2025 NEW SITE DEVELOPMENT

SITE NAME: WHITEWATER SOUTH
SITE NUMBER: 765538
STRUCTURE TYPE: WATER TANK
FUZE PROJECT ID: 15104581
MDG ID: 5000916433

THESE PLANS ARE BASED ON RFDS LAST MODIFIED 03/19/2024, GENERAL CONTRACTOR TO VERIFY AND INCORPORATE MOST RECENT VERSION OF RFDS WITH VERIZON PRIOR TO CONSTRUCTION.

PREPARED FOR:

CHICAGO SMSA LIMITED PARTNERSHIP
D/B/A VERIZON WIRELESS
1701 GOLF ROAD
TOWER 2, SUITE 400
ROLLING MEADOWS, IL 60008

PROJECT INFORMATION

SITE NAME: WHITEWATER SOUTH
SITE NUMBER: 765538
911 ADDRESS: 797 INDIAN MOUND PARKWAY
WHITEWATER, WI 53190
LATITUDE: 42.821264° / 42° 49' 16.55" N
LONGITUDE: -88.762231° / 88° 45' 44.03" W
GROUND ELEVATION: 872.14' AMSL
JURISDICTION: CITY OF WHITEWATER
STRUCTURE TYPE: WATER TANK

DRIVING DIRECTIONS

FROM APPLETON INTERNATIONAL AIRPORT:

GET ON I-41/US-41 S IN MENASHA FROM COUNTY HWY CB/COUNTY RD CB AND W PROSPECT AVE/FOLLOW I-41/US-41 S TO WI-26 S/WI-26 TRUNK S/I-41 ALT IN OSHKOSH. TAKE EXIT 113 FROM I-41/US-41 S/GET ON US-151 S/WI-26 S IN WAUPUN/MERGE ONTO US-151 S/WI-26 S/FOLLOW CO RD A TO WI-26 S/WI-26 TRUNK S IN CLYMAN/FOLLOW WI-26 S/WI-26 TRUNK S AND US-12 E TO COUNTY HWY S IN WHITEWATER/DRIVE TO INDIAN MOUND PKWY IN WHITEWATER/ARRIVE ON SITE.

VICINITY MAP

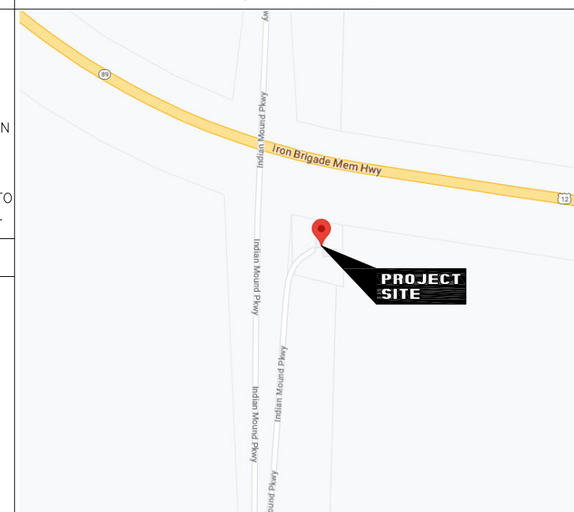

AERIAL MAP

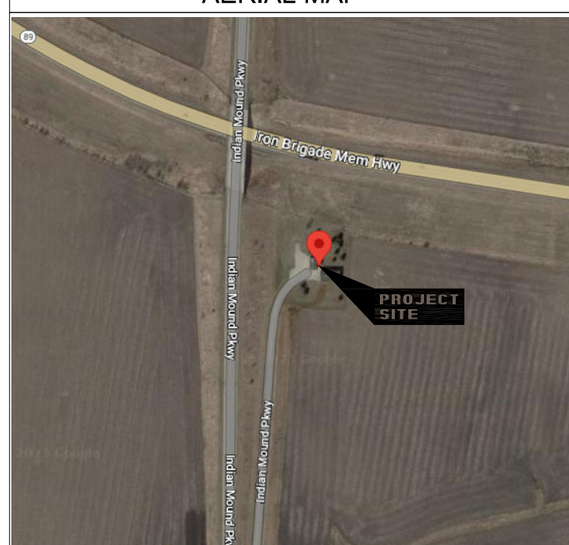

SHEET INDEX

SITE GENERAL ARRANGEMENT PLANS		REVISION
T1.0	TITLE SHEET	0
N1.0	GENERAL SPECIFICATIONS	0
N1.1	GENERAL SPECIFICATIONS	0
	SITE SURVEY (BY OTHERS, PENDING)	
C1.0	SITE GRADING AND EROSION CONTROL PLAN	0
A0.0	OVERALL SITE PLAN	0
A1.0	PROPOSED COMPOUND PLAN	0
A1.1	ENLARGED EQUIPMENT PLAN	0
A2.0	TOWER ELEVATION	0
A2.1	PROPOSED ANTENNA PLAN	0
A2.2	ANTENNA MOUNT AND INSTALLATION DETAILS	0
A2.3	TOWER BELL SECTION & TOWER BELL HYBRID ROUTING	0
A3.0	RF SUMMARY	0
A3.1	RF SUMMARY	0
A3.2	ANTENNA PLUMBING DIAGRAM	0
A4.0	ANTENNA DETAILS	0
A4.1	EQUIPMENT DETAILS	0
A4.2	EQUIPMENT DETAILS	0
A4.3	ICE BRIDGE AND GPS DETAILS	0
A4.4	GROUND EQUIPMENT SPECIFICATIONS	0
A4.5	GROUND EQUIPMENT SPECIFICATIONS	0
A4.6	GROUND EQUIPMENT SPECIFICATIONS	0
A4.7	EQUIPMENT PAD ELEVATIONS	0
A4.8	EQUIPMENT PAD FOUNDATION DETAILS	0
A4.9	GENERATOR SPECIFICATIONS	0
A4.10	GENERATOR PAD FOUNDATION DETAILS	0
A4.11	FENCE DETAILS	0
A4.12	SIGNAGE DETAILS	0
A4.13	SITE DETAILS	0
E1.0	COMPOUND GROUNDING PLAN	0
E1.1	OVERALL UTILITY PLAN	0
E1.2	UTILITY PLAN	0
E1.3	UTILITY DETAILS	0
E2.0	GROUNDING DETAILS	0
E2.1	GROUNDING DETAILS	0
E2.2	GROUNDING DETAILS	0
E2.3	ELECTRICAL DETAILS	0
	RFE REPORT – PENDING	

NOTE: DRAWING SCALES ARE FOR 11"X17" & 22"X34" SHEETS UNLESS OTHERWISE NOTED.

SCOPE OF WORK

THE WIRELESS COMMUNICATIONS FACILITY IS NOT INTENDED FOR HUMAN OCCUPANCY

1. INSTALLATION OF (3) NEW KRE105281/1 PANEL ANTENNAS/RADIO
2. INSTALLATION OF (3) NEW AIR 6419 PANEL ANTENNAS/RADIO
3. INSTALLATION OF (6) NEW NHH-65C-R2B PANEL ANTENNAS
4. INSTALLATION OF (3) NEW HYBRID CABLES
5. INSTALLATION OF (3) NEW SURGE PROTECTORS
6. INSTALLATION OF (6) NEW REMOTE RADIO UNITS
7. INSTALLATION OF (3) NEW ALARM
8. INSTALLATION OF 11'-0"X4'-0" CONCRETE PAD WITH CABINETS
9. INSTALLATION OF NEW EXTERIOR DIESEL GENERATOR

APPLICABLE CODES & STANDARDS

ALL WORK AND MATERIALS SHALL BE PERFORMED AND INSTALLED IN ACCORDANCE WITH THE CURRENT EDITIONS OF THE FOLLOWING CODES AS ADOPTED WITH ANY LOCAL AMENDMENTS BY THE LOCAL GOVERNING AUTHORITIES:

- 2015 WISCONSIN BUILDING CODE
- 2017 WISCONSIN ELECTRICAL CODE
- 2015 WISCONSIN FIRE CODE
- 2015 WISCONSIN FUEL GAS CODE
- 2015 WISCONSIN MECHANICAL CODE
- 2015 WISCONSIN ENERGY CONSERVATION CODE

FOR ANY CONFLICTS BETWEEN SECTIONS OF LISTED CODES AND STANDARDS, THE MOST RESTRICTIVE REQUIREMENT SHALL GOVERN.

811 Know what's below. Call before you dig.

CONTACTS

APPLICANT:
CHICAGO SMSA LIMITED PARTNERSHIP
D/B/A VERIZON WIRELESS
1701 GOLF ROAD
TOWER 2, SUITE 400
ROLLING MEADOWS, IL 60008
CONTACT: OCTAVIO HERRERA
EMAIL: Octavio.herrera.verizonwireless.com
PHONE: 847-619-4142

PROPERTY OWNER:
CITY OF WHITEWATER
312 WHITEWATER STREET
WHITEWATER, WI 53190
CONTACT: BRAD MARQUARDT
EMAIL: bmarquardt@whitewater-wi.gov
PHONE: 262-473-0139

ARCHITECT/ENGINEER:
MOUNTAIN LTD. ENGINEERING
515 N. STREET FLOOR 14
CHICAGO, IL 60654
CONTACT: LUIS MENDOZA
PHONE: (949) 338-6143
EMAIL: luis.mendoza@mountainltd.com

FIBER COMPANY:
TO BE DETERMINED

POWER COMPANY:
WE ENERGIES
800-972-8856

SITE NAME:
WHITEWATER SOUTH
SITE NUMBER:
765538
SITE ADDRESS:
797 INDIAN MOUND PARKWAY
WHITEWATER, WI 53190
WALWORTH COUNTY

STAMP:

WISCONSIN
LUIS MENDOZA
E-49916
LADERA RANCH
CALIFORNIA
PROFESSIONAL ENGINEER
05/08/24

MOUNTAIN, LTD. ENGINEERING

DRAWN BY:	DP
APPROVED BY:	LM
DATE DRAWN:	04/30/24

REVISION

NO	DESCRIPTION	BY	DATE
A	ISSUED FOR REVIEW	DP	05/06/24
0	ISSUED FOR CONSTRUCTION	DD	05/08/24

SHEET TITLE:
TITLE SHEET

SHEET NUMBER:
T1.0

GENERAL

THE CONSTRUCTION DRAWINGS AND SPECIFICATIONS ARE INTERRELATED WHEN PERFORMING THE WORK. EACH CONTRACTOR MUST REFER TO ALL DRAWINGS. COORDINATION IS THE RESPONSIBILITY OF THE GENERAL CONTRACTOR.

DIVISION 1: GENERAL REQUIREMENTS

SECTION 01700 – PROJECT CLOSEOUT

PART 1 – GENERAL

1. OBTAIN AND SUBMIT RELEASES ENABLING THE OWNER UNRESTRICTED USE OF THE WORK AND ACCESS TO SERVICES AND UTILITIES. INCLUDE OCCUPANCY PERMITS, OPERATING CERTIFICATES, AND SIMILAR RELEASES.

2. SUBMIT RECORD DRAWINGS, DAMAGE, OR SETTLEMENT SURVEY, PROPERTY SURVEY, AND SIMILAR FINAL RECORD INFORMATION.

3. COMPLETE FINAL CLEAN–UP REQUIREMENTS, INCLUDING TOUCH–UP PAINTING. TOUCH–UP AND OTHERWISE REPAIR AND RESTORED MARRED EXPOSED FINISHES.

PART 2 – FINAL CLEANING/PROJECT CLOSEOUT

1. COMPLETE THE FOLLOWING OPERATIONS BEFORE REQUESTING INSPECTION FOR CERTIFICATE OF COMPLETION:

   A. CLEAN THE PROJECT SITE, YARD AND GROUNDS IN AREAS DISTURBED BY CONSTRUCTION ACTIVITIES, INCLUDING LANDSCAPE DEVELOPMENT, AREAS OF RUBBISH, WASTE MATERIALS, LITTER AND FOREIGN SUBSTANCES. SWEEP PAVED AREAS BROOM CLEAN. REMOVE PETRO–CHEMICAL SPILLS, STAINS AND OTHER FOREIGN DEPOSITS. RAKE GROUND THAT ARE NEITHER PLANTED NOR PAVED TO A SMOOTH, EVEN–TEXTURED SURFACE.

   B. REMOVE TOOLS, CONSTRUCTION EQUIPMENT, MACHINERY, AND SURPLUS MATERIAL FROM THE SITE.

   C. REMOVE SNOW AND ICE TO PROVIDE SAFE ACCESS TO THE SITE AND EQUIPMENT BUILDING.

   D. CLEAN EXPOSED EXTERIOR AND INTERIOR HARD–SURFACED FINISHES TO A DIRT–FREE CONDITION, FREE OF STAINS, FILMS AND SIMILAR FOREIGN SUBSTANCES. AVOID DISTURBING NATURAL WEATHERING OF EXTERIOR SURFACES.

   E. REMOVE DEBRIS FROM LIMITED ACCESS SPACES, INCLUDING ROOFS, EQUIPMENT BUILDING, MANHOLES AND SIMILAR SPACES.

   F. REMOVE LABELS THAT ARE NOT PERMANENT LABELS.

   G. TOUCH–UP AND OTHERWISE REPAIR AND RESTORE MARRED EXPOSED FINISHES AND SURFACES. REPLACE FINISHES AND SURFACES THAT CAN NOT BE SATISFACTORILY BE REPAIRED OR RESTORED, OR THAT SHOW EVIDENCE OF REPAIR OR RESTORATION. DO NOT PAINT OVER "UL" AND SIMILAR LABELS, INCLUDING ELECTRICAL NAME PLATES.

   H. LEAVE THE PROJECT CLEAN AND READY FOR OCCUPANCY.

   I. DUST OFF ALL EQUIPMENT, INCLUDING BATTERY PACKS, WITHIN EQUIPMENT BUILDING.

   J. GENERAL CONTRACTOR TO CLEAN AND APPLY STATIC–FREE WAX TO THE FLOORS ONCE FINAL SHELTER EQUIPMENT AND ACCESSORIES ARE COMPLETED.

2. REMOVE OF PROTECTION

   REMOVE TEMPORARY PROTECTION AND FACILITIES INSTALLED DURING CONSTRUCTION TO PROTECT PREVIOUSLY COMPLETED INSTALLATIONS DURING THE REMAINDER OF THE CONSTRUCTION PERIOD.

DIVISION 2: SITE WORK

SECTION 02200 – EARTHWORK AND DRAINAGE

PART 1 – GENERAL

1. WORK INCLUDED – SEE SITE PLAN

2. DESCRIPTIONS

   ACCESS DRIVE WITH TURN–AROUND AREA, LEASE AREA, AND, IF APPLICABLE, UNDERGROUND UTILITY EASEMENTS ARE TO BE CONSTRUCTED TO PROVIDE A WELL–DRAINED, EASILY MAINTAINED, EVEN SURFACE FOR MATERIAL AND EQUIPMENT DELIVERIES AND MAINTENANCE PERSONNEL ACCESS.

3. QUALITY ASSURANCE

   A. APPLY SOIL STERILIZER IN ACCORDANCE WITH MANUFACTURER'S RECOMMENDATIONS (AS NEEDED).
   B. APPLY AND MAINTAIN GRASS SEED AS RECOMMENDED BY THE SEED PRODUCER (AS NEEDED).
   C. PLACE AND MAINTAIN VEGETATION LANDSCAPING, IF INCLUDED WITHIN THE CONTRACT, AS RECOMMENDED BY NURSERY INDUSTRY STANDARDS.

4. SEQUENCING

   A. CONFIRM SURVEY STAKES AND SET ELEVATIONS STAKES PRIOR TO ANY CONSTRUCTION.
   B. COMPLETELY GRUB THE ACCESS DRIVE WITH TURN–AROUND, UNDERGROUND UTILITY EASEMENTS (IF APPLICABLE), AND LEASE AREA PRIOR TO FOUNDATION CONSTRUCTION, PLACEMENT OF BACKFILL AND SUB–BASE MATERIAL.
   C. CONSTRUCT TEMPORARY CONSTRUCTION AREA ALONG ACCESS DRIVE.
   D. BRING THE LEASE AREA AND ACCESS DRIVE WITH TURN–AROUND TO BASE COURSE ELEVATION PRIOR TO INSTALLING FOUNDATION.
   E. APPLY SOIL STERILIZER PRIOR TO PLACING BASE MATERIALS SUCH THAT THE STERILIZER ONLY COMES IN CONTACT WITH PROPOSED GRAVEL SURFACES.
   F. GRADE, SEED, FERTILIZE, AND MULCH ALL AREAS DISTURBED BY CONSTRUCTION (INCLUDING UNDERGROUND UTILITY EASEMENTS) IMMEDIATELY AFTER BRINGING LEASE AND ACCESS DRIVE WITH TURN–AROUND TO BASE COURSE ELEVATION. WATER TO ENSURE GROWTH.
   G. REMOVE GRAVEL FROM TEMPORARY CONSTRUCTION ZONE TO AN AUTHORIZED AREA OR AS DIRECTED BY THE PROJECT MANAGER.
   H. AFTER APPLICATIONS OF FINAL SURFACES, APPLY SOIL STERILIZER TO STONE SURFACES.

5. SUBMITTALS

   A. BEFORE CONSTRUCTION
      IF LANDSCAPING IS APPLICABLE TO THE CONTRACT, SUBMIT TWO (2) COPIES OF THE LANDSCAPE PLAN UNDER NURSERY LETTERHEAD. IF LANDSCAPE ALLOWANCE WAS INCLUDED IN THE CONTRACT, PROVIDE AN ITEMIZED LISTING OF PROPOSED COSTS ON NURSERY LETTERHEAD. REFER TO PLANS FOR LANDSCAPING REQUIREMENTS.

   B. PLACE FILL OR STONE IN SIX (6) INCH MAXIMUM LIFTS, AND COMPACT BEFORE PLACING NEXT LIFT.

   C. AFTER CONSTRUCTION
      1. MANUFACTURER'S DESCRIPTION OF PRODUCT AND WARRANTY STATEMENT ON SOIL STERILIZED.
      2. MANUFACTURER'S DESCRIPTION OF PRODUCT ON GRASS SEED AND FERTILIZER.
      3. LANDSCAPING WARRANTY STATEMENT.

6. WARRANTY

   A. IN ADDITION TO THE WARRANTY ON ALL CONSTRUCTION COVERED IN THE CONTRACT DOCUMENTS, THE CONTRACTOR SHALL REPAIR ALL DAMAGE AND RESTORE AREA AS CLOSE TO ORIGINAL CONDITION AS POSSIBLE AT SITE AND SURROUNDINGS.
   B. SOIL STERILIZATION APPLICATION TO GUARANTEE VEGETATION FREE ROAD AND SITE AREAS FOR ONE YEAR FROM THE DATE OF FINAL INSPECTION.
   C. DISTURBED AREAS WILL REFLECT GROWTH OF NEW GRASS PRIOR TO FINAL INSPECTION.
   D. LANDSCAPING, IF INCLUDED WITHIN THE SCOPE OF THE CONTRACT, WILL BE GUARANTEED FOR ONE YEAR FROM THE DATE OF FINAL INSPECTION.

DIVISION 2: SITE WORK (CONTINUED)

SECTION 02200 – EARTHWORK AND DRAINAGE (CONTINUED)

PART 2 – PRODUCTS

1. MATERIALS

   A. SOIL STERILIZER SHALL BE AN EPA REGISTERED, PRE–EMERGENCE LIQUID:

TOTAL KILL PRODUCT 910 EPA 10292–7	PHASAR CORPORATION P.O. BOX 5123 DEARBORN, MI 48128 313.563.8000
AMBUSH HERBICIDE EPA REGISTERED	FRAMAR INDUSTRIAL PRODUCTS 1435 MORRIS AVENUE UNION, NJ 07083 800.526.4924

   B. ROAD AND SITE MATERIALS SHALL CONFORM TO DOT SPECIFICATIONS (UNLESS OTHERWISE NOTE). ACCEPTABLE SELECT FILL SHALL BE IN ACCORDANCE WITH STATE DEPARTMENT OF HIGHWAY AND TRANSPORTATION STANDARD SPECIFICATIONS.

   C. SOIL STABILIZED FABRIC SHALL BE MIRAFI–500X.

PART 3 – EXECUTION

1. PREPARATION

   A. CLEAR TREES, BRUSH AND DEBRIS FROM LEASE AREA, ACCESS DRIVE WITH TURN–AROUND, AND UNDERGROUND UTILITY EASEMENTS AS REQUIRED FOR CONSTRUCTION.
   B. PRIOR TO OTHER EXCAVATION AND CONSTRUCTION, GRUB ORGANIC MATERIAL TO A MINIMUM OF SIX (6) INCHES BELOW GRADE.
   C. UNLESS OTHERWISE INSTRUCTED BY LESSEE, TRANSPORT ALL REMOVED TREES, BRUSH AND DEBRIS FROM THE PROPERTY TO AN AUTHORIZED LANDFILL.
   D. PRIOR TO PLACEMENT OF FILL OR BASE MATERIALS, ROLL THE SOIL.
   E. WHERE UNSTABLE SOIL CONDITIONS ARE ENCOUNTERED, LINE THE AREA WITH A STABILIZED MAT PRIOR TO PLACEMENT OF FILL OR BASE MATERIAL.
   F. PRIOR TO PLACEMENT OF FILL OR BASE MATERIALS. REMOVE SOFT SPOTS, PLACE SELECT FILL, AND COMPACT TO 95% MODIFIED PROCTOR.

2. INSTALLATION

   A. GRADE OR FILL THE LEASE AREA AND ACCESS DRIVE WITH TURN–AROUND AS REQUIRED IN ORDER THAT UPON DISTRIBUTION OF SPOILS RESULTING FROM EXCAVATIONS, THE RESULTING GRADE WILL CORRESPOND WITH SAID SUB–BASE COURSE. ELEVATIONS ARE TO BE CALCULATED FROM BENCHMARK, FINISHED GRADES, OR INDICATED SLOPES.
   B. CLEAR EXCESS SPOILS, IF ANY, FROM JOB SITE AND DO NOT SPREAD BEYOND THE LIMITS OF PROJECT AREA UNLESS AUTHORIZED BY PROJECT MANAGER AND AGREED TO BY LANDOWNER.
   C. BRING THE ACCESS DRIVE WITH TURN–AROUND TO BASE COURSE ELEVATION TO FACILITATE CONSTRUCTION AND OBSERVATION DURING CONSTRUCTION OF THE SITE.
   D. AVOID CREATING DEPRESSIONS WHERE WATER MAY POND.
   E. THE CONTRACT SHALL INCLUDE GRADING, BANKING, AND DITCHING, UNLESS OTHERWISE NOTED.
   F. WHEN IMPROVING AN EXISTING ACCESS DRIVE, GRADE THE EXISTING DRIVE TO REMOVE ANY ORGANIC MATTER AND SMOOTH THE SURFACE BEFORE PLACING FILL OR STONE.
   G. THE TOP SURFACE COURSE SHALL EXTEND A MINIMUM OF ONE (1) FOOT BEYOND THE SITE FENCE, UNLESS OTHERWISE NOTED, AND SHALL COVER THE AREA AS INDICATED.
   H. NO SLOPES ARE TO BE GREATER THAN 3:1.
   I. APPLY RIP–RAP TO THE SIDES OF DITCHES AND DRAINAGE SWALES WHERE INDICATED ON THE DRAWINGS.
   J. RIP–RAP ENTIRE DITCH FOR SIX (6) FEET IN ALL DIRECTIONS AT CULVERT OPENINGS (WHEN APPLICABLE)
   K. APPLY SEED, FERTILIZER, AND STRAW COVER TO ALL OTHER DISTURBED AREAS, DITCHES, AND DRAINAGE SWALES, NOT OTHERWISE RIP–RAPPED.
   L. UNDER NO CIRCUMSTANCES WILL DITCHES, SWALES, OR CULVERTS BE PLACED SO THAT THEY DIRECT WATER TOWARDS, OR PERMIT STANDING WATER IMMEDIATELY ADJACENT TO SHELTER OR EQUIPMENT. IF DESIGNS OR ELEVATIONS ARE IN CONFLICT WITH THIS, ADVISE CONSTRUCTION MANAGER IMMEDIATELY.

PREPARED FOR:

verizon

CHICAGO SMSA LIMITED PARTNERSHIP
D/B/A VERIZON WIRELESS
1701 GOLF ROAD
TOWER 2, SUITE 400
ROLLING MEADOWS, IL 60008

SITE NAME:
WHITEWATER SOUTH
SITE NUMBER:
765538

SITE ADDRESS:
797 INDIAN MOUND PARKWAY
WHITEWATER, WI 53190
WALWORTH COUNTY

STAMP:

WISCONSIN
LUIS MENDOZA
E-49916
LADERA RANCH
CALIFORNIA
PROFESSIONAL ENGINEER

05/08/24

MOUNTAIN, LTD.
ENGINEERING

DRAWN BY:	DP
APPROVED BY:	LM
DATE DRAWN:	04/30/24

REVISION

NO	DESCRIPTION	BY	DATE
A	ISSUED FOR REVIEW	DP	05/06/24
0	ISSUED FOR CONSTRUCTION	DD	05/08/24

SHEET TITLE:
GENERAL SPECIFICATIONS

SHEET NUMBER:
N1.0

DIVISION 2: SITE WORK (CONTINUED)

SECTION 02200 – EARTHWORK AND DRAINAGE (CONTINUED)

PART 2 – PRODUCTS (CONTINUED)

2. INSTALLATION (CONTINUED)

   M. IN DITCHES WITH SLOPES GREATER THAN 10%, MOUND DIVERSIONARY HEADWALLS IN THE DITCH AT AN ANGLE NO GREATER THAN 60° OFF THE DITCH LINE, RIP RAP THE UPSTREAM SIDE OF THE HEADWALL AS WELL AS DITCH FOR SIX (6) FEET ABOVE THE CULVERT ENTRANCE.

   N. APPLY SEED AND FERTILIZER TO SURFACE CONDITIONS WHICH WILL ENCOURAGE ROOTING, RAKE AREAS TO BE SEEDED TO EVEN THE SURFACE AND LOOSEN THE SOIL.

   O. SOW SEED IN TWO DIRECTIONS IN TWICE THE QUANTITY RECOMMENDED BY THE SEED PRODUCER.

   P. ENSURE GROWTH OF SEEDED AND LANDSCAPED AREAS BY WATERING UP TO THE POINT OF RELEASE FROM THE CONTRACT. CONTINUE TO REWORK THE BARE AREAS UNTIL COMPLETE COVERAGE IS OBTAINED.

3. FIELD QUALITY CONTROL

   COMPACT SOILS TO MAXIMUM DENSITY IN ACCORDANCE WITH ASTM D–1557. AREAS OF SETTLEMENT WILL BE EXCAVATED AND REFILLED AT CONTRACTOR'S EXPENSE. INDICATE PERCENTAGE OF COMPACTION ACHIEVED ON AS–BUILT DRAWINGS.

4. PROTECTION

   A. PROTECT SEEDED AREAS FROM EROSION BY SPREADING STRAW TO A UNIFORM LOOSE DEPTH OF 1–2 INCHES, STAKE AND TIE DOWN AS REQUIRED. USE OF EROSION CONTROL MESH OR MULCH NET WILL BE AN ACCEPTABLE ALTERNATE.

   B. ALL TREES PLACED IN CONJUNCTION WITH A LANDSCAPE CONTRACT WILL BE WRAPPED, TIED WITH HOSE PROTECTED WIRE, AND SECURED TO 2" x 2" x 4'–0" WOODEN STAKES EXTENDING TWO–FEET INTO GROUND ON FOUR SIDES OF THE TREE.

   C. PROTECT ALL EXPOSED AREAS AGAINST WASHOUTS AND SOIL EROSION. ALL EROSION CONTROL METHODS SHALL CONFORM TO APPLICABLE BUILDING CODE REQUIREMENTS.

DIVISION 16: UTILITY

SECTION 16050 – BASIC UTILITY MATERIALS AND METHODS

1. CONTRACTOR SHALL REVIEW THE CONTRACT DOCUMENTS PRIOR TO ORDERING THE UTILITY EQUIPMENT AND STARTING THE ACTUAL CONSTRUCTION. CONTRACTOR SHALL ISSUE A WRITTEN NOTICE OF ALL FINDINGS TO THE ARCHITECT/ENGINEER LISTING ANY DISCREPANCIES OR CONFLICTING INFORMATION.

2. UTILITY PLANS, DETAILS AND DIAGRAMS ARE DIAGRAMMATIC ONLY. VERIFY EXACT LOCATIONS AND MOUNTING HEIGHTS OF UTILITY EQUIPMENT WITH OWNER PRIOR TO INSTALLATION.

3. EACH CONDUCTOR OF EVERY SYSTEM SHALL BE PERMANENTLY TAGGED IN EACH PANELBOARD, PULLBOX, JUNCTION BOX, SWITCH BOX, ETC. THE TYPE OF TAGGING METHODS SHALL BE COMPLIANCE WITH OCCUPATIONAL SAFETY AND HEALTH ADMINISTRATION (O.S.H.A.).

4. ALL MATERIALS AND EQUIPMENT SHALL BE NEW AND IN GOOD WORKING CONDITION WHEN INSTALLED AND SHALL BE OF THE BEST GRADE AND OF THE SAME MANUFACTURER THROUGHOUT FOR EACH CLASS OR GROUP OF EQUIPMENT. MATERIALS SHALL BE LISTED "J" WHERE APPLICABLE. MATERIALS SHALL MEET WITH APPROVAL OF ALL GOVERNING BODIES HAVING JURISDICTION. MATERIALS SHALL BE MANUFACTURED IN ACCORDANCE WITH APPLICABLE STANDARDS ESTABLISHED BY ANSI, NEMA, NBFU AND "UL" LISTED.

5. ALL CONDUIT SHALL HAVE A PULL CORD.

6. PROVIDE PROJECT MANAGER WITH ONE SET OF COMPLETE UTILITY "AS INSTALLED" DRAWINGS AT THE COMPLETION OF THE JOB, SHOWING ACTUAL DIMENSIONS, ROUTINGS, AND CIRCUITS.

PREPARED FOR:

verizon

CHICAGO SMSA LIMITED PARTNERSHIP
D/B/A VERIZON WIRELESS
1701 GOLF ROAD
TOWER 2, SUITE 400
ROLLING MEADOWS, IL 60008

SITE NAME:
WHITEWATER SOUTH
SITE NUMBER:
765538

SITE ADDRESS:
797 INDIAN MOUND PARKWAY
WHITEWATER, WI 53190
WALWORTH COUNTY

STAMP:

WISCONSIN
LUIS MENDOZA
E-49916
LADERA RANCH
CALIFORNIA
PROFESSIONAL ENGINEER

05/08/24

MOUNTAIN, LTD.
ENGINEERING

DRAWN BY:	DP
APPROVED BY:	LM
DATE DRAWN:	04/30/24

REVISION

NO	DESCRIPTION	BY	DATE
A	ISSUED FOR REVIEW	DP	05/06/24
0	ISSUED FOR CONSTRUCTION	DD	05/08/24

SHEET TITLE:
GENERAL SPECIFICATIONS

SHEET NUMBER:
N1.1

EROSION CONTROL CONSTRUCTION SEQUENCE:

1. THE CONTRACTOR SHALL DESIGNATE AN ESC COORDINATOR FOR THE SITE AND COMMUNICATE TO THE OWNER AND ENGINEER.
2. SOIL EROSION AND SEDIMENT CONTROL MEASURES SHALL BE PROVIDED, AND SHALL INCLUDE SILT FENCES AT DOWNSLOPE PERIMETERS OF THE DISTURBED AREA AND A STABILIZED CONSTRUCTION ENTRANCE, APPROXIMATELY TWELVE (12') FEET WIDE AND TWENTY (20') LONG, CONSISTING OF A SIX (6") INCH THICK STONE APRON (2" AGGREGATE – ASTM SIZE No. 2).
3. COMMENCE WITH TREE REMOVAL AND GRADING ACTIVITIES.
4. INSTALL ADDITIONAL EROSION CONTROL MEASURES AFTER GRADING BEGINS AS REQUIRED.
5. SEED ALL MULCH DENUDED AREAS WITH 7 DAYS AFTER ANY PHASE OF GRADING, ALSO COVER ALL EXPOSED AREA BEFORE MAJOR STORM EVENTS.
6. MAINTAIN SOIL EROSION CONTROL MEASURES UNTIL PERMANENT GROUND COVER AND/OR STAND OF GRASS IS ESTABLISHED.
7. REQUEST FINAL APPROVAL FROM OWNER.
8. REMOVE SOIL EROSION CONTROL MEASURES AND STABILIZE THE AREAS.

EROSION CONTROL AND DRAINAGE NOTES:

1. THE CONTRACTOR SHALL COMPLY WITH ALL APPLICABLE RULES AND REGULATIONS FOR EROSION AND SEDIMENT CONTROL FOR THE AGENCY(IES) HAVING JURISDICTION OVER CLEARING AND GRADING OPERATIONS. AS A MINIMUM, ALL WORK SHALL COMPLY WITH THE LATEST PROVISIONS OF THE INTERNATIONAL BUILDING CODE. UTILIZE BEST MANAGEMENT PRACTICES (BMP) PRESCRIBED BY IBC TO PREVENT EROSION OF ON–SITE SOILS AND TRANSPORT OF THESE SOILS TO DOWNSTREAM PROPERTIES OR WATER BODIES. SPECIFIC BMP'S TO BE EMPLOYED INCLUDE, BUT ARE NOT LIMITED TO, A TEMPORARY CONSTRUCTION ENTRANCE, SILT FENCE AT THE BASE OF FILL SLOPES AND AROUND STOCKPILE AREA, CHECK DAMS IN THE FLOW LINE OF SWALES AND DITCHES, AND TEMPORARY AND PERMANENT SEEDING.
2. CONTRACTOR AND/OR DEVELOPER SHALL BE RESPONSIBLE FOR THE INSTALLATION AND MAINTENANCE OF EROSION AND SEDIMENTATION CONTROLS AS NECESSARY DURING CONSTRUCTION ACTIVITIES TO ENSURE THE PROTECTION OF ADJACENT PROPERTIES AND WATERWAYS. EXCEPT AS MAY BE REQUIRED TO INSTALL THE MEASURES, NO GRADING SHALL BE PERFORMED UNTIL THE TEMPORARY CONSTRUCTION ENTRANCE, SILT FENCE AND OTHER APPROPRIATE MEASURES ARE IN PLACE.
3. FOLLOWING INITIAL SOIL DISTURBANCE OR RE–DISTURBANCE, PERMANENT OR TEMPORARY STABILIZATION SHALL BE COMPLETED WITHIN:
   A. SEVEN CALENDAR DAYS OF THE SURFACING OF ALL PERIMETER DIKES, SWALES, DITCHES, PERIMETER SLOPES AND ALL SLOPES GREATER THAN 3 HORIZONTAL TO 1 VERTICAL (3:1); AND
   B. FOURTEEN DAYS OF ALL OTHER DISTURBED OR GRADED AREAS ON THE PROJECT SITE.
4. THE CONTRACTOR IS RESPONSIBLE FOR MONITORING DOWNSTREAM CONDITIONS THROUGHOUT THE CONSTRUCTION PERIOD AND CLEARING ANY DEBRIS AND SEDIMENT CAUSED BY CONSTRUCTION.
5. ALL EROSION CONTROL MEASURES WILL BE CHECKED PERIODICALLY, ESPECIALLY AFTER RAIN, AND ANY DEFICIENCIES NOTED SHALL BE PROMPTLY CORRECTED AND ANY DEFICIENCIES NOTED WILL BE CORRECTED. ADDITIONAL EROSION AND SEDIMENT CONTROL MEASURES WILL BE INSTALLED IF DEEMED NECESSARY AFTER ON–SITE INSPECTION.

NOTES:

1. THIS GRADING PLAN WAS PREPARED PRIOR TO RECEIPT OF TOWER FOUNDATION DESIGN AND GEOTECHNICAL REPORT. PROPOSED GRADES, ELEVATIONS AND CORRESPONDING SOIL COVER MAY REQUIRE FINAL ADJUSTMENT ONCE THE ABOVE NOTED DOCUMENTS ARE AVAILABLE. RECOMMENDATIONS IN THIS GRADING PLAN SHOULD NOT SUPERCEDE ANY REQUIREMENTS SPECIFIED IN THE FOUNDATION DESIGN.
2. NO VEHICULAR TRAFFIC OR SOIL DISTURBANCE TO OCCUR BEYOND SILT FENCE, CONTRACTOR TO INSTALL SILT FENCE BARRIER PRIOR TO ALL CONSTRUCTION ACTIVITIES AND MAINTAIN SILT FENCE THROUGHOUT THE LIFE OF THE PROJECT,
3. CONTRACTOR RESPONSIBLE FOR ALL REPAIR/REMEDIATION OF AREAS BEYOND SILT FENCE DUE TO CONSTRUCTION ACTIVITIES.

Know what's below. Call before you dig.

LEGEND

PROPOSED GROUND DRAINAGE FLOW DIRECTION ARROWS

DRAINAGE DIRECTION ARROW

0.00% GROUND SLOPE% WITH DIRECTION

SUMMIT DRAINAGE DIRECTIONS

EXISTING GROUND DRAINAGE FLOW DIRECTION

PROPOSED SPOT GRADES

0.00 PROPOSED ELEVATION

PROPOSED LINES

X PROPOSED SILT FENCE

PROPOSED GROUND RIDGE LINE

000 PROPOSED CONTOUR

000 EXISTING CONTOUR

EXISTING PROPERTY LINE

PROPOSED CULVERT & END SECTIONS

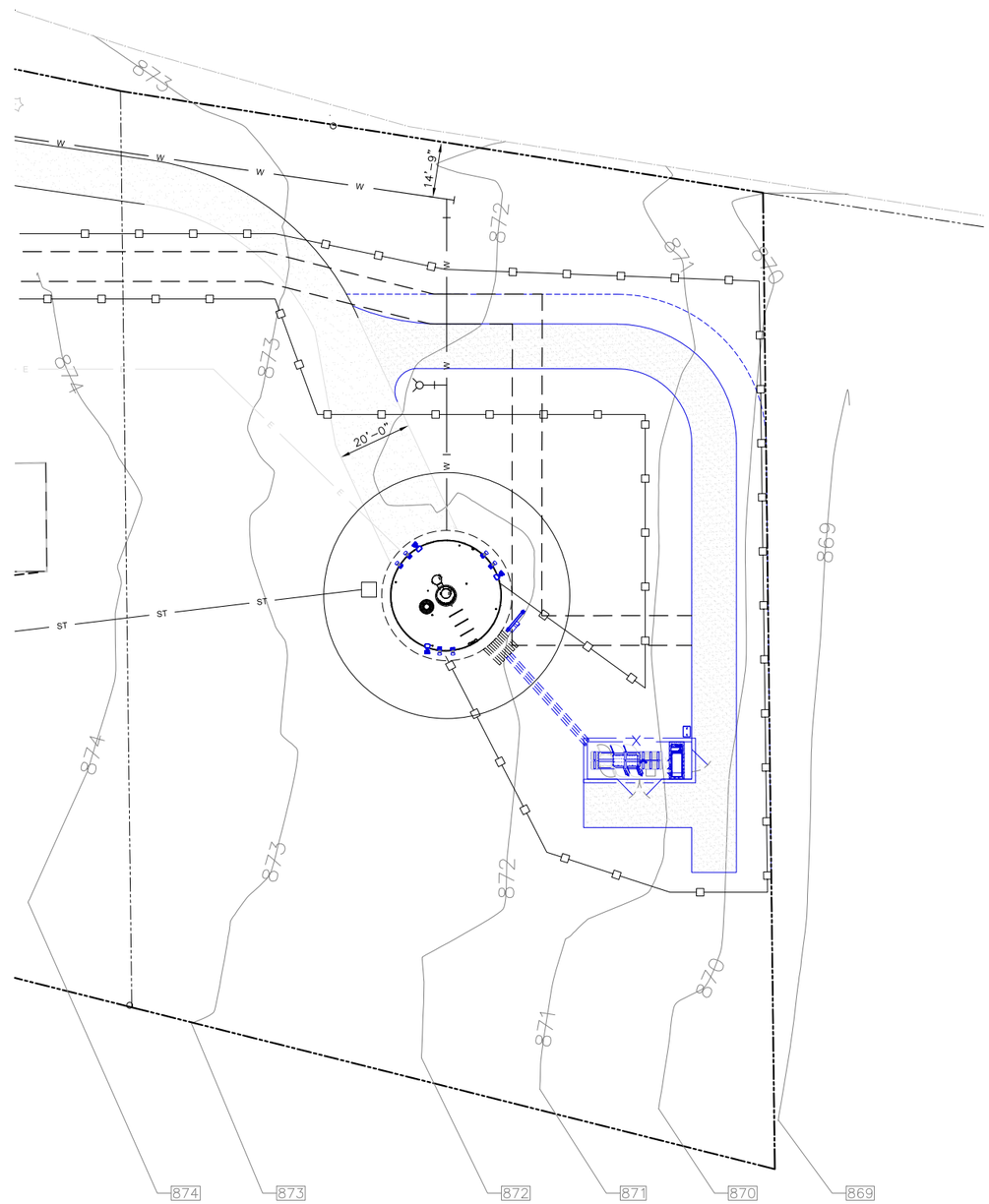

TRUE NORTH

1 SITE GRADING AND EROSION CONTROL PLAN

FULL SIZE PLOT SCALE: 1' = 20'
HALF SIZE PLOT SCALE: 1' = 40'

0 10' 20' 40'

PREPARED FOR:

verizon

CHICAGO SMSA LIMITED PARTNERSHIP
D/B/A VERIZON WIRELESS
1701 GOLF ROAD
TOWER 2, SUITE 400
ROLLING MEADOWS, IL 60008

SITE NAME:
WHITEWATER SOUTH
SITE NUMBER:
765538

SITE ADDRESS:
797 INDIAN MOUND PARKWAY
WHITEWATER, WI 53190
WALWORTH COUNTY

STAMP:

WISCONSIN PROFESSIONAL ENGINEER
LUIS MENDOZA
E-49916
LADERA RANCH
CALIFORNIA

05/08/24

MOUNTAIN, LTD. ENGINEERING

DRAWN BY:	DP
APPROVED BY:	LM
DATE DRAWN:	04/30/24

REVISION

NO	DESCRIPTION	BY	DATE
A	ISSUED FOR REVIEW	DP	05/06/24
0	ISSUED FOR CONSTRUCTION	DD	05/08/24

SHEET TITLE:
SITE GRADING AND EROSION CONTROL PLAN

SHEET NUMBER:
C1.0

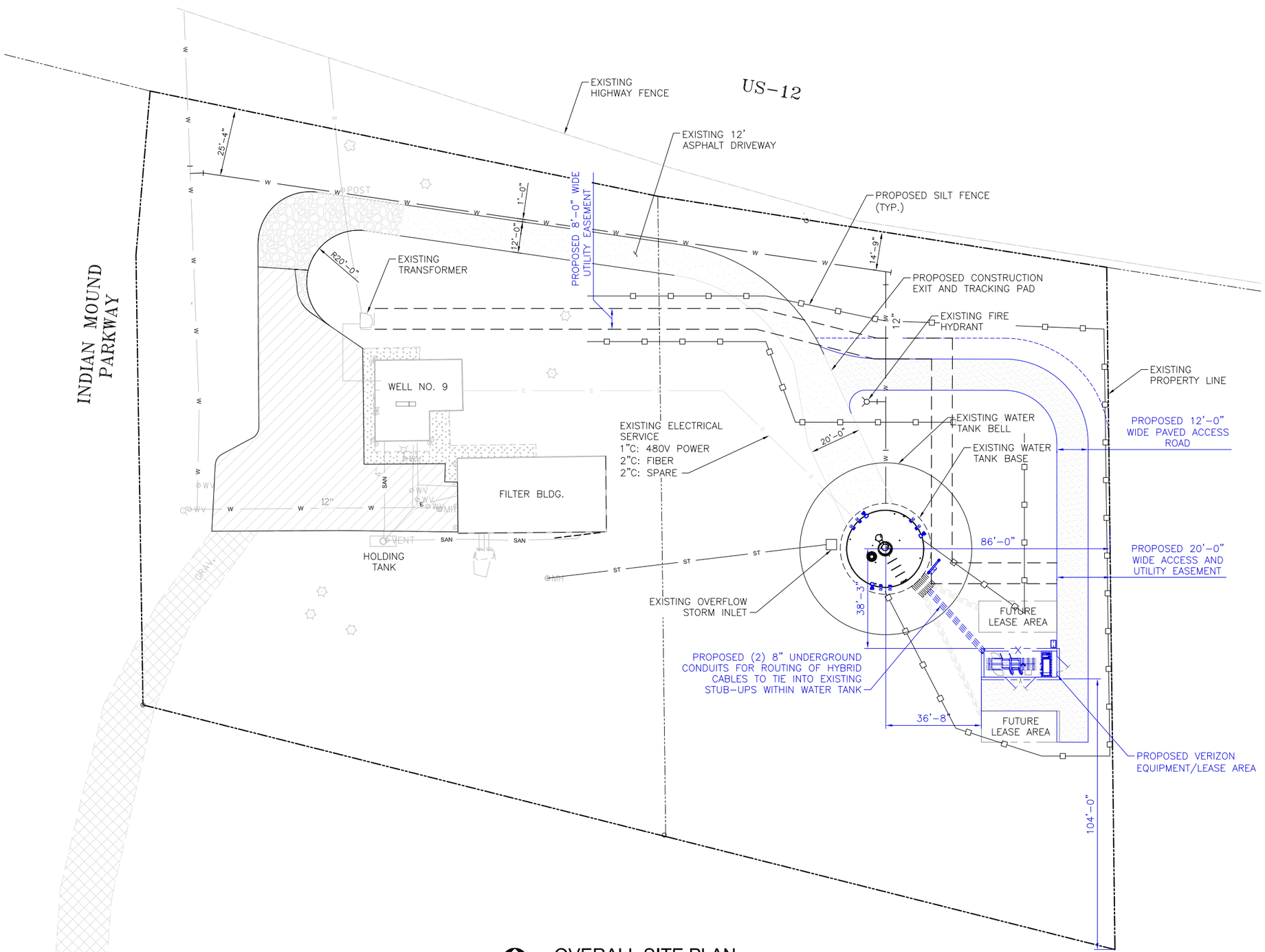

TRUE NORTH

1 OVERALL SITE PLAN

FULL SIZE PLOT SCALE: 1' = 20'
HALF SIZE PLOT SCALE: 1' = 40'

0 10' 20' 40'

PREPARED FOR:

verizon

CHICAGO SMSA LIMITED PARTNERSHIP
D/B/A VERIZON WIRELESS
1701 GOLF ROAD
TOWER 2, SUITE 400
ROLLING MEADOWS, IL 60008

SITE NAME:
WHITEWATER SOUTH
SITE NUMBER:
765538

SITE ADDRESS:
797 INDIAN MOUND PARKWAY
WHITEWATER, WI 53190
WALWORTH COUNTY

STAMP:

WISCONSIN
LUIS MENDOZA
E-49916
LADERA RANCH
CALIFORNIA
PROFESSIONAL ENGINEER

05/08/24

MOUNTAIN, LTD.
ENGINEERING

DRAWN BY:	DP
APPROVED BY:	LM
DATE DRAWN:	04/30/24

REVISION

NO	DESCRIPTION	BY	DATE
A	ISSUED FOR REVIEW	DP	05/06/24
0	ISSUED FOR CONSTRUCTION	DD	05/08/24

SHEET TITLE:
OVERALL SITE PLAN

SHEET NUMBER:
A0.0

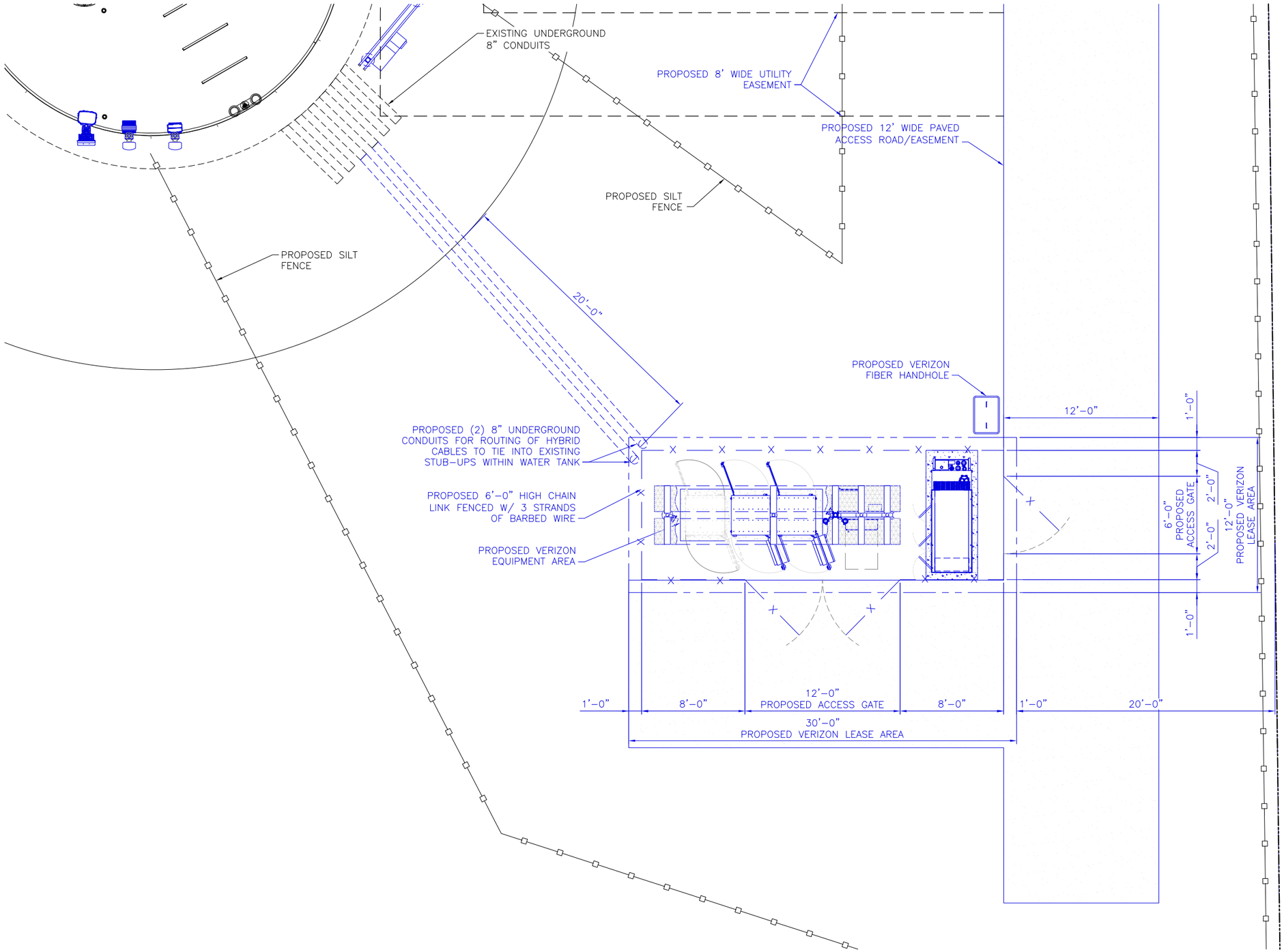

1 PROPOSED COMPOUND PLAN

FULL SIZE PLOT SCALE: 1/4" = 1'-0"
HALF SIZE PLOT SCALE: 1/8" = 1'-0"

0 2' 4' 8'

PREPARED FOR:

verizon

CHICAGO SMSA LIMITED PARTNERSHIP
D/B/A VERIZON WIRELESS
1701 GOLF ROAD
TOWER 2, SUITE 400
ROLLING MEADOWS, IL 60008

SITE NAME:
WHITEWATER SOUTH
SITE NUMBER:
765538

SITE ADDRESS:
797 INDIAN MOUND PARKWAY
WHITEWATER, WI 53190
WALWORTH COUNTY

STAMP:

WISCONSIN
LUIS MENDOZA
E-49916
LADERA RANCH
CALIFORNIA
PROFESSIONAL ENGINEER

05/08/24

MOUNTAIN, LTD.
ENGINEERING

DRAWN BY:	DP
APPROVED BY:	LM
DATE DRAWN:	04/30/24

REVISION

NO	DESCRIPTION	BY	DATE
A	ISSUED FOR REVIEW	DP	05/06/24
0	ISSUED FOR CONSTRUCTION	DD	05/08/24

SHEET TITLE:
PROPOSED COMPOUND PLAN

SHEET NUMBER:
A1.0

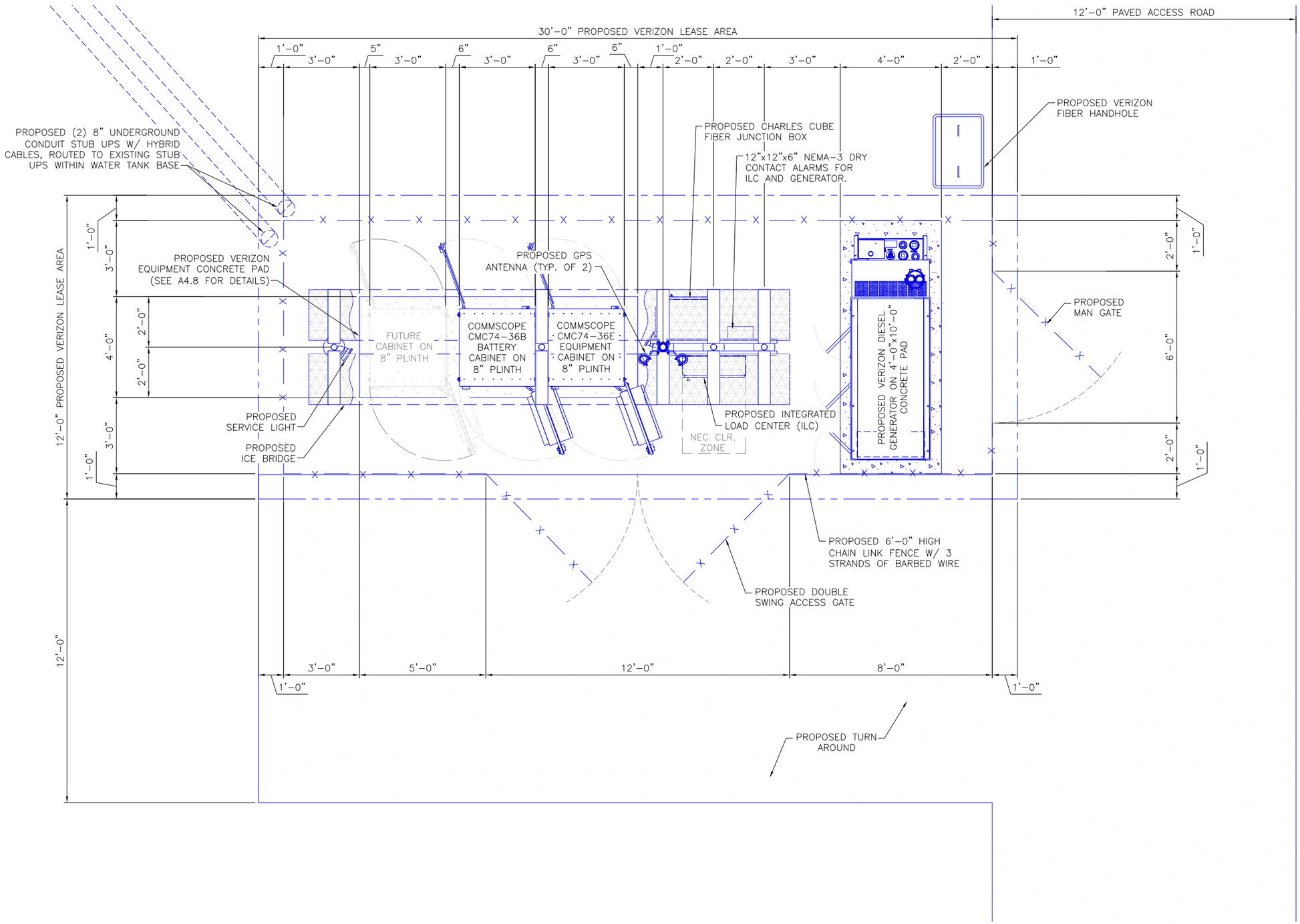

TRUE NORTH

1 ENLARGED EQUIPMENT PLAN

FULL SIZE PLOT SCALE: 1/2" = 1'-0"
HALF SIZE PLOT SCALE: 1/4" = 1'-0"

0 2' 4'

PREPARED FOR:

verizon

CHICAGO SMSA LIMITED PARTNERSHIP
D/B/A VERIZON WIRELESS
1701 GOLF ROAD
TOWER 2, SUITE 400
ROLLING MEADOWS, IL 60008

SITE NAME:
WHITEWATER SOUTH
SITE NUMBER:
765538

SITE ADDRESS:
797 INDIAN MOUND PARKWAY
WHITEWATER, WI 53190
WALWORTH COUNTY

STAMP:

WISCONSIN
LUIS MENDOZA
E-49916
LADERA RANCH
CALIFORNIA
PROFESSIONAL ENGINEER
05/08/24

MOUNTAIN, LTD.
ENGINEERING

DRAWN BY:	DP
APPROVED BY:	LM
DATE DRAWN:	04/30/24

REVISION

NO	DESCRIPTION	BY	DATE
A	ISSUED FOR REVIEW	DP	05/06/24
0	ISSUED FOR CONSTRUCTION	DD	05/08/24

SHEET TITLE:
ENLARGED EQUIPMENT PLAN

SHEET NUMBER:
A1.1

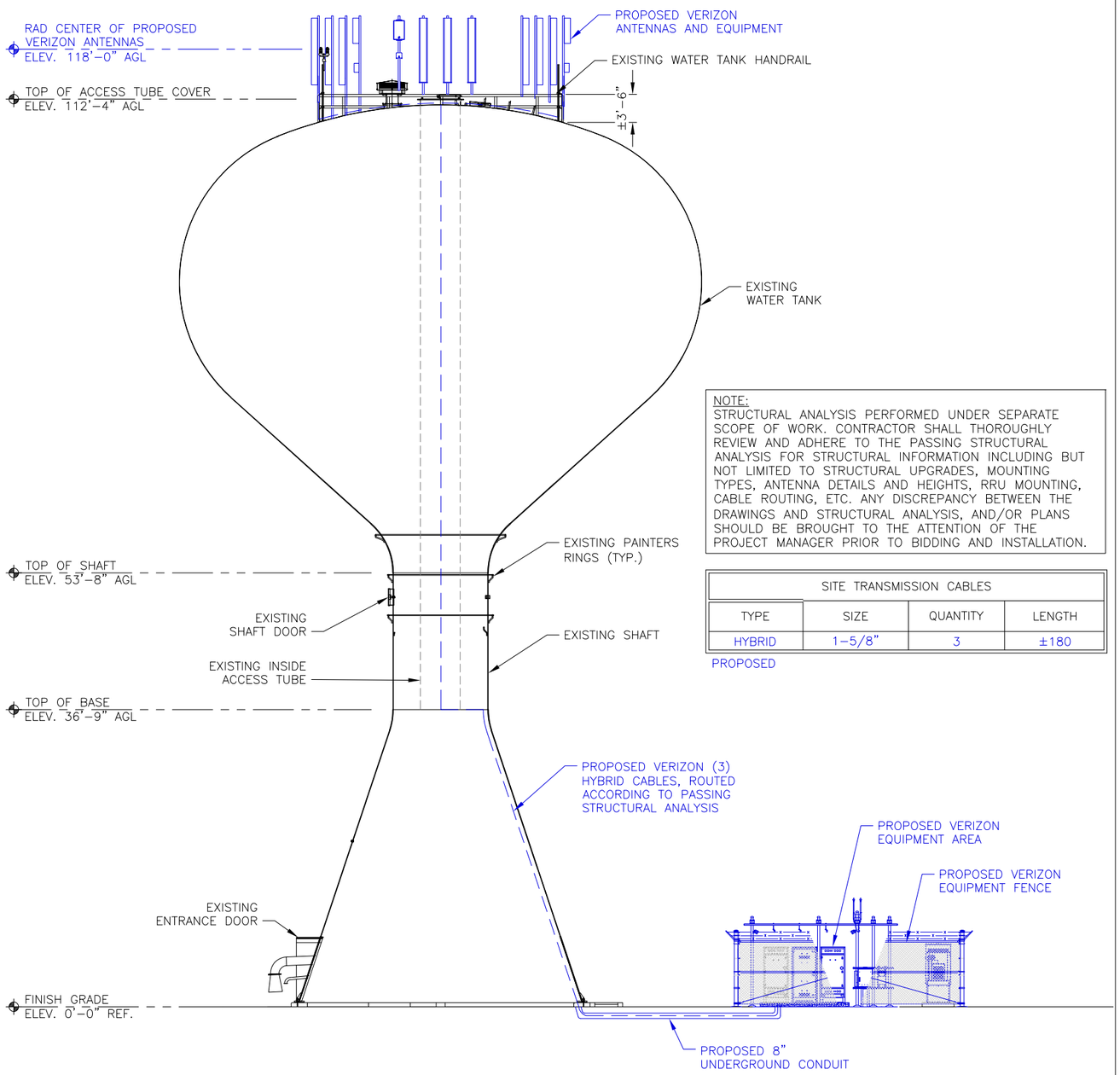

NOTE:
STRUCTURAL ANALYSIS PERFORMED UNDER SEPARATE SCOPE OF WORK. CONTRACTOR SHALL THOROUGHLY REVIEW AND ADHERE TO THE PASSING STRUCTURAL ANALYSIS FOR STRUCTURAL INFORMATION INCLUDING BUT NOT LIMITED TO STRUCTURAL UPGRADES, MOUNTING TYPES, ANTENNA DETAILS AND HEIGHTS, RRU MOUNTING, CABLE ROUTING, ETC. ANY DISCREPANCY BETWEEN THE DRAWINGS AND STRUCTURAL ANALYSIS, AND/OR PLANS SHOULD BE BROUGHT TO THE ATTENTION OF THE PROJECT MANAGER PRIOR TO BIDDING AND INSTALLATION.

SITE TRANSMISSION CABLES			
TYPE	SIZE	QUANTITY	LENGTH
HYBRID	1-5/8"	3	±180

PROPOSED

1 TOWER ELEVATION
SCALE: N.T.S.

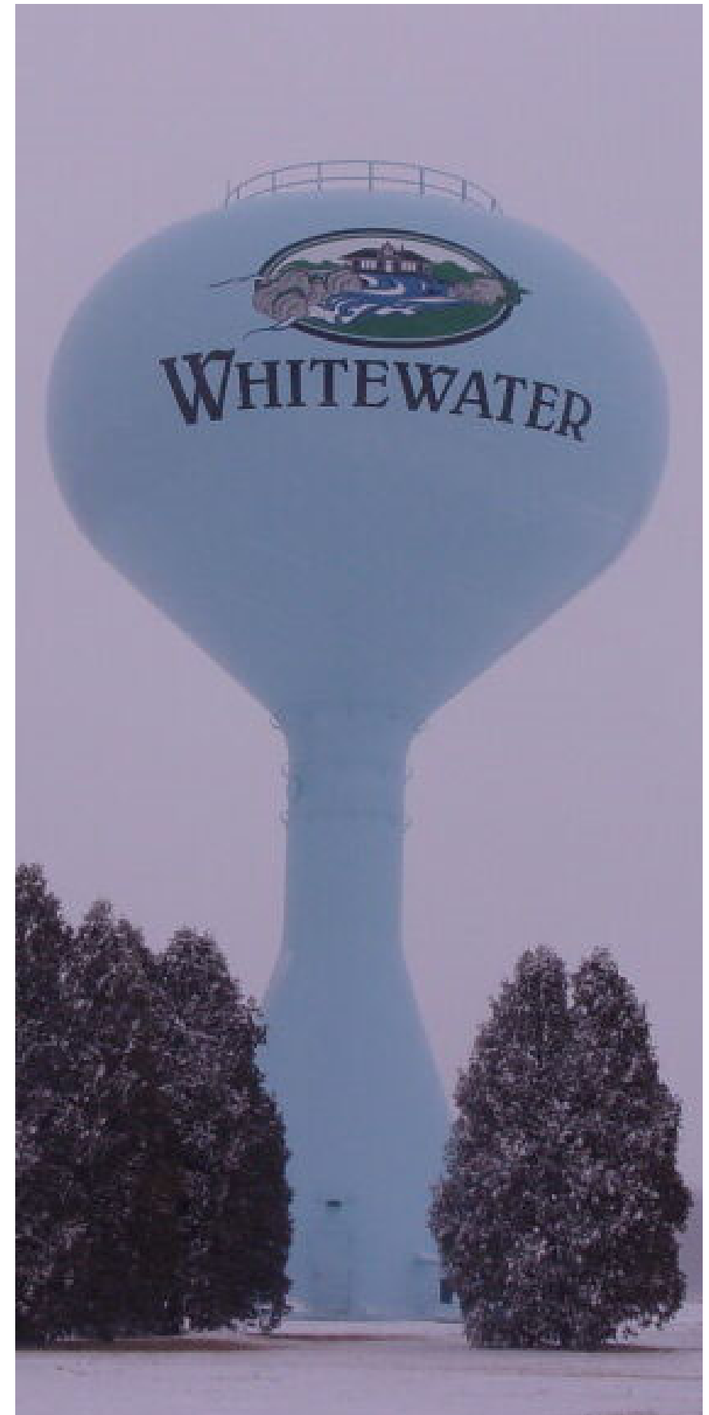

2 EXISTING SITE ELEVATION
SCALE: N.T.S.

PREPARED FOR:

verizon

CHICAGO SMSA LIMITED PARTNERSHIP
D/B/A VERIZON WIRELESS
1701 GOLF ROAD
TOWER 2, SUITE 400
ROLLING MEADOWS, IL 60008

SITE NAME:
WHITEWATER SOUTH
SITE NUMBER:
765538

SITE ADDRESS:
797 INDIAN MOUND PARKWAY
WHITEWATER, WI 53190
WALWORTH COUNTY

STAMP:

WISCONSIN
LUIS MENDOZA
E-49916
LADERA RANCH
CALIFORNIA
PROFESSIONAL ENGINEER

05/08/24

MOUNTAIN, LTD.
ENGINEERING

DRAWN BY:	DP
APPROVED BY:	LM
DATE DRAWN:	04/30/24

REVISION

NO	DESCRIPTION	BY	DATE
A	ISSUED FOR REVIEW	DP	05/06/24
0	ISSUED FOR CONSTRUCTION	DD	05/08/24

SHEET TITLE:
TOWER ELEVATION

SHEET NUMBER:
A2.0

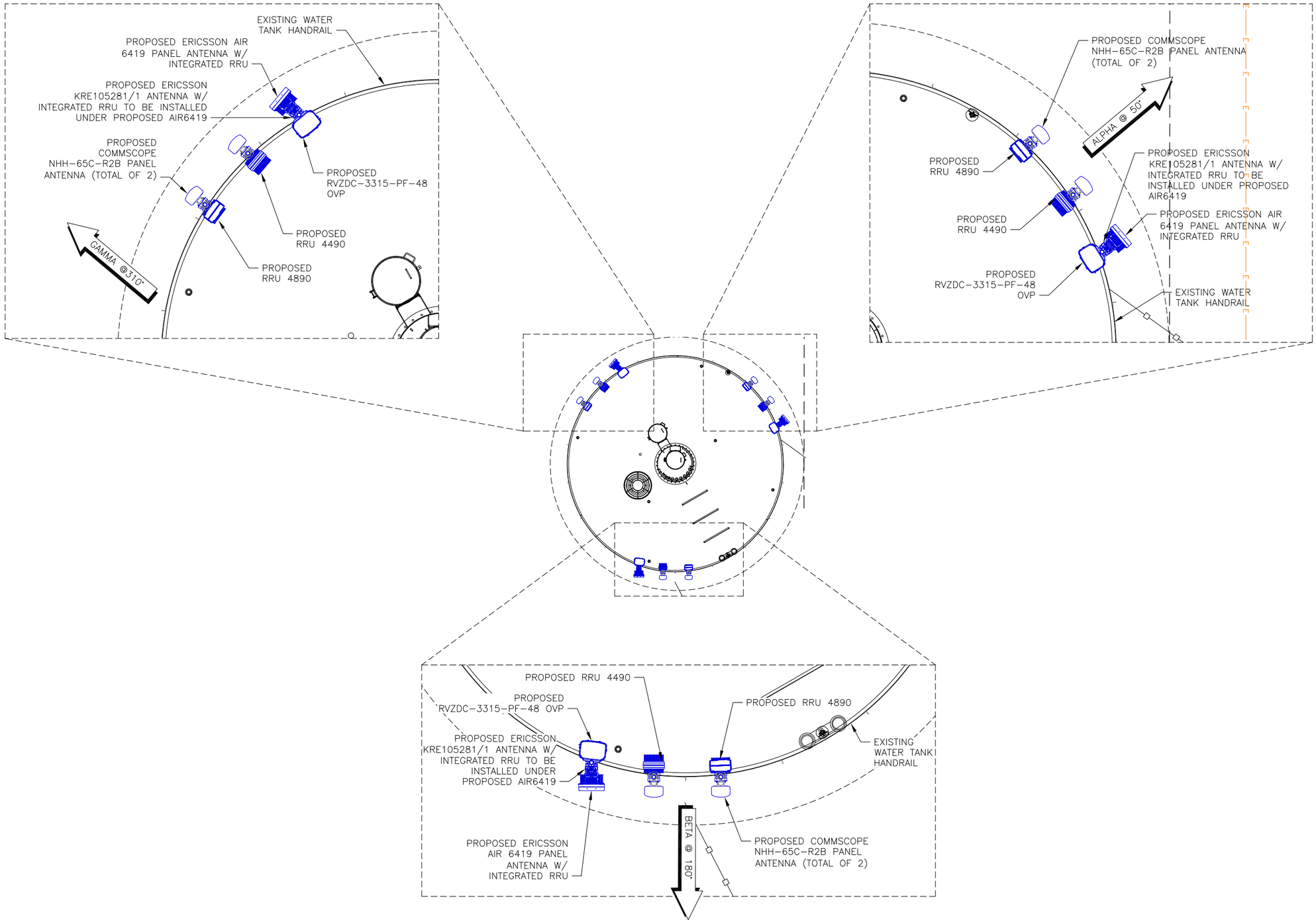

TRUE NORTH

1 PROPOSED ANTENNA PLAN

FULL SIZE PLOT SCALE: 3/8" = 1'-0"
HALF SIZE PLOT SCALE: 3/16" = 1'-0"

0 2' 4' 8'

PREPARED FOR:

verizon

CHICAGO SMSA LIMITED PARTNERSHIP
D/B/A VERIZON WIRELESS
1701 GOLF ROAD
TOWER 2, SUITE 400
ROLLING MEADOWS, IL 60008

SITE NAME:
WHITEWATER SOUTH
SITE NUMBER:
765538

SITE ADDRESS:
797 INDIAN MOUND PARKWAY
WHITEWATER, WI 53190
WALWORTH COUNTY

STAMP:

WISCONSIN
LUIS MENDOZA
E-49916
LADERA RANCH
CALIFORNIA
PROFESSIONAL ENGINEER

05/08/24

MOUNTAIN, LTD.
ENGINEERING

DRAWN BY:	DP
APPROVED BY:	LM
DATE DRAWN:	04/30/24

REVISION

NO	DESCRIPTION	BY	DATE
A	ISSUED FOR REVIEW	DP	05/06/24
0	ISSUED FOR CONSTRUCTION	DD	05/08/24

SHEET TITLE:
PROPOSED ANTENNA PLAN

SHEET NUMBER:
A2.1

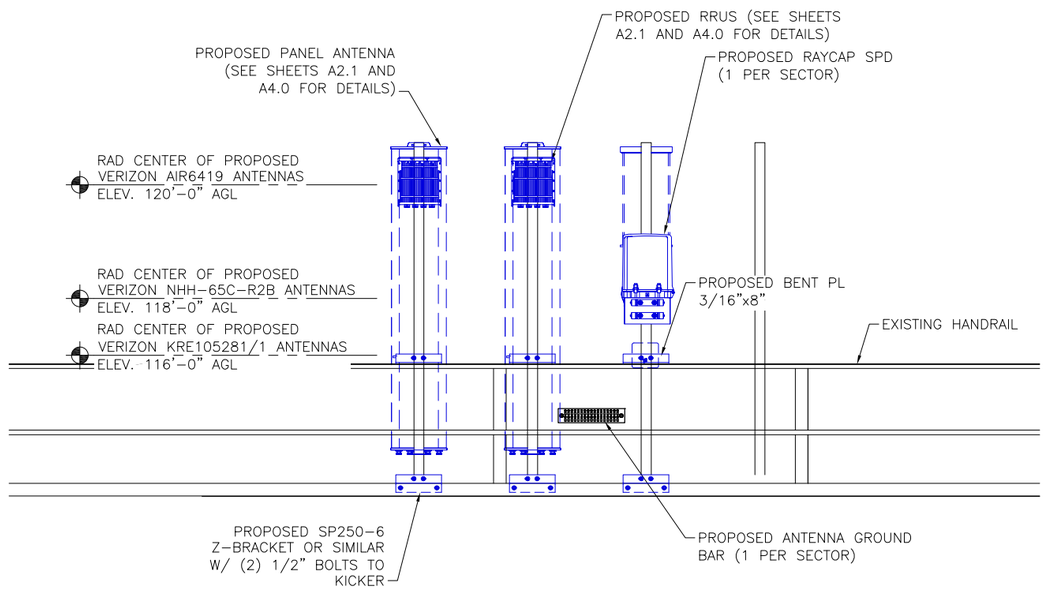

NOTES:
1. THIS DETAIL IS A GENERAL SCHEMATIC. SEE ANTENNA CONFIG. FOR ACTUAL TOWER ORIENTATION AND EQUIPMENT QUANTITIES.
2. CONTRACTOR TO VERIFY EXISTING AIR TERMINAL EXTENDS 2' MIN. ABOVE ALL ANTENNAS AND EQUIPMENT; CONTRACTOR TO RAISE IF NECESSARY.
3. CONTRACTOR TO INSTALL RAYCAP SPD AND REMOTE RADIO MOUNTS TO AVOID PEGS/SAFETY CLIMB AS NECESSARY.
4. PER TIA STANDARDS: FALL PROTECTION ANCHORAGES SHALL BE AVAILABLE AT A MAXIMUM SPACING OF FOUR (4) FEET OVER THE HEIGHT NOT EQUIPPED WITH SAFETY CLIMB SYSTEM OR OVER THE LENGTH OF THE OBSTRUCTION TO THE CLIMBING FACILITY.

1 ANTENNA AND EQUIPMENT MOUNTING
SCALE: N.T.S.

PREPARED FOR:

verizon

CHICAGO SMSA LIMITED PARTNERSHIP
D/B/A VERIZON WIRELESS
1701 GOLF ROAD
TOWER 2, SUITE 400
ROLLING MEADOWS, IL 60008

SITE NAME:
WHITEWATER SOUTH
SITE NUMBER:
765538
SITE ADDRESS:
797 INDIAN MOUND PARKWAY
WHITEWATER, WI 53190
WALWORTH COUNTY

STAMP:

WISCONSIN
LUIS MENDOZA
E-49916
LADERA RANCH
CALIFORNIA
PROFESSIONAL ENGINEER
05/08/24

MOUNTAIN, LTD.
ENGINEERING

DRAWN BY:	DP
APPROVED BY:	LM
DATE DRAWN:	04/30/24

REVISION

NO	DESCRIPTION	BY	DATE
A	ISSUED FOR REVIEW	DP	05/06/24
0	ISSUED FOR CONSTRUCTION	DD	05/08/24

SHEET TITLE:
ANTENNA AND EQUIPMENT MOUNTING

SHEET NUMBER:
A2.2

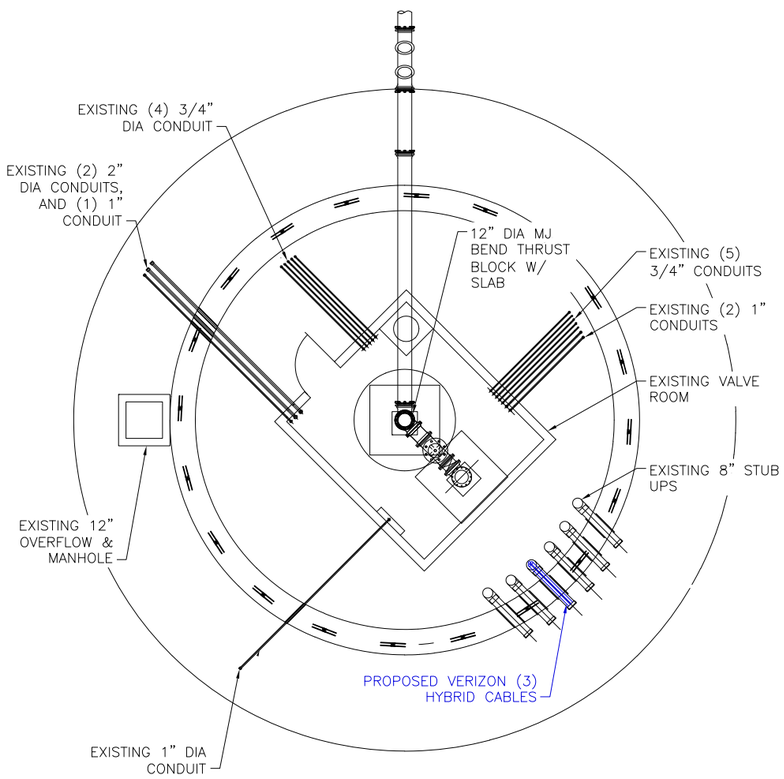

1 TOWER BELL SECTION
SCALE: N.T.S.

2 PROPOSED TOWER BELL HYBRID ROUTING
SCALE: N.T.S.

PREPARED FOR:

verizon

CHICAGO SMSA LIMITED PARTNERSHIP
D/B/A VERIZON WIRELESS
1701 GOLF ROAD
TOWER 2, SUITE 400
ROLLING MEADOWS, IL 60008

SITE NAME:
WHITEWATER SOUTH
SITE NUMBER:
765538
SITE ADDRESS:
797 INDIAN MOUND PARKWAY
WHITEWATER, WI 53190
WALWORTH COUNTY

STAMP:

WISCONSIN
LUIS MENDOZA
E-49916
LADERA RANCH
CALIFORNIA
PROFESSIONAL ENGINEER
05/08/24

MOUNTAIN, LTD.
ENGINEERING

DRAWN BY:	DP
APPROVED BY:	LM
DATE DRAWN:	04/30/24

REVISION

NO	DESCRIPTION	BY	DATE
A	ISSUED FOR REVIEW	DP	05/06/24
0	ISSUED FOR CONSTRUCTION	DD	05/08/24

SHEET TITLE:
TOWER BELL SECTION & TOWER BELL HYBRID ROUTING

SHEET NUMBER:
A2.3

Antenna Summary

Added

700	1900	AWS	AWS3	CBRS	CBAND	Make	Atoll Model	Item Description	Centerline	Tip Height	Azimuth	Inst. Type	Quantity	Item ID
				LTE		ERICSSON	KRE105281/1	ANTENNA 6524, 4T4R MICRO DLRECTIONAL 340	116	116.3	50(19) 180(20) 310(21)	PHYSICAL	3	1900055217
					5G	Ericsson	AIR6419	AIR 6419 B77D Radio Unit	120	121.2	50(1) 180(2) 310(3)	PHYSICAL	3	1900483699
LTE	LTE	LTE	LTE			COMMSCOPE	NHH-65C-R2B	HEX PORT, AWS/PCS/700/850, 8 FT, 65 HBW,	118	122	50(1) 180(2) 310(3)	PHYSICAL	6	1900056293

Removed

700	1900	AWS	AWS3	CBRS	CBAND	Make	Atoll Model	Item Description	Centerline	Tip Height	Azimuth	Inst. Type	Quantity	Item ID

No data available.

Retained

700	1900	AWS	AWS3	CBRS	CBAND	Make	Atoll Model	Item Description	Centerline	Tip Height	Azimuth	Inst. Type	Quantity	Item ID

No data available.

Added: 12 | **Removed:** 0 | **Retained:** 0

Equipment Summary

Added

Equipment Type	Location	700	1900	AWS	AWS3	CBRS	CBAND	Make	Atoll Model	Item Description	Cable Length	Cable Size	Install Type	Quantity	Item ID
RRU	Tower		LTE	LTE				ERICSSON INC	4890	DB Radio 4890HP B2+B66- Rem Radio Unit			PHYSICAL	3	1900483775
RRU	Tower						5G	Ericsson	AIR6419	AIR 6419 B77D Radio Unit			PHYSICAL	0	1900483699
RRU	Tower					LTE		ERICSSON INC	4408 B48 DC	RADIO 4408 B48 HW 1			PHYSICAL	3	1900068745
RRU	Tower	LTE						ERICSSON INC	4490	DB Radio 4490HP B5+B13- Rem Radio Unit			PHYSICAL	3	1900483084
Alarm	Tower							RAYCAPINC-001	3315-ALM-RS485	RETROFIT FOR THE 6OVP DIST BOX			PHYSICAL	3	000000001900070
Hybrid Cable	Tower							COMMSCOPET-001	HFT1206-24SV4-xxxG			1-5/8 inch	PHYSICAL	3	
OVP Box	Tower							RAYCAPINC-001	RVZDC-3315-PF-48	TOWER TOP AND BASE POWER PROTECTION FIBE			PHYSICAL	3	000000001900422

Removed

Equipment Type	Location	700	1900	AWS	AWS3	CBRS	CBAND	Make	Atoll Model	Item Description	Cable Length	Cable Size	Install Type	Quantity	Item ID

No data available.

Retained

Equipment Type	Location	700	1900	AWS	AWS3	CBRS	CBAND	Make	Atoll Model	Item Description	Cable Length	Cable Size	Install Type	Quantity	Item ID

No data available.

PREPARED FOR:

verizon

CHICAGO SMSA LIMITED PARTNERSHIP
D/B/A VERIZON WIRELESS
1701 GOLF ROAD
TOWER 2, SUITE 400
ROLLING MEADOWS, IL 60008

SITE NAME:
WHITEWATER SOUTH

SITE NUMBER:
765538

SITE ADDRESS:
797 INDIAN MOUND PARKWAY
WHITEWATER, WI 53190
WALWORTH COUNTY

STAMP:

WISCONSIN
LUIS MENDOZA
E-49916
LADERA RANCH
CALIFORNIA
PROFESSIONAL ENGINEER

05/08/24

MOUNTAIN, LTD.
ENGINEERING

DRAWN BY:	DP
APPROVED BY:	LM
DATE DRAWN:	04/30/24

REVISION

NO	DESCRIPTION	BY	DATE
A	ISSUED FOR REVIEW	DP	05/06/24
0	ISSUED FOR CONSTRUCTION	DD	05/08/24

SHEET TITLE:
RF SUMMARY

SHEET NUMBER:
A3.0

Service Info

AWS3 LTE

Sector	CAND		
Azimuth	01	02	03
Cell / ENode B ID	50	180	310
Antenna Model	NHH-65C-R2B	NHH-65C-R2B	NHH-65C-R2B
Antenna Make	COMMSCOPE	COMMSCOPE	COMMSCOPE
Antenna Centerline(Ft)	118	118	118
Mechanical Down-Tilt(Deg.)	0	0	0
Electrical Down-Tilt	0	0	0
Tip Height	122	122	122
Regulatory Power	377.19	377.19	377.19
DLEARFCN	67086	67086	67086
Channel Bandwidth(MHz)	10	10	10
Total ERP (W)	2069.19	2069.19	2069.19
TMA Make			
TMA Model			
RRU Make	Ericsson	Ericsson	Ericsson
RRU Model	4890	4890	4890
Number of Tx, Rx Lines	4,4	4,4	4,4
Position			
Transmitter Id	15896473	15896478	15896468
Source	ATOLL_API	ATOLL_API	ATOLL_API

CBRS 3.5 GHz

Sector	CAND		
Azimuth	19	19	19
Cell / ENode B ID	50	50	50
Antenna Model	KRE105281/1	KRE105281/1	KRE105281/1
Antenna Make	ERICSSON	ERICSSON	ERICSSON
Antenna Centerline(Ft)	116	116	116
Mechanical Down-Tilt(Deg.)	0	0	0
Electrical Down-Tilt	9	9	9
Tip Height	116.3	116.3	116.3
Regulatory Power	24.98	24.98	24.98
DLEARFCN	55790	56090	55990
Channel Bandwidth(MHz)	10	10	10
Total ERP (W)	34.26	34.26	34.26
TMA Make			
TMA Model			
RRU Make	Ericsson	Ericsson	Ericsson
RRU Model	4408 B48 DC	4408 B48 DC	4408 B48 DC
Number of Tx, Rx Lines	4,4	4,4	4,4
Position			
Transmitter Id	15896845	15896854	15896851
Source	ATOLL_API	ATOLL_API	ATOLL_API
Azimuth	19	20	20
Cell / ENode B ID	50	180	180
Antenna Model	KRE105281/1	KRE105281/1	KRE105281/1
Antenna Make	ERICSSON	ERICSSON	ERICSSON
Antenna Centerline(Ft)	116	116	116
Mechanical Down-Tilt(Deg.)	0	0	0
Electrical Down-Tilt	9	9	9
Tip Height	116.3	116.3	116.3
Regulatory Power	24.98	24.98	24.98
DLEARFCN	55890	55790	56090
Channel Bandwidth(MHz)	10	10	10
Total ERP (W)	34.26	34.26	34.26
TMA Make			
TMA Model			
RRU Make	Ericsson	Ericsson	Ericsson
RRU Model	4408 B48 DC	4408 B48 DC	4408 B48 DC
Number of Tx, Rx Lines	4,4	4,4	4,4
Position			
Transmitter Id	15896848	15896846	15896855
Source	ATOLL_API	ATOLL_API	ATOLL_API
Azimuth	20	20	21
Cell / ENode B ID	180	180	310
Antenna Model	KRE105281/1	KRE105281/1	KRE105281/1
Antenna Make	ERICSSON	ERICSSON	ERICSSON
Antenna Centerline(Ft)	116	116	116
Mechanical Down-Tilt(Deg.)	0	0	0
Electrical Down-Tilt	9	9	9
Tip Height	116.3	116.3	116.3
Regulatory Power	24.98	24.98	24.98
DLEARFCN	55990	55890	55790
Channel Bandwidth(MHz)	10	10	10
Total ERP (W)	34.26	34.26	34.26
TMA Make			
TMA Model			
RRU Make	Ericsson	Ericsson	Ericsson
RRU Model	4408 B48 DC	4408 B48 DC	4408 B48 DC
Number of Tx, Rx Lines	4,4	4,4	4,4
Position			
Transmitter Id	15896852	15896849	15896847
Source	ATOLL_API	ATOLL_API	ATOLL_API
Azimuth	21		
Cell / ENode B ID	310		
Antenna Model	KRE105281/1		
Antenna Make	ERICSSON		
Antenna Centerline(Ft)	116		
Mechanical Down-Tilt(Deg.)	0		
Electrical Down-Tilt	9		
Tip Height	116.3		
Regulatory Power	24.98		
DLEARFCN	56090		
Channel Bandwidth(MHz)	10		
Total ERP (W)	34.26		
TMA Make			
TMA Model			
RRU Make	Ericsson		
RRU Model	4408 B48 DC		
Number of Tx, Rx Lines	4,4		
Position			
Transmitter Id	15896856		
Source	ATOLL_API		
Azimuth	21	21	
Cell / ENode B ID	310	310	
Antenna Model	KRE105281/1	KRE105281/1	
Antenna Make	ERICSSON	ERICSSON	
Antenna Centerline(Ft)	116	116	
Mechanical Down-Tilt(Deg.)	0	0	
Electrical Down-Tilt	9	9	
Tip Height	116.3	116.3	
Regulatory Power	24.98	24.98	
DLEARFCN	55990	55890	
Channel Bandwidth(MHz)	10	10	
Total ERP (W)	34.26	34.26	
TMA Make			
TMA Model			
RRU Make	Ericsson	Ericsson	
RRU Model	4408 B48 DC	4408 B48 DC	
Number of Tx, Rx Lines	4,4	4,4	
Position			
Transmitter Id	15896853	15896850	
Source	ATOLL_API	ATOLL_API	

700 MHz LTE

Sector	CAND		
Azimuth	01	02	03
Cell / ENode B ID	50	180	310
Antenna Model	NHH-65C-R2B	NHH-65C-R2B	NHH-65C-R2B
Antenna Make	COMMSCOPE	COMMSCOPE	COMMSCOPE
Antenna Centerline(Ft)	118	118	118
Mechanical Down-Tilt(Deg.)	0	0	0
Electrical Down-Tilt	0	0	0
Tip Height	122	122	122
Regulatory Power	149.82	149.82	149.82
DLEARFCN	5230	5230	5230
Channel Bandwidth(MHz)	10	10	10
Total ERP (W)	1348.34	1348.34	1348.34
TMA Make			
TMA Model			
RRU Make	Ericsson	Ericsson	Ericsson
RRU Model	4490	4490	4490
Number of Tx, Rx Lines	4,4	4,4	4,4
Position			
Transmitter Id	15896470	15896475	15896480
Source	ATOLL_API	ATOLL_API	ATOLL_API

1900 MHz LTE

Sector	CAND		
Azimuth	01	02	03
Cell / ENode B ID	50	180	310
Antenna Model	NHH-65C-R2B	NHH-65C-R2B	NHH-65C-R2B
Antenna Make	COMMSCOPE	COMMSCOPE	COMMSCOPE
Antenna Centerline(Ft)	118	118	118
Mechanical Down-Tilt(Deg.)	0	0	0
Electrical Down-Tilt	0	0	0
Tip Height	122	122	122
Regulatory Power	251.46	251.46	251.46
DLEARFCN	875	875	875
Channel Bandwidth(MHz)	15	15	15
Total ERP (W)	2069.19	2069.19	2069.19
TMA Make			
TMA Model			
RRU Make	Ericsson	Ericsson	Ericsson
RRU Model	4890	4890	4890
Number of Tx, Rx Lines	4,4	4,4	4,4
Position			
Transmitter Id	15896471	15896476	15896481
Source	ATOLL_API	ATOLL_API	ATOLL_API

2100 MHz LTE

Sector	CAND		
Azimuth	01	02	03
Cell / ENode B ID	50	180	310
Antenna Model	NHH-65C-R2B	NHH-65C-R2B	NHH-65C-R2B
Antenna Make	COMMSCOPE	COMMSCOPE	COMMSCOPE
Antenna Centerline(Ft)	118	118	118
Mechanical Down-Tilt(Deg.)	0	0	0
Electrical Down-Tilt	0	0	0
Tip Height	122	122	122
Regulatory Power	188.59	188.59	188.59
DLEARFCN	2050	2050	2050
Channel Bandwidth(MHz)	20	20	20
Total ERP (W)	2069.19	2069.19	2069.19
TMA Make			
TMA Model			
RRU Make	Ericsson	Ericsson	Ericsson
RRU Model	4890	4890	4890
Number of Tx, Rx Lines	4,4	4,4	4,4
Position			
Transmitter Id	15896472	15896477	15896482
Source	ATOLL_API	ATOLL_API	ATOLL_API

CBAND

Sector	CAND		
Azimuth	0001	0002	0003
Cell / ENode B ID	50	180	310
Antenna Model	AIR6419	AIR6419	AIR6419
Antenna Make	Ericsson	Ericsson	Ericsson
Antenna Centerline(Ft)	120	120	120
Mechanical Down-Tilt(Deg.)	0	0	0
Electrical Down-Tilt	0	0	0
Tip Height	121.2	121.2	121.2
Regulatory Power	690.52	690.52	690.52
DLEARFCN	650006, 654652	650006, 654652	650006, 654652
Channel Bandwidth(MHz)	100,40	100,40	100,40
Total ERP (W)	27989.81	27989.81	27989.81
TMA Make			
TMA Model			
RRU Make	Ericsson	Ericsson	Ericsson
RRU Model	AIR6419	AIR6419	AIR6419
Number of Tx, Rx Lines	2,2	2,2	2,2
Position			
Transmitter Id	15896474	15896479	15896469
Source	ATOLL_API	ATOLL_API	ATOLL_API

Service Comments

NOTE:
1. RF DESIGN AND DETAILS ON THIS SHEET PROVIDED BY VERIZON AND AR INCLUDED FOR CONVENIENCE ONLY. FINAL RF DESIGN TO BE VERIFIED WITH VERIZON PRIOR TO CONSTRUCTION. IF SIGNIFICANT CHANGES OR DISCREPANCIES ARE IDENTIFIED. CONTACT ENGINEER PRIOR TO INSTALLATION.

1 SERVICE INFORMATION
SCALE: N.T.S.

PREPARED FOR:

verizon

CHICAGO SMSA LIMITED PARTNERSHIP
D/B/A VERIZON WIRELESS
1701 GOLF ROAD
TOWER 2, SUITE 400
ROLLING MEADOWS, IL 60008

SITE NAME:
WHITEWATER SOUTH
SITE NUMBER:
765538
SITE ADDRESS:
797 INDIAN MOUND PARKWAY
WHITEWATER, WI 53190
WALWORTH COUNTY

STAMP:

WISCONSIN
LUIS MENDOZA
E-49916
LADERA RANCH
CALIFORNIA
PROFESSIONAL ENGINEER

05/08/24

MOUNTAIN, LTD.
ENGINEERING

DRAWN BY:	DP
APPROVED BY:	LM
DATE DRAWN:	04/30/24

REVISION

NO	DESCRIPTION	BY	DATE
A	ISSUED FOR REVIEW	DP	05/06/24
0	ISSUED FOR CONSTRUCTION	DD	05/08/24

SHEET TITLE:
RF SUMMARY

SHEET NUMBER:
A3.1

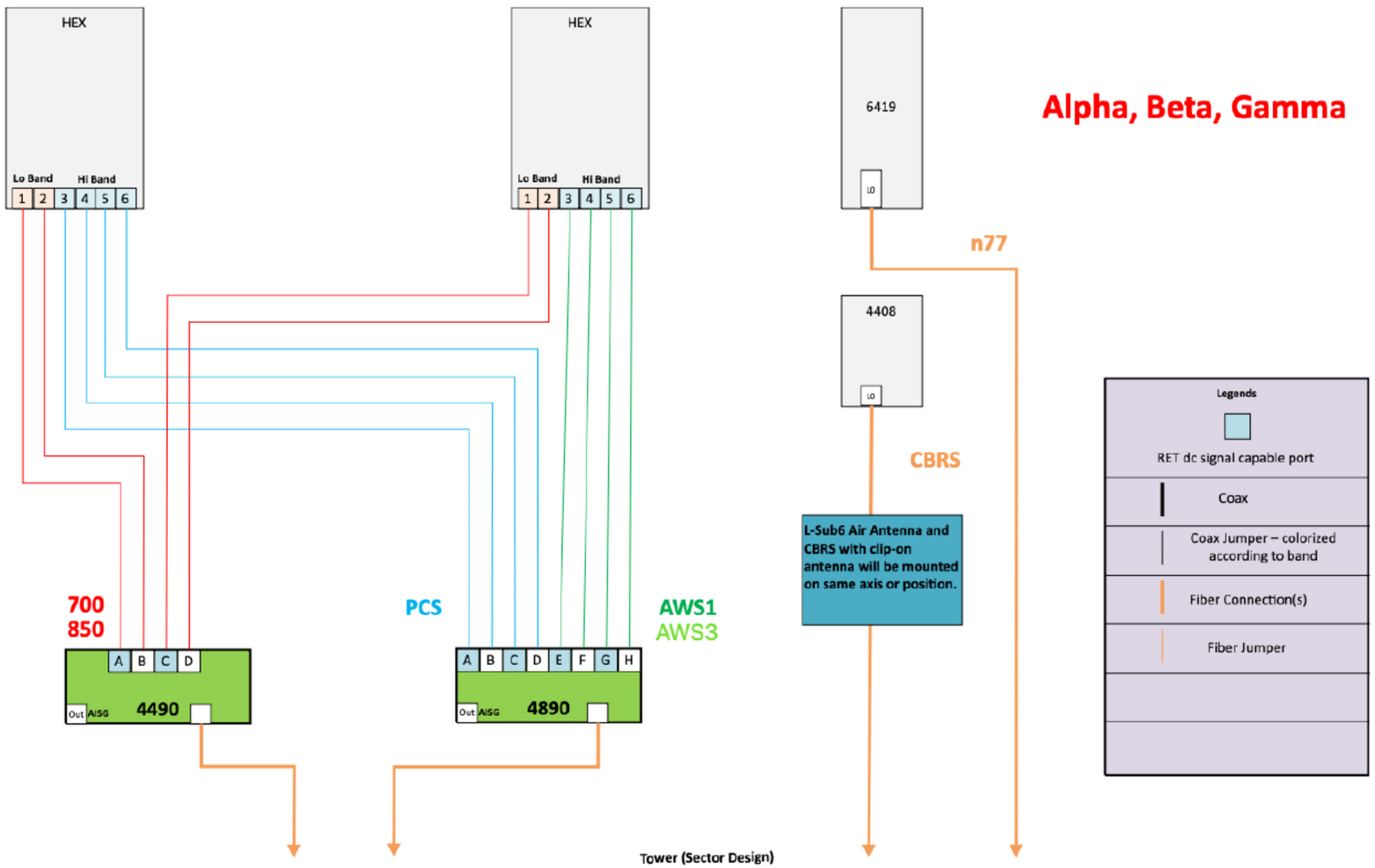

Notes:

- Antenna view is from the back of the antennas
- Colors of connection are just for clarification
- Follow RET cabling standard for non-Smart Bias-T Ants
- Non-RF path elements like OVP/HTTA Box and Hybrid cables not shown
- Size of objects in drawing doesn't reflect equipment true dimension

NOTE:
1. RF DESIGN AND DETAILS ON THIS SHEET PROVIDED BY VERIZON AND ARE INCLUDED FOR CONVENIENCE ONLY. FINAL RF DESIGN TO BE VERIFIED WITH VERIZON PRIOR TO CONSTRUCTION. IF SIGNIFICANT CHANGES OR DISCREPANCIES ARE IDENTIFIED. CONTACT ENGINEER PRIOR TO INSTALLATION.

PREPARED FOR:

verizon

CHICAGO SMSA LIMITED PARTNERSHIP
D/B/A VERIZON WIRELESS
1701 GOLF ROAD
TOWER 2, SUITE 400
ROLLING MEADOWS, IL 60008

SITE NAME:
WHITEWATER SOUTH
SITE NUMBER:
765538

SITE ADDRESS:
797 INDIAN MOUND PARKWAY
WHITEWATER, WI 53190
WALWORTH COUNTY

STAMP:

WISCONSIN
LUIS MENDOZA
E-49916
LADERA RANCH
CALIFORNIA
PROFESSIONAL ENGINEER
05/08/24

MOUNTAIN, LTD.
ENGINEERING

DRAWN BY:	DP
APPROVED BY:	LM
DATE DRAWN:	04/30/24

REVISION

NO	DESCRIPTION	BY	DATE
A	ISSUED FOR REVIEW	DP	05/06/24
0	ISSUED FOR CONSTRUCTION	DD	05/08/24

SHEET TITLE:
ANTENNA PLUMBING DIAGRAM

SHEET NUMBER:
A3.2

NHH-65C-R2B

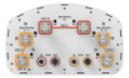

6-port sector antenna, 2x 698–896 and 4x 1695–2360 MHz, 65° HPBW, 2x RET. Both high bands share the same electrical tilt.

- Interleaved dipole technology providing for attractive, low wind load mechanical package
- Internal SBT on low and high band allow remote RET control from the radio over the RF jumper cable
- Separate RS-485 RET input/output for low and high band
- One RET for low band and one RET for both high bands to ensure same tilt level for 4x Rx or 4x MIMO

General Specifications

Antenna Type	Sector
Band	Multiband
Color	Light gray
Grounding Type	RF connector body grounded to reflector and mounting bracket
Performance Note	Outdoor usage | Wind loading figures are validated by wind tunnel measurements described in white paper WP-112534-EN
Radome Material	Fiberglass, UV resistant
Radiator Material	Copper | Low loss circuit board
Reflector Material	Aluminum
RF Connector Interface	4.3-10 Female
RF Connector Location	Bottom
RF Connector Quantity, high band	4
RF Connector Quantity, low band	2
RF Connector Quantity, total	6

Remote Electrical Tilt (RET) Information

RET Interface	8-pin DIN Female | 8-pin DIN Male
RET Interface, quantity	2 female | 2 male
Input Voltage	10–30 Vdc
Internal Bias Tee	Port 1 | Port 3
Internal RET	High band (1) | Low band (1)
Power Consumption, idle state, maximum	2 W
Power Consumption, normal conditions, maximum	13 W

©2022 CommScope, Inc. All rights reserved. All trademarks identified by ® or ™ are registered trademarks, respectively, of CommScope. All specifications are subject to change without notice. See www.commscope.com for the most current information. Revised: August 4, 2022

COMMSCOPE®

NHH-65C-R2B

Protocol	3GPP/AISG 2.0 (Single RET)

Dimensions

Width	301 mm | 11.85 in
Depth	180 mm | 7.087 in
Length	2438 mm | 95.984 in
Net Weight, without mounting kit	23.4 kg | 51.588 lb

Array Layout

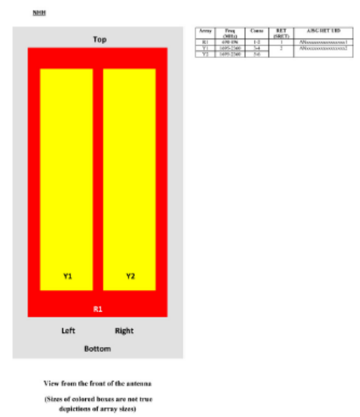

Electrical Specifications

Impedance	50 ohm
Operating Frequency Band	1695 – 2360 MHz | 698 – 896 MHz

©2022 CommScope, Inc. All rights reserved. All trademarks identified by ® or ™ are registered trademarks, respectively, of CommScope. All specifications are subject to change without notice. See www.commscope.com for the most current information. Revised: August 4, 2022

COMMSCOPE®

NHH-65C-R2B

Polarization	±45°
Total Input Power, maximum	900 W @ 50 °C

Electrical Specifications

Frequency Band, MHz	**698–806**	**806–896**	**1695–1880**	**1850–1990**	**1920–2200**	**2300–2360**
Gain, dBi	16	16.1	17.3	17.7	18.3	18.2
Beamwidth, Horizontal, degrees	65	62	74	66	62	59
Beamwidth, Vertical, degrees	9	7.9	5.6	5.2	4.9	4.5
Beam Tilt, degrees	0–11	0–11	0–7	0–7	0–7	0–7
USLS (First Lobe), dB	21	18	19	20	22	18
Front-to-Back Ratio at 180°, dB	35	31	33	29	29	30
Isolation, Cross Polarization, dB	25	25	25	25	25	25
Isolation, Inter-band, dB	30	30	30	30	30	30
VSWR | Return loss, dB	1.5 | 14.0	1.5 | 14.0	1.5 | 14.0	1.5 | 14.0	1.5 | 14.0	1.5 | 14.0
PIM, 3rd Order, 2 x 20 W, dBc	-153	-153	-153	-153	-153	-153
Input Power per Port, maximum, watts	400	400	350	350	350	300

Electrical Specifications, BASTA

Frequency Band, MHz	**698–806**	**806–896**	**1695–1880**	**1850–1990**	**1920–2200**	**2300–2360**
Gain by all Beam Tilts, average, dBi	15.8	15.9	16.9	17.5	18	17.9
Gain by all Beam Tilts Tolerance, dB	±0.4	±0.4	±0.4	±0.3	±0.6	±0.4
Gain by Beam Tilt, average, dBi	0 ° | 15.9 5 ° | 15.9 11 ° | 15.5	0 ° | 15.8 5 ° | 16.0 11 ° | 15.7	0 ° | 16.9 4 ° | 17.0 7 ° | 16.9	0 ° | 17.4 4 ° | 17.5 7 ° | 17.4	0 ° | 17.9 4 ° | 18.0 7 ° | 18.0	0 ° | 17.8 4 ° | 17.9 7 ° | 17.9
Beamwidth, Horizontal Tolerance, degrees	±1.2	±1.6	±5.3	±3.4	±6	±3.1
Beamwidth, Vertical Tolerance, degrees	±0.6	±0.4	±0.3	±0.2	±0.2	±0.2
USLS, beampeak to 20° above beampeak, dB	15	14	17	16	17	15
Front-to-Back Total Power at 180° ± 30°, dB	25.6	23.8	28	25	25	24
CPR at Boresight, dB	18	26	20	25	20	17

©2022 CommScope, Inc. All rights reserved. All trademarks identified by ® or ™ are registered trademarks, respectively, of CommScope. All specifications are subject to change without notice. See www.commscope.com for the most current information. Revised: August 4, 2022

COMMSCOPE®

NHH-65C-R2B

CPR at Sector, dB	15	9	11	10	8	2

Mechanical Specifications

Effective Projective Area (EPA), frontal	0.37 m² | 3.983 ft²
Effective Projective Area (EPA), lateral	0.31 m² | 3.337 ft²
Wind Loading @ Velocity, frontal	393.0 N @ 150 km/h (88.3 lbf @ 150 km/h)
Wind Loading @ Velocity, lateral	330.0 N @ 150 km/h (74.2 lbf @ 150 km/h)
Wind Loading @ Velocity, maximum	757.0 N @ 150 km/h (170.2 lbf @ 150 km/h)
Wind Loading @ Velocity, rear	398.0 N @ 150 km/h (89.5 lbf @ 150 km/h)
Wind Speed, maximum	241 km/h | 149.75 mph

Packaging and Weights

Width, packed	380 mm | 14.961 in
Depth, packed	295 mm | 11.614 in
Length, packed	2571 mm | 101.221 in
Weight, gross	35.9 kg | 79.146 lb

Regulatory Compliance/Certifications

Agency	**Classification**
CHINA-ROHS	Above maximum concentration value
ISO 9001:2015	Designed, manufactured and/or distributed under this quality management system
ROHS	Compliant/Exempted

Included Products

BSAMNT-3 – Wide Profile Antenna Downtilt Mounting Kit for 2.4 - 4.5 in (60 - 115 mm) OD round members. Kit contains one scissor top bracket set and one bottom bracket set.

* Footnotes

Performance Note	Severe environmental conditions may degrade optimum performance

©2022 CommScope, Inc. All rights reserved. All trademarks identified by ® or ™ are registered trademarks, respectively, of CommScope. All specifications are subject to change without notice. See www.commscope.com for the most current information. Revised: August 4, 2022

COMMSCOPE®

1 NHH-65C-R2B ANTENNA DETAIL
SCALE: N.T.S.

Optional integrated antenna

Item	Description
KRE105280/1	Antenna 6523;4T4R Micro directional 1710-2200 MHz (Radio 4402)
KRE105281/1	Antenna 6524; 4T4R Micro directional 3400-3800 MHz (Radio 4408)

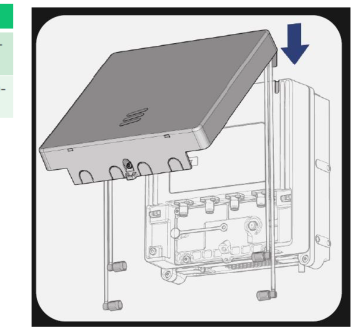

- RF jumpers included and part of optional antenna product

Radio specifics

- 4TX/4RX FDD
- Tx Power 4x5W
- Operating Bands: B66A and B2/25
- IBW up to 90 MHz
- Up to 6 LTE carriers
- 2x 2.5/5/9.8/10.1Gbps CPRI
- AC or -48 VDC Support Units, (single new rev compared to 2203, dual SUP support release TBD)
- Integrated (Antenna 6523) or external antenna
- RF Connector: NEX10
- 2 external alarm
- IP 65
- -40 to +55°C

Radio 4402

- 4TX/4RX TDD
- Tx Power 4x5W
- Operating Bands: B48/ CBRS
- Up to 6 LTE carriers, IBW up to 150 MHz (ENM dependency)
- 2x 2.5/5/9.8/10.1Gbps CPRI
- AC or -48 VDC Support Units, (single new version compared to 2208, dual SUP support release TBD)
- Integrated (Antenna 6524) or external antenna
- RF Connector: NEX10
- 2 external alarm
- IP 65
- -40 to +55°C

Radio 4408

DIMENSIONS (LxWxD): 9"x8"x5"
WEIGHT: 20 LBS

2 KRE105281/1 ANTENNA/RRU DETAIL
SCALE: N.T.S.

AIR 6419 B77D/ C-Band

- Advanced Antenna System (AAS)
- 64TX/64RX with 192 AE, (3x1)x(4x8) x-pol
- Up to 320W , PSD 4W/MHz
- EIRP up to 79 dBm
- Up to 200 MHz IBW
- Max total carrier BW: 200MHz for NR
- Support number of layers: DL/UL 16/8

AIR 6419 B77D/ C-Band	Height	Width	Depth	Weight
wo protruding items	28.3 In (717 mm)	16.1 In (408 mm)	8.0 In (202 mm)	71 lbs (32 Kg)
w protruding items	31.3 In (793 mm)	16.1 In (408 mm)	9.8 In (248 mm)	

- 3 x 25 Gbps eCPRI
- -48 VDC (3-wire or 2-wire), Fuse Minimum 40 A, maximum 50 A
- Power consumption: TBD
- - 40 to +55°C

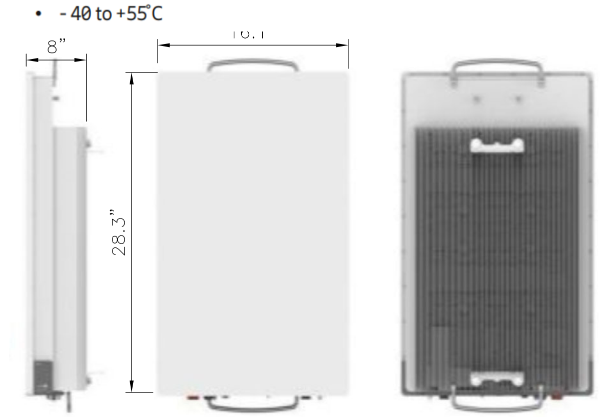

3 AIR6419 ANTENNA DETAIL
SCALE: N.T.S.

PREPARED FOR:

verizon

CHICAGO SMSA LIMITED PARTNERSHIP
D/B/A VERIZON WIRELESS
1701 GOLF ROAD
TOWER 2, SUITE 400
ROLLING MEADOWS, IL 60008

SITE NAME:
WHITEWATER SOUTH
SITE NUMBER:
765538
SITE ADDRESS:
797 INDIAN MOUND PARKWAY
WHITEWATER, WI 53190
WALWORTH COUNTY

STAMP:

WISCONSIN
LUIS MENDOZA
E-49916
LADERA RANCH
CALIFORNIA
PROFESSIONAL ENGINEER

05/08/24

MOUNTAIN, LTD.
ENGINEERING

DRAWN BY:	DP
APPROVED BY:	LM
DATE DRAWN:	04/30/24

REVISION

NO	DESCRIPTION	BY	DATE
A	ISSUED FOR REVIEW	DP	05/06/24
0	ISSUED FOR CONSTRUCTION	DD	05/08/24

SHEET TITLE:
ANTENNA DETAILS

SHEET NUMBER:
A4.0

MANUFACTURER: RAYCAP
MODEL: RVZDC-3315-PF-48
DIMENSIONS: 29.5"x16.5"x12.6" (HxWxD)
WEIGHT: 30 LBS

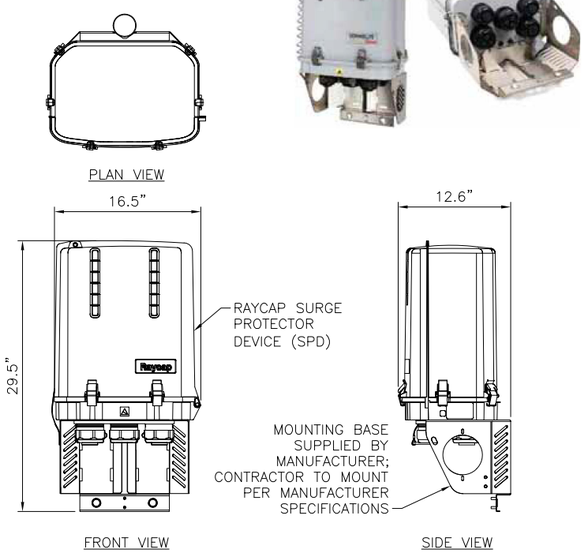

1 RAYCAP SURGE PROTECTOR DEVICE (SPD)

SCALE: N.T.S.

MANUFACTURER: ERICSSON
MODEL: RRU 4890
DIMENSIONS: 17.5"x15.2"x7.0" (HxWxD)
WEIGHT: 69.5 LBS

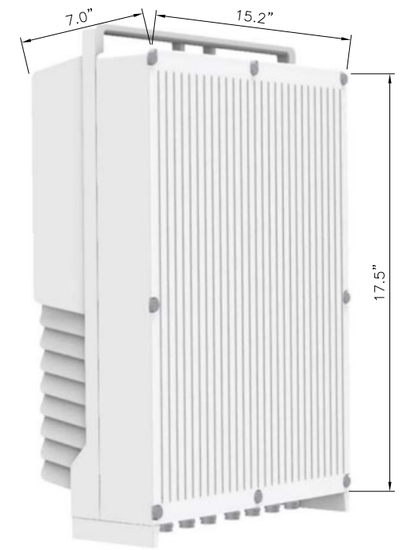

2 REMOTE RADIO UNIT (RRU)

SCALE: N.T.S.

MANUFACTURER: ERICSSON
MODEL: RRU 4490
DIMENSIONS: 17.5"x15.2"x6.8" (HxWxD)
WEIGHT: 68.4 LBS

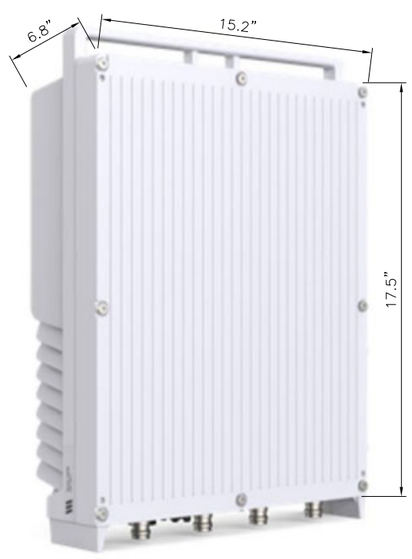

3 REMOTE RADIO UNIT (RRU)

SCALE: N.T.S.

MANUFACTURER: RAYCAP
MODEL: 3315-ALM-RS485
DIMENSIONS: 9.51" X 3.60" X .83" (HXWXD)
WEIGHT: 1.1 LBS (.50 KG)

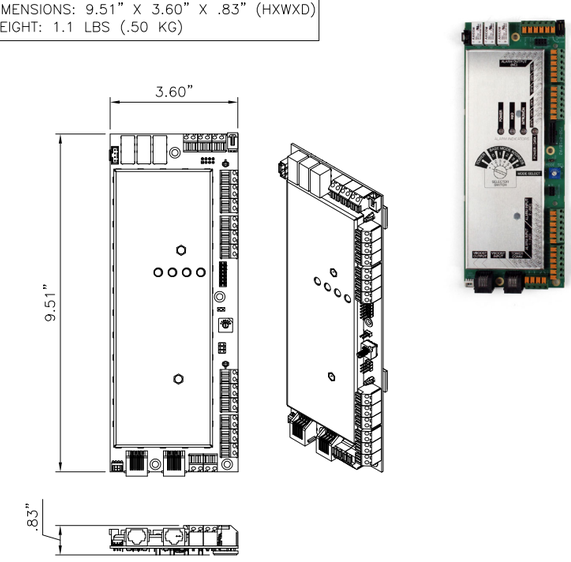

4 ALARM 3315-ALM-RS485

SCALE: N.T.S.

PREPARED FOR:

verizon

CHICAGO SMSA LIMITED PARTNERSHIP
D/B/A VERIZON WIRELESS
1701 GOLF ROAD
TOWER 2, SUITE 400
ROLLING MEADOWS, IL 60008

SITE NAME:
WHITEWATER SOUTH
SITE NUMBER:
765538

SITE ADDRESS:
797 INDIAN MOUND PARKWAY
WHITEWATER, WI 53190
WALWORTH COUNTY

STAMP:

WISCONSIN
LUIS MENDOZA
E-49916
LADERA RANCH
CALIFORNIA
PROFESSIONAL ENGINEER

05/08/24

MOUNTAIN, LTD.
ENGINEERING

DRAWN BY:	DP
APPROVED BY:	LM
DATE DRAWN:	04/30/24

REVISION

NO	DESCRIPTION	BY	DATE
A	ISSUED FOR REVIEW	DP	05/06/24
0	ISSUED FOR CONSTRUCTION	DD	05/08/24

SHEET TITLE:
EQUIPMENT DETAILS

SHEET NUMBER:
A4.1

MANUFACTURER: RAYCAP
MODEL: MOUNTING BRACKET

INCLUDED WITH RAYCAP SPD.

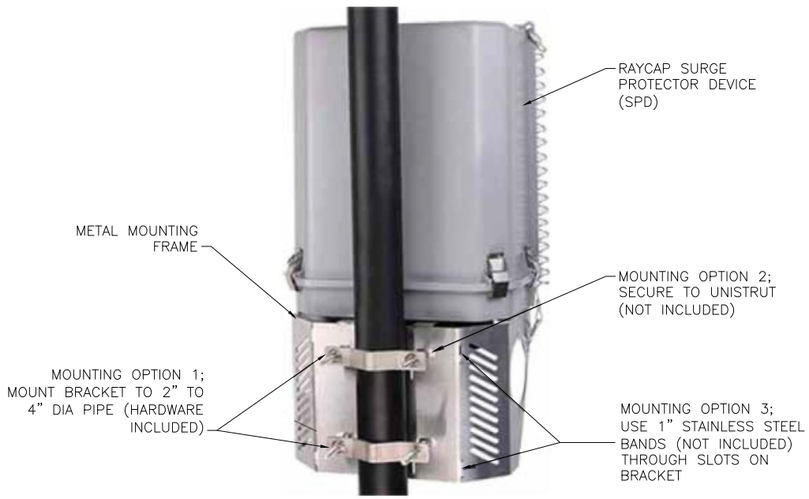

1 RAYCAP SURGE PROTECTOR DEVICE (SPD) MOUNT

SCALE: N.T.S.

MANUFACTURER: ERICSSON
MODEL: SXK 109 1973/2
WEIGHT: 3.75 LBS

BRACKET FOR ATTACHING TWO STANDARD OR HEAVY ERS UNITS WITH A HOLE PATTERN OF CC 30 MM AND/OR CC 80 MM., EITHER TO A POLE, WALL, ANGLE TOWER OR SQUARE TUBE.

BOLTS FOR ATTACHING TWO ERS UNITS ARE SUPPLIED IN THE PACKAGE.

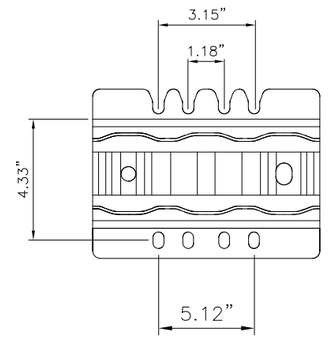

PLATE MOUNTING PATTERN

DUAL RADIO ATTACHMENT

ISOMETRIC VIEW

2 DUAL ERS BRACKET

SCALE: N.T.S.

MANUFACTURER: ERICSSON
MODEL: SXK 109 2064/1 (SWIVEL ANGLE)
SXK 109 2065/1 (SWIVEL ANGLE AND TILT ANGLE)
WEIGHT: 9.7 LBS. (SWIVEL ANGLE)
13.0 LBS. (SWIVEL ANGLE AND TILT ANGLE)

POLE	CIRCULAR	SQUARE	90° ANGLE
MIN. OUTER DIMENSION	3" DIA.	2" x 2"	2" x 2"
MAX. OUTER DIMENSION	4.5" DIA.	3.15" x 3.15"	3.15" x 3.15"

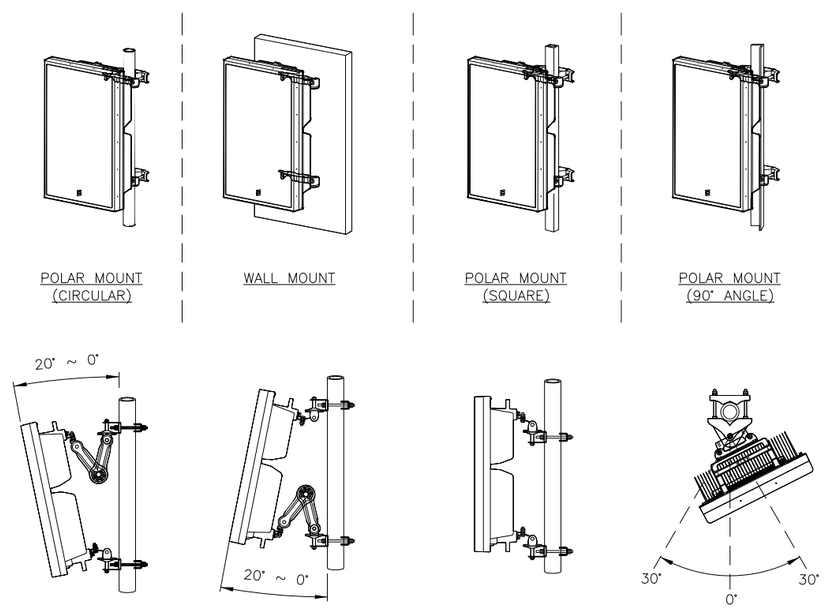

3 ERICSSON SWIVEL MOUNT KIT

SCALE: N.T.S.

PREPARED FOR:

verizon

CHICAGO SMSA LIMITED PARTNERSHIP
D/B/A VERIZON WIRELESS
1701 GOLF ROAD
TOWER 2, SUITE 400
ROLLING MEADOWS, IL 60008

SITE NAME:
WHITEWATER SOUTH
SITE NUMBER:
765538

SITE ADDRESS:
797 INDIAN MOUND PARKWAY
WHITEWATER, WI 53190
WALWORTH COUNTY

STAMP:

WISCONSIN
LUIS MENDOZA
E-49916
LADERA RANCH
CALIFORNIA
PROFESSIONAL ENGINEER

05/08/24

MOUNTAIN, LTD.
ENGINEERING

DRAWN BY:	DP
APPROVED BY:	LM
DATE DRAWN:	04/30/24

REVISION

NO	DESCRIPTION	BY	DATE
A	ISSUED FOR REVIEW	DP	05/06/24
0	ISSUED FOR CONSTRUCTION	DD	05/08/24

SHEET TITLE:
EQUIPMENT DETAILS

SHEET NUMBER:
A4.2

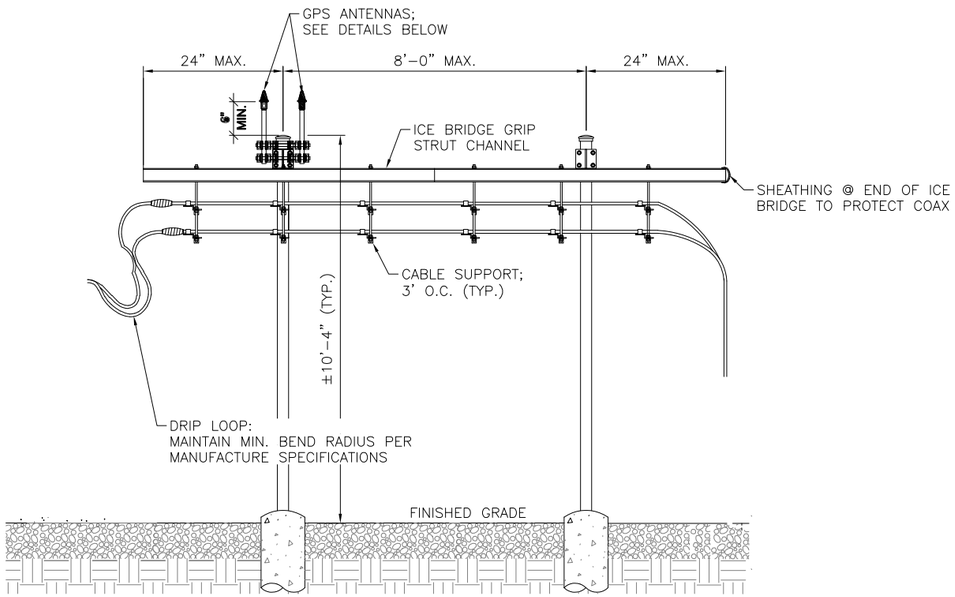

1 ICE BRIDGE INSTALLATION

SCALE: N.T.S.

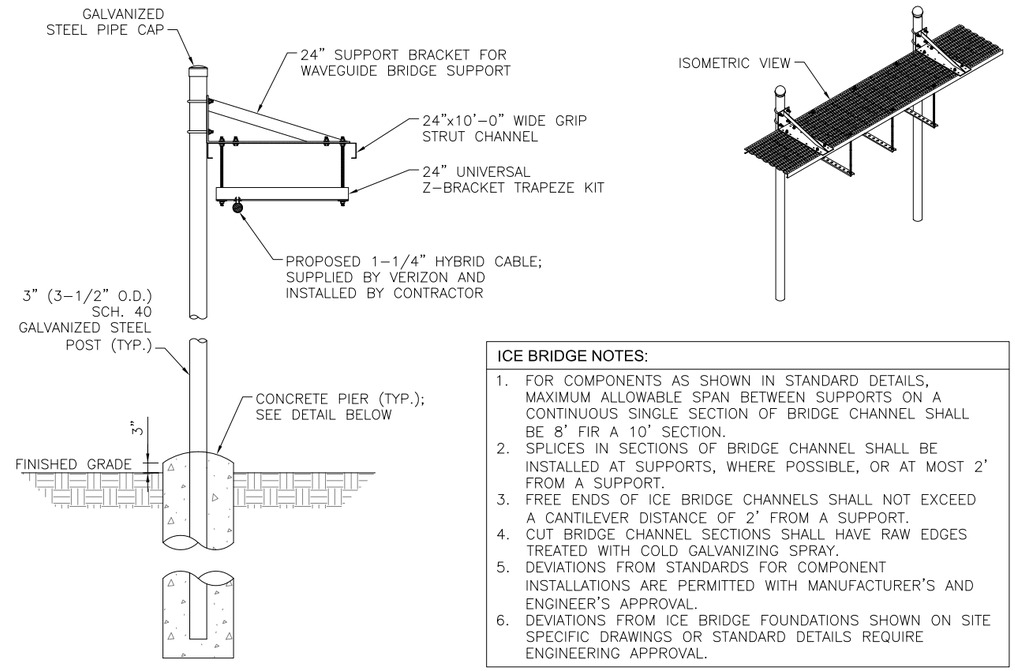

ICE BRIDGE NOTES:

1. FOR COMPONENTS AS SHOWN IN STANDARD DETAILS, MAXIMUM ALLOWABLE SPAN BETWEEN SUPPORTS ON A CONTINUOUS SINGLE SECTION OF BRIDGE CHANNEL SHALL BE 8' FIR A 10' SECTION.
2. SPLICES IN SECTIONS OF BRIDGE CHANNEL SHALL BE INSTALLED AT SUPPORTS, WHERE POSSIBLE, OR AT MOST 2' FROM A SUPPORT.
3. FREE ENDS OF ICE BRIDGE CHANNELS SHALL NOT EXCEED A CANTILEVER DISTANCE OF 2' FROM A SUPPORT.
4. CUT BRIDGE CHANNEL SECTIONS SHALL HAVE RAW EDGES TREATED WITH COLD GALVANIZING SPRAY.
5. DEVIATIONS FROM STANDARDS FOR COMPONENT INSTALLATIONS ARE PERMITTED WITH MANUFACTURER'S AND ENGINEER'S APPROVAL.
6. DEVIATIONS FROM ICE BRIDGE FOUNDATIONS SHOWN ON SITE SPECIFIC DRAWINGS OR STANDARD DETAILS REQUIRE ENGINEERING APPROVAL.

2 ICE BRIDGE

SCALE: N.T.S.

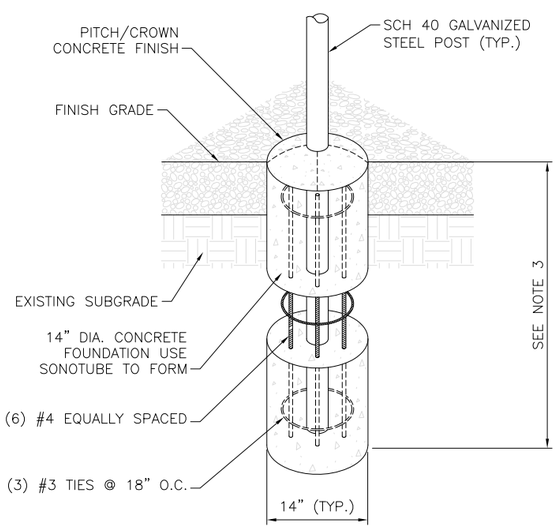

NOTES:

1. MAINTAIN 3" MINIMUM REBAR COVER WITH CONCRETE IN ALL DIRECTIONS.
2. CONCRETE MIX TO BE 4,000 PSI @ 28 DAYS.
3. FOUNDATION DEPTH TO EXCEED LOCAL FROST DEPTH, OR 48" MINIMUM.

3 PIER FOUNDATION

SCALE: N.T.S.

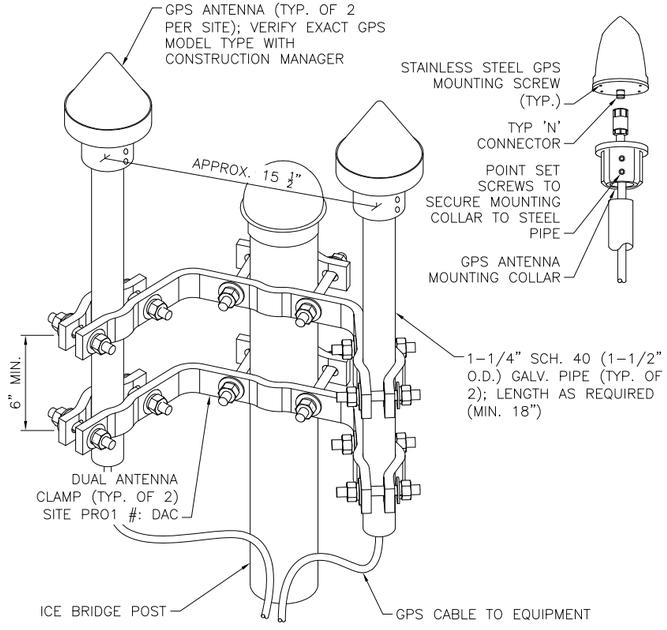

4 GPS ANTENNA MOUNTING

SCALE: N.T.S.

5 NOT USED

SCALE: N.T.S.

PREPARED FOR:

verizon

CHICAGO SMSA LIMITED PARTNERSHIP
D/B/A VERIZON WIRELESS
1701 GOLF ROAD
TOWER 2, SUITE 400
ROLLING MEADOWS, IL 60008

SITE NAME:
WHITEWATER SOUTH
SITE NUMBER:
765538

SITE ADDRESS:
797 INDIAN MOUND PARKWAY
WHITEWATER, WI 53190
WALWORTH COUNTY

STAMP:

WISCONSIN
LUIS MENDOZA
E-49916
LADERA RANCH
CALIFORNIA
PROFESSIONAL ENGINEER

05/08/24

MOUNTAIN, LTD.
ENGINEERING

DRAWN BY:	DP
APPROVED BY:	LM
DATE DRAWN:	04/30/24

REVISION

NO	DESCRIPTION	BY	DATE
A	ISSUED FOR REVIEW	DP	05/06/24
0	ISSUED FOR CONSTRUCTION	DD	05/08/24

SHEET TITLE:
ICE BRIDGE AND GPS DETAILS

SHEET NUMBER:
A4.3

MANUFACTURER: CHARLES
MODEL: CUBE-PM639158N2
DIMENSIONS: 74"x32"x32" (HxWxD)
WEIGHT: 350 LBS (AS SHIPPED)
RACK SPACE: 62.25" (39 RU)
COLOR: OFF-WHITE
MATERIAL: 0.125" ALUMINUM
OPERATING TEMP. (INSIDE ENCLOSURE): -40°F (-40°C) TO 149°F (65°C)
OPERATING TEMP. (OUTSIDE ENCLOSURE): -40°F (-40°C) TO 115°F (46°C)

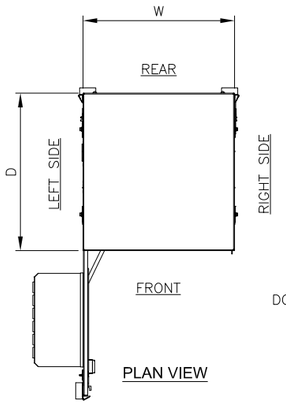

PLAN VIEW

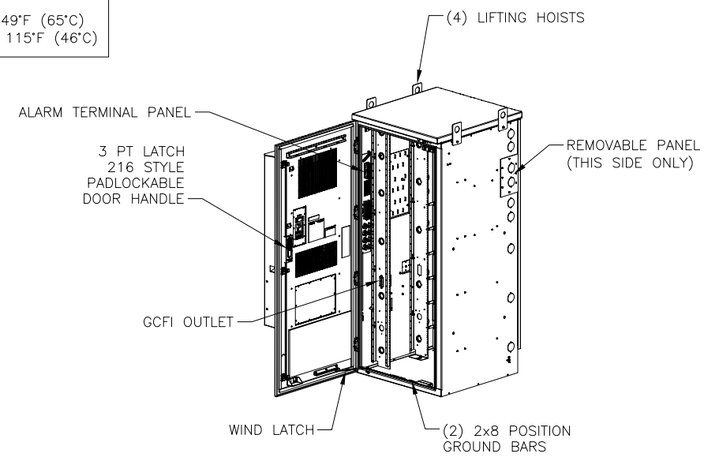

FRONT ISOMETRIC VIEW

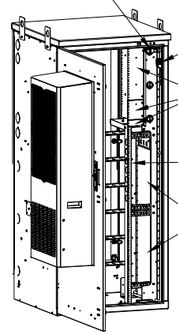

FRONT ISOMETRIC VIEW

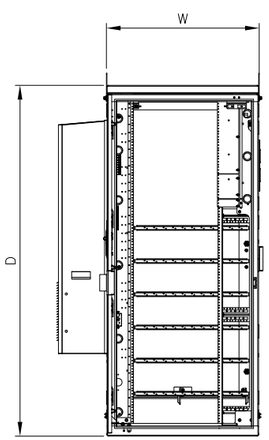

PLAN VIEW

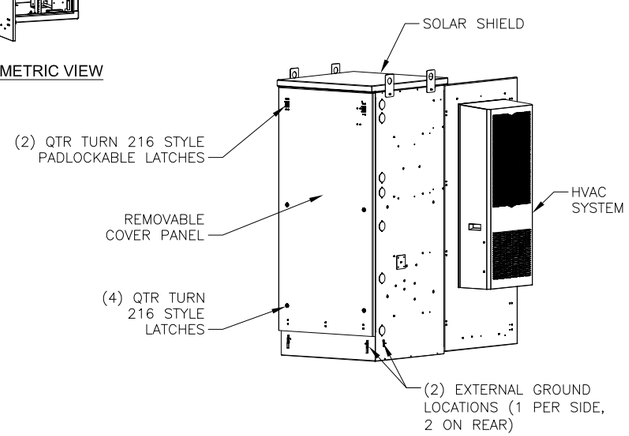

REAR ISOMETRIC VIEW

NOTE:
VERIFY EXACT CABINET MODEL WITH
VERIZON CONSTRUCTION MANAGER

1 EQUIPMENT CABINET
SCALE: N.T.S.

MANUFACTURER: RAYCAP
MODEL: RCMDC-4520-RM-48
DIMENSIONS: 5.18"x18.32"x15.80" (HxWxD)
WEIGHT: 22.10 LBS
RACK SPACE: 3 RU

RACK MOUNTED DISTRIBUTION SURGE PROTECTION
FOR (12) RRH DC CIRCUITS.

REAR VIEW

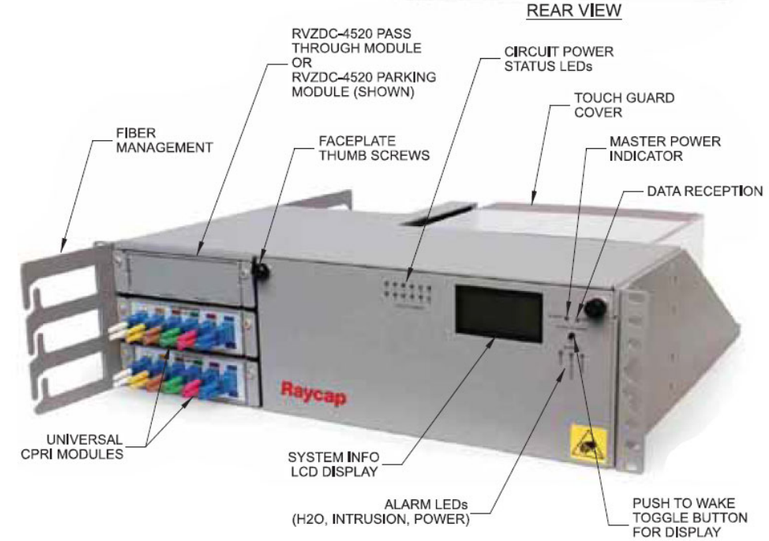

FRONT ISOMETRIC VIEW

2 RACK MOUNTED SURGE PROTECTION
SCALE: N.T.S.

PREPARED FOR:

verizon

CHICAGO SMSA LIMITED PARTNERSHIP
D/B/A VERIZON WIRELESS
1701 GOLF ROAD
TOWER 2, SUITE 400
ROLLING MEADOWS, IL 60008

SITE NAME:
WHITEWATER SOUTH
SITE NUMBER:
765538

SITE ADDRESS:
797 INDIAN MOUND PARKWAY
WHITEWATER, WI 53190
WALWORTH COUNTY

STAMP:

WISCONSIN
LUIS MENDOZA
E-49916
LADERA RANCH
CALIFORNIA
PROFESSIONAL ENGINEER
05/08/24

MOUNTAIN, LTD.
ENGINEERING

DRAWN BY:	DP
APPROVED BY:	LM
DATE DRAWN:	04/30/24

REVISION

NO	DESCRIPTION	BY	DATE
A	ISSUED FOR REVIEW	DP	05/06/24
0	ISSUED FOR CONSTRUCTION	DD	05/08/24

SHEET TITLE:
GROUND EQUIPMENT SPECIFICATIONS

SHEET NUMBER:
A4.4

MANUFACTURER: CHARLES
MODEL: CUBE-BB48E2QVA
DIMENSIONS: 74"x32"x33" (HxWxD)
WEIGHT: 743 LBS (AS SHIPPED)
COLOR: OFF-WHITE
MATERIAL: 0.125" ALUMINUM

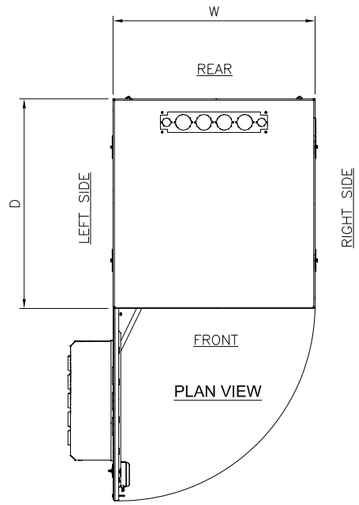

PLAN VIEW

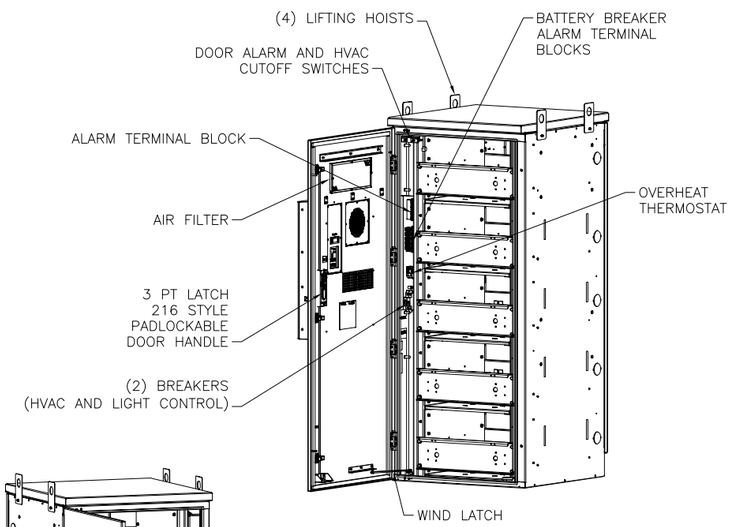

FRONT ISOMETRIC VIEW

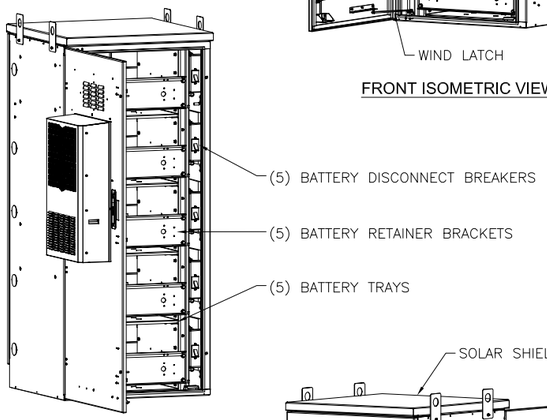

FRONT ISOMETRIC VIEW

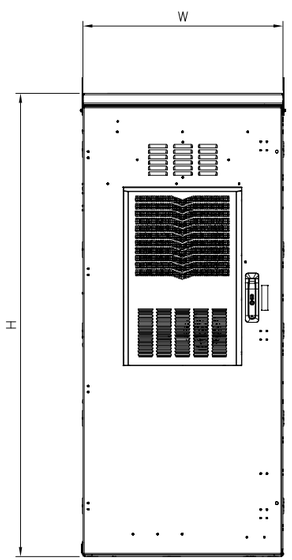

FRONT VIEW

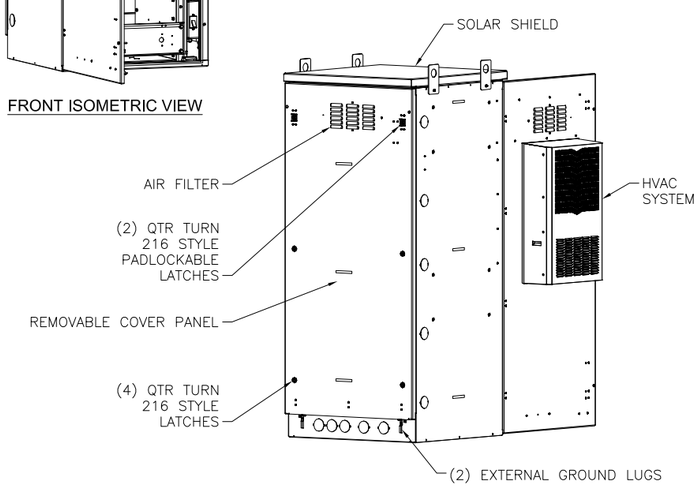

REAR ISOMETRIC VIEW

NOTE: VERIFY EXACT CABINET MODEL WITH VERIZON CONSTRUCTION MANAGER

1 BATTERY CABINET
SCALE: N.T.S.

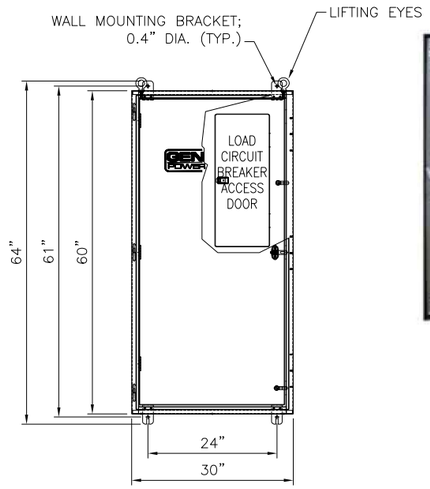

FRONT VIEW

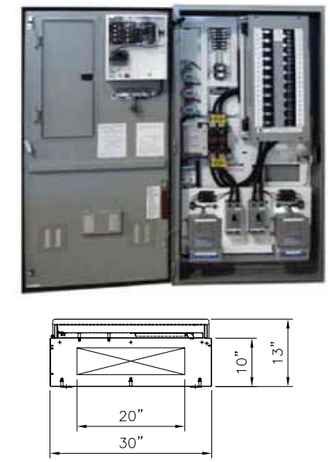

BOTTOM VIEW

ILC RATED AMPS	VOLTAGE	PHASE	ENCLOSURE HEIGHT	ENCLOSURE WIDTH	ENCLOSURE DEPTH	WEIGHT
200	120/240	1	60"	30"	10"	350 LBS
200	120/240	3	60"	30"	10"	350 LBS

2 INTEGRATED LOAD CENTER
SCALE: N.T.S.

MANUFACTURER: CHARLES INDUSTRIES
MODEL: CUBE-RL1003
DIMENSIONS: 26.3"x22.1"x20.0" (HxWxD)
RACK SPACE: 14RU

ACCESSORIES:
POLE MOUNT KIT: 97-CABPMKIT
H-FRAME HARDWARE KIT: 97-001971-A
SLIDE OUT TRAY: 97-001990-A
10" PLINTH KIT: 97-002127-A

SHOWN WITH OPTIONAL SLIDE OUT TRAY

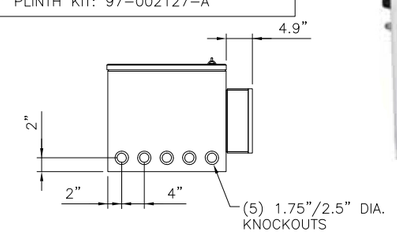

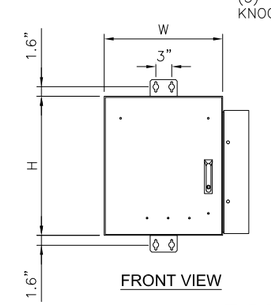

FRONT VIEW

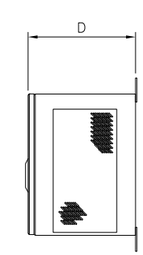

SIDE VIEW

3 FIBER ENCLOSURE
SCALE: N.T.S.

PREPARED FOR:

verizon

CHICAGO SMSA LIMITED PARTNERSHIP
D/B/A VERIZON WIRELESS
1701 GOLF ROAD
TOWER 2, SUITE 400
ROLLING MEADOWS, IL 60008

SITE NAME:
WHITEWATER SOUTH
SITE NUMBER:
765538

SITE ADDRESS:
797 INDIAN MOUND PARKWAY
WHITEWATER, WI 53190
WALWORTH COUNTY

STAMP:

WISCONSIN
LUIS MENDOZA
E-49916
LADERA RANCH
CALIFORNIA
PROFESSIONAL ENGINEER
05/08/24

MOUNTAIN, LTD.
ENGINEERING

DRAWN BY:	DP
APPROVED BY:	LM
DATE DRAWN:	04/30/24

REVISION

NO	DESCRIPTION	BY	DATE
A	ISSUED FOR REVIEW	DP	05/06/24
0	ISSUED FOR CONSTRUCTION	DD	05/08/24

SHEET TITLE:
GROUND EQUIPMENT SPECIFICATIONS

SHEET NUMBER:
A4.5

MANUFACTURER: COMMSCOPE
MODEL: CMC74-36E
DIMENSIONS: 74"x37"x36" (HxWxD)
WEIGHT: 701 LBS (AS SHIPPED)
COLOR: RAL7035 GRAY
MATERIAL: 2.5MM ALUMINUM

EQUIPMENT AND POWER CABINET WITH 4kW THERMOSIPHON

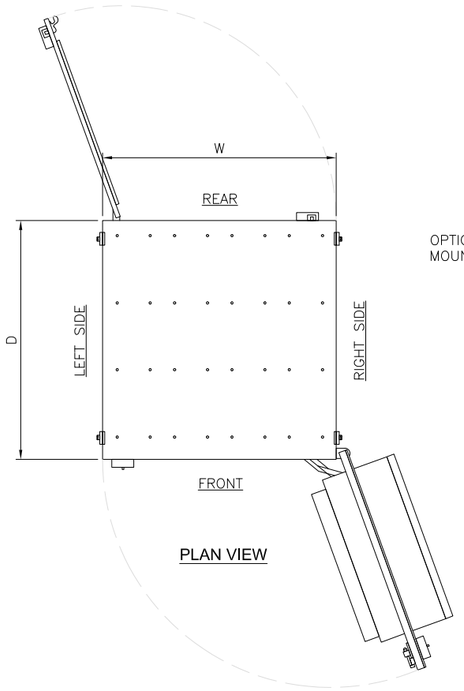

PLAN VIEW

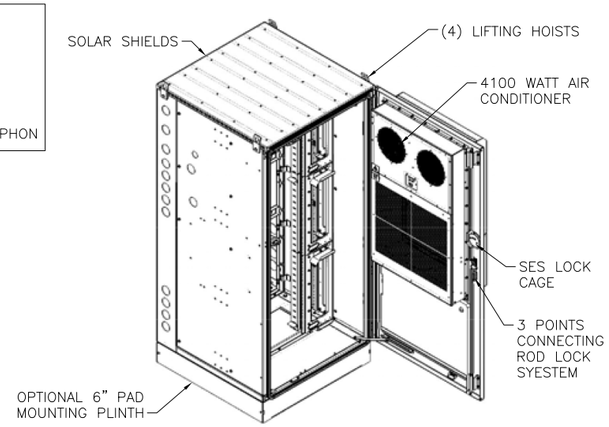

FRONT ISOMETRIC VIEW

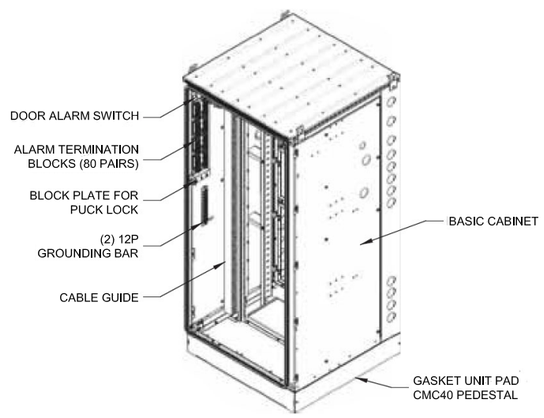

FRONT ISOMETRIC VIEW

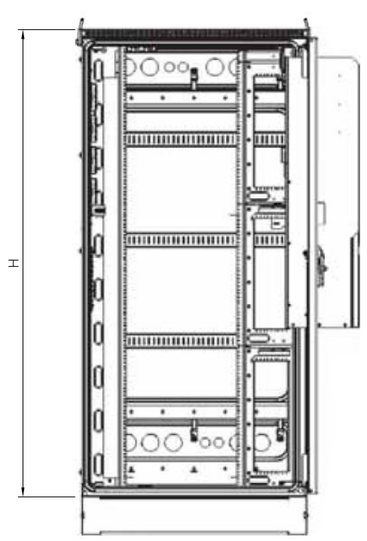

FRONT VIEW

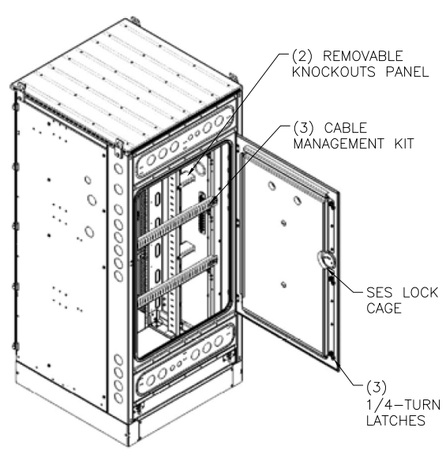

REAR ISOMETRIC VIEW

1 EQUIPMENT CABINET

SCALE: N.T.S.

NOTE:
VERIFY EXACT CABINET MODEL WITH VERIZON CONSTRUCTION MANAGER

MANUFACTURER: COMMSCOPE
MODEL: CMC74-36B
DIMENSIONS: 74.9"x37.5"x36" (HxWxD) - FOOTPRINT

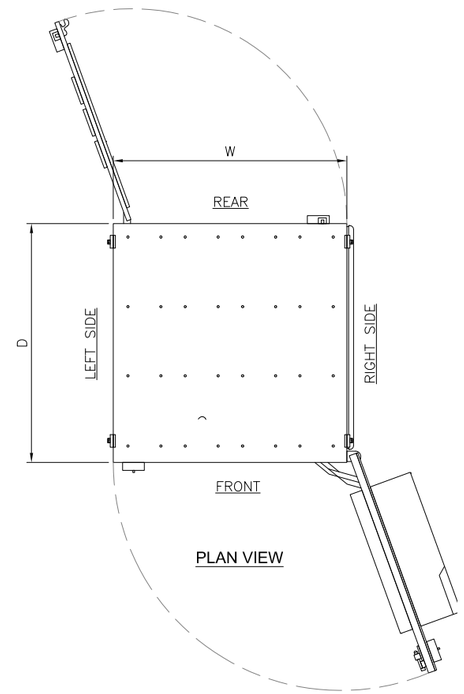

PLAN VIEW

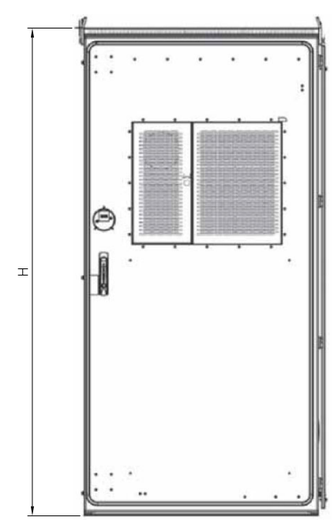

FRONT VIEW

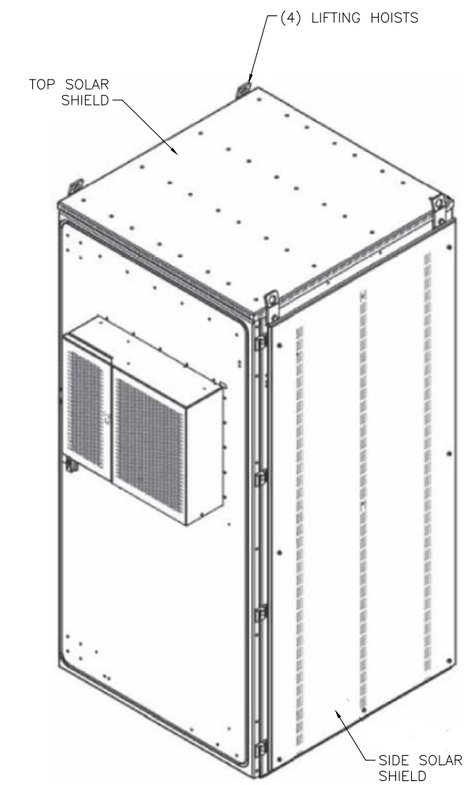

2 BATTERY CABINET

SCALE: N.T.S.

PREPARED FOR:

verizon

CHICAGO SMSA LIMITED PARTNERSHIP
D/B/A VERIZON WIRELESS
1701 GOLF ROAD
TOWER 2, SUITE 400
ROLLING MEADOWS, IL 60008

SITE NAME:
WHITEWATER SOUTH
SITE NUMBER:
765538

SITE ADDRESS:
797 INDIAN MOUND PARKWAY
WHITEWATER, WI 53190
WALWORTH COUNTY

STAMP:

WISCONSIN
LUIS MENDOZA
E-49916
LADERA RANCH
CALIFORNIA
PROFESSIONAL ENGINEER

05/08/24

MOUNTAIN, LTD.
ENGINEERING

DRAWN BY:	DP
APPROVED BY:	LM
DATE DRAWN:	04/30/24

REVISION

NO	DESCRIPTION	BY	DATE
A	ISSUED FOR REVIEW	DP	05/06/24
0	ISSUED FOR CONSTRUCTION	DD	05/08/24

SHEET TITLE:
GROUND EQUIPMENT SPECIFICATIONS

SHEET NUMBER:
A4.6

FOR REFERENCE ONLY

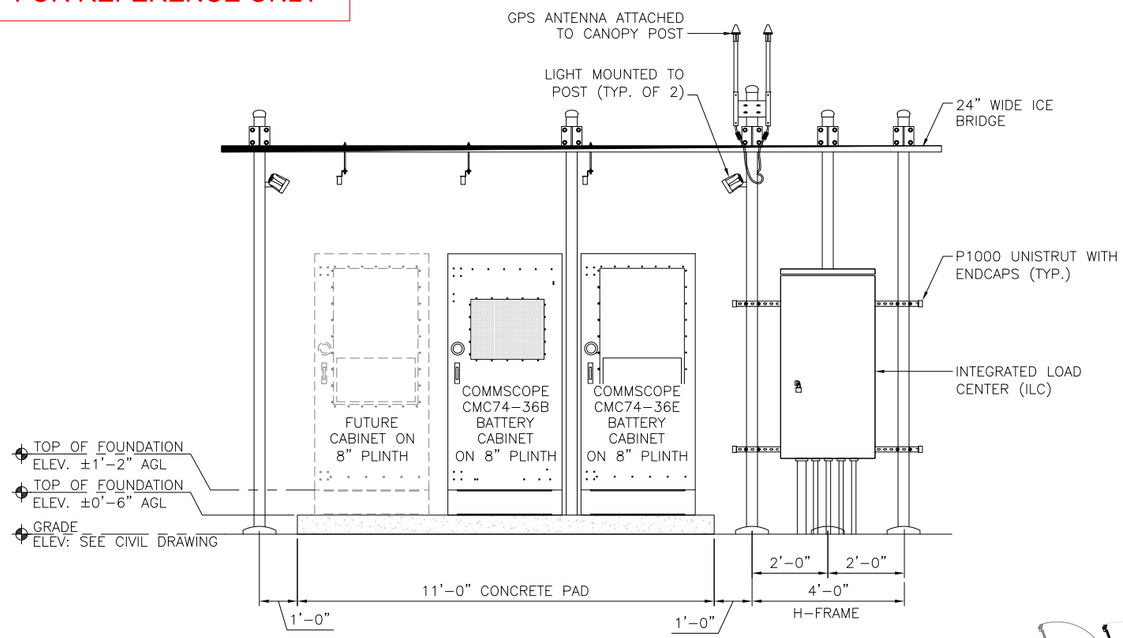

1 FRONT ELEVATION
SCALE: N.T.S.

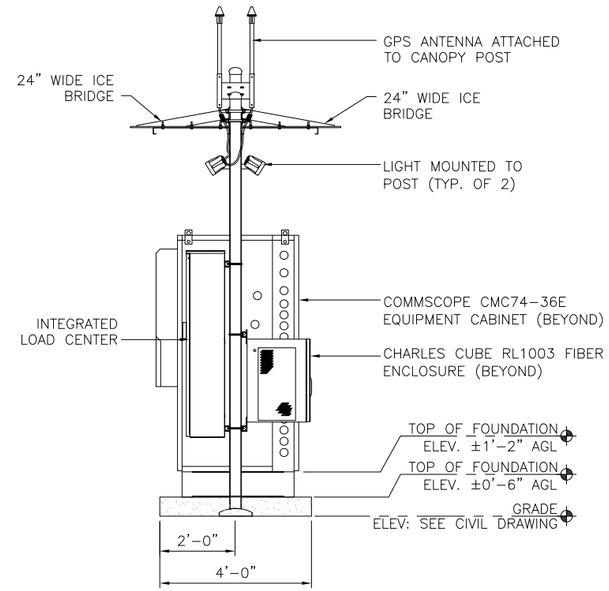

2 RIGHT SIDE ELEVATION
SCALE: N.T.S.

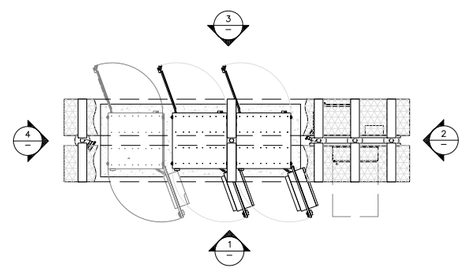

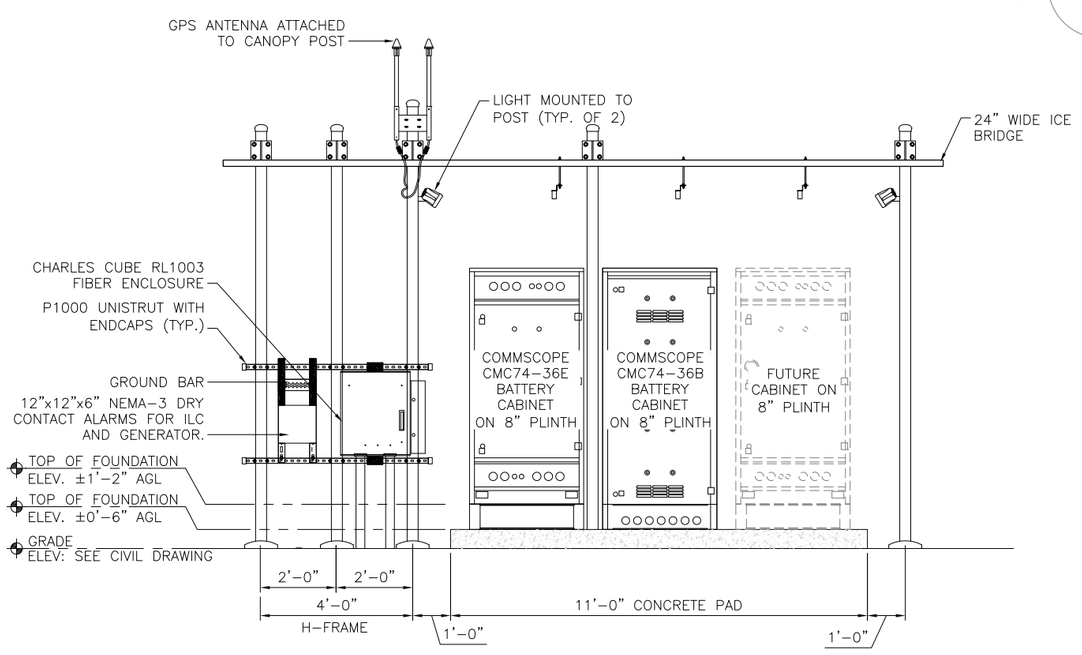

3 REAR SIDE ELEVATION
SCALE: N.T.S.

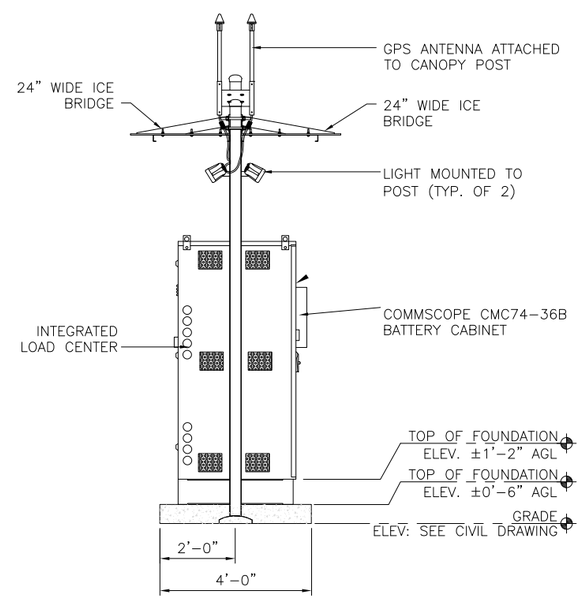

4 LEFT SIDE ELEVATION
SCALE: N.T.S.

PREPARED FOR:

verizon

CHICAGO SMSA LIMITED PARTNERSHIP
D/B/A VERIZON WIRELESS
1701 GOLF ROAD
TOWER 2, SUITE 400
ROLLING MEADOWS, IL 60008

SITE NAME:
WHITEWATER SOUTH
SITE NUMBER:
765538

SITE ADDRESS:
797 INDIAN MOUND PARKWAY
WHITEWATER, WI 53190
WALWORTH COUNTY

STAMP:

WISCONSIN
LUIS MENDOZA
E-49916
LADERA RANCH
CALIFORNIA
PROFESSIONAL ENGINEER
05/08/24

MOUNTAIN, LTD.
ENGINEERING

DRAWN BY:	DP
APPROVED BY:	LM
DATE DRAWN:	04/30/24

REVISION

NO	DESCRIPTION	BY	DATE
A	ISSUED FOR REVIEW	DP	05/06/24
0	ISSUED FOR CONSTRUCTION	DD	05/08/24

SHEET TITLE:
EQUIPMENT PAD ELEVATIONS

SHEET NUMBER:
A4.7

NOTE:
1. ALL CONCRETE CONSTRUCTION SHALL BE IN COMPLIANCE WITH THE AMERICAN CONCRETE INSTITUTE – ACI 318 BUILDING CODE REQUIREMENTS FOR STRUCTURAL CONCRETE, AND ACI 301 INDUSTRY SPECIFICATION FOR STRUCTURAL CONCRETE.
2. ALL CONCRETE WORK SHALL BE PERFORMED IN ACCORDANCE WITH ACI301, ACI318, ACI336, ASTM A184, ASTM A185, AND THE DESIGN AND CONSTRUCTION SPECIFICATION FOR COST–IN–PLACE CONCRETE.
3. MINIMUM ALLOWABLE CONCRETE COMPRESSIVE STRENGTH SHALL BE 4000 PSI AT 28 DAYS WHEN TESTED IN ACCORDANCE WITH THE AMERICAN SOCIETY FOR TESTING AND MATERIALS METHODS STANDARDS ASTM C172, ASTM C31, AND ASTM C39 UNLESS NOTED OTHERWISE.
4. REINFORCING STEEL SHALL CONFORM TO ASTM A615, GRADE 60 KSI DEFORMED BAR UNLESS NOTED OTHERWISE. WELDING WIRE FABRIC SHALL CONFORM TO ASTM A185 WELDED STEEL WIRE FABRIC. SPLICES SHALL BE CLASS "B" AND ALL HOOKS SHALL BE STANDARD.
5. REINFORCING STEEL SHALL BE ACCURATELY PLACED AND ADEQUATELY SECURED IN POSITION. LOCATION OF REINFORCEMENT SHALL BE AS INDICATED ON THE DRAWINGS. CONCRETE COVER SHALL BE AS SHOWN.
6. TOP OF FOUNDATION TO HAVE A "BRUSH FINISH".
7. EXPOSED FINISHED SURFACE IS NOT TO HOLD WATER.
8. ALL SURFACES ARE TO BE CLEANED OF ANY RESIDUAL CONCRETE FROM SPLASHING OR SPILLS.

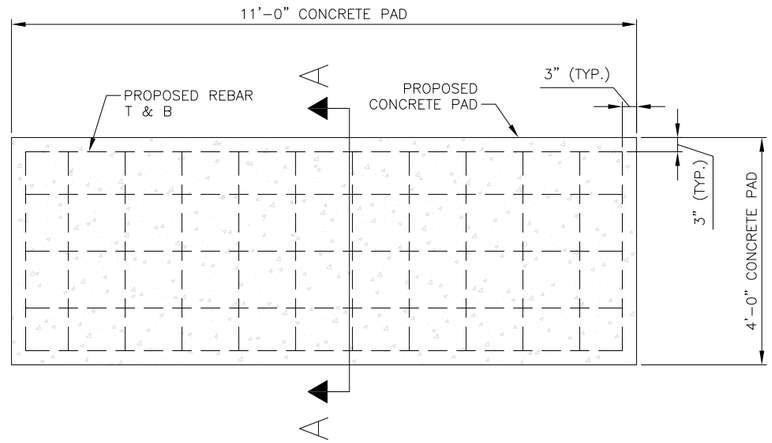

PLAN VIEW

NOTE:
1. SLAB TO BE LEVEL (±) 1/4"
2. FOUNDATION SHALL HAVE A MINIMUM 4" PROJECTION ABOVE GRADE.
3. CONCRETE STRENGTH SHALL BE A MINIMUM OF 4000 PSI @ 28DAYS
4. REPLACE OR IMPROVE THE EXISTING SOIL WITHIN THE BASE IF IT CONTAINS NON–GRANULAR, WET, ORGANIC, OR NON–COMPACTABLE MATERIALS BEFORE ATTEMPTING TO PROCEED TO COMPACTION.
5. THE EXISTING SUB–BASE SHALL BE FIELD REVIEWED TO QUALIFY AS UNDISTURBED & NON–ORGANIC STRATUM TO RESIST MINIMUM 500 PSF GRAVITY LOAD WITHOUT DIFFERENTIAL SETTLEMENT.
6. IF THE FIELD REVIEW OF THE LOCAL SOIL INDICATES FILL OR SUB–STANDARD SOIL MATERIAL WITHIN BASE OR SUB–BASE, THE CONTRACTOR SHALL EXTEND EXCAVATION TO A DEPTH WHERE THE NATURAL SOIL CAN BE REACHED. THEN WILL REPLACE THE EXISTING WITH WELL GRADED STRUCTURAL FILL TO BE COMPACTED AS INDICATED.
7. THE FOUNDATION CONSTRUCTION WORK SHALL BE COORDINATED AND APPROVED BY THE JURISDICTION & THE PROJECT OWNER AS APPLICABLE.
8. IN LIEU OF THE PROPER SOIL INVESTIGATION AND GEOTECHNICAL RECOMMENDATIONS THAT ARE FOLLOWED BY THE CONSTRUCTION, A NOMINAL DIFFERENTIAL SETTLEMENT MAY BE EXPECTED.

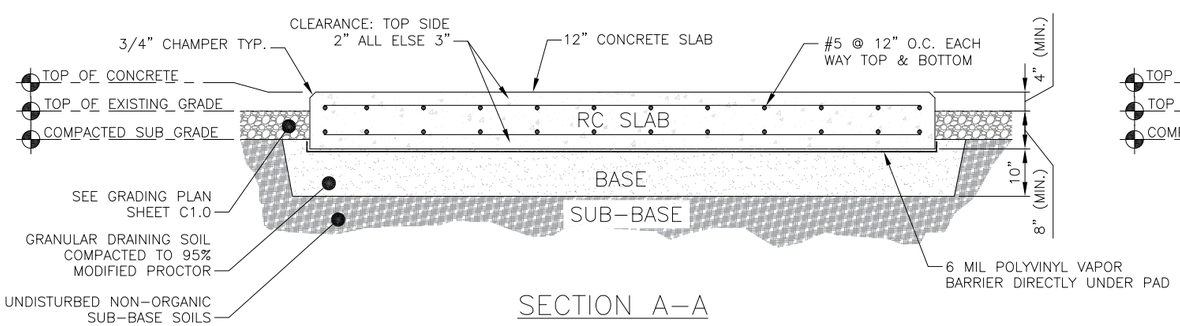

SECTION A–A

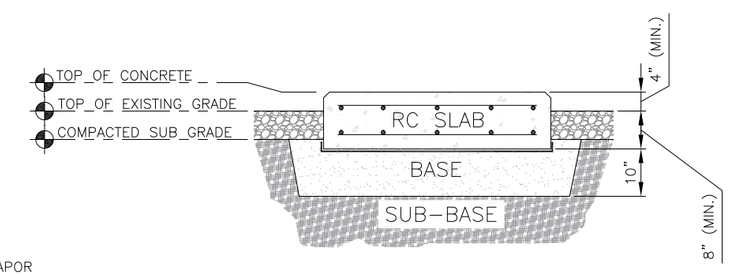

SIDE VIEW

1 EQUIPMENT PAD FOUNDATION
SCALE: N.T.S.

PREPARED FOR:

verizon

CHICAGO SMSA LIMITED PARTNERSHIP
D/B/A VERIZON WIRELESS
1701 GOLF ROAD
TOWER 2, SUITE 400
ROLLING MEADOWS, IL 60008

SITE NAME:
WHITEWATER SOUTH
SITE NUMBER:
765538
SITE ADDRESS:
797 INDIAN MOUND PARKWAY
WHITEWATER, WI 53190
WALWORTH COUNTY

STAMP:

WISCONSIN
LUIS MENDOZA
E-49916
LADERA RANCH
CALIFORNIA
PROFESSIONAL ENGINEER
05/08/24

MOUNTAIN, LTD.
ENGINEERING

DRAWN BY:	DP
APPROVED BY:	LM
DATE DRAWN:	04/30/24

REVISION

NO	DESCRIPTION	BY	DATE
A	ISSUED FOR REVIEW	DP	05/06/24
0	ISSUED FOR CONSTRUCTION	DD	05/08/24

SHEET TITLE:
EQUIPMENT PAD DETAILS

SHEET NUMBER:
A4.8

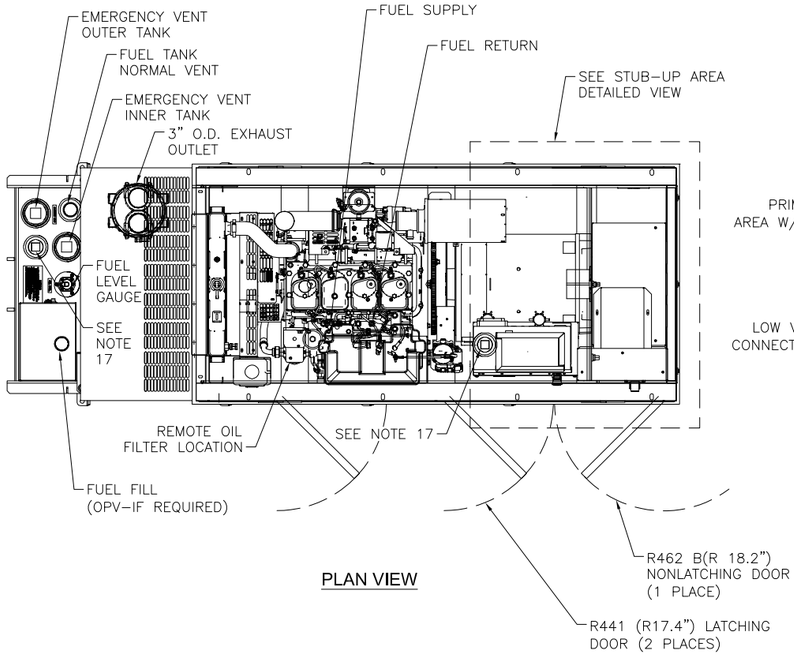

PLAN VIEW

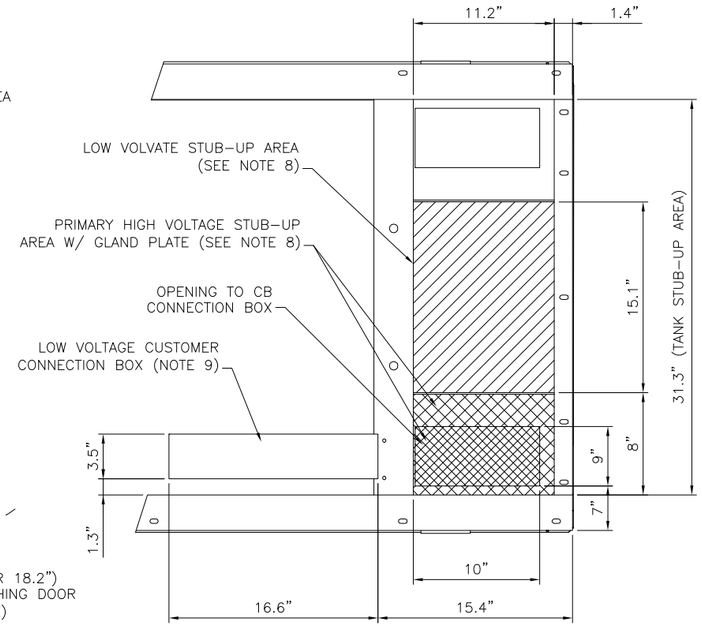

STUB-UP AREA DETAILED VIEW

NOTES:

1. CONTROL PANEL W/ BATTERY CHARGER. THREE PRONG CORD COMING OUT CONTROL PANEL IS FOR THE BATTERY CHARGER.
2. 1500W 120VAC ENGINE BLOCK HEATER WITH CORD.
3. 12 VOLT NEGATIVE GROUND SYSTEM.
4. OPTIONAL REMOTE EMERGENCY STOP SHIPPED LOOSE WITH GENERATOR.
5. GENERATOR MUST BE GROUNDED.
6. CENTER OF GRAVITY & WEIGHT MAY SHIFT SLIGHTLY DUE TO UNIT OPTIONS.
7. STUB-UP: BASE TANK REQUIRES ALL STUB-UPS TO BE IN THE REAR TANK STUB-UP AREA.
8. HIGH VOLTAGE STUB-UP AREA INCLUDES THE AC LOAD LEAD CONNECTION TO THE MAIN LINE CIRCUIT BREAKER (MLCB), THE NEUTRAL CONNECTION, AND AUXILIARY 120/240V CONNECTION.
9. CONNECTION POINTS FOR CONTROL WIRES. BOTTOM OF LOW VOLTAGE CUSTOMER CONNECTION BOX HAS KNOCKOUTS FOR 1/2" AND 3/4" CONDUIT FITTINGS.
10. MUST ALLOW FREE FLOW OF DISCHARGE AIR AND EXHAUST. SEE SPEC SHEET FOR MINIMUM AIR FLOW AND MAXIMUM RESTRICTION REQUIREMENTS.
11. MUST ALLOW FREE FLOW OF INTAKE AIR. SEE SPEC SHEET FOR MAXIMUM AIR FLOW AND MAXIMUM RESTRICTION REQUIREMENTS.
12. ENCLOSED SETS-GENERATOR SET MUST BE INSTALLED SUCH THAT DISCHARGE AIR IS NOT RECIRCULATED.
13. IT IS THE RESPONSIBILITY OF THE INSTALLATION TECHNICIAN TO ENSURE THAT THE GENERATOR INSTALLATION COMPLIES WITH APPLICABLE CODES, STANDARDS, AND REGULATION.
14. 190 GALLON USEABLE CAPACITY BASE TANK.
15. UNIT IS SHIPPER WITH FUEL SUPPLY AND RETURN LINES DISCONNECTED AND PLUGGED BETWEEN ENGINE AND FUEL TANK. THIS HAS BEEN DONE TO FACILITATE PRESSURE TESTING OF THE TANK IN THE FIELD. FOR INFORMATION REGARDING CONNECTING THE FUEL SUPPLY AND RETURN LINES PRIOR TO START UP, SEE THE FUEL TANK FIELD TESTING PROCEDURE (0E5082) SUPPLIED IN THE TANK LOOSE VENTS KIT, WHICH IS SHIPPED WITH THIS GENERATOR.
16. SEE DRAWINGS 0C3850 FOR DUCT REMOVAL. REMOVAL OF FRONT DUCT WILL PROVIDE ACCESS TO MUFFLER FOR SERVICING.
17. ADDITIONAL 2" FEMALE NPT PORTS-PLUGGED OR EQUIPPED WITH TOP-MOUNT SWITCHED DEPENDING ON UNIT OPTIONS.

RECOMMENDED ELECTRICAL STUB-UPS
(SEE DETAILED VIEW & TOP VIEW)

DESCRIPTION	INSIDE BASE
HIGH VOLTAGE STUB-UP AREA 1) AC LOAD LEAD CONDUIT AREA. 2) 120/240 VAC FROM UTILITY FOR OPTIONAL LOADS SUCH AS GFCI OUTLET, BLOCK HEATER, BATTERY CHARGER, AND OTHER 120/240 VAC OPTIONS. (GLAND PLATE INCLUDED)	
LOW VOLTAGE STUB-UP AREA 1) TRANSFER SWITCH/COMMUNICATION CONDUITS. COMMUNICATIONS AND 2-WIRE START MUST NOT BE RUN IN CONDUIT WITH AC WIRING (SEE NOTE 9)	

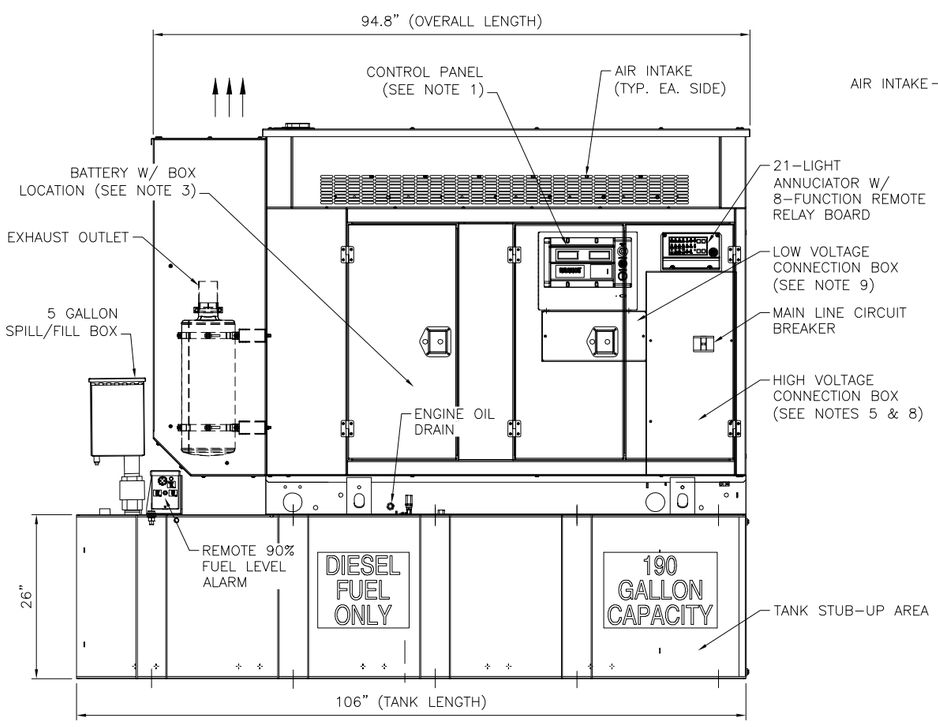

LEFT SIDE VIEW

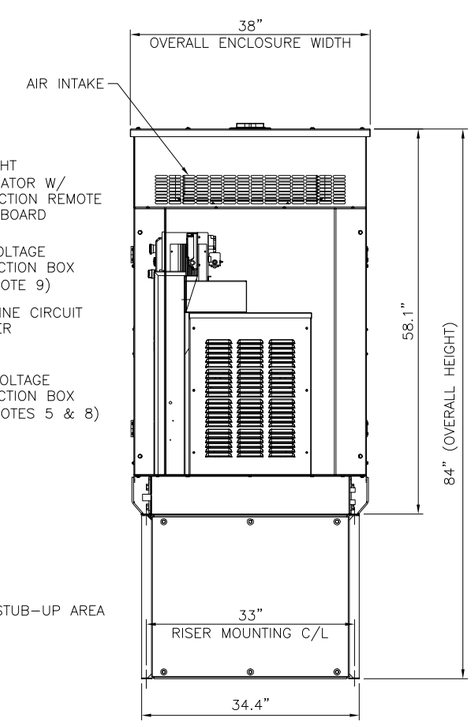

REAR VIEW

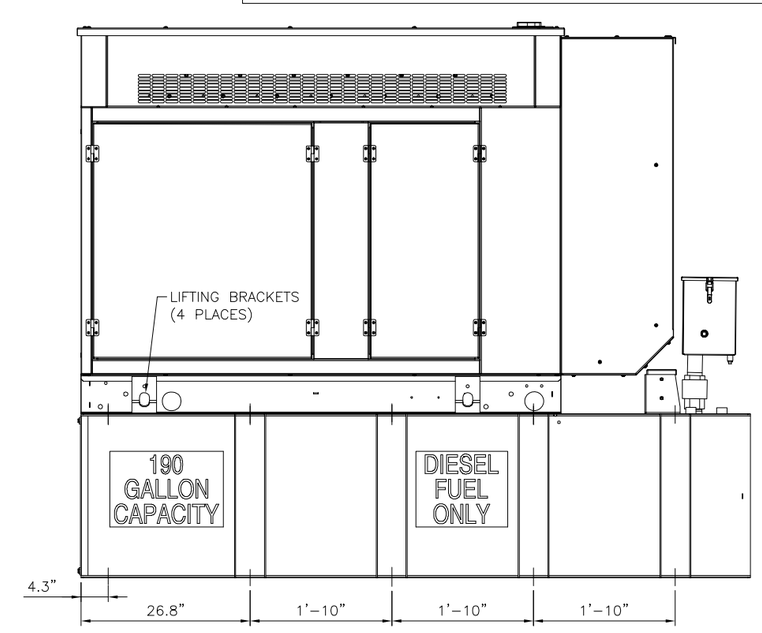

RIGHT SIDE VIEW

1 SD030 30KW 2.2L GENERAC DIESEL GENERATOR

SCALE: N.T.S.

WEIGHT DATA (INCLUDES WOODEN SHIPPING SKID):
ENCLOSED GENERATOR WITH EMPTY FUEL TANK: 1511 KG (3331 LBS)

PREPARED FOR:

verizon

CHICAGO SMSA LIMITED PARTNERSHIP
D/B/A VERIZON WIRELESS
1701 GOLF ROAD
TOWER 2, SUITE 400
ROLLING MEADOWS, IL 60008

SITE NAME:
WHITEWATER SOUTH
SITE NUMBER:
765538

SITE ADDRESS:
797 INDIAN MOUND PARKWAY
WHITEWATER, WI 53190
WALWORTH COUNTY

STAMP:

WISCONSIN
LUIS MENDOZA
E-49916
LADERA RANCH
CALIFORNIA
PROFESSIONAL ENGINEER

05/08/24

MOUNTAIN, LTD.
ENGINEERING

DRAWN BY:	DP
APPROVED BY:	LM
DATE DRAWN:	04/30/24

REVISION

NO	DESCRIPTION	BY	DATE
A	ISSUED FOR REVIEW	DP	05/06/24
0	ISSUED FOR CONSTRUCTION	DD	05/08/24

SHEET TITLE:
GENERATOR SPECIFICATIONS

SHEET NUMBER:
A4.9

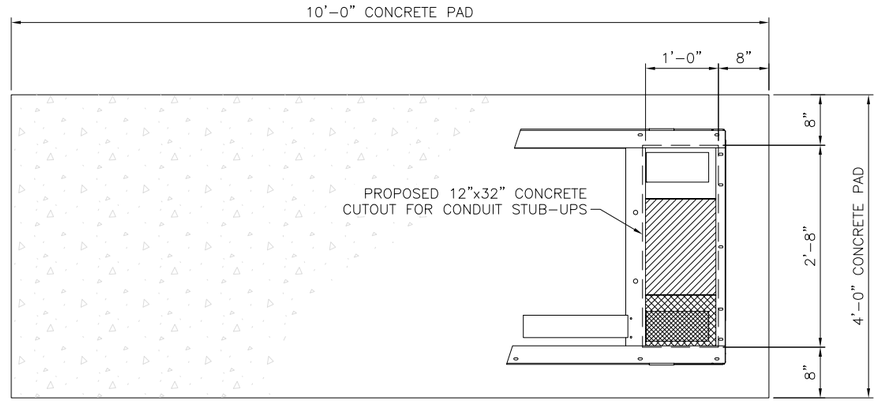

1 GENERAC DIESEL GENERATOR FOUNDATION LAYOUT

SCALE: N.T.S.

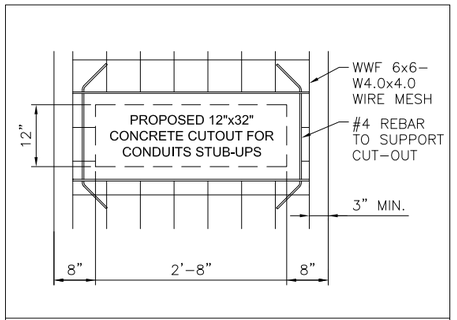

STUB-UP REINFORCEMENT

NOTE:
VERIFY EXACT CONDUIT STUB-UP LOCATIONS WITH GENSET PLANS

GENERATOR CLEARANCE NOTE:

- MINIMUM OF 10' OF CLEARANCE FROM COMBUSTIBLE WALL
- MINIMUM OF 5' OF CLEARANCE FROM NON-COMBUSTIBLE WALL
- MINIMUM OF 20' OF CLEARANCE FROM AN OUTDOOR ELECTRICAL TRANSFORMER OR NORMAL POWER DISTRIBUTION EQUIPMENT

NOTE:

SEE GENERATOR MANUFACTURER'S DRAWING FOR PHYSICAL LOCATION OF FUEL LINES, CONTROL AND POWER INTERCONNECTIONS AND OTHER INTERFACES THAT ARE TO BE CAST INTO THE CONCRETE. THE PREFERRED METHOD IS TO BRING THE CONDUIT THROUGH THE CONCRETE PAD TO THE UNDERSIDE OF THE GENERATOR (MINIMIZES RODENT DAMAGE). FINISH CONNECTIONS WITH FLEXIBLE CONDUIT PER GENERATOR MANUFACTURER'S SPECIFICATIONS. RIGID CONDUITS SHALL BE SECURED TO THE EXISTING SLAB, THEN BURIED BETWEEN SLAB AND PLATFORM.

NOTE:

SLAB NOT SUITABLE AT SITES WITH ORGANIC SOIL, UNCOMPACTED FILL, EXPANSIVE SOIL, OR SOILS SUSCEPTIBLE TO FROST HEAVE.

REMOVE ALL ORGANIC MATERIAL, SOFT AREA, AND POOR SOILS BENEATH CONCRETE PAD TO A DEPTH OF AT LEAST 4'-0" BELOW CONCRETE PAD.

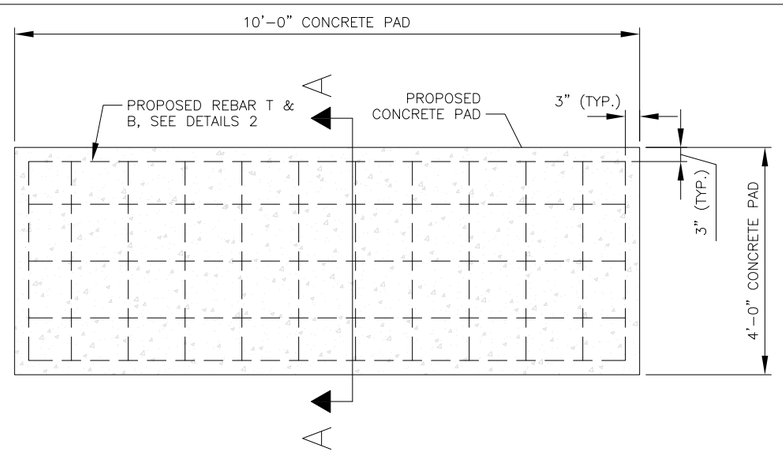

PLAN VIEW

NOTE:

1. ALL CONCRETE CONSTRUCTION SHALL BE IN COMPLIANCE WITH THE AMERICAN CONCRETE INSTITUTE – ACI 318 BUILDING CODE REQUIREMENTS FOR STRUCTURAL CONCRETE, AND ACI 301 INDUSTRY SPECIFICATION FOR STRUCTURAL CONCRETE.
2. ALL CONCRETE WORK SHALL BE PERFORMED IN ACCORDANCE WITH ACI301, ACI318, ACI336, ASTM A184, ASTM A185, AND THE DESIGN AND CONSTRUCTION SPECIFICATION FOR COST-IN-PLACE CONCRETE.
3. MINIMUM ALLOWABLE CONCRETE COMPRESSIVE STRENGTH SHALL BE 4000 PSI AT 28 DAYS WHEN TESTED IN ACCORDANCE WITH THE AMERICAN SOCIETY FOR TESTING AND MATERIALS METHODS STANDARDS ASTM C172, ASTM C31, AND ASTM C39 UNLESS NOTED OTHERWISE.
4. REINFORCING STEEL SHALL CONFORM TO ASTM A615, GRADE 60 KSI DEFORMED BAR UNLESS NOTED OTHERWISE. WELDING WIRE FABRIC SHALL CONFORM TO ASTM A185 WELDED STEEL WIRE FABRIC. SPLICES SHALL BE CLASS "B" AND ALL HOOKS SHALL BE STANDARD.
5. REINFORCING STEEL SHALL BE ACCURATELY PLACED AND ADEQUATELY SECURED IN POSITION. LOCATION OF REINFORCEMENT SHALL BE AS INDICATED ON THE DRAWINGS. CONCRETE COVER SHALL BE AS SHOWN.
6. TOP OF FOUNDATION TO HAVE A "BRUSH FINISH".
7. EXPOSED FINISHED SURFACE IS NOT TO HOLD WATER.
8. ALL SURFACES ARE TO BE CLEANED OF ANY RESIDUAL CONCRETE FROM SPLASHING OR SPILLS.
9. CONCRETE PAD FOR GENERATOR SHALL BE 12" THICK.
10. GENERATOR PAD CONCRETE SHALL BE POURED NEAT AGAINST TOTALLY CLEANED EXCAVATION & FORMED SURFACES WITH 6MIL POLYVINYL VAPOR BARRIER BASE.

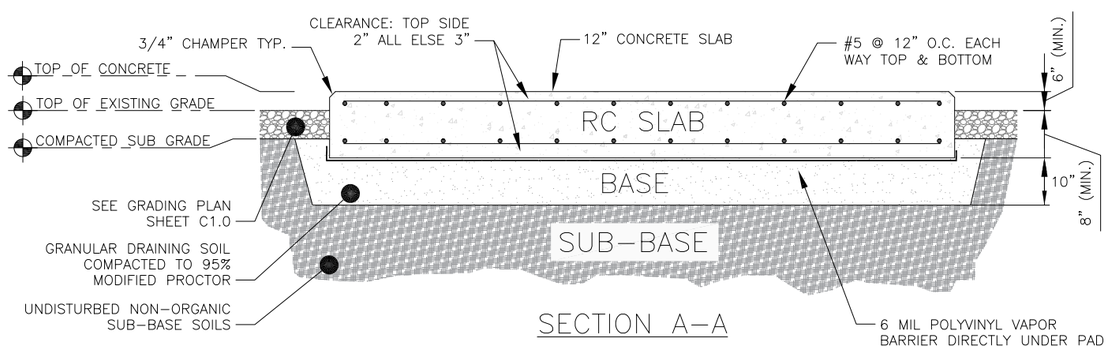

SECTION A–A

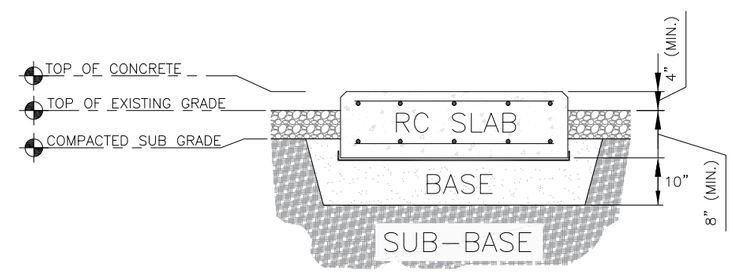

SIDE VIEW

2 GENERAC DIESEL GENERATOR FOUNDATION DETAIL

SCALE: N.T.S.

PREPARED FOR:

verizon

CHICAGO SMSA LIMITED PARTNERSHIP
D/B/A VERIZON WIRELESS
1701 GOLF ROAD
TOWER 2, SUITE 400
ROLLING MEADOWS, IL 60008

SITE NAME:
WHITEWATER SOUTH
SITE NUMBER:
765538

SITE ADDRESS:
797 INDIAN MOUND PARKWAY
WHITEWATER, WI 53190
WALWORTH COUNTY

STAMP:

WISCONSIN
LUIS MENDOZA
E-49916
LADERA RANCH
CALIFORNIA
PROFESSIONAL ENGINEER

05/08/24

MOUNTAIN, LTD.
ENGINEERING

DRAWN BY:	DP
APPROVED BY:	LM
DATE DRAWN:	04/30/24

REVISION

NO	DESCRIPTION	BY	DATE
A	ISSUED FOR REVIEW	DP	05/06/24
0	ISSUED FOR CONSTRUCTION	DD	05/08/24

SHEET TITLE:
GENERATOR PAD FOUNDATION DETAILS

SHEET NUMBER:
A4.10

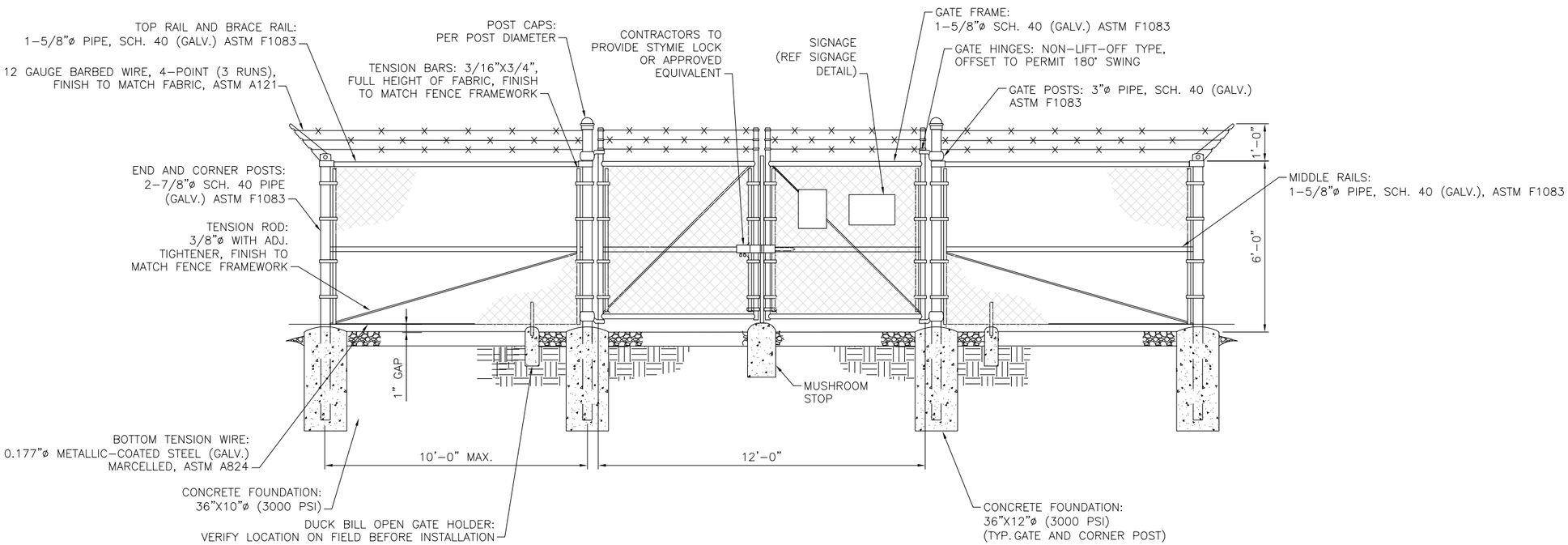

1 TYP. FENCE ELEVATION

SCALE: N.T.S.

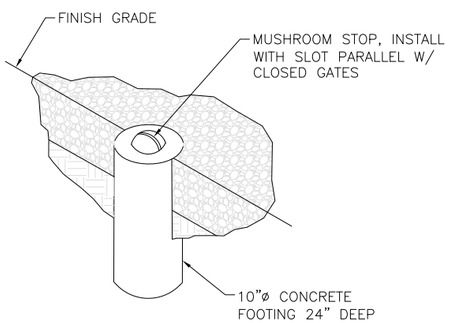

FENCE NOTES:

1. USE 3,000-PSI CONCRETE, FULLY CONSOLIDATED AROUND THE POST.
2. WHERE THE POST IS SET IN ROCK OR CONCRETE, CORE A HOLE 12" DEEP AND 1" LARGER IN DIAMETER THAN THE POST. SET THE POST AND GROUT IN PLACE USING NON-SHRINK GROUT.
3. ALL POSTS MUST BE PLUMB AND ALIGNED WITH ONE ANOTHER IN BOTH HORIZONTAL AND VERTICAL PLANES.
4. CORNERS AND GATES POSTS FOR CHAIN LINK FENCE SHALL EXTEND ABOVE THE TOP STRAND OF BARBED WIRE TO PROVIDE TENSIONING FOR THE BARBED WIRE.
5. PROVIDE MIDRAILS AND BRACING AT ALL CORNER POSTS WHERE THE FENCE CHANGES DIRECTION BY MORE THAN 30 DEGREES.
6. THE GRADE OF THE SITE AND INSTALLATION OF THE FENCE SHALL PROVIDE FOR NO MORE THAN A 1" GAP BETWEEN THE BOTTOM OF THE FENCE MATERIAL AND FINISH GRADE.
7. CONTRACTOR SHALL PROVIDE HOLD OPEN DEVICES FOR ALL GATES AT THE SPECIFIED OPEN POSITIONS, DRIVEN PIPE TYPE RECEIVERS ARE NOT AUTHORIZED.
8. CONTRACTOR SHALL ALSO PROVIDE A MUSHROOM TYPE RECEIVER AT THE CLOSE POSITION.

2 MUSHROOM STOP

SCALE: N.T.S.

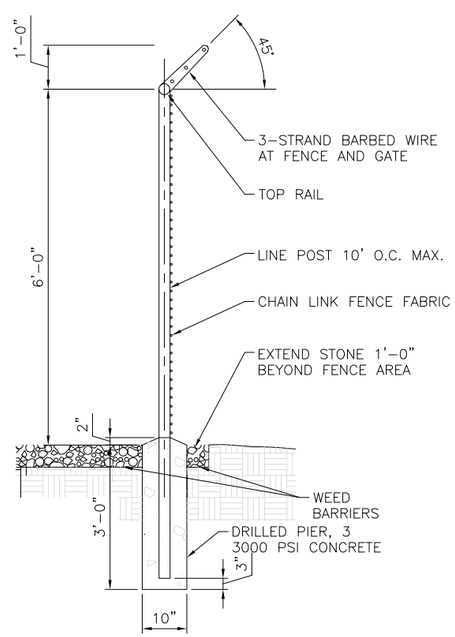

3 TYP. FENCE SECTION

SCALE: N.T.S.

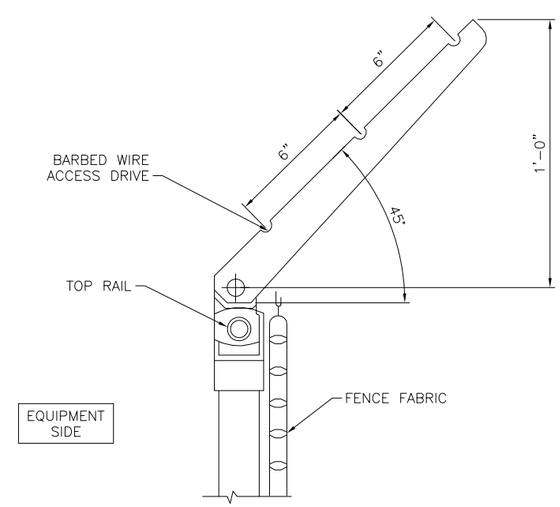

4 TYP. BARBED WIRE DETAIL

SCALE: N.T.S.

PREPARED FOR:

verizon

CHICAGO SMSA LIMITED PARTNERSHIP
D/B/A VERIZON WIRELESS
1701 GOLF ROAD
TOWER 2, SUITE 400
ROLLING MEADOWS, IL 60008

SITE NAME:
WHITEWATER SOUTH

SITE NUMBER:
765538

SITE ADDRESS:
797 INDIAN MOUND PARKWAY
WHITEWATER, WI 53190
WALWORTH COUNTY

STAMP:

WISCONSIN
LUIS MENDOZA
E-49916
LADERA RANCH
CALIFORNIA
PROFESSIONAL ENGINEER

05/08/24

MOUNTAIN, LTD.
ENGINEERING

DRAWN BY:	DP
APPROVED BY:	LM
DATE DRAWN:	04/30/24

REVISION

NO	DESCRIPTION	BY	DATE
A	ISSUED FOR REVIEW	DP	05/06/24
0	ISSUED FOR CONSTRUCTION	DD	05/08/24

SHEET TITLE:

FENCE DETAILS

SHEET NUMBER:

A4.11

NOTICE

GUIDELINES FOR WORKING IN
RADIO FREQUENCY ENVIRONMENTS

- All personnel should have electromagnetic energy (EME) awareness training.
- All personnel entering this must be authorized.
- Obey all posted signs.
- Assume all antennas are active.
- Before working on antennas, notify owners and disable appropriate transmitters.
- Maintain minimum 3 feet clearance from all antennas.
- Do not stop in front of antennas.
- Use personal RF monitors while working near antennas.
- Never operate transmitters without shielding during normal operation.
- Do not operate base state antennas in equipment room.

1 RF GUIDELINES SIGN
LOCATION ON:
– ANTENNA ENCLOSURE ENTRANCE
– EQUIPMENT ENCLOSURE GATE

INFORMATION

This is a Verizon Wireless
Antenna Site

Site ID: _____

For information, call:

800-264-6620

verizon

2 NOC INFORMATION SIGN
LOCATION ON:
– EQUIPMENT ENCLOSURE GATE

NOTE:
PROVIDE ADHESIVE VINYL SIGNS IF LOCATION ALLOWS FOR IT
METAL SIGN SPECIFICATIONS:
UV RESISTANT FOR OUTDOOR USE
ROUNDED CORNERS WITH PRE–DRILLED HOLES
NO OFFICIAL EME REPORT HAS BEEN PROVIDE.
SIGNAGE SHOWN IS APPROXIMATE. WILL VERIFY WHEN REPORT IS GIVEN.

SIGNAGE NOTES:
1. SIGNS SHALL BE FABRICATED FROM CORROSION RESISTANT PRESSED METAL, AND PAINTEDS WITH LONG LASTING UV RESISTANT COATINGS.
2. SIGNS (EXCEPT WHERE NOTED OTHERWISE) SHALL BE MOUNTED TO THE TOWER, GATE, AND FENCE USING A MINIMUM OG 9 GAUGE ALUMINUM WIRE, HOG RINGS (AS UTILIZED IN FENCE INSTALLATIONS) OR BRACKETS WHERE NECESSARY. BRACKETS SHALL BE OF SIMILAR METALS AS THE STRUCTURE TO AVOID GALVANIC CORROSION.

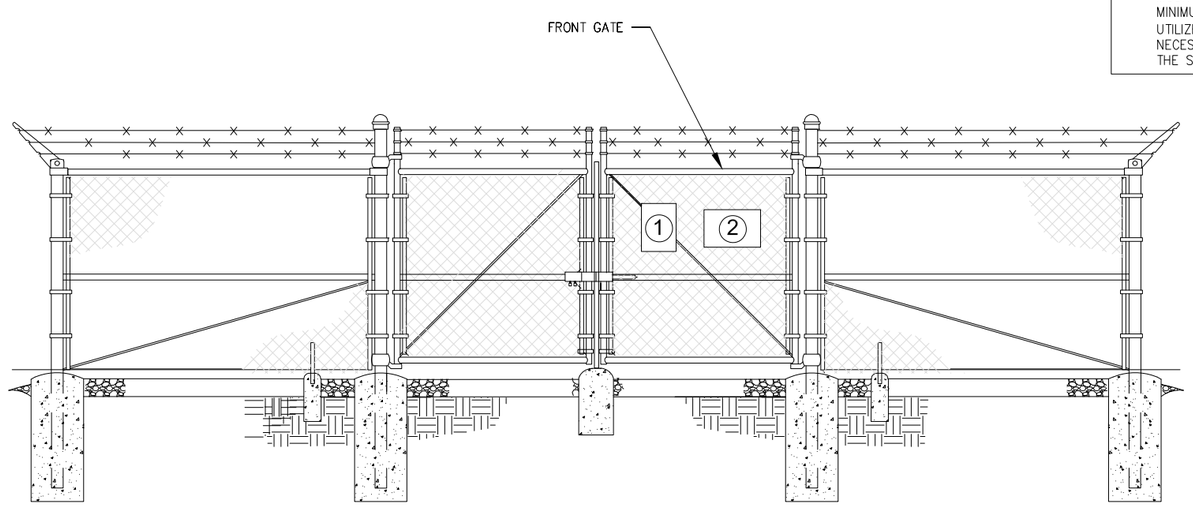

1 SITE SIGNAGE
SCALE: N.T.S.

PREPARED FOR:

verizon

CHICAGO SMSA LIMITED PARTNERSHIP
D/B/A VERIZON WIRELESS
1701 GOLF ROAD
TOWER 2, SUITE 400
ROLLING MEADOWS, IL 60008

SITE NAME:
WHITEWATER SOUTH
SITE NUMBER:
765538

SITE ADDRESS:
797 INDIAN MOUND PARKWAY
WHITEWATER, WI 53190
WALWORTH COUNTY

STAMP:

WISCONSIN
LUIS MENDOZA
E-49916
LADERA RANCH
CALIFORNIA
PROFESSIONAL ENGINEER

05/08/24

MOUNTAIN, LTD.
ENGINEERING

DRAWN BY:	DP
APPROVED BY:	LM
DATE DRAWN:	04/30/24

REVISION

NO	DESCRIPTION	BY	DATE
A	ISSUED FOR REVIEW	DP	05/06/24
0	ISSUED FOR CONSTRUCTION	DD	05/08/24

SHEET TITLE:

SIGNAGE DETAILS

SHEET NUMBER:
A4.12

GENERAL NOTES

1. SET POSTS AT 4–FEET MAXIMUM SPACING. IF FACTORY PREASSEMBLED FENCE WITH SUPPORT NETTING IS USED, SPACING OF POST MAY BE INCREASED TO 8 FEET MAXIMUM.

2. WHEN TWO SECTIONS OF FILTER FABRIC ADJOIN EACH OTHER, OVERLAP 6 INCHES AT THE POST, FOLD TOGETHER, AND ATTACH TO THE POSTS.

3. REMOVE SEDIMENT DEPOSITS WHEN SILT DEPTH REACHES ONE–THIRD OF THE HEIGHT OF THE FENCE.

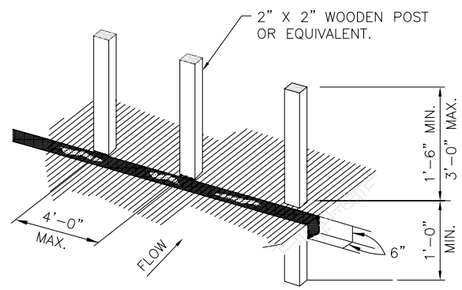

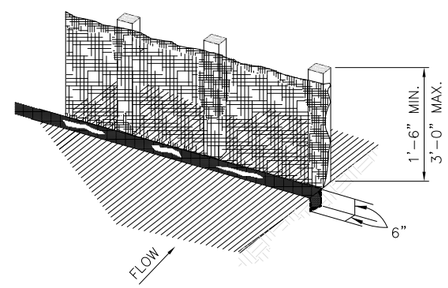

EXTENSION OF FABRIC INTO TRENCH.

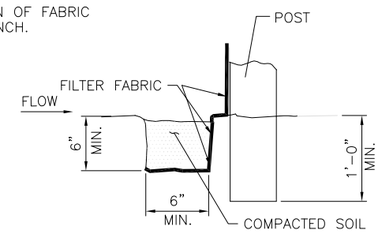

ALTERNATE V–TRENCH EXTENSION OF FABRIC INTO TRENCH.

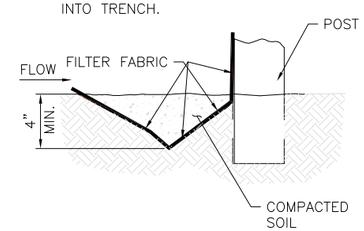

1 SILT FENCE DETAIL

SCALE: N.T.S.

PREPARED FOR:

verizon

CHICAGO SMSA LIMITED PARTNERSHIP
D/B/A VERIZON WIRELESS
1701 GOLF ROAD
TOWER 2, SUITE 400
ROLLING MEADOWS, IL 60008

SITE NAME:

WHITEWATER SOUTH

SITE NUMBER:

765538

SITE ADDRESS:
797 INDIAN MOUND PARKWAY
WHITEWATER, WI 53190
WALWORTH COUNTY

STAMP:

WISCONSIN
LUIS MENDOZA
E-49916
LADERA RANCH
CALIFORNIA
PROFESSIONAL ENGINEER

05/08/24

MOUNTAIN, LTD.
ENGINEERING

DRAWN BY:	DP
APPROVED BY:	LM
DATE DRAWN:	04/30/24

REVISION

NO	DESCRIPTION	BY	DATE
A	ISSUED FOR REVIEW	DP	05/06/24
0	ISSUED FOR CONSTRUCTION	DD	05/08/24

SHEET TITLE:

SITE DETAILS

SHEET NUMBER:

A4.13

KEY NOTES:

- (A) EQUIPMENT GROUND RING #2 AWG SOLID TINNED COPPER GROUND LEAD MIN. 4'–6" BURY OR 6" BELOW FROST WHICH EVER IS GREATER
- (B) MAINTAIN 2–FOOT CLEARANCE
- (C) MASTER GROUND BAR (MGB) MOUNTED VERTICALLY TO FIRST ICE BRIDGE POST ON INSULATORS
- (D) 5/8" DIAMETER x 10'–0" LONG COPPER CLAD GROUND ROD; SPACED AT 8' O.C.
- (E) BOND EQUIPMENT GROUND RING TO THE TOWER GROUND RING WITH (2) #2 SOLID BARE TINNED COPPER GROUND LEADS
- (F) EQUIPMENT CABINET GROUND; SEE SHEET E2.0 FOR DETAILS
- (G) INTEGRATED LOAD CENTER (ILC) GROUND; SEE SHEET E2.0 FOR DETAILS
- (H) FIBER ENCLOSURE GROUND; SEE SHEET E2.0 FOR DETAILS
- (I) GENERATOR GROUND; SEE SHEET E2.0 FOR DETAILS
- (J) ICE BRIDGE POST GROUND; SEE SHEET E2.0 FOR DETAILS
- (K) EQUIPMENT PAD REBAR GROUND; SEE SHEET E2.1 FOR DETAILS
- (L) GPS GROUND TO ICE BRIDGE POST; SEE SHEET E2.0 FOR DETAILS
- (M) GROUND FENCE POSTS WITHIN 6–FEET TO EQUIPMENT
- (N) INSPECTION WELL (TYP.); SEE SHEET E2.2 FOR DETAILS
- (O) EXISTING TOWER GROUND BAR

NOTES:

1. THE GROUNDING SHALL BE TESTED PRIOR TO FINAL BACKFILLING. DOCUMENTATION OF 5 OHN OR LESS RESISTANCE TO BE PROVIDED TO PROJECT MANAGER.
2. ALL NON–INSULATED GROUND LEADS EXTENDING ABOVE GROUND LEVEL SHALL BE ENCASED IN 3/4" PVC & SEALED WITH SILICONE. PVC SHALL BE MIN. 16" INTO EARTH & EXTEND MIN. 6" ABOVE GROUND.
3. INSTALL 18"x18" COPPER PLATES IN LIEU OF GROUND RODS WHEN INSTALLING OVER TOWER FOUNDATION OR WHERE DRIVING GROUND RODS IS NOT FEASIBLE.

GROUNDING LEGEND:

- ▲ EXOTHERMIC OR UL RATED IRREVERSIBLE CONNECTION
- ■ MECHANICAL CONNECTION
- —·—·— GROUND LEAD
- ⊗ INSPECTION WELL
- ⊗ 5/8" DIA. x 10'–0" LONG, STEEL CLAD W/ A PURE COPPER JACKET (10' MAX SEPARATION); TOP OF EACH GROUND ROD SHALL EXTEND NO MORE THAN 6" ABOVE BOTTOM OF TRENCH
- ⊠ 18"x18"x0.32" THK COPPER PLATE (10' MAX SEPARATION)

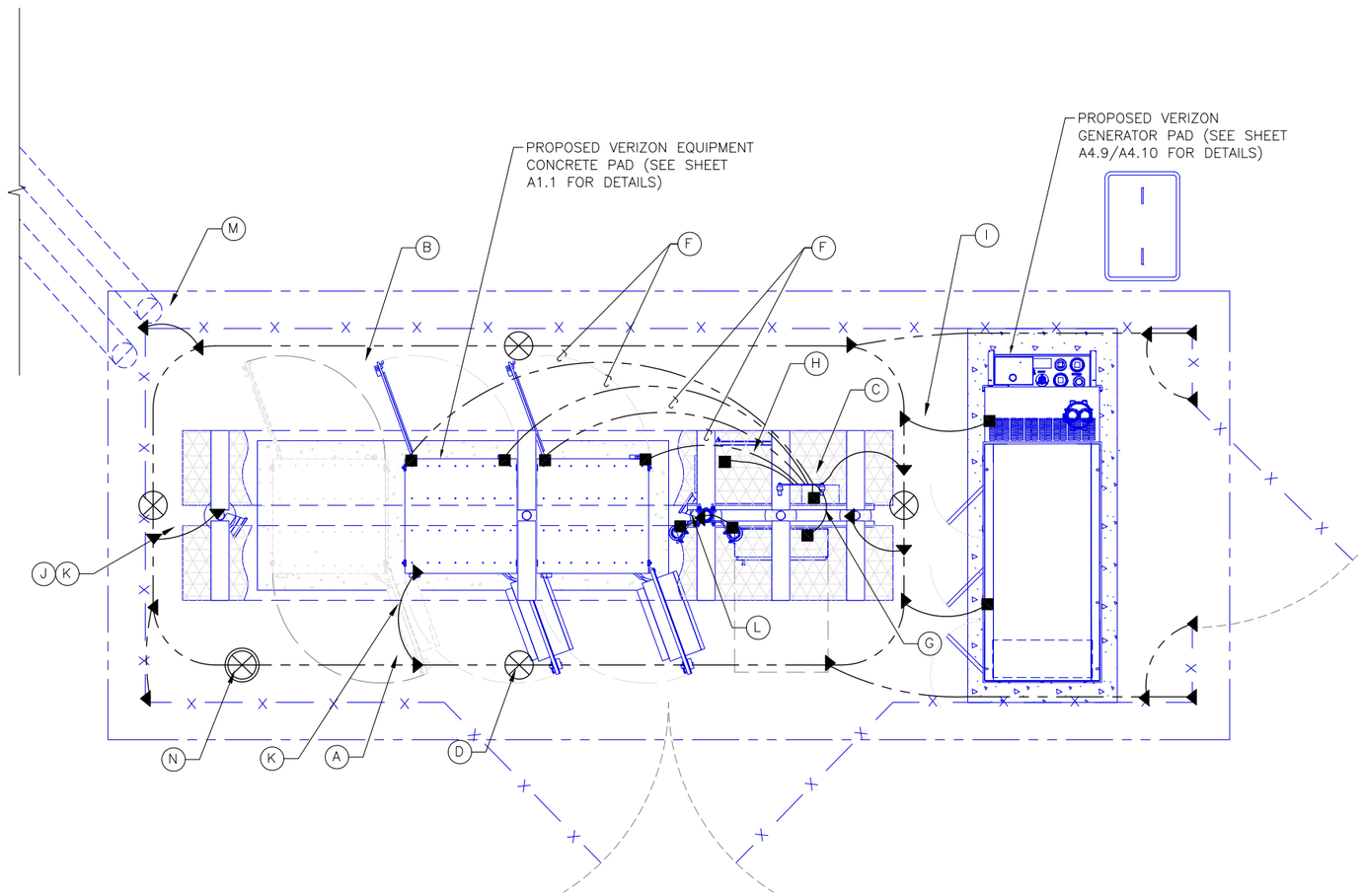

TRUE NORTH

1 COMPOUND GROUNDING PLAN

FULL SIZE PLOT SCALE: 1/2" = 1'–0"
HALF SIZE PLOT SCALE: 1/4" = 1'–0"

0 2' 4'

PREPARED FOR:

verizon

CHICAGO SMSA LIMITED PARTNERSHIP
D/B/A VERIZON WIRELESS
1701 GOLF ROAD
TOWER 2, SUITE 400
ROLLING MEADOWS, IL 60008

SITE NAME:
WHITEWATER SOUTH
SITE NUMBER:
765538

SITE ADDRESS:
797 INDIAN MOUND PARKWAY
WHITEWATER, WI 53190
WALWORTH COUNTY

STAMP:

WISCONSIN PROFESSIONAL ENGINEER
LUIS MENDOZA
E-49916
LADERA RANCH
CALIFORNIA

05/08/24

MOUNTAIN, LTD. ENGINEERING

DRAWN BY:	DP
APPROVED BY:	LM
DATE DRAWN:	04/30/24

REVISION

NO	DESCRIPTION	BY	DATE
A	ISSUED FOR REVIEW	DP	05/06/24
0	ISSUED FOR CONSTRUCTION	DD	05/08/24

SHEET TITLE:
COMPOUND GROUNDING PLAN

SHEET NUMBER:
E1.0

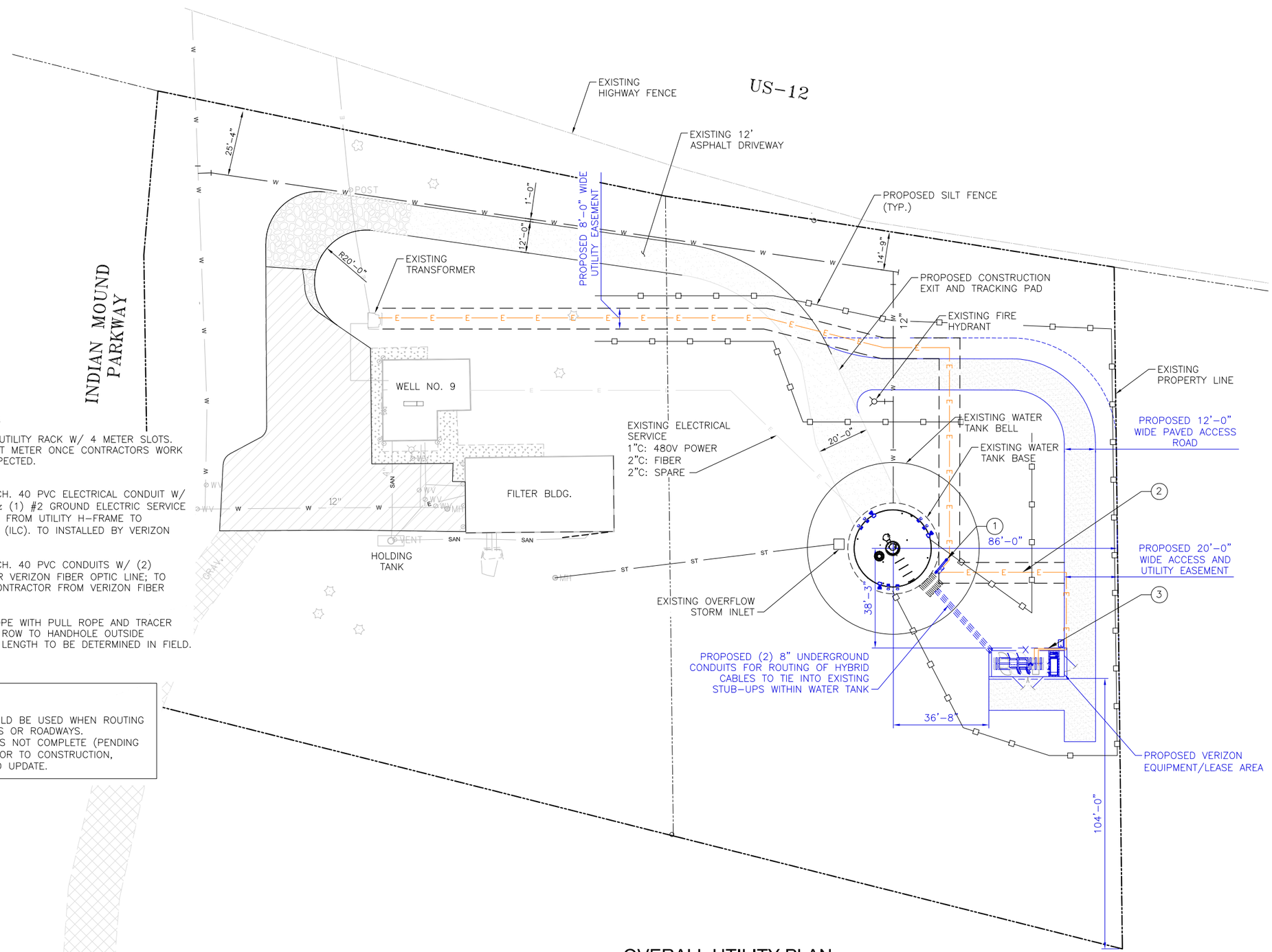

ELECTRICAL KEYED NOTES:

1. PROPOSED MULTI-METER UTILITY RACK W/ 4 METER SLOTS. UTILITY PROVIDER WILL SET METER ONCE CONTRACTORS WORK HAS BEEN PROPERLY INSPECTED.
2. PROPOSED (1) 3" DIA. SCH. 40 PVC ELECTRICAL CONDUIT W/ (3) 4/0 UNDERGROUND & (1) #2 GROUND ELECTRIC SERVICE 42" BELOW GRADE (MIN.); FROM UTILITY H-FRAME TO INTEGRATED LOAD CENTER (ILC). TO INSTALLED BY VERIZON CONTRACTOR.
3. PROPOSED (2) 4" DIA. SCH. 40 PVC CONDUITS W/ (2) 1-1/4" INNER DUCTS FOR VERIZON FIBER OPTIC LINE; TO INSTALLED BY VERIZON CONTRACTOR FROM VERIZON FIBER VAULT TO CHARLES CUBE.
4. PROPOSED (2) 2" DIA. HDPE WITH PULL ROPE AND TRACER WIRE FROM HANDHOLE IN ROW TO HANDHOLE OUTSIDE COMPOUND. APPROXIMATE LENGTH TO BE DETERMINED IN FIELD.

NOTE:

1. SCH80 CONDUIT SHOULD BE USED WHEN ROUTING ACROSS PARKING LOTS OR ROADWAYS.
2. FIBER COORDINATION IS NOT COMPLETE (PENDING FIBER CONTRACT). PRIOR TO CONSTRUCTION, CONTACT DESIGNER TO UPDATE.

1 OVERALL UTILITY PLAN

FULL SIZE PLOT SCALE: 1' = 20'
HALF SIZE PLOT SCALE: 1' = 40'

PREPARED FOR:

verizon

CHICAGO SMSA LIMITED PARTNERSHIP
D/B/A VERIZON WIRELESS
1701 GOLF ROAD
TOWER 2, SUITE 400
ROLLING MEADOWS, IL 60008

SITE NAME:
WHITEWATER SOUTH
SITE NUMBER:
765538

SITE ADDRESS:
797 INDIAN MOUND PARKWAY
WHITEWATER, WI 53190
WALWORTH COUNTY

STAMP:

WISCONSIN
LUIS MENDOZA
E-49916
LADERA RANCH
CALIFORNIA
PROFESSIONAL ENGINEER

05/08/24

MOUNTAIN, LTD.
ENGINEERING

DRAWN BY:	DP
APPROVED BY:	LM
DATE DRAWN:	04/30/24

REVISION

NO	DESCRIPTION	BY	DATE
A	ISSUED FOR REVIEW	DP	05/06/24
0	ISSUED FOR CONSTRUCTION	DD	05/08/24

SHEET TITLE:
OVERALL UTILITY PLAN

SHEET NUMBER:
E1.1

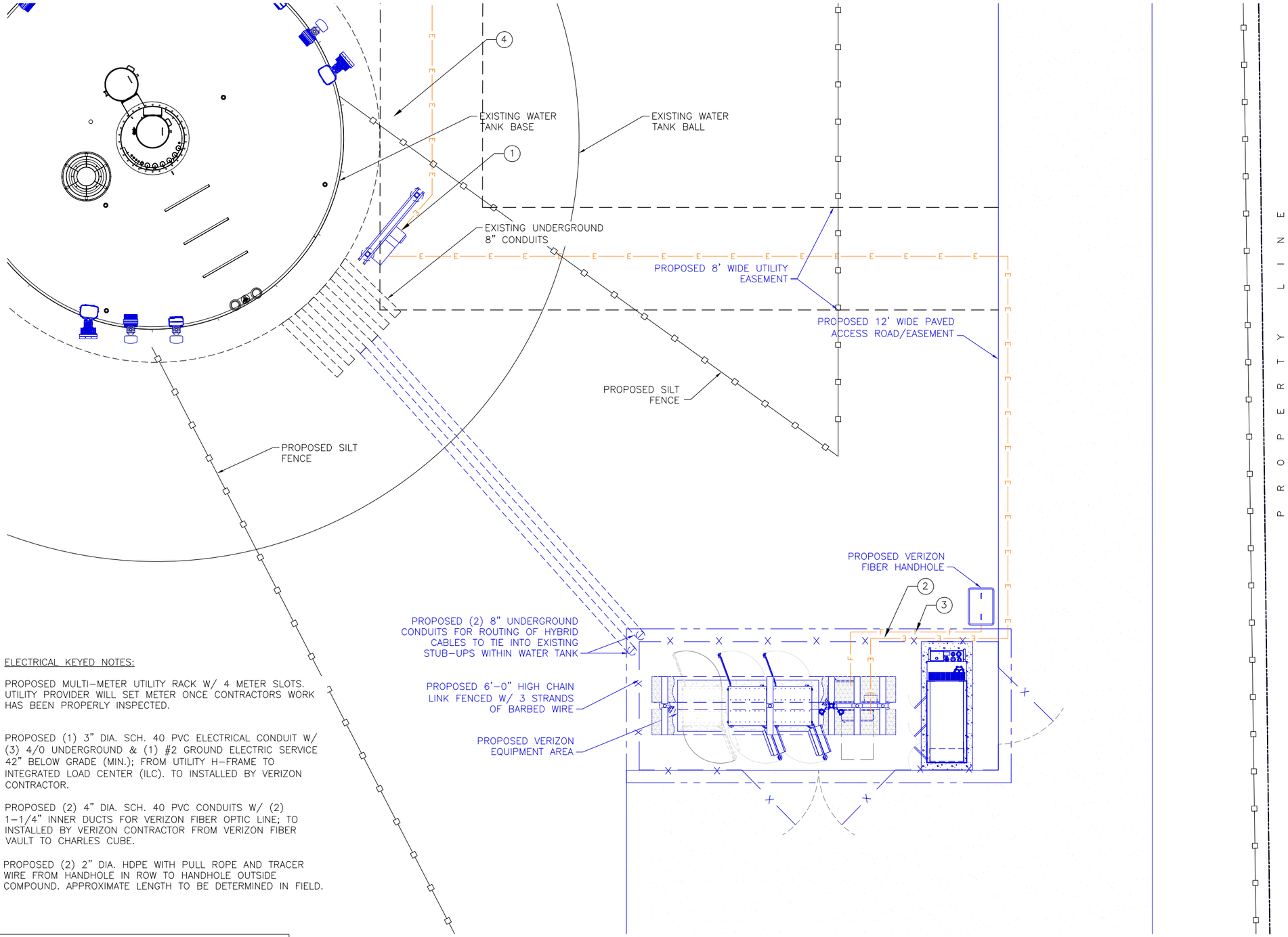

ELECTRICAL KEYED NOTES:

1. PROPOSED MULTI-METER UTILITY RACK W/ 4 METER SLOTS. UTILITY PROVIDER WILL SET METER ONCE CONTRACTORS WORK HAS BEEN PROPERLY INSPECTED.

2. PROPOSED (1) 3" DIA. SCH. 40 PVC ELECTRICAL CONDUIT W/ (3) 4/0 UNDERGROUND & (1) #2 GROUND ELECTRIC SERVICE 42" BELOW GRADE (MIN.); FROM UTILITY H-FRAME TO INTEGRATED LOAD CENTER (ILC). TO INSTALLED BY VERIZON CONTRACTOR.

3. PROPOSED (2) 4" DIA. SCH. 40 PVC CONDUITS W/ (2) 1-1/4" INNER DUCTS FOR VERIZON FIBER OPTIC LINE; TO INSTALLED BY VERIZON CONTRACTOR FROM VERIZON FIBER VAULT TO CHARLES CUBE.

4. PROPOSED (2) 2" DIA. HDPE WITH PULL ROPE AND TRACER WIRE FROM HANDHOLE IN ROW TO HANDHOLE OUTSIDE COMPOUND. APPROXIMATE LENGTH TO BE DETERMINED IN FIELD.

NOTE:

1. SCH80 CONDUIT SHOULD BE USED WHEN ROUTING ACROSS PARKING LOTS OR ROADWAYS.

TRUE NORTH

1 UTILITY PLAN

FULL SIZE PLOT SCALE: 1/4" = 1'-0"
HALF SIZE PLOT SCALE: 1/8" = 1'-0"

0 2' 4' 8'

PREPARED FOR:

verizon

CHICAGO SMSA LIMITED PARTNERSHIP
D/B/A VERIZON WIRELESS
1701 GOLF ROAD
TOWER 2, SUITE 400
ROLLING MEADOWS, IL 60008

SITE NAME:
WHITEWATER SOUTH
SITE NUMBER:
765538

SITE ADDRESS:
797 INDIAN MOUND PARKWAY
WHITEWATER, WI 53190
WALWORTH COUNTY

STAMP:

WISCONSIN
LUIS MENDOZA
E-49916
LADERA RANCH
CALIFORNIA
PROFESSIONAL ENGINEER

05/08/24

MOUNTAIN, LTD.
ENGINEERING

DRAWN BY:	DP
APPROVED BY:	LM
DATE DRAWN:	04/30/24

REVISION

NO	DESCRIPTION	BY	DATE
A	ISSUED FOR REVIEW	DP	05/06/24
0	ISSUED FOR CONSTRUCTION	DD	05/08/24

SHEET TITLE:
UTILITY PLAN

SHEET NUMBER:
E1.2

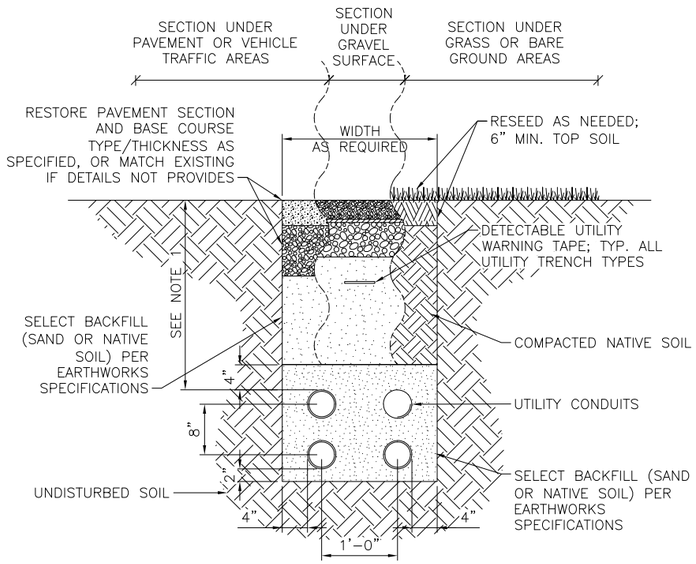

NOTES:
1. UTILITY CONDUITS TO BE BURIED A MINIMUM DEPTH OF 42" BELOW GROUND LEVEL OR 6" BELOW THE FROST LINE.

1 UTILITY TRENCH
SCALE: N.T.S.

MANUFACTURER: QUAZITE
MODEL: PG2436BA36 (SPLICE BOX)
PG2436BA24 (PULL BOX)
PG2436KK00 (COVER)
INSIDE DIMENSIONS:
24"x36"x36" (LxWxD) SPLICE BOX
24"x36"x24" (LxWxD) PULL BOX

POLYMER CONCRETE BOX WITH OPEN BOTTOM

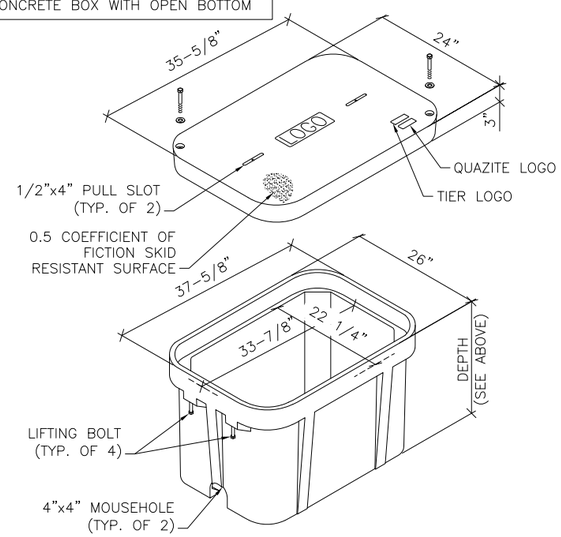

2 NOT USED
SCALE: N.T.S.

WARNING TAPE & TRACE WIRE NOTES:

1. WARNING TAPE TO BE INSTALLED ABOVE THE ELECTRICAL RUN FROM THE GENERATOR TO THE PLATFORM AND ABOVE THE FUEL LINE BETWEEN THE GENERATOR AND FUEL SOURCE.
2. WARNING TAPE SHALL BE RUN CONTINUOUSLY ALONG THE ENTIRE LENGTH AND INSTALLED 12 INCHES ABOVE THE TOP OF THE CONDUITS
3. TRACER WIRE SHALL RUN CONTINUOUSLY ALONG THE ENTIRE LENGTH OF THE BURIED GAS AND ELECTRIC CONDUITS.
4. TRACER WIRE SHALL BE SECURED TO THE CONDUIT AND MAINTAINED ABOVE THE CONDUIT CENTERLINE DURING TRENCH BACKFILLING.
5. TRACER WIRE TO EXTEND TO THE TOP OF PVC ABOVE CONCRETE ON BOTH ENDS – LOOP AND WRAP AROUND APPROPRIATE CONDUIT.
6. TRACER WIRE SHALL CONSIST OF 14GA. SOLID COPPER WIRE WITH A CORROSION PROTECTIVE COATING.
7. INSTALL TRACER WIRE WITH SPACER AND SECURE PER MNFG. RECOMMENDATIONS – AT A MIN. EVERY 10' AND AT ALL BENDS. – DO NOT WRAP BURIED CONDUIT WITH TRACER WIRE TO AVOID UNNECESSARY STRESS ON TRACER. – CONTRACTOR TO CHECK CONTINUITY OF TRACER WIRE BEFORE AND AFTER BURIAL AND DOCUMENT RESULTS. 12" ABOVE THE TOP OF THE CONDUITS.

KEYED NOTES:

1. (4) NEW 200A 1ø3W 120/240V METER IN METER BASE, BY ELECTRIC SERVICE PROVIDER.
2. (4) NEW SERVICE ENTRANCE RATED DISCONNECT, 200A, 1ø3W 120/240V. INSTALL (4) 200A BREAKERS, ONE PER METER SLOT.
3. NEW MAIN TELCO ENCLOSURE. INSTALL GROUND STRIP AND NEMA 5-20R GFCI.
4. 4" SCH 40 CONDUIT WITH (3) 1" CORRUGATED INNER DUCTS W/ PULL STRINGS FROM THE TELCO ENCLOSURE TO THE MEET ME POINT.
5. VERIZON TO INSTALL (1) 3" SCH 40 (ELBOWS SCH 80) CONDUIT FROM THE VERIZON H-FRAME TO THE UTILITY POLE.

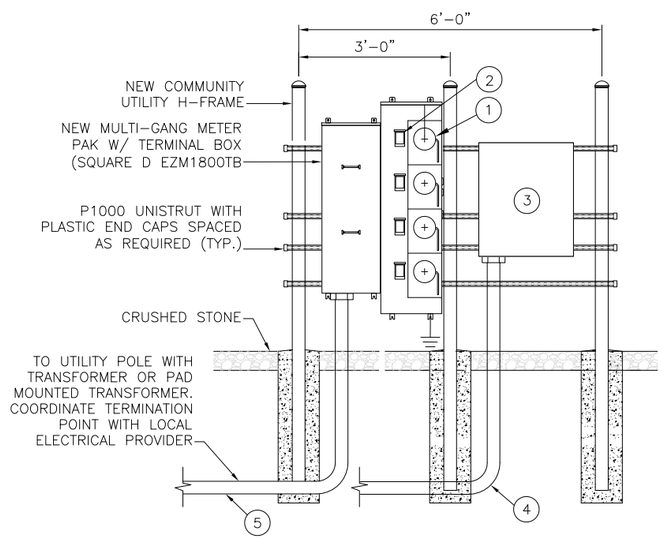

FRONT VIEW

3 MULTI-TENANT UTILITY H-FRAME DETAIL
SCALE: N.T.S.

NOTES:
CONFIGURATION OF SERVICE LATERAL SHOWN FOR REFERENCE. COORDINATE EXACT REQUIREMENTS WITH UTILITY PROVIDER.
1. VERIFY ALL EXISTING UNDERGROUND UTILITIES BEFORE TRENCHING.
2. ELECTRICAL CONTRACTOR SHALL CONTACT POWER CO. & TELE. CO. AND VERIFY EXACT ROUTING, SIZES AND CONDITIONS BEFORE TRENCHING.
3. INSTALL ALL CONDUITS & EQUIPMENT AS SPECIFIED BY POWER CO. & TELE. CO.
4. PROVIDE NYLON PULL STRINGS ON ALL EMPTY CONDUITS.
5. ONLY CONDUITS DIRECTLY SERVING VERIZON EQUIPMENT SHALL BE ROUTED THROUGH VERIZON LEASE AREA
6. ADD E911 ADDRESS TO THE METER BANK. THE LETTERING NEEDS TO BE A MINIMUM OF 2" TALL.
7. LABEL EACH METER PER UTILITY COMPANY REQUIREMENTS.

PREPARED FOR:

verizon

CHICAGO SMSA LIMITED PARTNERSHIP
D/B/A VERIZON WIRELESS
1701 GOLF ROAD
TOWER 2, SUITE 400
ROLLING MEADOWS, IL 60008

SITE NAME:
WHITEWATER SOUTH
SITE NUMBER:
765538

SITE ADDRESS:
797 INDIAN MOUND PARKWAY
WHITEWATER, WI 53190
WALWORTH COUNTY

STAMP:

WISCONSIN
LUIS MENDOZA
E-49916
LADERA RANCH
CALIFORNIA
PROFESSIONAL ENGINEER
05/08/24

MOUNTAIN, LTD.
ENGINEERING

DRAWN BY:	DP
APPROVED BY:	LM
DATE DRAWN:	04/30/24

REVISION

NO	DESCRIPTION	BY	DATE
A	ISSUED FOR REVIEW	DP	05/06/24
0	ISSUED FOR CONSTRUCTION	DD	05/08/24

SHEET TITLE:
UTILITY DETAILS

SHEET NUMBER:
E1.3

KEY NOTES:

- (A) 1/4"x4"x12" COLLECTOR GROUND BAR (CGB) FOR CONNECTIONS OF MULTIPLE GROUND KITS AT ONE LEVEL
- (B) CGB GROUND #2 AWG GREEN–INSULATED STRANDED COPPER LEAD WITH 2 HOLE LONG BARREL AND UL LISTED BONDING CLAMP TO LOWER STEEL AND/OR MOUNT STEEL
- (C) ANCILLARY EQUIPMENT GROUND KIT #2 AWG STRANDED INSULATED LEAD TO GROUND BAR WITH 2 HOLE LONG BARREL LUG (TYP.)
- (D) CABLE GROUND #2 AWG STRANDED INSULATED TO GROUND BAR WITH 2 HOLE LONG BARREL LUG (TYP.)
- (E) 1/4"x4"x20" MASTER GROUND BAR (MGB) MOUNTED VERTICALLY TO FIRST ICE BRIDGE POST ON INSULATORS
- (F) EQUIPMENT CABINET GROUND #2 AWG SOLID TINNED COPPER LEAD ENCASE IN LIQUID–TIGHT FLEXIBLE NON–METALLIC CONDUIT TO 24" BELOW GRADE TO EQUIPMENT PAD GROUND RING (TYP. OF 2 PER CABINET)
- (G) INTEGRATED LOAD CENTER (ILC) GROUND #2 AWG SOLID TINNED COPPER LEASE ENCASED IN LIQUID–TIGHT FLEXIBLE NON–METALLIC CONDUIT TO 24" BELOW GRADE TO EQUIPMENT PAD GROUND RING
- (H) FIBER ENCLOSURE GROUND #2 AWG SOLD TINNED COPPER LEAD ENCASE IN LIQUID–TIGHT FLEXIBLE NON–METALLIC CONDUIT TO 24" BELOW GRADE TO EQUIPMENT PAD GROUND RING
- (I) GENERATOR GROUND #2 AWG SOLID TINNED COPPER LEAD ENCASE IN LIQUID–TIGHT FLEXIBLE NON–METALLIC CONDUIT TO 24" BELOW GRADE TO EQUIPMENT PAD GROUND RING (TYP. OF 2)
- (J) CANOPY POST GROUND #2 AWG SOLID TINNED COPPER LEAD ENCASED IN LIQUID–TIGHT FLEXIBLE NON–METALLIC CONDUIT TO 24" BELOW GRADE (TYP. OF 4)
- (K) CANOPY TO POST GROUND #2 AWG GREEN–INSULATED STRANDED COPPER LEAD WITH 2 HOLE LONG BARREL ON EACH END (TYP.);
- (L) EQUIPMENT PAD REBAR GROUND #2 AWG SOLID TINNED COPPER LEASE ENCASE IN LIQUID–TIGHT FLEXIBLE NON–METALLIC CONDUIT TO 24" BELOW GRADE
- (M) CONDUIT GROUND #2 AWG SOLID TINNED COPPER LEAD
- (N) GPS GROUND TO ICE BRIDGE POST #2 AWG GREEN–INSULATED STRANDED COPPER LEAD
- (O) ICE BRIDGE POST GROUND #2 AWG SOLID TINNED COPPER LEAD ENCASED IN LIQUID–TIGHT FLEXIBLE NON–METALLIC CONDUIT TO 24" BELOW GRADE (TYP.)
- (P) ICE BRIDGE SECTION GROUND #2 AWG GREEN–INSULATED STRANDED COPPER LEAD WITH 2 HOLE LONG BARREL ON EACH END (TYP.)
- (Q) ICE BRIDGE SECTION TO POST GROUND #2 AWG SOLID TINNED COPPER LEAD (TYP.); ORIENT LEAD WITH HIGH SIDE TOWARDS TOWER
- (R) 14"x4"x20" TOWER GROUND BAR (TGB) INSTALLED ON TOWER; FOR LATTICE TOWERS, MOUNT TGB DIAGONALLY AT 12" ABOVE ICE BRIDGE FOR EASIER HOOK–UP OF GROUNDING KIT LEADS
- (S) TGB GROUND #2 AWG SOLID TINNED COPPER LEAD ENCASED IN LIQUID–TIGHT FLEXIBLE NON–METALLIC CONDUIT TO 24" BELOW GRADE FROM TGB TO TOWER GROUND RING (TYP. OF 2)
- (T) TGB GROUND #2 AWG GREEN–INSULATED STRANDED COPPER LEAD WITH 2 HOLE LONG BARREL AND UL LISTED BONDING CLAMP TO FLAT METAL
- (U) SECURE GROUND LEADS TO TOWER WITH BAND STRAPS OR SNAP–IN HANGERS AT GENERAL CONTRACTOR'S DISCRETION. USE MULTIPLE LEVELS OF ATTACHMENT IF GROUND BAR IS ATTACHED HIGH ABOVE GRADE.

GROUNDING LEGEND:

- ▲ EXOTHERMIC OR UL RATED IRREVERSIBLE CONNECTION
- ■ MECHANICAL CONNECTION
- —·—·— GROUND LEAD

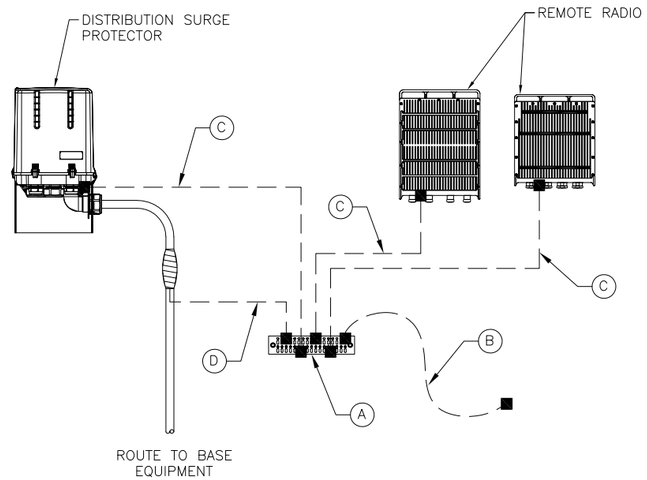

NOTES:
1. ALL CABLING AND/OR GROUNDING RUNS SHALL BE INSTALLED IN A NEAT AND ORDERLY FASHION.
2. CONTRACTOR SHALL INSTALL PER LATEST EDITION OF THE N.E.C.
3. SCHEMATIC DETAIL ONLY. REFER TO ANTENNA AND EQUIPMENT CONFIGURATION FOR EQUIPMENT QUANTITY AND LOCATION.
4. ALL GROUND LEADS TO BE ROUTED IN A DOWNWARD FASHION.

1 ANTENNA LEVEL GROUNDING
SCALE: N.T.S.

NOTES:

1. ALL BELOW–GRADE CONNECTIONS AREA TO BE EXOTHERMICALLY WELDED A MINIMUM OF 48" BELOW GRADE.
2. ALL LEADS EXTENDING ABOVE GRADE TO BE ENCASE IN 3/4" CONDUIT AND EXTEND A MINIMUM OF 6" ABOVE FINISHED GRADE AND 24" BELOW FINISHED GRADE.
3. APPLY COLD GALVANIZATION TO ALL ABOVE–GROUND EXOTHERMICALLY WELDED CONNECTIONS.
4. APPLY ANTI OXIDANT COMPOUND TO ALL MECHANICAL CONNECTIONS.
5. UPPER AND LOWER TOWER GROUND BARDS TO BE BONDED DIRECTLY TO TOWER STEEL WITH #2 CONDUCTORS.
6. AIR TERMINAL TO EXTEND 2" ABOVE HIGHEST ANTENNA MIN. OR MAST PIPE MECHANICALLY FASTEN AIR TERMINAL TO MAST PIPE MAST PIPE TO BE MECHANICALLY CONNECTED TO TOWER STEEL.

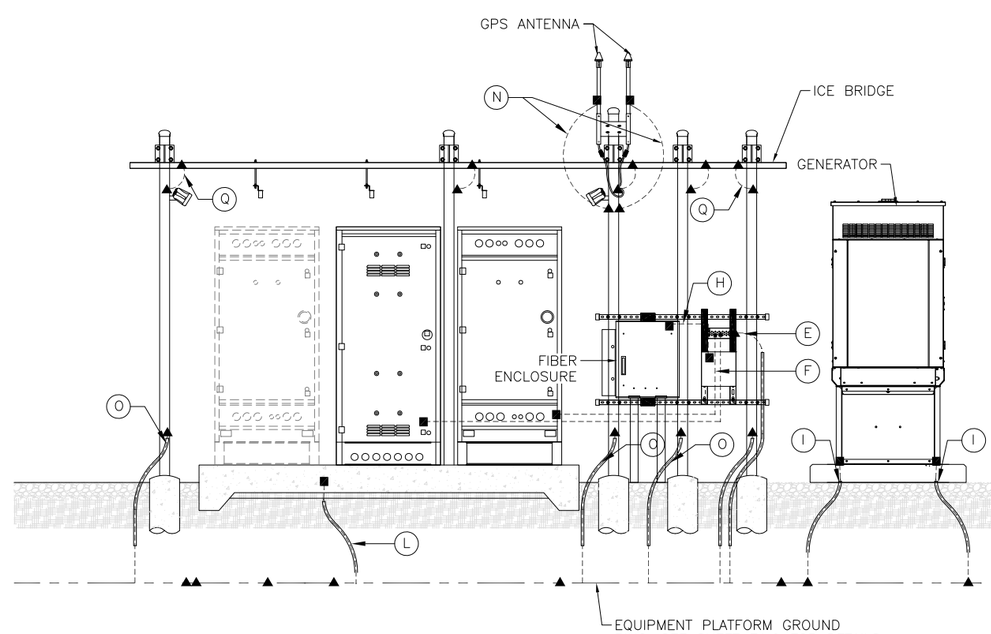

2 SITE GROUNDING
SCALE: N.T.S.

PREPARED FOR:

verizon

CHICAGO SMSA LIMITED PARTNERSHIP
D/B/A VERIZON WIRELESS
1701 GOLF ROAD
TOWER 2, SUITE 400
ROLLING MEADOWS, IL 60008

SITE NAME:
WHITEWATER SOUTH
SITE NUMBER:
765538

SITE ADDRESS:
797 INDIAN MOUND PARKWAY
WHITEWATER, WI 53190
WALWORTH COUNTY

STAMP:

WISCONSIN
LUIS MENDOZA
E-49916
LADERA RANCH
CALIFORNIA
PROFESSIONAL ENGINEER
05/08/24

MOUNTAIN, LTD.
ENGINEERING

DRAWN BY:	DP
APPROVED BY:	LM
DATE DRAWN:	04/30/24

REVISION

NO	DESCRIPTION	BY	DATE
A	ISSUED FOR REVIEW	DP	05/06/24
0	ISSUED FOR CONSTRUCTION	DD	05/08/24

SHEET TITLE:
GROUNDING DETAILS

SHEET NUMBER:
E2.0

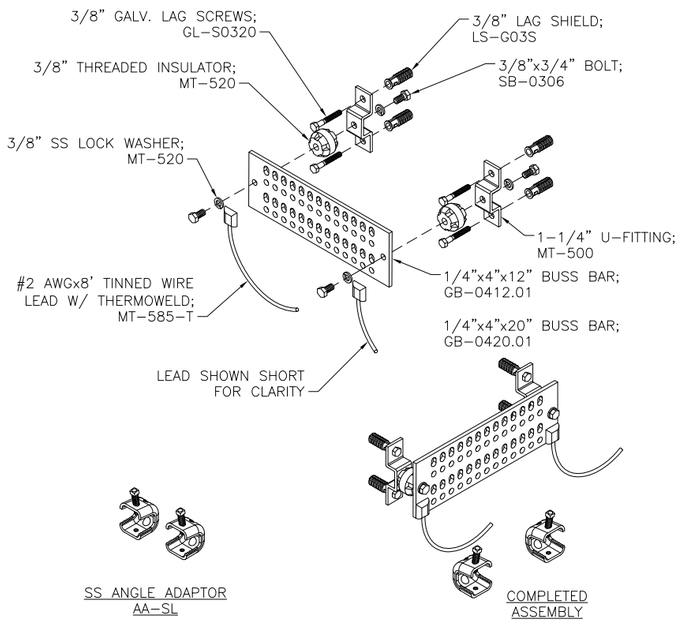

1 GROUND AND BUSS BAR

SCALE: N.T.S.

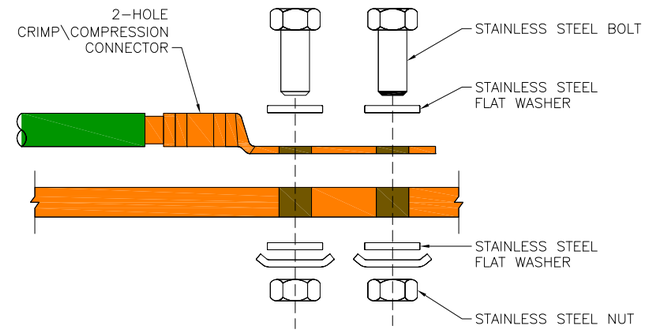

NOTES:

1. ALL OUTDOOR HARDWARE (BOLTS, SCREWS, NUTS, WASHERS) SHALL BE 18-8 STAINLESS STEEL TYPE GRADE. INDOORS, GRADE 5 STEEL HARDWARE MAY BE USED.
2. CHOOSE BOLT LENGTH TO ALLOW THE EXPOSURE OF AT LEAST TWO THREADS.
3. BACK TO BACK LUG CONNECTIONS ARE AN ACCEPTABLE PRACTICE WHEN BONDED TO A GROUND BAR OR STEEL OBJECTS.
4. AT CONNECTIONS MADE TO STEEL OR ANY OTHER DISSIMILAR METALS, A DRAGON TOOTH WASHER MEETING VZW PRACTICES SHALL BE USED BETWEEN THE CONNECTOR AND STEEL.
5. IF NOT USING DRAGON TOOTH WASHERS, THOROUGHLY REMOVE A SECTION OF PAINT OR COATING APPROXIMATELY THE SAME SIZE AS CONNECTOR. REMOVE THE PAINT FROM SURFACE USING A DREMEL TYPE TOOL.
6. USE AN APPROVED ANTI-OXIDATION COMPOUND ON ALL GROUNDING CONNECTIONS. A COPPER COSMOLINE GREASE BASED COMPOUND (NO OX-ID) SHALL BE USED ON ALL COPPER TO COPPER CONNECTIONS. A ZINC BASED (GREY COLORED) COMPOUND SHALL BE USED ON ALL COPPER TO STEEL CONNECTIONS.
7. WHEN BONDING TO A METALLIC OBJECT WHERE ACCESS IS LIMITED TO ONLY ONE SURFACE, DRILLING & TAPPING OR SELF DRILLING SCREWS ARE THE PREFERRED AND ACCEPTABLE MEANS OF CONNECTIONS. SHEET METAL SCREWS SHALL NOT BE USED

2 GROUNDING LUG

SCALE: N.T.S.

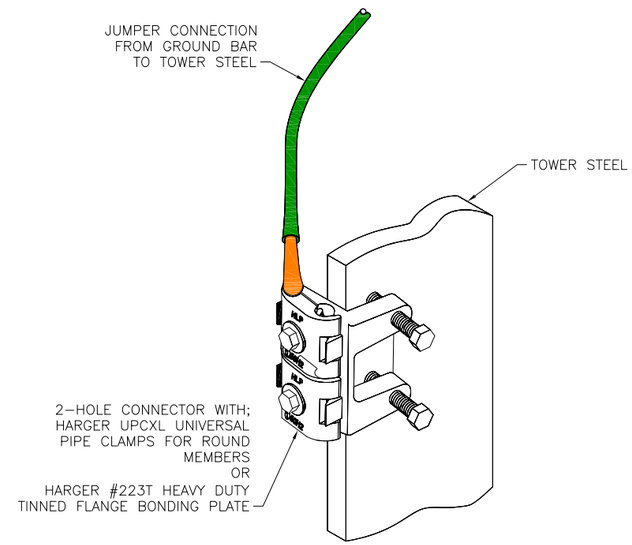

3 GROUND BAR CONNECTION TO TOWER STEEL

SCALE: N.T.S.

MANUFACTURER: SITE PRO1
MODEL: VARIES (SEE BELOW)

KIT INCLUDES UNIVERSAL SLOTTED 3/8" TWO-HOLE LUG, HARDWARE, BUTYL, AND ELECTRICAL TYPE.

COMPLIES WITH MIL-STD-188-124A AND WITHSTANDS LIGHTNING STRIKES IN EXCESS OF 200kA.

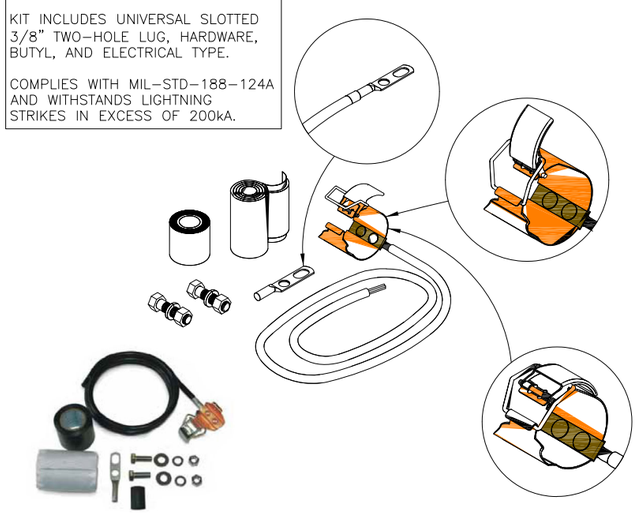

PART#	CABLE SIZE & TYPE	LENGTH	LUG	WEIGHT
GK-C12	1/2" CORRUGATED	5'	UNATTACHED	1.50 LB.
GK-C78	7/8" CORRUGATED	5'	UNATTACHED	1.65 LB.
GK-C114	1-1/4" CORRUGATED	5'	UNATTACHED	1.70 LB.
GK-C158	1-5/8" CORRUGATED	5'	UNATTACHED	1.80 LB.
GK-C214	2-1/4" CORRUGATED	5'	UNATTACHED	1.50 LB.

4 CLIP ON GROUND KIT

SCALE: N.T.S.

MANUFACTURER: HARGER
MODEL: VARIES (SEE BELOW)

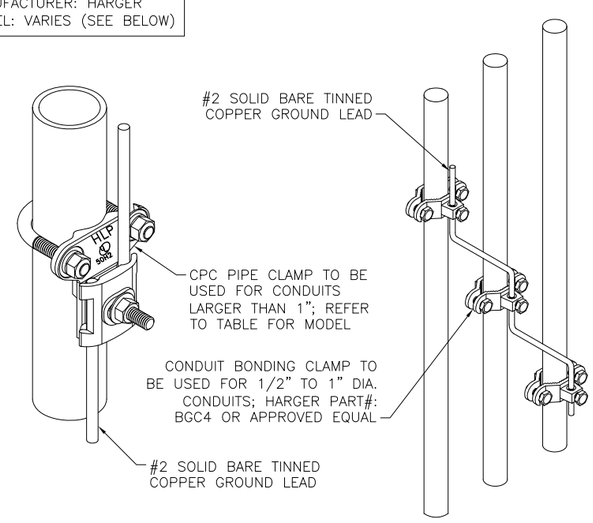

PART#	NOMINAL PIPE SIZE RANGE	PIPE OUTSIDE DIAMETER
CPC1/1.25	1"-1.25"	0.9375"-1.7"
CPC1.5/2	1.5"-2"	1.25"-2.4"
CPC2.5/3	2.5"-3"	2.5"-3.5"
CPC3.5/4	3.5"-4"	3.375"-4.5"
CPC5/6	5"-6"	4.75-6.63"

5 CONDUIT GROUNDING

SCALE: N.T.S.

SITE PRO 1 PIPE GROUND CLAMPS		
PART#	REBAR DIA. RANGE	WIRE RANGE
KP-1	1/2" TO 1"	10 SOL-2 STR
KP-2	1-1/4" TO 2"	10 AWG TO 2 AWG
KP-4	2-1/2" TO 4"	10 SOL TO 2 STR

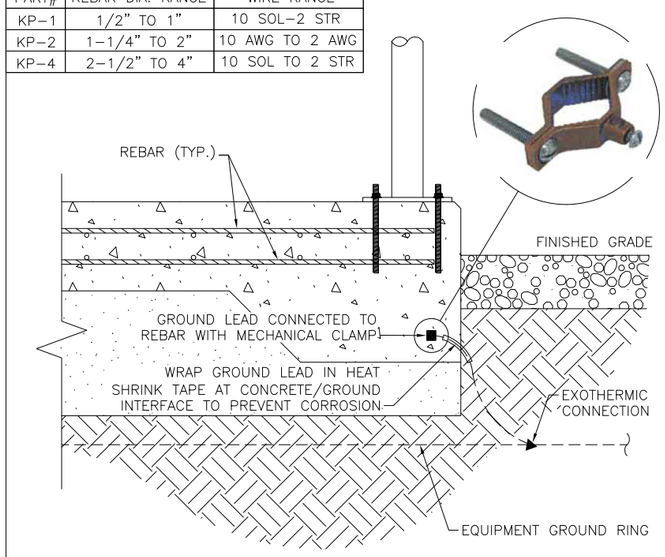

NOTES:

1. FOUNDATION SHOWN INS TYPICAL. SEE TOWER FOUNDATION PLANS FOR REINFORCEMENT DETAILS.
2. FOUNDATION GROUNDING PER NEC 250.52(3)(A). GROUNDING CONNECTIONS TO BE COVERED BY A MINIMUM OF 3" CONCRETE AND BE MADE TO A MIN. 20' CONTINUOUS REBAR, IF POSSIBLE.

6 EQUIP. PAD FOUNDATION GROUNDING

SCALE: N.T.S.

PREPARED FOR:

verizon

CHICAGO SMSA LIMITED PARTNERSHIP
D/B/A VERIZON WIRELESS
1701 GOLF ROAD
TOWER 2, SUITE 400
ROLLING MEADOWS, IL 60008

SITE NAME:
WHITEWATER SOUTH
SITE NUMBER:
765538

SITE ADDRESS:
797 INDIAN MOUND PARKWAY
WHITEWATER, WI 53190
WALWORTH COUNTY

STAMP:

WISCONSIN
LUIS MENDOZA
E-49916
LADERA RANCH
CALIFORNIA
PROFESSIONAL ENGINEER

05/08/24

MOUNTAIN, LTD.
ENGINEERING

DRAWN BY:	DP
APPROVED BY:	LM
DATE DRAWN:	04/30/24

REVISION

NO	DESCRIPTION	BY	DATE
A	ISSUED FOR REVIEW	DP	05/06/24
0	ISSUED FOR CONSTRUCTION	DD	05/08/24

SHEET TITLE:
GROUNDING DETAILS

SHEET NUMBER:
E2.1

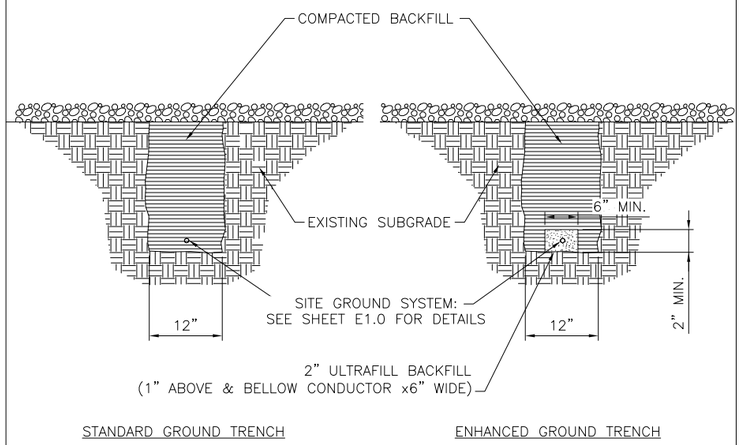

NOTES:
1. GROUNDING TRENCHES TO BE BACK FILLED WITH NATIVE SOIL.
2. COMPACT BACK FILL TO 95% MODIFIED PROCTOR.
3. CONTACT PSC MINIMUM 24HRS NOTICE PRIOR TO BACK FILLING TO ALLOW FOR INSPECTION.

1 GROUND TRENCH
SCALE: N.T.S.

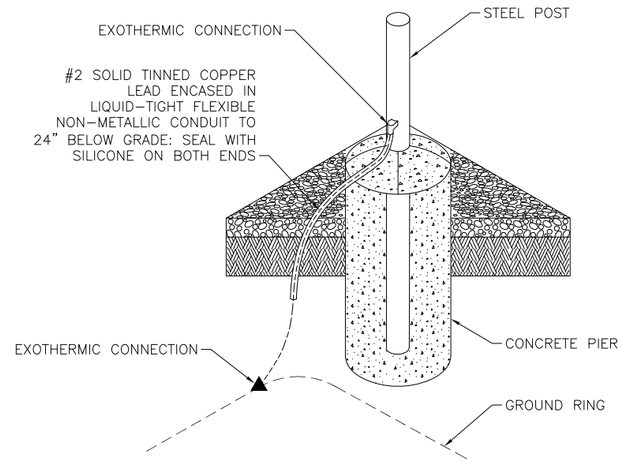

2 POST GROUNDING
SCALE: N.T.S.

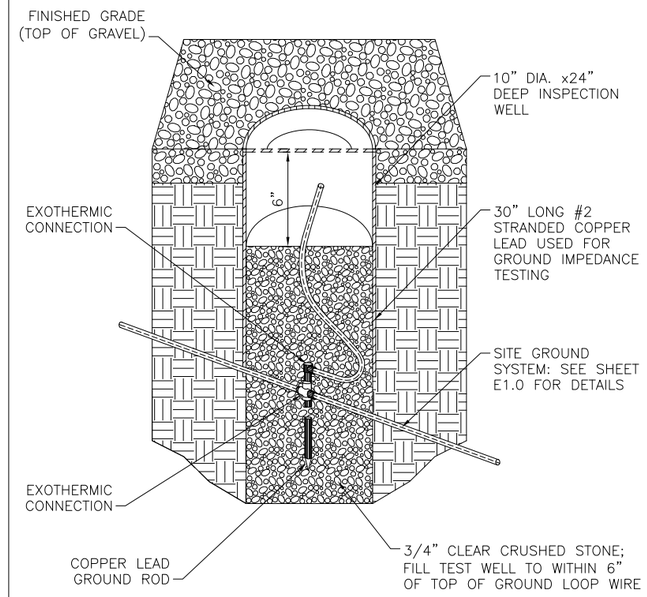

3 INSPECTION WELL
SCALE: N.T.S.

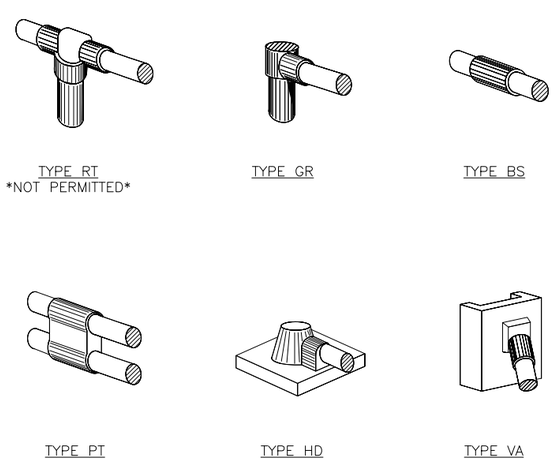

NOTES:
1. EXOTHERMIC "TYPES" SHOWN ARE EXAMPLES. CONSULT WITH PROJECT MANAGER FOR OTHER POSSIBLE TYPES OF EXOTHERMIC CONNECTIONS THAT CAN BE USED IN STANDARD OR SPECIALLY DESIGNED GROUNDING PLANS.
2. CONTRACTOR TO PROVIDE ALL REQUIRED EXOTHERMIC CONNECTIONS.

4 EXOTHERMIC CONNECTIONS
SCALE: N.T.S.

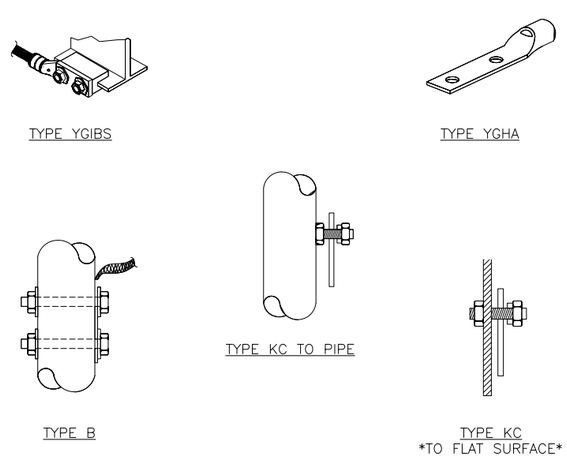

NOTES:
1. MECHANICAL "TYPES" SHOWN AREA EXAMPLES. CONSULT WITH PROJECT MANAGER FOR OTHER POSSIBLE TYPES OF MECHANICAL CONNECTIONS THAT CAN BE USED IN STANDARD OR SPECIALLY DESIGNED GROUNDING PLANS.
2. CONTRACTOR TO PROVIDE ALL REQUIRED MECHANICAL CONNECTIONS.

5 MECHANICAL CONNECTIONS
SCALE: N.T.S.

6 NOT USED
SCALE: N.T.S.

PREPARED FOR:

verizon

CHICAGO SMSA LIMITED PARTNERSHIP
D/B/A VERIZON WIRELESS
1701 GOLF ROAD
TOWER 2, SUITE 400
ROLLING MEADOWS, IL 60008

SITE NAME:
WHITEWATER SOUTH
SITE NUMBER:
765538

SITE ADDRESS:
797 INDIAN MOUND PARKWAY
WHITEWATER, WI 53190
WALWORTH COUNTY

STAMP:

WISCONSIN
LUIS MENDOZA
E-49916
LADERA RANCH
CALIFORNIA
PROFESSIONAL ENGINEER
05/08/24

MOUNTAIN, LTD.
ENGINEERING

DRAWN BY:	DP
APPROVED BY:	LM
DATE DRAWN:	04/30/24

REVISION

NO	DESCRIPTION	BY	DATE
A	ISSUED FOR REVIEW	DP	05/06/24
0	ISSUED FOR CONSTRUCTION	DD	05/08/24

SHEET TITLE:
GROUNDING DETAILS

SHEET NUMBER:
E2.2

IF LESSEE SERVICE IS METERED AT A MULTI-METER GANG OR IF SERVICE IS PULLED FROM AN EXISTING BUILDING, DO NOT GROUND NEUTRAL TERMINAL TO EARTH GROUND AND DISCONNECT CONNECTION BETWEEN GROUND & NEUTRAL

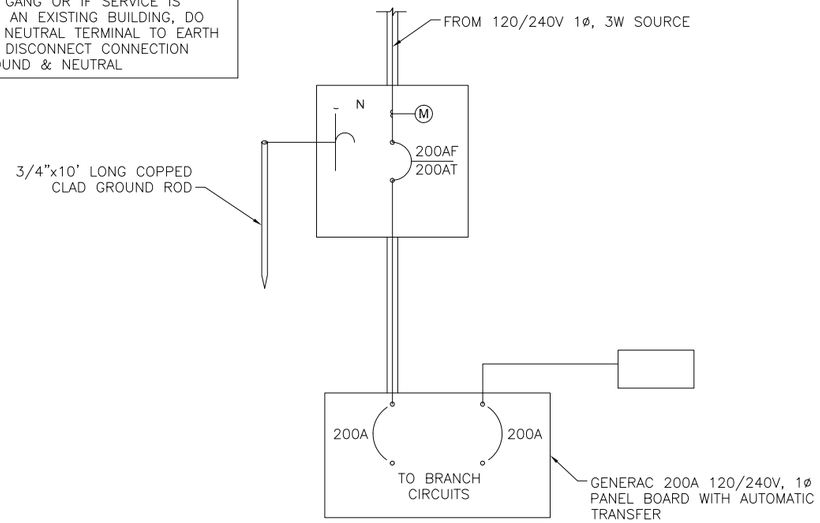

NOTE:
1. STANDARD DIAGRAM PROVIDED BY CLIENT. INCLUDED HERE FOR CONVENIENCE ONLY.

1 ELECTRIC LINE DIAGRAM
SCALE: N.T.S.

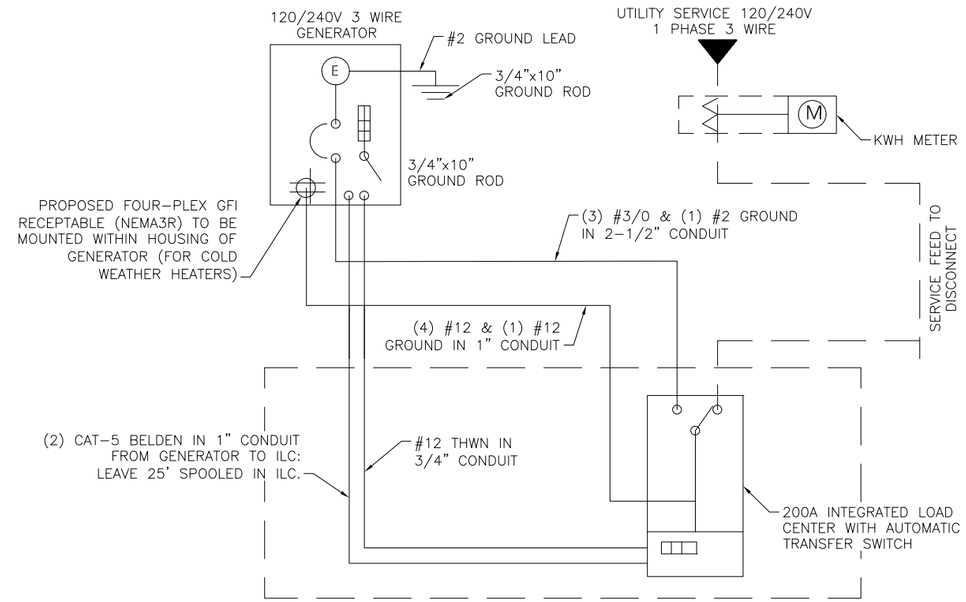

NOTE:
1. STANDARD DIAGRAM PROVIDED BY CLIENT. INCLUDED HERE FOR CONVENIENCE ONLY.

2 GENERATOR SINGLE LINE DIAGRAM
SCALE: N.T.S.

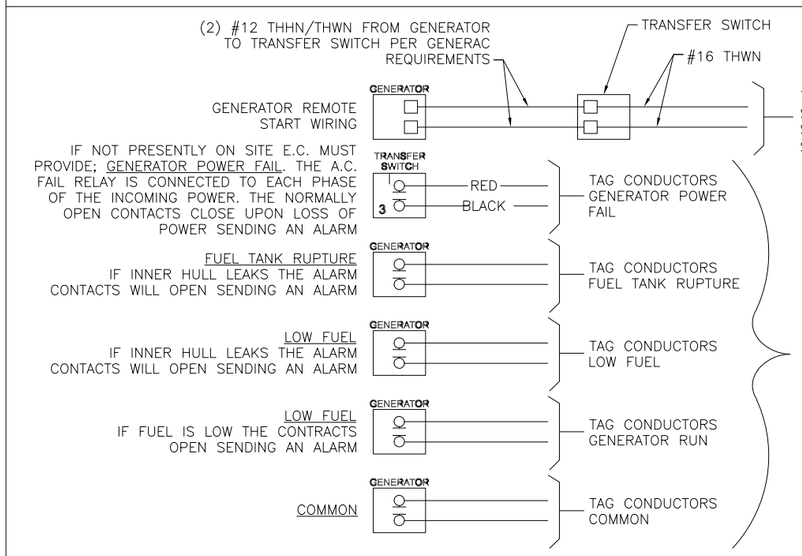

NOTES:
1. STANDARD DIAGRAM PROVIDED BY CLIENT, INCLUDED HERE FOR CONVENIENCE ONLY.
2. ELECTRICAL CONTRACTOR TO PULL (1)#16 AWG SOLID RED AND (1)#16 AWG SOLID BLACK FROM THE TRANSFER SWITCH TO ALARM WIRING BLOCK FOR REMOTE START.
3. ELECTRICAL CONTRACTOR TO PULL ALL ALARM LEADS TO EXISTING ALARM WIRING BLOCK. LEAVE A MINIMUM OF 24" PIGTAILS AT ALARM WIRING BLOCK AND TAG CONDUCTORS AS INDICATED. TERMINATIONS ON ALARM POINT WIRING BLOCK BY OTHER. CONDUCTORS CAN BE RUN EXPOSED. THEY SHALL BE BUNDLED NEATLY USING TIES AND SUPPORTED AT 24" INTERVALS FOR NEAT INSTALLATION.

3 GENERATOR ALARM WIRING
SCALE: N.T.S.

AC POWER PANEL No. 1 (PROPOSED)											
120/240 V, 1-PH, 3W, 200A											
LOCATION	PLATFORM		MOUNTING		SURFACE			ENCLOSURE:			NEMA 3RA
	MAIN BREAKER RATING (A):				200			SYSTEM VOLTAGE:			240
	AVAILABLE FAULT CURRENT				7.6 kA			SHORT CIRCUIT WS RATING			65 Ka
DESCRIPTION	VA	C/NC	BKR	POS. #	L1	L2	POS. #	BKR	C/NC	VA	DESCRIPTION
RECTIFIER 1	1250		40/2	1	2500		2	40/2		1250	RECTIFIER 5
	1250			3		2500	4			1250	
RECTIFIER 2	1250		40/2	5	2500		6	40/2		1250	RECTIFIER 6
	1250			7		2500	8			1250	
RECTIFIER 3	1250		40/2	9	2500		10	40/2		1250	RECTIFIER 7
	1250			11		2500	12			1250	
RECTIFIER 4	1250		40/2	13	2500		14	40/2		1250	RECTIFIER 8
	1250			15		2500	16			1250	
LIGHTS	300		20/1	17	660		18	20/1		360	CHARLES GFCI
GENERATOR BATTERY	1000		20/1	19		1360	20	20/1		360	GENERATOR GFCI
BLANK				21	0		22				BLANK
BLANK				23		0	24				BLANK
PHASE TOTALS (VA):					10660	11360					
CURRENT PER PHASE (A):					89	95		AMPS/PHASE CANNOT EXCEED MCB RATING			
PANEL TOTAL (VA):					22020			LEGEND: C=CONTINUOUS, NC = NON CONTINUOUS			

SURFACE MOUNTED NEMA 3R W/ DOOR
22K AIC BREAKERS
(CONTRACTOR SHALL VERIFY AIC RATINGS WITH LOCAL POWER CO.)

4 PANEL SCHEDULE
SCALE: N.T.S.

PREPARED FOR:

verizon

CHICAGO SMSA LIMITED PARTNERSHIP
D/B/A VERIZON WIRELESS
1701 GOLF ROAD
TOWER 2, SUITE 400
ROLLING MEADOWS, IL 60008

SITE NAME:
WHITEWATER SOUTH
SITE NUMBER:
765538
SITE ADDRESS:
797 INDIAN MOUND PARKWAY
WHITEWATER, WI 53190
WALWORTH COUNTY

STAMP:

WISCONSIN
LUIS MENDOZA
E-49916
LADERA RANCH
CALIFORNIA
PROFESSIONAL ENGINEER
05/08/24

MOUNTAIN, LTD.
ENGINEERING

DRAWN BY:	DP
APPROVED BY:	LM
DATE DRAWN:	04/30/24

REVISION

NO	DESCRIPTION	BY	DATE
A	ISSUED FOR REVIEW	DP	05/06/24
0	ISSUED FOR CONSTRUCTION	DD	05/08/24

SHEET TITLE:
ELECTRICAL DETAILS

SHEET NUMBER:
E2.3