OFFICERS:

Robert G. Lodge
President

Emmett Lodge
Secretary/Treasurer

GSA Contract Holder

MCKAY LODGE CONSERVATION LABORATORY

PROBITATE SAPIENTIA ET OPERE PRAESTAMUS

EST 1989

Art on Paper
Documents
Paintings & Murals
Mosaics
Sculpture & Historic Objects
Public Art
Historic Fountains
Monuments
Architectural Elements
Military & Industrial Artifacts

Specialists in Industrial Coatings
Specialists in all Metals
Specialists in Stone

CONDITION ASSESSMENT AND TREATMENT RECOMMENDATIONS

The Birge Fountain
1903, Produced by the J.W. Fiske Co. New York
Height 17.5 feet, Diameter 18 feet
Cast iron, cast zinc elements replaced by later bronze castings

LOCATION: Flat Iron Park, Whitewater, Wisconsin

PROJECT NO. 17014

ADDRESS: The Whitewater Landmarks Commission
c/o Cameron Clapper
City Manager
Whitewater, Wisconsin 53190

10915 Pyle South Amherst Road, Oberlin, Ohio 44074
Phone: 440-774-4215 Fax: 440-775-1368 Email: mckaylodge@gmail.com

CONDITION ASSESSMENT AND TREATMENT RECOMMENDATIONS

The *Birge Fountain* was inspected on May 19, 2017 by James Gwinner, Conservator of Sculpture and Public Art, of McKay Lodge Fine Arts Conservation Laboratory, Inc. The inspection was to determine the current condition of the fountain, provide a condition assessment, and a summary of key issues including cost estimates for future maintenance and repairs. As part of this assessment, interviews were conducted during the inspection with members of the Whitewater Landmarks Commission and the Birge Fountain Committee. Historic documents provided were also studied.

This condition assessment is divided into following sections:

1. DOCUMENTATION
2. HISTORIC OVERVIEW OF FOUNTAIN
3. CURRENT CONDITION
4. PAST REPAIRS
5. DETERMINE THE NEED FOR WINTER PROTECTION
6. TRIAGE TREATMENT NEEDED
7. CYCLICAL OPERATION MAINTENANCE PLAN
8. LONG TERM TREATMENT NEEDS
9. ADDITIONAL DOCUMENTS

(1) DOCUMENTATION

The report is accompanied by 18 "key" digital images printed and as files on an enclosed Verbatim® Ultralife™ Gold Preservation disc (DVD. The images are referenced in the text below by image numbers. The images are printed on Epson® archival paper with Epson® Ultrachrome K3 lightfast inks.

(2) HISTORIC OVERVIEW OF THE FOUNTAIN

The *Birge Fountain* (Image 01) has been well maintained for the past 114 years, and its existence is proof of that care. Large numbers of fountains of this type, cast iron with decorative sculptural elements cast in zinc, were produced and erected throughout the United States in the years 1880-1930. Many of these fountains were in need of repairs after 40-60 years, and of those, quite a few were given to scrap drives during WWII. After the war, the fountains which remained continued to deteriorate, and many components were lost or the fountains were turned into planters or destroyed. The records of the Birge Fountain show routine maintenance, painting, plumbing, and replacement of fragile zinc elements with sturdy cast bronze replicas of the cherubs in 1985 and the Maid of the Mist in 2000. The replacement of the zinc elements with bronze replicas was a major undertaking, and it represents the dedication that Whitewater has put forth to keep the fountain operating in its historic location.

Image 01: Overall View of Fountain and Surroundings

At this time, with specific preventive maintenance and care for the bronze elements, the fountain could continue in its present condition for ten or more years. This maintenance allows time to accumulate funds for a complete refurbishment of all elements, and develop a long term solution to maintain the fountain for years to come. A more complete description of the fountain and its elements are provided below (See Images 02-03).

Fountain Description:

The fountain consists of a concrete filled cast iron wall in 12 sections (Image 02) which creates the fountain pool.

Image 02: Detail of Fountain Base

The central element within the pool consists of a basic cast iron box shape surmounted with a cast iron pedestal supporting a large cast iron basin incorporating a cast iron pedestal which supports the cast bronze Maid of the Mist sculpture. The cast iron box is surmounted by four cast bronze Cherub sculptures (Image 03).

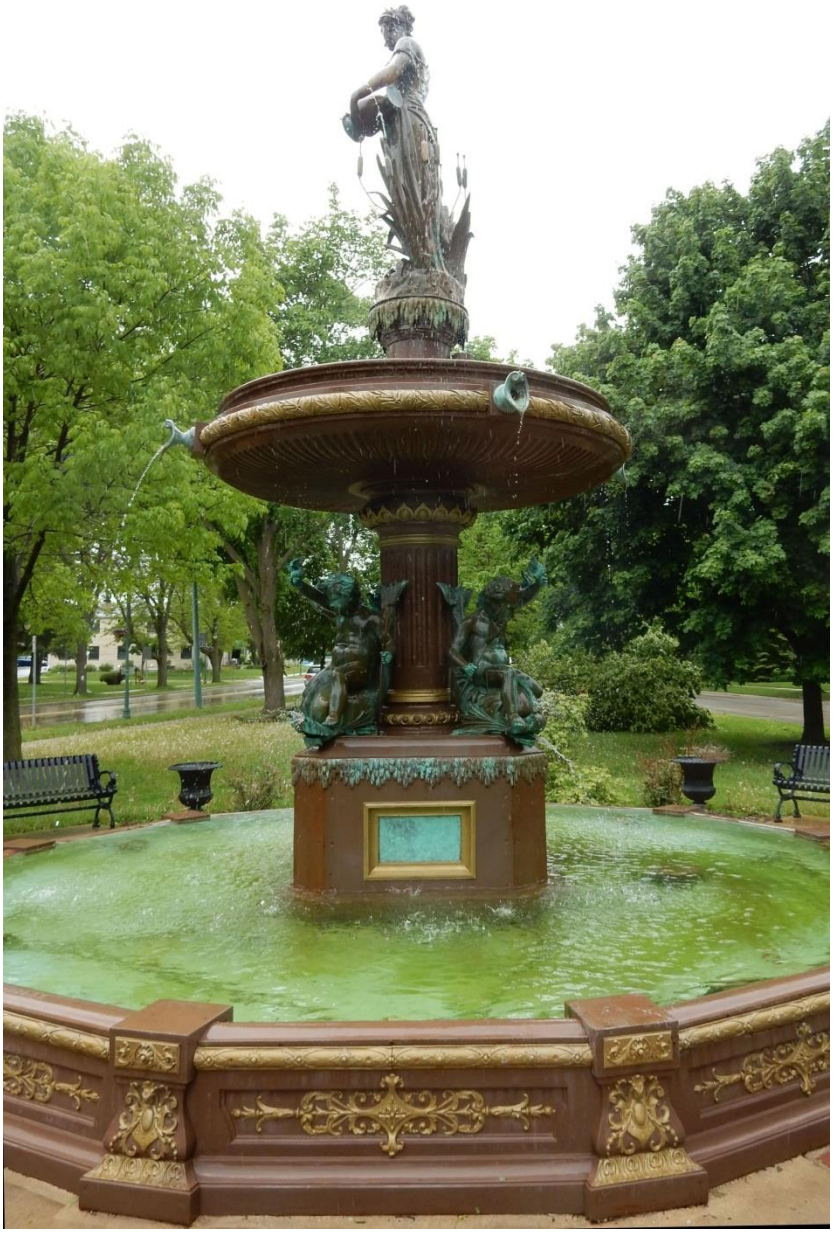

Image 03: Detail of Center of Fountain

(3) CURRENT CONDITION

The current condition is discussed under the following sections: cast iron elements, bronze sculptures, water flow, pH management, water costs, water chemistry, mechanical controls, electric wiring, and security cameras (Images 04-13).

<u>Cast Iron:</u>

Based on examination of the exterior of the central element and the pool wall, the current exterior coatings show wear, and they need to be repainted to recreate a visually attractive and complete surface (Images 04, 05). The inspection of the interior central fountain element exhibits extensive corrosion and trace, if any, coating present (Image 06). It is assumed that based on this examination, the interior of the pool wall cast iron elements is also unpainted and it is corroding too.

Image 04: Detail of Worn Coating

Image 05: Another Detail of Worn Coating; Manufacturer Name

Image 06: Detail of Corrosion in Fountain Central Element

Bronze Sculptures:

The cast bronze sculptures require repatination and new protective coatings. The current appearance is indicative of uncontrolled corrosion, causing disfiguring streaks of reddish and green corrosion products on the *Maid of the Mist* (Image 07).

Image 07: Detail of Disfiguring Corrosion

The disfiguring corrosion, when wetted, becomes saturated, and in turn minimizes the appearance of the corrosion though it is still present (Image 08).

Image 08: Detail of Corrosion Upon Wetting the Surface with Water

The Cherub figures exhibit a bluer appearance, which so brashly contrasts with the brown metal color. The result is the visual obstruction of the sculptural forms and details (Image 09).

Image 09: Detail of Blue corrosion on Cherub

Water Flow:

Water flows from several locations on the fountain. One area is from the Cattails and the Jug held by the *Maid of the Mist* (Image 10).

Image 10: Maid of Mist, water operating

Water also flows from four equally spaced outlets on the edge of the bowl and from the mouths of the four Dolphins as well as sprays from the nostrils of the Dolphins (Image 11). This water display is consistent with the 19th and early 20th century aesthetic for this type of fountain. The nostril sprays are unique to this fountain and they also appear to easily plug up with debris.

Image 11: Detail of Cherub Riding a Dolphin

The water is supplied by a submersible pump located within the box base of the central fountain element. The pump sits within a plastic milk crate surrounded by polyester filter mesh to keep debris out of the pump and provide some filtering effect on the water flow (Image 12).

Image 12: Detail of Submersible pump

<u>pH Management:</u>

Water pH should be between 7 and 8, and it was within this range when tested with pH test strips (Image 13) on the day of the inspection. It may be that the water was this pH because of the rain at the time of the inspection. A pH between 7 and 8 will keep iron in suspension in the water. A pH above 8 will allow iron to come out of suspension, leading to rust staining of the exterior of the central element and the pool.

Image 13: Example of pH Test Strips

Water Costs:

The water volume in the pool is approximately 381 cubic feet or 2,900 gallons. Based on the water costs of the Whitewater Department of Utilities, water consumption for this fountain for 5 months running with water drain and refill every week and accounting for evaporation of 1/2 inch per day is $450.00-500.00 per year.

Water Chemistry:

Attempting to control water chemistry (like the pH) with chemicals is not effective for a fountain with a small volume of water such as the Birge Fountain. If the water is not drained and refilled on a regular basis the water will quickly become saturated with minerals. These minerals will fall out of suspension and begin to deposit as a white accretions on the surface of the central element and pool walls. Weekly water changes may be effective in order to lessen deposits. The use of a water softener to lessen mineral concentrations is effective and should be continued.

Mechanical Controls:

The simple mechanical controls and submersible pump are adequate for this fountain and easily modified and replaced when necessary. Barbed fittings and flexible hose is an optimal solution. The plumbing system must be able to have the pump removed for the winter, and the flexible lines and valves blown out with compressed air so that water does not stay in them and freeze. If this action is not taken, frozen water in the lines and valves will cause permanent damage. All ferrous plumbing fittings and piping should be replaced with non-ferrous fittings and pipe.

Electrical Wiring and Lights:

There are submersible lighting fixtures in the pool and a submersible pump. The wiring is adequate for the installation, but exterior lighting outside of the pool is a highly recommended alternative; this change would greatly mitigate maintenance issues. The Fountain Committee should be engaged to discuss the aesthetics of lighting the fountain with spot lighting mounted to poles placed outside of the fountain.

Security Cameras:

There were no security cameras at the time of the inspection, but the fountain has had cameras in the past. If exterior lighting poles are considered then security cameras could be installed on the poles. In order to install a camera system with cameras good enough to discern faces at night a reputable security camera company should be consulted. Technology is constantly improving and costs have become increasingly more affordable for these type of systems.

(4) PAST REPAIRS

Past repairs allow the fountain to exist today. All of the repairs appear to have been adequate to exceptional. Repairs are discussed below in terms of reproductions and preservation practices.

Reproductions:

Cast bronze reproductions of the Cherubs and Maid of the Mist which replaced the original zinc elements were an excellent decision by the Committee. The original elements composed of soldered together zinc castings, have a finite lifetime particularly in a wet fountain environment.

Preservation practices:

Based on documentation provided to the conservator by the Fountain Committee, it is noted that during the history of the fountain acid washing to remove mineral deposits and sandblasting to prepare surfaces for repainting occurred. More frequent water changes and continued use of the water softener should lessen the extent of white mineral deposits.

At this time spot air-abrasive cleaning (sandblasting) and touch up of paint coatings on the cast iron elements will extend the life of the current look for approximately 10 years. The cast bronze elements should be cleaned to bare metal with a micro-abrasive/water/air method such as the JOS method. This will allow the bronze to be repatinated to look like rich bronze colored metal. The protective coating for cast bronze in a fountain environment would be a lacquer coating (Permalac 2K, Peacock Laboratories, Inc.).

By 2027 it is recommended that the fountain be completely taken apart into its component pieces to be entirely air abrasive cleaned to a near white metal finish on the cast iron elements and these items should be coated inside and out with a high build zinc primer (Z.R.C. Cold Galvanizing, ZRC Worldwide, Inc.) followed by an epoxy intermediate coat, followed by a final topcoat of a silicon alkyd (Amerlock PSX700, PPG Marine Coatings).
The bronze elements should be treated as noted above.

In our experience working on fountains of over 140 years old, we have determined that the mechanical element of the fountain requires replacement in its entirety every 30 years. Coatings typically have a maximum life outdoors of 20 years at best, and in a fountain environment, the service period of a coating is realistically 10-15 years. These time frames may be extended with regular touch-up maintenance as necessary, but in general, 30 years should be considered the benchmark for long-term maintenance.

(5) DETERMINE NEED OF WINTER PROTECTION OF FOUNTAIN

There is no need for any other winter treatment or protection except for: draining the pool and bowl and leaving the drains open in the winter as well as removing the submersible pump, opening all of the valves and blowing out the manifolds and flexible hoses with compressed air. Further discussion is provided below.

Annual Removal Indoor Storage:

For the annual removal and indoor storage, it is recommended that the bronze elements be left insitu.

Seasonal coverage, vandalism prevention:

Seasonal coverage and vandalism prevention is not needed at this time.

Contractors, Materials, and Costs:

Contractors, materials, and related costs are not necessary for this section.

(6) TRIAGE TREATMENT

The following elements are listed in order for those that are most critically in need of treatment to the least in need of treatment.

Cast Bronze Elements:

Micro-abrasive/water/air clean (JOS method) the bronze elements to bare metal is recommended. The elements should then be repatinated with potassium sulfide/water solution (Liver of Sulfur) and the color reduced with a mild abrasive pad to create a rich "statuary bronze" color, a warm brown tone. A protective coating of lacquer made for a fountain environment (Permalac 2K, Peacock Laboratories, Inc.) should then be applied.

Cast Iron Elements:

Spot blasting with conventional sandblasting utilizing a non-silica containing abrasive (Starblast, Chemours Co., Inc.) to a near white metal finish (SSPC-SP10/NACE No. 2, Near-

White Blast Cleaning). Spot prime with a zinc primer (Z.R.C.Cold Zinc Primer, ZRC Worldwide, Inc.) is suggested for treatment of cast iron elements. Touch-ups would then be completed with the paint that has been previously used. Please refer to "Long Term Treatment…" for further details.

Pump:

The pump needs replacement with a pump suited for fountain that has better volume and head (PFU71, Powerflo Pumps and Systems, Inc. see product cut sheet).

Lighting:

The underwater pool lighting should be removed, and 3-4 external poles and light the fountain for the poles with newer LED lighting should be installed (such as Spotlights, 6, Radiax 21 Watt LED Spotlight).

Recommended Contractors, Materials, and Costs for above repairs:

Element	**Personnel/Material**	**Costs**
Cast Bronze Elements	Professional conservator team	$38,000-43,000.00
Cast Iron Elements	Professional conservator team	$20,000-25,000.00
Cast Iron Elements	Local painting contractor	$15,000-20,000.00
Pump PFU71	City to install in place of current pump when current pump fails	$1,400.00
Lighting	Spotlights, 6, Radiax 21 Watt LED Spotlight	$2,500.00
Lighting	Poles, 3 exterior light poles	$5,000.00
Lighting	Installation estimate local contractor	$4,500.00

(7) CYCLICAL OPERATION MAINTENANCE PLAN

Optimal Operation and Maintenance Specs:

The daily maintenance required is removing leaves and seed pod debris out of the pool with a net. The weekly maintenance requires the pool to be drained, washed, and then refilled.

For seasonal maintenance directions, read the detailed instructions below. Factors (such as personnel and time required for maintenance) are provided to help determine maintenance and material costs.

Seasonal Maintenance Instructions:

Winter Shut Down:

1. Drain, wash down fountain and pool with hot water pressure washer
2. Leave bowl drain open, open all valves, remove pump from plumbing and drain water out in leaving in base.
3. Blow out water manifolds and flex piping with compressed air.

Spring Start Up:

1. Test pump
2. Hook up pump to plumbing. Wash out pool, bowl and exterior. Put plug into bowl.
3. Fill fountain start pump and adjust valves.

Specific Water pH Levels, Optimal Flow Levels

1. Water pH should be between 7 and 8.
2. Correct flow for optimal level*

*Currently the flow is slightly lacking. The fountain looks good but the outflows on the edge of the bowl could be a little higher. The nostril sprays are unique to this installation. If they are important to the aesthetic of the fountain keep them in place. The outflows at the mouth of the dolphins should be bent to provide a wider effective "tongue" of flow.

Address Value of Written Log of Regular and Special Maintenance:

1. Maintain written log of general maintenance and treatment*

*A file should be created for the fountain to keep dated photographs of condition changes, minutes of Fountain Committee meetings, reports from artists, craftsmen and conservators who

work on the fountain. Document the work performed by the City and include that information in the permanent file.

Recommended Personnel and Hours for Maintenance:

Personnel	**Hours**
Daily, local City, 1 man	1 man hour
Weekly, local City, 2 men, 4 hours	8 man hours
Winter shut down or Spring start up, local City, 2 men, 8 hours	16 man hours

(8) DISCUSSION LONG TERM TREATMENT NEEDS FOR SAKE OF CAPITAL IMPROVEMENT PLAN, BUDGETING AND FUNDRAISING NEEDS

The Birge Fountain can continue to exist with maintenance for a finite number of years, but inevitably it will need to be completely disassembled, stabilized and fully restored. Replacement of the original zinc Maid of the Mist and the Cherubs with cast bronze copies has solved the problem of losing them entirely.

The cast iron central element and pool walls are not painted on the inside. The cast iron is corroding from the inside out. The process is slower that with other ferrous metals such as mild steel but it is a major concern for the life of the fountain.

Repairing, restoring and stabilizing the cast iron elements will require complete disassembly of the fountain into its component parts, repair and restoration of all components and application of paint coatings inside and out that will slow or eliminate the corrosion of the cast iron components.

Images are attached (Images 14-18) of the restoration of the Kearny Park Fountain located in Muskegon, Michigan to illustrate the type of work that replacement of the pool wall entails.

Simple is always better and in the case of the Birge Fountain the simple submersible pump, simple valves and flexible hose supply lines are readily maintained and replaceable when worn out.

One item that is recommended is an overflow drain (PEM 62202, PEM Fountain Co. LTD). This is a removable standpipe, the top of which is the height from the pool floor of the desired water level. When draining the pool is desired the standpipe is lifted from its socket in the pool floor and the pool water drains out. This type of standpipe eliminates flooding of the fountain from rain and makes washing down dirt and debris much easier than pumping out the water.

Estimated Life Expectancies, Water, Electric, Cherubs, Maid of Mist, Cast Iron Basin:

Water System:

The water system as installed can continue as it is. Regular maintenance as parts wear out and are replaced is normal. Replacing the low flow sump pump when it wears out with a better quality pump made specifically for a fountain is advisable (PFU71, Powerflo Pumps and Systems, Inc.).

Electrical:

The electric as installed appears to be working well. It should have 20amp circuit to operate the fountain pump (PFU71) specified in the Water System. It is advisable to remove the submersible pool lighting and to illuminate the fountain from exterior poles.

Cherubs:

The cherubs should be air/water/abrasive cleaned (JOS system utilizing micro abrasive). The cleaned bronze should be patinated a statuary brown color and coated with a protective coating of lacquer (Permalac 2K, Peacock Laboratories, Inc.).

Maid of the Mist:

Treat the same as the Cherubs

Cast Iron Central Element:

The central element can continue for 10 years with typical cleaning and touchup of current paint coatings as funds are raised to perform complete disassembly, corrosion removal, repainting and reassembly of the element.

Cast Iron Pool:

The cast iron pool can continue for 10 years an noted above for the Central Element as funds are raised. The pool should be completely disassembled and all cast iron elements treated as noted above for the central element.

Concrete Pool:

The concrete part of the pool should be completely made anew at the 10 year mark (2027). This would entail demolishing the pool, pouring a new slab with integral central footer to support the central element and installing integral PVC chases for electric supply to the pump. The restored cast iron walls would then be mounted to the new slab and the interior of the cast iron walls would be lined with polyethelene drain mat to relieve freeze/thaw pressures. The interior of the cast iron walls would be lined with a dry-pack concrete mixture to create the interior concrete wall of the fountain (Images 14-18 typical, Muskegon Michigan, Kearny Park Fountain).

Recommended Contractors and Material Costs:

Conservation professionals familiar with this type of work should perform the work along with local concrete contractors, electricians and plumbers as necessary.

Costs are estimated to be between $100,000.00-125,000.00.

(9) ADDITIONAL DOCUMENTS

Technical Data Sheets of Recommended Lighting and Pump and Overflow

1. Spotlights, 6, Radiax 21 Watt LED Spotlight

2. Pump PFU71

3. PEM 62202, PEM Fountain Co. LTD

KICHLER

PROJECT:
TYPE:
ORDERING # :
COMMENTS:

ARCHITECTURAL OUTDOOR

Design Pro LED Accent 29W

16204 (29W 10˚ Spot) 16205 (29W 35˚ Flood) 16208 (29W 60° Wide)

FEATURES

- Three beam spread options put light where you want it.
- A range of Kelvin color temperature choices from pure white 3,000K to cool white 4,250K.
- Radiax™ Optics deliver the greatest lumens per watt in the industry for comparable fixtures.
- Constructed from durable, specification grade materials.

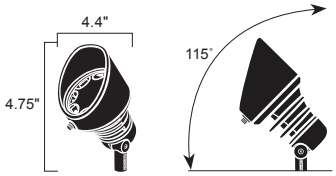

can be used in up or down position

ORDERING INFORMATION

EXAMPLE: 16204 AZT30, 16062 AZT, 16066 AMB
Product ordered is a 29W, 3000K, 10 degree spot accent light in Textured Architectural Bronze with a long cowl and an amber lens accessory.

PRODUCT	WATTAGE/STYLE	LIGHT SOURCE	FINISH	OPTIONS / ACCESSORIES
3000K PURE WHITE **10 Degree** 16204 AZT30 16204 BBR30 16204 WHT30 **35 Degree** 16205 AZT30 16205 BBR30 16205 WHT30 **60 Degree** 16208 AZT30 16208 BBR30 16208 WHT30 **4250K COOL WHITE** **10 Degree** 16204 AZT42 16204 BBR42 16204 WHT 42 **35 Degree** 16205 AZT42 16205 BBR42 16205 WHT42 **60 Degree** 16208 AZT42 16208 BBR42 16208 WHT42	*29W - 10 Degree Spot Beam Spread *29W - 35 Degree Flood Beam Spread *29W - 60 Degree Wide Beam Spread	**LED Specs** - Integrated LEDs & Driver - LEDs: High Output CREE® LEDs tightly binned for color uniformity - Color Temp. (CCT): 3,000K (-45/+130) Pure White 4,250K (-250/+250) Cool White - CRI: 3,000K - 80s 4,250K = High70s - 108-132V AC, 50-60 Hz - 40,000 Hours Lamp Life To L70 Specifications ** - Efficacy: 3,000K = 39Lm/W 4,250K = 47Lm/W **Wiring** - 8" of Usable 200˚C 18AWG Wire Leads **Included Mounting Accessories** N/A	**Marine Grade Powdercoats** **Cast Aluminum** **AZT** - Textured Architectural Bronze **Cast Brass** **BBR** - Bronzed Brass	**Mounting Options** **Flange For Surface Mounting** **15601AZT** - Textured Bronze Finish **15601BKT** - Textured Black Finish **15601BBR** - Bronzed Brass Finish **15601WHT** - Textured White Finish **Junction Box Mounting Bracket** **15609AZT** - Textured Bronze Finish **15609BKT** - Textured Black Finish **15609WHT** - Textured White Finish **Power Post®** **15276BKT** - Textured Black Finish **Lens Options** **16066AMB** - Amber Lens For a Warmer Hue **16066FRO** - Frosted Lens For Diffusing Light Where Needed **16066GRN** - Green Lens For Intensifying Foliage Colors **Cowl Options** **Long Cowl** **16062AZT** - Textured Bronze Finish **16062BBR** - Bronzed Brass Finish **360˚Cowl** **16063AZT** - Textured Bronze Finish **16063BBT** - Bronzed Brass Finish

KICHLER

PROJECT:
TYPE:
ORDERING # :
COMMENTS:

PHOTOMETRIC INFORMATION

PRODUCT	DISTANCE	FOOTCANDLES	BEAM WIDTH
10 Degree Spot 16204	8 Feet	394.5	1.6 Feet
	12 Feet	175.3	2.5 Feet
	24 Feet	43.8	4.9 Feet
	36 Feet	19.5	7.4 Feet
	48 Feet	11	9.8 Feet
	60 Feet	7	12.3 Feet
35 Degree Floodlight 16205	4 Feet	205.8	2.4 Feet
	8 Feet	51.5	4.8 Feet
	16 Feet	13.2	9.6 Feet
	24 Feet	5.9	14.4 Feet
	32 Feet	3.3	19.2 Feet
	40 Feet	2.1	24 Feet

Narrow Spot

10 Degree Spread

Flood

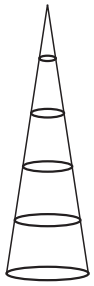

35 Degree Spread

NOTES

FCC Compliant

**Definition of 40,000 hours: Voluntarily following the accepted industry standard of L70, Kichler rates the entire lighting fixture system at 40,000 hours; with engineered electronics that will last at least 40,000 hours, superior optical engineering, and finally utilizing a design that operates at the optimal temperature thresholds for the LED chips. The end result is a complete light fixture that does not require replacement parts and will provide 70% or more of its original light output for at least 40,000 hours. It has been proven that the human eye can hardly detect any difference in light output when light output is at 70% or above of its original output.

Intertek

* 29W is The Halogen Equivalent of a 100W PAR38 Lamp
- Fixtures Must be Used With a Kichler ANSI/UL Power Supply
IES Files & LM-79 Data is available at www.landscapelighting.com.
LM-79 data is not available on our site.

We reserve the right to revise the design or components of any product due to parts availability or change in UL standards, without assuming any obligation or liability to modify any ANSI/UL Standards products previously manufactured, and without notice.

INSTALLATION, SERVICE & PARTS MANUAL

POWER-FLO
Pumps & Systems

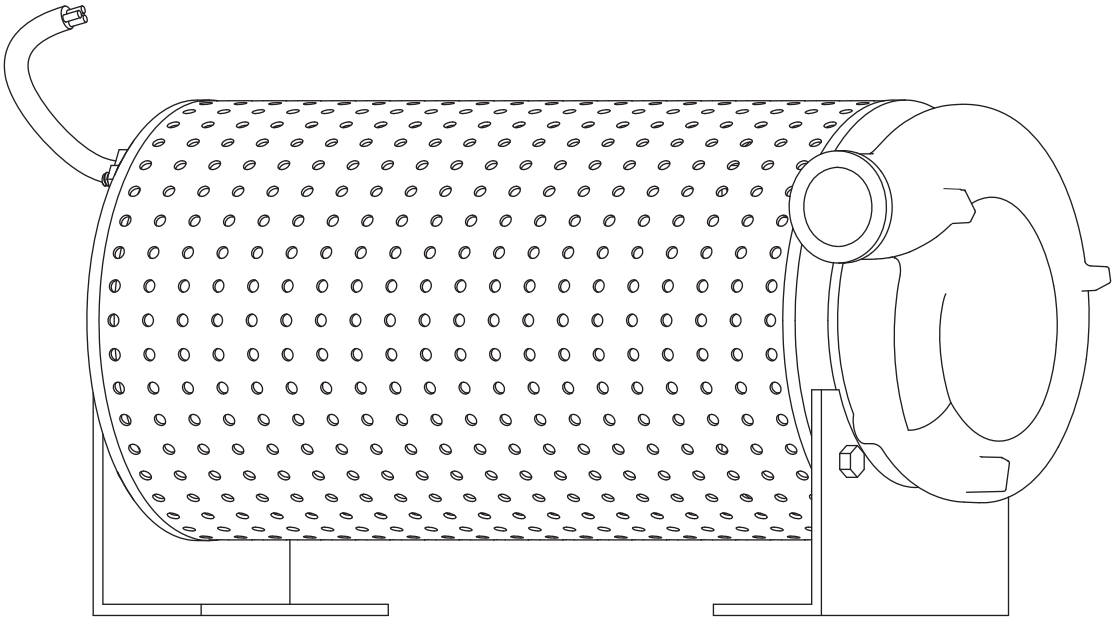

Series: PFU31 • PFU51, PFU71 • PFU102 PFU152 • PFU202

1/3, 1/2, 3/4, 1, 1-1/2, & 2HP
3450 RPM • 60 Hz
Submersible Fountain Pumps

General Safety Information

Before installation, read the following instructions carefully. Failure to follow instruction and Safety information could cause serious bodily injury, death and/or property damage. Each Power-Flo pump is individually factory tested to insure proper performance. Closely following these instructions will eliminate potential operating problems, assuring years of trouble-free service.

⚠ DANGER ***"Danger" indicates an imminenty hazardous situation which, if not avoided, WILL result in death or serious injury.***

⚠ WARNING ***"Warning" indicates an imminenty hazardous situation which, if not avoided, MAY result in death or serious injury.***

⚠ CAUTION ***"Caution" indicates an potentially hazardous situation which, if not avoided, MAY result in minor or moderate injury.***

IMPORTANT - Power-Flo Pumps and Systems is not responsible for losses, injury or death resulting from failure to observe these safety precautions, misuse, abuse or misapplication of pumps or equipment.

ALL RETURNED PRODUCTS MUST BE CLEANED, SANITIZED, OR RECONTAMINATED PRIOR TO SHIPMENT, TO INSURE EMPLOYEES WILL NOT BE EXPOSED TO HEALTH HAZARDS IN HANDLING SAID MATERIAL. ALL APPLICABLE LAWS AND REGULATIONS SHALL APPLY.

⚠ WARNING Installation, wiring, and junction connections must be in accordance with the National Electric Code and all applicable state and local codes. Requirements may vary depending on usage and location.

⚠ WARNING Installation and servicing is to be conducted by qualified personnel only.

⚠ DANGER Keep clear of suction and discharge openings. **Do not** insert fingers in pump with power connected.

⚠ WARNING Always wear eye protection when working on pumps. Do not wear loose clothing that may become entangled in moving parts

⚠ DANGER Pumps build up heat and pressure during operation. Allow time for pumps to cool before handling or servicing.

⚠ DANGER This pump is ***not*** intended for use in swimming pools or water installations where human contact with pumped fluid. Pumps when used as a decorative water fountain pump MUST be used in circuit protected by a Ground Fault Interrupter. Installations in Decoritive Fountains or Water Features provided for visual enjoyment MUST be installed per ALL State and Local codes

⚠ DANGER Risk of electric shock. To reduce risk of electric shock, always disconnect pump from power source before handling. ***Lock out power & tag.***

⚠ WARNING **Do not** us these pumps in water over 145˚F. **Do not** exceed manufactures recommended maximum performance, as this could cause the motor to overheat.

⚠ CAUTION For cool operations the suction chamber keeps motor 2/3 submerged at all times.

⚠ DANGER **Do not** lift, carry or hang pump by the electrical cables. Damage to the electrical cables can cause shock, burnes or death. **Never** handle connected power cords with wet hands. Use appropriate lifting device.

⚠ DANGER Failure to permanently ground the pump, motor and controls before connecting to power can cause shock, burns or death.

⚠ WARNING These pumps are **NOT** to be installed in locations classified as hazardous in accordance with the National Electric Code, ANSI/NFPA 70.

⚠ WARNING Bronze/brass fitted pumps may contain levels higher than considered safe for potable water systems. Government agencies have determined that leaded copper alloys should not be used in potable water applications.

IMPORTANT!
Prior to installation, record Model Number, MFG Date, Amps, Voltage, Phase and HP, from pump name plate for future reference. Also record the Voltage and Current Readings at Startup:

1 Phase Models	
Amps:	Volts:

Model Number: _____

MFG Date: _____

PHASE: _____ HP: _____

® Power-Flo is a registered trademark of Power-Flo Technologies Inc.
Other brand and product names are trademarks or registered trademarks of their respective holders.
Alteration Rights Reserved. 11/2007 - 2/08, 4/09, 6/09, 8/09, 3/10, 4/10, 5/10, 8/10, 1/11, 6/11

Specifications

DISCHARGE PFU31, 51, 71, 102	1-3/4" Outside Hose Connection, 1" NPT Inside Connection, 90° Rotation
LIQUID TEMPERATURE	145°F (63°C) Continuous
VOLUTE	Brass
INTERMEDIATE	Brass
HOUSING TUBE	304 Stainless Steel
HOUSING END PIECE	Brass
SCREEN	304 Stainless Steel
PUMP SUPPORTS	304 Stainless Steel
IMPELLER	1/3 & 1/2HP - Four Vane, Open, Brass 3/4 & 1 HP - Six Vane Open, Brass
SHAFT	416 Stainless Steel
O-RINGS	Buna-N
HARDWARE	300 Series Stainless Steel
SEAL	Single Mechanical, Carbon/Ceramic/Buna-N
POWER CORD	12 Ft.
MOTOR END BEARING	Single Row, Ball, Oil Lubricated
PUMP END BEARING	Single Row, Ball, Oil Lubricated
MOTOR	Oil Filled, Squirrel Cage Induction, NEMA B Design, Class H Insulation
SINGLE PHASE	Permanent Split Capacitor (PSC), Includes Overload Protection in Motor; Trip Off Temp. 248°F (120°C)

The design of the suction chamber keeps motor 2/3 submerged at all times for cool operation.

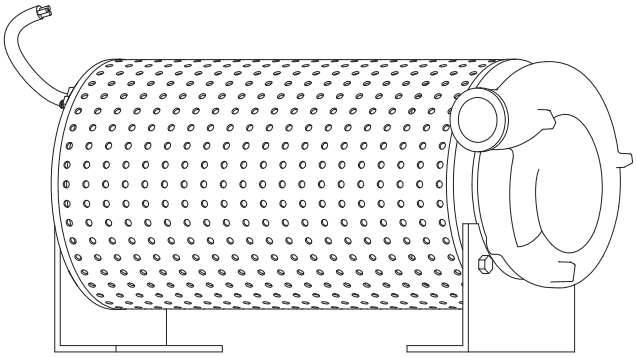

Vacuum Pressure Impregnation "VPI" Sealed Insulation System

VPI motor enhancement system was developed to greatly extend the winding life expectancy of an electric motor. The motor stator is loaded into a pressure vessel and immersed in the specialty selected varnish. All gas pockets located within the stator are evacuated under vacuum. The varnish is drawn into the stator core, completely occupying all voids in the winding. Following a series of processes, ending in a controlled bake, the winding is 100% impregnated and sealed.

VPI is greatly superior to the "dip and bake" method which may provide only 50% to 70% of effective insulation leaving voids and air pockets. VPI provides 100% solid mass structure which provides the greatest mechanical strength and a cooler running motor due to superior heat dissipation.

MODEL	HP	Hz	Volts/ Ph	RPM	Full Load Amps	Locked Rotor Amps	Winding Resistance MAIN -- START	NEMA Start Code	Cord Type	Cord Size	Cord O.D.
PFU31	1/3	60	115/1	3450	8.0	21.0	1.4 -- 8.6	J	SOW	16/3	0.395
PFU51	1/2	60	115/1	3450	9.5	21.0	1.0 -- 6.5	E	SOW	16/3	0.395
PFU71	3/4	60	115/1	3450	12.0	28.0	0.57 -- 5.78	D	SOW	16/3	0.395
PFU102	1	60	230/1	3450	7.0	21.0	2.01 -- 7.32	E	SOW	16/3	0.395

Winding resistance ± 5% at terminal block. Rated operation at ± 10% voltage at motor

Dimensions

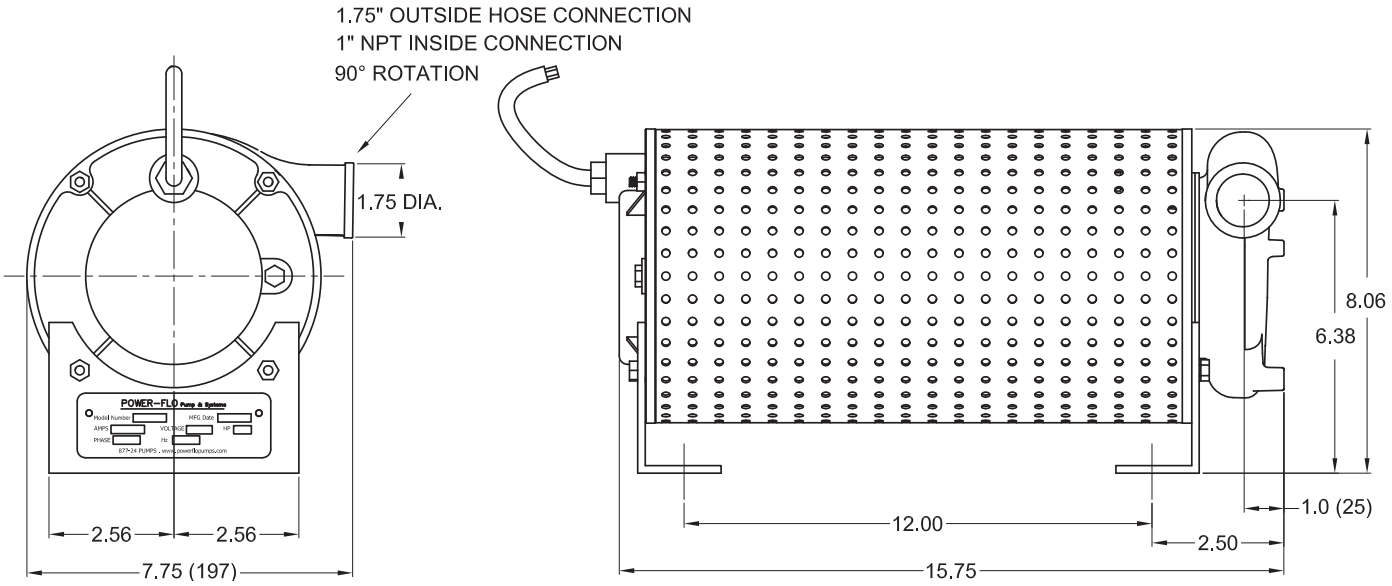

Performance

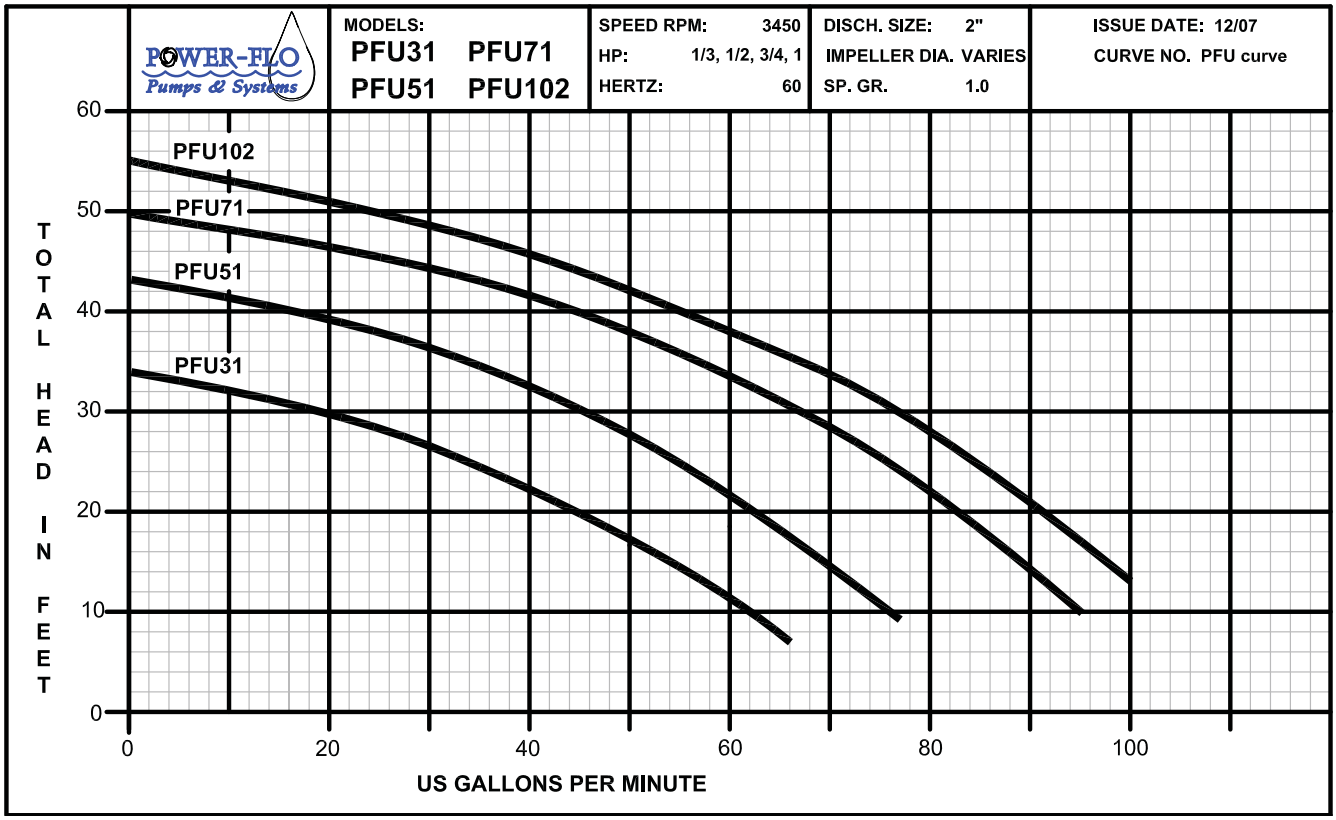

Specifications

DISCHARGE PFU152, 202	2" Outside Hose Connection, 1-1/4" NPT Inside Connection, 90° Rotation
LIQUID TEMPERATURE	145°F (63°C) Continuous
VOLUTE	Brass
INTERMEDIATE	Brass
HOUSING TUBE	304 Stainless Steel
HOUSING END PIECE	Brass
SCREEN	304 Stainless Steel
PUMP SUPPORTS	304 Stainless Steel
IMPELLER	1/3 & 1/2HP - Four Vane, Open, Brass 3/4 & 1 HP - Six Vane Open, Brass
SHAFT	416 Stainless Steel
O-RINGS	Buna-N
HARDWARE	300 Series Stainless Steel
SEAL	Single Mechanical, Carbon/Ceramic/Buna-N
POWER CORD	12 Ft.
MOTOR END BEARING	Single Row, Ball, Oil Lubricated
PUMP END BEARING	Single Row, Ball, Oil Lubricated
MOTOR	Oil Filled, Squirrel Cage Induction, NEMA B Design, Class H Insulation
SINGLE PHASE	Permanent Split Capacitor (PSC), Includes Overload Protection in Motor; Trip Off Temp. 248°F (120°C)

The design of the suction chamber keeps motor 2/3 submerged at all times for cool operation.

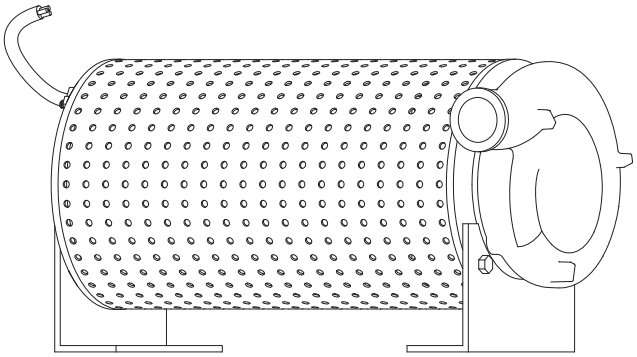

Vacuum Pressure Impregnation "VPI" Sealed Insulation System

VPI motor enhancement system was developed to greatly extend the winding life expectancy of an electric motor. The motor stator is loaded into a pressure vessel and immersed in the specialty selected varnish. All gas pockets located within the stator are evacuated under vacuum. The varnish is drawn into the stator core, completely occupying all voids in the winding. Following a series of processes, ending in a controlled bake, the winding is 100% impregnated and sealed.

VPI is greatly superior to the "dip and bake" method which may provide only 50% to 70% of effective insulation leaving voids and air pockets. VPI provides 100% solid mass structure which provides the greatest mechanical strength and a cooler running motor due to superior heat dissipation.

MODEL	HP	Hz	Volts/ Ph	RPM	Full Load Amps	Locked Rotor Amps	Winding Resistance MAIN -- START	NEMA Start Code	Cord Type	Cord Size	Cord O.D.
PFU152	1-1/2	60	230/1	3450	8.5	19.8	2.9 -- 3.14	D	SOW	16/3	0.395
PFU202	2	60	230/1	3450	11.0	25.6	1.9 -- 2.32	D	SOW	16/3	0.395

Winding resistance ± 5% at terminal block. Rated operation at ± 10% voltage at motor

Dimensions

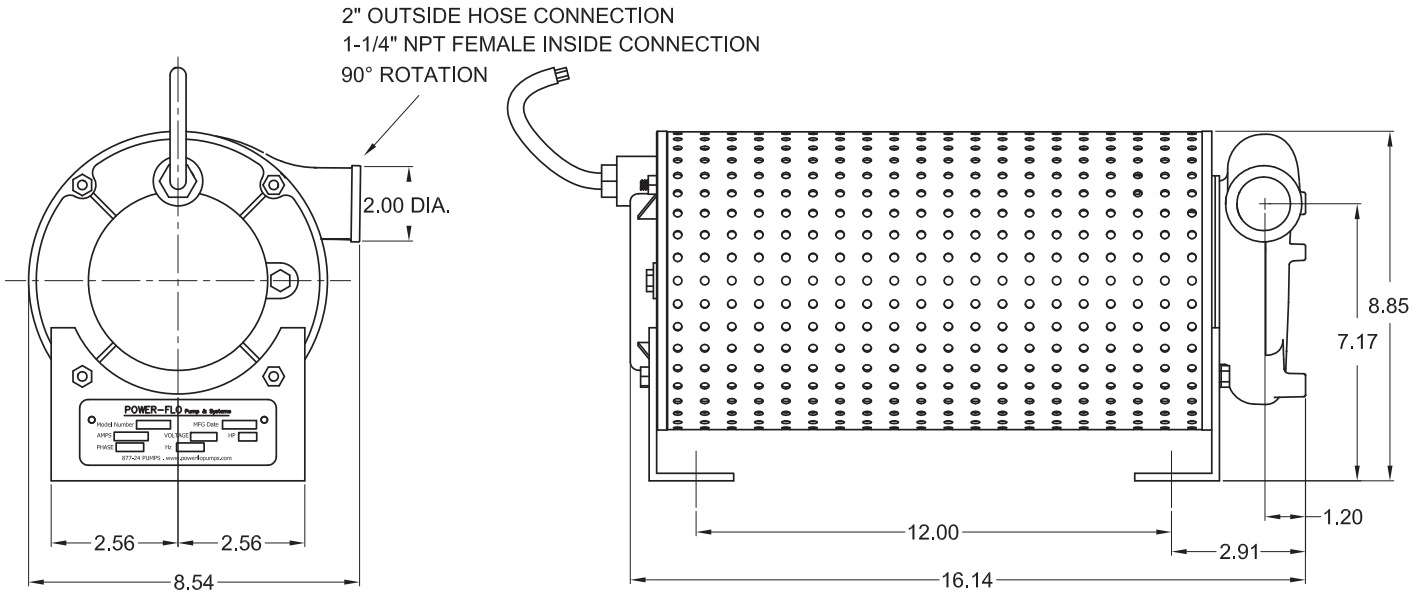

Performance

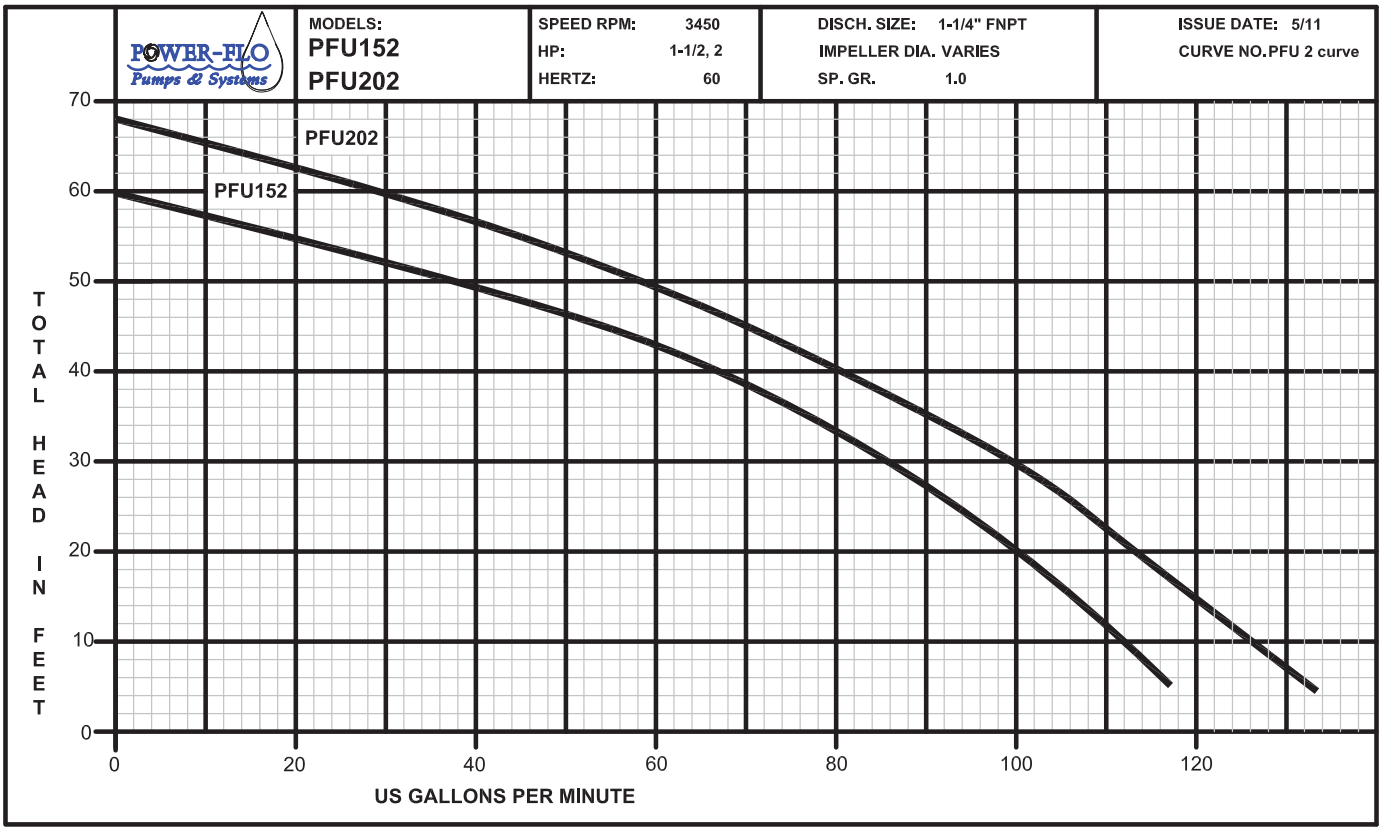

Receiving Inspection

Upon receiving the pump, it should be inspected for damage or shortages. If damage has occurred, file a claim immediately with the company that delivered the pump. If the manual is removed from the packaging, do not lose or misplace.

Storage

Any product that is stored for a period longer than six (6) months from the date of purchase should be bench tested prior to installation. A bench test consists of, checking the impeller to assure it is free turning and a run test to assure the motor (and switch if provided) operate properly. Do not pump out of liquid.

Location

The design of these pumps allow for use in decorative water displays. These pumps should be set in the bottom of a pit in the horizontal position to insure submergence at all times. In the horizontal position, the built-in suction trap will prevent the unit from pumping the pit dry, keeping the motor 2/3 submerded, providing adequate cooling.

Pump may be mounted in the vertical position, but could expose motor housing if water level is pumped down. This could cause the motor to overheat and trip the built-in automatic overload protector.

Discharge Piping

This is a high capacity low head pump. It is important to use as few pipe fittings as posible and of adequate size to hold pressure loss due to friction to a minimum. All models have 1-3/4 inch hose connection discharge and can be rotated in 90° increments.

WARNING ! - Disconnect power from pump before handling or servicing Injury, electrical shock or death could result. Pump MUST be grounded in accordance with the NEC or CEC and all state province, local codes and ordinances. This pump is NOT for use in swimming pools.

Electrical Connections

The PFU motor is an oil filled, single phase permanent split capacitor type with built in automatic overload protector and does not require a control box. Connect the white and black wires of the motor lead to the two line leads from the power source fused disconnect switch or breaker box. Connect the green wire to a ground. See table below for, cable sizes to reach from power souce to motor leads, and fuse sizes.

CORD & FUSE SIZES MAXIMUM CORD LENGTH IN FEET				
CORD SIZE	1/3HP 115V FUSE: 20 AMP	1/2HP 115V FUSE: 25 AMP	3/4HP 115V FUSE: 30 AMP	1HP 230V FUSE: 25 AMP
14 GA.	70	55	40	100
12 GA.	120	95	55	145
10 GA.	220	145	95	240

Power cable:
The power cable mounted to the pump must not be modified in any way except for shortening to a specific application. Any splice between the pump and the control panel must be made in accordance with the electric codes. It is recommended that a junction box, if used, be mounted outside the sump to prevent flooding. **DO NOT USE THE POWER CABLE TO LIFT PUMP.**

Overload Protection:
Single Phase - The stator in-winding overload protector used is referred to as an inherent overheating protector and operates on the combined effect of temperature and current. This means that the overload protector will trip out and shut the pump off if the windings become too hot, or the load current passing through them becomes too high.

IMPORTANT ! - The overload will then automatically reset and start the pump up after the motor cools to a safe temperature. In the event of an overload, the source of this condition should be determined and corrected immediately.

WARNING! - DO NOT LET THE PUMP CYCLE OR RUN IF AN OVERLOAD CONDITION OCCURS !

If current through the temperature sensor exceeds the values listed, an intermediate control circuit relay must be used to reduce the current or the sensor will not work properly.

TEMPERATURE SENSOR ELECTRICAL RATINGS		
Volts	Continuous Amperes	Inrush Amperes
110-120	3.00	30.0
220-240	1.50	15.0

Wire Size:
If longer power cable is required consult a qualified electrician for proper wire size.

Pre-Operation & Service

Pre-Operation

1. Check Voltage and Phase
   Compare the voltage and phase information stamped on the pump name plate.

2. **Check Pump Rotation** - Improper motor rotation can result in poor pump performance and can damage the motor and/or pump. Check rotation on three phase units by momentarily applying power and observe the "kickback". Kickback should always be in a counter-clockwise direction as viewed from motor end or opposite to impeller rotation. Incorrect rotation for Single-Phase pumps is unlikely. If the rotation is incorrect contact factory.

3. **Name Plate** - Record the information from the pump name plate to drawing in front of manual for future reference.

4. **Insulation Test** - An insulation (megger) test should be performed on the motor. Before the pump is put into service. The resistance values (ohms) as well as the voltage (volts) and current (amps) should be recorded.

Maintenance

No lubrication or maintenance is required. Perform the following checks when pump is removed from operation or when pump performance deteriorates:

a). Inspect motor chamber for oil level and contamination.
b). Inspect impeller and body for excessive build-up or clogging.
c). Inspect and clean screen if required.
d). Inspect seal for wear or leakage.

Servicing

NOTE: Item numbers in ( ) refer to Figures 3 & 4.

WARNING ! - Before any service work is done, disconnect and lock out electrical power to pump.

Cooling Oil - Anytime the pump is removed from operation, the cooling oil in the motor housing should be checked visually for oil level and contamination. To check oil, set unit upright. Remove pipe plug (32). With a flashlight, visually inspect the oil in the housing tube (27) to make sure it is clean and clear, light amber in color and free from suspended particles. Milky white oil indicates the presence of water. Oil level should be above all internal componentry.

Oil Testing

- Drain oil into a clean, dry container by placing pump on it's end, remove pipe plug (32), from housing tube (27).
- Check oil for contamination using an oil tester with a range to 30 Kilovolts breakdown.
- If oil is found to be clean and uncontaminated (measuring above 15 KV. breakdown), refill the housing.
- If oil is found to be dirty or contaminated (or measures below 15 KV. breakdown), the pump must be carefully inspected for leaks at the shaft seal (8), gland nut (17), o-rings (23), and pipe plug (32), before refilling with oil. To locate the leak, perform a pressure test.

After leak is repaired, dispose of old oil properly, and refill with new oil.

Oil Replacement - Set unit upright and (drain oil, if not already done), refill with new cooling oil as per table below.

An air space must remain in the top of the housing tube when pump is placed with volute end on bench, to compensate for oil expansion. Fill until capacitor is covered when viewing through fill plug hole. When refilling with oil after servicing the shaft seal (8), a pressure test should be preformed. If shaft seal (8) was not serviced, then apply pipe sealant and replace the pipe plug (32).

***DO NOT** overfill oil. Overfilling of housing with oil can create excessive and dangerous hydraulic pressure which can destroy the pump and create a hazard. Overfilling oil voids warranty.*

Cooling Oil Recommended Supplier/Grade	
BP	Enerpar SE100
Conoco	Pale Paraffin 22
Mobile	D.T.E. Oil Light
Shell Canada	Transformer-10
Texaco	Diala-Oil-AX

Pressure Test - Oil should be at normal level. Remove pipe plug (32) from housing end (19). Apply pipe sealant to pressure gauge assembly and tighten into hole. Pressurize housing to 6 P.S.I. Use soap solution around the sealed areas and inspect joints for "air bubbles". If, after five minutes, the pressure is still holding constant, and no "bubbles" /oil seepage is observed, slowly bleed the pressure and remove the gauge assembly. Replace pipe plug using sealant. The leek must be located and repaired if pressure does not hold.

Pressure builds up extremely fast, increase pressure by "TAPPING" air nozzle. Too much pressure will damage seal.
DO NOT exceed 6 P.S.I.

Disassembly & Assembly

Impeller and Volute:

Disconnect power. Disconnect discharge piping. Remove screen (14) by removing springs (33) and lifting off. Remove cap screws (29) and pull volute (1) and gasket from bearing sleeve (9). Remove set screw (3), unscrew counter-clockwise impeller (2) from motor shaft. Replace impeller if worn or pitted.

Reassemble by placing shims (5) on shaft, to ensure proper clearance between impeller (2) and bearing sleeve (9). The clearance should be approximately .03 inches. Screw impeller (2) clockwise onto shaft and place set screw (3) in place and tighten. Place gasket (30) and volute (1) onto bearing sleeve (9) and insert cap screws in place and tighten. Replace screen (14) with springs (33).

IMPORTANT:

For units Dated Jan. 2011 and newer, with Ball Bearing Design, continue on.

For unites prior to Jan. 2011 with sleeve design, see pages 11 through 14.

Motor & Shaft Seal:

Remove screen, volute and impeller as previously stated and drain oil from housing. Loosen gland nut (17) and slide it back on cord (18). Remove hex nuts (20) and lockwashers (21) from studs (28) and pull housing end (19) from housing tube (27). Disconnect cord set (18) and check for damage or cracks, replace if required. Remove grommet (15), friction rings (16) from housing end (19), replace if damaged. Pull housing tube (27) from bearing sleeve (9). Remove seal spacer (31) and v-ring (6) from shaft. Loosen motor screws and pull bearing sleeve (9) with shaft seal (8) from motor.

IMPORTANT that you mark location of overload in relation to bearing sleeve (9). Remove retaining ring (7) and press seal assembly (8) out of bearing sleeve. Replace complete seal if seal shows signs of uneven wear on seal faces, chips, or scratches. If replacing seal, remove stationary by prying out with flat screwdrive.

Examine o-rings (23) and replace if damaged. Check motor capacitor (12) with an Ohm meter by first grounding the capacitor by placing a screwdriver across both terminals and then removing screwdriver. Connect Ohm meter (set on high scale) to terminals. If needle moves to infinity (∞) then drifts back, the capacitor is good. If needle does not move or moves to infinity (∞) and does not drift back, replace capacitor (12). Inspect motor winding for shorts and check resistance values. Check rotor for wear. If rotor or the stator windings are defective, the complete motor must be replaced. To test the overload, check the continuity between the black and white wires.

IMPORTANT! - All parts must be clean before reassembly. Handle seal parts with extreme care. DO NOT damage lapped surfaces.

To reassemble, clean seal cavity in bearing sleeve (9) and oil. Lightly oil stationary member of seal, and with lapped surface facing motor, press stationary member with seal pusher tool into bearing sleeve (9).

Lightly oil **(Do not use grease)** inner surface of rotating member. With the lapped surface facing inward, place rotating member into bearing sleeve (9) until it seats against stationary member. Place the spring and retaining ring onto rotating member. Press bearing (39) into bearing sleeve (9) and snap ring (7) into bearing sleeve (9).

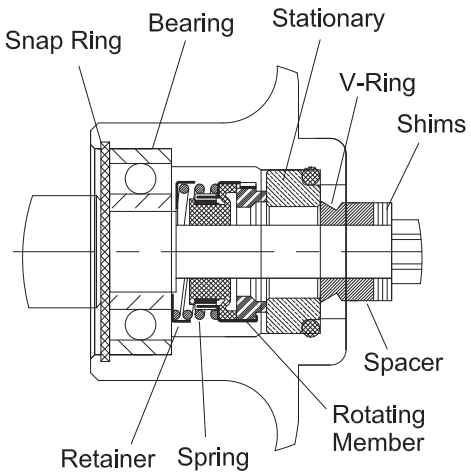

Figure 1

Lightly oil **(Do not use grease)** the shaft on motor (10). Assemble bearing sleeve (9) onto motor (10), being carfull not to damage seal. locate overload as noted (or at the 11 o'clock position as viewed from motor end), with the four motor bolts.

Place capacitor (12) into bracket (25) if removed and secure with screw. Connect flag terminal from motor and terminal boot (13) to capacitor (12).

Place one o-ring (23) into groove on bearing sleeve (9) being careful not to damage the o-ring. Slide housing tube (27) onto bearing sleeve (9). Place o-ring (23) into groove on housing end piece (19) and place end piece onto housing tube (27). Place pump support (22) onto lower studs (28) and lockwashers (21) and hex nuts (20) onto studs and tighten.

Place v-ring (6) and seal spacer (31) onto shaft until seated. Assemble sceen, volute and impeller as described.

Service

Power Cable Connection

Place gland nut (17), one friction ring (12), grommet (15) onto cord and slide cord through housing end piece (19). Make wire connections using terminal connectors (24). Place o-ring (23) into groove on housing end piece (19) and slide end piece onto housing tube (27) being careful not to damage o-ring. Place pump support (22) onto lower studs (28) and place lockwashers (21) and hex nuts (20) onto studs and tighten. Insert grommet and friction ring into housing end piece (19). Apply pipe sealant to gland nut (17), screw into end piece and torque gland nut to 17.5 ft. lbs to prevent water leakage.

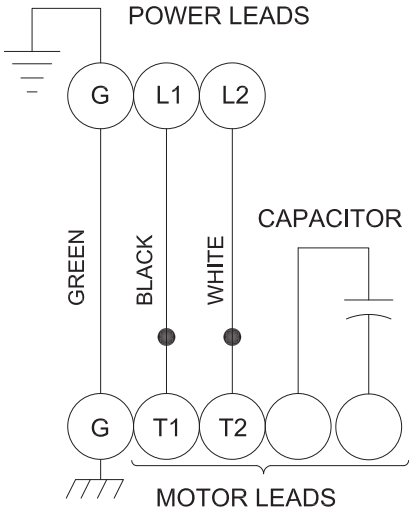

Figure 2 - 115 & 230 Volt, 1Ph	
POWER CABLE	**MOTOR LEAD**
Green (Ground)	Green
T1 - Black	Straight Connector
T2 - White	Straight Connector
Capacitor	Flag Connector
Capacitor	Flag Connector

Repair Parts - Bearing Design

For Repair Part Please supply: Model Number and MFG Date as shown on Name Plate, and Part Description and Part Number as shown on Parts List.

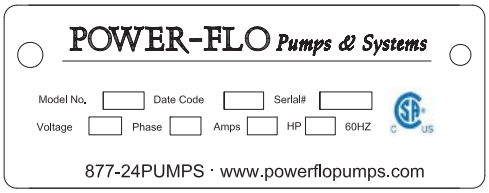

For Units from Jan. 2011

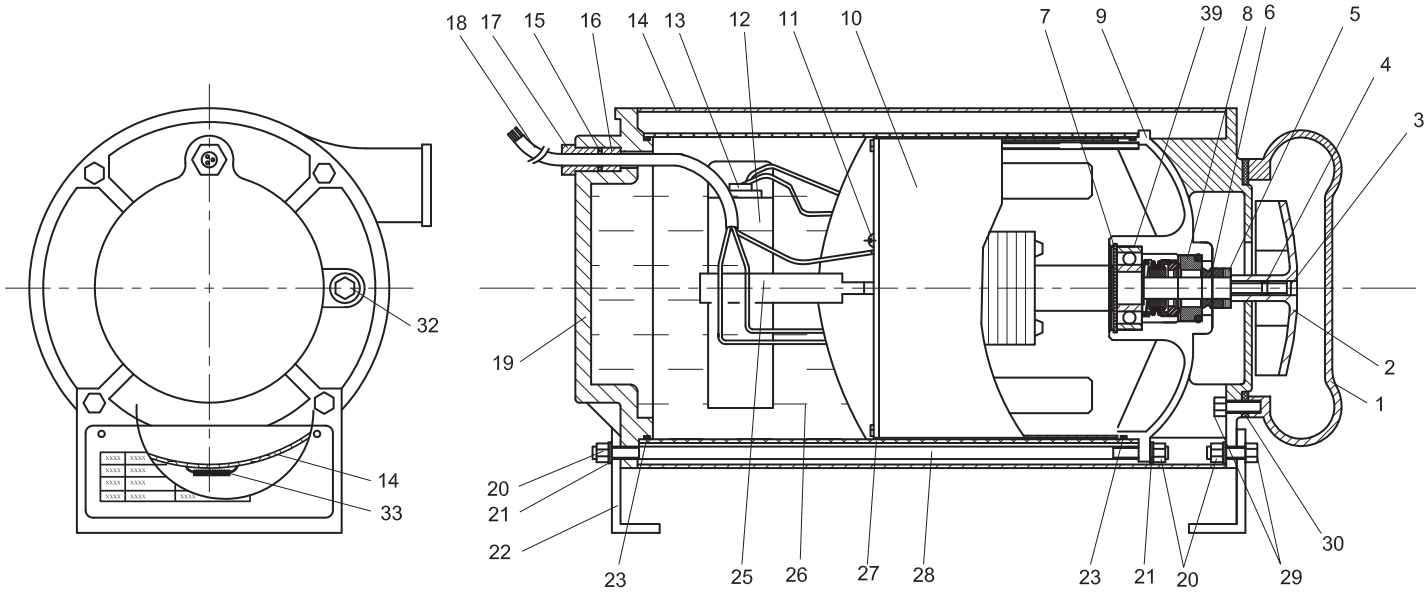

Figure 3

For Repair Part Please supply: Model Number and MFG Date as shown on Name Plate, and Part Description and Part Number as shown on Parts List.

Repair Parts - Bearing Design

For Units from Jan. 2011

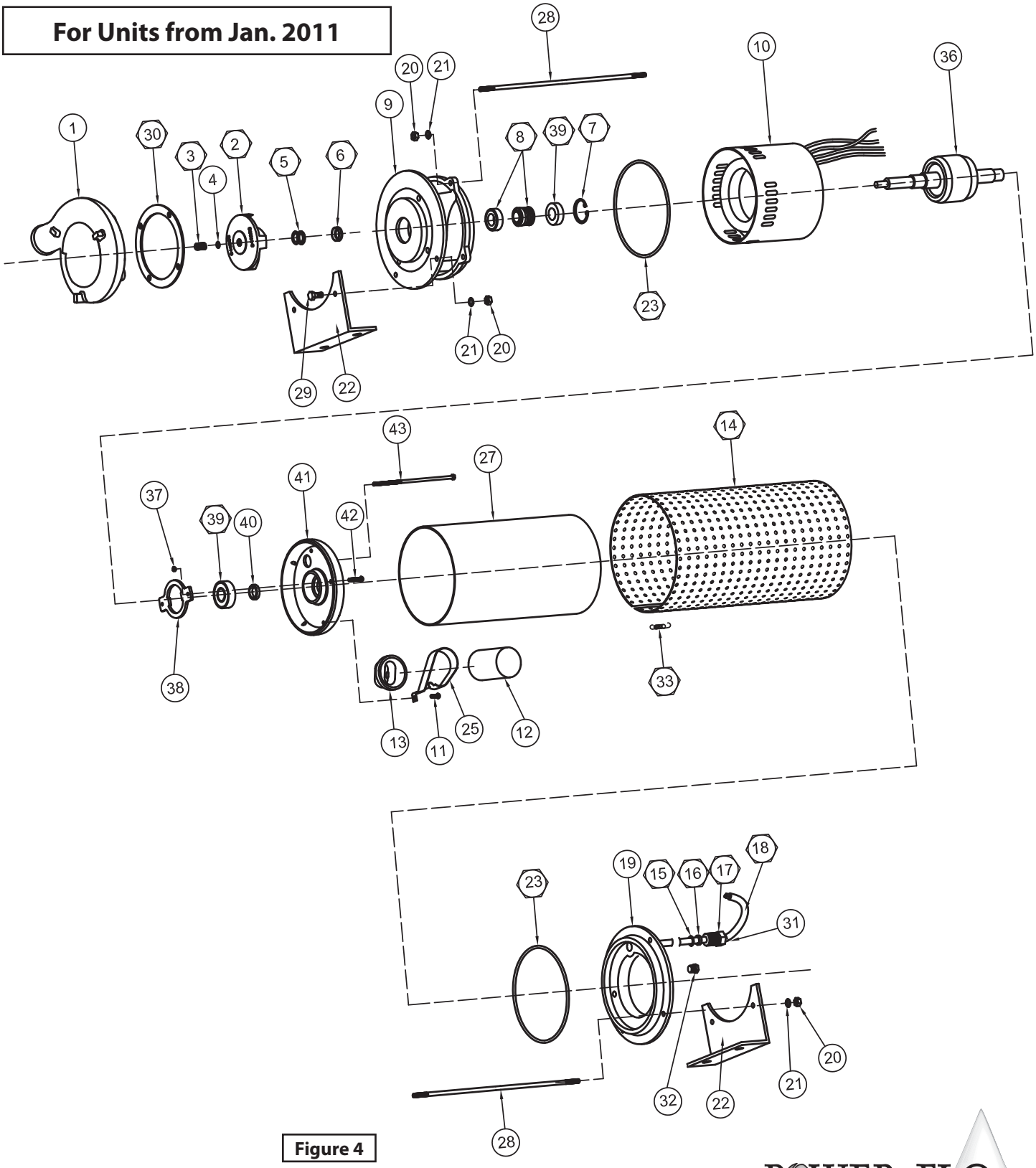

Figure 4

Parts List - Bearing Design

For Repair Part Please supply: Model Number and MFG Date as shown on Name Plate, and Part Description and Part Number as shown on Parts List.

Ref. No.	Qty		Name	Part Numbers			
				PFU31	PFU51	PFU71	PFU102
1	1		Volute, Bronze	PF093277	PF093277	PF093277	PF093277
2	1	☆	Impeller, Bronze	PF024331	PF024332	PF024333	PF024334
3	1	♦	Slotted set screw 7/16-20, Stainless	PF026155	PF026155	PF026155	PF026155
4	1		Lockwasher, 7/16 Stainless	♦	♦	♦	♦
5	6	♦	Shims, impeller, Stainless	PF024336	PF024336	PF024336	PF024336
6	1	♦	V-ring, Buna-N	PF068053	PF068053	PF068053	PF068053
7	1	♦	Retaining ring	PF023702	PF023702	PF023702	PF023702
8	1	♦	Shaft Seal, C/C/B, Type 21, 5/8"	PF068988	PF068988	PF068988	PF068988
9	1	*	Bearing sleeve, Bronze	PF093279B	PF093279B	PF093279B	PF093279B
10	1	☆	Motor (see note)	PF023254	PF023255	PF024308	PF023257
11	1		Self Tapping Screw, 8-32 x .31" Lg	♦	♦	♦	♦
12	1	☆	Capacitor 20mfd 370V	PF070963	PF070963	----	----
			Capacitor, 25mfd 370V	----	----	PF070965	PF070965
13	1		Terminal Boot, Buna-N	PF034322	PF034322	PF034322	PF034322
14	1	☆	Screen, Stainless	PF023699	PF023699	PF023699	PF023699
15	1		Grommet, Bronze	PF014896	PF014896	PF014896	PF014896
16	2		Friction ring, Plastic	PF085673	PF085673	PF085673	PF085673
17	1		Gland nut, Stainless	PF026857	PF026857	PF026857	PF026857
18	1	☆	Cord set, (includes 15, 16, 17 & 18)	PF086039	PF086039	PF086039	PF086039A
19	1		Housing end, Bronze	PF026850	PF026850	PF026850	PF026850
20	10		Hex nut 1/4-20, Stainless	♦	♦	♦	♦
21	10		Lockwasher 1/4"	♦	♦	♦	♦
22	2		Pump support	PF023316	PF023316	PF023316	PF023316
23	2	♦	O-ring, Buna-N	PF016068	PF016068	PF016068	PF016068
24	2		Terminal Connector, Plastic	PF079318	PF079318	PF079318	PF079318
25	1		Capacitor bracket, Steel	PF039858	PF039858	PF039858	PF039858
26	83.5 oz		Cooling Oil - PFU31, 1/3HP	Refer to Chart, Souce Locally			
	83.5 oz		Cooling Oil - PFU51, 1/2HP				
	79.5 oz		Cooling Oil - PFU71, 3/4HP				
	67.5 oz		Cooling Oil - PFU102, 1HP				
27	1		Housing tube, Bronze	PF088356	PF088356	PF088356	PF088356
28	4		Studs, 1/4-20 x 11.812" Lg, Stainless	PF023695	PF023695	PF023695	PF023695
29	10		Hex Hd Screws 1/4-20 x .625" Lg, SS	♦	♦	♦	♦
30	1	♦	Gasket, Casing, Buna-N	PF024335	PF024335	PF024335	PF024335
32	1		Pipe Plug 1/8" NPT, Stainless	♦	♦	♦	♦
33	4	♦	Screen Spring	PF023501	PF023501	PF023501	PF023501
39	2	♦*	Bearing, #6203	PF17414	PF17414	PF17414	PF17414
OVERHAUL KIT							
♦	Includes: Items 3, 5, 6, 7, 8, 23, 30, 33, 39			PFU-OHK			

Note: Item 10 Motor includes 10 & 39, (36, 37, 38, 40, 41, 42 & 43 shown on drawing but not listed)

(*) - Design change Jan. 2011 - Removed bushing #35 and replaced with an additional bearing #39, also changed item #9.

♦ = Aquire standard hardware locally.
♦ = Overhaul Kit
☆ = Supplied as individual items

For Repair Part Please supply: Model Number and MFG Date as shown on Name Plate, and Part Description and Part Number as shown on Parts List.

Parts List - Bearing Design

Ref. No.	Qty		Name	Part Numbers	
				PFU152	PFU202
1	1		Volute, Bronze	PF65PFU1501	PF65PFU1501
2	1	☆	Impeller, Bronze	PF65PFU1505	PF65PFU1504
3	1	♦	Slotted set screw 7/16-20, Stainless	PF026155	PF026155
4	1		Lockwasher, 7/16 Stainless	♦	♦
5	6	♦	Shims, impeller, Stainless	PF441219021	PF441219021
6	1	♦	V-ring, Buna-N	PF068053	PF068053
7	1	♦	Retaining ring	PF023702	PF023702
8	1	♦	Shaft Seal, C/C/B, Type 21, 5/8"	PF068988	PF068988
9	1		Bearing sleeve, Bronze	PF65PFU1503	PF65PFU1503
10	1	☆	Motor (see note)	PF080150C07	PF08200C07
11	1		Self Tapping Screw, 8-32 x .31" Lg	♦	♦
12	1	☆	Capacitor 45mfd 370V	PF522045720	PF522045720
13	1		Terminal Boot, Buna-N	PF034322	PF034322
14	1	☆	Screen, Stainless	PF61PFU1502	PF61PFU1502
15	1		Grommet, Bronze	PF014896	PF014896
16	2		Friction ring, Plastic	PF085673	PF085673
17	1		Gland nut, Stainless	PF026857	PF026857
18	1	☆	Cord set, (includes 15, 16, 17 & 18)	PF086039A	PF086039A
19	1		Housing end, Bronze	PF65PFU1502	PF65PFU1502
20	10		Hex nut 1/4-20, Stainless	♦	♦
21	10		Lockwasher 1/4"	♦	♦
22	2		Pump support	PF61PFU1503	PF61PFU1503
23	2	♦	O-ring, Buna-N, 156 ID x 3.5mm	PF63PFU1501	PF63PFU1501
24	2		Terminal Connector, Plastic	PF079318	PF079318
25	1		Capacitor bracket, Steel	PF039858	PF039858
26	83.5 oz		Cooling Oil - PFU152, 1-1/2HP	Refer to Chart, Souce Locally	
	79.5 oz		Cooling Oil - PFU202, 2HP		
27	1		Housing tube, Bronze	PF61PFU1501	PF61PFU1501
28	4		Studs, 1/4-20 x 11.812" Lg, Stainless	PF023695	PF023695
29	10		Hex Hd Screws 1/4-20 x .625" Lg, SS	♦	♦
30	1	♦	Gasket, Casing, Buna-N	PF024335	PF024335
31	1		Sleeve, cord	PF63PFS1008	PF63PFS1008
32	1		Pipe Plug 1/8" NPT, Stainless	♦	♦
33	4	♦	Screen Spring	PF023501	PF023501
39	2	♦*	Bearing, #6203Z	PF62B6203Z1	PF62B6203Z1
OVERHAUL KIT					
♦	Includes: Items 3, 5, 6, 7, 8, 23, 30, 33, 39			PFU2-OHK	

Note: Item 10 Motor includes 10 & 39, (36, 37, 38, 40, 41, 42 & 43 shown on drawing but not listed)

♦ = Aquire standard hardware locally.
♦ = Overhaul Kit
☆ = Supplied as individual items

Repair Parts - Sleeve Design

For Repair Part Please supply: Model Number and MFG Date as shown on Name Plate, and Part Description and Part Number as shown on Parts List.

For Units previous to Jan. 2011

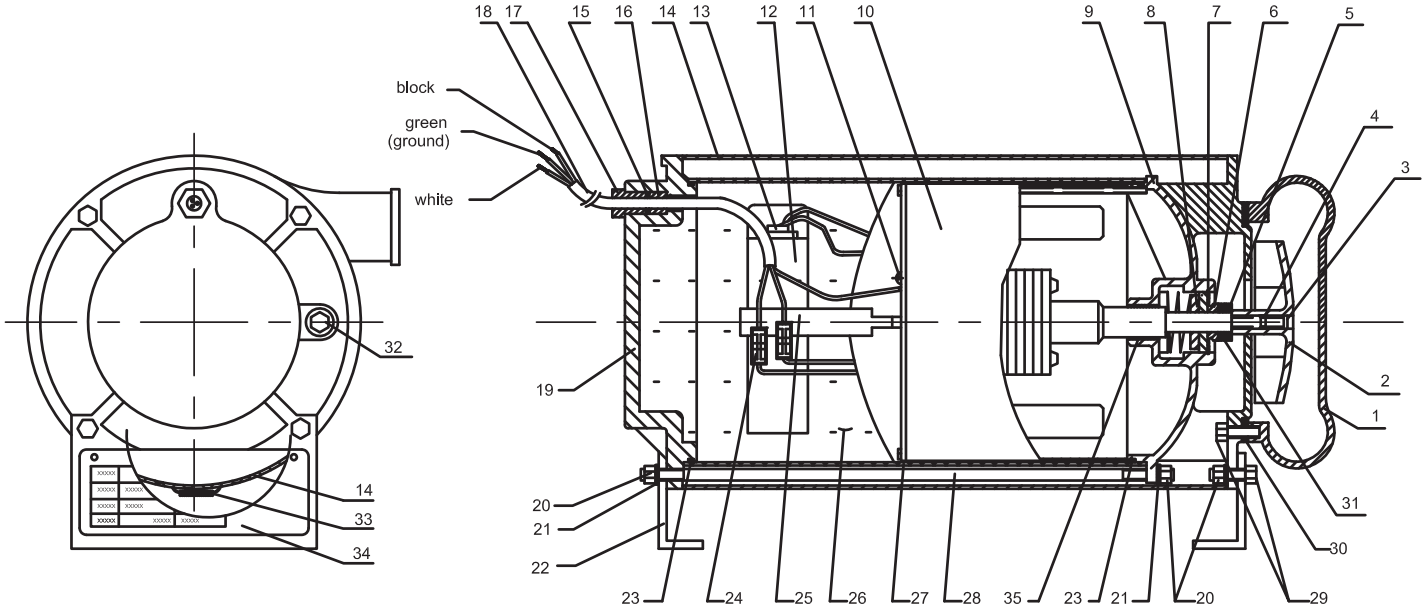

For Units previous to Jan. 2011

Service - Sleeve Design

Motor & Shaft Seal:
Remove screen, volute and impeller as previously stated and drain oil from housing. Loosen gland nut (17) and slide it back on cord (18). Remove hex nuts (20) and lockwashers (21) from studs (28) and pull housing end (19) from housing tube (27). Disconnect cord set (18) and check for damage or cracks, replace if required. Remove grommet (15), friction rings (16) from housing end (19), replace if damaged. Pull housing tube (27) from bearing sleeve (9). Remove seal spacer (31) and v-ring (6) from shaft. Loosen motor screws and pull bearing sleeve (9) with shaft seal (8) from motor.

IMPORTANT that you mark location of overload in relation to bearing sleeve (9).

Remove retaining ring (7) and press seal assembly (8) out of bearing sleeve. Replace complete seal if seal shows signs of uneven wear on seal faces, chips, or scratches. If replacing seal, remove stationary by prying out with flat screwdrive.

Examine o-rings (23) and replace if damaged. Check motor capacitor (12) with an Ohm meter by first grounding the capacitor by placing a screwdriver across both terminals and then removing screwdriver. Connect Ohm meter (set on high scale) to terminals. If needle moves to infinity (∞) then drifts back, the capacitor is good. If needle does not move or moves to infinity (∞) and does not drift back, replace capacitor (12).

Inspect motor winding for shorts and check resistance values. Check rotor for wear. If rotor or the stator windings are defective, the complete motor must be replaced. To test the overload, check the continuity between the black and white wires.

Assemble bearing sleeve (9) onto motor (10), locating overload as noted (or at the 11 o'clock position as viewed from motor end), with the four motor bolts. Place capacitor (12) into bracket (25) if removed and secure with screws, Connect flag terminal from motor and terminal boot (13) to capacitor (12).

Place one o-ring (23) into groove on bearing sleeve (9) being careful not to damage the o-ring. Slide housing tube (27) onto bearing sleeve (9). Place o-ring (23) into groove on housing end piece (19) and place end piece onto housing tube (27). Place pump support (22) onto lower studs (28) and lockwashers (21) and hex nuts (20) onto studs and tighten.

IMPORTANT! - All parts must be clean before reassembly. Handle seal parts with extreme care. DO NOT damage lapped surfaces.

To reassemble, clean seal cavity in bearing sleeve (9) and oil. Insert seal (8) retaining ring along with spring onto motor shaft until seated.

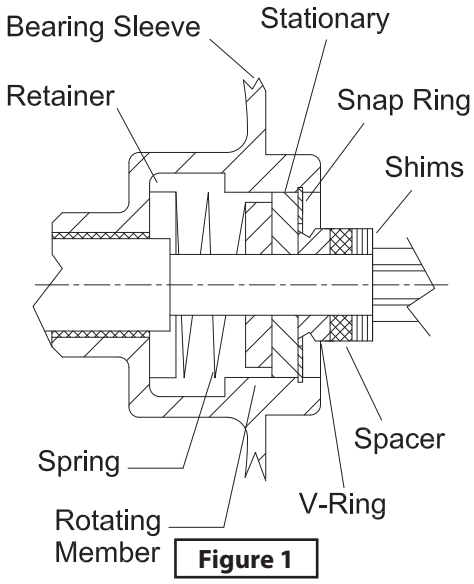

Figure 1

Lightly oil **(Do not use grease)** shaft and inner surface of rotating member and assembly tool bullet. Place the bullet tool over shaft threads and with lapped surface facing out, press rotating member with seal pusher tool onto shaft and into bearing sleeve (9) until it seats against shoulder of shaft.

Lightly oil **(Do not use grease)** stationary member of seal, and with lapped surface facing motor, press stationary member with seal pusher tool into bearing sleeve (9) until it seats against rotating member. Replace retaining ring (7), place v-ring (6) and seal spacer (31) onto shaft until seated. Assemble sceen, volute and impeller as described.

Repair Parts - Sleeve Design

For Repair Part Please supply: Model Number and MFG Date as shown on Name Plate, and Part Description and Part Number as shown on Parts List.

For Units previous to Jan. 2011

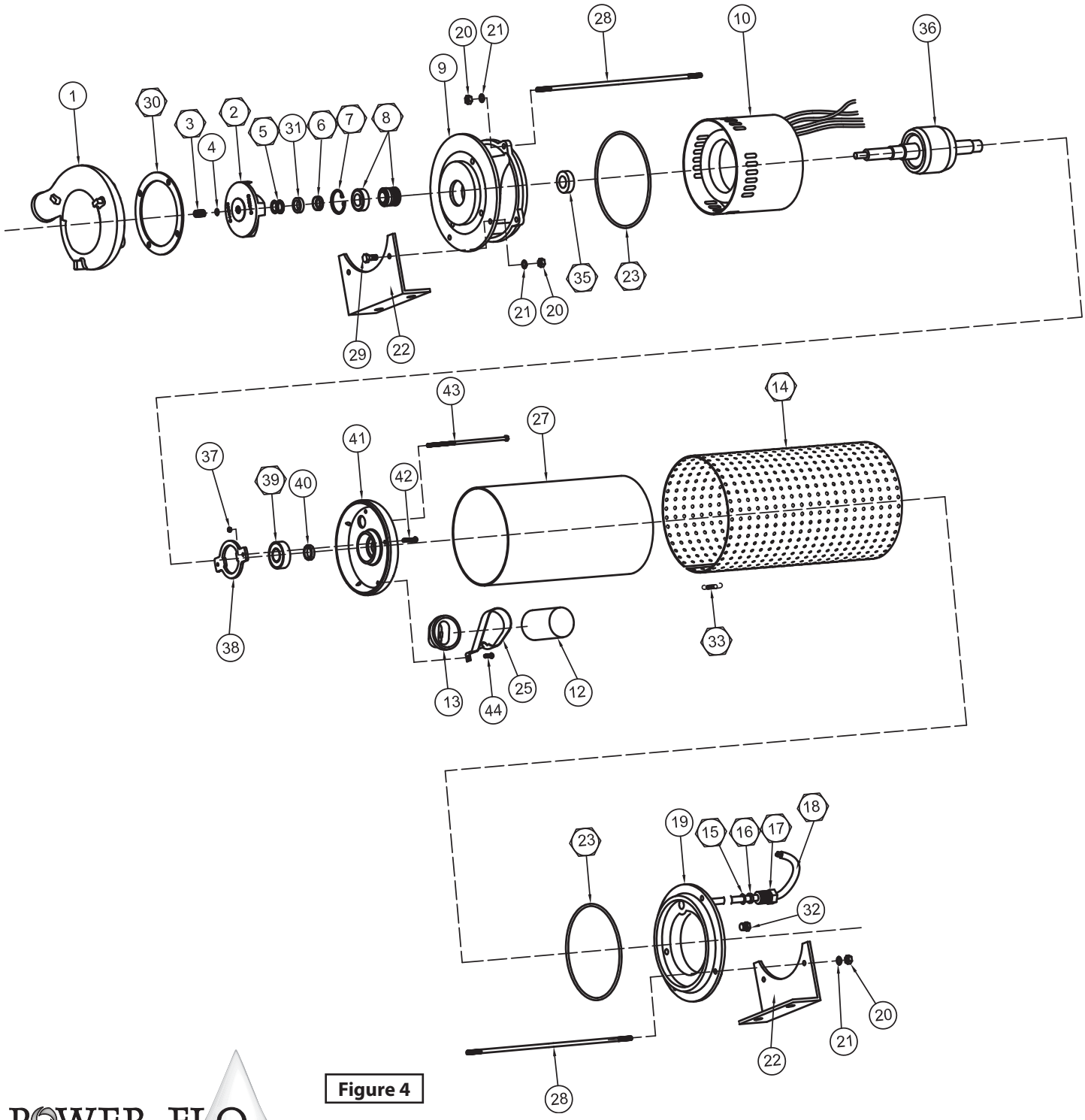

Figure 4

For Repair Part Please supply: Model Number and MFG Date as shown on Name Plate, and Part Description and Part Number as shown on Parts List.

Parts List - Sleeve Design

Ref. No.	Qty		Name	Part Numbers			
				PFU31	PFU51	PFU71	PFU102
1	1		Volute, Bronze	PF093277	PF093277	PF093277	PF093277
2	1	☆	Impeller, Bronze	PF024331	PF024332	PF024333	PF024334
3	1	♦	Slotted set screw 7/16-20, Stainless	PF026155	PF026155	PF026155	PF026155
4	1		Lockwasher, 7/16 Stainless	♦	♦	♦	♦
5	6	♦	Shims, impeller, Stainless	PF024336	PF024336	PF024336	PF024336
6	1	♦	V-ring, Buna-N	PF068053	PF068053	PF068053	PF068053
7	1	♦	Retaining ring	PF023702	PF023702	PF023702	PF023702
8	1	♦	Shaft Seal, C/C/B	PF068988	PF068988	PF068988	PF068988
9	1		Bearing sleeve, Bronze	PF093279	PF093279	PF093279	PF093279
10	1	☆	Motor (see note)	PF023254	PF023255	PF024308	PF023257
11	1		Self Tapping Screw, 8-32 x .31" Lg	♦	♦	♦	♦
12	1	☆	Capacitor 20mfd 370V	PF070963	PF070963	----	----
			Capacitor, 25mfd 370V	----	----	PF070965	PF070965
13	1		Terminal Boot, Buna-N	PF034322	PF034322	PF034322	PF034322
14	1	☆	Screen, Stainless	PF023699	PF023699	PF023699	PF023699
15	1		Grommet, Bronze	PF014896	PF014896	PF014896	PF014896
16	2		Friction ring, Plastic	PF085673	PF085673	PF085673	PF085673
17	1		Gland nut, Stainless	PF026857	PF026857	PF026857	PF026857
18	1	☆	Cord set, (includes 15, 16, 17 & 18)	PF086039	PF086039	PF086039	PF086039A
19	1		Housing end, Bronze	PF026850	PF026850	PF026850	PF026850
20	10		Hex nut 1/4-20, Stainless	♦	♦	♦	♦
21	10		Lockwasher 1/4"	♦	♦	♦	♦
22	2		Pump support	PF023316	PF023316	PF023316	PF023316
23	2	♦	O-ring, Buna-N	PF016068	PF016068	PF016068	PF016068
24	2		Terminal Connector, Plastic	PF079318	PF079318	PF079318	PF079318
25	1		Capacitor bracket, Steel	PF039858	PF039858	PF039858	PF039858
26	83.5 oz		Cooling Oil - PFU31, 1/3HP	Refer to Chart, Souce Locally			
	83.5 oz		Cooling Oil - PFU51, 1/2HP				
	79.5 oz		Cooling Oil - PFU71, 3/4HP				
	67.5 oz		Cooling Oil - PFU102, 1HP				
27	1		Housing tube, Bronze	PF088356	PF088356	PF088356	PF088356
28	4		Studs, 1/4-20 x 11.812" Lg, Stainless	PF023695	PF023695	PF023695	PF023695
29	10		Hex Hd Screws 1/4-20 x .625" Lg, SS	♦	♦	♦	♦
30	1	♦	Gasket, Casing, Buna-N	PF024335	PF024335	PF024335	PF024335
31	1		Seal spacer, Buna-N	PF025756	PF025756	PF025756	PF025756
32	1		Pipe Plug 1/8" NPT, Stainless	♦	♦	♦	♦
33	4	♦	Screen Spring	PF023501	PF023501	PF023501	PF023501
35	1		Brass Bushing	PF65PFUIN01	PF65PFUIN01	PF65PFUIN01	PF65PFUIN01
39	1	♦	Bearing, #6203	PF17414	PF17414	PF17414	PF17414
OVERHAUL KIT							
♦	Includes: Items 3, 5, 6, 7, 8, 12, 23, 30, 33, 35, 39			PFU-OHK			

Note: Item 10 Motor includes 10, 36, 37, 38, 39, 40, 41, 42 & 43

♦ = Aquire standard hardware locally.
♦ = Overhaul Kit
☆ = Supplied as individual items

For Units previous to Jan. 2011

POWER-FLO Pumps & Systems

Trouble Shooting Chart

Risk of electric shock. Always disconnect the pump from the power source before handling inspections or repairs.

Symptom	Possible Cause(s)	Corrective Action
Pump will not run or pump fluid	1. Poor electrical connection, blown fuse, tripped breaker or other interruption of power; improper power supply 2. Defective motor 3. Insufficient liquid level 13. Debris plugging screen and suction intake	1. Check all electrical connections for security. Have electrician measure current in motor leads, if current is within ± 20% of locked rotor Amps, impeller is probably locked. If current is 0, overload may be tripped. Remove power, allow pump to cool, then re-check current. 2. Check winding insulation (Megger Test) and winding resistance. If check is outside of range, dry and re-check. If still defective, replace per service instructions. 3. Make sure liquid level is above the pump 4. Re-check all sizing calculations to determine proper pump size. 5. Check discharge line for restrictions, including ice if line passes through or into cold areas. 6. Remove and examine check valve for proper installation and freedom of operation 7. Open valve 8. Check impeller for freedom of operation, security and condition. Clean impeller cavity and inlet of any obstruction 9. Loosen union slightly to allow trapped air to escape. 10. Repair fixtures as required to eliminate leakage 11. Check pump temperature limits and fluid temperature 12. Replace portion of discharge pipe with flexible connector or tighten existing piping. 13. Check screen and/or suction inlet.
Pump hums but doesn't run	1. Incorrect low voltage 8. Impeller jammed or loose on shaft, or inlet plugged	
Pump delivers insufficient capacity	1. Incorrect low voltage 4. Ecessive inflow or pump not properly sized for application 5. Discharge restricted 6. Check valve partially closed or installed backwards 7. Shut-off valve closed 8. Impeller jammed or loose on shaft, or inlet plugged 9. Pump may be air locked causing pump not to flow 10. Piping fixtures leaking or discharge before the nozzle 13. Suction restricted	
Pump shuts off and turns on independent of switch, (trips thermal overload protector). **CAUTION!** Pump may start unexpectedly. Disconnect power supply.	1. Incorrect low voltage 4. Ecessive inflow or pump not properly sized for application 8. Impeller jammed or loose on shaft, or inlet plugged 11. Excessive water temperature	
Pump operates noisily or vibrates excessively	2. Worn bearings, motor shaft bent 8. Debris in impeller cavity or broken impeller 12. Piping attachments to building structure too loose or rigid	

NOTE: Power-Flo Pumps & Systems assumes no responsibility for damage or injury due to disassembly in the field. Disassembly of the pumps or supplied accessories other than at Power-Flo Pumps & Systems or its authorized service centers, automatically voids warranty.

Notes:

LIMITED WARRANTY

Manufacturer warrants, to the immediate purchaser and subsequent initial owner during the warranty period, every new pump to be free from defects in material and workmanship under normal use and service, when properly used and maintained, for a period of eighteen (18) months from date of manufacture or twelve (12) months from date of installation (which ever comes first). Failure due to wear due to excessive abrasives is not covered. The initial owner is the purchaser who first uses the pump after its initial installation, or for non-permanent installation, the first owner who uses the pump. The date of installation shall be determined by a dated sales receipt noting the model and serial number of the pump. The dated sales receipt must accompany the returned pump. Product will be repaired, replaced or remanufactured at Manufacturer's option. No allowance will be made for shipping charges, damages, labor or other charges that may occur due to product failure, repair or replacement. This warranty does not apply to and there shall be no warranty for any material or product that has been disassembled without prior approval of Manufacturer, subjected to misuse, misapplication, neglect, alteration, accident or act of God; that has not been installed, operated or maintained in accordance with Manufacturer's installation instructions; that has been exposed to outside substances including but not limited to the following: sand, gravel, cement, mud, tar, hydrocarbons, hydrocarbon derivatives (oil, gasoline, solvents, etc.), or other abrasive or corrosive substances, wash towels or feminine sanitary products, etc. in all pumping applications. The warranty set out in the paragraph above is in lieu of all other warranties expressed or implied; and we do not authorize any representative or other person to assume for us any other liability in connection with our products. Contact Manufacturer at: 1-877-24PUMPS or www.powerflopumps.com, Attention: Customer Service Department, to obtain any needed repair or replacement of part(s) or additional information pertaining to our warranty.

MANUFACTURER EXPRESSLY DISCLAIMS LIABILITY FOR SPECIAL, CONSEQUENTIAL OR INCIDENTAL DAMAGES OR BREACH OF EXPRESSED OR IMPLIED WARRANTY; AND ANY IMPLIED WARRANTY OF FITNESS FOR A PARTICULAR PURPOSE AND OF MERCHANTABILITY SHALL BE LIMITED TO THE DURATION OF THE EXPRESSED WARRANTY.

Some states do not allow limitations on the duration of an implied warranty, so the above limitation may not apply to you. Some states do not allow the exclusion or limitation of incidental or consequential damages, so the above limitation or exclusion may not apply to you. This warranty gives you specific legal rights and you may also have other rights which vary from state to state.

Series: PFU

Submersible Fountain Pumps
1-3/4" Hose Connection, 1/3, 1/2, 3/4 & 1HP

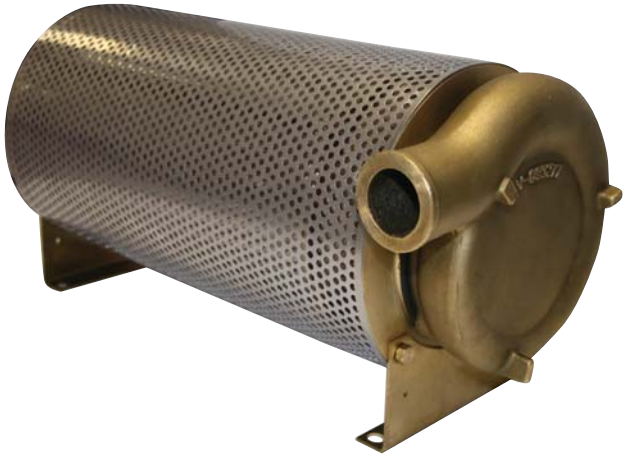

DISCHARGE	1-3/4" Hose Connection, 90° Rotation and 1" NPT Female
LIQUID TEMPERATURE	145°F (63°C) Continuous
VOLUTE	Brass
INTERMEDIATE	Brass
HOUSING TUBE	304 Stainless Steel
HOUSING END PIECE	Brass
SCREEN	304 Stainless Steel
PUMP SUPPORTS	304 Stainless Steel
IMPELLER	1/3 & 1/2HP - Four Vane, Open, Brass 3/4 & 1 HP - Six Vane Open, Brass
SHAFT	416 Stainless Steel
O-RINGS	Buna-N
HARDWARE	300 Series Stainless Steel
SEAL	Single Mechanical, Carbon/Ceramic/Buna-N
POWER CORD	12 Ft.
MOTOR END BEARING	Single Row, Ball, Oil Lubricated
PUMP END BEARING	Single Row, Ball, Oil Lubricated
MOTOR	Oil Filled, Squirrel Cage Induction, NEMA B Design, Class H Insulation
SINGLE PHASE	Permanent Split Capacitor (PSC), Includes Overload Protection in Motor

Series: PFU31 • PFU51, PFU71 • PFU102

1/3, 1/2, 3/4 & 1HP
3450 RPM • 60 Hz
Submersible Fountain Pumps

Description
For use in Decorative Water Displays

Vacuum Pressure Impregnation "VPI" Sealed Insulation System
VPI motor enhancement system was developed to greatly extend the winding life expectancy of an electric motor. The motor stator is loaded into a pressure vessel and immersed in the specialty selected varnish. All gas pockets located within the stator are evacuated under vacuum. The varnish is drawn into the stator core, completely occupying all voids in the winding. Following a series of processes, ending in a controlled bake, the winding is 100% impregnated and sealed.

VPI is greatly superior to the "dip and bake" method which may provide only 50% to 70% of effective insulation leaving voids and air pockets.
VPI provides 100% solid mass structure which provides the greatest mechanical strength and a cooler running motor due to superior heat dissipation.

Series: PFU

Submersible Fountain Pumps
1-3/4" Hose Connection, 1/3, 1/2, 3/4 & 1HP

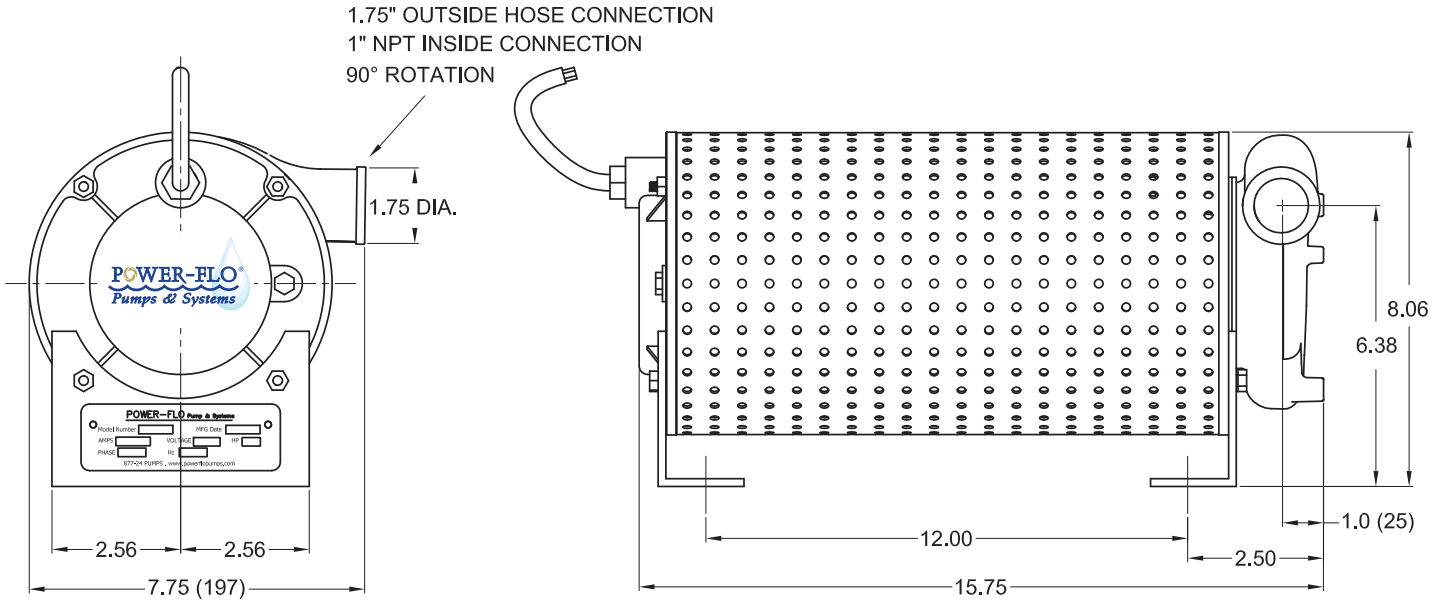

MODEL	HP	Hz	Volts/Ph	RPM	Full Load Amps	Locked Rotor Amps	NEMA Start Code	Cord Type	Cord Size	Cord O.D.
PFU31	1/3	60	115/1	3450	8.0	21.0	J	SOW	16/3	0.395
PFU51	1/2	60	115/1	3450	9.5	21.0	E	SOW	16/3	0.395
PFU71	3/4	60	115/1	3450	12.0	28.0	D	SOW	16/3	0.395
PFU102	1	60	230/1	3450	7.0	21.0	E	SOW	16/3	0.395

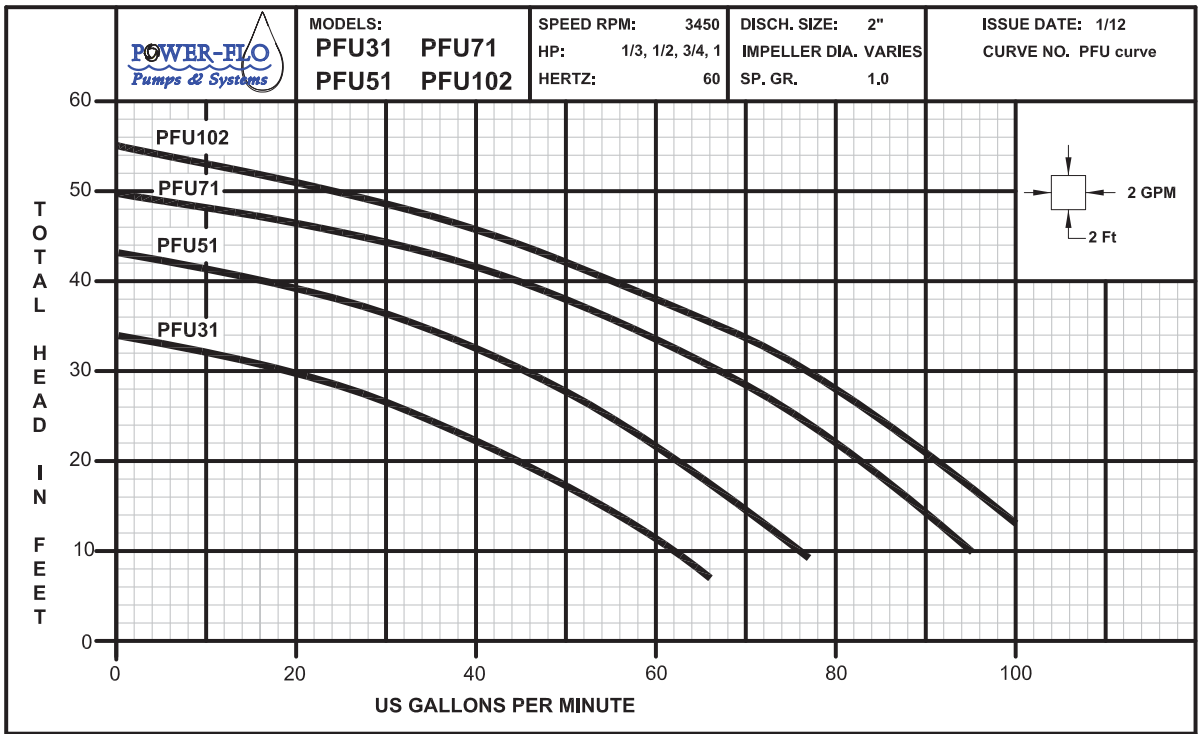

Power-Flo Pumps & Systems • 877-24PUMPS • fax: 516-812-6897 • www.powerflopumps.com

BASE, BASE-OPTION & FITTING TO BE ORDERED TOGETHER AS REQUIRED BUT ACCOUNTED FOR SEPARATELY. The drawings on this page show a base, which is not included in fitting option.

PEM 62202

54mm / 2.125" O.D. OVERFLOW STANDPIPE

For suggested water surface of 10 m2 / 105 sq ft.
Overflow weir length = 0.16m \ 0.53 Ft

62202-X	62202-05-X	62202	62202-05
#610-4220	#610-4230	#610-4200	#610-4210

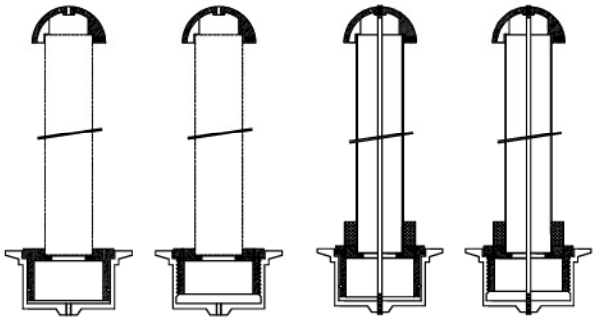

PEM 62201

41mm / 1.625" O. D. OVERFLOW STANDPIPE

For suggested water surface of 5 m2 \ 50 sq ft.
Overflow weir length = 0.10m \ 0.40 Ft

62201-X	62201-05-X	62201	62201-05
#610-4120	#610-4130	#610-4100	#610-4110

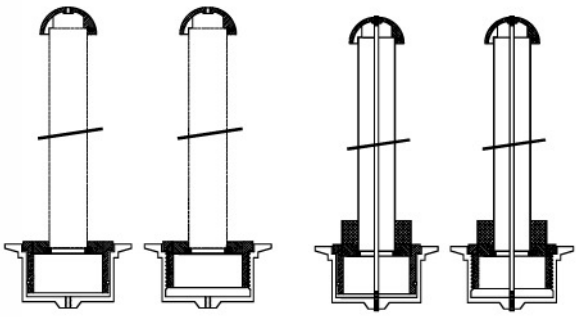

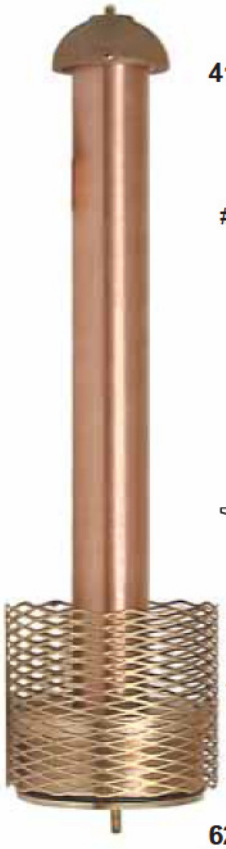

PEM 62201

PEM 62204

105mm / 4.125" O. D. OVERFLOW STANDPIPE

For suggested water surface of 25 m2 \ 270 sq ft.
Overflow weir length = 0.32m \ 1.05 Ft

62204 X	62204-05-X	62204	62204-05
#610-4420	#610-4430	#610-4400	#610-4410

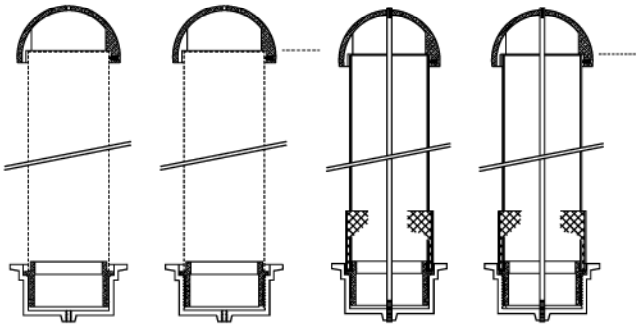

PEM 62203

79mm / 3.125" O.D. OVERFLOW STANDPIPE

For suggested water surface of 15 m2 \ 160 sq.ft
Overflow weir length = 0.24m \ 0.79 Ft

62203-X	62203-05-X	62203	62203-05
#610-4320	#610-4330	#610-4300	#610-4310

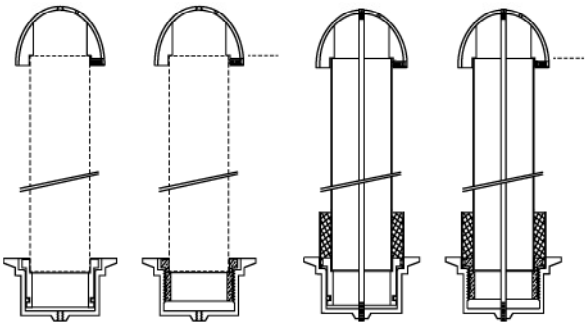

PEM 6220 Series Overflow Stand Pipes & Drains are made of bronze, brass and/or copper and are stainless steel fitted. The domes are natural bronze, chrome plating of dome and/or stand pipe at extra cost.
For metric stainless steel stand pipes see page 621

Stand pipes 62201 & -05, 62202 & -05, 62203 & -05 also 62204 & -05 are supplied as standard for 400mm \ 16" water depth and with debris screen to fit into base. This is to keep bottom debris out of drain, when the stand pipe is lifted. For other water depths, the stand pipes can be custom made to suit at extra cost. **X-type** stand pipes and drains consist of base adapter with solder fit for copper tube plus the dome or cover. The copper tube and assembly is by supplier or contractor to suit.
For water depth's greater than 0.6m \ 2 Feet, the 05 threaded option is required to be able to remove the stand pipe. Standard stand pipes & drains have slip in joints with 'O' ring seals. Stand pipes & drains with 05 Options have threaded connections with O ring seal.
For absorption capacity use waterfall data x overflow weir length (as shown for each size) x maximum freeboard before overflowing. Where required use multiple overflows. The general purpose of the overflow stand pipe is to prevent the overflowing of the pool and when lifted to drain a pool. Base, pipe connection size can be tabulated from overflow rate x head pressure of water depth of pool. The absorption rates shown are average and might vary due to climatic conditions at the site. The overflow must be large enough to drain off the water in an emergency, should the make up water supply fail to close.

All stand pipes but the 'X' type, are made vandal resistant by bolting down the domes with center rods to the base. In addition the domes are secured with anti-theft lockscrews to prevent the unscrewing of the domes or covers.

TO SPECIFY & ORDER :
Base + Base Option + Choice of Stand Pipe
(A threaded stand pipe requires a threaded Base (/-05)