Dollar Tree

Whitewater, Waukesha County, WI
Section 6, Township 4 N, Range 15 E

Construction Documents

SITE BENCHMARKS:

CP# 10
1/2" Iron Bar W/Control Cap
NORTHING: 424907.69
EASTING: 703626.25
ELEVATION: 843.43

CP# 11
1/2" Iron Bar W/Control Cap
NORTHING: 424884.24
EASTING: 703979.48
ELEVATION: 837.62

CP# 12
1/2" Iron Bar W/Control Cap
NORTHING: 424422.25
EASTING: 703919.91
ELEVATION: 843.08

CP# 13
1/2" Iron Bar W/Control Cap
NORTHING: 424492.18
EASTING: 703487.28
ELEVATION: 842.03

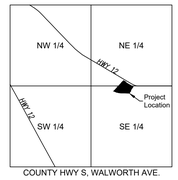

LOCATION MAP
SECTION 06-4N-15E
Scale 1" = 2000'

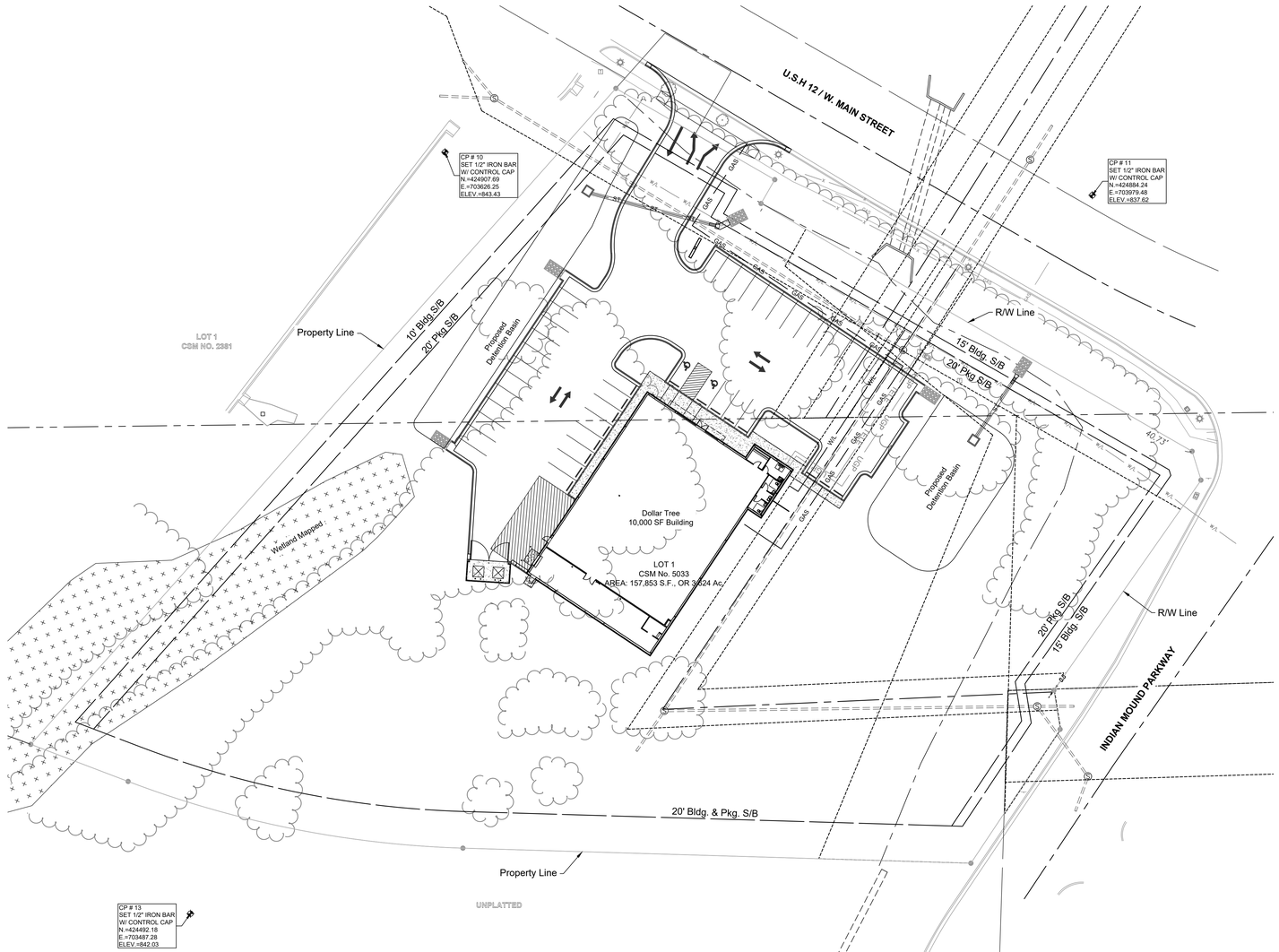

Sheet List Table	
Sheet Number	Sheet Title
C0.0	General Layout
C0.1	General Notes
C1.0	Existing Condition
C1.1	Demolition Plan
C2.0	Site Plan
C2.1	Dimension Plan
C3.0	Grading Plan
C3.1	Spot Grading Plan
C3.2	Grading Details
C4.0	Site Utility Plan
C5.0	Drainage Map
C5.1	Storm Plan and Profile 1
C5.2	Storm Plan and Profile 2
C6.0	Erosion Control Plan I
C6.1	Erosion Control Plan II
C6.2	Erosion Control Plan III
C6.3	Erosion Control Details
C6.4	Seeding Plan
C6.5	Irrigation Coverage Plan
C7.0	Standard Details

LEGAL DESRIPTION:

Lot 1 of Certified Survey Map No. 5033, recorded in Walworth County Register of Deeds Office on June 10 2022, as Document No. 1063365, being part of Lot 1 of Certified Survey Map No. 2381 recorded as Document No. 272112, being part of the SW 1/4 and SE 1/4 of the NE 1/4 and part of the NW 1/4 and NE 1/4 of the SE 1/4 of Section 6, Township 4 North, Range 15 East, of the 4th Principal Meridian, City of Whitewater, Walworth County, Wisconsin.

FLOOD PLAIN NOTES:

According to the F.E.M.A. Flood Insurance Rate Map Number 55127C0009E, revised 09/03/2014, this tract graphically lies in OTHER AREAS, ZONE X, defined as areas determined to be outside the 0.2% annual chance floodplain.

UTILITIES NOTE

The information concerning locations of underground utilities shown hereon which are not visible from the surface, has been taken from the records and field locations of the various utility companies and has not been field verified by this company. these locations are not to be construed as accurate or exact.

NOTE:

48 hours prior to commencement of construction, the contractor shall notify the following companies for field verification of underground utilities.

Address:
No address available

Zoning:

B-1 (General Commercial)

Setbacks:

- Front: 15' (Street Yard)
- Side: 10'
- Rear: 20
- Parking: 20'

UTILITIES

Whitewater - Public Works
312 W. Whitewater St.
Whitewater, WI 53190
262-473-0139

Whitewater - Fire & EMS
312 W. Whitewater St.
Whitewater, WI 53190
262-473-0112

Whitewater - Police Dept.
312 W. Whitewater St.
Whitewater, WI 53190
262-473-1371

One Call of Wisconsin
811
Wisconsin Diggers Hotline: 800-242-8511
Michigan Miss DIG: 800-482-7171

Electric Service - WE Energies
Business: 800-714-7777
Emergency: 800-662-4797

Natural Gas - WE Energies
Business: 800-714-7777
Emergency: 800-261-5325

Water Service - Whitewater
312 W. Whitewater St.
Whitewater, WI 53190
Water Utility Superintendent, Jim Bergner
jbergner@whitewater-wi.gov
262-473-0560

Sewer Service - Whitewater
312 W. Whitewater St.
Whitewater, WI 53190
262-473-0139
Wastewater Utility Superintendent, Ben Mielke
bmielke@whitewater-wi.gov
262-473-0560

LEGEND

	Existing Section Line		Proposed Right-of-Way
	Existing Right-of-Way Line		Proposed Property Line
	Existing Lot Line		Proposed Lot Line
	Existing Easement Line		Proposed Easement
	Existing Curb & Gutter		Proposed Curb & Gutter
	Existing Sidewalk		Proposed Sidewalk
	Existing Storm Sewer		Proposed Storm Sewer
	Existing Storm Structure		Proposed Storm Structure
	Existing Waterline		Proposed Fire Hydrant
	Existing Gas Main		Proposed Waterline
	Existing Sanitary Sewer		Proposed Sanitary Sewer
	Existing Sanitary Manhole		Proposed Sanitary Manhole
	Existing Contour Major		Proposed Contour Major
	Existing Contour Minor		Proposed Contour Minor
			Future Curb and Gutter
U/E	Utility Easement		
SS/E	Sanitary Sewer Easement	A/E	Access Easement
D/E	Drainage Easement	T/E	Temporary Easement

Consultant:
Renaissance Infrastructure Consulting, LLC
Contact Person: Andy Gabbert
8653 Penrose Lane
Lenexa, KS 66218
agabbert@ric-consult.com
(913) 333-3880

Owner:
USFP, LLC
Contact Person: Mike Belew
4706 Broadway, Suite 240
Kansas City, MO 64112
mbelew@usfpco.com
www.uspfco.com
(816) 645-8963

Construction Documents

22-0111-24
Dollar Tree
Whitewater, Waukesha County, WI

General Layout

NO.	DATE	REVISION

DRAWN BY AFB | CHECKED BY PNC

Renaissance Infrastructure Consulting
913.317.9500
WWW.RIC-CONSULT.COM
8653 PENROSE LANE
LENEXA, KANSAS 66219

WISCONSIN
PATRICK N. CASSITY
E-45916-6
KANSAS CITY, MO
PROFESSIONAL ENGINEER

Sheet
C0.0

afernandezbeato
Aug 17, 2023-3:22pm
X:\0 Projects\2022\22-0111\24- Whitewater\Dwg\Sheets\CD\22-0111-24 CD-GEN-LAY-01.dwg

ADA ACCESSIBLE ROUTE NOTES

1. All Accessible route construction shall conform to the latest version of the ADA Standards for Accessible Design published by the Department of Justice and the Proposed Accessibility Guidelines for Pedestrian Facilities in the Public Right-of-Way published by the United States Access Board.
2. Other than ramps and ramp runs, walking surfaces must have running slopes not steeper than 1:20.
3. The cross slope of walking surfaces shall not be steeper than 2%.
4. The minimum width for a linear segment of accessible route shall be 36 inches.
5. Where the accessible route makes a 180 degree turn around an element which is less than 48 inches wide, clear width shall be 42 inches minimum approaching the turn, 48 inches minimum at the turn and 42 inches leaving the turn.
6. An accessible route with a clear width less than 60 inches shall provide passing spaces at intervals of 200 feet maximum. Passing spaces shall be 60 inch by 60 inch minimum.
7. Ramp runs shall have a running slope not steeper than 1:12.
8. Ramp runs with a rise greater than 6 inches shall have handrails.
9. Ramp landings with a maximum slope of 1:48 shall be provided before and after ramp runs.
10. The maximum rise of a ramp run shall be 30 inches.
11. The maximum counter slope between the pavement and the curb at a curb ramp shall be 1:20.
12. Curb ramp landings with a maximum slope of 1:48 shall be provided at the top of curb ramps with a clear width of 60 inches.
13. Detectable warning surfaces complying with the latest ADA Standards shall be provided at pedestrian street crossings and refuge islands.
14. Passenger loading zones shall be provided adjacent to any ADA Accessible stall and have a 2% maximum slope in all directions.
15. Contractor to field verify existing site conditions and contact the engineer if field conditions do not match plan prior to construction.

LAYOUT & PAVING NOTES

1. All construction shall conform to the Town of Whitewater minimum design standards.
2. Contractor shall keep a full set of Town of Whitewater Standard Details onsite at all times.
3. The contractor shall check existing grades, dimensions, and inverts in the field and report any discrepancies to the architect/engineer prior to beginning work.
4. The contractor shall verify the exact location of all existing utilities, take care to protect utilities that are to remain, and repair contractor caused damage according to current local standards and at the contractor's expense. Coordinate all construction with the appropriate utility company.
5. The contractor shall comply with all local codes, obtain all permits, and pay all fees prior to beginning work.
6. Prior to installing, constructing, or performing any work in the public right of way or on the public storm sewer line (including concrete pavement or connecting private drainage systems to the storm sewer), contact City Public Works for inspection of the work. Contact must be made at least 24 hours prior to start of the work.
7. Provide a smooth transition between existing pavement and new pavement. Field adjustment of final grades may be necessary. Adjust all utilities prior to installation of pavement.
8. The contractor shall protect all trees to remain, in accordance with the specifications. Do not operate or store heavy equipment, nor handle, nor store materials within the drip lines of trees or outside the limit of grading.
9. Concrete walks and pads shall have a broom finish. All concrete shall be 4,000 p.s.i. unless otherwise noted. Curb ramps, sidewalk slopes, and driveway ramps shall be constructed in accordance with all current local requirements. If applicable, the contractor shall request inspection of sidewalk and ramp forms prior to placement of concrete.
10. All damage to existing asphalt pavement to remain which results from new construction shall be replaced with like materials at contractor's expense.
11. Dimensions are to the back of curb, or edge of concrete, unless otherwise noted.
12. Maintain one set of as-built drawings on the job site for distribution to the engineer upon completion.
13. For all asphalt pavement, the contractor shall have no more than 30% recycled material in the base course and no recycled material in the surface course.

PAVEMENT MARKING AND SIGNAGE NOTES

1. Parking stall marking stripes shall be four inch (4") wide white stripes. Handicap stall marking shall be furnished at locations shown on plans.
2. Traffic control devices and pavement markings shall conform to the requirements of the "Manual of Uniform Traffic Control Devices."
3. Traffic control and pavement markings shall be painted with a white Sherwin Williams TM2125 HOTLINE Fast Dry or approved equal. The pavement marking shall be applied in accordance with manufacturers recommendations. Apply on a clean, dry surface and at a surface temperature of not less than 70°f and the ambient air temperature shall not be less than 60°f and rising. Two coats shall be applied.

WRITTEN SEQUENCING

1. Implement Pre-Construction Plan:
   All temporary structural BMP's shown on the BMP plan must be in place before any site disturbance. Clearing necessary to place temporary structural BMP's is the minimum required for installation. Coordinate clearing necessary to place temporary structural BMP's with local weather forecast so that clearing and placement may be completed within a forecast dry period. Stabilize all erosion control measures after installation. Temporary Barrier Fence shall be in Place, around areas not to be disturbed, prior to any construction activities. This area includes Stream Corridor.
2. Clear and Stabilize Work Areas:
   Grade contractor areas and place all-weather surface on contractor areas.
3. Clearing and Grubbing:
   After Phase I BMP's are installed, contractor may clear, grub, and demo required areas as necessary.

GRADING NOTES

1. All construction shall conform to the City's minimum design standards.
2. Spot Grades shown herein shall govern over finished grades.
3. All traffic control shall be in conformance with the Manual of Uniform Traffic Control Devices (MUTCD).
4. The contractor is responsible for the protection of all property corners and section corners. Any property corners and/or section corners disturbed or damaged by construction activities shall be reset by a Registered Land Surveyor licensed in the State of Wisconsin, at the contractor's expense.
5. The contractor shall be responsible for the restoration of the right-of-way and for damaged improvements such as curbs, driveways, sidewalks, streetlight and traffic signal junction boxes, traffic signal loop lead ins, signal poles, irrigation systems, etc. Damaged improvements shall be repaired in conformance with the latest City standards and to the City's satisfaction.
6. The contractor is responsible for providing erosion and sediment control BMPs to prevent sediment from reaching paved areas, storm sewer systems, drainage courses and adjacent properties. In the event the prevention measures are not effective, the contractor shall remove any debris, silt, or mud and restore the right-of-way, or adjacent properties to original or better condition.
7. The contractor shall sod all disturbed areas within the public street right-of-way unless otherwise noted on the plans or if specific written approval is granted by the City.
8. All public street sidewalk ramps constructed will be required to comply with the Americans with Disabilities Act (ADA).
9. Excavation for utility work in public street right-of-way requires a Right-of-Way Work Permit from the Public Works Department, in addition to all other permits.
10. All work shall be confined within easements and/or construction limits as shown on the plans.
11. Curb stakes and hubs shall be provided at all high points, low points, ADA ramp openings, and on each side of all curb inlets when setting string line.
12. All National Pollution Discharge Elimination System (NPDES) standards shall be met.
13. Public and Private utility facilities shall be moved or adjusted as necessary by the owners to fit the new construction unless otherwise noted on the plans. The Contractor is responsible for the cost of utility relocations unless otherwise indicated on the plans.

EARTHWORK NOTES:

1. CONTOURS AND ELEVATIONS: Existing and proposed contours are shown on plans at one feet (1') contour intervals, unless otherwise noted. Proposed contours and elevations shown represent approximate finish grade.
2. CLEARING AND GRUBBING: Prior to the start of grading and earthwork, the areas to be graded shall be stripped of all vegetation, organic matter, and topsoil, to a minimum depth of four inches (4") or as otherwise directed by the Geotechnical Engineer. Stripping materials shall not be incorporated into structural fills. Topsoil materials shall not be used in building and pavement areas.
3. TOPSOIL: Prior to the start of grading, the contractor shall strip all topsoil from areas to be graded and stockpile at a location on or adjacent to the site as directed by the owner. At completion of grading operations and related construction, the contractor will be responsible for redistribution of topsoil over all areas disturbed by the construction activities. Topsoil shall be placed to a minimum depth of six inches (6") and in accordance with specifications for landscaping.
4. SUBGRADE PREPARATION: Prior to placement of new fill material, the existing subgrade shall be proof rolled and approved under the direction of the Geotechnical Engineer or his representative.
5. proof rolling: Prior to the placement of new fill material, the existing subgrade shall be proof rolled and approved under the direction of the Geotechnical Engineer. Unsuitable areas identified by the proof rolling areas shall be undercut and replaced with controlled structural fill or treated with fly ash per the Geotechnical report.
6. EARTHWORK:
   A. GEOTECHNICAL: All earthwork shall conform to the recommendations of the Geotechnical report.
   B. SURFACE WATER: Surface water shall be intercepted and diverted during the placement of fill.
   C. FILLS: All fills shall be considered controlled or structural fill and shall be free of vegetation, organic matter, topsoil, and debris. All fill required for project shall be provided by the Contractor. Material Shall be pre-approved by the Engineer prior to placement.
   D. EXISTING SLOPES: Where fill material is to be placed on existing slopes greater than 5:1 (horizontal to vertical), existing slope shall be benched providing a minimum vertical face of twelve inches (12"). Fill material shall be placed and compacted in horizontal lifts not exceeding nine inched (9") (loose fit measurement), unless otherwise approved by the Geotechnical Engineer.
   E. COMPACTION REQUIREMENTS: Earth fill material shall be placed and compacted to a minimum density of ninety five percent (95%) of the material's maximum dry density as determined by ASTM D698 (standard proctor compaction). The moisture content at the time of placement and compaction shall be within a range of -2% to 3% above the optimum moisture content as defined by the standard proctor compaction procedure. The moisture contents shall be maintained within this range until completion of the work. Where compaction of earth fill by a large roller is impractical or undesirable, the earth fill shall be hand compacted with small vibrating rollers or mechanical tampers.
7. TESTING AND INSPECTION: Testing and inspection services required to make tests required by the specifications and to observe the placement of fills and other work performed on this project shall be provided by a commercial testing laboratory (Geotechnical Engineer) selected by the owner. The cost of testing will be the owner's responsibility.
8. SEEDING: All areas disturbed by earthwork operations in the right-of-way shall be seeded.
9. Recommendations within the project geotechnical report shall supercede all earthwork notes.

SITE UTILITY NOTES

1. The contractor is specifically cautioned that the location and/or elevation of existing utilities as Shown on these plans is based on records of the various utility Companies, und where possible, measurements taken in the field. The information is not to be relied on as being exact or complete. The contractor must call the appropriate utility companies at least 48 hours before any excavation to request exact field location of utilities. It shall be the responsibility of the contractor to coordinate with and relocate and/or remove all existing utilities which conflict with the proposed improvements shown on the plans.
2. The construction of storm sewers on this project shall conform to the requirements of Whitewater, Wisconsin Technical Specifications and Design Criteria.
3. The contractor shall field verify the exact location and elevation of the existing storm sewer locations and the existing elevations at locations where the proposed storm sewer collects or releases to existing ground. If discrepancies are encountered from the information shown on the plans. The contractor shall contact the design engineer. No pipes shall be laid until direction is received from the design engineer.
4. It will be the contractors responsibility to field adjust the top of all manholes and boxes as necessary to match the grade of the adjacent area. Tops of existing manholes shall be raised as necessary to be flush with proposed pavement elevations, and to be 6-inches above finished ground elevations in non-paved areas. No separate or additional compensation will be made to the contractor for making final adjustments to the manholes and boxes.
5. Inlet locations, horizontal pipe information and vertical pipe information is shown to the center of the structure. Deflection angles shown for storm sewer pipes are measured from the center of the curb inlets and manholes. The contractor shall adjust the horizontal location of the pipes to go to the face of the boxes. All roof drains shall be connected to storm sewer structures. Provide cleanouts on roof drain lines at 100' max. spacing and at all bend points. Do not connect roof drains directly to storm sewer pipes.
6. The contractor shall be responsible for furnishing and installing all fire and domestic water lines, meters, back flow devices, pits, valves and all other incidentals required for a complete operable fire protection and domestic water system, if not furnished or installed by Local Utilities. Coordinate with Local Utilities. All costs associated with the complete water system for the building shall be the responsibility of the contractor. All work shall conform to the requirements of Whitewater, Wisconsin.
7. The contractor shall be responsible for furnishing and installing all sanitary sewer service lines from the building to the public line. The contractor shall refer to the architectural plans for specific locations and elevations of the service lines of the building connection. All work shall conform to the requirements of Whitewater, Wisconsin.
8. The contractor is responsible for securing all permits, bonds and insurance required by the contract documents, Whitewater, Wisconsin, and all other governing agencies (including local, county, state and federal authorities) having jurisdiction over the work proposed by the construction documents. The cost for all permit bonds and insurance shall be the contractors responsibility and shall be included in the bid for the work.
9. By the use of these construction documents the contractor hereby agrees that he/she shall be solely responsible for the safety of the construction workers and the public. The contractor agrees to hold the engineer and owner harmless for any and all injuries, claims, losses or damages related to the project.
10. The contractor shall be responsible for furnishing all materials, tools and equipment and installation of electrical power, telephone and gas service from a point of connection from the public utility lines to the building structure. This will include all conduits, service lines, meters, concrete pads and all other incidentals required for a complete and operational system as required by the owner and the public utilities. Refer to building plans for exact tie-in locations of all utilities. Contractor shall verify connection points prior to installation of utility line.
11. All fill material is to be in place, compacted, and consolidated before installation of proposed utilities. On-site geotechnical engineer shall provide written confirmation that this requirement has been met and that utilities may proceed in the fill areas. All utilities are to be placed in trench conditions.
12. Contractor shall notify the utility authorities inspectors 48 hours before connecting to any existing line.
13. Storm sewer roof drains(st) shall be as follows (unless otherwise shown on plans).
    -PVC SDR 35 per ASTM D3034, for pipes less than 12' deep.
    -PVC SDR 26 per ASTM D3034, for pipes 12' to 20' deep.
14. Waterlines shall be as follows (unless otherwise shown on plans):
    -for 8" and larger: ductile iron pipe per AWWA C150
    -between 2" and 6": copper tube Type "K" per ANSI 816.22 or ductile iron pipe per AWWA C150
    -For smaller than 2":copper tube Type "K" per ANSI 816.22
15. Minimum trench width shall be 2 feet.
16. Contractor shall maintain a minimum of 72" of cover on all waterlines. All water line joints are to be mechanical joints with thrust blocking as called out in specifications and construction plans. Water mains and service lines shall be constructed in accordance to the Local Utilities specifications for commercial services.
17. All waterlines shall be kept ten feet (10') apart (parallel) from sanitary sewer lines or manholes. Or when crossing, an 18" vertical clearance (outside edge of pipe to outside edge of pipe) of the waterline above the sewer line is required.
18. In the event of a vertical conflict between waterlines, sanitary lines, storm lines and gas lines (existing and proposed), the sanitary line shall be ductile iron pipe with mechanical joints at least 10 feet on both sides of the crossing (or encased in concrete the same distance), the waterline shall have mechanical joints with appropriate thrust blocking as required to provide a minimum of 18" clearance. Meeting requirements ANSI A21.10 or ANSI 21.11 (AWWA C151)(Class 50).
19. All underground storm, sanitary, water and other utility lines shall be installed, inspected and approved before backfilling. Failure to have inspection approval prior to backfill will constitute rejection of work.
20. All necessary inspections and/or certifications required by codes and/or utility service companies shall be performed prior to announced building possession and the final connection of service. Contractor shall coordinate with all utility companies for installation requirements and specifications.
21. refer to building plans for site lighting electrical plan, irrigation, parking lot security system and associated conduit requirements. Coordinate with Owner that all required conduits are in place and tested prior to paving.
22. When a building utility Connection from site utilities leading up to the building cannot be made immediately, temporarily mark all such utility terminations.

GENERAL NOTES

1. All work in public easements and right of way and all erosion control work must comply with the latest edition of the Technical Provisions & Standard Drawings for Roads and Sewers, of Whitewater, Waukesha County, WI. If any general notes conflict with the Technical Provisions & Standard Drawings for Roads and Sewers, of Whitewater, Waukesha County, WI, the Cities standards shall override.
2. All traffic control shall be in conformance with the Manual of Uniform Traffic Control Devices (MUTCD).
3. The contractor is responsible for the protection of all property corners and section corners. Any property corners and/or section corners disturbed or damaged by construction activities shall be reset by a Registered Land Surveyor licensed in the State of Wisconsin, at the contractor's expense.
4. The contractor shall be responsible for the restoration of the right-of-way and for damaged improvements such as curbs, driveways, sidewalks, street light and traffic signal junction boxes, traffic signal loop lead ins, signal poles, irrigation systems, etc. Damaged improvements shall be repaired in conformance with the latest City standards and to the City's satisfaction.
5. The contractor is responsible for providing erosion and sediment control BMPs to prevent sediment from reaching paved areas, storm sewer systems, drainage courses and adjacent properties. In the event the prevention measures are not effective, the contractor shall remove any debris, silt, or mud and restore the right-of-way, or adjacent properties to original or better condition.
6. The contractor shall remove existing trees and shrubbery within the right-of-way adjacent to future thoroughfare improvements.
7. The contractor shall sod all disturbed areas within the public street right-of-way unless otherwise noted on the plans or if specific written approval is granted by the City.
8. All public street sidewalk ramps constructed will be required to comply with the Americans with Disabilities Act (ADA) and Whitewater, Wisconsin sidewalk details.
9. Excavation for utility work in public street right-of-way requires a Right-of-Way Work Permit from the Public Works Department, in addition to all other permits.
10. All work shall be confined within easements and/or construction limits as shown on the plans.
11. Any existing and/or temporary storm sewer pipes and box culverts to be abandoned in place shall be grouted using a slurry grout mixture meeting a 7-day compressive strength of 100-150 psi. The slurry grout mixture of fly ash, cement, fine aggregate, forming agents and water shall be approved by the City and shall possess adequate flow characteristics to fill all voids.
12. All existing utilities indicated on the drawings are according to the best information available to the engineer; however, all utilities actually existing may not be shown. The contractor shall be responsible for contacting all utility companies for an exact field location of each utility prior to any construction. All utilities, shown and un-shown, damaged through the negligence of the contractor shall be repaired or replaced by the contractor at his expense.
13. The contractor will be responsible for all damages to existing utilities, pavement, fences, structures, and other features not designated for removal. The contractor shall repair all damages at his expense.
14. By use of these construction documents the contractor hereby agrees that he shall be solely responsible for the safety of the construction workers and the public. The contractor agrees to hold the engineer and owner harmless for any and all injuries, claims, losses, or damages related to the project.
15. The contractor will be responsible for providing all signage, barricades, lighting, etc., as required for temporary traffic control during the construction of this project. Maintenance of the temporary traffic control devices will be the contractor's responsibility. All traffic control in conduction with construction in the right-of-way shall be in conformance with the City Traffic Control Requirements.
16. Geogrid, footings, or other elements of the retaining wall(s) cannot encroach into the right of way, public easements, or adjacent private property.
17. Contractor shall be responsible for obtaining all permits including land disturbance, right-of-way, hauling, etc., with Public Works prior to construction.
18. Contractor shall restore all disturbed right-of-way upon project completion.
19. Prior to construction, contractor shall install pre-construction erosion control measures.

EROSION CONTROL NOTES

1. All work in public easements and right-of-way and all erosion control work must comply with the latest edition of the Technical Provisions & Standard Drawings for Roads and Sewers, of Whitewater, Wisconsin. If any of the general notes conflict with the Technical Provisions & Standard Drawings for Roads and Sewers of Whitewater, Wisconsin. The Cities standards shall override.
2. The contractor shall provide all materials, tools, equipment, and labor as necessary to install and maintain adequate erosion control, keep the streets clean of mud and debris, and prevent soil from leaving the project site. The contractor's erosion control measures shall conform to Whitewater, Wisconsin Technical Provisions and Specifications.
3. Erosion control plan modifications shall be required if the plan fails to substantially control erosion and offsite sedimentation.
4. The contractor shall be responsible for maintaining erosion control devices and removing sediment until a minimum of 70% of permanent vegetation has become stabilized and established. Erosion control devices shall remain in place until the 70% established vegetation is met, or the duration of the project, whichever is the later date.
5. The contractor shall temporarily seed and mulch all disturbed areas if there has been no construction activity on them for a period of fourteen (14) calendar days.
6. Install "J" Hooks on silt fence every 100 LF
7. Contractor to install all Phase I erosion control devices prior to construction.
8. Contractor shall replace disturbed area with seed or sod, as indicated on the plans, and shall be installed within 14 days after paving completion and final topsoil grading.
9. Topsoil replacement shall be 6" thick.
10. Silt fence to be installed in accordance with Whitewater, Wisconsin Standard Details.
11. Refer to WisDOT Erosion Conrol and Stormwater Quality Guide (or currently adopted edition) for good housekeeping and spill measures.
12. The Contractor shall inspect erosion control devices every 7 days and within 24 hours of a storm of 0.5 inches or more. The Contractor shall repair damage, clean out sediment, and add additional erosion control devices as needed, as soon as practicable, after inspection. The Contractor shall also inspect and assure that all sediment control devices are in working condition prior to any forecasted rainfall.

Construction Documents

22-0111-24
Dollar Tree
Whitewater, Waukesha County, WI

General Notes

NO.	DATE	REVISION

DRAWN BY AFB | CHECKED BY PNC

Renaissance Infrastructure Consulting
913.377.9500
WWW.RIC-CONSULT.COM
8653 PENROSE LANE
LENEXA, KANSAS 66219

WISCONSIN PATRICK N. CASSITY E-45916-6 KANSAS CITY, MO PROFESSIONAL ENGINEER

Sheet
C0.1

afernandezbesto
Aug 17, 2023-2:22pm
Z:\Projects\0CD\22-0111\24- Whitewater\Dwg\Sheets\CD\22-01111-24 CD-GEN-LAY-01.dwg

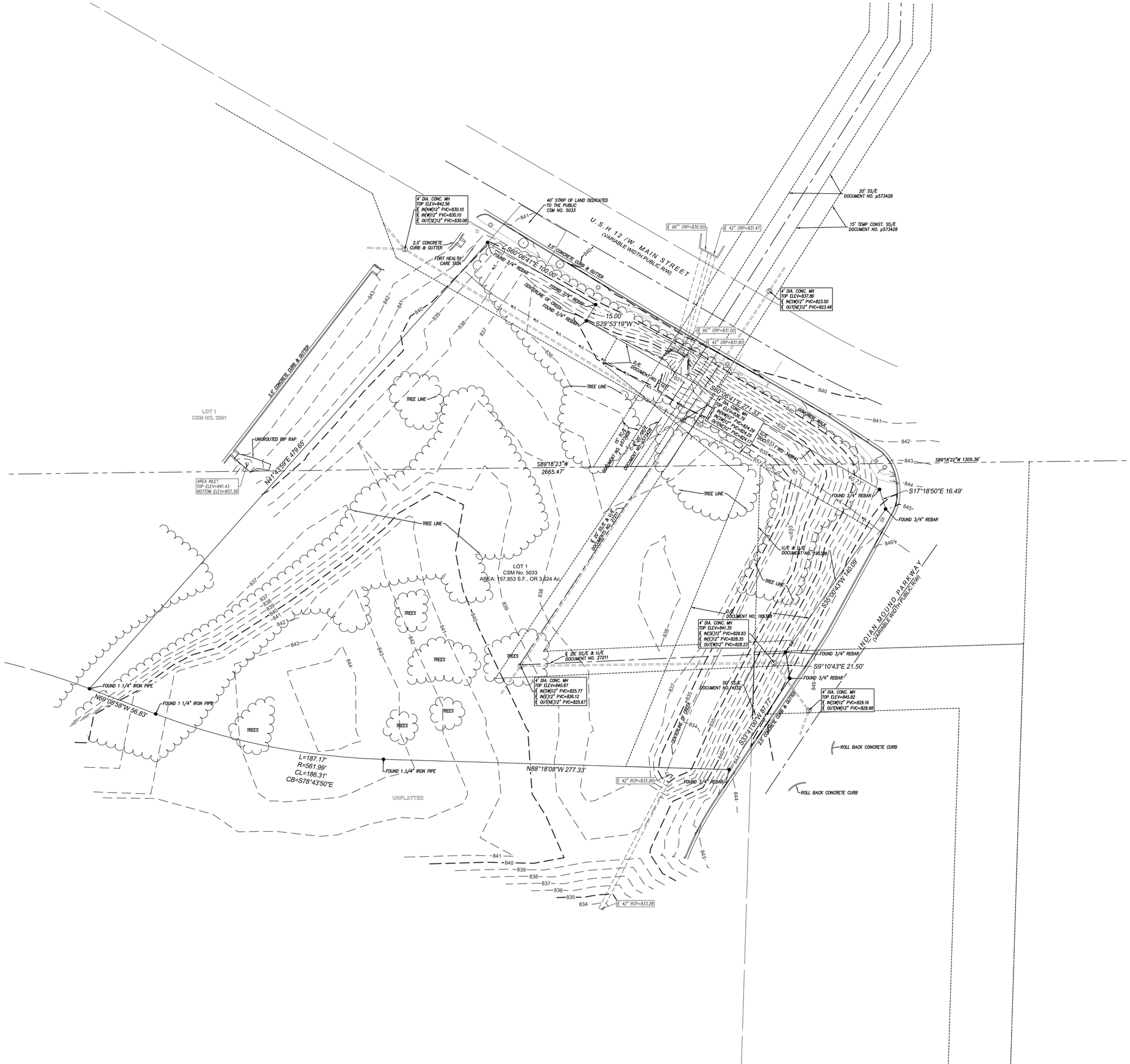

LEGEND:

- FOUND SECTION CORNER AS NOTED
- FOUND MONUMENT AS NOTED
- L LENGTH OF CURVE
- R RADIUS OF CURVE
- CL CHORD LENGTH
- CB CHORD BEARING
- A/E ACCESS EASEMENT
- D/E DRAINAGE EASEMENT
- GL/E GAS LINE EASEMENT
- U/E UTILITY EASEMENT
- ELECTRICAL TRANSFORMER
- GAS GAS LINE
- GAS VALVE
- SIGNS
- TREE DECIDUOUS
- SANITARY MANHOLE
- SAN SANITARY SEWER LINE
- ST STORM SEWER LINE
- TELEPHONE BOX
- WATER METER
- WATER VALVE
- W/L WATER LINE

NORTH

1"=30'

0 15' 30'

Construction Documents

22-0111-24
Dollar Tree
Whitewater, Waukesha County, WI

Existing Condition

NO.	DATE	REVISION

DRAWN BY AFB | CHECKED BY PNC

Renaissance Infrastructure Consulting
8653 Penrose Lane
Lenexa, Kansas 66219
913.317.9500
www.ric-consult.com
WI Certificate of Authority: R068818

WISCONSIN
PATRICK N. CASSITY
E-45916-6
KANSAS CITY, MO.
PROFESSIONAL ENGINEER

Sheet
C1.0

afernandezbeato
Aug 17, 2023-3:22pm
Z:\Projects\2022\22-0111\24- Whitewater\Dwg\Sheets\CD\22-0111-24 CD-EX-COND-01.dwg

Legend

- Concrete Pavement Removal
- Sidewalk Removal
- Tree Removal

Notes:

1. Refer to Sheet C0.0 General Layout for utility and emergency contact information.
2. Refer to notes on Sheet C0.1 General Notes for anything not covered in the Demolition Notes below.

DEMOLITION NOTES:

1. Contractor shall be responsible for raising and removal of the existing structures, related utilities, paving, and any other existing improvements as noted.
2. Contractor is to remove and dispose of all debris, rubbish and other materials resulting from previous and current demolition operations. Disposal will be in accordance with all Local, State and/or Federal regulations governing such operations.
3. All demolition work shall be performed in accordance with the owner's site work specifications.
4. Contractor is responsible for repairs of damage and adjustments due to conflicts or grading to any existing structures or underground utilities that are to remain in place.
5. All items designated to be demolished and removed from the site shall be disposed of in an appropriate location in accordance with state or local guidelines.
6. Public streets and sidewalks shall be kept clean and clear of trash and debris from demolition operations at all times.
7. The contractor shall be responsible for dust and erosion control during demolition operations.
8. The contractor shall coordinate with all applicable utility companies prior to removal or relocation of any utilities and to safely stop services and dismantle service lines prior to beginning demolition operations.
9. Contractor is to remove and re-use if applicable, but is not limited to sewer pipes, power poles and guy wires, water lines and meters, vegetation, asphalt, and other unsuitable debris or material shown or not shown within construction limits and where necessary to allow for construction activity, all material to be removed as unclassified excavation.
10. All cavities created by removal of existing facilities in the area of proposed construction shall be filled and compacted in accordance with the site work specifications to subgrade elevation.
11. The contractor shall exercise extreme caution when working in the vicinity of the existing overhead electrical power lines.
12. Existing utilities are shown as located and identified in the field by utility company representative. The owner and the engineer make no assurance of the actual location, depth, size or type of utility lines shown. The owner and the engineer makes no assurance that all of the existing utility lines on the site are shown.

NORTH

1"=20'

0 10' 20'

Construction Documents

22-0111-24
Dollar Tree
Whitewater, Waukesha County, WI

Demolition Plan

NO.	DATE	REVISION

DRAWN BY	CHECKED BY
AFB	PNC

Renaissance Infrastructure Consulting
8653 Penrose Lane
Lenexa, Kansas 66219
913.317.9500
www.ric-consul.com
WI Certificate of Authority: R068818

WISCONSIN
PATRICK N. CASSITY
E-45916-6
KANSAS CITY, MO
PROFESSIONAL ENGINEER

Sheet
C1.1

afernandezbeato
Aug 17, 2023-2:22pm
J:\Projects\2022\22-0111\24-Whitewater\Dwg\Sheets\CD\22-0111-24 CD-DEMOLITION-01.dwg

Install 5" Sidewalk Concrete Pavement

Install Non-Reinforced PCC Pavement Driveway per City standards

Install 5" Sidewalk Concrete Pavement

Existing 20' Sanitary Sewer and Utility Easement

Install 3" Heavy Duty Asphalt Pavement

Install 7 SY 12" (D50) Rip-rap. 24" Thick

Install 7 SY 12" (D50) Rip-rap. 24" Thick

R/W Line

U.S.H 12 / W. MAIN STREET

Property Line

Install Concrete Flume(Typ.) (See Sheet C7.0 for details)

Install 3" Light Duty Asphalt Pavement

Existing Drainage Easement

Existing Utility Easement

Install 7 SY 12" (D50) Rip-rap. 24" Thick

LOT 1
CSM NO. 2361

Install ADA Signs

Install 7 SY 12" (D50) Rip-rap. 24" Thick

Install Concrete Sidewalk Ramps

Install 5" Concrete Sidewalk Pavement

Install Concrete Flume(Typ.) (See Sheet C7.0 for details)

Install Concrete Flume(Typ.) (See Sheet C7.0 for details)

Install 3" Light Duty Asphalt Pavement

Install 3" Light Duty Asphalt Pavement

Dollar Tree
10,000 SF

Proposed Parking Blocks (Typ.) (See Sheet C7.0 for details)

Construct 3' Curb Transition From 6" to 0"

Existing 20' Sanitary Sewer and Utility Easement

Install Reinforced PCC Pavement Dumpster Pad

Existing Utility and Drainage Easement

Install Trash Enclosure (Re: Arch)
Install 2 Bollards for Each Dumpster

Construct 3' Curb Transition From 6" to 0"

Install 5" Concrete Sidewalk Pavement

Existing Drainage Easement

Existing 20' Sanitary Sewer and Utility Easement

R/W Line

Existing 50' Sanitary Sewer Easement

INDIAN MOUND PARKWAY

Property Line

Site Data Table
Lot Area - 3.62 Acres

Building Area - 10,000 SF

Parking Count Legend

ADA Stall Count (X)

Standard Stall Count (X)

Site Parking Table:

Proposed Building Area:	10,000 sqft
Parking Required:	1space / 250sf = 40 Stalls
Parking Provided:	42 Stalls +
	2 ADA Stalls

NORTH

1"=20'

0 10' 20'

Construction Documents

22-0111-24
Dollar Tree
Whitewater, Waukesha County, WI

Site Plan

NO.	DATE	REVISION

DRAWN BY	CHECKED BY
AFB	PNC

Renaissance Infrastructure Consulting
913.317.9500
WWW.RIC-CONSULT.COM
8653 PENROSE LANE
LENEXA, KANSAS 66219
MO Certificate of Authority: E-2010033630

WISCONSIN
PATRICK N. CASSITY
E-45916-6
KANSAS CITY, MO.
PROFESSIONAL ENGINEER

Sheet
C2.0

afernandezbeato
Aug 17, 2023-2:29pm
Z:\Projects\2022-0111\24- Whitewater\Dwg\Sheets\CD\22-0111-24 CD-SITE-01.dwg

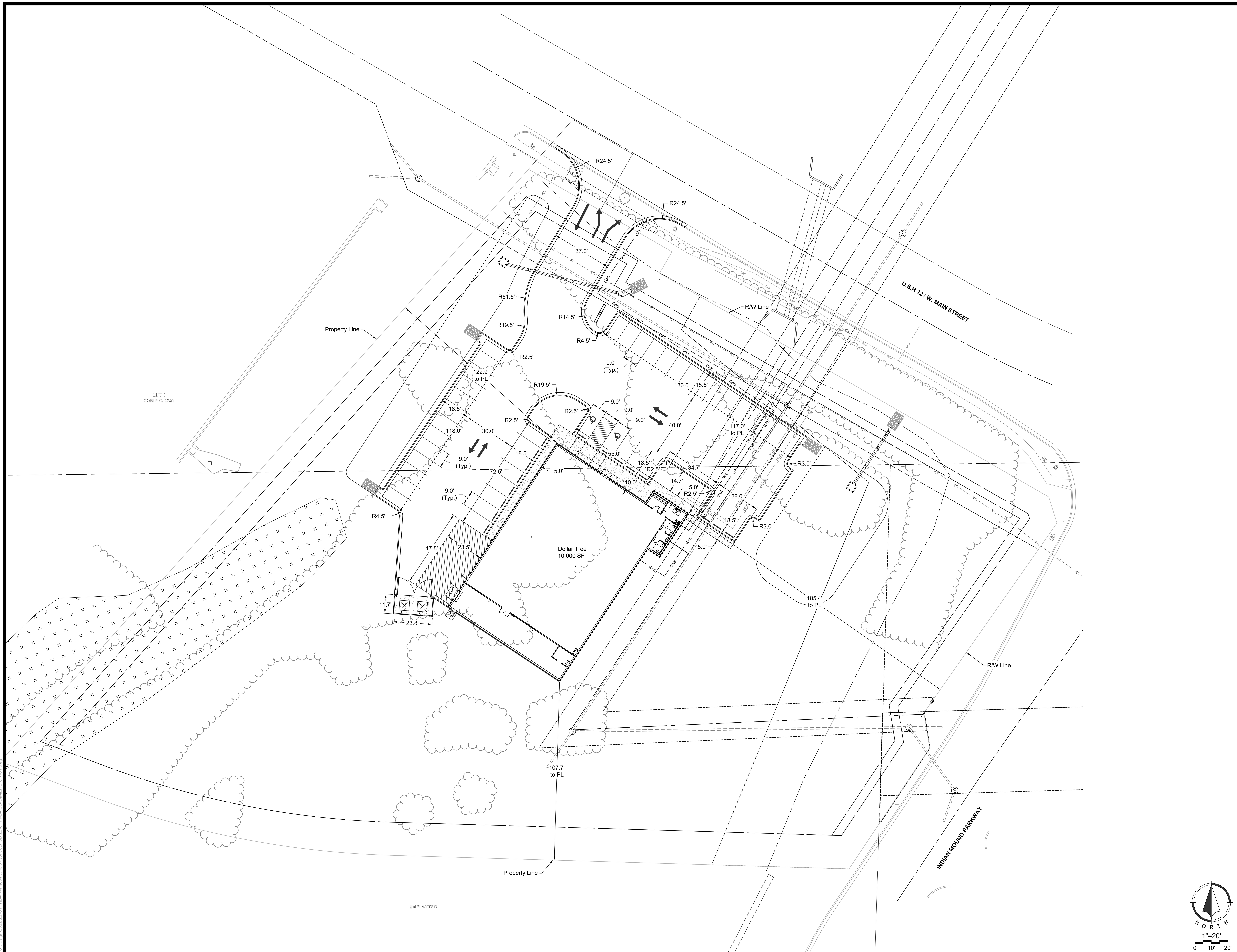

Construction Documents

22-0111-24
Dollar Tree
Whitewater, Waukesha County, WI

Dimension Plan

NO.	DATE	REVISION

DRAWN BY	CHECKED BY
AFB	PNC

Renaissance Infrastructure Consulting

8653 Penrose Lane
Lenexa, Kansas 66219
913.317.9500
www.ric-consult.com
WI Certificate of Authority: R006918

Wisconsin
Patrick N. Cassity
E-45916-6
Kansas City, MO
Professional Engineer

Sheet
C2.1

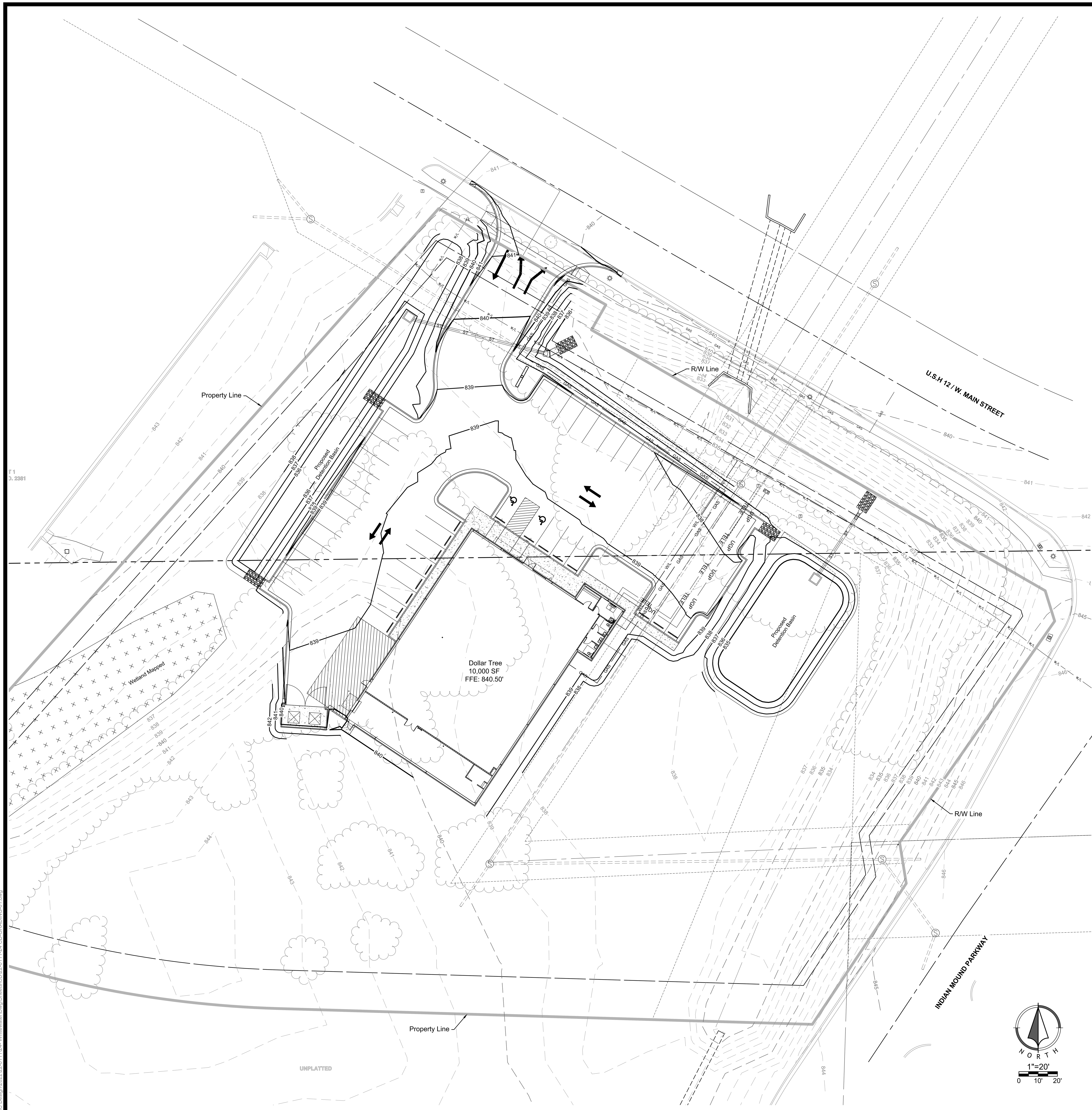

<u>Disturbed Area:</u> 1.24 Acres

<u>Earthwork Quantities:</u>
Cut: 785.63 CY (Cut)
Fill: 2415.65 CY (Fill)
Net: 1630.02 CY Net (Fill)

<u>Grading Notes:</u>

1) Contractor to coordinate work in right-of-way with MoDOT (see Driveway Plans) and field verify existing utility locations and depths prior to construction activities.

<u>Earthwork Quantities Notes:</u>

1. Earthwork quantities based on finished grade surface and do not include adjustments for topsoil and shrinkage.
2. Earthwork quantities do not take into consideration excavation, removal and disposal of material deemed unsuitable by a geotechnical engineer. The earthwork contractor is responsible for excavation, removal and disposal of unsuitable material and for replacing it with suitable material.

LEGEND

TC: Top of Curb
P: Pavement
T/S: Top of Structure
F/L: Flowline of Pipe
G: Ground
(HP) High Point
(LP) Low Point
TW: Top of Wall
BW: Bottom of Wall

Existing Major Contour
Existing Minor Contour
Proposed Major Contour
Proposed Minor Contour

Construction Documents

22-0111-24
Dollar Tree
Whitewater, Waukesha County, WI

Grading Plan

NO.	DATE	REVISION

DRAWN BY	CHECKED BY
AFB	PNC

Renaissance Infrastructure Consulting
8653 Penrose Lane
Lenexa, Kansas 66219
913.317.9500
www.ric-consult.com
WI Certificate of Authority: R068918

WISCONSIN PATRICK N. CASSITY E-45916-6 KANSAS CITY, MO PROFESSIONAL ENGINEER

Sheet
C3.0

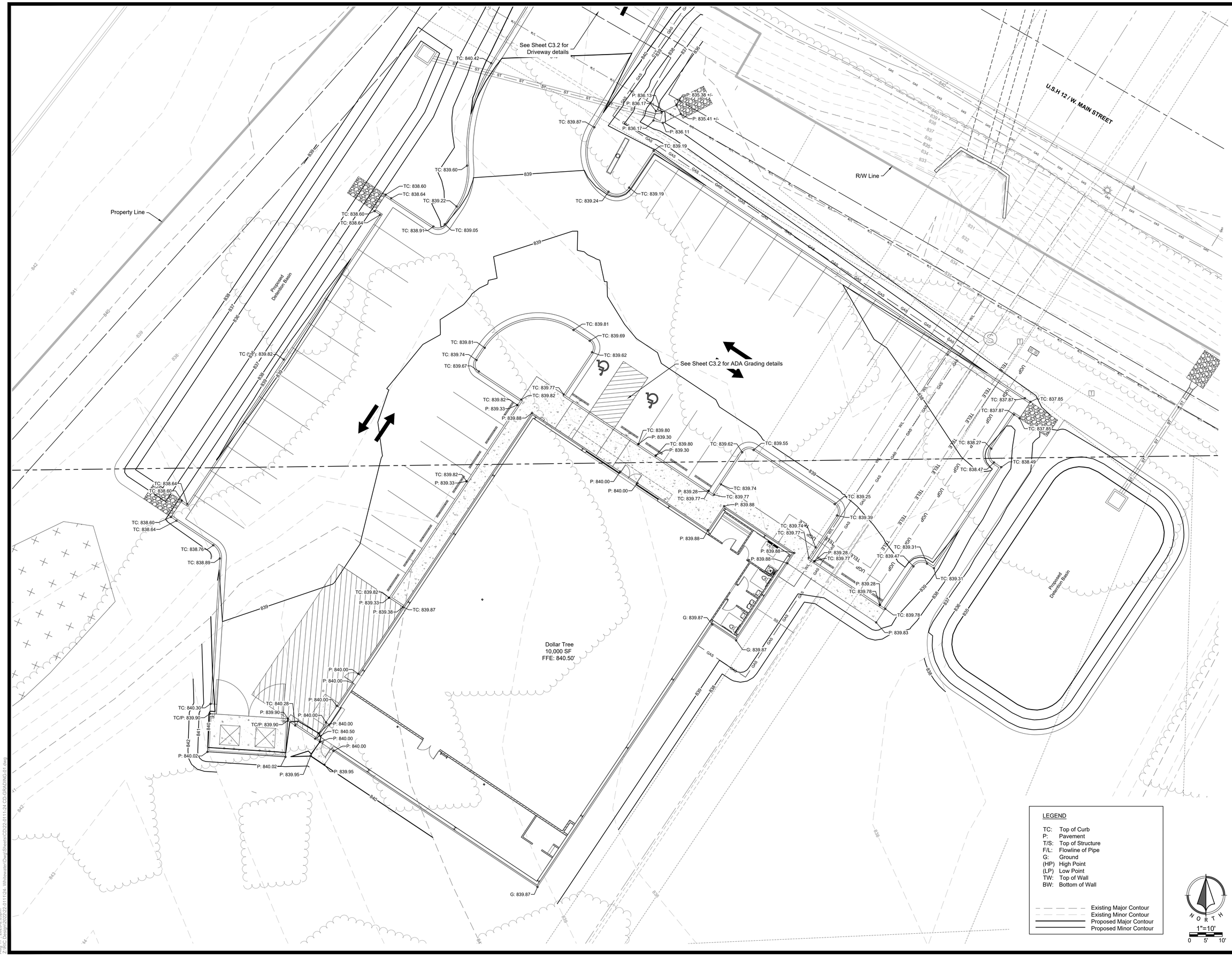

Construction Documents

22-0111-24
Dollar Tree
Whitewater, Waukesha County, WI

Spot Grading Plan

NO	DATE	REVISION

DRAWN BY	CHECKED BY
AFB	PNC

Renaissance Infrastructure Consulting
913.317.9500
WWW.RIC-CONSULT.COM
8653 PENROSE LANE
LENEXA, KANSAS 66219
WI Certificate of Authority: R06818

WISCONSIN PATRICK N. CASSITY E-45916-6 KANSAS CITY, MO. PROFESSIONAL ENGINEER

Sheet
C3.1

afernandezbeato
Aug 17, 2023-2:22pm
Z:\RIC Projects\22-0111-24 - Whitewater\Dwg\Sheets\CD\22-0111-24 CD-GRADING-01.dwg

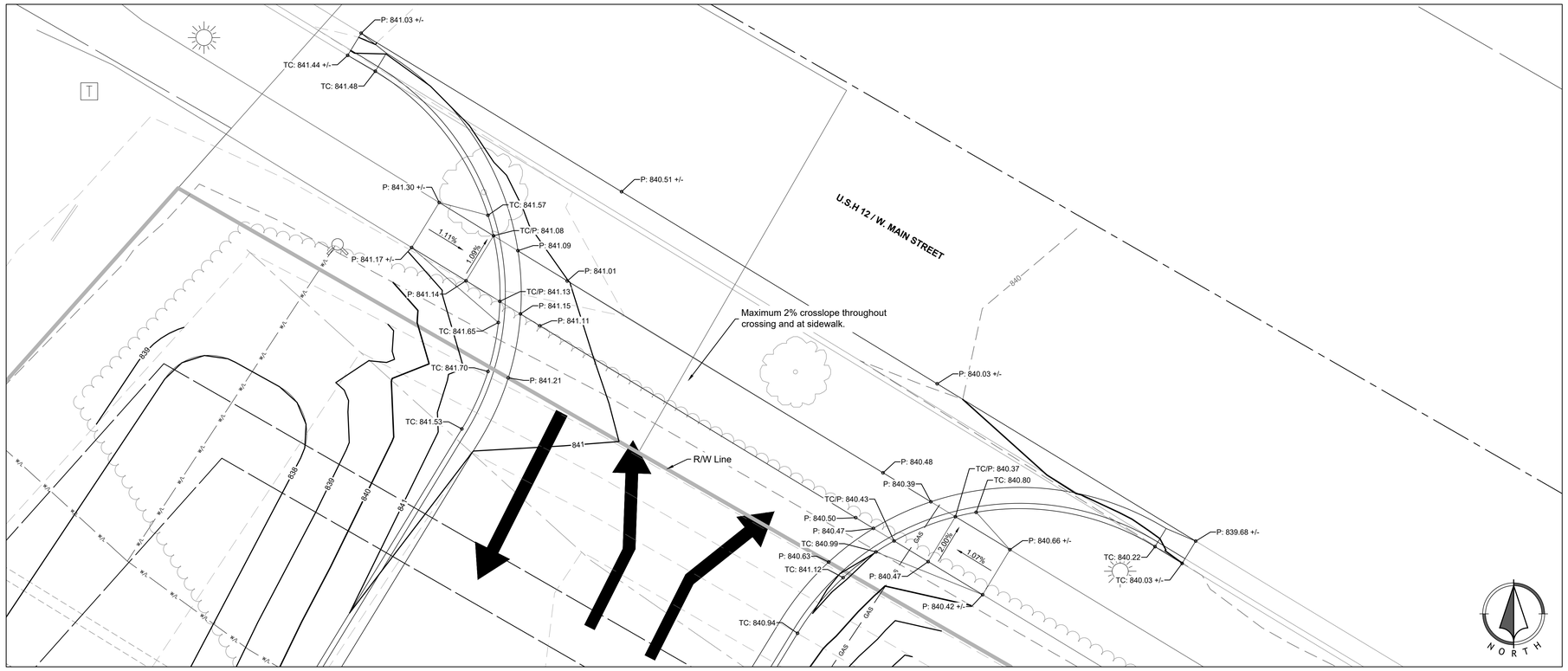

DRIVEWAY GRADING DETAIL
Scale: 1" = 5'

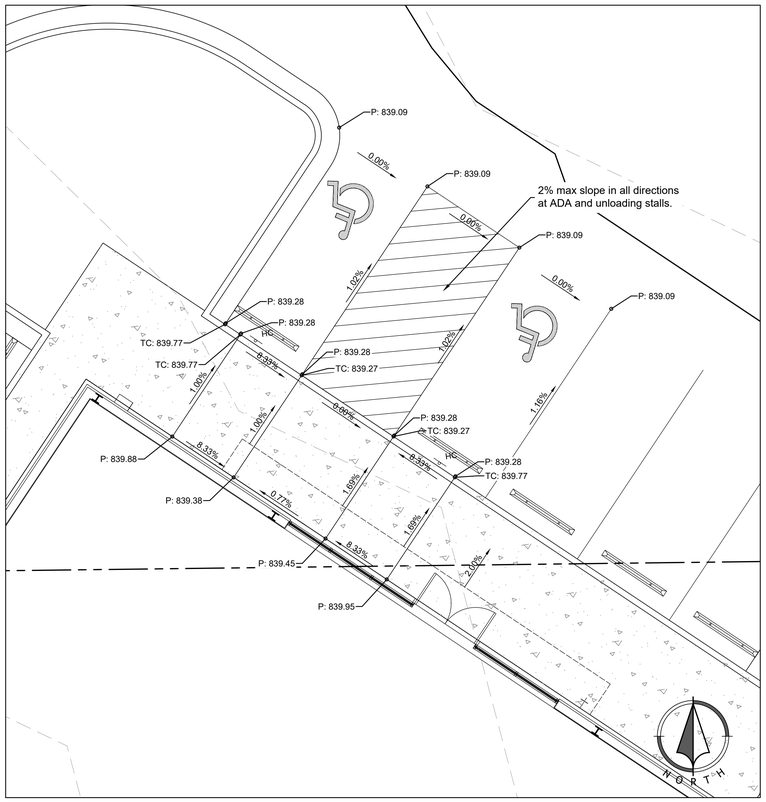

ADA GRADING DETAIL
Scale: 1" = 5'

LEGEND

TC: Top of Curb
P: Pavement
T/S: Top of Structure
F/L: Flowline of Pipe
G: Ground
(HP) High Point
(LP) Low Point
TW: Top of Wall
BW: Bottom of Wall

Existing Major Contour
Existing Minor Contour
Proposed Major Contour
Proposed Minor Contour

Construction Documents

22-0111-24
Dollar Tree
Whitewater, Waukesha County, WI

Grading Details

NO.	DATE	REVISION

DRAWN BY AFB | CHECKED BY PNC

Renaissance Infrastructure Consulting
913.317.9500
www.ric-consult.com
8653 Penrose Lane
Lenexa, Kansas 66219
WI Certificate of Authority: R068818

WISCONSIN PATRICK N. CASITY E-45916-6 KANSAS CITY, MO PROFESSIONAL ENGINEER

Sheet
C3.2

afernandezbasto
Aug 17, 2023-2:22pm
J:\Projects\2022\22-0111-24 - Whitewater\Dwg\Sheets\CD\22-0111-24 CD-GRADING-01.dwg

U.S.H 12 / W. MAIN STREET

4' DIA. CONC. MH
TOP ELEV=842.56
E IN(NW)12" PVC=830.10
E IN(W)12" PVC=830.10
E OUT(SE)12" PVC=830.08

Install Pylon Sign
(Re. MEP for electrical connections)

E 66" CRP=830.50

E 42" CRP=831.47

4' DIA. CONC. MH
TOP ELEV=837.86
E IN(SW)12" PVC=823.50
E OUT(NE)12" PVC=823.48

Existing Gas Main

Existing 20' Sanitary Sewer
and Utility Easement

E 66" CRP=831.00

E 42" CRP=831.90

R/W Line

Existing Communications Box

Existing Electric Transformer

Property Line

4' DIA. CONC. MH
TOP ELEV=835.32
E IN(SW)12" PVC=824.26
E IN(W)12" PVC=824.26
E OUT(NE)12" PVC=824.12

Existing Water Main

Existing Drainage Easement

Existing Utility Easement

LOT 1
CSM NO. 2351

AREA INLET
TOP ELEV=841.43
BOTTOM ELEV=837.39

Contractor shall Install approx. 123 LF Power Service Line. Contractor shall coordinate with MEP and Power Company on size and material of conduits and connection.

Contractor shall Install approx. 120 LF 2-4" PVC Pipes for Communication. Coordinate with Telecommunications Company for connection.

Connect at building per MEP plans.
FL Elev. @ Bldg.=835.50'

Contractor shall Install approx. 111 LF 1" Type K Copper Water Line Contractor shall coordinate with Water Company on Meter Pit Installation, and field location of existing Water Main and Connection at Main

Dollar Tree
10,000 SF
FFE: 840.50'

Contractor shall Install approx. 320 LF Gas Line Contractor shall coordinate with Gas Company on size and material of conduits and for connection with Main Line

Contractor shall install tee connecting sanitary sewer service to existing sanitary sewer main. Refer to connection detail on Sheet C7.0. Contractor to verify location and to coordinate sewer connection with city. Aprox. FL Elev. @ Existing Main= 824.90'

Existing Utility and Drainage Easement

Contractor to install 13 LF 4" SDR 26 PVC Sanitary Service Line Maintain min. 1.00% slope

Existing 20' Sanitary Sewer
and Utility Easement

Existing Drainage Easement

R/W Line

4' DIA. CONC. MH
TOP ELEV=841.35
E IN(SE)12" PVC=828.83
E IN(E)12" PVC=828.35
E OUT(W)12" PVC=828.23

4' DIA. CONC. MH
TOP ELEV=840.87
E IN(SW)12" PVC=825.77
E IN(E)12" PVC=826.12
E OUT(NE)12" PVC=825.67

Existing 20' Sanitary Sewer and
Utility Easement

Existing 50' Sanitary
Sewer Easement

4' DIA. CONC. MH
TOP ELEV=845.82
E IN(SW)12" PVC=829.16
E OUT(NW)12" PVC=828.98

INDIAN MOUND PARKWAY

E 42" RCP=833.26

Property Line

UNPLATTED

NORTH

1"=20'
0 10' 20'

Construction Documents

22-01111-24
Dollar Tree
Whitewater, Waukesha County, WI

Site Utility Plan

NO.	DATE	REVISION

DRAWN BY AFB | CHECKED BY PNC

Renaissance Infrastructure Consulting
8653 Penrose Lane
Lenexa, Kansas 66219
913.317.9500
www.ric-consult.com
WI Certificate of Authority: R068918

WISCONSIN
PATRICK N. CASSITY
E-45916-6
KANSAS CITY, MO
PROFESSIONAL ENGINEER

Sheet
C4.0

aFernandezheath
Aug 17, 2022 - 2:22pm
Z:\RIC Design\2022\22-01111\24- Whitewater\Dwg\Sheets\CD\22-01111-24 CD-UTILITY-01.dwg

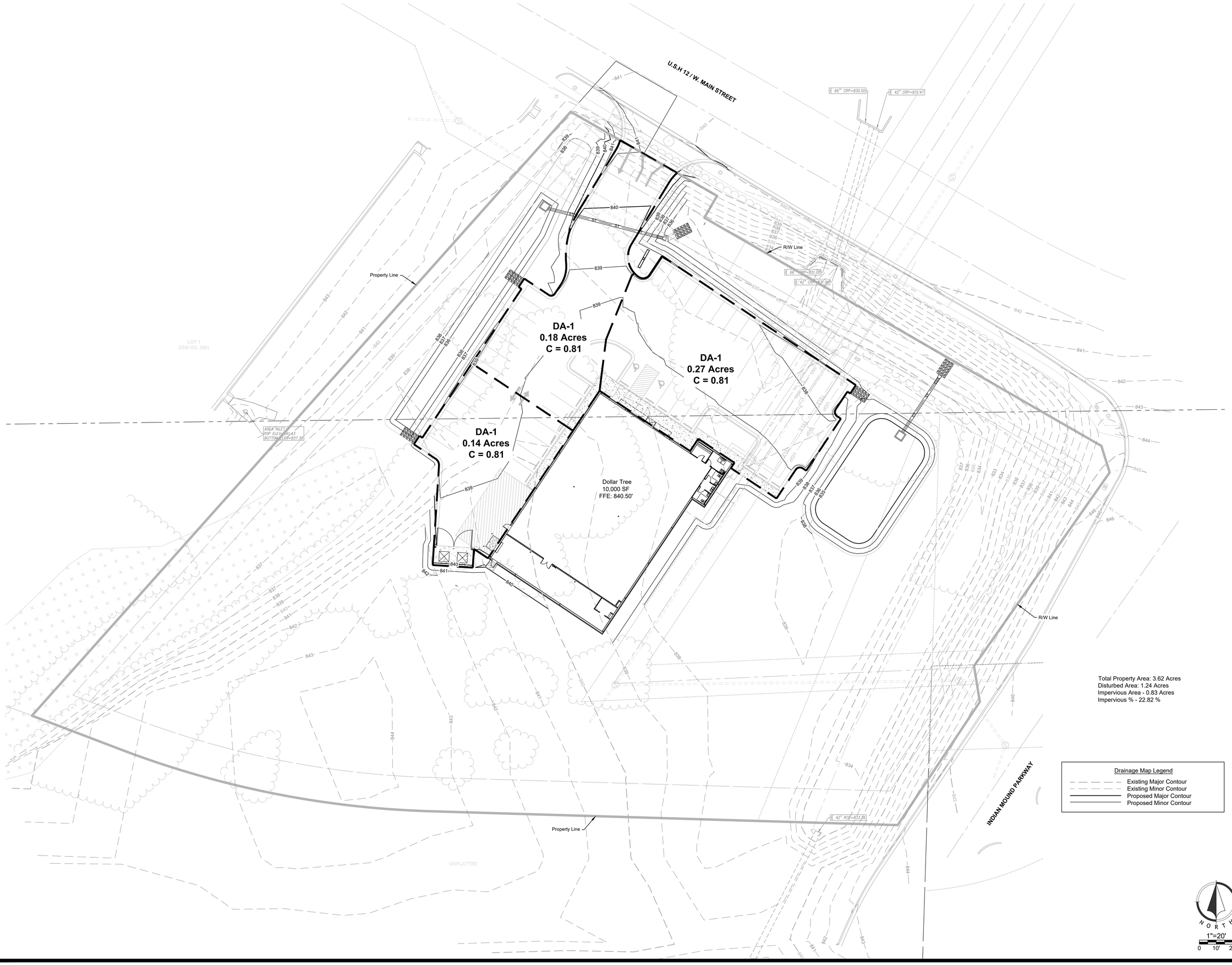

Construction Documents

22-0111-24
Dollar Tree
Whitewater, Waukesha County, WI

Drainage Map

NO.	DATE	REVISION

DRAWN BY AFB | CHECKED BY PNC

Renaissance Infrastructure Consulting
913.317.9500
WWW.RIC-CONSULT.COM
8653 PENROSE LANE
LENEXA, KANSAS 66219

WISCONSIN
PATRICK N. CASSITY
E-45916-6
KANSAS CITY, MO
PROFESSIONAL ENGINEER

Sheet
C5.0

afernandezbeato
Aug 17, 2023-2:23pm
J:\Projects\2022\22-0111\24- Whitewater\Dwg\Sheets\CD\22-0111-24 CD-DRAINAGE-01.dwg

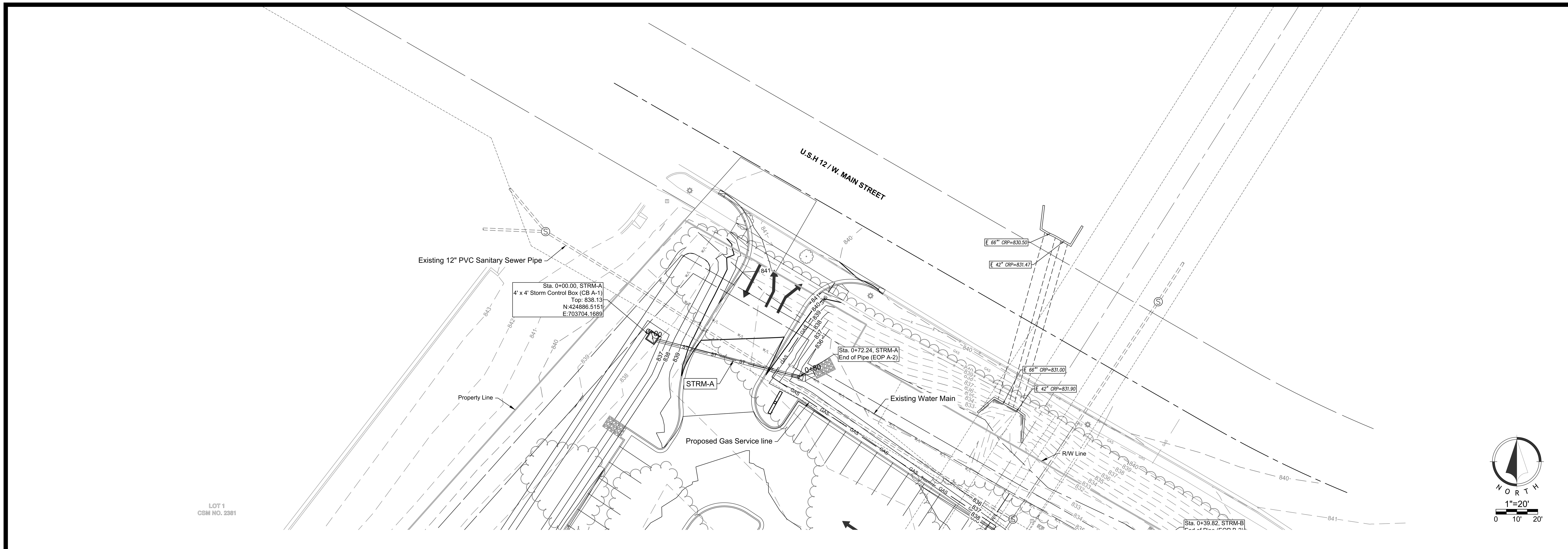

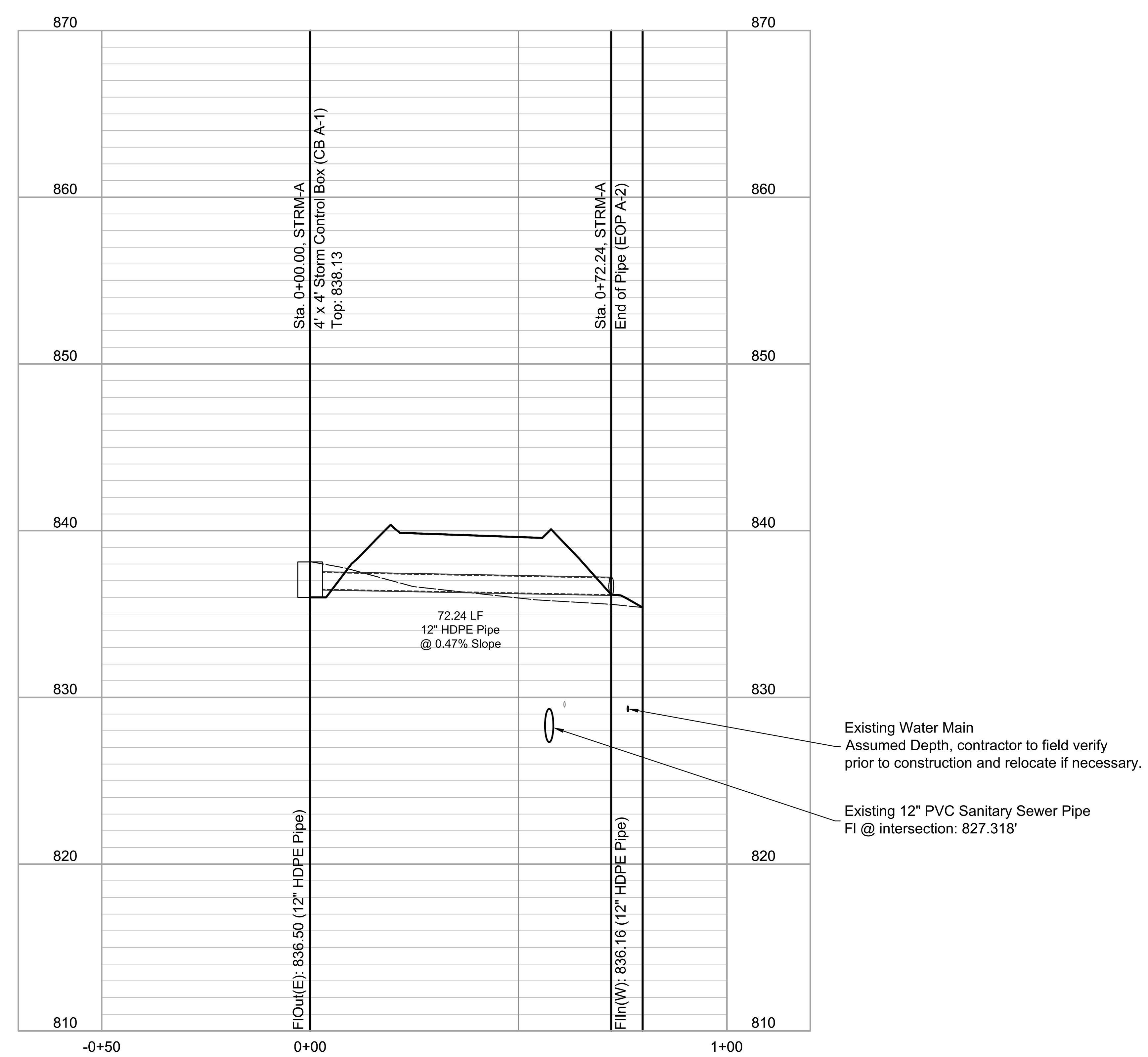

NOTE:

Contractor Shall fill and compact to 95% of standard density to a point 18" minimum above the top of the proposed storm sewer pipe prior to excavation and installation of the pipe

All coordinates are given to the center of the structures

Profile Legend	
— — — — —	Existing Surface
————	Proposed Grading

Construction Documents

22-0111-24
Dollar Tree
Whitewater, Waukesha County, WI

Storm Plan And Profile 1

NO.	DATE	REVISION

DRAWN BY	CHECKED BY
AFB	PNC

Renaissance Infrastructure Consulting
132 Abbie Avenue
Kansas City, Kansas 66103
913.317.9500
www.ric-consult.com
WI Certificate of Authority: R068918

WISCONSIN
PATRICK N. CASSITY
E-45916-6
KANSAS CITY, MO
PROFESSIONAL ENGINEER

Sheet
C5.1

alfernandezfeato
Aug 17, 2023-2:24pm
Z:\RIC Design\2022\22-0111-24 - Whitewater\Dwg\Sheets\CD\22-0111-24 CD-STRM-01.dwg

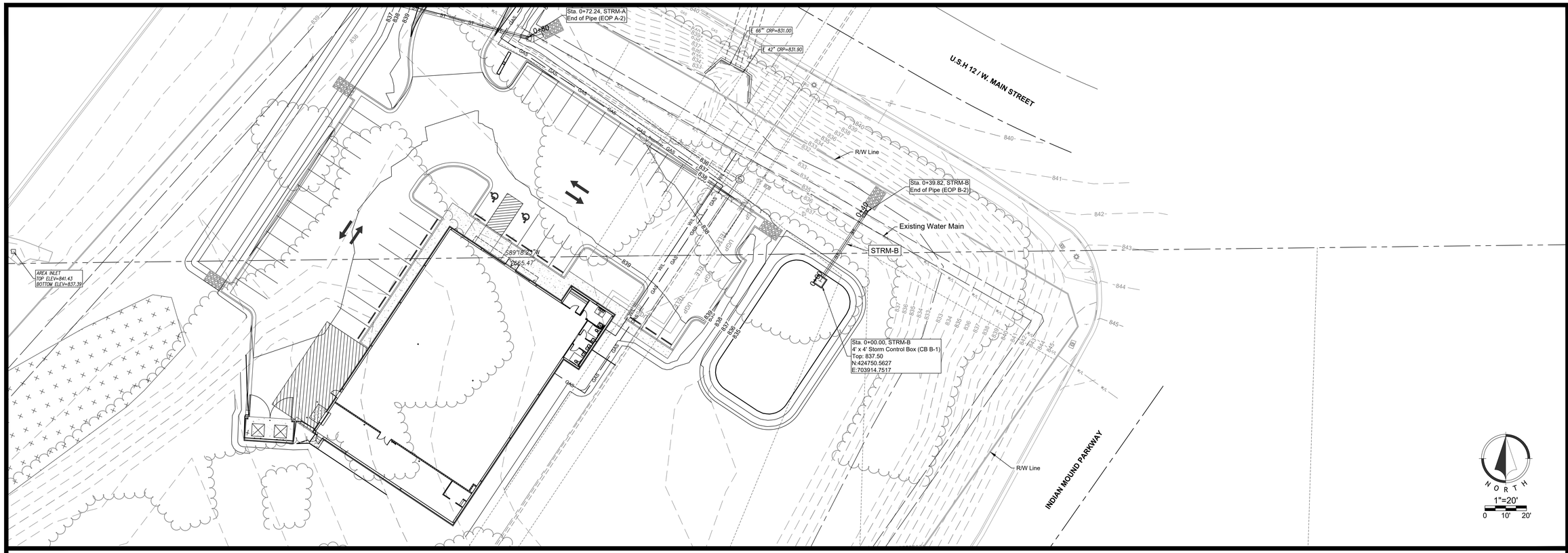

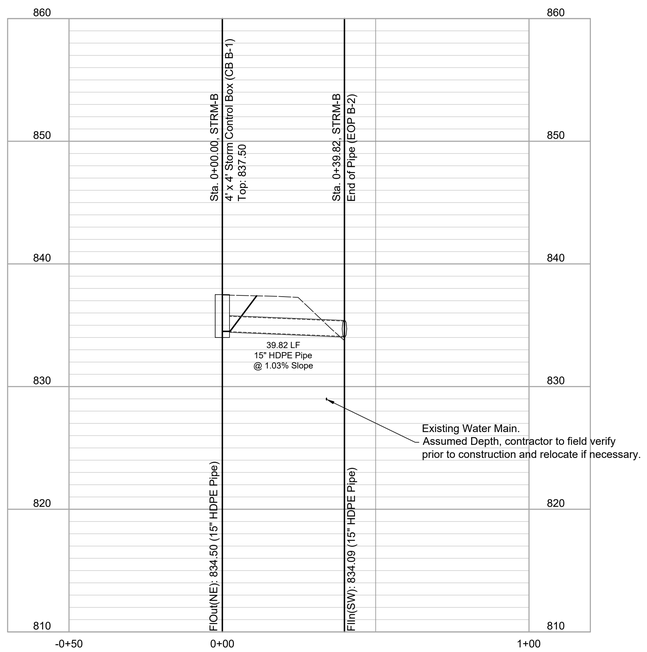

NOTE:

Contractor Shall fill and compact to 95% of standard density to a point 18" minimum above the top of the proposed storm sewer pipe prior to excavation and installation of the pipe

All coordinates are given to the center of the structures

Profile Legend

Existing Surface
Proposed Grading

NORTH
1"=5'
0 5'
1"=20'
0 10' 20'

Construction Documents

22-0111-24
Dollar Tree
Whitewater, Waukesha County, WI

Storm Plan And Profile 2

NO.	DATE	REVISION

DRAWN BY AFB
CHECKED BY PNC

Renaissance Infrastructure Consulting
913.317.9500
www.ric-consult.com
132 ABBIE AVENUE
KANSAS CITY, KANSAS 66103
WI Certificate of Authority: R068918

WISCONSIN
PATRICK N. CASITY
E-45916-6
KANSAS CITY, MO
PROFESSIONAL ENGINEER

Sheet
C5.2

afernandezbeato
Aug 17, 2023-2:24pm
Z:\Projects\2022-2111124- Whitewater\Dwg\Sheets\CD\22-0111-24 CD-STRM-01.dwg

Disturbed Area for Site Improvements : 1.24 Acres

EROSION CONTROL LEGEND

Stabilized Construction Entrance
Staging Area
Concrete Washout
Limits of Disturbance
Perimeter Silt Fence
Inlet Protection

ERODION CONTROL NOTES

1. Erosion control plan modifications shall be required if the plan fails to substantially control erosion and offsite sedimentation.
2. The retention of access controls and sediment controls shall be required for areas where seed has not established 70% cover.
3. The contractor shall temporarily seed and mulch all disturbed areas if soil disturbing activities cease and will not resume for more than 14 days. Stabilization activities must also be completed within 14 days.
4. Install "J' Hooks on silt fence every 100 LF
5. Any location that is being accessed by vehicles needs to have a construction entrance.
6. Contractor must keep a broom on site in order to clean up mud tracked on to the streets immediately.
7. Any contractor parking that is in a disturbed area must be rocked to prevent tracking of mud.

Grading Legend

Existing Major Contour
Existing Minor Contour
Proposed Major Contour
Proposed Minor Contour

WRITTEN SEQUENCING

1. Implement Pre-Clearing Plan:
All temporary structural BMP's shown on the pre-clearing plan must be in place before the general clearing operations. Clearing necessary to place temporary structural BMP's is the minimum required for installation. Coordinate clearing necessary to place temporary structural BMP's with local weather forecast so that clearing and placement may be completed within a forecast dry period. Stabilize all erosion control measures after installation. Temporary Barrier Fence shall be in Place, around areas not to be disturbed, prior to any construction activities. This area includes Stream Corridor.
2. Clear and Stabilize Work Areas:
Grade contractor areas and place all-weather surface on contractor areas.
3. Clearing and Grubbing:
After Phase I BMP's are installed, contractor may clear, grub, and demo required areas as necessary.

	PROJECT STAGE	PLAN REFERENCE NUMBER	BMP DESCRIPTION	REMOVE AFTER PHASE	NOTES
Phase I	A-Prior to Construction	1	Construction Entrance	II	Install Construction Entrance
		2	Staging Area	II	Install Staging Area
		3	Perimeter Silt Fence	III	Install Silt Fence
		4	Concrete Washout	II	Install Concrete Washout as Shown on Plans Prior to Pouring Any Concrete
Phase II	B - During Land Disturbance & Storm Infrastructure Installation	5	Inlet Protection	III	Install Filter Bags Prior to Construction
Phase III	C-Final Stabilization	6	Establish Perennial Vegetation	N/A	Redistribute Topsoil and Seed and Mulch all Disturbed Area. Stabilization Complete when 100% of Disturbed Area is Established with Perennial Vegetation with a Density of 70%

NORTH
1"=20'
0 10' 20'

Construction Documents
22-0111-24
Dollar Tree
Whitewater, Waukesha County, WI

Erosion Control Plan I

NO.	DATE	REVISION

DRAWN BY	CHECKED BY
AFB	PNC

Renaissance Infrastructure Consulting
8653 Penrose Lane
Lenexa, Kansas 66219
913.317.9500
WWW.RIC-CONSULT.COM

WISCONSIN
PATRICK N. CASSITY
E-45916-6
KANSAS CITY, MO
PROFESSIONAL ENGINEER
03/15/23

Sheet
C6.0

Disturbed Area for Site Improvements : 1.24 Acres

EROSION CONTROL LEGEND

Stabilized Construction Entrance
Staging Area
Concrete Washout
Limits of Disturbance
Perimeter Silt Fence
Inlet Protection

EROSION CONTROL NOTES

1. Erosion control plan modifications shall be required if the plan fails to substantially control erosion and offsite sedimentation.
2. The retention of access controls and sediment controls shall be required for areas where seed has not established 70% cover.
3. The contractor shall temporarily seed and mulch all disturbed areas if soil disturbing activities cease and will not resume for more than 14 days. Stabilization activities must also be completed within 14 days.
4. Install "J' Hooks on silt fence every 100 LF
5. Any location that is being accessed by vehicles needs to have a construction entrance.
6. Contractor must keep a broom on site in order to clean up mud tracked on to the streets immediately.
7. Any contractor parking that is in a disturbed area must be rocked to prevent tracking of mud.

Grading Legend

Existing Major Contour
Existing Minor Contour
Proposed Major Contour
Proposed Minor Contour

WRITTEN SEQUENCING

1. Implement Pre-Clearing Plan:
All temporary structural BMP's shown on the pre-clearing plan must be in place before the general clearing operations. Clearing necessary to place temporary structural BMP's is the minimum required for installation. Coordinate clearing necessary to place temporary structural BMP's with local weather forecast so that clearing and placement may be completed within a forecast dry period. Stabilize all erosion control measures after installation. Temporary Barrier Fence shall be in Place, around areas not to be disturbed, prior to any construction activities. This area includes Stream Corridor.
2. Clear and Stabilize Work Areas:
Grade contractor areas and place all-weather surface on contractor areas.
3. Clearing and Grubbing:
After Phase I BMP's are installed, contractor may clear, grub, and demo required areas as necessary.

	PROJECT STAGE	PLAN REFERENCE NUMBER	BMP DESCRIPTION	REMOVE AFTER PHASE	NOTES
Phase I	A-Prior to Construction	1	Construction Entrance	II	Install Construction Entrance
		2	Staging Area	II	Install Staging Area
		3	Perimeter Silt Fence	III	Install Silt Fence
		4	Concrete Washout	II	Install Concrete Washout as Shown on Plans Prior to Pouring Any Concrete
Phase II	B - During Land Disturbance & Storm Infrastructure Installation	5	Inlet Protection	III	Install Filter Bags Prior to Construction
Phase III	C-Final Stabilization	6	Establish Perennial Vegetation	N/A	Redistribute Topsoil and Seed and Mulch all Disturbed Area. Stabilization Complete when 100% of Disturbed Area is Established with Perennial Vegetation with a Density of 70%

NORTH
1"=20'
0 10' 20'

afernandezbeato
Aug 17 , 2023-2:24pm
Z:\RIC Design\2022\22-0111\24- Whitewater\Dwg\Sheets\CD\22-0111-24 CD-ECP-01.dwg

Construction Documents

22-0111-24
Dollar Tree
Whitewater, Waukesha County, WI

Erosion Control Plan II

NO.	DATE	REVISION

DRAWN BY AFB
CHECKED BY PNC

Renaissance Infrastructure Consulting
8653 Penrose Lane
Lenexa, Kansas 66219
913.317.9500
WWW.RIC-CONSULT.COM

WISCONSIN PATRICK N. CASSITY E-45916-6 KANSAS CITY, MO PROFESSIONAL ENGINEER

Sheet
C6.1

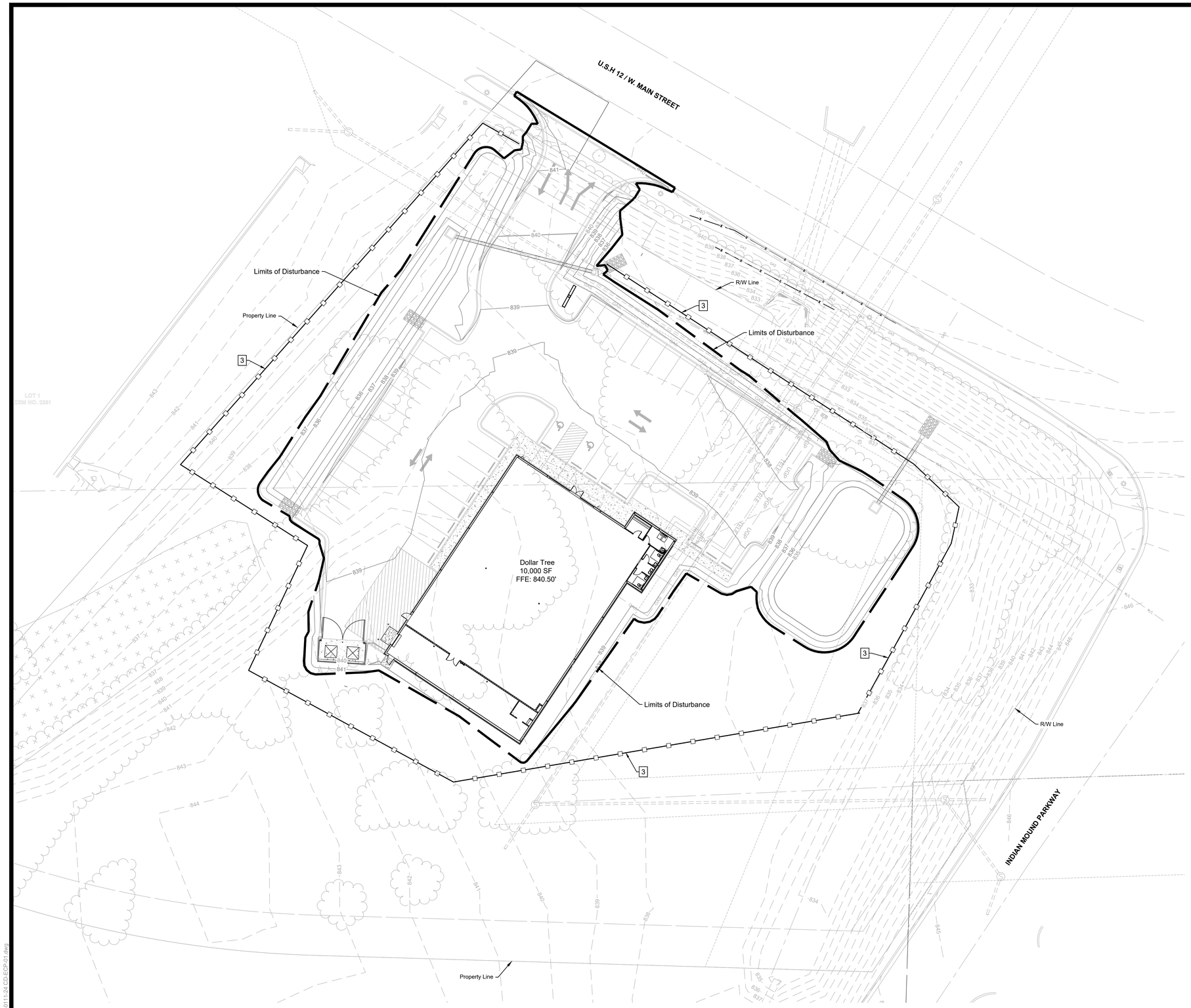

Disturbed Area for Site Improvements : 1.24 Acres

EROSION CONTROL LEGEND

- Stabilized Construction Entrance
- Staging Area
- Concrete Washout
- Limits of Disturbance
- Perimeter Silt Fence
- Inlet Protection

EROSION CONTROL NOTES

1. Erosion control plan modifications shall be required if the plan fails to substantially control erosion and offsite sedimentation.
2. The retention of access controls and sediment controls shall be required for areas where seed has not established 70% cover.
3. The contractor shall temporarily seed and mulch all disturbed areas if soil disturbing activities cease and will not resume for more than 14 days. Stabilization activities must also be completed within 14 days.
4. Install "J' Hooks on silt fence every 100 LF
5. Any location that is being accessed by vehicles needs to have a construction entrance.
6. Contractor must keep a broom on site in order to clean up mud tracked on to the streets immediately.
7. Any contractor parking that is in a disturbed area must be rocked to prevent tracking of mud.

Grading Legend

- Existing Major Contour
- Existing Minor Contour
- Proposed Major Contour
- Proposed Minor Contour

WRITTEN SEQUENCING

1. Implement Pre-Clearing Plan:
   All temporary structural BMP's shown on the pre-clearing plan must be in place before the general clearing operations. Clearing necessary to place temporary structural BMP's is the minimum required for installation. Coordinate clearing necessary to place temporary structural BMP's with local weather forecast so that clearing and placement may be completed within a forecast dry period. Stabilize all erosion control measures after installation. Temporary Barrier Fence shall be in Place, around areas not to be disturbed, prior to any construction activities. This area includes Stream Corridor.
2. Clear and Stabilize Work Areas:
   Grade contractor areas and place all-weather surface on contractor areas.
3. Clearing and Grubbing:
   After Phase I BMP's are installed, contractor may clear, grub, and demo required areas as necessary.

	PROJECT STAGE	PLAN REFERENCE NUMBER	BMP DESCRIPTION	REMOVE AFTER PHASE	NOTES
Phase I	A-Prior to Construction	1	Construction Entrance	II	Install Construction Entrance
		2	Staging Area	II	Install Staging Area
		3	Perimeter Silt Fence	III	Install Silt Fence
		4	Concrete Washout	II	Install Concrete Washout as Shown on Plans Prior to Pouring Any Concrete
Phase II	B - During Land Disturbance & Storm Infrastructure Installation	5	Inlet Protection	III	Install Filter Bags Prior to Construction
Phase III	C-Final Stabilization	6	Establish Perennial Vegetation	N/A	Redistribute Topsoil and Seed and Mulch all Disturbed Area. Stabilization Complete when 100% of Disturbed Area is Established with Perennial Vegetation with a Density of 70%

NORTH

1"=20'

0 10' 20'

Construction Documents

22-0111-24
Dollar Tree
Whitewater, Waukesha County, WI

Erosion Control Plan III

NO.	DATE	REVISION

DRAWN BY AFB | CHECKED BY PNC

Renaissance Infrastructure Consulting
8653 PENROSE LANE
LENEXA, KANSAS 66219
913.317.9590
WWW.RIC-CONSULT.COM

WISCONSIN
PATRICK N. CASSITY
E-45916-6
KANSAS CITY, MO
PROFESSIONAL ENGINEER

Sheet
C6.2

afernandezbeato
Aug 17, 2023-2:24pm
Z:\Drawings\2022\22-0111\24-Whitewater\Dwg\Sheets\CD\22-0111-24 CD-EOP-01.dwg

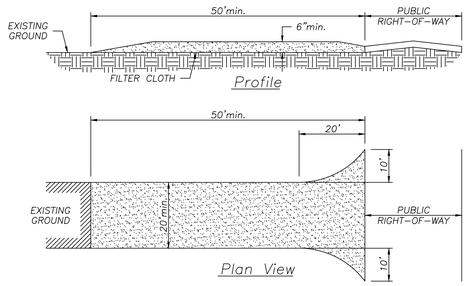

CONSTRUCTION SPECIFICATIONS:

1. STONE SIZE – USE (2) INCH STONE, OR RECLAIMED OR RECYCLED EQUIVALENT.
2. LENGTH – AS REQUIRED, BUT NOT LESS THAN (50) FEET.
3. THICKNESS – NOT LESS THAN SIX (6) INCHES.
4. WIDTH – TWENTY (20) FOOT MINIMUM, BUT NOT LESS THAN THE FULL WIDTH AT POINTS WHERE INGRESS OR EGRESS OCCURS.
5. FILTER CLOTH – WILL BE PLACED OVER THE ENTIRE AREA PRIOR TO PLACING OF STONE.
6. SURFACE WATER – ALL SURFACE WATER FLOWING OR DIVERTED TOWARD CONSTRUCTION ENTRANCES SHALL BE PIPED ACROSS THE ENTRANCE. IF PIPING IS IMPRACTICAL, A MOUNTABLE BERM WITH 3:1 SLOPES WILL BE PERMITTED.
7. MAINTENANCE – THE ENTRANCE SHALL BE MAINTAINED IN A CONDITION WHICH WILL PREVENT TRACKING OR FLOWING OF SEDIMENT ONTO PUBLIC RIGHTS-OF-WAY. THIS MAY REQUIRE PERIODIC TOP DRESSING WITH ADDITIONAL STONE AS CONDITIONS DEMAND AND REPAIR AND/OR CLEANOUT OF ANY MEASURES USED TO TRAP SEDIMENT. ALL SEDIMENT SPILLED, DROPPED, WASHED OR TRACKED ONTO PUBLIC RIGHTS-OF-WAY MUST BE REMOVED IMMEDIATELY.
8. WASHING – WHEELS SHALL BE CLEANED TO REMOVE SEDIMENT PRIOR TO ENTRANCE ONTO PUBLIC RIGHTS-OF-WAY. WHEN WASHING IS REQUIRED, IT SHALL BE DONE ON AN AREA STABILIZED WITH STONE AND WHICH DRAINS INTO AN APPROVED SEDIMENT TRAPPING DEVICE.
9. PERIODIC INSPECTION AS NEEDED MAINTENANCE SHALL BE PROVIDED AFTER EACH RAIN.

Temporary Construction Entrance

Not to Scale

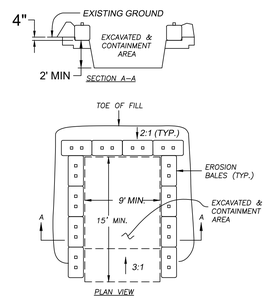

Concrete Washout

Not to Scale

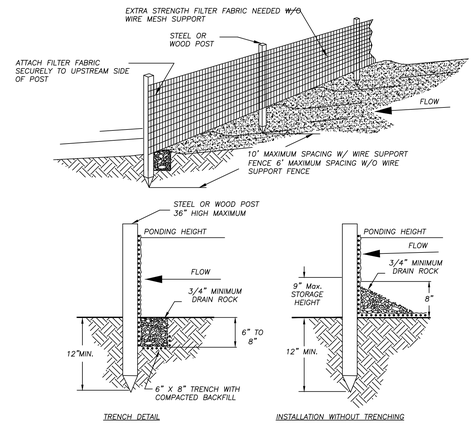

NOTES:

1. MUST BE INSTALLED PROPERLY TO AVOID NOTICE OF VIOLATION.
2. SILT FENCE SHALL BE PLACED ON SLOPE CONTOURS TO MAXIMIZE POUNDING EFFICIENCY.
3. INSPECT AND REPAIR FENCE AFTER EACH STORM EVENT AND REMOVE SEDIMENT WHEN NECESSARY. 9" MAXIMUM RECOMMENDED STORAGE HEIGHT.
4. REMOVED SEDIMENT SHALL BE DEPOSITED TO AN AREA THAT WILL NOT CONTRIBUTE TO SEDIMENT OFF-SITE AND CAN BE PERMANENTLY STABILIZED.

Filter Fabric Silt Fence

Not to Scale

Construction Documents

22-0111-24
Dollar Tree
Whitewater, Waukesha County, WI

Erosion Control Details

NO.	DATE	REVISION

DRAWN BY	CHECKED BY
AFB	PNC

Renaissance Infrastructure Consulting
913.317.9500
WWW.RICCONSULT.COM
8653 PENROSE LANE
LENEXA, KANSAS 66219

WISCONSIN
PATRICK N. CASSITY
E-45916-6
KANSAS CITY, MO
PROFESSIONAL ENGINEER

Sheet
C6.3

afernandezbeato
Aug 17, 2023-2:24pm
Z:\2022\Projects\22-0111-24- Whitewater\Dwg\Sheets\CD\22-0111-24 CD-ECP-01.dwg

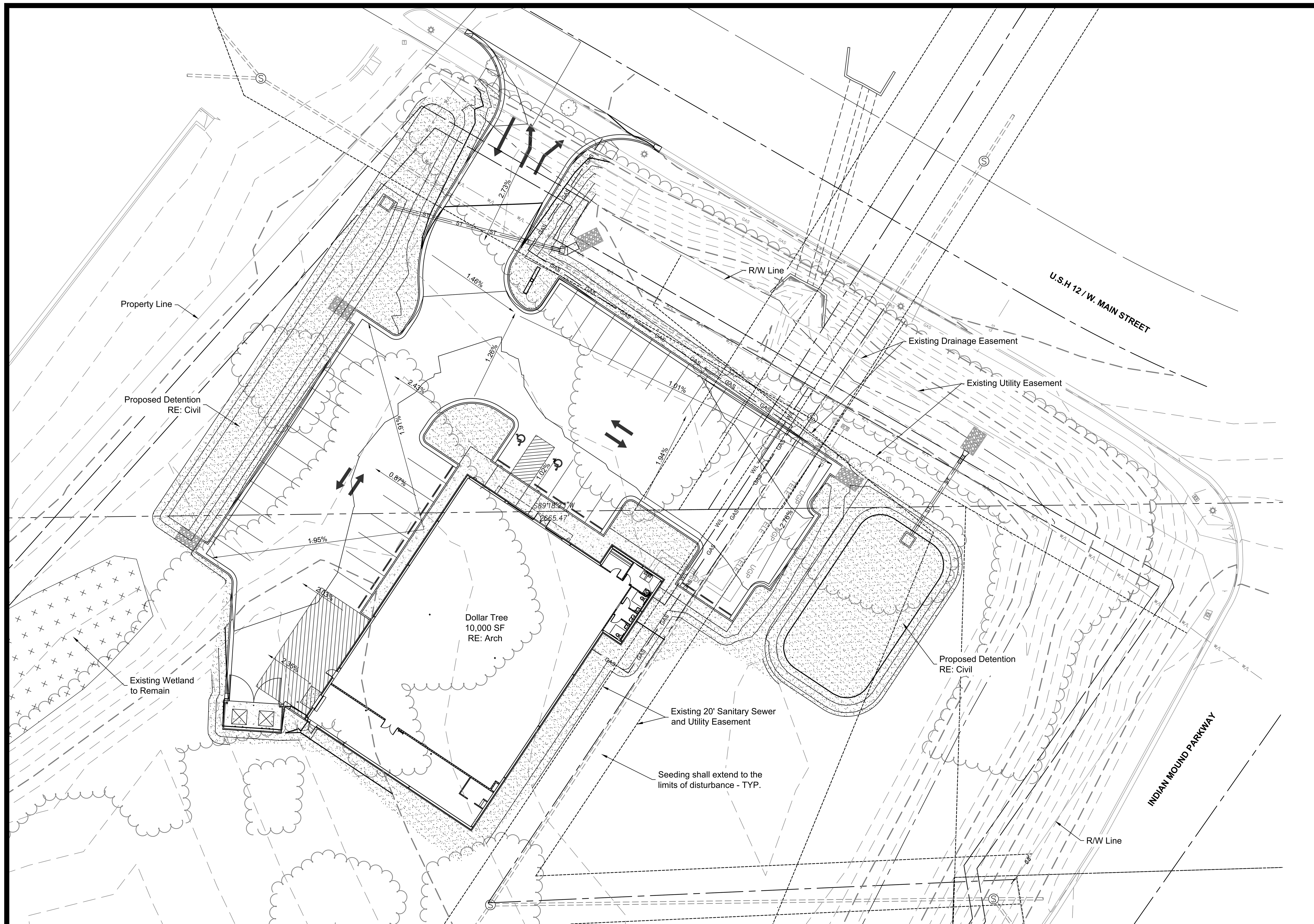

SEEDING NOTES

1. SEEDING SHALL OCCUR AS REQUIRED BY THE SPECIFICATIONS. SEEDING AT OTHER TIMES WILL REQUIRE A COVER CROP APPROVED BY THE ENGINEER AND CITY CODE. DORMANT SEEDING SHALL BE APPROVED BY THE ENGINEER.
2. GRADED AREAS SHALL PROVIDE A SMOOTH UNIFORM SLOPE, FREE FROM RILLS AND GULLEYS.
3. THE TOP FOUR INCHES OF SOIL SHALL BE FERTILE SOIL SUITABLE FOR SEED GROWTH.
4. PRIOR TO APPLICATION OF SEED, CONTRACTOR SHALL LOOSEN ALL SOILS TO A DEPTH OF ONE INCH. THE AREA SHALL BE RAKED FREE OF ALL ROCKS AND DEBRIS ACCORDING TO THE SPECIFICATION.
5. ALL AREAS TO BE SEEDED LOCATED ON SLOPES STEEPER THAN 4:1 (H:V) SHALL USE SPECIFIED TURF REINFORCEMENT MAT. ALL TRM SHOWN ON THE PLANS SHALL BE CONSIDERED CONCEPTUAL, CONTRACTOR TO VERIFY AND INSTALL ON ALL SLOPES EXCEEDING 4:1 AFTER FINAL GRADING IS ESTABLISHED.
6. ALL SEEDED ARES SHALL BE DRAGGED OR RAKED BEFORE BEING COVERED WITH THE SPECIFIED TRM. MAT SHALL BE PLACED PRIOR TO EXPOSURE TO ADVERSE WEATHER.
7. THE CONTRACTOR MUST PROVIDE THE OWNER'S REPRESENTATIVE DOCUMENTATION FROM THE SUPPLIER THAT EACH LOT OF SEED MEETS OR EXCEEDS THE SPECIFIED STANDARD.
8. ALL SEED MUST BE TESTED BY A REGISTERED SEED TECHNOLOGIST PER AOSA METHODS AND MEET ALL REQUIREMENTS ESTABLISHED BY THE STATE DEPARTMENT OF AGRICULTURE.
9. AFTER COMPLETION OF WORK, CONTRACTOR SHALL WATER SEEDED AREAS DAILY. SATURATING THE MAT AND UNDERLYING SEED BED. CONTRACTOR SHALL CONTINUE WATERING UNTIL PLANT ESTABLISHMENT HAS OCCURRED OR BY NOTIFICATION FROM LANDSCAPE ARCHITECT. NOT WATERING DUE TO RAIN EVENT SHALL BE DOCUMENTED AND APPROVED BY THE GENERAL CONTRACTOR. WATERING LOGS SHALL BE SUPPLIED TO THE OWNER OR ENGINEER.
10. CONTRACTOR SHALL PROVIDE AN AUTOMATIC IRRIGATION SYSTEM FOR ALL SEEDED AREAS PER THE OWNER'S DIRECTION. CONTRACTOR SHALL SUBMIT SHOP DRAWING OF PROPOSED IRRIGATION SYSTEM & COVERAGE AREAS FOR OWNER APPROVAL PRIOR TO INSTALLATION. IRRIGATION SYSTEM SHALL PROVIDE FOR THE CONTROLLER, WEATHER SENSOR, AND REQUIRED BACKFLOW DEVICES PER STATE AND LOCAL CODES.

PLANT SCHEDULE

GROUND COVERS	BOTANICAL / COMMON NAME	CONT	SPACING	QTY
	Turfgrass Seed Tall Fescue Seed / Fescue Seed	SEED		20,157 sf

1"=20'
0 10' 20'

SECTION 329200 - LAWNS

PART 1 - GENERAL

1.1 SUMMARY

A. This Section includes the following areas of Work:
1. Fine grading and preparing lawn areas.
2. Furnishing and applying topsoil.
3. Furnishing and applying limited soil amendments.
4. Sodding new lawn areas.
5. Reconditioning existing lawn areas.
6. Replanting unsatisfactory or damaged lawns.
7. Maintenance.

B. Related Work Specified Elsewhere:
1. Trees and Shrubs: SECTION 329300

1.2 REFERENCES

A. Applicable Standards:
1. American Society for Testing and Materials (ASTM) - Equivalent AASHTO standards may be substituted as approved.

1.3 SUBMITTALS

A. Certification of each seed mixture for sod, identifying the sod source, including name and telephone number of supplier. Seed for sod must be sod quality and is to be gold tag standards with 0% other crop seed and 0% weed seed.
B. Certification of each seed type for Native Grass mixture identifying the seed source, including name and telephone number of supplier.
C. Engineer has final approval of seed grower, no exceptions.
D. Qualification data for firms and persons specified in the "Quality Assurance" Article to demonstrate their capabilities and experience. Include lists of completed projects with project names and addresses, names and address of architects and owners, and other information specified.
E. Material test reports from qualified independent testing agency indicating and interpreting test results relative to compliance of the following materials with requirements indicated.
1. Agronomic and biological analysis of existing surface soil.
2. Agronomic and biological analysis of all imported topsoil.
F. Maintenance instructions recommending procedures to be performed by Owner for maintenance of landscaping during an entire year. Submit before expiration of required maintenance periods.

1.4 QUALITY ASSURANCE

A. Qualifications: A qualified subcontractor shall employ or provide a qualified installation manager who meets any or all of the required qualifications;
1. Bachelor of Science Degree in Horticulture, Botany, Soil Physics, Agronomy, General Agriculture, Agricultural or Biological Engineering, or a related field.
2. An individual with field experience as approved by the Landscape Architect or Registered Engineer.
B. Installer Qualifications: Engage an experienced Installer who has completed landscaping work similar in material, design, and extent to that indicated for this Project and with a record of successful turf establishment.
1. Installer's Field Supervision: Require Installer to maintain an experienced full-time supervisor on the Project site during times that turf planting is in progress.
C. Testing Agency Qualifications: To qualify for acceptance, an independent testing agency must demonstrate to Landscape Architect's satisfaction, based on evaluation of agency-submitted criteria conforming to ASTM E 699, that it has the experience and capability to satisfactorily conduct the testing indicated without delaying the Work.
D. Topsoil Analysis: Furnish a soil analysis made by a qualified independent soil-testing agency stating percentages of organic matter by Loss on ignition, inorganic matter (proportion of silt, clay, and sand), deleterious material including biological contamination, pH, mineral and plant-nutrient content of topsoil, and cationic exchange capacity.
1. Report suitability of topsoil for grass growth from horticulturist. State recommended quantities of nitrogen, phosphorus, and potash nutrients and any limestone, aluminum sulfate, or other soil amendments to be added to produce satisfactory topsoil.

1.5 DELIVERY, STORAGE AND HANDLING

A. Sod: Harvest, deliver, store, and handle sod according to the requirements of the Turfgrass Producers International (TPI) "Specifications for Turfgrass Sod Materials and Transplanting/Installing."
B. Native Seed: Delilver packaged materials in containers showing weight, analysis and name of manufacturer. Protect materials from deterioration during delivery and while stored at site.

1.6 COORDINATION AND SCHEDULING

A. Planting Season: Install seed during normal planting seasons for type of lawn work required. Correlate planting with specified maintenance periods to provide required maintenance from date of Substantial Completion.
B. Weather Limitations: Proceed with work only when existing and forecast weather conditions are suitable for work.

1.7 MAINTENANCE

A. Lawns/turf areas: Begin maintenance of turfgrass immediately after each area is planted and continue until acceptable establishment, but for no less than the following periods:
1. Seeded Lawns: 90 days after date of Substantial Completion.
B. Maintain and establish lawns by watering, fertilizing, weeding, mowing, trimming, replanting and other operations per this Specification.
C. Watering- Subcontractor shall be responsible of watering the sod as required by this Specification. Subcontractor may use irrigation system to accomplish watering. Subcontractor shall be responsible for coordinating with irrigation contractor for scheduling of irrigation system to provide required water needs.
D. Post-fertilization: Apply fertilizer to lawn after first mowing and when grass is dry.

PART 2 - PRODUCTS

2.1 TOPSOIL

A. Standard Topsoil: ASTM 5268, pH range 5.5 to 7. Free of stones 1 inch or larger in any dimension, and other extraneous materials harmful to plant growth.
1. Topsoil Source: Reuse surface soil stockpiled on the site where available. Verify suitability of surface soil to produce topsoil meeting requirements and amend when necessary. Supplement with imported topsoil when quantities are insufficient. Imported topsoil shall meet the requirements of this specification for composition. Clean all topsoil of roots, plants, sods, stones, clay lumps, and other extraneous materials harmful to plant growth.

2.2 LIMITED SOIL AMENDMENTS

A. Herbicides: EPA registered and approved, of type recommended by manufacturer and approved by the Landscape Architect.
B. Compost: Well-composted, stable and weed-free organic matter, pH range of 5.5-8; moisture content 35-55 percent by weight; 100 percent passing through 3/4-inch sieve; soluble salt content less than 4 decisiemens/m; not exceeding 0.5 percent inert contaminants and free of substances toxic to plantings.
C. Water: Potable.

2.3 GRASS SEED:

A. Provide fresh, clean, new crop seed complying with tolerance for purity and germination established by Official Seed Analysts of North America and as required below.
B. Be labeled according to the U.S. Department of Agriculture Federal Seed Act and shall be furnished in containers with tags showing seed mixture, purity, germination, weed content, name of seller, and date on which seed was tested.
C. Seed Mix: 10% Bluegrass & 90% Turf-Type Tall Fescue, composed of an equal mix of three or four compatible species of bluegrass and one or two species of fescue. The mixture shall not include any varieties of the slower growing "Dwarf" fescue types.
1. Fescue Varieties, or approved equal
Apache, Arid, Austin, Bonanza, Carefree, Cheiftan, Cimmaron, Cochise, Falcon, Guardian, Houndog, Jaguar II, Maverick II, Mustang, Olympic, Phoenix, Rebel II, Rebel 3D, Safari, Shenandoah, Thoroughbred, Titan, Tribute, Vegas
2. Bluegrass Varieties, or approved equal
a. Asset, Kenblue, Midnight, Nassau, Ruby II, Troy
3. Moldy seed or seed that has been damaged in storage shall not be used.
4. All seed shall be hulled and/or coated for optimum growth performance and quicker establishment.
5. Landscape Architect shall have final approval of all seed blends and mixtures.
D. Cover Crop: As approved by Landscape Architect, Contractor shall submit mix for approval.

2.4 FERTILIZER

A. Post Seeding Commercial fertilizer of neutral character, with some elements derived from organic sources, containing not less than 1 lbs. of actual nitrogen per 1,000 square feet of lawn area. Fertilizer shall be applied per manufacturers recommendations.
B. Commercial Starter Fertilizer: Prior to the use of a starter fertilizer, the contractor shall perform a soil test and amend soil as required to ensure optimum growth performance. Starter fertilizer shall be applied per manufacturers recommendations
C. Deliver to site in labeled bags or containers.

2.5 MYCORRHIZAL INOCULANT

A. The Subcontractor shall utilize an organic, mycorrhizal inoculant for soil prep. The material shall be granular and applied per manufacturer's recommendation. M-Roots w/ Mycorrhiza or approved equal. For exact finish, insert names of coating manufacturers and products.

2.6 STRAW MAT

A. Provide a biodegradable single net, two sided organic straw mat with functional longevity of 10-12 months by Greenfix Amerca, Product WS072 Double Net Straw or Approved Equal.
B. Utilize Straw Mat for dormant seeding and on slopes greater than 4:1 .

PART 3 - EXECUTION

3.1 EXAMINATION

A. Examine areas to receive lawns for compliance with requirements and for conditions affecting performance of work of this Section. Do not proceed with installation until unsatisfactory conditions have been corrected.

3.2 PREPARATION

A. Protect structures, utilities, sidewalks, pavements, and other facilities, trees, shrubs, and plantings from damage caused by planting operations.
B. Provide erosion-control measures to prevent erosion or displacement of soils and discharge of soil-bearing water runoff or airborne dust to adjacent properties and walkways.

3.3 SOIL PREPARATION

A. Dispose of any growth, rocks, or other obstructions which might interfere with tilling, seeding, sodding, or later maintenance operations. Remove stones over 38 mm (1_1/2 inches) in any dimension and sticks, roots, rubbish, and other extraneous matter.
B. Thoroughly loosen and pulverize topsoil to a depth of at least 100 mm (4 inches) for all standard turfgrass areas.
C. Grade lawn areas to a smooth, even surface with loose, uniformly fine texture. Roll and rake, remove ridges and fill depressions to meet finish grades. Limit fine grading to areas which can be planted within immediate future.
D. Moisten prepared lawn areas before planting if soil is dry. Water thoroughly and allow surface to dry off before planting of lawns. Do not create a muddy soil condition.
E. Restore prepared areas to specified condition if eroded or otherwise disturbed after fine grading and prior to planting.
F. Spread top soil mixture to depth required to meet thickness, grades, and elevations indicated after light rolling and natural settlement.
G. Allow for sod thickness in areas to be sodded.
H. Preparation of Unchanged Grades: Where lawns are to be planted in areas that have not been altered or disturbed by excavation, grading, or stripping operations, prepare soil for lawn planting as follows:
1. Remove and dispose of existing grass, vegetation, and turf. Do not turn over into soil being prepared for lawns.
2. Till surface soil to a depth of at least 6 inches. Apply required soil amendments and initial fertilizers and mix thoroughly into top 4 inches of soil. Trim high areas and fill in depressions. Till soil to a homogenous mixture of fine texture.
3. Clean surface soil of roots, plants, sod, stones, clay lumps, and other extraneous materials harmful to plant growth.
4. Remove waste material, including grass, vegetation, and turf, and legally dispose of it off the Owner's property.

3.4 SEEDING NEW LAWNS:

A. Do not use wet seed or seed which is moldy or otherwise damaged in transit or storage.
B. Sow seed with a Brillion type seeding machine or where applicable and restricted by steep slopes or other areas not accessible to the seeding machine, broadcast or drop seed methods may be used. Do not broadcast or drop seed when wind velocity exceeds 5 mph. Evenly distribute seed by sowing equal quantities in 2 directions at right angles to each other, and 3 directions in high maintenance areas, as directed by the Engineer.
C. Sow not less than rate of 8 pounds per 1,000 square feet.
D. Rake seed lightly into top 1/8_inch of soil, roll lightly, and water with fine spray.
E. Protect seeded slopes exceeding 1:4 against erosion with erosion-control blankets installed and stapled according to manufacturer's recommendations.
F. Protect seeded areas with slopes less than 1:4 against erosion by spreading mulch as specified after completion of seeding operations. Spread uniformly to form a continuous blanket over seeded areas. Spread by hand, blower, or other suitable equipment.
G. Seasonal Limitations:
1. Perform seeding only during the following seasons:
a. Recommend seeding when temperatures ranging from 50 degrees Fahrenheit to 70 degrees Fahrenheit for a minimum 6 week period.
J. Methods of Application:
1. Dry Seeding: Spreader or seeding machine.
2. Hydroseeding: Mix seed, fertilizer and pulverized mulch with water and constantly agitate. Do not add seed to water more than 4 hours before application:
a. On slopes of 2 horizontal to 1 vertical or flatter, apply seed separately from fertilizer. Cover seed with soil to an average depth of 13 mm (1/2_inch) by raking or other approved methods.
b. On slopes steeper than 2 horizontal to 1 vertical, seed and fertilizer may be applied in a single operation. Incorporation into the soil will not be required.

3.5 RECONDITIONING LAWNS:

A. Recondition lawn areas damaged by construction operations, including storage of materials or equipment and movement of vehicles. Also recondition lawn areas where settlement or washouts occur or where minor regrading is required. Recondition other existing lawn areas where indicated.
B. Provide fertilizer, sod, and soil amendments as specified for new lawns and as required to provide satisfactorily reconditioned lawn. Provide new planting soil as required to fill low spots and meet new finish grades.
C. Cultivate bare and compacted areas thoroughly to provide a good, deep planting bed.
D. Remove diseased or unsatisfactory lawn areas; do not bury into soil. Remove topsoil containing foreign materials resulting from Subcontractor's operations including oil drippings, stone, gravel, and other construction materials. Replace with new topsoil.
E. Where substantial lawn remains (but is thin), mow, rake, aerate if compacted, fill low spots, remove humps and cultivate soil, fertilize, and seed at a rate of 0.5 lbs per 1,000 SF. Remove weeds before seeding or, if extensive, apply selective chemical weed killers as required. Apply a seed-bed mulch, if required, to maintain moist condition.
F. Water newly planted areas and keep moist until new grass is established.

3.6 PROTECTION:

A. Erect barricades and warning signs as required to protect newly planted areas from traffic. Maintain barricades throughout maintenance period until lawn is established.

3.9 MAINTENANCE:

A. Mow established grass to a shorter height (0.5 inches) prior to spring growth to remove dead leaf blades and debris.
B. Mow grass to height of 0.5 to 1.5 inches as soon as there is enough top growth to cut with mower. Remove no more than 30% of grass leaf growth in initial or subsequent mowings. Do not delay mowing until grass blades bend over and become matted.
C. Remove weeds by pulling or chemical treatment. Preemergent herbicide shall not be applied to establishing stands.
D. Perform maintenance throughout the 90 day maintenance period.
E. Seeded Areas:
1. Thoroughly water seeded areas daily to keep seeds moist until germination. After seeds have germinated, continue watering daily until the first mowing. Watering shall be in amounts enough to wet seeds and surrounding soil, but not cause erosion or disposition of seeds.
2. Repair any portion of the seeded surface which becomes gullied or otherwise damaged. Reseed as required.
E. Apply second fertilizer application after first mowing and when grass is dry. Use fertilizer which will provide not less than 1 lbs of actual nitrogen per 1,000 square feet of lawn area.

3.10 ACCEPTANCE OF LAWNS:

A. When lawn Work is Substantially Complete, including maintenance, Landscape Architect and Owner will, upon request, make an inspection to determine acceptability:
1. Lawn Work may be inspected for acceptance in parts agreeable to Owner, provided Work offered for inspection is complete, including maintenance.
2. An Acceptable stand of grass shall be considered when there is a minimum of 95% ground coverage with no bare spots greater than 12" Square.
B. Replant rejected work and continue specified maintenance until re-inspected by Landscape Architect and Owner and found to be acceptable.

3.11 CLEANUP:

A. Promptly remove soil and debris created by lawn Work from paved areas. Clean wheels of vehicles prior to leaving Site to avoid tracking soil onto surfacing of roads, walks, or other paved areas.

END OF SECTION 329200

Construction Documents

22-0111-24
Dollar Tree
Whitewater, Waukesha County, WI

Seeding Plan

NO.	DATE	REVISION

DRAWN BY	CHECKED BY
AFB	PNC

Renaissance Infrastructure Consulting
8653 Penrose Lane
Lenexa, Kansas 66219
913.317.9500
WWW.RIC-CONSULT.COM
WI Certificate of Authority: R068918

WISCONSIN PATRICK N. CASSITY E-45916-6 KANSAS CITY, MO PROFESSIONAL ENGINEER

Sheet
C6.4

afernandezbeato
Aug 17 , 2023-2:24pm
Z:\RIC Design\2022\22-0111\24- Whitewater\Dwg\Sheets\CD\22-0111-24 CD-LND-01.dwg

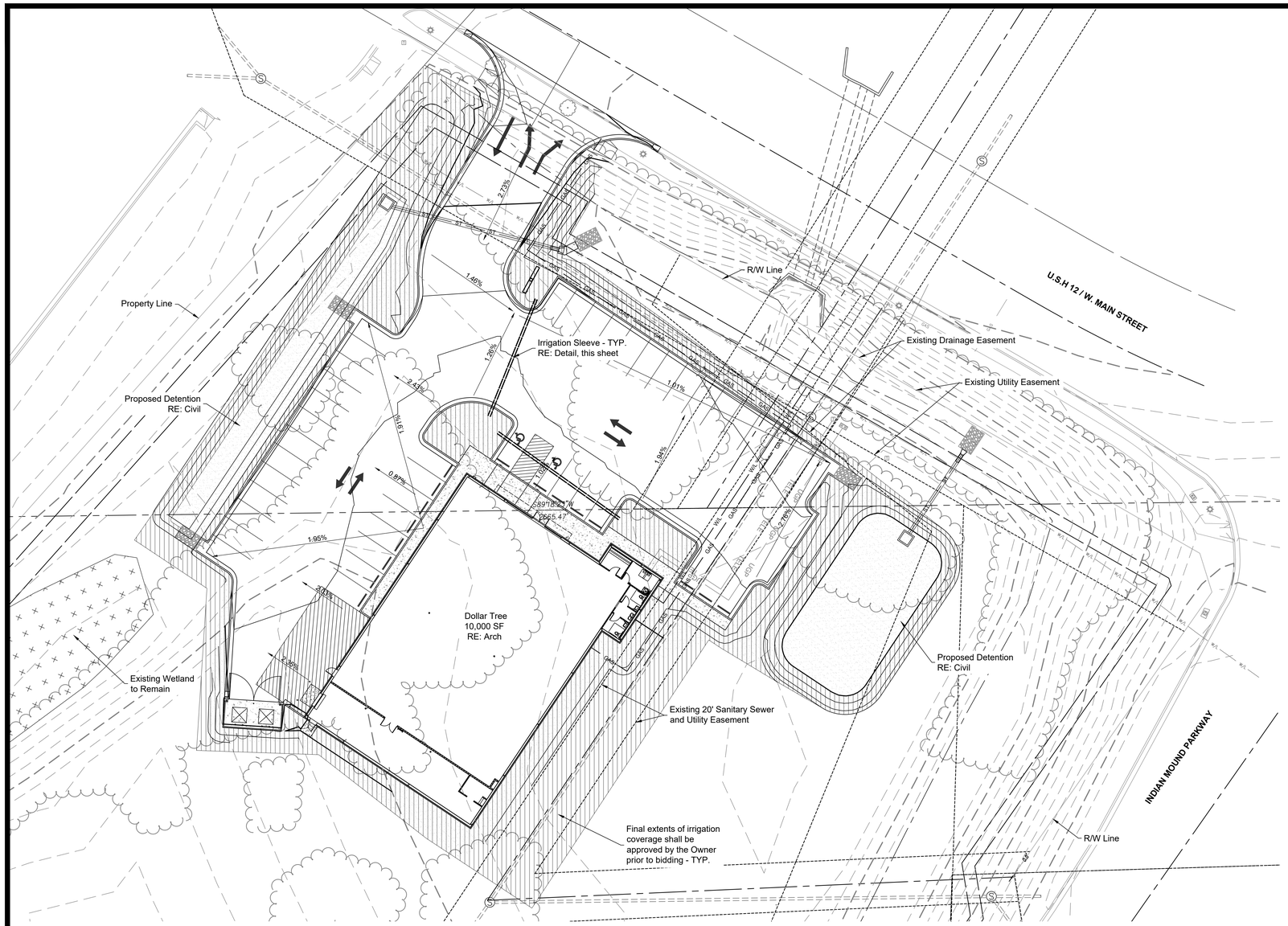

IRRIGATION NOTES

1. IRRIGATION SHALL BE PROVIDED THROUGHOUT THE LIMITS SHOWN.
2. IRRIGATION CONTRACTOR IS RESPONSIBLE FOR VERIFYING LOCATION OF ALL UTILITIES AND MAKING NECESSARY ADJUSTMENTS TO THE IRRIGATION SYSTEM TO ACCOMMODATE THE INFRASTRUCTURE.
3. IRRIGATION CONTRACTOR SHALL COORDINATE SLEEVE INSTALLATION TO OCCUR PRIOR TO CONSTRUCTION OF PAVEMENT, WALL OR OTHER SURFACE IMPROVEMENTS.
4. IRRIGATION CONTRACTOR SHALL DESIGN AND PROVIDE A WORKING IRRIGATION SYSTEM BASED ON THE AVAILABLE PRESSURE. IT SHALL BE THE RESPONSIBILITY OF THE IRRIGATION CONTRACTOR TO VERIFY AVAILABLE PRESSURE PRIOR TO SYSTEM DESIGN. IRRIGATION SYSTEM SHALL BE COMPLETE IN EVERY RESPECT AND READY FOR OPERATION AS SATISFACTORY TO CONTRACT.
5. IRRIGATION PIPING FLOW VELOCITY SHALL NOT EXCEED 5 FEET PER SECOND.
6. IRRIGATION SYSTEM STATIC PRESSURE RANGE SHALL NOT VARY BY MORE THAN 10%.
7. IRRIGATION CONTRACTOR SHALL DESIGN SYSTEM LATERAL PIPING TO LIMIT PRESSURE DROPS TO LESS THAN 20% OF THE AVERAGE SPRINKLER OPERATING PRESSURE.
8. IRRIGATION CONTRACTOR SHALL INSTALL HEADS AND NOZZLE TYPES OF THE SAME MANUFACTURER AND PRESSURE RATING WITHIN THE SAME IRRIGATION ZONE.
9. IRRIGATION CONTRACTOR SHALL ZONE THE IRRIGATION SYSTEM ACCORDING TO MICROCLIMATES AND PLANT WATER REQUIREMENTS. ZONE TURF, TREE AND PLANT BED AREAS SEPARATELY.
10. DESIGN IRRIGATION SYSTEMS TO AVOID OVER SPRAY, AVOID SPRAY BLOCKAGE FROM ADJACENT ABOVE GROUND UTILITIES AND AVOID MISTING FROM EXCESSIVE PRESSURE.
11. IRRIGATION CONTRACTOR SHALL DESIGN ALL SPRINKLER LAYOUTS FOR OVERLAPPING HEAD TO HEAD COVERAGE. DESIGN ALL SPRINKLER LAYOUTS AT 45% OF MANUFACTURER DIAMETER.
12. IRRIGATION CONTRACTOR SHALL PROVIDE QUICK COUPLER VALVES ALONG THE MAINLINE AT 200' ON-CENTER. QUICK COUPLER VALVES SHALL BE PLACED ON A SINGLE SEPARATE ZONE.
13. IRRIGATION CONTRACTOR SHALL PROVIDE FOR A MASTER CONTROL VALVE
14. IRRIGATION CONTRACTOR SHALL BE RESPONSIBLE FOR LOCATING AND INSTALLING POC, BACKFLOW DEVICE AND GATE VALVES.
15. WHEN EXISTING IRRIGATION SYSTEM IS PRESENT, IRRIGATION CONTRACTOR SHALL MODIFY EXISTING SPRINKLER HEADS & NOZZELS TO AVOID OVERSPRAY ONTO NEW CONSTRUCTION. REPOSITION EXISTING HEADS AS NECESSARY TO ACHIEVE HEAD TO HEAD COVERAGE.
16. IRRIGATION CONTRACTOR SHALL DESIGN THE IRRIGATION SYSTEM SO THAT PRECIPITATION RATES DO NOT EXCEED INFILTRATION RATES.
17. IRRIGATION CONTRACTOR TO PROVIDE A MINIMUM OF TWO SPARE CONTROL WIRES TO ALL REMOTE MAINLINE LEGS.
18. IRRIGATION CONTRACTOR SHALL DESIGN MAINLINE FLOW BASED UPON THE LARGEST ZONE GPM COMBINED WITH A SINGLE QUICK COUPLER AT 20 GPM. DESIGN ZONES FOR FULL RATED WORKING PRESSURE FOR THE SELECTED WATER DELIVERY MEDIA WITH AT LEAST ONE QUICK COUPLER AT 20 GPM OPERATING SIMULTANEOUSLY.
19. LOCATE VALVE BOXES, VALVES AND QUICK COUPLER VALVES IN BEDS AND TURF AREAS AT LEAST 36 INCHES FROM HARDSCAPE EDGES.
20. WHEN EXISTING IRRIGATION SYSTEM IS PRESENT, IRRIGATION CONTRACTOR SHALL VERIFY CONDITION OF EXISTING SYSTEM PRIOR TO BIDDING. IRRIGATION CONTRACTOR SHALL BE RESPONSIBLE FOR CONNECTIONS TO EXISTING SYSTEM AND SHALL PROVIDE FOR A WORKING SYSTEM FOR BOTH NEW AND EXISTING WITHIN THE LIMITS OF WORK.
21. IRRIGATION CONTRACTOR SHALL PROVIDE AN AUTOMATIC CONTROLLER WITH ENOUGH ZONES TO ADEQUATELY COVER ALL PROPOSED ZONES & A MINIMUM OF 20% ADDITIONAL ZONES FOR FUTURE EXPANSIONS. CONTROLLER SHALL BE CAPABLE OF UTILIZING A RAIN SENSOR.
22. IRRIGATION CONTRACTOR SHALL PROVIDE A RAIN SENSOR FOR AUTOMATIC SHUT OFF.
23. IRRIGATION CONTRACTOR SHALL PROVIDE SYSTEM DESIGN DRAWINGS SHOWING ALL WORK PROPOSED PRIOR TO CONSTRUCTION, FOR OWNER APPROVAL.
24. IRRIGATION CONTRACTOR SHALL DOCUMENT FINAL LAYOUT OF BOTH NEW AND EXISTING IRRIGATION SYSTEMS IN AN AS-BUILT DRAWING AND SUBMIT TO OWNER FOR FINAL RECORD.
25. DRAWINGS AND SPECIFICATIONS DO NOT INDICATE OR DESCRIBE TOTAL WORK REQUIRED FOR COMPLETION OF WORK AND MAY NOT COVER SOME CONDITIONS WHICH MAY BE REQUIRED. CONTRACTOR SHALL BE RESPONSIBLE TO PROVIDE A WORKING IRRIGATION SYSTEM TO SUSTAIN PLANT LIFE PER SITE CONDITIONS.

LEGEND

Spray Irrigation Area

Irrigation Sleeve

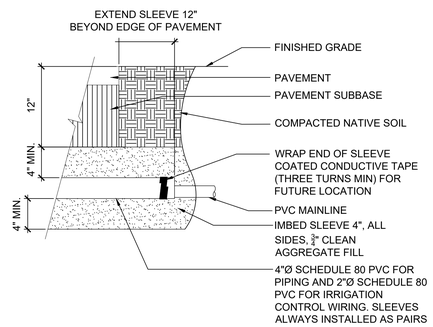

IRRIGATION SLEEVE DETAIL - NTS

SLEEVE NOTES

1. IRRIGATION SLEEVES SHALL BE INSTALLED AS A PAIR OF SLEEVES AT EACH LOCATION AND SHALL BE INSTALLED BENEATH PROPOSED ROADWAY AND PARKING AREAS PRIOR TO BEGINNING SURFACE CONSTRUCTION.

2. PIPE SLEEVE TO BE 4"Ø SCHEDULE 80 PVC FOR PIPING AND 2"Ø SCHEDULE 80 PVC FOR IRRIGATION CONTROL WIRING.

3. IMBED PIPE 4", ALL SIDES, WITH 3/4" CLEAN AGGREGATE FILL. ALLOW 48 HOURS TO SETTLE; BACKFILL & COMPACT WITH NATIVE SOIL.

4. MINIMUM TRENCH WIDTH TO BE 12".

5. CONTRACTOR SHALL INSTALL IRRIGATION SLEEVES IN ACCORDANCE WITH APPLICABLE MISSOURI PLUMBING CODES AND JOPLIN LOCAL UTILITY AND WATER MANAGEMENT DISTRICT REGULATIONS.

6. CONTRACTOR SHALL MARK ALL SLEEVE LOCATIONS AT EACH END TO AID FUTURE IRRIGATION INSTALLATION. CONTRACTOR SHALL BE RESPONSIBLE FOR DOCUMENTING AND MAINTAINING ALL SLEEVE LOCATIONS AND MARKERS DURING THE CONSTRUCTION PERIOD.

7. COATED CONDUCTIVE TAPE SHALL BE INSTALLED DIRECTLY ABOVE THE SLEEVE AND SHALL BE PRE-PRINTED WITH REPEATED WARNINGS: "CAUTION WATER LINE BURIED BELOW", OR AS OTHERWISE APPROVED BY THE PROJECT ENGINEER.

8. SLEEVES ARE ALWAYS INSTALLED AS A PAIR.

NORTH

1"=20'

0 10' 20'

Construction Documents

22-0111-24
Dollar Tree
Whitewater, Waukesha County, WI

Irrigation Coverage Plan

NO.	DATE	REVISION

DRAWN BY AFB | CHECKED BY PNC

Renaissance Infrastructure Consulting
913.317.9500
www.ric-consul.com
8653 Penrose Lane
Lenexa, Kansas 66219
WI Certificate of Authority: R068918

WISCONSIN PATRICK N. CASSITY E-45916-6 KANSAS CITY, MO PROFESSIONAL ENGINEER

Sheet
C6.5

afernandezbeato
Aug 17, 2023-2:25pm
Z:\Projects\D\22-0111-24 Whitewater\Dwg\Sheets\CD\22-0111-24 CD-J-ND-01.dwg

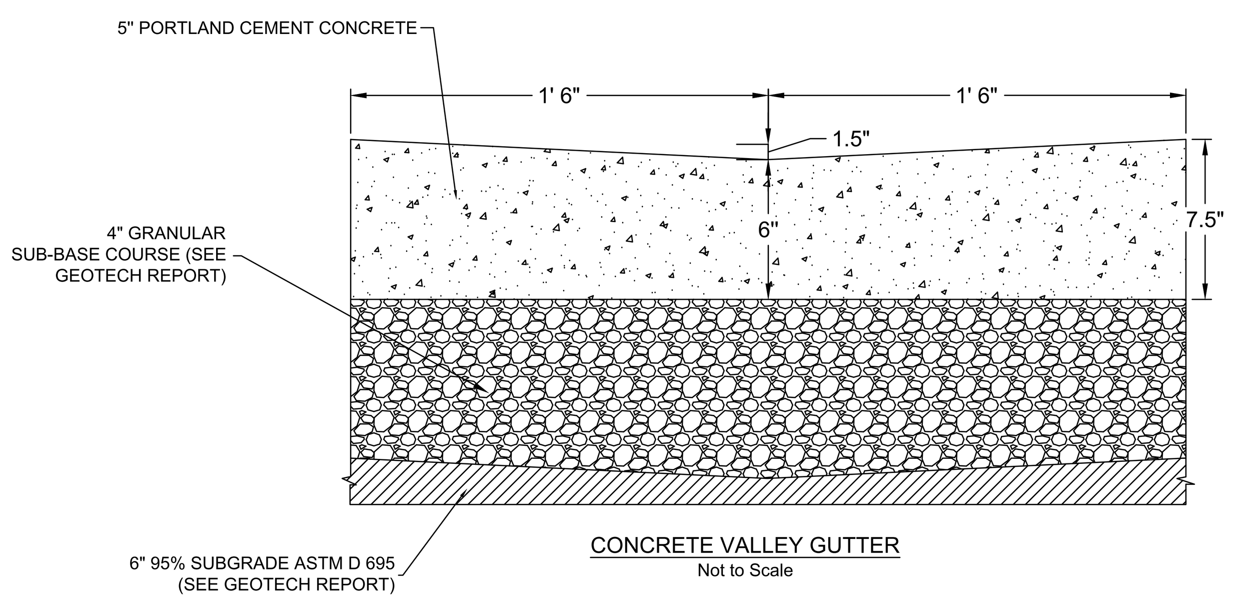

CONCRETE VALLEY GUTTER
Not to Scale

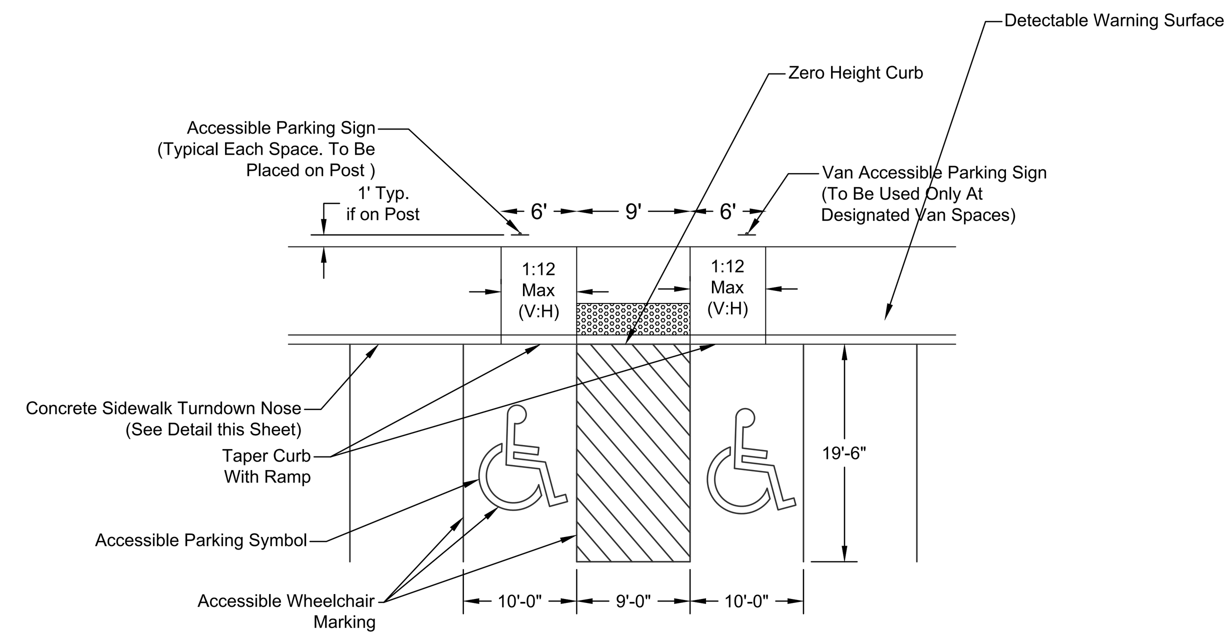

Note:
Accessible Parking Symbol and Signage Shall Comply with the Applicable Recommendations of the Manual of Uniform Traffic Control Devices (MUTCD)

ACCESSIBLE PARKING DETAIL
Not to Scale

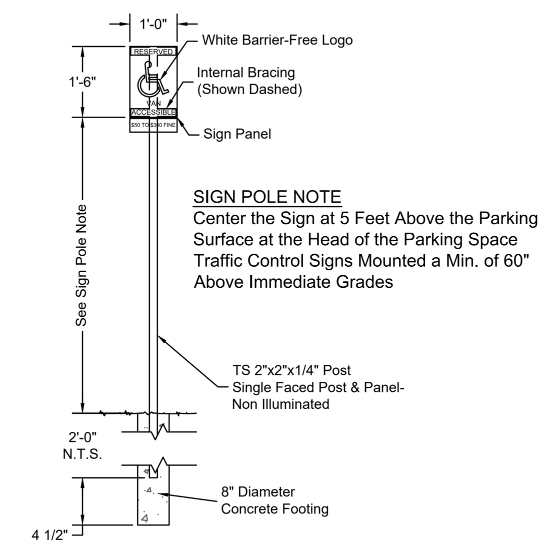

SIGN POLE NOTE
Center the Sign at 5 Feet Above the Parking Surface at the Head of the Parking Space Traffic Control Signs Mounted a Min. of 60" Above Immediate Grades

HANDICAP SIGNAGE
Not to Scale

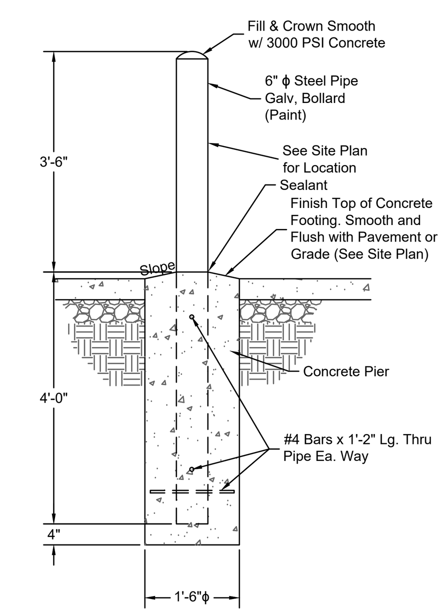

BOLLARD DETAIL
Not to Scale

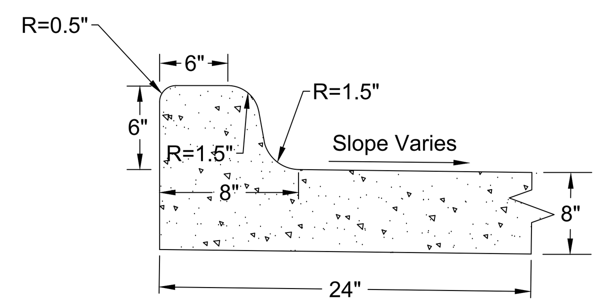

CURB & GUTTER DETAIL
Not to Scale

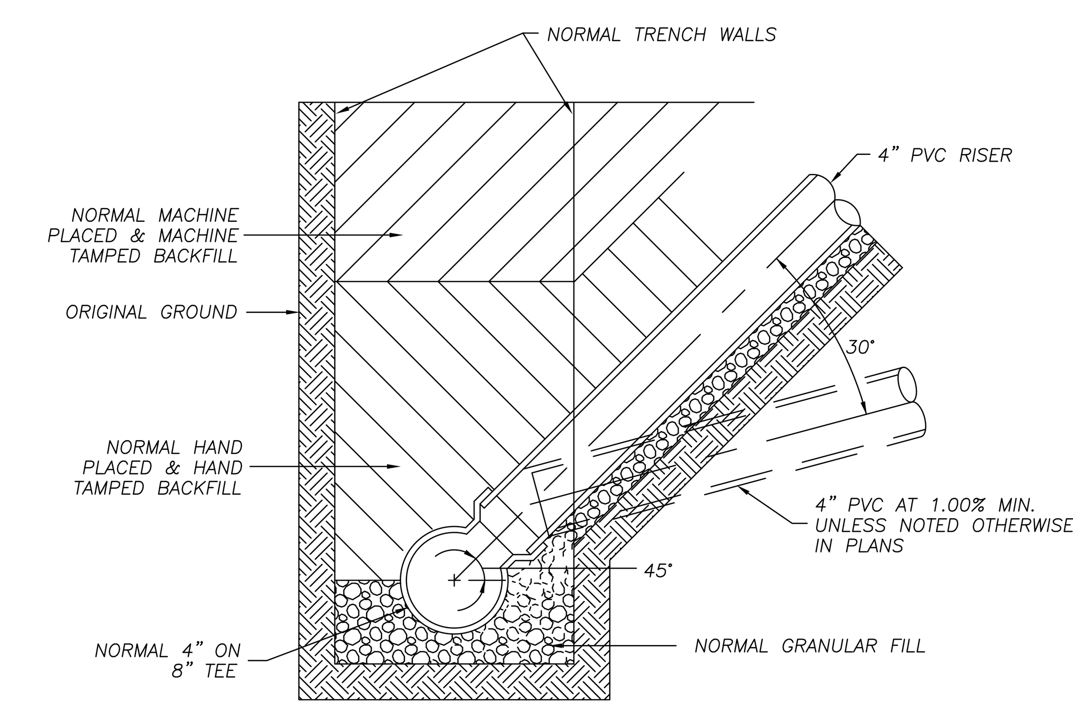

TEE ORIENTATION/RISER
Not to Scale

Note:
Parking Blocks shall be colored as required to meet all local & state codes.
Parking Blocks shall be centered within the parking space as required by all local & state codes.

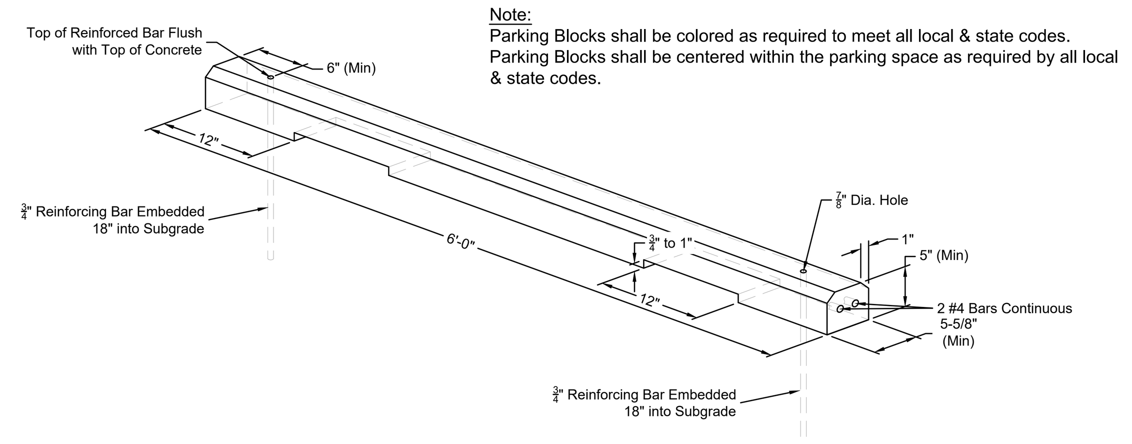

CONCRETE PARKING BLOCK DETAIL
Not to Scale

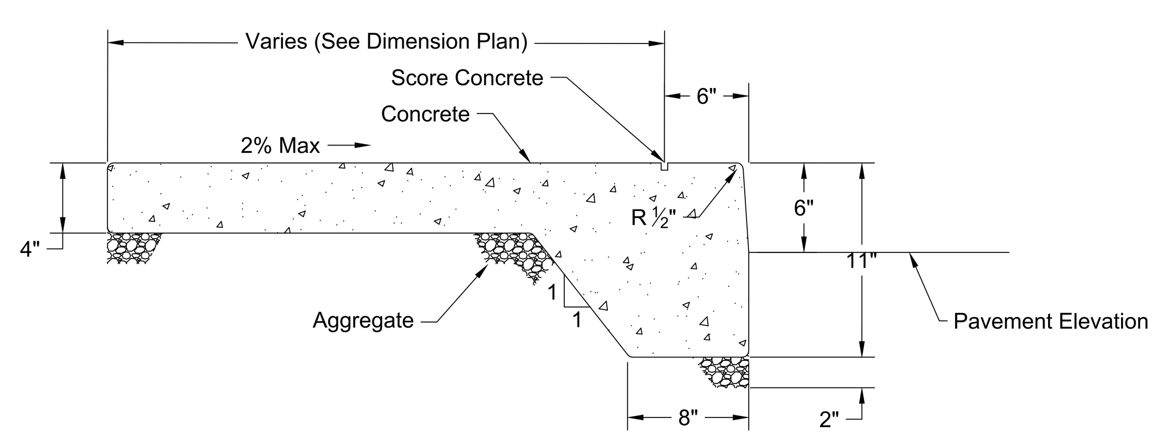

INTEGRAL SIDEWALK - CURB DETAIL
Not to Scale

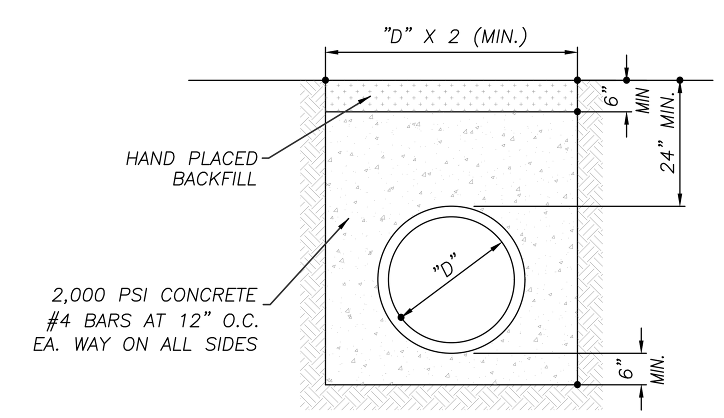

CONCRETE ENCASEMENT
CLASS A

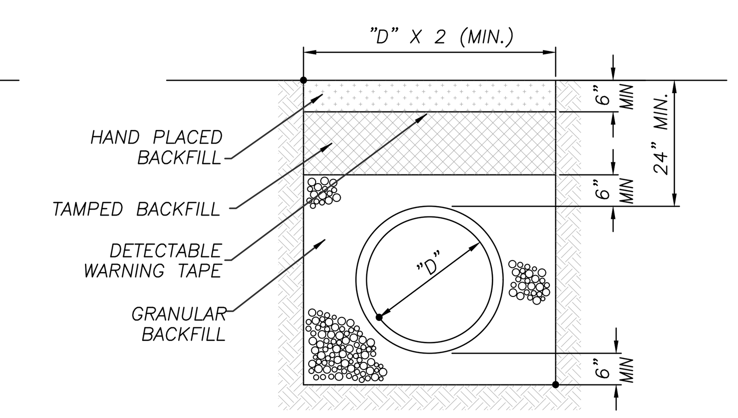

HDPE/PVC PIPE BEDDING
CLASS C

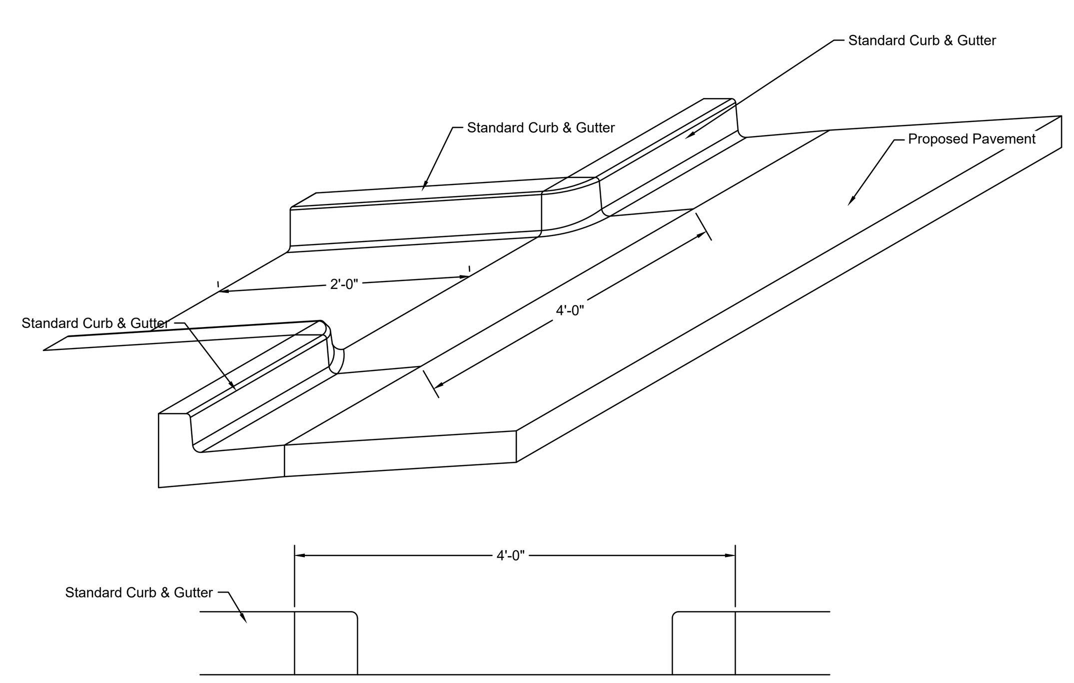

FLUME DETAIL
Not to Scale

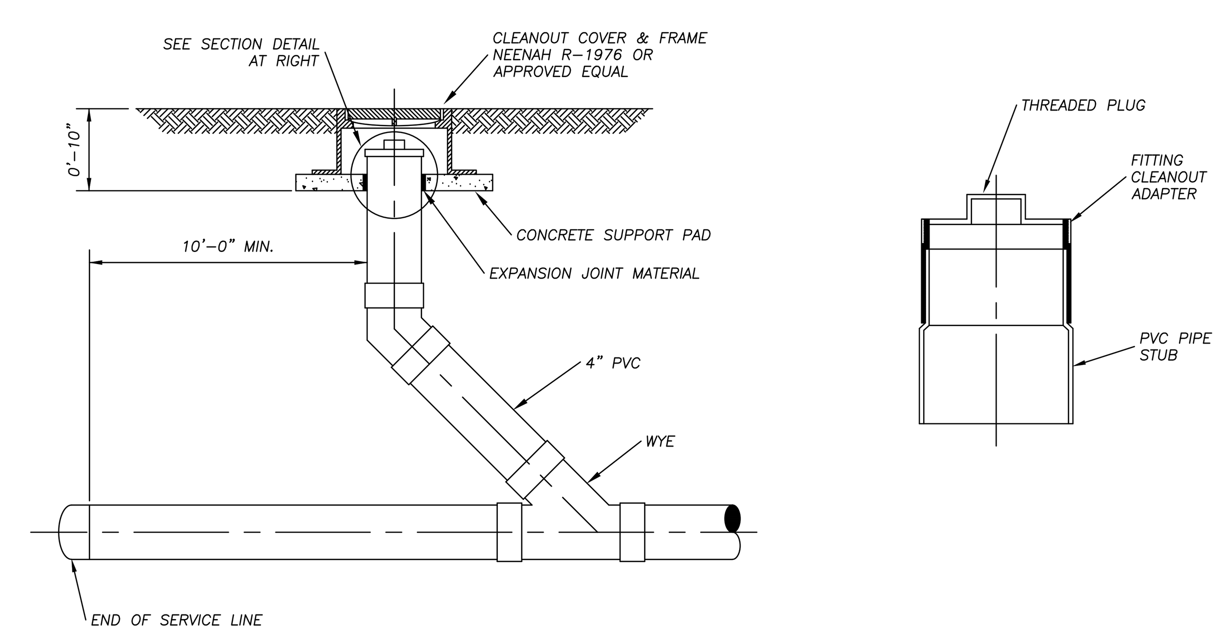

CLEANOUT
Not to Scale

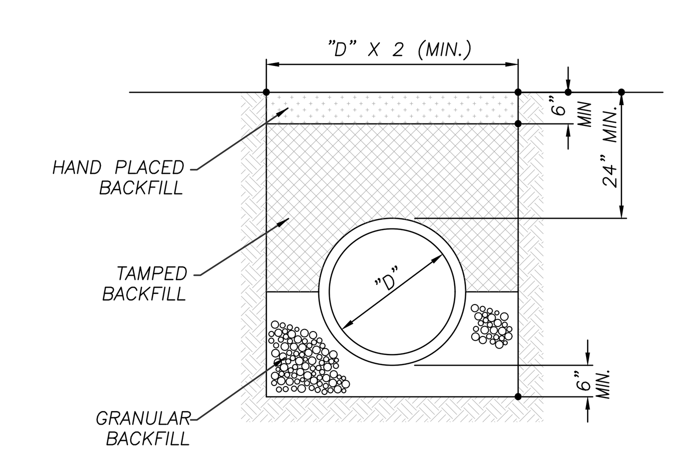

RIGID PIPE (RCP) BEDDING
CLASS B

NOTES:

1. GRANULAR FILL SHALL BE 1/2" CLEAN ROCK OR SAND/GRAVEL BEDDING MEETING MNDOT SELECT GRANULAR BACKFILL REQUIREMENTS (MNDOT 2020 STANDARD SPECIFICATIONS—SECTION 3149), PLACED IN 6" LIFTS AND COMPACTED BY SLICING WITH A SHOVEL.
2. TAMPED FILL SHALL BE FINELY DIVIDED, JOB EXCAVATED MATERIAL FREE OF DEBRIS, ORGANIC MATERIAL, AND STONES, COMPACTED TO 95% OF STANDARD DENSITY, WITH A MAXIMUM OF 5 PERCENTAGE POINTS ABOVE OPTIMUM, AND A MAXIMUM OF 5 PERCENTAGE POINTS BELOW OPTIMUM.
3. HAND PLACED FILL SHALL BE FINELY DIVIDED MATERIAL, FREE OF DEBRIS AND STONES, COMPACTED TO 95% OF STANDARD DENSITY, WITH A MAXIMUM OF 5 PERCENTAGE POINTS ABOVE OPTIMUM, AND A MAXIMUM OF 5 PERCENTAGE POINTS BELOW OPTIMUM. ALL PIPE SHALL BE INSPECTED PRIOR TO BACKFILL.
4. ALL PIPE COVERED PRIOR TO INSPECTION SHALL BE UNCOVERED AT THE CONTRACTORS EXPENSE.

Pipe Bedding
Not to Scale

Construction Documents
22-0111-24
Dollar Tree
Whitewater, Waukesha County, WI

Standard Details

NO.	DATE	REVISION

DRAWN BY	CHECKED BY
AFB	PNC

Renaissance Infrastructure Consulting
132 Abbie Avenue
Kansas City, Kansas 66103
913.317.9500
www.ric-consult.com
WI Certificate of Authority: R068918

WISCONSIN PROFESSIONAL ENGINEER
PATRICK N. CASSITY
E-45916-6
KANSAS CITY, MO

Sheet
C7.0