SITE CONSTRUCTION PLAN

FOR

PROPOSED

MAVIS TIRES & BRAKES - CITY OF WESTLAKE

LOCATION OF SITE

16775 PERSIMMON BLVD

WESTLAKE, FL 33470

CITY OF WESTLAKE

SECTION 01, TOWNSHIP 43 SOUTH, RANGE 40 EAST

PARCEL ID: 77-40-43-01-24-001-0000

REFERENCES AND CONTACTS

REFERENCES

- BOUNDARY & TOPOGRAPHIC SURVEY:
  BOHLER
  1900 NW CORPORATE BLVD. SUITE 101E
  BOCA RATON, FL 33431
  DATED: 3/11/2025
  ELEVATIONS: NAVD 88
- GEOTECHNICAL INVESTIGATION REPORT:
  ECS FLORIDA, LLC - WEST PALM BEACH
  2000 AVENUE "P" SUITE 3
  WEST PALM BEACH, FL 33404
  DATED: 02/27/2025
- ENVIRONMENTAL SITE ASSESSMENT :
  ECS FLORIDA, LLC - WEST PALM BEACH
  2000 AVENUE "P" SUITE 3
  WEST PALM BEACH, FL 33404
  DATED: 02/25/2025
- WESTLAKE PLAZA - PHASE II :
  SIMMONS W& WHITE
  2581 METROCENTRE BLVD WEST, STE 3
  WEST PALM BEACH, FL 33407
  DATED: 02/13/2024
- ARCHITECTURAL PLAN:
  LARSON DESIGN GROUP
  3000 WESTINGHOUSE DRIVE, SUITE 400
  CRANBERRY TWP, PA 16606
  DATED: 07/01/2025
- LANDSCAPE PLAN:
  LANDSCAPE DYNAMICS
  P.O. BOX 2852
  WINTER PARK, FL 32790
  DATED: 07/21/2025

GOVERNING AGENCIES

- PLANNING, ZONING COMMITTEE
  CITY OF WESTLAKE
  4001 SEMINOLE PRATT WHITNEY RD
  WESTLAKE, FL 33470
  PHONE: (561) 530-5880
- BUILDING DEPARTMENT
  CITY OF WESTLAKE
  4001 SEMINOLE PRATT WHITNEY RD
  WESTLAKE, FL 33470
  PHONE: (561) 530-5880 EXT 402
- FIRE DEPARTMENT
  CITY OF WESTLAKE
  4001 SEMINOLE PRATT WHITNEY RD
  WESTLAKE, FL 33470
  PHONE: (561) 530-5880 EXT 108

ROW JURISDICTION

- TRAFFIC, STORMWATER, WATER & SEWER
  CITY OF WESTLAKE PUBLIC WORKS DEPARTMENT
  4001 SEMINOLE PRATT WHITNEY RD
  WESTLAKE, FL 33470
  PHONE: (561) 530-5880

  SEMINOLE IMPROVEMENT DISTRICT
  4001 SEMINOLE PRATT WHITNEY RD
  LOXAHATCHEE, FL 33470
  PHONE: (561) 790-1742

THE ABOVE REFERENCED DOCUMENTS ARE INCORPORATED BY REFERENCE AS PART OF THESE PLANS, HOWEVER, BOHLER ENGINEERING DOES NOT CERTIFY THE ACCURACY OF THE WORK REFERENCED OR DERIVED FROM THESE DOCUMENTS, BY OTHERS.

LOCATION MAP

SCALE: N.T.S.

SHEET INDEX	
SHEET TITLE	NUMBER
COVER SHEET	C-101
GENERAL NOTES	C-102
EXISTING CONDITIONS/ DEMOLITION PLAN	C-201
SITE PLAN	C-301
FIRE TRUCK TURN PLAN	C-302
GRADING PLAN	C-401
UTILITY PLAN	C-501
EROSION AND SEDIMENT CONTROL PLAN PHASE 1	C-801
EROSION AND SEDIMENT CONTROL PLAN PHASE 2	C-802
CONSTRUCTION DETAILS	C-901
FDOT DETAILS	C-902
SEMINOLE IMPROVEMENT DISTRICT DETAILS	C-903
SEMINOLE IMPROVEMENT DISTRICT DETAILS	C-904
LIGHTING PLAN	L-201

LEGAL DESCRIPTION

THE SURVEYED AREA IS A PORTION OF PARCEL A, PLAT OF WESTLAKE PLAZA AS RECORDED IN PLAT BOOK 132, PAGE 77 AND BEING THE LANDS OF PUBLIX SUPER MARKETS, INC. AS RECORDED IN OFFICIAL RECORDS BOOK 32723, PAGE 670, AMONG THE LAND RECORDS OF PALM BEACH COUNTY, FLORIDA AND HAVING A PARCEL CONTROL NUMBER OF 77-40-43-01-24-001-0000 PER THE PALM BEACH COUNTY PROPERTY APPRAISER. THE PROPERTY IS LYING IN SECTION 1; TOWNSHIP 43 SOUTH; RANGE 40 EAST.

PARCEL A AREA = 885,154 SQUARE FEET OR 20.320 ACRES (MEASURED AND PLAT)

THAT LEASEHOLD ESTATE CREATED BY THAT LEASE DATED _____, 2025, FROM PUBLIX SUPER MARKETS, INC., A FLORIDA CORPORATION, AS LESSOR, AND MAVIS SOUTHEAST LLC, A DELAWARE LIMITED LIABILITY COMPANY, AS LESSEE, AS EVIDENCED BY THAT MEMORANDUM OF LEASE RECORDED _____, 2025, IN OFFICIAL RECORDS BOOK ____, PAGE ____, OVER THE FOLLOWING DESCRIBED PROPERTY:

A PORTION OF PARCEL A, WESTLAKE PLAZA, ACCORDING TO THE PLAT THEREOF, AS RECORDED IN PLAT BOOK 132, PAGE 77, OF THE PUBLIC RECORDS OF PALM BEACH COUNTY, FLORIDA.

GENERAL NOTE

IT IS THE RESPONSIBILITY OF THE CONTRACTOR TO REVIEW ALL OF THE DRAWINGS AND SPECIFICATIONS ASSOCIATED WITH THIS PROJECT WORK SCOPE PRIOR TO THE INITIATION OF CONSTRUCTION. SHOULD THE CONTRACTOR FIND A CONFLICT WITH THE DOCUMENTS RELATIVE TO THE SPECIFICATIONS OR APPLICABLE CODES, IT IS THE CONTRACTOR'S RESPONSIBILITY TO NOTIFY THE PROJECT ENGINEER OF RECORD IN WRITING PRIOR TO THE START OF CONSTRUCTION. FAILURE BY THE CONTRACTOR TO NOTIFY THE PROJECT ENGINEER SHALL CONSTITUTE ACCEPTANCE OF FULL RESPONSIBILITY BY THE CONTRACTOR TO COMPLETE THE SCOPE OF THE WORK AS DEFINED BY THE DRAWINGS AND IN FULL CONFORMANCE WITH LOCAL REGULATIONS AND CODES.

OWNER/DEVELOPER

MAVIS SOUTHEAST LLC
100 HILLSIDE AVENUE
WHITE PLAINS, NY 10603
PHONE: 914-984-2500

PREPARED BY

BOHLER

CONTACT: FL-PERMITS@BOHLERENG.COM

Oct 23, 2025
I:\2023\FLA230191.00\ENGINEERING\CAD\DRAWINGS\PLAN SETS\CIVIL SITE PLAN\REV. 0\AP-CIVIL-CNDS-FLA230191.00-0A.----\LAYOUT: C-101 COVR

BOHLER™

SITE CIVIL AND CONSULTING ENGINEERING
LAND SURVEYING
PROGRAM MANAGEMENT
LANDSCAPE ARCHITECTURE
SUSTAINABLE DESIGN
PERMITTING SERVICES
TRANSPORTATION SERVICES

THE INFORMATION, DESIGN AND CONTENT OF THIS PLAN IS THE PROPERTY OF AND SHALL NOT BE COPIED OR USED FOR ANY PURPOSE WITHOUT THE WRITTEN AUTHORIZATION FROM BOHLER. ONLY APPROVED, SIGNED AND SEALED PLANS SHALL BE UTILIZED FOR CONSTRUCTION PURPOSES
© 2025 BOHLER

REVISIONS

REV	DATE	COMMENT	DRAWN BY / CHECKED BY
1	7/14/2025	1ST ROUND OF COMMENTS	AH / KD
2	8/11/2025	2ND ROUND OF COMMENTS	AH / KD
3	08/14/2025	QAQC COMMENTS	AH / KD
4	10/23/2025	3RD ROUND OF COMMENTS	KD / KD

811 KNOW WHAT'S BELOW ALWAYS CALL 811 BEFORE YOU DIG
It's fast. It's free. It's the law.
www.callsunshine.com

ISSUED FOR MUNICIPAL & AGENCY REVIEW & APPROVAL

THIS DRAWING IS INTENDED FOR MUNICIPAL AND/OR AGENCY REVIEW AND APPROVAL. IT IS NOT INTENDED AS A CONSTRUCTION DOCUMENT UNLESS INDICATED OTHERWISE.

PROJECT No.: FLA230191.00-0A
DRAWN BY: ~AH/MV~
CHECKED BY: ~KD/KM ~
DATE: 10/23/2025
CAD I.D.: P-CIVIL-CNDS

PROJECT:

SITE CONSTRUCTION PLANS

FOR

MAVIS TIRES & BRAKES - CITY OF WESTLAKE
16775 PERSIMMON BLVD
WESTLAKE, FL 33470
CITY OF WESTLAKE
S 01, T 43S, R 40E

BOHLER™
600 N. WESTSHORE BLVD. SUITE 950
TAMPA, FLORIDA 33609
Phone: (813) 812-4100
Fax: (813) 812-4101
FLORIDA BUSINESS CERT. OF AUTH. No. 30780

KAYLA M. DEDRICK LICENSE No. 88107 STATE OF FLORIDA PROFESSIONAL ENGINEER

Digitally signed by Kayla Dedrick
DN: c=US, st=Florida, l=Tampa, cn=Kayla Dedrick, O=BOHLER ENGINEERING FL, LLC", L=Boca Raton, Software, SERIALNUMBER=MAS3250217954149, ou=Tampa
Date: 2025.10.24 11:40:53-04'00'

This item has been digitally signed and sealed by Kayla M. Dedrick PE on the date adjacent to the seal. Signature must be verified on any electronic copies.

SHEET TITLE:

COVER SHEET

SHEET NUMBER:

C-101

REVISION 4 - 10/23/2025

GENERAL NOTES

(Rev. 1/2023)

1. THESE PLANS ARE SOLELY BASED ON INFORMATION THE OWNER AND OTHERS PROVIDED TO BOHLER ENGINEERING FL, LLC (HEREIN "BOHLER") PRIOR TO THE DATE ON WHICH THE PROFESSIONAL OF RECORD AND BOHLER PREPARED THESE PLANS. THE CONTRACTOR MUST FIELD VERIFY ALL EXISTING CONDITIONS AND IMMEDIATELY NOTIFY BOHLER , IN WRITING, IF ANY ACTUAL SITE CONDITIONS DIFFER FROM THOSE SHOWN ON THESE PLANS, OR IF THE PROPOSED WORK CONFLICTS WITH ANY OTHER SITE FEATURES.
2. THE CONTRACTOR MUST STRICTLY COMPLY WITH THESE NOTES AND ALL SPECIFICATIONS/REPORTS CONTAINED HEREIN. THE CONTRACTOR MUST ENSURE THAT ALL SUBCONTRACTORS AND EMPLOYEES CONFORM TO AND COMPLY WITH THESE REQUIREMENTS. THESE NOTES, AND THE REQUIREMENTS ARTICULATED IN THE NOTES CONTAINED IN ALL THE OTHER DRAWINGS THAT COMPRISE THE PLAN SET OF DRAWINGS. ADDITIONAL NOTES AND SPECIFIC PLAN NOTES MAY BE FOUND ON THE INDIVIDUAL PLANS. THESE GENERAL NOTES APPLY TO THIS ENTIRE DOCUMENT PACKAGE. IT IS THE CONTRACTOR'S RESPONSIBILITY TO REVIEW ALL CONSTRUCTION CONTRACT DOCUMENTS INCLUDING, BUT NOT LIMITED TO, ALL OF THE DRAWINGS AND SPECIFICATIONS ASSOCIATED WITH THE PROJECT WORK SCOPE, PRIOR TO THE INITIATION AND COMMENCEMENT OF CONSTRUCTION.
3. PRIOR TO THE COMMENCEMENT OF CONSTRUCTION, THE CONTRACTOR MUST CONFIRM WITH THE PROFESSIONAL OF RECORD AND BOHLER THAT THE LATEST EDITION OF THE DOCUMENTS AND/OR REPORTS REFERENCED WITHIN THE PLAN REFERENCES ARE BEING USED FOR CONSTRUCTION. THIS IS THE CONTRACTOR'S SOLE AND COMPLETE RESPONSIBILITY.
4. PRIOR TO THE COMMENCEMENT OF CONSTRUCTION, THE CONTRACTOR MUST ENSURE THAT ALL REQUIRED PERMITS AND APPROVALS HAVE BEEN OBTAINED, NO CONSTRUCTION OR FABRICATION IS TO BEGIN UNTIL THE CONTRACTOR HAS REVIEWED THEM THOROUGHLY, AND UNDERSTANDS THE CONDITIONS OF APPROVAL TO ALL PLANS AND OTHER DOCUMENTS REVIEWED AND APPROVED BY THE PERMITTING AUTHORITIES AND HAS ALSO CONFIRMED THAT ALL NECESSARY AND REQUIRED PERMITS HAVE BEEN OBTAINED. THE CONTRACTOR MUST HAVE COPIES OF ALL PERMITS AND APPROVALS ON SITE AT ALL TIMES.
5. THE CONTRACTOR MUST ENSURE THAT ALL WORK IS PERFORMED IN ACCORDANCE WITH THESE PLANS, SPECIFICATIONS/REPORTS AND CONDITIONS OF APPROVAL AND ALL APPLICABLE REQUIREMENTS, RULES, REGULATIONS, STATUTORY REQUIREMENTS, CODES, LAWS AND STANDARDS OF ALL GOVERNMENTAL ENTITIES WITH JURISDICTION OVER THIS PROJECT, AND ALL PROVISIONS IN AND CONDITIONS OF THE CONSTRUCTION CONTRACT WITH THE OWNER/DEVELOPER INCLUDING ALL EXHIBITS, ATTACHMENTS AND ADDENDA TO SAME.
6. PRIOR TO THE COMMENCEMENT OF CONSTRUCTION, THE CONTRACTOR MUST COORDINATE THE BUILDING LAYOUT BY CAREFULLY REVIEWING THE MOST CURRENT ARCHITECTURAL, CIVIL AND STRUCTURAL CONSTRUCTION DOCUMENTS (INCLUDING, BUT NOT LIMITED TO, MECHANICAL, ELECTRICAL, PLUMBING AND FIRE SUPPRESSION PLANS, WHERE APPLICABLE). THE CONTRACTOR MUST IMMEDIATELY NOTIFY OWNER, ARCHITECT AND PROFESSIONAL OF RECORD AND BOHLER, IN WRITING, OF ANY CONFLICTS, DISCREPANCIES OR AMBIGUITIES WHICH EXIST BETWEEN THESE PLANS AND ANY OTHER PLANS THAT COMPRISE THE CONSTRUCTION DOCUMENTS.
7. CONTRACTOR MUST REFER TO AND ENSURE COMPLIANCE WITH THE APPROVED ARCHITECTURAL/BUILDING PLANS OF RECORD FOR EXACT LOCATIONS AND DIMENSIONS OF ENTRY/EXIT POINTS, ELEVATIONS, PRECISE BUILDING DIMENSIONS, AND EXACT BUILDING UTILITY LOCATIONS.
8. THE CONTRACTOR MUST FIELD VERIFY ALL DIMENSIONS AND MEASUREMENTS SHOWN ON these PLANS, PRIOR TO THE COMMENCEMENT OF CONSTRUCTION. THE CONTRACTOR MUST IMMEDIATELY NOTIFY PROFESSIONAL OF RECORD AND BOHLER, IN WRITING, IF ANY CONFLICTS, DISCREPANCIES, OR AMBIGUITIES EXIST PRIOR TO PROCEEDING WITH CONSTRUCTION. NO EXTRA COMPENSATION WILL BE PAID TO THE CONTRACTOR FOR WORK WHICH HAS TO BE RE-DONE DUE TO DIMENSIONS, MEASUREMENTS OR GRADES BEING INCORRECTLY PLACED. THESE PLANS PRIOR TO BOTH (A) THE CONTRACTOR GIVING PROFESSIONAL OF RECORD AND BOHLER WRITTEN NOTIFICATION OF SAME AND (B) PROFESSIONAL OF RECORD AND BOHLER, THEREAFTER, PROVIDING THE CONTRACTOR WITH WRITTEN AUTHORIZATION TO PROCEED WITH SUCH ADDITIONAL WORK.
9. THE CONTRACTOR MUST VERIFY ALL DIMENSIONS AND MEASUREMENTS INCLUDED ON DESIGN DOCUMENTS HEREIN AND MUST NOT SCALE OFF THE DRAWINGS DUE TO POTENTIAL PRINTING INACCURACIES. ALL DIMENSIONS AND MEASUREMENTS MUST BE CHECKED AND CONFIRMED BY THE GENERAL CONTRACTOR PRIOR TO PREPARATION OF SHOP DRAWINGS, FABRICATION/ORDERING OF PARTS AND MATERIALS AND COMMENCEMENT OF SITE WORK. SITE PLAN DRAWINGS ARE NOT INTENDED AS SURVEY DOCUMENTS. DIMENSIONS AND ITEMS REPRESENTED ON SURVEY DRAWINGS SUPERSEDE GRAPHICAL REPRESENTATIONS. THE CONTRACTOR MUST MAKE CONTRACTOR'S OWN MEASUREMENTS FOR LAYOUT OF IMPROVEMENTS.
10. THE OWNER AND CONTRACTOR MUST BE FAMILIAR WITH AND RESPONSIBLE FOR THE PROCUREMENT OF ANY AND ALL CERTIFICATIONS REQUIRED FOR THE ISSUANCE OF A CERTIFICATE OF OCCUPANCY.
11. WHEN INCLUDED AS ONE OF THE REFERENCED DOCUMENTS, THE GEOTECHNICAL REPORT, SPECIFICATIONS AND RECOMMENDATIONS SET FORTH THEREIN ARE A PART OF THE REQUIRED CONTRACT DOCUMENTS AND, IN CASE OF CONFLICT, DISCREPANCY OR AMBIGUITY, THE MORE STRINGENT REQUIREMENTS AND/OR RECOMMENDATIONS CONTAINED IN: (A) THE PLANS; AND (B) THE GEOTECHNICAL REPORT AND RECOMMENDATIONS, MUST TAKE PRECEDENCE UNLESS SPECIFICALLY NOTED OTHERWISE ON THE PLANS. THE CONTRACTOR MUST NOTIFY THE PROFESSIONAL OF RECORD AND BOHLER, IN WRITING, OF ANY SUCH CONFLICT, DISCREPANCY OR AMBIGUITY. THE GEOTECHNICAL REPORT AND PLANS AND SPECIFICATIONS, PRIOR TO PROCEEDING WITH ANY FURTHER WORK. IF A GEOTECHNICAL REPORT WAS NOT CREATED, THEN THE CONTRACTOR MUST FOLLOW AND COMPLY WITH ALL OF THE REQUIREMENTS OF ANY AND ALL MUNICIPAL, COUNTY, STATE, AND FEDERAL LAWS AND APPLICABLE SPECIFICATION WHICH HAVE JURISDICTION OVER THIS PROJECT.
12. PROFESSIONAL OF RECORD AND BOHLER ARE NEITHER LIABLE NOR RESPONSIBLE FOR ANY SUBSURFACE CONDITIONS AND FURTHER, HAS NO LIABILITY FOR ANY HAZARDOUS MATERIALS OR POLLUTANTS ON, ABOUT OR UNDER THE PROPERTY UNLESS OTHERWISE AGREED TO IN WRITING.
13. THE CONTRACTOR IS RESPONSIBLE FOR IDENTIFYING WHEN AND WHERE SHORING IS REQUIRED AND FOR INSTALLING ALL SHORING REQUIRED DURING EXCAVATION (TO BE PERFORMED IN ACCORDANCE WITH CURRENT OSHA STANDARDS) AND ANY ADDITIONAL PRECAUTIONS TO BE TAKEN TO ASSURE THE STABILITY OF ADJACENT, NEARBY AND ADJOINING STRUCTURES AND PROPERTIES. ALL OF THIS WORK IS TO BE PERFORMED AT THE CONTRACTOR'S SOLE COST AND EXPENSE.
14. THE CONTRACTOR MUST EXERCISE EXTREME CAUTION WHEN PERFORMING ANY WORK ACTIVITIES ADJACENT TO PAVEMENT, STRUCTURES, ETC. WHICH ARE TO REMAIN EITHER FOR AN INITIAL PHASE OF THE PROJECT OR AS PART OF THE FINAL CONDITION. THE CONTRACTOR IS RESPONSIBLE FOR TAKING ALL APPROPRIATE MEASURES REQUIRED TO ENSURE THE STRUCTURAL STABILITY OF SIDEWALKS AND PAVEMENT, UTILITIES, BUILDINGS, AND INFRASTRUCTURE AND ANY OTHER AREA FOR THIRD PARTIES PEDESTRIANS AND ANYONE ELSE WHICH MAY BE DAMAGED OR INVOLVED WITH THE PROJECT.
15. DEBRIS MUST BE BURIED ON THE SUBJECT SITE. ALL DEMOLITION AND CONSTRUCTION WASTES, UNSUITABLE EXCAVATED MATERIAL, EXCESS SOIL AND DEBRIS (SOLID WASTE) MUST BE DISPOSED OF IN ACCORDANCE WITH THE REQUIREMENTS OF ANY AND ALL MUNICIPAL, COUNTY, STATE, AND FEDERAL LAWS AND APPLICABLE CODES WHICH HAVE JURISDICTION OVER THIS PROJECT OR OVER THE CONTRACTOR.
16. IT IS THE CONTRACTOR'S SOLE RESPONSIBILITY TO DEMONSTRATE PROPER AND FULLY COMPLIANT DISPOSAL ACTIVITIES, TO BE PROMPTLY PROVIDED TO THE OWNER UPON REQUEST.
17. THE CONTRACTOR MUST REPAIR, AT CONTRACTOR'S SOLE COST, ALL DAMAGE DONE TO ANY NEW OR EXISTING CONSTRUCTION OR PROPERTY DURING THE COURSE OF CONSTRUCTION, INCLUDING BUT NOT LIMITED TO DRAINAGE, UTILITIES, PAVEMENT, STRIPING, CURB, ETC. AND MUST BEAR ALL COSTS ASSOCIATED WITH SAME TO INCLUDE, BUT NOT BE LIMITED TO, REDESIGN, RE-SURVEY, RE-PERMITTING AND CONSTRUCTION. THE CONTRACTOR IS RESPONSIBLE FOR ANY AND MUST REPLACE ALL SIGNAL INTERCONNECTION CABLE, WIRING CONDUITS, AND ANY ADDITIONAL ASSOCIATED ACCESSORY EQUIPMENT DAMAGED DURING CONSTRUCTION AND MUST BEAR ALL COSTS ASSOCIATED WITH SAME. THE REPAIR OF ANY SUCH NEW OR EXISTING CONSTRUCTION OR PROPERTY MUST RESTORE SUCH CONSTRUCTION OR PROPERTY TO A CONDITION EQUIVALENT TO OR BETTER THAN THE CONDITIONS PRIOR TO COMMENCEMENT OF THE CONSTRUCTION, AND IN CONFORMANCE WITH APPLICABLE CODES, LAWS, RULES, REGULATIONS, STATUTORY REQUIREMENTS AND STATUTES. THE CONTRACTOR MUST BEAR ALL COSTS ASSOCIATED WITH SAME. THE CONTRACTOR MUST, PROMPTLY, DOCUMENT ALL EXISTING DAMAGE AND NOTIFY, IN WRITING, THE OWNER AND THE CONSTRUCTION MANAGER PRIOR TO THE START OF CONSTRUCTION.
18. PROFESSIONAL OF RECORD AND BOHLER ARE NOT RESPONSIBLE FOR AND HAVE NO CONTRACTUAL, LEGAL OR OTHER RESPONSIBILITIES FOR JOB SITE SAFETY JOB SITE SUPERVISION, OR ANYTHING RELATED TO SAME. THE PROFESSIONAL OF RECORD AND BOHLER HAVE NOT BEEN RETAINED TO PERFORM OR TO BE RESPONSIBLE FOR JOB SITE SAFETY. SAME BEING WHOLLY OUTSIDE OF PROFESSIONAL OF RECORD'S AND BOHLER'S SERVICES AS PROFESSIONAL OF RECORD AND BOHLER ARE NOT RESPONSIBLE TO IDENTIFY OR REPORT ANY JOB SITE SAFETY ISSUES OR ANY JOB SITE CONDITIONS, AT ANY TIME.
19. THE CONTRACTOR MUST INDEMNIFY, DEFEND AND HOLD HARMLESS PROFESSIONAL OF RECORD AND BOHLER , ANY DISCREPANCIES THAT MAY OR COULD AFFECT THE PUBLIC SAFETY, HEALTH OR GENERAL WELFARE, OR PROJECT COST. IF THE CONTRACTOR PROCEEDS WITH CONSTRUCTION WITHOUT PROVIDING PROPER WRITTEN NOTIFICATION AS DESCRIBED ABOVE, IT WILL BE AT THE CONTRACTOR'S OWN RISK AND, FURTHER, THE CONTRACTOR MUST INDEMNIFY, DEFEND AND HOLD HARMLESS PROFESSIONAL OF RECORD AND BOHLER FOR ANY AND ALL DAMAGES, COSTS, INJURIES, ATTORNEY'S FEES AND THE LIKE WHICH RESULT FROM OR ARE IN ANY WAY RELATED TO SAME INCLUDING, BUT NOT LIMITED TO, ANY THIRD PARTY FIRST PARTY CLAIMS.
20. THE PROFESSIONAL OF RECORD AND BOHLER ARE NOT RESPONSIBLE FOR ANY INJURY OR DAMAGES RESULTING FROM THE CONTRACTOR'S FAILURE TO BUILD OR CONSTRUCT IN STRICT ACCORDANCE WITH THE APPROVED PLANS, AND, CURRENT CODES, RULES, STATUTES AND THE LIKE. IF THE CONTRACTOR AND/OR OWNER FAIL TO BUILD OR CONSTRUCT IN STRICT ACCORDANCE WITH APPROVED PLANS, RULES, STATUTES, CODES AND THE LIKE, THE CONTRACTOR AND/OR OWNER SHALL BE SOLELY RESPONSIBLE FOR ALL INJURIES, CLAIMS AND DAMAGES THAT PROFESSIONAL OF RECORD AND BOHLER SUFFER AND ANY AND ALL COSTS THAT PROFESSIONAL OF RECORD AND BOHLER INCUR AS RELATED TO SAME.
21. ALL CONTRACTORS MUST CARRY AT LEAST THE MINIMUM AMOUNT OF THE SPECIFIED AND COMMERCIALLY REASONABLE STATUTORY WORKER'S COMPENSATION INSURANCE, EMPLOYER'S LIABILITY INSURANCE AND COMMERCIAL GENERAL LIABILITY INSURANCE (CGL) INCLUDING ALSO ALL UMBRELLA COVERAGES ALL CERTIFICATES MUST NAME BOHLER AS AN ADDITIONAL INSURED UNDER THE GENERAL CONTRACTOR'S POLICIES OF GENERAL LIABILITY INSURANCE.
22. WHEN IT IS CLEARLY AND SPECIFICALLY WITHIN BOHLER'S SCOPE OF SERVICES CONTRACT WITH THE OWNER/DEVELOPER, BOHLER WILL REVIEW OR TAKE OTHER APPROPRIATE ACTION ON THE CONTRACTOR SUBMITTALS, SUCH AS SHOP DRAWINGS, PRODUCT DATA, SAMPLES, AND OTHER DATA, WHICH THE CONTRACTOR IS REQUIRED TO SUBMIT, BUT ONLY FOR THE LIMITED PURPOSE OF EVALUATING CONFORMANCE WITH THE DESIGN INTENT AND THE INFORMATION SHOWN IN THE CONSTRUCTION CONTRACT DOCUMENTS. CONSTRUCTION MEANS AND METHODS AND/OR TECHNIQUES OR PROCEDURES, COORDINATION OF THE WORK WITH OTHER TRADES, AND CONSTRUCTION SAFETY PRECAUTIONS ARE THE SOLE RESPONSIBILITY OF THE CONTRACTOR AND BOHLER HAS NO RESPONSIBILITY OR LIABILITY FOR SUCH. THE CONTRACTOR WILL PERFORM ITS SHOP DRAWING REVIEW WITH REASONABLE PROMPTNESS, AS CONDITIONS PERMIT. ANY DOCUMENT, DOCUMENTING BOHLER'S REVIEW OF A SPECIFIC ITEM OR LIMITED SCOPE, MUST NOT INDICATE THAT BOHLER HAS REVIEWED THE ENTIRE ASSEMBLY OF WHICH THE ITEM IS A COMPONENT. BOHLER IS NOT RESPONSIBLE FOR ANY DEVIATIONS FROM THE CONSTRUCTION DOCUMENTS. THE CONTRACTOR MUST, IN WRITING, PROMPTLY AND IMMEDIATELY BRING ANY DEVIATIONS FROM THE CONSTRUCTION DOCUMENTS TO BOHLER'S ATTENTION. BOHLER IS NOT REQUIRED TO REVIEW PARTIAL SUBMISSIONS OR THOSE FOR WHICH SUBMISSIONS OF CORRELATED ITEMS HAVE NOT BEEN RECEIVED.
23. IF THE CONTRACTOR DEVIATES FROM THESE PLANS AND/OR SPECIFICATIONS, INCLUDING THE NOTES CONTAINED HEREIN, WITHOUT FIRST OBTAINING THE PRIOR WRITTEN AUTHORIZATION OF THE PROFESSIONAL OF RECORD AND BOHLER FOR ALL DEVIATIONS WITHIN PROFESSIONAL OF RECORD'S SCOPE, THE CONTRACTOR IS SOLELY RESPONSIBLE FOR THE PAYMENT OF ALL COSTS INCURRED IN CORRECTING ANY WORK PERFORMED WHICH DEVIATES FROM THE PLANS, ALL FINES AND/OR PENALTIES ASSESSED WITH RESPECT THERETO AND ALL COMPENSATORY OR PUNITIVE DAMAGES RESULTING THEREFROM AND, FURTHER, THE CONTRACTOR MUST INDEMNIFY, DEFEND AND HOLD HARMLESS THE PROFESSIONAL OF RECORD AND BOHLER PARTIES TO THE FULLEST EXTENT PERMITTED UNDER THE LAW, FOR AND FROM ALL FINES, ATTORNEYS' FEES, DAMAGES, COSTS, JUDGMENTS, CLAIMS, INJURIES, PENALTIES AND THE LIKE RELATED TO SAME.
24. THE CONTRACTOR IS RESPONSIBLE FOR A MAINTAINING AND PROTECTING THE TRAFFIC CONTROL PLAN AND ELEMENTS IN ACCORDANCE WITH FEDERAL, STATE, AND LOCAL REQUIREMENTS, FOR ALL WORK THAT AFFECTS PUBLIC TRAVEL EITHER IN THE RIGHT OF WAY OR ON SITE. THE COST FOR THIS ITEM MUST BE INCLUDED IN THE CONTRACTORS PRICE AND IS THE CONTRACTOR'S SOLE RESPONSIBILITY.
25. OWNER MUST MAINTAIN AND PRESERVE ALL PHYSICAL SITE FEATURES AND DESIGN FEATURES DEPICTED ON THE PLANS AND RELATED DOCUMENTS IN STRICT ACCORDANCE WITH THE APPROVED PLANS AND DESIGN, AND, FURTHER, THE OWNER IS SOLELY RESPONSIBLE FOR ANY FAILURE TO MAINTAIN AND/OR PRESERVE SITE AND/OR DESIGN FEATURES. IF OWNER FAILS TO MAINTAIN AND/OR PRESERVE ALL PHYSICAL SITE FEATURES AND/OR DESIGN FEATURES DEPICTED ON THE PLANS AND RELATED DOCUMENTS, OWNER AGREES TO INDEMNIFY AND HOLD THE PROFESSIONAL OF RECORD AND BOHLER PARTIES, HARMLESS FOR ALL INJURIES, DAMAGES AND COSTS THAT PROFESSIONAL OF RECORD AND BOHLER INCUR AS A RESULT OF SAID FAILURE OR FAILURE TO PRESERVE.
26. THE CONTRACTOR IS SOLELY RESPONSIBLE FOR ENSURING THAT ALL CONSTRUCTION ACTIVITIES AND MATERIALS COMPLY WITH AND CONFORM TO APPLICABLE FEDERAL, STATE AND LOCAL RULES AND REGULATIONS, LAWS, ORDINANCES, AND CODES, AND ALL APPLICABLE REQUIREMENTS OF THE OCCUPATIONAL SAFETY AND HEALTH ACT OF 1970, (29 U.S.C. 651 ET SEQ.) AS AMENDED, AND ANY MODIFICATIONS, AMENDMENTS OR REVISIONS TO SAME.
27. THE CONTRACTOR MUST STRICTLY COMPLY WITH THE LATEST AND CURRENT OSHA STANDARDS AND REGULATIONS, AND/OR ANY OTHER AGENCY WITH JURISDICTION OVER EXCAVATION AND TRENCHING PROCEDURES. PROFESSIONAL OF RECORD AND BOHLER HAS NO RESPONSIBILITY FOR OR AS RELATED TO EXCAVATION AND TRENCHING PROCEDURES AND WORK.
28. THE CONTRACTOR AND THE OWNER MUST INSTALL ALL ELEMENTS AND COMPONENTS IN STRICT COMPLIANCE WITH AND IN ACCORDANCE WITH MANUFACTURER'S STANDARDS AND RECOMMENDED INSTALLATION CRITERIA AND SPECIFICATIONS. THE CONTRACTOR AND/OR OWNER FAIL TO DO SO, THEY AGREE TO JOINTLY, INDEPENDENTLY, SEPARATELY, COLLECTIVELY, AND SEVERALLY INDEMNIFY, DEFEND, PROTECT AND HOLD PROFESSIONAL OF RECORD AND BOHLER HARMLESS FOR ALL INJURIES AND DAMAGES THAT PROFESSIONAL OF RECORD SUFFERS AND COSTS THAT PROFESSIONAL OF RECORD INCURS AS A RESULT OF SAID FAILURE.
29. THE CONTRACTOR IS RESPONSIBLE TO MAINTAIN AN ON-SITE STORMWATER POLLUTION PREVENTION PLAN (SWPPP) IN COMPLIANCE WITH THE ENVIRONMENTAL PROTECTION AGENCY (EPA) REQUIREMENTS OR LOCAL GOVERNING AGENCY FOR SITES WHERE ONE (1) ACRE OR MORE IS DISTURBED BY CONSTRUCTION ACTIVITIES (UNLESS THE LOCAL JURISDICTION REQUIRES A DIFFERENT THRESHOLD). THE CONTRACTOR MUST ENSURE THAT ALL ACTIVITIES, INCLUDING THOSE OF ALL SUBCONTRACTORS, ARE IN COMPLIANCE WITH THE SWPPP. INCLUDING BUT NOT LIMITED TO LOGGING ACTIVITIES (MINIMUM ONCE PER WEEK AND AFTER RAINFALL EVENTS) AND CORRECTIVE MEASURES, AS APPROPRIATE AND FURTHER, THE CONTRACTOR IS SOLELY AND COMPLETELY RESPONSIBLE FOR FAILING TO DO SO.
30. AS CONTAINED IN THESE DRAWINGS AND ASSOCIATED DOCUMENTS PREPARED BY THE PROFESSIONAL OF RECORD AND BOHLER, THE USE OF THE WORDS 'CERTIFY' OR 'CERTIFICATION' CONSTITUTE(S) AN EXPRESSION ONLY OF PROFESSIONAL OPINION REGARDING THE INFORMATION WHICH IS THE SUBJECT OF THE PROFESSIONAL OF RECORD'S AND BOHLER KNOWLEDGE OR BELIEF AND IN ACCORDANCE WITH COMMON AND ACCEPTED PROCEDURE CONSISTENT WITH THE APPLICABLE STANDARDS OF PRACTICE, AND DOES NOT CONSTITUTE A WARRANTY OR GUARANTEE OF ANY NATURE OR TYPE, EITHER EXPRESSED OR IMPLIED, UNDER ANY CIRCUMSTANCES.

DEMOLITION NOTES

(Rev. 1/2023)

1. THE GENERAL NOTES MUST BE INCLUDED AS PART OF THIS ENTIRE DOCUMENT PACKAGE AND ARE PART OF THE CONTRACT DOCUMENTS. THE GENERAL NOTES ARE REFERENCED HEREIN, AND THE CONTRACTOR MUST REFER TO THEM AND FULLY COMPLY WITH THESE NOTES, IN THEIR ENTIRETY. THE CONTRACTOR MUST BE FAMILIAR WITH AND ACKNOWLEDGE FAMILIARITY WITH ALL OF THE GENERAL NOTES AND ALL OF THE PLANS' SPECIFIC NOTES.
2. THE CONTRACTOR MUST CONDUCT DEMOLITION/REMOVALS ACTIVITIES IN SUCH A MANNER AS TO ENSURE MINIMUM INTERFERENCE WITH ADJACENT ROADS, STREETS, WALKWAYS, BUILDINGS, WALKWAYS, AND ALL OTHER ADJACENT FACILITIES. THE CONTRACTOR MUST OBTAIN ALL APPLICABLE PERMITS FROM THE APPROPRIATE GOVERNMENTAL AUTHORITY(IES) PRIOR TO THE COMMENCEMENT OF ANY ROAD OPENING OR DEMOLITION ACTIVITIES IN OR ADJACENT TO THE RIGHT-OF-WAY.
3. WHEN DEMOLITION-RELATED ACTIVITIES IMPACT ROADWAYS AND/OR ROADWAY RIGHT-OF-WAY, THE CONTRACTOR MUST PROVIDE TRAFFIC CONTROL AND GENERALLY ACCEPTED SAFE PRACTICES IN CONFORMANCE WITH THE CURRENT FEDERAL HIGHWAY ADMINISTRATION "MANUAL ON UNIFORM TRAFFIC CONTROL DEVICES" (MUTCD), AND THE FEDERAL, STATE, AND LOCAL REGULATIONS.
4. THE DEMOLITION AND/OR REMOVAL PLAN(S) IS INTENDED TO PROVIDE GENERAL INFORMATION AND TO IDENTIFY ONLY CONDITIONS REGARDING ITEMS TO BE DEMOLISHED, REMOVED, AND/OR TO REMAIN.
   A. THE CONTRACTOR MUST ALSO REVIEW ALL CONSTRUCTION DOCUMENTS AND INCLUDE WITHIN THE DEMOLITION ACTIVITIES ALL INCIDENTAL WORK NECESSARY FOR FABRICATION OF NEW IMPROVEMENTS.
   B. THIS PLAN IS NOT INTENDED TO AND DOES NOT PROVIDE DIRECTION REGARDING THE MEANS, METHODS, SEQUENCING, TECHNIQUES AND PROCEDURES TO BE EMPLOYED TO ACCOMPLISH THE WORK. ALL MEANS, METHODS, SEQUENCING, TECHNIQUES AND PROCEDURES TO BE USED MUST BE IN STRICT ACCORDANCE AND CONFORMANCE WITH ALL STATE, FEDERAL, LOCAL, AND JURISDICTIONAL REQUIREMENTS. THE CONTRACTOR MUST COMPLY WITH ALL OSHA AND OTHER SAFETY PRECAUTIONS NECESSARY TO PROVIDE A SAFE WORK SITE FOR THE CONTRACTOR AND THEIR STAFF.
5. THE CONTRACTOR MUST PROVIDE ALL "METHODS AND MEANS" NECESSARY TO PREVENT MOVEMENT, SETTLEMENT, OR COLLAPSE OF EXISTING STRUCTURES, AND ANY OTHER IMPROVEMENTS THAT ARE REMAINING ON OR OFF SITE. THE CONTRACTOR, AT THE CONTRACTOR'S SOLE COST, MUST REPAIR ALL DAMAGE TO ALL ITEMS AND FEATURES THAT ARE TO REMAIN. CONTRACTOR MUST USE NEW MATERIAL FOR ALL REPAIRS. CONTRACTOR'S REPAIRS MUST INCLUDE THE RESTORATION OF ALL ITEMS AND FEATURES BY OWNER/DEVELOPER, OR OWNER/DEVELOPER'S RESPONSIBLE PARTIES, SUBJECT MUST BE REMOVED AND FILLED WITH APPROVED FILL MATERIAL, COMPACTED AS THE GEOTECHNICAL REPORT DIRECTS. EARTHWORK ACTIVITIES INCLUDING, BUT NOT LIMITED TO, EXCAVATION, BACKFILL AND COMPACTING MUST COMPLY WITH THE RECOMMENDATIONS IN THE GEOTECHNICAL REPORT AND ALL STATUTES, REGULATIONS, STANDARDS AND ORDINANCES AND CODES. EARTHWORK ACTIVITIES MUST COMPLY WITH THE STANDARD STATE DOT SPECIFICATIONS FOR BRIDGE AND ROADWAY CONSTRUCTION (LATEST EDITION) AND ANY AMENDMENTS TO SAME.
6. IN THE EVENT OF A DISCREPANCY(IES) AND/OR A CONFLICT(S) BETWEEN PLANS, OR RELATIVE TO OTHER PLANS, THE GRADING PLAN TAKES PRECEDENCE AND CONTROLS. THE CONTRACTOR MUST IMMEDIATELY NOTIFY THE PROFESSIONAL OF RECORD AND BOHLER, IN WRITING, OF ANY DISCREPANCIES OR CONFLICTS.
7. THE CONTRACTOR IS RESPONSIBLE TO IMPORT FILL OR EXPORT EXCESS MATERIAL AS NECESSARY TO CONFORM TO THE PROPOSED GRADING, AND TO BACKFILL EXCAVATIONS FOR THE INSTALLATION OF UNDERGROUND IMPROVEMENTS.

ACCESSIBILITY DESIGN GUIDELINES

(Rev. 1/2023)

1. ALL ACCESSIBLE (A.K.A. ADA) COMPONENTS AND ACCESSIBLE ROUTES MUST BE CONSTRUCTED TO MEET, AT A MINIMUM, THE MORE STRINGENT OF: (A) THE REQUIREMENTS OF THE "AMERICANS WITH DISABILITIES ACT" (ADA) CODE (42 U.S.C. § 12101 ET SEQ. AND 42 U.S.C. § 4151 ET SEQ.), AND (B) ANY APPLICABLE LOCAL AND STATE GUIDELINES, AND ANY AND ALL AMENDMENTS TO BOTH THE ADA AND THE APPLICABLE LOCAL AND STATE GUIDELINES.
2. THE CONTRACTOR MUST REVIEW ALL CONSTRUCTION DOCUMENTS REFERENCED IN THESE NOTES FOR ACCURACY, COMPLIANCE AND CONSISTENCY WITH INDUSTRY GUIDELINES.
3. THE CONTRACTOR MUST EXERCISE APPROPRIATE CARE AND PRECISION IN CONSTRUCTION OF ACCESSIBLE (ADA) COMPONENTS AND ACCESSIBLE ROUTES FOR THE SITE. FINISHED SURFACES ALONG THE ACCESSIBLE ROUTE OF TRAVEL FROM PARKING REQUIREMENTS AND ALL TRANSITIONS BETWEEN ADJACENT SURFACES, INCLUDING AT POINTS OF ACCESSIBLE BUILDING ENTRANCE/EXIT, MUST COMPLY WITH THE ACCESSIBLE GUIDELINES AND REQUIREMENTS WHICH INCLUDE, BUT ARE NOT LIMITED TO THE FOLLOWING:
   A. ACCESSIBLE PARKING SPACES AND ACCESS AISLES SLOPES MUST NOT EXCEED 1:50 (2.0%) IN ANY DIRECTION.
   B. PATH OF TRAVEL ALONG ACCESSIBLE ROUTE MUST PROVIDE A 36-INCHES MINIMUM WIDTH (48-INCHES PREFERRED), OR AS SPECIFIED WITH MUNICIPAL OR JURISDICTIONAL AGENCY. UNOBSTRUCTED HEADROOM (CAR OVERHANGS) MUST PROVIDE A MINIMUM WIDTH OF 80-INCHES MINIMUM WIDTH. THE SLOPE MUST NOT EXCEED 1:20 (5.0%) IN THE DIRECTION OF TRAVEL AND MUST NOT EXCEED 1:50 (2.0%) IN CROSS SLOPE. WHERE ACCESSIBLE PATH OF TRAVEL IS GREATER THAN 1:20 (5.0%), AN ACCESSIBLE RAMP MUST BE INSTALLED. SITE IS STEADILY ALONG THE ACCESSIBLE PATH OF TRAVEL OR, CREATES A SERIES OF RISES OR VERTICAL CHANGES OF UP TO 1/2-INCH ARE PERMITTED ONLY IF THEY INCLUDES A 1/4-INCH BEVEL AT A SLOPE NOT STEEPER THAN 1:2 NO VERTICAL CHANGES OVER 1/4-INCH ARE PERMITTED.
   C. ACCESSIBLE RAMPS MUST NOT EXCEED A SLOPE OF 1:12 (8.3%) AND A RISE OF 30-INCHES. LEVEL LANDINGS MUST BE PROVIDED AT EACH END OF ACCESSIBLE RAMPS. LANDING MUST PROVIDE POSITIVE DRAINAGE AWAY FROM STRUCTURES, AND MUST NOT EXCEED 1:50 (2.0%) SLOPE IN THE DIRECTION OF TRAVEL. IN THE DIRECTION, RAMPS, THE APPLICABLE UTILITY LANDINGS MUST HAVE A CLEAR LANDING OF A MINIMUM OF 60-INCHES BY 60-INCHES. HAND RAILS ON BOTH SIDES OF THE RAMP MUST BE PROVIDED ON AN ACCESSIBLE RAMP WITH A RISE GREATER THAN 6-INCHES.
   D. ACCESSIBLE CURB RAMPS MUST NOT EXCEED A SLOPE OF 1:12 (8.3%). WHERE FLARED SIDES ARE PROVIDED, THEY MUST NOT EXCEED 1:10 (10%) SLOPE. LEVEL LANDING MUST BE PROVIDED AT RAMPS TOP AT A MINIMUM OF 36-INCHES LONG (48-INCHES PREFERRED). IN ALTERATIONS, WHEN THERE IS NO LANDING AT THE TOP, A SLOPE NOT EXCEEDING 1:12 (8.3%) MAY BE PROVIDED.
   E. DOORWAY LANDING AREAS MUST BE PROVIDED ON THE EXTERIOR SIDE OF ANY DOOR LEADING TO AN ACCESSIBLE PATH OF TRAVEL. THIS LANDING MUST BE SLOPED AWAY FROM THE DOOR NO MORE THAN 1:50 (2.0%) FOR POSITIVE DRAINAGE. THIS LANDING AREA MUST BE NO FEWER THAN 60-INCHES (5 FEET) LONG, EXCEPT WHERE OTHERWISE CLEARLY PERMITTED BY ACCESSIBLE GUIDELINES AND THE APPLICABLE LOCAL JURISDICTIONAL SERVICE PROVIDER. (CAR OVERHANGS MUST NOT BE CONSIDERED AS REFERENCES INCORPORATED BY CODE).
   F. WHEN THE PROPOSED CONSTRUCTION INVOLVES RECONSTRUCTION, MODIFICATION, REVISION OR EXTENSION OF OR TO ACCESSIBLE COMPONENTS FROM EXISTING DOORWAYS OR SURFACES, THE CONTRACTOR MUST VERIFY ALL EXISTING ELEVATIONS SHOWN ON THE PLAN. NOTE THAT TABLE 405.2 OF THE DEPARTMENT OF JUSTICE'S ADA STANDARDS FOR ACCESSIBLE DESIGN ALLOWS FOR ISOLATED OR ADDITIVE NON-COMPLIANCE. THE CONTRACTOR MUST IMMEDIATELY NOTIFY THE PROFESSIONAL OF RECORD AND BOHLER, IN WRITING, OF ANY DISCREPANCIES AND/OR FIELD CONDITIONS THAT DIFFER IN ANY WAY FROM THOSE SHOWN ON THE PLANS BEFORE COMMENCING ANY WORK. CONSTRUCTED IMPROVEMENTS MUST FALL WITHIN THE MAXIMUM AND MINIMUM LIMITATIONS IMPOSED BY THE BARRIER FREE REGULATIONS AND THE ACCESSIBLE GUIDELINES.
   G. THE CONTRACTOR M

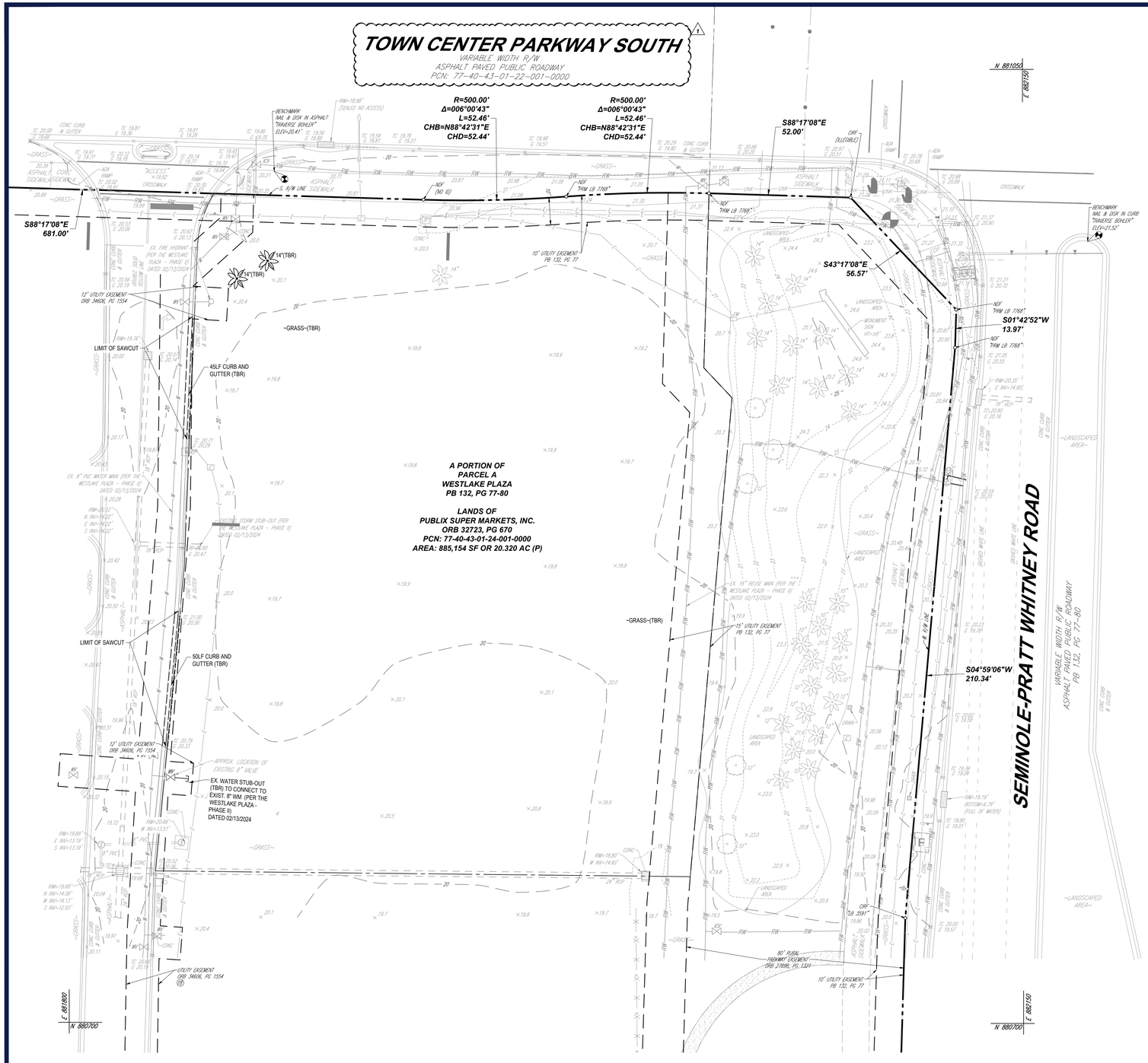

LEGEND

EXISTING CONDITIONS / DEMOLITION PLAN	
ONSITE PROPERTY LINE / R.O.W. LINE	
LEASE PROPERTY LINE	
EX. EASEMENT	
EX. ROADWAY C/L	
EX. OVERHEAD ELECTRIC	OH
EX. STORM SEWER	
EX. SANITARY LINE	S
EX. WATER LINE	W
EX. RECLAIM WATER LINE	RW
EX. FENCE	X
EX. SPOT ELEVATION	IE 59.4 / GE 59.4
EX. TREE	14" PINE
TO BE REMOVED/ TO BE RELOCATED	(TBR)(TBRL)
EX. TREE TO BE REMOVED	14" PINE

DEMOLITION NOTES

1. BOHLER ENGINEERING FL, LLC IS NOT RESPONSIBLE FOR JOB SITE SAFETY OR SUPERVISION. CONTRACTOR IS TO PROCEED WITH THE DEMOLITION IN A SYSTEMATIC AND SAFE MANNER, FOLLOWING ALL THE OSHA REQUIREMENTS, TO ENSURE PUBLIC AND CONTRACTOR SAFETY.
2. ALL DEMOLITION ACTIVITIES ARE TO BE PERFORMED IN ACCORDANCE WITH THESE PLANS AND SPECIFICATIONS AS WELL AS ALL FEDERAL, STATE, AND LOCAL REGULATIONS. ANY DISCREPANCIES OR DEVIATIONS SHALL BE IDENTIFIED BY THE CONTRACTOR TO BOHLER FL, LLC IN WRITING FOR RESOLUTION PRIOR TO INITIATION OF SITE ACTIVITY.
3. PRIOR TO STARTING ANY DEMOLITION CONTRACTOR IS RESPONSIBLE FOR/TO:
   A. THE CONTRACTOR SHALL OBTAIN A SUNSHINE STATE ONE CALL LOCATION CERTIFICATION PRIOR TO ANY EXCAVATION OR DEMOLITION. THE NUMBER IS 1-800-432-4770.
   B. ENSURING COPIES OF ALL PERMITS AND APPROVALS MUST BE MAINTAINED ON SITE AND AVAILABLE FOR REVIEW.
   C. INSTALLING THE REQUIRED SOIL EROSION AND SEDIMENT CONTROL MEASURES PRIOR TO SITE DISTURBANCE.
   D. LOCATE/CAP ALL UTILITIES AND SERVICES, INCLUDING BUT NOT LIMITED TO GAS, WATER, ELECTRIC, SANITARY AND STORM SEWER, TELEPHONE, CABLE, FIBER OPTIC CABLE, ETC. WITHIN THE LIMITS OF DISTURBANCE.
   E. PROTECTING AND MAINTAINING IN OPERATION, ALL ACTIVE SYSTEMS THAT ARE NOT BEING REMOVED DURING ALL DEMOLITION ACTIVITIES.
   F. FAMILIARIZING THEMSELVES WITH THE APPLICABLE UTILITY SERVICE PROVIDER AND BEING RESPONSIBLE FOR ALL COORDINATION REGARDING UTILITY DEMOLITION REQUIRED FOR THE PROJECT. THE CONTRACTOR SHALL PROVIDE THE OWNER WRITTEN NOTIFICATION THAT THE EXISTING UTILITIES AND SERVICES HAVE BEEN TERMINATED AND ABANDONED IN ACCORDANCE WITH JURISDICTION AND UTILITY COMPANY REQUIREMENTS.
   G. COORDINATION WITH UTILITY COMPANIES REGARDING WORKING "OFF-PEAK" HOURS OR ON WEEKENDS AS MAY BE REQUIRED TO MINIMIZE THE IMPACT ON THE AFFECTED PARTIES.
   H. A COMPLETE INSPECTION OF CONTAMINANTS BY A LICENSED ENVIRONMENTAL TESTING AGENCY, OF ALL BUILDINGS AND/OR STRUCTURES TO BE REMOVED. SAME SHALL BE PERFORMED IN ACCORDANCE WITH ALL APPLICABLE LOCAL, STATE, AND FEDERAL ENVIRONMENTAL REGULATIONS. ANY/ALL CONTAMINANTS SHALL BE REMOVED AND DISPOSED OF BY A FEDERALLY LICENSED CONTRACTOR IN ACCORDANCE WITH FEDERAL, STATE, AND LOCAL REGULATIONS. ALL ENVIRONMENTAL WORK INCLUDING HAZARDOUS MATERIAL, SOILS, ASBESTOS, OR OTHER REFERENCED OR IMPLIED HEREIN IS THE SOLE RESPONSIBILITY OF THE OWNER'S ENVIRONMENTAL CONSULTANT.
4. THE CONTRACTOR SHALL PROVIDE ALL THE "MEANS AND METHODS" NECESSARY TO PREVENT MOVEMENT, SETTLEMENT, OR COLLAPSE OF EXISTING STRUCTURES, AND ANY OTHER IMPROVEMENTS THAT ARE REMAINING ON OR OFF SITE. THE DEMOLITION CONTRACTOR IS RESPONSIBLE FOR ALL REPAIRS OF DAMAGE TO ALL ITEMS THAT ARE TO REMAIN AS A RESULT OF HIS ACTIVITIES. ALL REPAIRS SHALL USE NEW MATERIAL. THE REPAIRS SHALL RESTORE THE ITEM TO THE PRE-DEMOLITION CONDITION.
5. IN THE ABSENCE OF SPECIFICATIONS, THE CONTRACTOR SHALL PERFORM EARTH MOVEMENT ACTIVITIES, DEMOLITION AND REMOVAL OF ALL FOUNDATION WALLS, FOOTINGS, AND OTHER MATERIALS WITHIN THE LIMITS OF DISTURBANCE IN ACCORDANCE WITH DIRECTION BY OWNER'S STRUCTURAL OR GEOTECHNICAL ENGINEER.
6. EXPLOSIVES SHALL NOT BE USED WITHOUT PRIOR WRITTEN CONSENT OF BOTH THE OWNER AND APPLICABLE GOVERNMENTAL AUTHORITIES. ALL THE REQUIRED PERMITS AND PROCEDURES THAT ARE REQUIRED BY THE FEDERAL, STATE, AND LOCAL REGULATIONS SHALL BE IN PLACE PRIOR TO STARTING AN EXPLOSIVE PROGRAM. THE CONTRACTOR IS ALSO RESPONSIBLE FOR ALL INSPECTION AND SEISMIC VIBRATION TESTING THAT IS REQUIRED TO MONITOR THE EFFECTS ON ALL LOCAL STRUCTURES.
7. CONTRACTOR SHALL PROVIDE TRAFFIC CONTROL AND GENERALLY ACCEPTED SAFE PRACTICES IN CONFORMANCE WITH: THE "MANUAL ON UNIFORM TRAFFIC CONTROL" AS WELL AS FEDERAL, STATE, AND LOCAL REGULATIONS WHEN DEMOLITION RELATED ACTIVITIES IMPACT ROADWAYS OR ROADWAY RIGHT - OF - WAY.
8. CONDUCT DEMOLITION ACTIVITIES IN SUCH A MANNER TO ENSURE MINIMUM INTERFERENCE WITH ROADS, STREETS, SIDEWALKS, WALKWAYS, AND OTHER ADJACENT FACILITIES. STREET CLOSURE PERMITS MUST BE RECEIVED FROM THE APPROPRIATE GOVERNMENTAL AUTHORITY.
9. DEMOLITION ACTIVITIES AND EQUIPMENT SHALL NOT USE AREAS OUTSIDE THE DEFINED PROPERTY LINE WITHOUT WRITTEN PERMISSION OF THE OWNER, AND/OR APPROPRIATE GOVERNMENT AGENCY.
10. USE DUST CONTROL MEASURES TO LIMIT AIRBORNE DUST AND DIRT RISING AND SCATTERING IN THE AIR IN ACCORDANCE WITH FEDERAL, STATE, AND LOCAL REGULATIONS. AFTER THE DEMOLITION IS COMPLETE, ADJACENT STRUCTURES AND IMPROVEMENTS SHALL BE CLEANED OF ALL DUST AND DEBRIS CAUSED BY THE DEMOLITION OPERATIONS. THE CONTRACTOR IS RESPONSIBLE FOR RETURNING ALL ADJACENT AREAS TO THEIR "PRE-DEMOLITION" CONDITION.
11. CONTRACTOR IS RESPONSIBLE TO SAFEGUARD SITE AS NECESSARY TO PERFORM THE DEMOLITION IN SUCH A MANNER AS TO PREVENT THE ENTRY OF UNAUTHORIZED PERSONS AT ANY TIME.
12. THIS DEMOLITION PLAN IS INTENDED TO IDENTIFY THOSE EXISTING ITEMS/CONDITIONS WHICH ARE TO BE REMOVED. IT IS NOT INTENDED TO PROVIDE DIRECTION OTHER THAN THAT ALL METHODS AND MEANS ARE TO BE IN ACCORDANCE WITH FEDERAL, STATE, AND LOCAL REGULATIONS. THE CONTRACTOR SHALL BE RESPONSIBLE FOR ALL OSHA AND OTHER SAFETY PRECAUTIONS NECESSARY TO PROVIDE A SAFE WORK SITE.
13. DEBRIS SHALL NOT BE BURIED ON THE SUBJECT SITE. ALL DEMOLITION WASTES AND DEBRIS (SOLID WASTE) SHALL BE DISPOSED OF IN ACCORDANCE WITH ALL FEDERAL, STATE, AND LOCAL REGULATIONS AND APPLICABLE CODES.
14. CONTRACTOR IS RESPONSIBLE FOR FIELD VERIFYING ALL EXISTING SITE IMPROVEMENTS AND UTILITIES. ALL DISCREPANCIES SHALL BE IDENTIFIED TO THE ENGINEER IN WRITING.
15. ALL EXISTING UTILITIES BEING REMOVED SHALL BE DONE SO BY THE CONTRACTOR IN ACCORDANCE WITH STATE AND LOCAL REGULATIONS.
16. THERE ARE NO KNOWN WATER COURSES, WATER BODIES, FLOODPLAINS, XERIC UPLANDS, WETLANDS, CUTTHROAT GRASS SEEPS, HISTORICAL, AND ARCHAEOLOGICAL RESOURCES, OR CONES OF INFLUENCE FOR POTABLE WELLS, AQUIFER RECHARGE AREAS, SOIL TYPES, AND VEGETATIVE COVER LOCATED WITHIN PROJECT LIMITS.

DATUM NOTE

ELEVATIONS ARE BASED ON NAVD88 DATUM DETERMINED BY GPS OBSERVATIONS AND TIED IN TO THE NGS NO. DI8238 WITH A PUBLISHED ELEVATION OF 21.01 FEET.

FEMA NOTE

THE PROPERTY IS LOCATED IN OTHER AREAS ZONE X (AREAS DETERMINED TO BE OUTSIDE THE 0.2% ANNUAL CHANCE FLOODPLAIN) AND SPECIAL FLOOD HAZARD AREAS SUBJECT TO INUNDATION BY THE 1% ANNUAL CHANCE FLOOD ZONE AE (BASE FLOOD ELEVATIONS DETERMINED) PER MAP ENTITLED "FIRM FLOOD INSURANCE RATE MAP, PALM BEACH COUNTY, FLORIDA AND INCORPORATED AREAS, PANEL 345 OF 1200", MAP NUMBER 12099C0345F, WITH A MAP EFFECTIVE DATE OF OCTOBER 5, 2017.

THIS PLAN TO BE UTILIZED FOR DEMOLITION PURPOSES ONLY

20 10 5 0 20

SCALE: 1" = 20'

BOHLER™

SITE CIVIL AND CONSULTING ENGINEERING
LAND SURVEYING
PROGRAM MANAGEMENT
LANDSCAPE ARCHITECTURE
SUSTAINABLE DESIGN
PERMITTING SERVICES
TRANSPORTATION SERVICES

THE INFORMATION, DESIGN AND CONTENT OF THIS PLAN ARE COPYRIGHTED BY AND SHALL NOT BE REPRODUCED (EXCEPT FOR AIMP PURPOSE, WITHOUT PRIOR WRITTEN AUTHORIZATION FROM BOHLER. ONLY APPROVED, DATED AND SEALED PLANS SHALL BE UTILIZED FOR CONSTRUCTION PURPOSES.
© 2025 BOHLER

REVISIONS

REV	DATE	COMMENT	DRAWN BY / CHECKED BY
1	7/14/2025	1ST ROUND OF COMMENTS	AH / KD
2	8/11/2025	2ND ROUND OF COMMENTS	AH / KD
3	08/14/2025	QAQC COMMENTS	AH / KD
4	10/23/2025	3RD ROUND OF COMMENTS	KD / KD

811 KNOW WHAT'S BELOW ALWAYS CALL 811 BEFORE YOU DIG
It's fast. It's free. It's the law.
www.callsunshine.com

ISSUED FOR MUNICIPAL & AGENCY REVIEW & APPROVAL

THIS DRAWING IS INTENDED FOR MUNICIPAL AND/OR AGENCY REVIEW AND APPROVAL. IT IS NOT INTENDED AS A CONSTRUCTION DOCUMENT UNLESS INDICATED OTHERWISE.

PROJECT No.: FLA230191.00-0A
DRAWN BY: ~AH/MV~
CHECKED BY: ~KD/KM ~
DATE: 10/23/2025
CAD I.D.: P-CIVL-EXST

PROJECT:

SITE CONSTRUCTION PLANS

FOR

MAVIS TIRES & BRAKES
A DISCOUNT PRICES

MAVIS TIRES & BRAKES - CITY OF WESTLAKE

16775 PERSIMMON BLVD
WESTLAKE, FL 33470
CITY OF WESTLAKE
S 01, T 43S, R 40E

BOHLER™

600 N. WESTSHORE BLVD. SUITE 950
TAMPA, FLORIDA 33609
Phone: (813) 812-4100
Fax: (813) 812-4101

FLORIDA BUSINESS CERT. OF AUTH. No. 30780

This item has been digitally signed and sealed by Kayla M. Dedrick PE on the date adjacent to the seal. Signature must be verified on any electronic copies.

SHEET TITLE:

EXISTING CONDITIONS/ DEMOLITION PLAN

SHEET NUMBER:

C-201

REVISION 4 - 10/23/2025

Oct 23, 2025
H:\2023\FLA230191.00\ENGINEERING\CAD\DRAWINGS\PLAN SETS\CIVIL SITE PLAN\REV. 3\AP-CIVIL-EXST-FLA230191.00-0A----LAYOUT: C-201 EXDM
KO

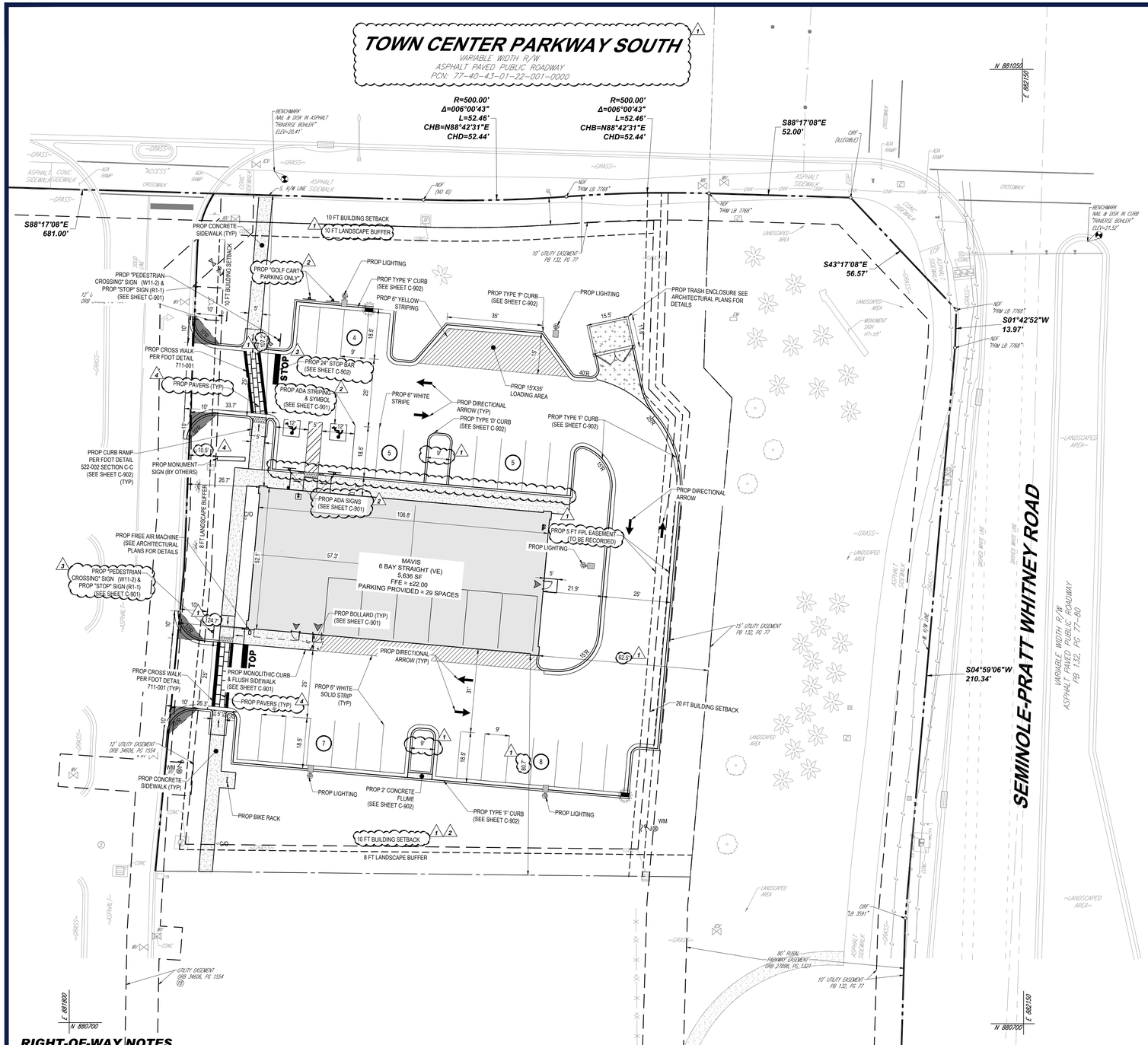

LEGEND

SITE PLAN

EX PROPERTY LINE	
LEASE PROPERTY LINE	
EX ADJACENT PROPERTY LINE	
EX ROAD CENTERLINE	
PROP PROPERTY LINE	
PROP BUFFER	
PROP SETBACK	
PROP PARKING COUNT	X
PROP SIGN	
PROP BUILDING ENTRANCE	
PROP CONCRETE SIDEWALK	
PROP HEAVY DUTY CONCRETE	
PROP PAVERS	

ZONING TABLE

ZONE: MIXED-USE (MU)
USE: AUTO REPAIR
SECTION 01, TOWNSHIP 43 SOUTH, RANGE 40 EAST

APPLICANT / OWNER INFORMATION

APPLICANT:	MAVIS SOUTHEAST, LLC 100 HILLSIDE AVENUE, WHITE PLAINS, NY 10603

PARCEL INFORMATION

PARCEL NUMBER:	77-40-43-01-24-001-0000
SITE ADDRESS:	16775 PERSIMMON BLVD WESTLAKE,FL 33470
JURISDICTION:	CITY OF WESTLAKE
FUTURE LAND USE:	DOWNTOWN MIXED USE
EXISTING LAND USE:	VACANT
PROPOSED LAND USE:	COMMERCIAL - AUTO REPAIR
FEMA ZONE:	ZONE X & ZONE AE

BULK REQUIREMENTS

ITEM	REQUIRED	PROPOSED
MIN. STRUCTURE SETBACKS		
FRONT	20FT	62.5FT
SIDE	INTERIOR SIDE:10 FT STREET SIDE: 20FT	INTERIOR SIDE: 80.7FT STREET SIDE: 107.2FT
REAR	10FT	24.7FT
MIN. LANDSCAPE SETBACKS		
FRONT	0FT	0FT
SIDE	INTERIOR SIDE:8 FT STREET SIDE: 10 FT	INTERIOR SIDE:8 FT STREET SIDE: 10 FT
REAR	8FT	8FT
PERMITTED HEIGHT	65FT	24FT 4IN
MAX. IMPERVIOUS SURFACE AREA RATIO (ISR)	75%	52%
ACCESS DRIVEWAY WIDTH	25FT	25FT

AREA CALCULATIONS

TOTAL PROJECT AREA	1.11 AC (48,352 SF)
EXISTING GREEN SPACE	1.11 AC (48,352 SF)
EXISTING POND AREA	0.00 AC (0 SF)
EXISTING TOTAL IMPERVIOUS AREA	0.00 AC (0 SF)
EXISTING BUILDING AREA	0.00 AC (0 SF)
EXISTING VUA AREA	0.00 AC (0 SF)
EXISTING IMPERVIOUS AREA	0.00 AC (0 SF)
PROPOSED GREEN SPACE	0.54 AC (23,505 SF)
PROPOSED POND AREA	0.00 AC (0 SF)
PROPOSED TOTAL IMPERVIOUS AREA	0.57 AC (24,847 SF)
PROPOSED BUILDING AREA	0.13 AC (5,636 SF)
PROPOSED VUA AREA	0.38 AC (16,597 SF)
PROPOSED OTHER IMPERVIOUS AREA	0.06 AC (2,614 SF)

PARKING CALCULATIONS

REGULAR PARKING SPACES PROVIDED	27 SPACES
TOTAL ADA SPACES PROVIDED	2 SPACES
TOTAL SPACES PROVIDED	29 SPACES
REQUIRED PARKING SPACES	1 SPACE PER 300 SF, PLUS 1 SPACE PER SERVICE BAY FOR REPAIR PLUS 1 SPACE PER 5,400 SF OF OUTDOOR STORAGE (25 PARKING SPACES)

SITE NOTES

1. THE PROPOSED ACTIVITIES SHALL COMPLY WITH CITY OF WESTLAKE DEVELOPMENT REGULATIONS (LATEST EDITION) INCLUDING THE TREE AND LANDSCAPE CODE, STORM WATER MANAGEMENT REGULATIONS, AND FIRE CODES AT THE TIME OF PERMITTING.
2. SIDEWALKS TO BE PROVIDED AND BUILT IN ACCORDANCE WITH F.D.O.T. AND CITY OF WESTLAKE LAND DEVELOPMENT REGULATIONS (LATEST EDITION). ALL PROPOSED SIDEWALKS SHALL MEET ADA REQUIREMENTS.
3. ALL DIMENSIONS ARE SHOWN AT FACE OF CURB, UNLESS OTHERWISE NOTED. B/C INDICATES DIMENSION IS TO BACK OF CURB.
4. ALL RADII DIMENSIONS ARE 3' AT THE FACE OF CURB UNLESS OTHERWISE NOTED.
5. FREE STANDING SIGNAGE SHOWN ONLY FOR REPRESENTATIONAL PURPOSES, AND SHALL BE PERMITTED SEPARATELY.
6. A RIGHT-OF-WAY PERMIT WILL BE REQUIRED FOR ALL WORK WITHIN THE PUBLIC RIGHT-OF-WAY. SPECIFIC STIPULATIONS OR CONDITIONS WILL BE IMPOSED AT THE TIME OF PERMIT APPLICATION.
7. CONSTRUCTION PLAN APPROVAL DOES NOT EXEMPT THE CONTRACTOR FROM OBTAINING THE REQUIRED BUILDING, ELECTRICAL, PLUMBING, AND MECHANICAL PERMITS. THESE INCLUDE BUT ARE NOT LIMITED TO ANY STRUCTURE, SIGN, WALL, ENCLOSURE, OR SCREENING, ETC.
8. IN THE EVENT THE PROJECT IS TERMINATED PRIOR TO CONSTRUCTION COMPLETION, THE PROJECT SHALL BE BROUGHT TO GRADE, SEEDED, AND ALL DEBRIS AND MATERIALS SHALL BE HAULED OFF-SITE AND DUMPED AT A STATE OF FLORIDA APPROVED FACILITY.
9. ANY DAMAGED SIDEWALK OR CURB WITHIN THE F.D.O.T. RIGHT-OF-WAY SHALL BE REMOVED AND REPLACED.
10. ALL DISTURBED AREAS WITHIN THE F.D.O.T. RIGHT-OF-WAY WILL BE SODDED.
11. STANDARD INDICES REFER TO THE LATEST VERSION OF F.D.O.T. "ROADWAY AND TRAFFIC DESIGN STANDARDS."
12. NO LANE CLOSURES ARE ALLOWED BETWEEN 5:00 A.M. AND 7:30 P.M. THE F.D.O.T. RESERVES THE RIGHT TO REQUIRE DIFFERENT HOURS OF LANE CLOSURE. ALL LANE CLOSURES MUST BE APPROVED BY THE DEPARTMENT AT LEAST TWO WEEKS PRIOR TO THE LANE CLOSURE IN ACCORDANCE WITH THE DISTRICT LANE CLOSURE POLICY.
13. ALL POTABLE WATER, RECLAIMED WATER, AND SANITARY SEWER CONSTRUCTION SHALL BE IN ACCORDANCE WITH THE APPROVED CONSTRUCTION PLAN.
14. FDEP WATER AND WASTEWATER PERMITS MUST BE OBTAINED PRIOR TO BEGINNING CONSTRUCTION.
15. PROPER DOCUMENTATION FOR ALL PUBLIC UTILITY EASEMENTS SHALL BE PROVIDED TO THE PROPERTY MANAGEMENT DEPARTMENT PRIOR TO CERTIFICATE OF COMPLETION.
16. UTILITY RECORD DRAWINGS ARE REQUIRED PRIOR TO PLACING THIS WATER AND WASTEWATER FACILITIES INTO SERVICE. PLEASE SEE THE ADDITIONAL INFORMATION SECTION FOR INSTRUCTIONS.

THIS PLAN TO BE UTILIZED FOR SITE LAYOUT PURPOSES ONLY

20 10 5 0 20
SCALE: 1" = 20'

RIGHT-OF-WAY NOTES

1. A RIGHT-OF-WAY USE PERMIT WILL BE REQUIRED FOR ALL WORK WITHIN THE PUBLIC RIGHT-OF-WAY. SPECIFIC STIPULATIONS OR CONDITIONS WILL BE IMPOSED AT THE TIME OF PERMIT APPLICATION.
2. ALL AREAS WITHIN THE COUNTY OR F.D.O.T. RIGHT-OF-WAY DISTURBED THROUGH THE COURSE OF CONSTRUCTION WILL BE RE-GRADED AND SODDED.
3. IT SHALL BE THE DEVELOPER'S RESPONSIBILITY TO PROTECT ALL COUNTY OR F.D.O.T. OWNED AND/OR MAINTAINED INFRASTRUCTURE. ANY/ALL COSTS ASSOCIATED WITH ALTERATIONS, RELOCATIONS, OR REPAIRS MADE NECESSARY BY THIS DEVELOPMENT SHALL BE BORNE BY EITHER THE OWNER, DEVELOPER, AND/OR CONTRACTOR. SPLICES IN THE FIBER OPTIC CABLE, SIGNALIZATION OR ROADWAY LIGHTING CONDUCTORS, OR THE ADDITION OF ADDITIONAL PULL/JUNCTION BOXES WILL NOT BE PERMITTED. IN THE EVENT A CABLE IS CUT, DAMAGED, OR REQUIRES RELOCATION, THE CABLE(S) SHALL BE RESTORED BACK TO THE ORIGINAL CONFIGURATION. ORIGINAL CONFIGURATION IS DEFINED AS SYSTEM STATUS, LAYOUT, AND DESIGN PRIOR TO ANY WORK COMMENCING.
4. FOR UTILITIES TO BE RELOCATED BY THE UTILITY PROVIDER, CONTRACTOR SHALL COORDINATE DEMOLITION SCHEDULE WITH UTILITY PROVIDERS. DEMOLITION OF SIDEWALKS AND DRIVEWAYS SHALL OCCUR PRIOR TO UTILITY RELOCATIONS.

ADA ACCESSIBILITY NOTES

1. ALL HANDICAPPED PARKING SPACES AND ACCESS AISLES ADJACENT TO THE HANDICAP PARKING SPACES SHALL HAVE A MAXIMUM OF 2% SLOPE IN ALL DIRECTIONS (THIS INCLUDES RUNNING SLOPE AND CROSS SLOPE).
2. AN ACCESSIBLE ROUTE FROM THE PUBLIC STREET OR SIDEWALK TO PRIMARY BUILDING ENTRANCES MUST BE PROVIDED. THIS ACCESSIBLE ROUTE SHALL BE A MINIMUM OF 60" WIDE. THE RUNNING SLOPE OF AN ACCESSIBLE ROUTE SHALL NOT EXCEED 5% AND THE CROSS SLOPE SHALL NOT EXCEED 2%.
3. SLOPES EXCEEDING 5% BUT LESS THAN 8% WILL REQUIRE A RAMP AND MUST CONFORM TO THE REQUIREMENTS FOR RAMP DESIGN (HANDRAILS, CURBS, LANDINGS). NO RAMP SHALL EXCEED AN 8% RUNNING SLOPE OR 2% CROSS SLOPE.
4. IN THE CASE THAT A NEW SIDEWALK WILL BE CONSTRUCTED IN THE ROW OF A SITE, THE RUNNING SLOPE OF THE SIDEWALK SHALL NOT EXCEED 5% AND THE CROSS SLOPE SHALL NOT EXCEED 2%. THIS STANDARD APPLIES TO CROSS WALKS IN THE DRIVEWAY AS WELL AND WILL REQUIRE SPECIAL ATTENTION DURING STAKING TO MAKE SURE THE 2% CROSS SLOPE IS MET IN THE CROSS WALK.
5. IT WILL BE THE RESPONSIBILITY OF THE GENERAL CONTRACTOR TO ENSURE THAT THE HANDICAP PARKING SPACES, ACCESSIBLE ROUTES, AND SIDEWALKS/CROSSWALKS ARE CONSTRUCTED TO MEET ADA REQUIREMENTS.
6. ANY REQUIREMENTS LISTED ABOVE THAT CAN NOT BE MET SHALL BE BROUGHT TO THE ENGINEER'S ATTENTION IMMEDIATELY. ANYTHING NOT BUILT TO THE ABOVE STANDARDS WILL REQUIRE REMOVAL AND REPLACEMENT OF THE NON COMPLIANT AREAS AT THE GENERAL CONTRACTORS COST.

Oct 23, 2025
H:\2023\FLA230191.00\ENGINEERING\CAD\DRAWINGS\PLAN SETS\CIVIL SITE PLAN\REV. 5\AP-CIVIL-SITE-FLA230191.00-SA----\LAYOUT: C-301 SITE

BOHLER™
SITE CIVIL AND CONSULTING ENGINEERING
LAND SURVEYING
PROGRAM MANAGEMENT
LANDSCAPE ARCHITECTURE
SUSTAINABLE DESIGN
PERMITTING SERVICES
TRANSPORTATION SERVICES

THE INFORMATION, DESIGN AND CONTENT OF THIS PLAN ARE PROPRIETARY AND SHALL NOT BE COPIED OR USED FOR ANY PURPOSE WITHOUT PRIOR WRITTEN AUTHORIZATION FROM BOHLER. ONLY APPROVED, SIGNED AND SEALED PLANS SHALL BE UTILIZED OR CONSTRUCTION PURPOSES
© 2025 BOHLER

REVISIONS

REV	DATE	COMMENT	DRAWN BY / CHECKED BY
1	7/14/2025	1ST ROUND OF COMMENTS	AH KD
2	8/11/2025	2ND ROUND OF COMMENTS	AH KD
3	08/14/2025	QAQC COMMENTS	AH KD
4	10/23/2025	3RD ROUND OF COMMENTS	KD KD

811 KNOW WHAT'S BELOW ALWAYS CALL 811 BEFORE YOU DIG
It's fast. It's free. It's the law.
www.callsunshine.com

ISSUED FOR MUNICIPAL & AGENCY REVIEW & APPROVAL

THIS DRAWING IS INTENDED FOR MUNICIPAL AND/OR AGENCY REVIEW AND APPROVAL. IT IS NOT INTENDED AS A CONSTRUCTION DOCUMENT UNLESS INDICATED OTHERWISE.

PROJECT No.: FLA230191.00-0A
DRAWN BY: ~AH/MV~
CHECKED BY: ~KD/KM ~
DATE: 10/23/2025
CAD I.D.: P-CIVL-SITE

PROJECT:

SITE CONSTRUCTION PLANS

FOR

MAVIS TIRES & BRAKES - DISCOUNT PRICES

MAVIS TIRES & BRAKES - CITY OF WESTLAKE

16775 PERSIMMON BLVD
WESTLAKE, FL 33470
CITY OF WESTLAKE
S 01, T 43S, R 40E

BOHLER™
600 N. WESTSHORE BLVD. SUITE 950
TAMPA, FLORIDA 33609
Phone: (813) 812-4100
Fax: (813) 812-4101
FLORIDA BUSINESS CERT. OF AUTH. No. 30780

This item has been digitally signed and sealed by Kayla M. Dedrick PE on the date adjacent to the seal. Signature must be verified on any electronic copies.

SHEET TITLE:

SITE PLAN

SHEET NUMBER:

C-301

REVISION 4 - 10/23/2025

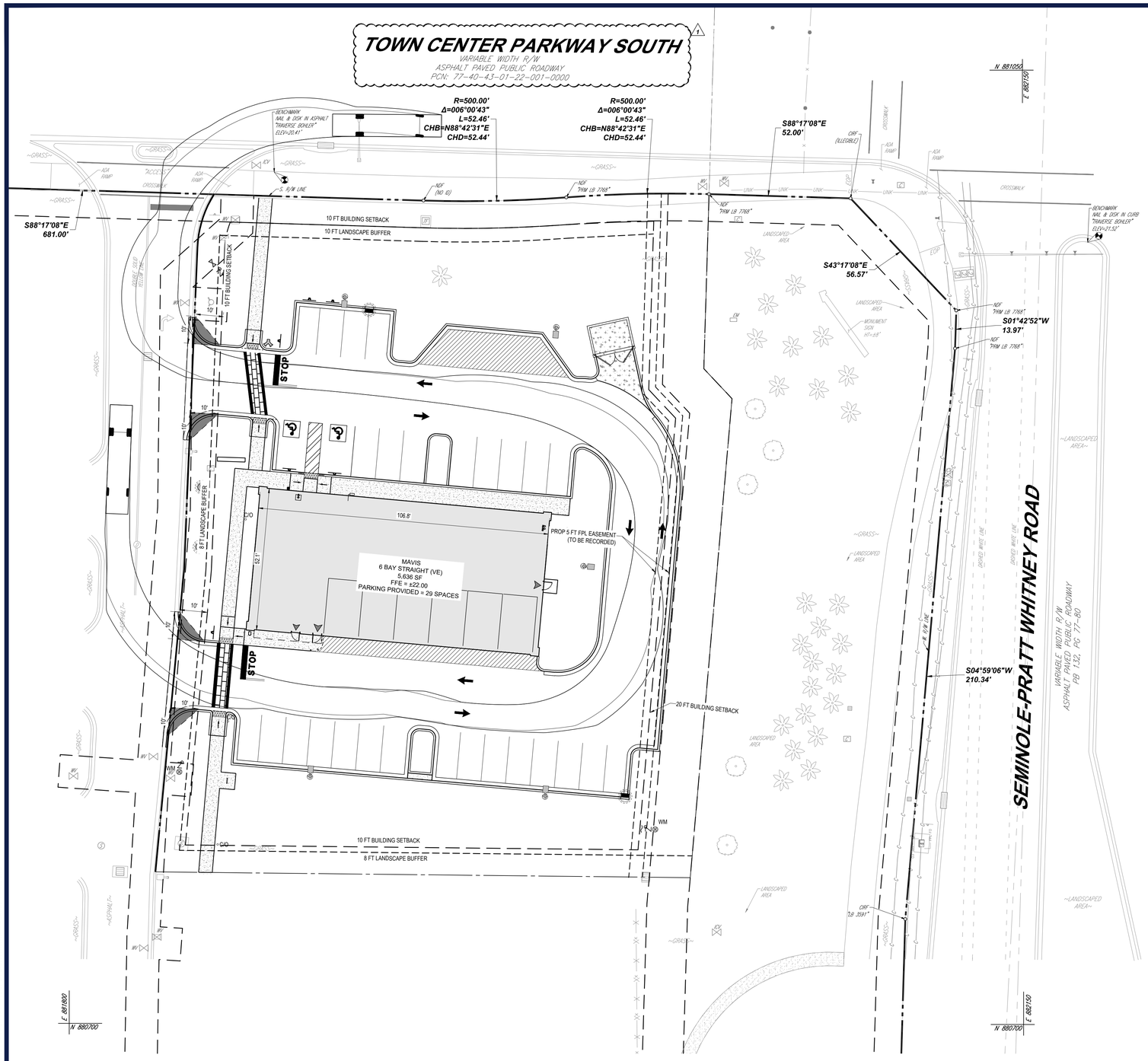

LEGEND

SITE PLAN	
EX PROPERTY LINE	
LEASE PROPERTY LINE	
EX ADJACENT PROPERTY LINE	
EX ROAD CENTERLINE	
PROP PROPERTY LINE	
PROP BUFFER	
PROP SETBACK	
PROP PARKING COUNT	X
PROP SIGN	
PROP BUILDING ENTRANCE	
PROP CONCRETE SIDEWALK	
PROP HEAVY DUTY CONCRETE	

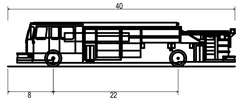

Pumper Fire Truck	
Overall Length	40.000ft
Overall Width	8.167ft
Overall Body Height	7.745ft
Min Body Ground Clearance	0.656ft
Track Width	8.167ft
Lock-to-lock time	5.00s
Max Wheel Angle	45.00°

THIS PLAN TO BE UTILIZED FOR SITE LAYOUT PURPOSES ONLY

20 10 5 0 20

SCALE: 1" = 20'

BOHLER™

SITE CIVIL AND CONSULTING ENGINEERING
LAND SURVEYING
PROGRAM MANAGEMENT
LANDSCAPE ARCHITECTURE
SUSTAINABILITY
PERMITTING SERVICES
TRANSPORTATION SERVICES

THE INFORMATION, DESIGN AND CONTENT OF THIS PLAN ARE COPYRIGHTED AND SHALL NOT BE REPRODUCED OR USED FOR ANY PURPOSE WITHOUT PRIOR WRITTEN AUTHORIZATION FROM BOHLER. ONLY APPROVED, SIGNED AND SEALED PLANS SHALL BE UTILIZED FOR CONSTRUCTION PURPOSES.
© 2025 BOHLER, INC.

REVISIONS

REV	DATE	COMMENT	DRAWN BY / CHECKED BY
1	7/14/2025	1ST ROUND OF COMMENTS	AH / KD
2	8/11/2025	2ND ROUND OF COMMENTS	AH / KD
3	08/14/2025	QAQC COMMENTS	AH / KD
4	10/23/2025	3RD ROUND OF COMMENTS	KD / KD

811 KNOW WHAT'S BELOW ALWAYS CALL 811 BEFORE YOU DIG
It's fast. It's free. It's the law.
www.callsunshine.com

ISSUED FOR MUNICIPAL & AGENCY REVIEW & APPROVAL

THIS DRAWING IS INTENDED FOR MUNICIPAL AND/OR AGENCY REVIEW AND APPROVAL. IT IS NOT INTENDED AS A CONSTRUCTION DOCUMENT UNLESS INDICATED OTHERWISE.

PROJECT No.:	FLA230191.00-0A
DRAWN BY:	~AH/MV~
CHECKED BY:	~KD/KM ~
DATE:	10/23/2025
CAD I.D.:	P-CIVL-SITE

PROJECT:

SITE CONSTRUCTION PLANS

FOR

MAVIS TIRES & BRAKES at DISCOUNT PRICES

MAVIS TIRES & BRAKES - CITY OF WESTLAKE

16775 PERSIMMON BLVD
WESTLAKE, FL 33470
CITY OF WESTLAKE
S 01, T 43S, R 40E

BOHLER™
600 N. WESTSHORE BLVD. SUITE 950
TAMPA, FLORIDA 33609
Phone: (813) 812-4100
Fax: (813) 812-4101
FLORIDA BUSINESS CERT. OF AUTH. No. 30780

This item has been digitally signed and sealed by Kayla M. Dedrick PE on the date adjacent to the seal. Signature must be verified on any electronic copies.

SHEET TITLE:

FIRE TRUCK TURN PLAN

SHEET NUMBER:

C-302

REVISION 4 - 10/23/2025

Oct 23, 2025
H:\2023\FLA230191.00\ENGINEERING\CAD\DRAWINGS\PLAN SETS\CIVL SITE PLAN\REV. 3\AP-CIVL-SITE-FLA230191.00-0A——3-LAYOUT: C-302 SITE
KD

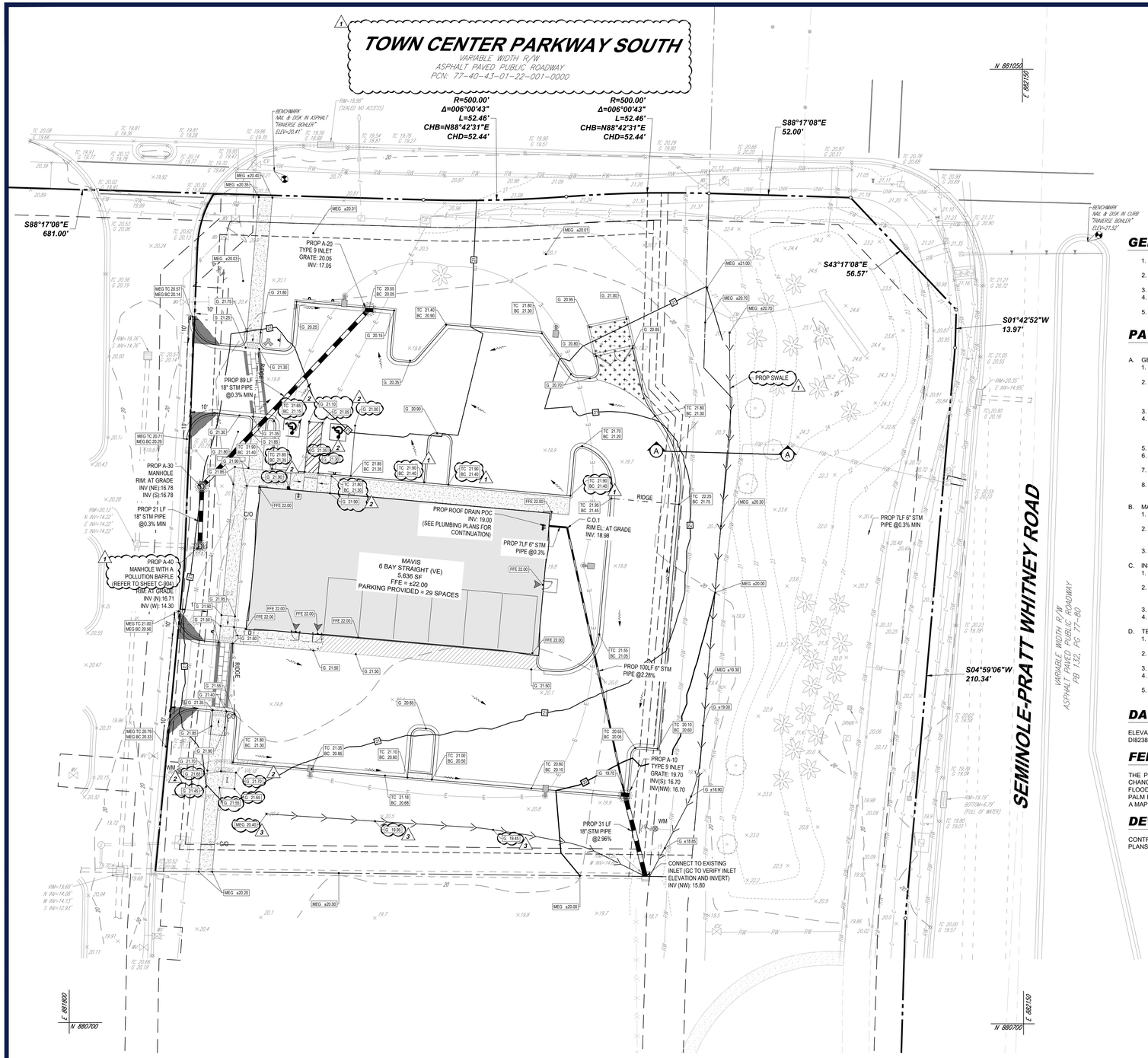

LEGEND

GRADING PLAN

PROPERTY LINE	
LEASE PROPERTY LINE	
PROP SPOT ELEVATION	G 39.99
EX STORM SEWER	
PROP STORM SEWER	
PROP GRATE INLET	
PROP STORM CLEANOUT	
PROP STORM MANHOLE	
RIDGE LINE	
SWALE LINE	
EX. BENCHMARK	
PROP CONCRETE SIDEWALK	
PROP STANDARD DUTY CONCRETE	
PROP HEAVY DUTY CONCRETE	
PROP STANDARD DUTY ASPHALT	
PROP HEAVY DUTY ASPHALT	

GENERAL NOTES

1. CONTRACTOR WILL BE RESPONSIBLE FOR VERIFYING THE LOCATION AND DEPTH OF ALL EXISTING UTILITIES PRIOR TO CONSTRUCTION.
2. CONTRACTOR SHALL SUBMIT SHOP DRAWINGS TO THE ENGINEER FOR REVIEW AND APPROVAL PRIOR TO CASTING STRUCTURES.
3. COORDINATE ALL UTILITY LEADS AND BUILDING CONNECTIONS WITH THE ARCHITECTURAL PLANS.
4. STANDARD INDEXES REFER TO THE LATEST EDITION OF F.D.O.T. "ROADWAY AND TRAFFIC DESIGN STANDARDS."
5. ALL DISTURBED AREAS WITHIN RIGHT-OF-WAY WILL NEED TO BE SODDED.

PAVING AND GRADING NOTES

A. GENERAL:
1. ALL ELEVATIONS SHOWN ARE IN REFERENCE TO THE SURVEYOR'S BENCHMARKS AND MUST BE VERIFIED BY THE GENERAL CONTRACTOR PRIOR TO GROUNDBREAK.
2. ALL GRADES SHOWN REFERENCE PROPOSED ELEVATIONS AT EDGE OF PAVEMENT, UNLESS OTHERWISE NOTED. "TC" = TOP OF CURB ELEVATION; "G" = FINISHED GRADE; "MEG" = PROPOSED GRADE TO MATCH EXISTING GRADE; T/W = TOP OF RETAINING WALL ELEVATION; B/W = BOTTOM OF RETAINING WALL ELEVATION.
3. THE ALTA/ACSM LAND TITLE SURVEY SHALL BE CONSIDERED A PART OF THESE PLANS.
4. THE GEOTECHNICAL REPORT AND RECOMMENDATIONS SET FORTH THEREIN ARE A PART OF THE REQUIRED CONSTRUCTION DOCUMENTS AND IN CASE OF CONFLICT SHALL TAKE PRECEDENCE UNLESS SPECIFICALLY NOTED OTHERWISE ON THE PLANS. THE CONTRACTOR SHALL NOTIFY THE ENGINEER IN WRITING OF ANY SUCH DISCREPANCY BETWEEN GEOTECHNICAL REPORT AND PLANS, ETC.
5. ALL UNDERGROUND UTILITIES SHALL BE COMPLETED PRIOR TO CONSTRUCTION OF LIMEROCK BASE.
6. ALL EXISTING PAVEMENT, CUT OR DAMAGED BY CONSTRUCTION, SHALL BE PROPERLY RESTORED AT THE CONTRACTOR'S EXPENSE.
7. WHERE ANY PROPOSED PAVEMENT IS TO BE CONNECTED TO EXISTING PAVEMENT, THE EXISTING EDGE OF PAVEMENT SHALL BE SAWCUT TO ENSURE A PROPER JOINT.
8. PRIOR TO CONSTRUCTION OR INSTALLATION, SHOP DRAWINGS SHALL BE SUBMITTED TO AND APPROVED BY THE ENGINEER OF RECORD. IT IS THE RESPONSIBILITY OF THE CONTRACTOR TO OBTAIN ALL OTHER AGENCY APPROVALS IF REQUIRED.

B. MATERIALS:
1. BASE COURSE SHALL BE ABC-3 PER F.D.O.T. SPECIFICATIONS OR EQUIVALENT LIMEROCK THICKNESS W/ MINIMUM LBR-100 (MAX. 6" LIFTS).
2. ASPHALT SURFACES SHALL BE TYPE S-III ASPHALTIC CONCRETE, UNLESS OTHERWISE SPECIFIED ON THE PLANS. SHALL BE A MINIMUM OF 1-1/2" THICK, AND SHALL BE CONSTRUCTED IN TWO 3/4" LIFTS, WITH TACKCOAT BETWEEN LIFTS.
3. REINFORCED CONCRETE SLABS SHALL BE CONSTRUCTED OF CLASS I CONCRETE WITH A MINIMUM STRENGTH OF 3,000 PSI AND SHALL BE REINFORCED WITH A 6" x 6" NO. 6 GAUGE WIRE MESH.

C. INSTALLATION:
1. SUBGRADE FOR ROADWAY SHALL BE COMPACTED TO A MINIMUM OF 98% OF THE MAXIMUM DENSITY (AASHTO T-180), SHALL BE A MINIMUM 12", AND SHALL HAVE A MINIMUM LBR 40.
2. BASE COURSE MATERIAL FOR PAVED AREAS SHALL BE A MINIMUM THICKNESS OF 6" PLACED IN ONE LIFT. ADDITIONALLY, BASE COURSE MATERIAL SHALL HAVE A MINIMUM MARSHALL STABILITY OF 1000, UNLESS OTHERWISE INDICATED (OR LBR-100).
3. BASE COURSE SHALL BE COMPACTED TO 98% OF THE MAXIMUM DENSITY AS PER AASHTO T-180.
4. INSTALLATION OF THE WEARING SURFACE SHALL CONFORM TO THE REQUIREMENTS OF THE D.O.T. STANDARD SPECIFICATIONS FOR TYPE S-III ASPHALTIC CONCRETE OR THE LATEST REVISION.

D. TESTING
1. THE FINISHED SURFACE OF THE BASE COURSE AND THAT OF THE WEARING SURFACE SHALL NOT VARY MORE THAN 1/4" FROM THE TEMPLATE. ANY IRREGULARITIES EXCEEDING THIS LIMIT SHALL BE CORRECTED.
2. DENSITY TESTS SHALL BE TAKEN BY AN INDEPENDENT TESTING LABORATORY CERTIFIED BY THE STATE OF FLORIDA, WHERE DIRECTED BY THE ENGINEER.
3. ALL TESTING COSTS (PAVING) SHALL BE PAID FOR BY THE CONTRACTOR.
4. DENSITY TESTS ON THE STABILIZED SUBGRADE SHALL BE SUPPLIED TO AND APPROVED BY THE ENGINEER OF RECORD AND GEOTECHNICAL ENGINEER BEFORE ANY BASE IS CONSTRUCTED.
5. DENSITY TESTS AND "AS-BUILTS" ON THE FINISHED BASE SHALL BE SUPPLIED TO AND APPROVED BY THE GEOTECHNICAL ENGINEER BEFORE ANY ASPHALT PAVEMENT IS CONSTRUCTED.

DATUM NOTE

ELEVATIONS ARE BASED ON NAVD88 DATUM DETERMINED BY GPS OBSERVATIONS AND TIED IN TO THE NGS NO. DI8238 WITH A PUBLISHED ELEVATION OF 21.01 FEET.

FEMA NOTE

THE PROPERTY IS LOCATED IN OTHER AREAS ZONE X (AREAS DETERMINED TO BE OUTSIDE THE 0.2% ANNUAL CHANCE FLOODPLAIN) AND SPECIAL FLOOD HAZARD AREAS SUBJECT TO INUNDATION BY THE 1% ANNUAL CHANCE FLOOD ZONE AE (BASE FLOOD ELEVATIONS DETERMINED) PER MAP ENTITLED "FIRM FLOOD INSURANCE RATE MAP, PALM BEACH COUNTY, FLORIDA AND INCORPORATED AREAS, PANEL 345 OF 1200", MAP NUMBER 12099C0345F, WITH A MAP EFFECTIVE DATE OF OCTOBER 5, 2017.

DEWATERING NOTE

CONTRACTOR SHALL SUBMIT DEWATERING PLAN TO THE DISTRICT 14 DAYS PRIOR TO COMMENCEMENT, SUBJECT PLANS SHALL BE REVISED AS NECESSARY.

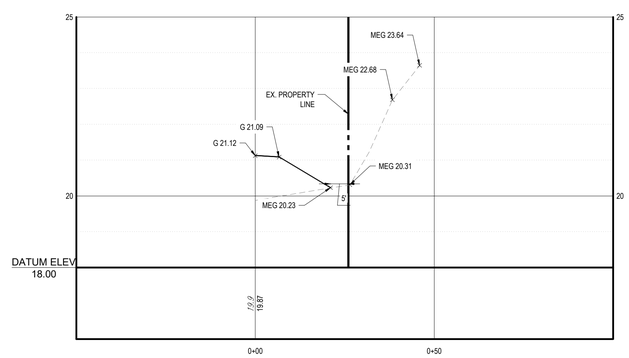

Section A-A

SCALE: 1"= 20 ' HORIZONTAL
1"= 2 ' VERTICAL

THIS PLAN TO BE UTILIZED FOR SITE GRADING PURPOSES ONLY

20 10 5 0 20

SCALE: 1" = 20'

BOHLER™

SITE CIVIL AND CONSULTING ENGINEERING
LAND SURVEYING
PROGRAM MANAGEMENT
LANDSCAPE ARCHITECTURE
SUSTAINABLE DESIGN
PERMITTING SERVICES
TRANSPORTATION SERVICES

THE INFORMATION, DESIGN AND CONTENT OF THIS PLAN ARE PROPRIETARY AND SHALL NOT BE REPRODUCED OR USED FOR ANY PURPOSE WITHOUT PRIOR WRITTEN AUTHORIZATION FROM BOHLER. ONLY APPROVED, SIGNED AND SEALED PLANS SHALL BE UTILIZED FOR CONSTRUCTION PURPOSES
© 2024 BOHLER, INC.

REVISIONS

REV	DATE	COMMENT	DRAWN BY / CHECKED BY
1	7/14/2025	1ST ROUND OF COMMENTS	AH / KD
2	8/11/2025	2ND ROUND OF COMMENTS	AH / KD
3	08/14/2025	QAQC COMMENTS	AH / KD
4	10/23/2025	3RD ROUND OF COMMENTS	KD / KD

811 KNOW WHAT'S BELOW ALWAYS CALL 811 BEFORE YOU DIG
It's fast. It's free. It's the law.
www.callsunshine.com

ISSUED FOR MUNICIPAL & AGENCY REVIEW & APPROVAL

THIS DRAWING IS INTENDED FOR MUNICIPAL AND/OR AGENCY REVIEW AND APPROVAL. IT IS NOT INTENDED AS A CONSTRUCTION DOCUMENT UNLESS INDICATED OTHERWISE.

PROJECT No.:	FLA230191.00-0A
DRAWN BY:	~AH/MV~
CHECKED BY:	~KD/KM ~
DATE:	10/23/2025
CAD I.D.:	P-CIVL-GRAD

PROJECT:

SITE CONSTRUCTION PLANS

FOR

MAVIS TIRES & BRAKES - CITY OF WESTLAKE
16775 PERSIMMON BLVD
WESTLAKE, FL 33470
CITY OF WESTLAKE
S 01, T 43S, R 40E

BOHLER™
600 N. WESTSHORE BLVD. SUITE 950
TAMPA, FLORIDA 33609
Phone: (813) 812-4100
Fax: (813) 812-4101
FLORIDA BUSINESS CERT. OF AUTH. No. 30780

This item has been digitally signed and sealed by Kayla M. Dedrick PE on the date adjacent to the seal. Signature must be verified on any electronic copies.

SHEET TITLE:

GRADING PLAN

SHEET NUMBER:

C-401

REVISION 4 - 10/23/2025

Oct 23, 2025
H:\2023\FLA230191.00\ENGINEERING\CAD\DRAWINGS\PLAN SETS\CIVIL SITE PLAN\REV. 0\AP-CIVIL-GRAD-FLA230191.00-0A-----%LAYOUT C-401 GRAD
KD

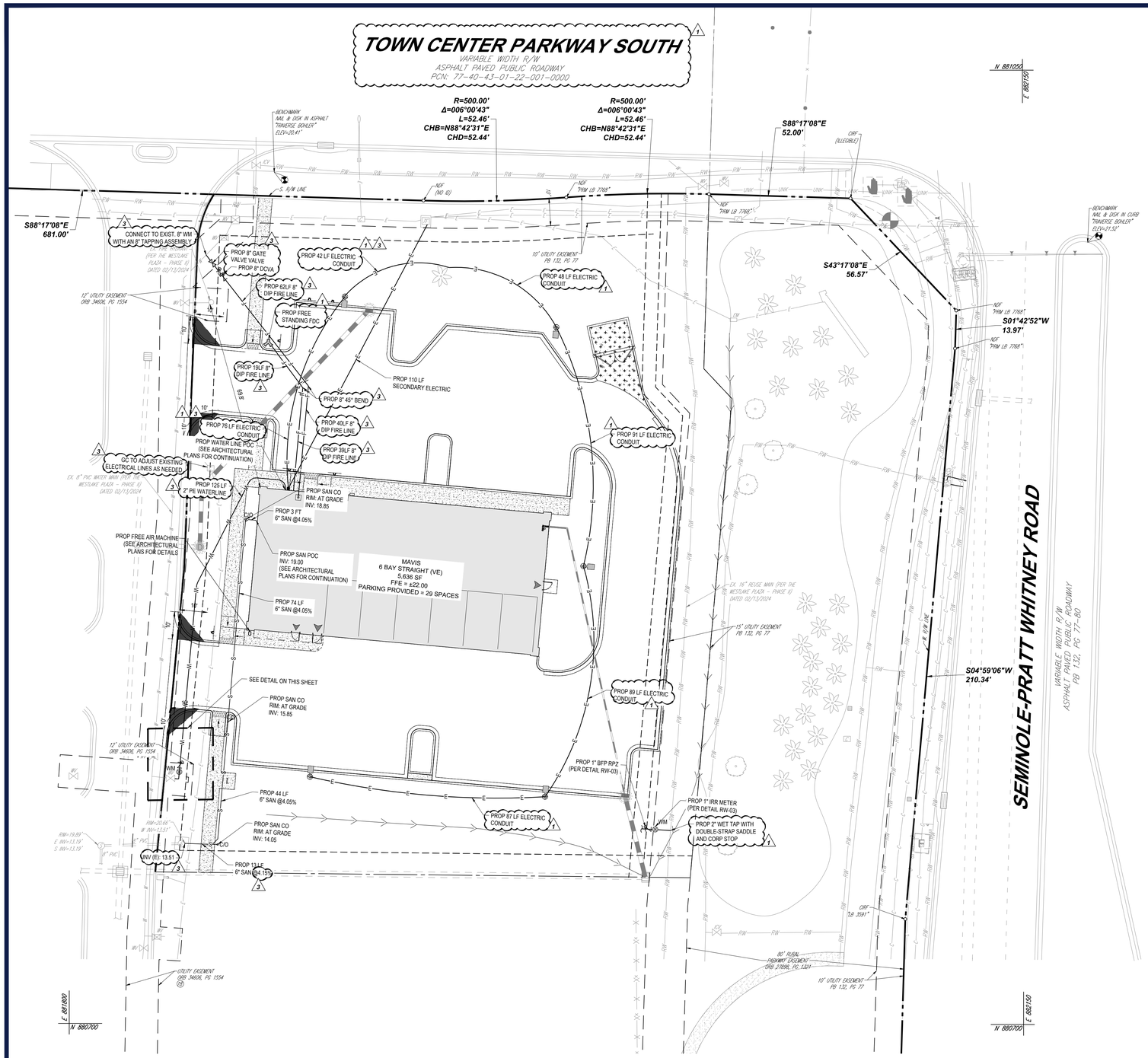

DATUM NOTE

ELEVATIONS ARE BASED ON NAVD88 DATUM DETERMINED BY GPS OBSERVATIONS AND TIED IN TO THE NGS NO. DI8238 WITH A PUBLISHED ELEVATION OF 21.01 FEET.

FEMA NOTE

THE PROPERTY IS LOCATED IN OTHER AREAS ZONE X (AREAS DETERMINED TO BE OUTSIDE THE 0.2% ANNUAL CHANCE FLOODPLAIN) AND SPECIAL FLOOD HAZARD AREAS SUBJECT TO INUNDATION BY THE 1% ANNUAL CHANCE FLOOD ZONE AE (BASE FLOOD ELEVATIONS DETERMINED) PER MAP ENTITLED "FIRM FLOOD INSURANCE RATE MAP, PALM BEACH COUNTY, FLORIDA AND INCORPORATED AREAS, PANEL 345 OF 1200", MAP NUMBER 12099C0345F, WITH A MAP EFFECTIVE DATE OF OCTOBER 5, 2017.

GENERAL NOTE

ALL ONSITE WATER AND SEWER DISTRIBUTION/COLLECTION LINES/MAINS TO BE PRIVATELY OWNED & MAINTAINED UNLESS OR UNTIL A UTILITY EASEMENT IS DESCRIBED & APPROVED BY ALL INVOLVED PARTIES.

SANITARY SEWER NOTES

A. GENERAL:
1. DISTANCE AND LENGTHS SHOWN ON PLANS AND PROFILE DRAWINGS ARE REFERENCED TO THE CENTER OF STRUCTURES.
2. PRIOR TO COMMENCING CONSTRUCTION, CONTRACTOR TO TELEVISE EXISTING SANITARY SEWER LINE FROM POINT OF CONNECTION THROUGH THE NEXT SEQUENTIAL DOWNSTREAM RUN OF PIPE. ADDITIONALLY, PRIOR TO COMPLETION OF CONSTRUCTION, CONTRACTOR SHALL TELEVISE THE NEWLY INSTALLED SANITARY SEWER MAIN TO ENSURE NO DIPS OR DEBRIS WITHIN LINE.
3. EXISTING SERVICES WITHIN MANHOLES SHALL BE RELOCATED TO NEW SEWER.
4. BYPASS PUMPING MAY BE REQUIRED AND SANITARY SERVICE MAINTAINED WHILE EXISTING SEWER IS BEING REPLACED.
5. CONTRACTOR WILL BE REQUIRED TO COORDINATE WITH CITY WITH MAKING CONNECTION TO PUMP STATION / MANHOLE.
6. CONTRACTOR MUST COORDINATE WITH CITY AND SHOPPING CENTER AND PROVIDE AT LEAST 48-HOURS NOTICE PRIOR TO REPLACING SERVICES.

B. MATERIALS:
1. ALL PVC SEWER PIPE AND FITTINGS SHALL BE NON-PRESSURE POLYVINYL CHLORIDE (PVC) PIPE CONFORMING TO ASTM D 3034, SDR 26, WITH PUSH-ON RUBBER GASKET JOINTS.
2. ALL FITTINGS AND ACCESSORIES SHALL BE AS MANUFACTURED OR SUPPLIED BY THE PIPE MANUFACTURER OR APPROVED EQUAL.
3. ALL SANITARY CLEANOUTS WITHIN PAVEMENT SHALL HAVE A LID THAT IS H20 LOADING.

C. INSTALLATION:
1. PIPE AND FITTINGS:
   a. SEWER PIPE SHALL BE INSTALLED IN ACCORDANCE WITH ASTM D2321, AND THE UNI-BELL PLASTICS PIPE ASSOCIATION'S 'RECOMMENDED PRACTICE FOR THE INSTALLATION OF PVC SEWER PIPE.'
   b. BEDDING AND INITIAL BACKFILL (12") OVER SEWER MAINS AND SERVICES SHALL BE SAND WITH NO ROCK LARGER THAN 1" IN DIAMETER. PEA ROCK OR 3/4 " WASHED ROCK WILL BE USED IN WATER OR WHERE UNSUITABLE BEDDING EXISTS. ALL OTHER FILL SHALL NOT HAVE ROCK LARGER THAN 6" IN DIAMETER.
2. CLEANOUTS:
   a. CLEANOUTS SHALL BE SET PLUMB TO LINE AND GRADE ON FIRM CLEAN SUBGRADE PROVIDING UNIFORM BEARING UNDER THE BASE.
   b. ALL OPENINGS AND JOINTS SHALL BE SEALED WATER-TIGHT.
3. SERVICE:
   a. MINIMUM SLOPE OF ALL SERVICE LINES SHALL BE 1.00%.
   b. EACH SERVICE CONNECTION SHALL BE PLUGGED WATER-TIGHT WITH AN APPROVED PLUG.
   c. CONNECTION OF SERVICES TO BUILDING'S PLUMBING SHALL BE COORDINATED WITH THE ARCHITECTURAL DRAWINGS.

D. TESTING:
1. AFTER CONSTRUCTION OF THE SEWER SYSTEM, THE ENGINEER MAY REQUIRE A VISUAL INFILTRATION AND/OR EXFILTRATION TEST TO BE PERFORMED ON THE ENTIRE SYSTEM OR ANY PART THEREOF.
2. AN AIR TEST MAY BE SUBSTITUTED FOR THE WATER EXFILTRATION TEST, UPON APPROVAL OF THE ENGINEER.
3. SEWER PIPE LEAKAGE ALLOWABLE SHALL NOT EXCEED 150 GALLONS PER DAY PER INCH DIAMETER PER MILE IN A TWO HOUR TEST PERIOD FOR ANY SECTION TESTED. NO VISIBLE LEAKAGE SHALL BE ALLOWED.
4. CONTRACTOR IS RESPONSIBLE FOR CORRECTING ANY DEFICIENCIES PRIOR TO THE CERTIFICATION TO ANY AGENCY.
5. GENERAL CONTRACTOR SHALL EMPLOY AN INDEPENDENT INSPECTOR FOR 100% CONTINUOUS INSPECTION OF THE BEDDING AND BACKFILL OPERATION. COMPACTION TEST SHALL BE TAKEN AT THE BOTTOM OF TRENCH AND AT EACH LIFT OF BACKFILL.
6. GENERAL CONTRACTOR SHALL EMPLOY A LICENSED SURVEYOR AS-BUILT TOP OF PIPE ELEVATIONS TAKEN WHEN BEDDING OPERATIONS IS 75% COMPLETE. THESE ELEVATIONS SHALL BE TAKEN AT POINTS OF CONNECTION, CHANGES IN DIRECTION AND AT MINIMUM 20' INTERVALS ALONG THE LENGTH OF THE PIPE. THESE ELEVATIONS SHALL BE RECORDED AS AS-BUILT DIMENSIONS ON SITE PLAN REVIEW BY PROJECT ENGINEER.
7. ALL SANITARY LINES ARE TO BE FLUSHED PRIOR TO CONTRACTOR TURNOVER OF THE FACILITY.

WATER DISTRIBUTION NOTES

1. CONTRACTOR SHALL FOLLOW GUIDELINES AND PROCEDURES OUTLINED BY UTILITY PROVIDER, AND HAVE UTILITY PROVIDER'S MANUAL ON-SITE AT ALL TIMES. THIS POLICY MANUAL SHALL BE CONSIDERED PART OF THE CONSTRUCTION DOCUMENTS AS IT PERTAINS TO APPROVED MATERIALS, INSTALLATION METHODS, INSPECTION NOTIFICATION, AND AS-BUILT/PROJECT CLOSEOUT REQUIREMENTS.
2. ALL HIGH DENSITY POLYETHYLENE PIPE AND FITTINGS SHALL MEET THE REQUIREMENTS OF AASHTO M - 294 LATEST REVISIONS. ALL PIPING TO BE NON-PERFORATED TUBING.
3. CONTRACTOR TO COORDINATE WITH COUNTY AND ADJACENT PROPERTY OWNERS AND BUSINESSES FOR ANY ANTICIPATED WATER INTERRUPTIONS FOR CONNECTION TO EXISTING WATER LINE.
4. CONTRACTOR TO DEFLECT OR BEND WATER LINES AS NECESSARY TO MAINTAIN 12" VERTICAL SEPARATION FROM STORM SEWER PER FLORIDA DEPARTMENT OF ENVIRONMENTAL PROTECTION.

SANITARY SEWER GRAVITY NOTES

1. IF REQUIRED, THE CONTRACTOR SHALL RECONSTRUCT THE BENCH IN THE EXISTING MANHOLE TO ACCOMMODATE THE NEW FLOW DIRECTION.
2. WASTEWATER FLOW IN THE EXISTING SEWER MUST BE MAINTAINED DURING THE INSTALLATION OF THE LATERAL. IF A BY-PASS IS REQUIRED, THE CONTRACTOR MUST SUBMIT DETAILS OF THE SYSTEM FOR REVIEW AND APPROVAL TO THE CITY OF WESTLAKE PUBLIC WORKS DEPARTMENT PRIOR TO STARTING CONSTRUCTION.

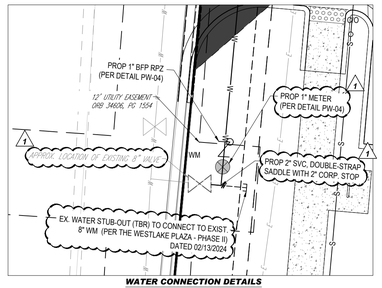

WATER CONNECTION DETAILS

SCALE: 1" = 10'

THIS PLAN TO BE UTILIZED FOR UTILITIES PURPOSES ONLY

SCALE: 1" = 20'

LEGEND

UTILITY PLAN

LEASE PROPERTY LINE	
EX. UNDERGROUND WATER LINE	W W
EX. UNDERGROUND ELECTRIC LINE	E E
EX. STORM SEWER	
EX. SANITARY SEWER MAIN	S S
EX. FORCE MAIN	FM FM
EX. OVERHEAD LINE	OH OH
EX. SANITARY MANHOLE	S
PROP UNDERGROUND WATER LINE	W W
PROP UNDERGROUND ELECTRIC LINE	E E
PROP STORM SEWER	
PROP SANITARY SEWER MAIN	S S
PROP TELECOM	T T
PROP OVERHEAD LINE	OH OH
PROP SANITARY CLEANOUT	
PROP BACKFLOW PREVENTER	
PROP WATER METER	METER
PROP WATER VALVE	WV
PROP GREASE TRAP	S S

BOHLER™

SITE CIVIL AND CONSULTING ENGINEERING
LAND SURVEYING
PROGRAM MANAGEMENT
LANDSCAPE ARCHITECTURE
SUSTAINABILITY
PERMITTING SERVICES
TRANSPORTATION SERVICES

THE INFORMATION, DESIGN AND CONTENT OF THIS PLAN ARE COPYRIGHTED AND SHALL NOT BE REPRODUCED OR USED FOR ANY PURPOSE WITHOUT PRIOR WRITTEN AUTHORIZATION FROM BOHLER. ONLY APPROVED, SIGNED AND SEALED PLANS ARE TO BE USED FOR CONSTRUCTION PURPOSES.
© 2024 BOHLER, INC.

REVISIONS

REV	DATE	COMMENT	DRAWN BY / CHECKED BY
1	7/14/2025	1ST ROUND OF COMMENTS	AH / KD
2	8/11/2025	2ND ROUND OF COMMENTS	AH / KD
3	08/14/2025	QAQC COMMENTS	AH / KD
4	10/23/2025	3RD ROUND OF COMMENTS	KD / KD

811 KNOW WHAT'S BELOW ALWAYS CALL 811 BEFORE YOU DIG
It's fast. It's free. It's the law.
www.callsunshine.com

ISSUED FOR MUNICIPAL & AGENCY REVIEW & APPROVAL

THIS DRAWING IS INTENDED FOR MUNICIPAL AND/OR AGENCY REVIEW AND APPROVAL. IT IS NOT INTENDED AS A CONSTRUCTION DOCUMENT UNLESS INDICATED OTHERWISE.

PROJECT No.: FLA230191.00-0A
DRAWN BY: ~AH/MV~
CHECKED BY: ~KD/KM ~
DATE: 10/23/2025
CAD I.D.: P-CIVL-UTIL

PROJECT:

SITE CONSTRUCTION PLANS

FOR

MAVIS TIRES & BRAKES - CITY OF WESTLAKE
16775 PERSIMMON BLVD
WESTLAKE, FL 33470
CITY OF WESTLAKE
S 01, T 43S, R 40E

BOHLER™
600 N. WESTSHORE BLVD. SUITE 950
TAMPA, FLORIDA 33609
Phone: (813) 812-4100
Fax: (813) 812-4101
FLORIDA BUSINESS CERT. OF AUTH. No. 30780

This item has been digitally signed and sealed by Kayla M. Dedrick PE on the date adjacent to the seal. Signature must be verified on any electronic copies.

SHEET TITLE:

UTILITY PLAN

SHEET NUMBER:

C-501

REVISION 4 - 10/23/2025

Oct 23, 2025
H:\2023\FLA230191.00\ENGINEERING\CAD\DRAWINGS\PLAN SETS\CIVIL SITE PLAN\REV. 0\AP-CIVL-UTIL-FLA230191.00-0A----->LAYOUT: C-501 UTIL
KD

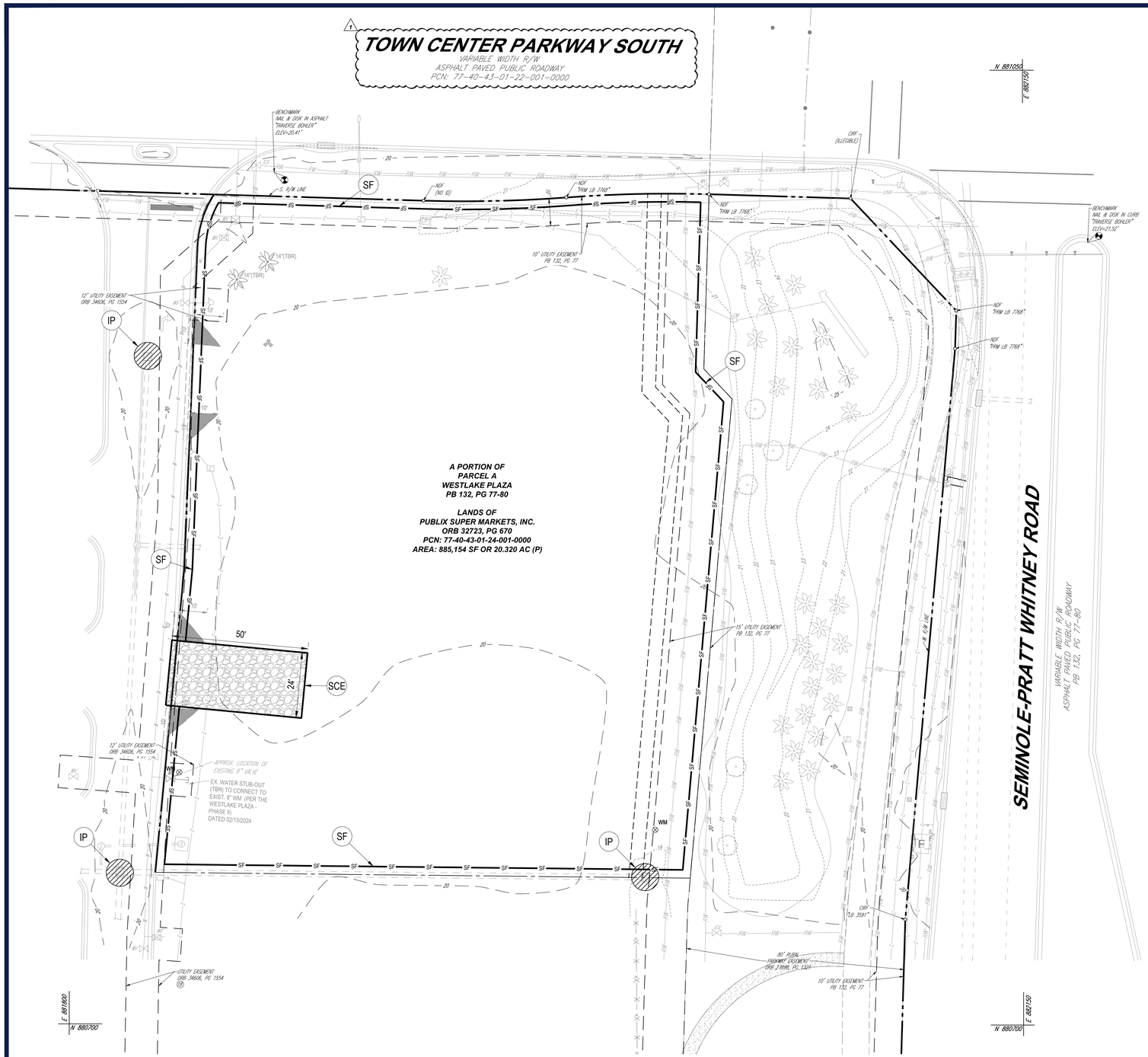

LEGEND

SOIL EROSION AND SEDIMENT CONTROL PLAN PHASE I

ONSITE PROPERTY LINE / R.O.W. LINE	
LEASE PROPERTY LINE	
NEIGHBORING PROPERTY LINE	
EX. EASEMENT	
EX. ROADWAY C/L	
EX. OVERHEAD ELECTRIC	OH
EX. STORM SEWER	
EX. SANITARY LINE	S
EX. FENCE	X
EX. SPOT ELEVATION	E: 51x1 GR: 51x1
EX. TREE	14" PINE
EX. CONCRETE	
TO BE REMOVED/ TO BE RELOCATED	(TBR)(TBRL)
SOIL TRACKING PREVENTION MAT	
PROP. SILT FENCE	SF
PROP. INLET PROTECTION	
EX. TREE TO BE REMOVED	14" PINE

KEYNOTES:

- IP — INLET PROTECTION
- SF — SILT FENCE
- SCE — CONSTRUCTION ENTRANCE

DEMOLITION NOTES

1. BOHLER ENGINEERING FL, LLC IS NOT RESPONSIBLE FOR JOB SITE SAFETY OR SUPERVISION. CONTRACTOR IS TO PROCEED WITH THE DEMOLITION IN A SYSTEMATIC AND SAFE MANNER, FOLLOWING ALL THE OSHA REQUIREMENTS, TO ENSURE PUBLIC AND CONTRACTOR SAFETY.
2. ALL DEMOLITION ACTIVITIES ARE TO BE PERFORMED IN ACCORDANCE WITH THESE PLANS AND SPECIFICATIONS AS WELL AS ALL FEDERAL, STATE, AND LOCAL REGULATIONS. ANY DISCREPANCIES OR DEVIATIONS SHALL BE IDENTIFIED BY THE CONTRACTOR TO BOHLER ENGINEERING FL, LLC IN WRITING FOR RESOLUTION PRIOR TO INITIATION OF SITE ACTIVITY.
3. PRIOR TO STARTING ANY DEMOLITION CONTRACTOR IS RESPONSIBLE FOR/TO:
   A. THE CONTRACTOR SHALL OBTAIN A SUNSHINE STATE ONE CALL LOCATION CERTIFICATION PRIOR TO ANY EXCAVATION OR DEMOLITION. THE NUMBER IS 1-800-432-4770.
   B. ENSURING COPIES OF ALL PERMITS AND APPROVALS MUST BE MAINTAINED ON SITE AND AVAILABLE FOR REVIEW.
   C. INSTALLING THE REQUIRED SOIL EROSION AND SEDIMENT CONTROL MEASURES PRIOR TO SITE DISTURBANCE.
   D. LOCATE/CAP ALL UTILITIES AND SERVICES, INCLUDING BUT NOT LIMITED TO GAS, WATER, ELECTRIC, SANITARY AND STORM SEWER, TELEPHONE, CABLE, FIBER OPTIC CABLE, ETC. WITHIN THE LIMITS OF DISTURBANCE.
   E. PROTECTING AND MAINTAINING IN OPERATION, ALL ACTIVE SYSTEMS THAT ARE NOT BEING REMOVED DURING ALL DEMOLITION ACTIVITIES.
   F. FAMILIARIZING THEMSELVES WITH THE APPLICABLE UTILITY SERVICE PROVIDER AND BEING RESPONSIBLE FOR ALL COORDINATION REGARDING UTILITY DEMOLITION REQUIRED FOR THE PROJECT. THE CONTRACTOR SHALL PROVIDE THE OWNER WRITTEN NOTIFICATION THAT THE EXISTING UTILITIES AND SERVICES HAVE BEEN TERMINATED AND ABANDONED IN ACCORDANCE WITH JURISDICTION AND UTILITY COMPANY REQUIREMENTS.
   G. COORDINATION WITH UTILITY COMPANIES REGARDING WORKING "OFF-PEAK" HOURS OR ON WEEKENDS AS MAY BE REQUIRED TO MINIMIZE THE IMPACT ON THE AFFECTED PARTIES.
   H. A COMPLETE INSPECTION OF CONTAMINANTS BY A LICENSED ENVIRONMENTAL TESTING AGENCY, OF ALL BUILDINGS AND/OR STRUCTURES TO BE REMOVED. SAME SHALL BE PERFORMED IN ACCORDANCE WITH ALL APPLICABLE LOCAL, STATE, AND FEDERAL ENVIRONMENTAL REGULATIONS. ANY/ALL CONTAMINANTS SHALL BE REMOVED AND DISPOSED OF BY A FEDERALLY LICENSED CONTRACTOR IN ACCORDANCE WITH FEDERAL, STATE, AND LOCAL REGULATIONS. ALL ENVIRONMENTAL WORK INCLUDING HAZARDOUS MATERIAL, SOILS, ASBESTOS, OR OTHER REFERENCED OR IMPLIED HEREIN IS THE SOLE RESPONSIBILITY OF THE OWNER'S ENVIRONMENTAL CONSULTANT.
4. THE CONTRACTOR SHALL PROVIDE ALL THE "MEANS AND METHODS" NECESSARY TO PREVENT MOVEMENT, SETTLEMENT, OR COLLAPSE OF EXISTING STRUCTURES, AND ANY OTHER IMPROVEMENTS THAT ARE REMAINING ON OR OFF SITE. THE DEMOLITION CONTRACTOR IS RESPONSIBLE FOR ALL REPAIRS OF DAMAGE TO ALL ITEMS THAT ARE TO REMAIN AS A RESULT OF HIS ACTIVITIES. ALL REPAIRS SHALL USE NEW MATERIAL. THE REPAIRS SHALL RESTORE THE ITEM TO THE PRE-DEMOLITION CONDITION.
5. IN THE ABSENCE OF SPECIFICATIONS, THE CONTRACTOR SHALL PERFORM EARTH MOVEMENT ACTIVITIES, DEMOLITION AND REMOVAL OF ALL FOUNDATION WALLS, FOOTINGS, AND OTHER MATERIALS WITHIN THE LIMITS OF DISTURBANCE IN ACCORDANCE WITH DIRECTION BY OWNER'S STRUCTURAL OR GEOTECHNICAL ENGINEER.
6. EXPLOSIVES SHALL NOT BE USED WITHOUT PRIOR WRITTEN CONSENT OF BOTH THE OWNER AND APPLICABLE GOVERNMENTAL AUTHORITIES. ALL THE REQUIRED PERMITS AND EXPLOSIVE CONTROL MEASURES THAT ARE REQUIRED BY THE FEDERAL, STATE, AND LOCAL REGULATIONS SHALL BE IN PLACE PRIOR TO STARTING AN EXPLOSIVE PROGRAM. THE CONTRACTOR IS ALSO RESPONSIBLE FOR ALL INSPECTION AND SEISMIC VIBRATION TESTING THAT IS REQUIRED TO MONITOR THE EFFECTS ON ALL LOCAL STRUCTURES.
7. CONTRACTOR SHALL PROVIDE TRAFFIC CONTROL AND GENERALLY ACCEPTED SAFE PRACTICES IN CONFORMANCE WITH THE "MANUAL ON UNIFORM TRAFFIC CONTROL," AS WELL AS FEDERAL, STATE, AND LOCAL REGULATIONS WHEN DEMOLITION RELATED ACTIVITIES IMPACT ROADWAYS OR ROADWAY RIGHT - OF - WAY.
8. CONDUCT DEMOLITION ACTIVITIES IN SUCH A MANNER TO ENSURE MINIMUM INTERFERENCE WITH ROADS, STREETS, SIDEWALKS, WALKWAYS, AND OTHER ADJACENT FACILITIES. STREET CLOSURE PERMITS MUST BE RECEIVED FROM THE APPROPRIATE GOVERNMENTAL AUTHORITY.
9. DEMOLITION ACTIVITIES AND EQUIPMENT SHALL NOT USE AREAS OUTSIDE THE DEFINED PROPERTY LINE WITHOUT WRITTEN PERMISSION OF THE OWNER, AND/OR APPROPRIATE GOVERNMENT AGENCY.
10. USE DUST CONTROL MEASURES TO LIMIT AIRBORNE DUST AND DIRT RISING AND SCATTERING IN THE AIR IN ACCORDANCE WITH FEDERAL, STATE, AND LOCAL REGULATIONS. AFTER THE DEMOLITION IS COMPLETE, ADJACENT STRUCTURES AND IMPROVEMENTS SHALL BE CLEANED OF ALL DUST AND DEBRIS CAUSED BY THE DEMOLITION OPERATIONS. THE CONTRACTOR IS RESPONSIBLE FOR RETURNING ALL ADJACENT AREAS TO THEIR "PRE-DEMOLITION" CONDITION.
11. CONTRACTOR IS RESPONSIBLE TO SAFEGUARD SITE AS NECESSARY TO PERFORM THE DEMOLITION IN SUCH A MANNER AS TO PREVENT THE ENTRY OF UNAUTHORIZED PERSONS AT ANY TIME.
12. THIS DEMOLITION PLAN IS INTENDED TO IDENTIFY THOSE EXISTING ITEMS/CONDITIONS WHICH ARE TO BE REMOVED. IT IS NOT INTENDED TO PROVIDE DIRECTION OTHER THAN THAT ALL METHODS AND MEANS ARE TO BE IN ACCORDANCE WITH FEDERAL, STATE, AND LOCAL REGULATIONS. THE CONTRACTOR SHALL BE RESPONSIBLE FOR ALL OSHA AND OTHER SAFETY PRECAUTIONS NECESSARY TO PROVIDE A SAFE WORK SITE.
13. DEBRIS SHALL NOT BE BURIED ON THE SUBJECT SITE. ALL DEMOLITION WASTES AND DEBRIS (SOLID WASTE) SHALL BE DISPOSED OF IN ACCORDANCE WITH ALL FEDERAL, STATE, AND LOCAL REGULATIONS AND APPLICABLE CODES.
14. CONTRACTOR IS RESPONSIBLE FOR FIELD VERIFYING ALL EXISTING SITE IMPROVEMENTS AND UTILITIES. ALL DISCREPANCIES SHALL BE IDENTIFIED TO THE ENGINEER IN WRITING.
15. ALL EXISTING UTILITIES BEING REMOVED SHALL BE DONE SO BY THE CONTRACTOR IN ACCORDANCE WITH STATE AND LOCAL REGULATIONS.
16. THERE ARE NO KNOWN WATER COURSES, WATER BODIES, FLOODPLAINS, XERIC UPLANDS, WETLANDS, CUTTHROAT GRASS SEEPS, HISTORICAL, AND ARCHAEOLOGICAL RESOURCES, OR CONES OF INFLUENCE FOR POTABLE WELLS, AQUIFER RECHARGE AREAS, SOIL TYPES, AND VEGETATIVE COVER LOCATED WITHIN PROJECT LIMITS.

DATUM NOTE

ELEVATIONS ARE BASED ON NAVD88 DATUM DETERMINED BY GPS OBSERVATIONS AND TIED IN TO THE NGS NO. DI8238 WITH A PUBLISHED ELEVATION OF 21.01 FEET.

FEMA NOTE

THE PROPERTY IS LOCATED IN OTHER AREAS ZONE X (AREAS DETERMINED TO BE OUTSIDE THE 0.2% ANNUAL CHANCE FLOODPLAIN) AND SPECIAL FLOOD HAZARD AREAS SUBJECT TO INUNDATION BY THE 1% ANNUAL CHANCE FLOOD ZONE AE (BASE FLOOD ELEVATIONS DETERMINED) PER MAP ENTITLED "FIRM FLOOD INSURANCE RATE MAP, PALM BEACH COUNTY, FLORIDA AND INCORPORATED AREAS, PANEL 345 OF 1200", MAP NUMBER 12099C0345F, WITH A MAP EFFECTIVE DATE OF OCTOBER 5, 2017.

THIS PLAN TO BE UTILIZED FOR SOIL EROSION AND SEDIMENT CONTROL PURPOSES ONLY

20 10 5 0 20
SCALE: 1" = 20'

BOHLER™

SITE CIVIL AND CONSULTING ENGINEERING
LAND SURVEYING
PROGRAM MANAGEMENT
LANDSCAPE ARCHITECTURE
SUSTAINABLE DESIGN
PERMITTING SERVICES
TRANSPORTATION SERVICES

THE INFORMATION, DESIGN AND CONTENT OF THIS PLAN ARE PROPRIETARY AND SHALL NOT BE COPIED OR USED FOR ANY PURPOSE WITHOUT PRIOR WRITTEN AUTHORIZATION FROM BOHLER. ONLY APPROVED, SIGNED AND SEALED PLANS SHALL BE UTILIZED FOR CONSTRUCTION PURPOSES.
© 2024 BOHLER

REVISIONS

REV	DATE	COMMENT	DRAWN BY / CHECKED BY
1	7/14/2025	1ST ROUND OF COMMENTS	AH / KD
2	8/11/2025	2ND ROUND OF COMMENTS	AH / KD
3	08/14/2025	QAQC COMMENTS	AH / KD
4	10/23/2025	3RD ROUND OF COMMENTS	KD / KD

811 KNOW WHAT'S BELOW ALWAYS CALL 811 BEFORE YOU DIG
It's fast. It's free. It's the law.
www.callsunshine.com

ISSUED FOR MUNICIPAL & AGENCY REVIEW & APPROVAL

THIS DRAWING IS INTENDED FOR MUNICIPAL AND/OR AGENCY REVIEW AND APPROVAL. IT IS NOT INTENDED AS A CONSTRUCTION DOCUMENT UNLESS INDICATED OTHERWISE.

PROJECT No.: FLA230191.00-0A
DRAWN BY: ~AH/MV~
CHECKED BY: ~KD/KM ~
DATE: 10/23/2025
CAD I.D.: P-CIVL-EROS

PROJECT:

SITE CONSTRUCTION PLANS

FOR

MAVIS TIRES & BRAKES - CITY OF WESTLAKE
16775 PERSIMMON BLVD
WESTLAKE, FL 33470
CITY OF WESTLAKE
S 01, T 43S, R 40E

BOHLER™
600 N. WESTSHORE BLVD. SUITE 950
TAMPA, FLORIDA 33609
Phone: (813) 812-4100
Fax: (813) 812-4101
FLORIDA BUSINESS CERT. OF AUTH. No. 30780

This item has been digitally signed and sealed by Kayla M. Dedrick PE on the date adjacent to the seal. Signature must be verified on any electronic copies.

SHEET TITLE:

EROSION AND SEDIMENT CONTROL PLAN PHASE 1

SHEET NUMBER:

C-801

REVISION 4 - 10/23/2025

Oct 23, 2025
H:\2023\FLA230191.00\ENGINEERING\CAD\DRAWINGS\PLAN SETS\CIVIL SITE PLAN\REV. 0\AP-CIVL-EROS-FLA230191.00-0A-----\LAYOUT: C-801 EROS
KD

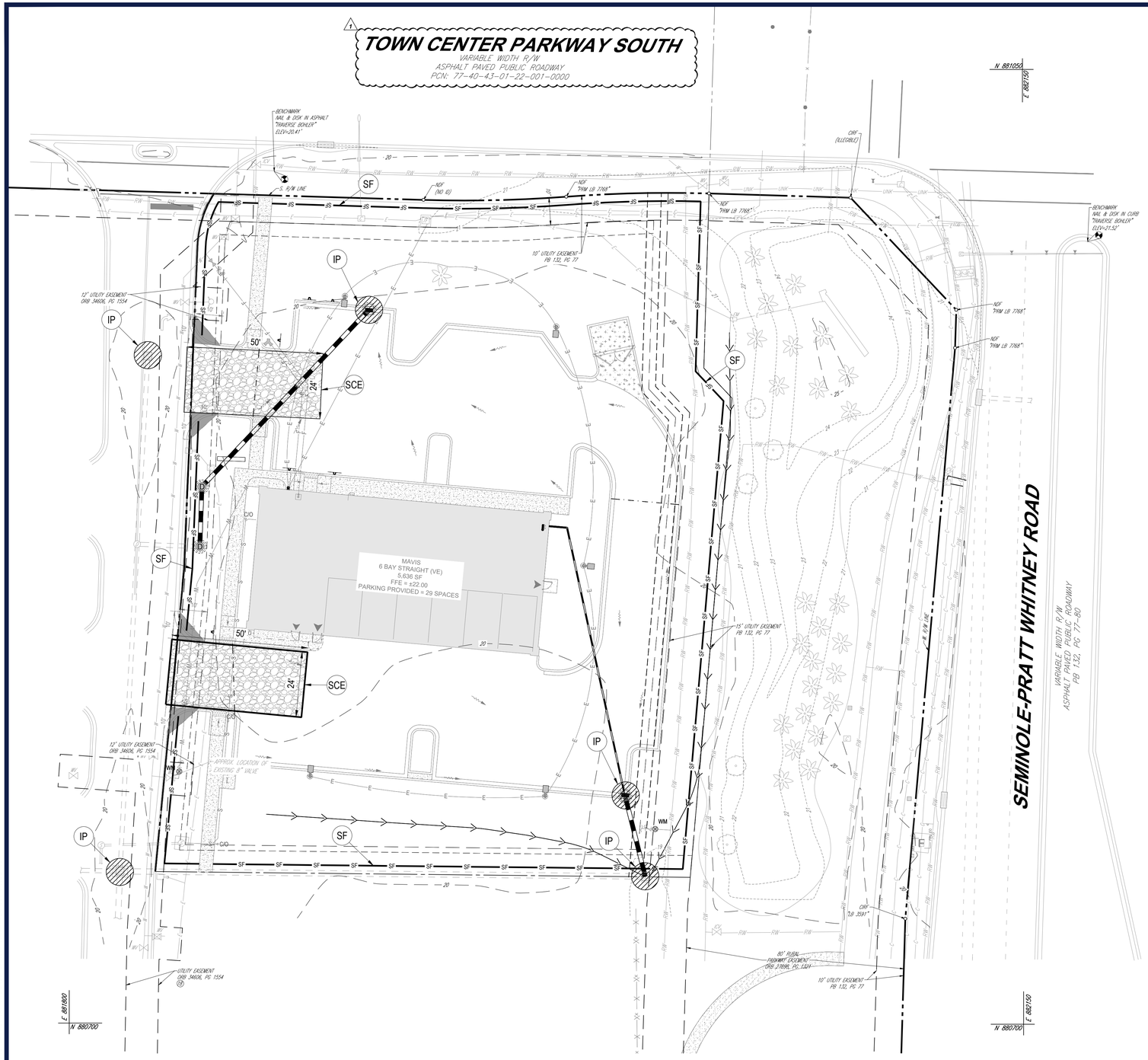

KEYNOTES:

- (IP) INLET PROTECTION
- (SF) SILT FENCE
- (SCE) CONSTRUCTION ENTRANCE

LEGEND

SOIL EROSION AND SEDIMENT CONTROL PLAN PHASE II

- ONSITE PROPERTY LINE / R.O.W. LINE
- LEASE PROPERTY LINE
- NEIGHBORING PROPERTY LINE
- EX. OVERHEAD ELECTRIC
- EX. SPOT ELEVATION — 16.59 X OR 59.X
- PROP STORM SEWER
- RIDGE LINE
- PROP. SILT FENCE — SF
- PROP. INLET PROTECTION
- SOIL TRACKING PREVENTION MAT

POLLUTION PREVENTION NOTES

1. EROSION AND SEDIMENT CONTROL BMP'S IN ADDITION TO THOSE PRESENTED ON THESE PLANS SHALL BE IMPLEMENTED AS NECESSARY TO PREVENT TURBID DISCHARGES FROM FLOWING ONTO ADJACENT PROPERTIES OR ROADWAYS, OFF SITE STORMWATER CONVEYANCES OR RECEIVING WATERS, OR ON SITE WETLANDS AND SURFACE WATERS. BMP'S SHALL BE DESIGNED, INSTALLED, AND MAINTAINED BY THE SITE OPERATOR TO ENSURE THAT OFF SITE SURFACE WATER QUALITY REMAINS CONSISTENT WITH FEDERAL, STATE, AND LOCAL REGULATIONS. [THE OPERATOR IS THE ENTITY THAT OWNS OR OPERATES THE CONSTRUCTION ACTIVITY AND HAS AUTHORITY TO CONTROL THOSE ACTIVITIES AT THE PROJECT NECESSARY TO ENSURE COMPLIANCE.]
2. OFF SITE SURFACE WATER DISCHARGES, DISCHARGES TO ONSITE WETLANDS, OR SURFACE WATERS WITH TURBIDITY IN EXCESS OF 29 NEPHELOMETRIC TURBIDITY UNITS (NTU'S) ABOVE BACKGROUND LEVEL SHALL BE IMMEDIATELY CORRECTED. SUCH INCIDENTS SHALL BE REPORTED TO WATER RESOURCES WITHIN 24 HOURS OF THE OCCURRENCE. THE REPORT SHALL INCLUDE THE CAUSE OF THE DISCHARGE AND CORRECTIVE ACTIONS TAKEN.
3. THE OPERATOR SHALL ENSURE THAT ADJACENT PROPERTIES ARE NOT IMPACTED BY WIND EROSION, OR EMISSIONS OF UNCONFINED PARTICULATE MATTER IN ACCORDANCE WITH RULE 62-296.320(4)(C)1, F.A.C., BY TAKING APPROPRIATE MEASURES TO STABILIZE AFFECTED AREAS.
4. FUEL AND OTHER PETROLEUM PRODUCT SPILLS THAT ENTER STORMWATER DRAINS OR WATERBODIES, OR FUEL AND OTHER PETROLEUM PRODUCT SPILLS THAT ARE IN EXCESS OF 25 GALLONS SHALL BE CONTAINED, CLEANED UP, AND IMMEDIATELY REPORTED TO WATER RESOURCES. SMALLER GROUND SURFACE SPILLS SHALL BE CLEANED UP AS SOON AS PRACTICAL.
5. IF CONTAMINATED SOIL AND/OR GROUNDWATER IS DISCOVERED DURING DEVELOPMENT OF THE SITE, ALL ACTIVITY IN THE VICINITY OF THE CONTAMINATION SHALL IMMEDIATELY CEASE AND WATER RESOURCES SHALL BE CONTACTED.
6. PRIOR TO DEMOLITION OF EXISTING ON SITE STRUCTURES AN ASBESTOS SURVEY AND/OR ASBESTOS NOTIFICATION MAY BE REQUIRED.
7. NATIONAL POLLUTANT DISCHARGE ELIMINATION SYSTEM:
   - A. NPDES CONSTRUCTION GENERIC PERMIT COVERAGE SHALL BE OBTAINED AT LEAST 48 HOURS IN ADVANCE OF CONSTRUCTION COMMENCEMENT IN ACCORDANCE WITH RULE 62-621.300(4)(a), F.A.C.
   - B. A COPY OF THE CERTIFIED NPDES NOI, OR A COPY OF THE FDEP COVERAGE CONFIRMATION LETTER SHALL BE POSTED AT THE SITE IN ACCORDANCE WITH RULE 62-621.300(4)(A) PART III.C.2, F.A.C.
   - C. A COPY OF THE CERTIFIED NPDES NOI, OR A COPY OF THE FDEP COVERAGE CONFIRMATION LETTER SHALL BE PROVIDED TO WATER RESOURCES IN ACCORDANCE WITH RULE 62-621.300(4)(a)PART III.D.1, F.A.C.
   - D. THE SWPPP SHALL BE CERTIFIED IN ACCORDANCE WITH RULE 62-621.300(4)(a)PART V.D.6, F.A.C.
   - E. A COPY OF THE SWPPP, AND COPIES OF THE INSPECTION AND MAINTENANCE RECORDS SHALL BE MAINTAINED AT THE PROJECT SITE; AND SHALL BE READILY AVAILABLE TO COUNTY OR STATE INSPECTORS.
8. THE DISCHARGE OF GROUNDWATER PRODUCED THROUGH DEWATERING, TO SURFACE WATERS, OR ANY PORTION OF THE MS4 WILL REQUIRE SEPARATE PERMITTING FROM THE FLORIDA DEPARTMENT OF ENVIRONMENTAL PROTECTION (DEP). PERMIT(S) SHALL BE OBTAINED PRIOR TO THE COMMENCEMENT OF DEWATERING.

MAINTENANCE NOTES

N.P.D.E.S. PERMIT COMPLIANCE REQUIRES INSPECTIONS EVERY 7 CALENDAR DAYS BY A NPDES QUALIFIED INSPECTOR AND PERIODIC INSPECTIONS WITHIN 24 HOURS OF ANY RAINFALL EVENT OF 0.5" OR GREATER. THESE INSPECTIONS MAY RESULT IN RECOMMENDATIONS FOR ROUTINE MAINTENANCE OF THE SOIL EROSION CONTROL DEVICES, AS WELL AS FURTHER MAINTENANCE AS OUTLINED BELOW. IT SHALL BE THE CONTRACTORS RESPONSIBILITY TO ENSURE N.P.D.E.S. COMPLIANCE.

1. INSPECTIONS BY CONTRACTOR MUST OCCUR AT LEAST ONCE A WEEK OR WITHIN 24 HOURS OF A STORM EVENT 0.5" OR GREATER.
2. THROUGHOUT THE CONSTRUCTION PERIOD, ALL MUD/SILT TRACKED ONTO EXISTING ROADS FROM THE SITE DUE TO CONSTRUCTION SHALL BE IMMEDIATELY REMOVED BY THE CONTRACTOR.
3. CATCH BASIN INLET AND CONCRETE FLUME FILTERS SHALL BE MAINTAINED CLEAN AT ALL TIMES THROUGHOUT THE CONSTRUCTION PERIOD. WEEKLY INSPECTIONS WILL BE PERFORMED EVERY 7 CALENDAR DAYS. IF A FILTER HAS HOLES OR IS INUNDATED WITH SEDIMENT, THE FILTER WILL REQUIRE REPLACEMENT BY CONTRACTOR.
4. CONSTRUCTION ACCESS AND TRACKING MAT MUST BE MAINTAINED BY CONTRACTOR. REPLENISH CRUSHED AGGREGATE IF PRESENT LAYER IS FILLED WITH SEDIMENT, POOLING WATER, OR HAS RUTS. A NEW LAYER MAY BE ADDED IF OLD LAYERS BECOME COMPACTED.
5. SILT FENCE IS TO BE INSPECTED DAILY BY CONTRACTOR AND EVERY 7 CALENDAR DAYS BY N.P.D.E.S. QUALIFIED INSPECTOR. IF REPAIRS OR REPLACEMENT IS NECESSARY, IT SHALL BE PERFORMED IMMEDIATELY. THE SILT FENCE SHOULD BE TRENCHED IN, BACK-FILLED, AND STAPLED OR STAKED ACCORDING TO THE MANUFACTURER'S SPECIFICATIONS. MAINTENANCE INCLUDES THE REMOVING OF BUILT-UP SEDIMENT. WHEN THE SEDIMENT ACCUMULATES TO 1/3 OF THE HEIGHT OF THE FENCE, CONTRACTOR MAY HAVE TO REMOVE, REPLACE, RETRENCH, OR RE-BACKFILL THE FENCE IF IT FAILS. IT WOULD ALSO BE NECESSARY TO REINSTALL IF ANY PORTION OF THE FENCING WAS DAMAGED BY CONSTRUCTION MACHINERY.
6. SEEDING OR RESEEDING MAY BE REQUIRED IMMEDIATELY TO AREAS WHICH HAVE BEEN DAMAGED BY RUNOFF.
7. THE CONTRACTOR SHALL CONTINUOUSLY ENSURE THAT THE PERIMETER OF THE SITE, INCLUDING CONSTRUCTION ENTRANCES, IS SECURED FROM ALLOWING DEBRIS TO LEAVE THE SITE DUE TO CONSTRUCTION ACTIVITY OR RAINFALL EVENTS. A WEEKLY LOG SHALL BE UPDATED AND KEPT ON-SITE IN ACCORDANCE WITH THE N.P.D.E.S. PERMIT. BY BIDDING DOCUMENTS CONTRACTOR ACKNOWLEDGES HE/SHE IS AWARE OF N.P.D.E.S. GUIDELINES AND POLICIES AS WELL AS BEST MANAGEMENT PRACTICES AND ASSUMES SOLE RESPONSIBILITY FOR FINES IMPOSED BY GOVERNMENTAL AGENCIES DUE TO VIOLATIONS.

SEQUENCE OF CONSTRUCTION

UPON IMPLEMENTATION AND INSTALLATION OF THE FOLLOWING AREAS: TRAILER,PARKING, LAYDOWN, PORTABLE RESTROOMS, WHEELED WASTE DISPOSAL DUMPSTER(S), WHEEL WASH, CONCRETE WASHOUT, FUEL AND MATERIAL STORAGE CONTAINERS, SOLID WASTE CONTAINERS, ETC. IMMEDIATELY DENOTE THEM ON THE SITE MAPS AND NOTE ANY CHANGES IN THEIR LOCATIONS ON THE SITE MAP.

PHASE 1

1. CONSTRUCT STABILIZED CONSTRUCTION ENTRANCE AND INSTALL SILT FENCE.
2. INSTALL INLET PROTECTION AT EXISTING INLET(S).
3. PREPARE CLEARING AND GRUBBING OF THE SITE, IF APPLICABLE.
4. INSTALL STORMWATER CONVEYANCE STRUCTURES AND CULVERTS, ENSURE THAT NEW INLETS ARE PROTECTED PRIOR TO MAKING THE OUTFALL CONNECTION.

PHASE 2

1. PERFORM MASS GRADING, ROUGH GRADE TO ESTABLISH PROPOSED DRAINAGE PATTERNS.
2. START CONSTRUCTION OF THE PROPOSED BUILDING PAD AND STRUCTURES.
3. TEMPORARILY SEED WITH PURE LIVE SEED THROUGHOUT THE CONSTRUCTION DISTURBED AREAS THAT WILL BE INACTIVE FOR 7 DAYS OR MORE AS REQUIRED BY THE GENERIC PERMIT.

THIS PLAN TO BE UTILIZED FOR SOIL EROSION AND SEDIMENT CONTROL PURPOSES ONLY

20 10 5 0 20
SCALE: 1" = 20'

BOHLER™
SITE CIVIL AND CONSULTING ENGINEERING
LAND SURVEYING
PROGRAM MANAGEMENT
LANDSCAPE ARCHITECTURE
SUSTAINABLE DESIGN
PERMITTING SERVICES
TRANSPORTATION SERVICES

THE INFORMATION, DESIGN AND CONTENT OF THIS PLAN ARE PROPRIETARY AND SHALL NOT BE COPIED OR USED FOR ANY PURPOSE WITHOUT PRIOR WRITTEN AUTHORIZATION FROM BOHLER. ONLY APPROVED, SIGNED AND SEALED PLANS SHALL BE UTILIZED FOR CONSTRUCTION PURPOSES.
© 2024 BOHLER, INC.

REVISIONS

REV	DATE	COMMENT	DRAWN BY / CHECKED BY
1	7/14/2025	1ST ROUND OF COMMENTS	AH / KD
2	8/11/2025	2ND ROUND OF COMMENTS	AH / KD
3	08/14/2025	QAQC COMMENTS	AH / KD
4	10/23/2025	3RD ROUND OF COMMENTS	KD / KD

KNOW WHAT'S BELOW ALWAYS CALL 811 BEFORE YOU DIG
It's fast. It's free. It's the law.
www.callsunshine.com

ISSUED FOR MUNICIPAL & AGENCY REVIEW & APPROVAL

THIS DRAWING IS INTENDED FOR MUNICIPAL AND/OR AGENCY REVIEW AND APPROVAL. IT IS NOT INTENDED AS A CONSTRUCTION DOCUMENT UNLESS INDICATED OTHERWISE.

PROJECT No.: FLA230191.00-0A
DRAWN BY: ~AH/MV~
CHECKED BY: ~KD/KM ~
DATE: 10/23/2025
CAD I.D.: P-CIVL-EROS

PROJECT:

SITE CONSTRUCTION PLANS

FOR

MAVIS TIRES & BRAKES — DISCOUNT PRICES

MAVIS TIRES & BRAKES - CITY OF WESTLAKE

16775 PERSIMMON BLVD
WESTLAKE, FL 33470
CITY OF WESTLAKE
S 01, T 43S, R 40E

BOHLER™
600 N. WESTSHORE BLVD. SUITE 950
TAMPA, FLORIDA 33609
Phone: (813) 812-4100
Fax: (813) 812-4101
FLORIDA BUSINESS CERT. OF AUTH. No. 30780

This item has been digitally signed and sealed by Kayla M. Dedrick PE on the date adjacent to the seal. Signature must be verified on any electronic copies.

SHEET TITLE:

EROSION AND SEDIMENT CONTROL PLAN PHASE 2

SHEET NUMBER:

C-802

REVISION 4 - 10/23/2025

Oct 23, 2025
H:\2023\FLA230191.00\ENGINEERING\CAD\DRAWINGS\PLAN SETS\CIVIL SITE PLAN\REV. 3\AP-CIVL-EROS-FLA230191.00-0A.----\LAYOUT: C-802 EROS
KO

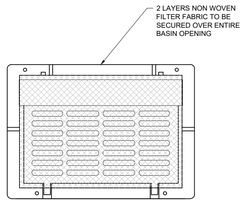

INLET PROTECTION

NOT TO SCALE (FL-O050102 - 09/2024)

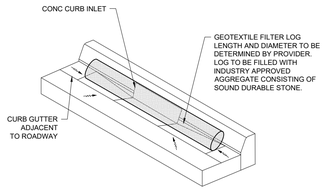

CURB INLET FILTER LOG

NOT TO SCALE (FL-O050101 - 09/2024)

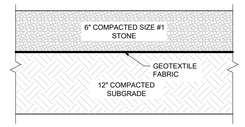

SOIL TRACKING PAD

NOT TO SCALE (FL-O020101 - 09/2024)

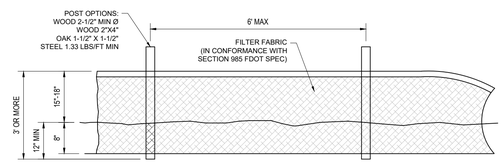

SILT FENCE

NOT TO SCALE (FL-O040101 - 09/2024)

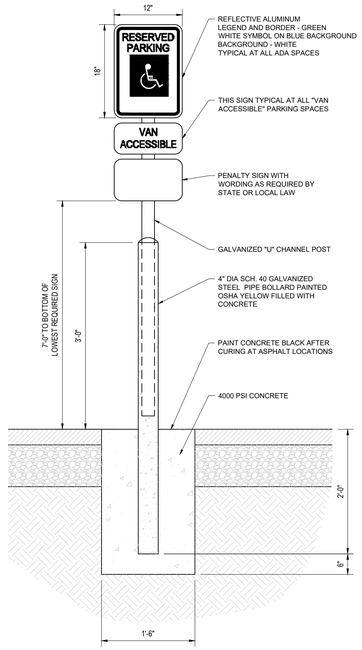

NOTES:
ONE AT EACH ADA SPACE. WHERE ADA SPACES FACE EACH OTHER WITHOUT WALKWAY, THERE SHALL BE ONE POST WITH SIGNS MOUNTED BOTH SIDES

BOLLARD MOUNTED ADA PARKING SIGN

NOT TO SCALE (FL-S060101 - 09/2024)

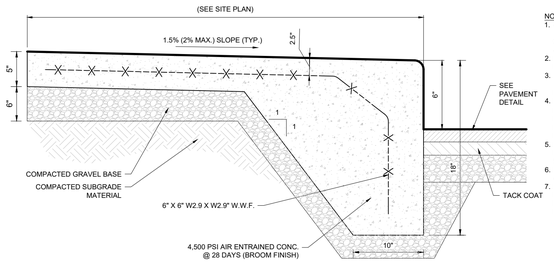

NOTES:
1. ANY EXCAVATION BELOW DESIRED GRADE DUE TO OVER EXCAVATION OR WET SOIL CONDITIONS SHALL BE BACKFILLED WITH ADDITIONAL GRAVEL BASE.
2. DUMMY JOINTS (FORMED) SHALL BE INSTALLED MIDWAY BETWEEN EXPANSION JOINTS.
3. THE 6" CURB REVEAL IS TYPICAL. CONTRACTOR TO REVIEW GRADING PLAN FOR AREAS WHERE REVEAL IS TO BE MODIFIED.
4. PROVIDE CONTROL JOINTS 5'-0" O.C. MIN. & EXPANSION JOINTS SHALL BE RECESSED ¼" FROM THE FRONT FACE AND TOP OF THE CURB. REFER TO SIDEWALK CONSTRUCTION JOINT DETAILS.
5. PREFORMED EXPANSION JOINT FILLER SHALL BE PLACED ADJACENT TO AND AROUND EXISTING STRUCTURES.
6. MIN CROSS SLOPE 1/4" PER FOOT PITCHED AWAY FROM BUILDING.
7. PROVIDE 1/2" PREMOLDED BITUMINOUS EXPANSION JOINT AT INTERFACE WITH BUILDING. REFER TO ARCH PLANS AT DOOR LOCATIONS.

MONOLITHIC CURB AND SIDEWALK

NOT TO SCALE (BE-S030201 - 06/2024)

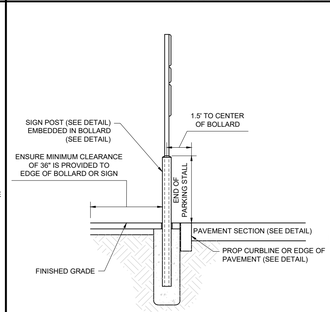

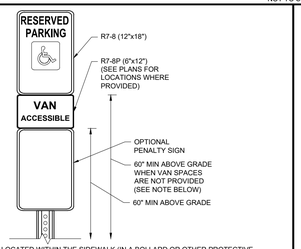

NOTES:
1. LOCATION - THE SIGN(S) MAY BE LOCATED WITHIN THE SIDEWALK (IN A BOLLARD OR OTHER PROTECTIVE STRUCTURE), MOUNTED ON A SIGN POST BEHIND THE SIDEWALK OR OTHER LOCATION BEYOND THE POTENTIAL FOR VEHICLE INTERACTION, OR MOUNTED ON A BUILDING OR OTHER STRUCTURE. REFER TO PLANS FOR LOCATIONS.
2. SIGN MOUNTING HEIGHT - A MINIMUM 60", AS MEASURED FROM FINISHED GRADE TO THE BOTTOM OF THE SIGN, SHALL BE PROVIDED. IN SITUATIONS WHERE VAN SPACES ARE PROVIDED, THE MEASUREMENT SHALL BE TO THE BOTTOM OF THE 'VAN ACCESSIBLE' (R7-8P) SIGN. WHEN NO VAN SPACES ARE PROVIDED, THE MEASUREMENT SHALL BE TO THE BOTTOM OF THE 'RESERVED PARKING' (R7-8) SIGN. FOR UNIFORMITY, WHEN THERE IS A COMBINATION OF VAN SPACES AND NON-VAN SPACES IN ON PARKING ROW, THE TOPS OF THE 'RESERVED PARKING' (R7-8) SIGNS SHALL BE CONSISTENT.
3. SIGN SPECIFICATIONS - UNLESS OTHERWISE REQUIRED BY STATE OR LOCAL REQUIREMENTS, THE R7-8 AND R7-8P SIGNS SHALL BE PER MUTCD SPECIFICATIONS. THE PENALTY SIGN SHALL BE PER STATE OR LOCAL REQUIREMENTS AND SHALL BE 12"x18".

RESERVED PARKING SIGN

NOT TO SCALE (BE-S060101 - 11/2024)

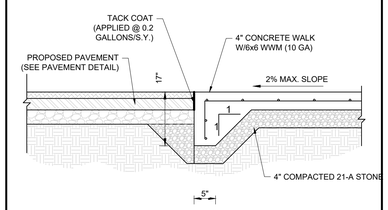

NOTE:
1. CONCRETE TO BE 4000 P.S.I. @ 28 DAYS.

MONOLITHIC CURB AND FLUSH SIDEWALK

NOT TO SCALE (NS-S020208 - 02/2024)

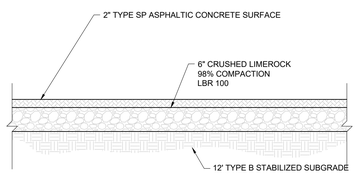

NOTE:
1. SECTION SHOWN IS BASED ON GEOTECHNICAL REPORT PREPARED BY ECS, ENTITLED SUBSURFACE EXPLORATION AND GEOTECHNICAL ENGINEERING REPORT, MAVIS - LOXAHATCHEE, FL, DATED 02/27/2025 (PROJECT #25:4345). FINAL DESIGN TO BE PROVIDED ONCE FINAL CBR'S ARE AVAILABLE ON COMPACTED SUB-BASE.

STANDARD DUTY ASPHALT PAVEMENT

NOT TO SCALE (MS-S010101 - 06/2023)

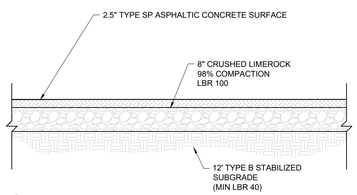

NOTE:
1. SECTION SHOWN IS BASED ON GEOTECHNICAL REPORT PREPARED BY ECS, ENTITLED SUBSURFACE EXPLORATION AND GEOTECHNICAL ENGINEERING REPORT, MAVIS - LOXAHATCHEE, FL, DATED 02/27/2025 (PROJECT #25:4345). FINAL DESIGN TO BE PROVIDED ONCE FINAL CBR'S ARE AVAILABLE ON COMPACTED SUB-BASE.

HEAVY DUTY ASPHALT PAVEMENT

NOT TO SCALE (MS-S010102 - 06/2023)

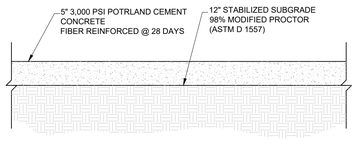

NOTE:
1. SECTION SHOWN IS BASED ON GEOTECHNICAL REPORT PREPARED BY ECS, ENTITLED SUBSURFACE EXPLORATION AND GEOTECHNICAL ENGINEERING REPORT, MAVIS - LOXAHATCHEE, FL, DATED 02/27/2025 (PROJECT #25:4345). FINAL DESIGN TO BE PROVIDED ONCE FINAL CBR'S ARE AVAILABLE ON COMPACTED SUB-BASE.

STANDARD DUTY CONCRETE PAVEMENT

NOT TO SCALE (MS-S010201 - 06/2023)

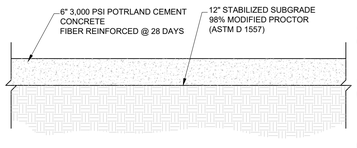

NOTE:
1. SECTION SHOWN IS BASED ON GEOTECHNICAL REPORT PREPARED BY ECS, ENTITLED SUBSURFACE EXPLORATION AND GEOTECHNICAL ENGINEERING REPORT, MAVIS - LOXAHATCHEE, FL, DATED 02/27/2025 (PROJECT #25:4345). FINAL DESIGN TO BE PROVIDED ONCE FINAL CBR'S ARE AVAILABLE ON COMPACTED SUB-BASE.

HEAVY DUTY CONCRETE PAVEMENT

NOT TO SCALE (MS-S010202 - 06/2023)

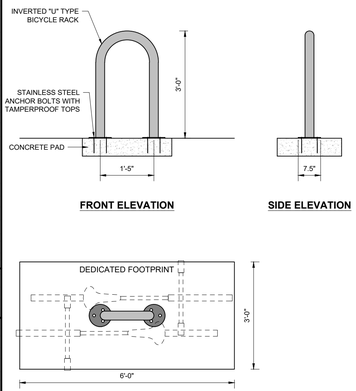

BIKE RACK SURFACE MOUNTED WITH CIRCULAR BASE

NOT TO SCALE (FL-S999902- 02/2025)

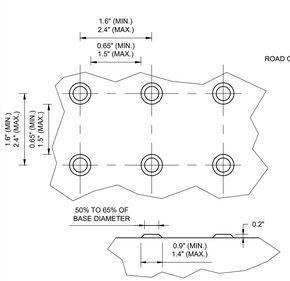

SIZE AND SPACING DETAIL

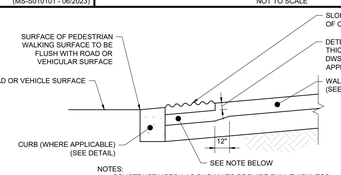

NOTES:
1. CONSTRUCT NOTCH AS SHOWN TO PROVIDE FULL THICKNESS SIDEWALK UNDER DETECTABLE WARNING SURFACE.
2. OPTIONAL: CONSTRUCT 2" MAX. CONCRETE BORDER AROUND DWS TO PROVIDE PROPER INSTALLATION.

DETECTABLE WARNING SURFACE EMBEDDING DETAIL

NOTES:
1. APPEARANCE - TRUNCATED DOMES THAT PROVIDE THE DETECTABLE WARNING SURFACE SHALL CONTRAST VISUALLY WITH ADJOINING SURFACES, EITHER LIGHT ON DARK OR DARK ON LIGHT.
2. LOCATION - CONTRACTOR TO INSTALL DETECTABLE WARNING SURFACES WHEN SIDEWALK IS WITHIN PUBLIC ROW AND WHERE INDICATED ON THE PLAN.
3. MATERIAL - TRUNCATED DOMES SHALL BE AN INTEGRAL PART OF THE ADA CURB RAMP CONSTRUCTION CONSISTING OF CAST IN PLACE COMPOSITE TILES/MAT. THE TILE/MAT MATERIAL SHALL BE A HOMOGENEOUS GLASS AND CARBON REINFORCED COMPOSITE, COLOR FAST AND UV STABLE, COMP. STRENGTH 23,800 PSI ASTM D695 AND FLEXUAL STRENGTH 24,600 PSI ASTM D796. PRECAST CONCRETE PAVER BLOCKS HAVING COMPLIANT TRUNCATED DOMES, MAY ALSO BE USED FOR THE DETECTABLE WARNING SURFACE. RUBBERIZED MATERIAL TO BE GLUED TO RAMP SURFACE SHALL NOT BE ACCEPTABLE.
4. PLACEMENT - TRUNCATED DOMES SHALL EXTEND THE FULL WIDTH OF THE TRAVEL PATH EXCLUDING FLARES. LOCATE ONE CORNER OF THE DWS AT THE BACK OF CURB OR EDGE OF WALKING SURFACE. NO OTHER POINT ON THE LEADING EDGE OF THE DWS MAY BE MORE THAN 5' AWAY FROM THE BACK OF CURB OR EDGE OF WALKING SURFACE.

DETECTABLE WARNING SURFACE (DWS)

NOT TO SCALE (BE-S030509 - 08/2023)

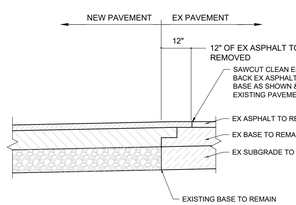

ASPHALT SAWCUT

NOT TO SCALE (FL-S010103 - 09/2024)

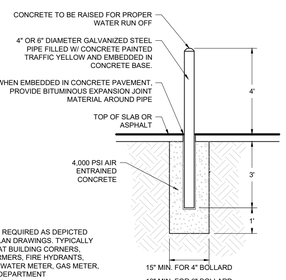

NOTES:
1. BOLLARDS REQUIRED AS DEPICTED ON SITE PLAN DRAWINGS, TYPICALLY LOCATED AT BUILDING CORNERS, TRANSFORMERS, FIRE HYDRANTS, EXTERIOR WATER METER, GAS METER, AND FIRE DEPARTMENT CONNECTIONS.
2. BOLLARD MUST RESIST A FORCE OF 12,000 POUNDS APPLIED 30" ABOVE THE DRIVING SURFACE.

4" OR 6" BOLLARD

NOT TO SCALE (NJ-S070102 - 07/2023)

"GOLF CART PARKING ONLY" SIGN

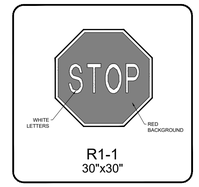

R1-1
30"x30"

BOHLER™

SITE CIVIL AND CONSULTING ENGINEERING
LAND SURVEYING
PROGRAM MANAGEMENT
LANDSCAPE ARCHITECTURE
SUSTAINABLE DESIGN
PERMITTING SERVICES
TRANSPORTATION SERVICES

THE INFORMATION, DESIGN AND CONTENT OF THIS PLAN IS PROPRIETARY AND SHALL NOT BE COPIED OR USED FOR ANY PURPOSE WITHOUT PRIOR WRITTEN AUTHORIZATION FROM BOHLER. ONLY APPROVED, SIGNED AND SEALED PLANS SHALL BE UTILIZED FOR CONSTRUCTION PURPOSES.
BOHLER, INC.

REVISIONS

REV	DATE	COMMENT	DRAWN BY / CHECKED BY
1	7/14/2025	1ST ROUND OF COMMENTS	AH / KD
2	8/11/2025	2ND ROUND OF COMMENTS	AH / KD
3	08/14/2025	QAQC COMMENTS	AH / KD
4	10/23/2025	3RD ROUND OF COMMENTS	KD / KD

811 KNOW WHAT'S BELOW ALWAYS CALL 811 BEFORE YOU DIG
It's fast. It's free. It's the law.
www.callsunshine.com

ISSUED FOR MUNICIPAL & AGENCY REVIEW & APPROVAL

THIS DRAWING IS INTENDED FOR MUNICIPAL AND/OR AGENCY REVIEW AND APPROVAL. IT IS NOT INTENDED AS A CONSTRUCTION DOCUMENT UNLESS INDICATED OTHERWISE.

PROJECT No.:	FLA230191.00-0A
DRAWN BY:	~AH/MV~
CHECKED BY:	~KD/KM ~
DATE:	10/23/2025
CAD I.D.:	P-CIVL-CNDS

PROJECT:

SITE CONSTRUCTION PLANS

FOR

MAVIS TIRES & BRAKES - DISCOUNT PRICES

MAVIS TIRES & BRAKES - CITY OF WESTLAKE
16775 PERSIMMON BLVD
WESTLAKE, FL 33470
CITY OF WESTLAKE
S 01, T 43S, R 40E

BOHLER™
600 N. WESTSHORE BLVD. SUITE 950
TAMPA, FLORIDA 33609
Phone: (813) 812-4100
Fax: (813) 812-4101
FLORIDA BUSINESS CERT. OF AUTH. No. 30780

KAYLA M. DEDRICK LICENSE No. 86107 STATE OF FLORIDA PROFESSIONAL ENGINEER

Digitally signed by Kayla Dedrick
DN: c=US, st=Florida, l=Boca Raton, o=Bohler Engineering PL, LLC, cn=Kayla Dedrick, CN=BOHLER ENGINEERING PL, LLC, l=Boca Raton, st=Florida
SERIALNUMBER=MA5202501175614B, c=US
Date: 2025.10.24 11:48:40-04'00'

This item has been digitally signed and sealed by Kayla M. Dedrick PE on the date adjacent to the seal. Signature must be verified on any electronic copies.

SHEET TITLE:

CONSTRUCTION DETAILS

SHEET NUMBER:

C-901

REVISION 4 - 10/23/2025

Oct 23, 2025
H:\2023\FLA230191.00\ENGINEERING\CAD\DRAWINGS\PLAN SETS\CIVIL SITE PLAN\REV. 0\AP-CIVIL-CNDS-FLA230191.00-0A.----\LAYOUT: C-901 DETL

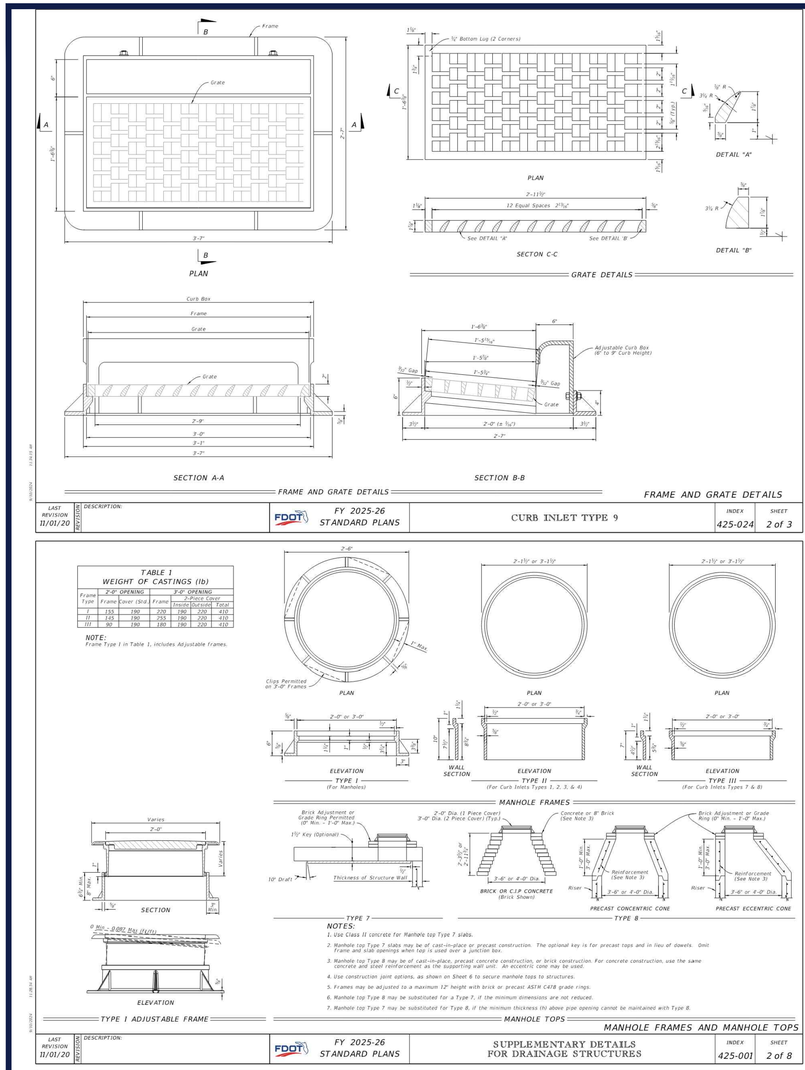

FRAME AND GRATE DETAILS

LAST REVISION	DESCRIPTION:		INDEX	SHEET
11/01/20		FY 2025-26 STANDARD PLANS	425-024	2 of 3

CURB INLET TYPE 9

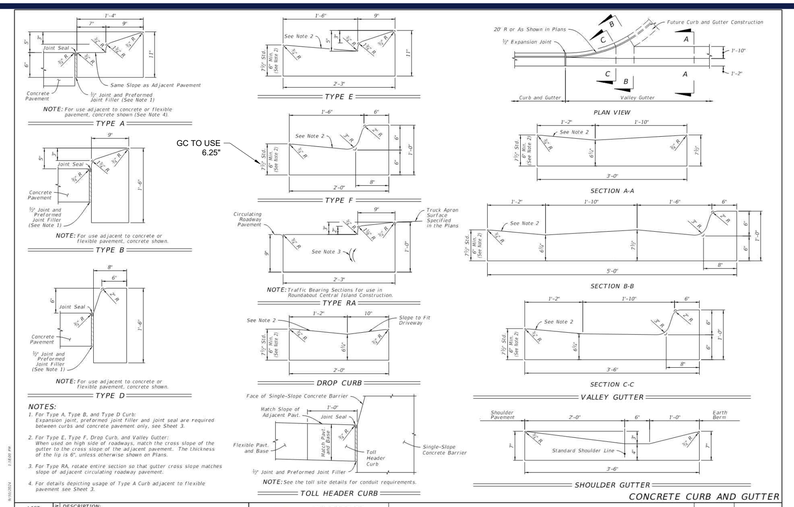

NOTES:
1. For Type A, Type B, and Type D Curb: Expansion joint, preformed joint filler and joint seal are required between curbs and concrete pavement only, see Sheet 3.
2. For Type E, Type F, Drop Curb, and Valley Gutter: When used on high side of roadways, match the cross slope of the gutter to the cross slope of the adjacent pavement. The thickness of the lip is 6", unless otherwise shown on Plans.
3. For Type RA, rotate entire section so that gutter cross slope matches slope of adjacent circulating roadway pavement.
4. For details depicting usage of Type A Curb adjacent to flexible pavement see Sheet 3.

CONCRETE CURB AND GUTTER

LAST REVISION	DESCRIPTION:		INDEX	SHEET
11/01/21		FY 2025-26 STANDARD PLANS	520-001	2 of 3

CURB AND GUTTER

TABLE 1
WEIGHT OF CASTINGS (lb)

Frame Type	2'-0" OPENING Frame	Cover (Sold)	Frame	3'-0" OPENING 2-Piece Cover Inside	Outside	Total
I	155	190	220	190	220	410
II	145	190	255	190	220	410
III	90	190	180	190	220	410

NOTE:
Frame Type I in Table 1, includes Adjustable frames.

NOTES:
1. Use Class II concrete for Manhole top Type 7 slabs.
2. Manhole top Type 7 slabs may be of cast-in-place or precast construction. The optional key is for precast tops and in lieu of dowels. Omit frame and slab openings when tap is used over a junction box.
3. Manhole top Type 8 may be of cast-in-place, precast concrete construction, or brick construction. For concrete construction, use the same concrete and steel reinforcement as the supporting wall unit. An eccentric cone may be used.
4. Use construction joint options, as shown on Sheet 6 to secure manhole tops to structures.
5. Frames may be adjusted to a maximum 12" height with brick or precast ASTM C478 grade rings.
6. Manhole top Type 8 may be substituted for a Type 7, if the minimum dimensions are not reduced.
7. Manhole top Type 7 may be substituted for Type 8, if the minimum thickness (h) above pipe opening cannot be maintained with Type 8.

MANHOLE FRAMES AND MANHOLE TOPS

LAST REVISION	DESCRIPTION:		INDEX	SHEET
11/01/20		FY 2025-26 STANDARD PLANS	425-001	2 of 8

SUPPLEMENTARY DETAILS FOR DRAINAGE STRUCTURES

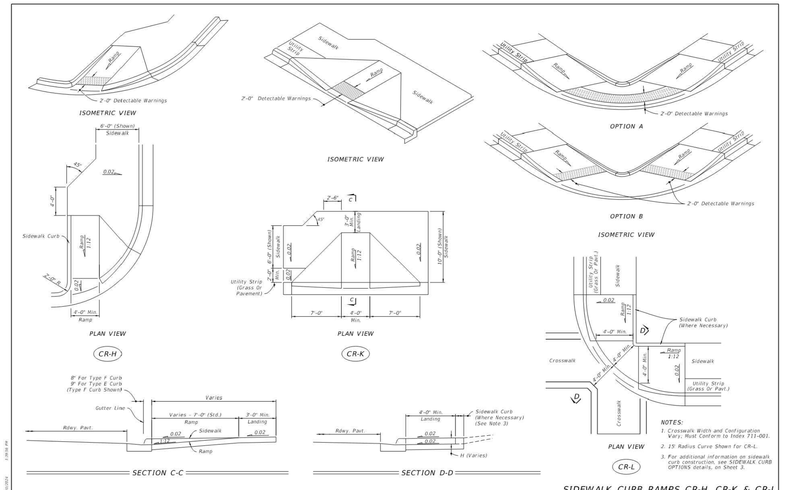

NOTES:
1. Crosswalk Width and Configuration Vary; Must Conform to Index 711-001.
2. 15' Radius Curve Shown for CR-L.
3. For additional information on sidewalk curb construction, see SIDEWALK CURB OPTIONS details, on Sheet 3.

LAST REVISION	DESCRIPTION:		INDEX	SHEET
11/01/20		FY 2025-26 STANDARD PLANS	522-002	5 of 7

DETECTABLE WARNINGS AND SIDEWALK CURB RAMPS

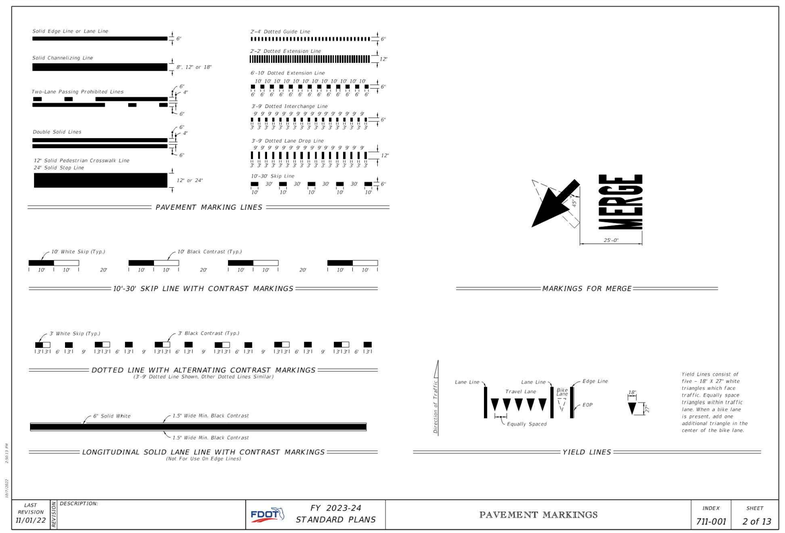

LAST REVISION	DESCRIPTION:		INDEX	SHEET
11/01/22		FY 2023-24 STANDARD PLANS	711-001	2 of 13

PAVEMENT MARKINGS

BOHLER™

SITE CIVIL AND CONSULTING ENGINEERING
LAND SURVEYING
PROGRAM MANAGEMENT
LANDSCAPE ARCHITECTURE
SUSTAINABLE DESIGN
PERMITTING SERVICES
TRANSPORTATION SERVICES

THE INFORMATION, DESIGN AND CONTENT OF THIS PLAN ARE PROPRIETARY AND SHALL NOT BE COPIED OR USED FOR ANY PURPOSE WITHOUT PRIOR WRITTEN AUTHORIZATION FROM BOHLER. ONLY APPROVED, SIGNED AND SEALED PLANS SHALL BE UTILIZED FOR CONSTRUCTION PURPOSES
© BOHLER

REVISIONS

REV	DATE	COMMENT	DRAWN BY / CHECKED BY
1	7/14/2025	1ST ROUND OF COMMENTS	AH / KD
2	8/11/2025	2ND ROUND OF COMMENTS	AH / KD
3	08/14/2025	QAQC COMMENTS	AH / KD
4	10/23/2025	3RD ROUND OF COMMENTS	KD / KD

811 KNOW WHAT'S BELOW ALWAYS CALL 811 BEFORE YOU DIG
It's fast. It's free. It's the law.
www.callsunshine.com

ISSUED FOR MUNICIPAL & AGENCY REVIEW & APPROVAL

THIS DRAWING IS INTENDED FOR MUNICIPAL AND/OR AGENCY REVIEW AND APPROVAL. IT IS NOT INTENDED AS A CONSTRUCTION DOCUMENT UNLESS INDICATED OTHERWISE.

PROJECT No.:	FLA230191.00-0A
DRAWN BY:	~AH/MV~
CHECKED BY:	~KD/KM ~
DATE:	10/23/2025
CAD I.D.:	P-CIVL-OCDS

PROJECT:

SITE CONSTRUCTION PLANS

FOR

MAVIS TIRES & BRAKES at DISCOUNT PRICES

MAVIS TIRES & BRAKES - CITY OF WESTLAKE
16775 PERSIMMON BLVD
WESTLAKE, FL 33470
CITY OF WESTLAKE
S 01, T 43S, R 40E

BOHLER™
600 N. WESTSHORE BLVD. SUITE 950
TAMPA, FLORIDA 33609
Phone: (813) 812-4100
Fax: (813) 812-4101
FLORIDA BUSINESS CERT. OF AUTH. No. 30780

This item has been digitally signed and sealed by Kayla M. Dedrick PE on the date adjacent to the seal. Signature must be verified on any electronic copies.

SHEET TITLE:

FDOT DETAILS

SHEET NUMBER:

C-902

REVISION 4 - 10/23/2025

Oct 23, 2025
H:\2023\FLA230191.00\ENGINEERING\CAD\DRAWINGS\PLAN SETS\CIVIL SITE PLAN\REV 0\AP-CIVL-OCDS-FLA230191.00-0A----LAYOUT: C-902 OCDS

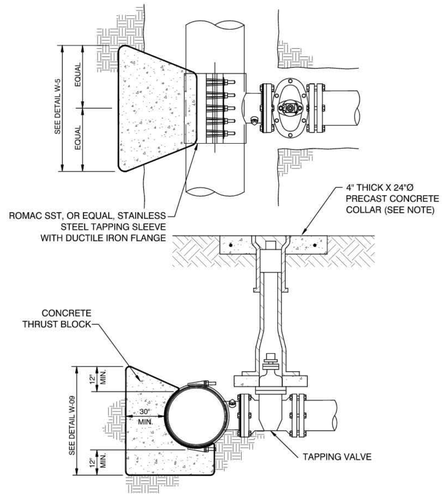

NOTE: TWO INCH (2") DIAMETER BRASS DISCS SHALL BE GLUED TO THE CLOSEST CURB INDICATING THE DIRECTION TO THE VALVE. GENERALLY, 2 DISCS SHALL BE REQUIRED FOR EACH VALVE (90° APART).

LATEST REVISION DATE : 05/04/2021 — NOT TO SCALE

CAULFIELD & WHEELER, INC. CIVIL ENGINEERING - LAND PLANNING LANDSCAPE ARCHITECTURE - SURVEYING 7900 GLADES ROAD - SUITE 100 BOCA RATON, FLORIDA 33434 PHONE (561) 392-1991 / FAX (561) 750-1452

TAPPING SLEEVE & VALVE DETAIL

SEMINOLE Improvement District

GU-04

FILE NAME: 04_SID GENERAL UTILITY DETAILS (GU).DWG

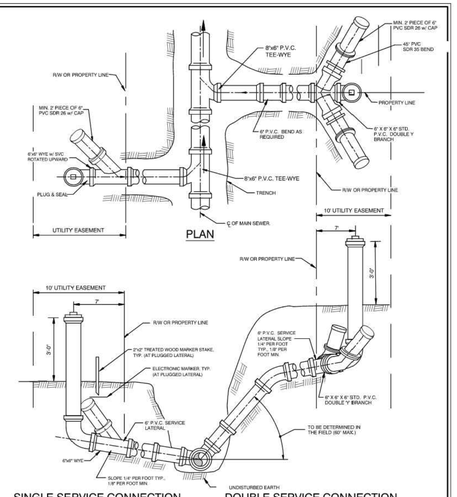

NOTES:
1. SERVICE LATERALS SHALL TERMINATE 7' INSIDE U.E.AT PROPERTY LINE AT A HEIGHT OF 3 FEET ABOVE GRADE, PLUGGED WATERTIGHT AND MARKED WITH A 2"x2" TREATED STAKE AND ELECTRONIC MARKER
2. THE MINIMUM DIAMETER OF ALL SERVICE LATERALS SHALL BE 6 INCHES.
3. CONNECTION TO DISTRICT LATERAL SHALL BE MADE WITH A CLEANOUT.

LATEST REVISION DATE : 05/06/2021 — NOT TO SCALE

CAULFIELD & WHEELER, INC. CIVIL ENGINEERING - LAND PLANNING LANDSCAPE ARCHITECTURE - SURVEYING 7900 GLADES ROAD - SUITE 100 BOCA RATON, FLORIDA 33434 PHONE (561) 392-1991 / FAX (561) 750-1452

TYPICAL SEWER SERVICE CONNECTION

SEMINOLE Improvement District

SS-03

FILE NAME: 05_SID SANITARY SEWER DETAILS (SS).DWG

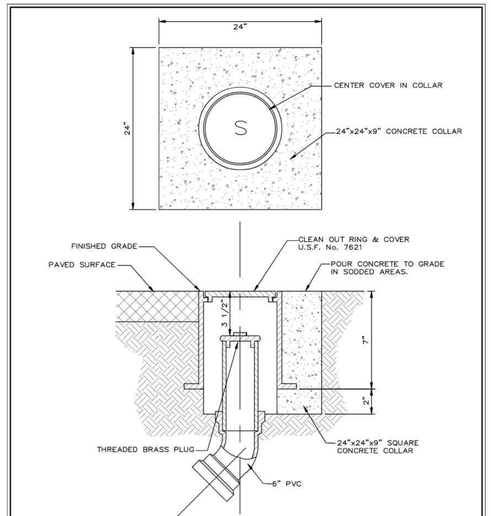

NOTES:
1. CLEANOUTS TO BE LOCATED IN GRASS AREA.
2. THE COVER TO BE MARKED "S".
3. CLEANOUTS TO BE INSTALLED PRIOR TO C/O.

LATEST REVISION DATE : 05/06/2021 — NOT TO SCALE

CAULFIELD & WHEELER, INC. CIVIL ENGINEERING - LAND PLANNING LANDSCAPE ARCHITECTURE - SURVEYING 7900 GLADES ROAD - SUITE 100 BOCA RATON, FLORIDA 33434 PHONE (561) 392-1991 / FAX (561) 750-1452

TYPICAL CLEANOUT

SEMINOLE Improvement District

SS-04

FILE NAME: 05_SID SANITARY SEWER DETAILS (SS).DWG

GENERAL WATER NOTES

1. WATER SYSTEM COMPONENTS SHALL BE INSTALLED IN STRICT ACCORDANCE WITH ALL LOCAL CODES AND REGULATIONS, TESTED, CLEANED, DISINFECTED AND BACTERIOLOGICALLY CLEARED FOR SERVICE IN ACCORDANCE WITH THE LATEST AWWA STANDARDS AND CHAPTER 62-555, FLORIDA ADMINISTRATIVE CODE.

2. ALL PIPE SHALL BEAR THE "NSF" SEAL FOR POTABLE WATER.

3. WATER MAINS SHALL BE BLUE PVC CONFORMING TO AWWA C-900, DR 18. ALL COUPLINGS, CLEANING COMPOUNDS, SOLVENTS, LUBRICANTS, AND PIPE PREPARATION FOR LAYING, SHALL BE IN ACCORDANCE WITH THE MANUFACTURER'S LATEST RECOMMENDATIONS.

4. DEPTH OF WATER LINES FROM CROWN OF PIPE TO FINISHED GRADE SHALL BE 36".

5. WATER MAINS TO BE LOCATED 3' FROM RIGHT OF WAY, UNLESS OTHERWISE NOTED.

6. WHEN POOL EQUIPMENT IS TO BE INSTALLED AN AIR-GAP OF 3" MINIMUM SHALL BE MAINTAINED BETWEEN EQUIPMENT AND WATER AND SANITARY SYSTEMS.

7. ALL POTABLE WATER MAINS THAT ARE NOT BLUE PVC SHALL BE INSTALLED WITH IDENTIFIER TAPE LOCATED ON TOP OF PIPE & SECURED TAPE SHALL BE 3" VINYL BLUE IN COLOR WITH LETTERING INDICATING "POTABLE WATER" AT TWO FOOT INTERVALS ALONG TAPE.

LATEST REVISION DATE : 04/14/2021 — NOT TO SCALE

CAULFIELD & WHEELER, INC. CIVIL ENGINEERING - LAND PLANNING LANDSCAPE ARCHITECTURE - SURVEYING 7900 GLADES ROAD - SUITE 100 BOCA RATON, FLORIDA 33434 PHONE (561) 392-1991 / FAX (561) 750-1452

POTABLE WATER NOTES (1 of 3)

SEMINOLE Improvement District

PW-01

FILE NAME: 07_SID POTABLE WATER DETAILS (PW).

POTABLE WATER CLEARANCE REQUIREMENTS

HORIZONTAL SEPARATION: BETWEEN UNDERGROUND WATER MAINS AND SANITARY OR STORM SEWERS, WASTEWATER OR STORMWATER FORCE MAIN, RECLAIMED WATER PIPELINES, AND ON-SITE SEWAGE TREATMENT AND DISPOSAL SYSTEMS.

1. NEW OR RELOCATED, UNDERGROUND WATER MAINS SHALL BE LAID TO PROVIDE A HORIZONTAL DISTANCE OF AT LEAST FIVE FEET BETWEEN THE OUTSIDE OF THE WATERMAIN AND THE OUTSIDE OF ANY EXISTING OR PROPOSED STORM SEWER, STORMWATER FORCE MAIN, OR PIPELINE CONVEYING RECLAIMED WATER REGULATED UNDER PART III OF CHAPTER 62-610, F.A.C.

2. NEW OR RELOCATED, UNDERGROUND WATER MAINS SHALL BE LAID TO PROVIDE HORIZONTAL DISTANCE OF TEN FEET BETWEEN THE OUTSIDE OF THE WATER MAIN AND THE OUTSIDE OF ANY EXISTING OR PROPOSED VACUUM-TYPE SANITARY SEWER.

3. NEW OR RELOCATED, UNDERGROUND WATER MAINS SHALL BE LAID TO PROVIDE A HORIZONTAL DISTANCE OF TEN FEET BETWEEN THE OUTSIDE OF THE WATER MAIN AND THE OUTSIDE OF ANY EXISTING OR PROPOSED GRAVITY-OR PRESSURE-TYPE SANITARY SEWER, WASTEWATER FORCE MAIN, OR PIPELINE CONVEYING RECLAIMED WATER NOT REGULATED UNDER PART III OF CHAPTER 62-610, F.A.C. THE MINIMUM HORIZONTAL SEPARATION DISTANCE BETWEEN WATER MAINS AND GRAVITY-TYPE SANITARY SEWERS SHALL BE REDUCED TO FIVE FEET WHERE THE BOTTOM OF THE WATER MAIN IS LAID AT LEAST TWELVE INCHES ABOVE THE TOP OF THE SEWER.

4. NEW OR RELOCATED, UNDERGROUND WATER MAINS SHALL BE LAID TO PROVIDE A HORIZONTAL DISTANCE OF AT LEAST TEN FEET BETWEEN THE OUTSIDE OF THE WATER MAIN AND ALL PARTS OF ANY EXISTING OR PROPOSED "ON-SITE SEWAGE TREATMENT AND DISPOSAL SYSTEM" AS DEFINED IN SECTION 381.0065(2), F.S., AND RULE 64E-6002, F.A.C.

5. WHERE AN UNDERGROUND WATER MAIN IS BEING LAID LESS THAN THE REQUIRED MINIMUM HORIZONTAL DISTANCE FROM ANOTHER PIPELINE AND WHERE AN UNDERGROUND WATER MAIN IS CROSSING ANOTHER PIPELINE AND JOINTS IN THE WATER MAIN ARE BEING LOCATED LESS THAN THE REQUIRED MINIMUM DISTANCE FROM JOINTS IN OTHER PIPELINE:
   A. USE OF PRESSURE-RATED PIPE CONFORMING TO THE AMERICAN WATER WORKS ASSOCIATION STANDARDS INCORPORATED INTO RULE 62-555.330, F.A.C., FOR THE OTHER PIPELINE IF IT IS GRAVITY-OR VACUUM-TYPE PIPELINE;
   B. USE WELDED, FUSED OR OTHERWISE RESTRAINED JOINTS FOR EITHER WATER MAIN OR THE OTHER PIPELINE; OR
   C. USE OF WATERTIGHT CASING PIPE OR CONCRETE ENCASEMENT AT LEAST FOUR INCHES THICK FOR EITHER THE WATER MAIN OR THE OTHER PIPELINE.

LATEST REVISION DATE : 9/05/18 — NOT TO SCALE

CAULFIELD & WHEELER, INC. CIVIL ENGINEERING - LAND PLANNING LANDSCAPE ARCHITECTURE - SURVEYING 7900 GLADES ROAD - SUITE 100 BOCA RATON, FLORIDA 33434 PHONE (561) 392-1991 / FAX (561) 750-1452

POTABLE WATER NOTES (2 of 3)

SEMINOLE Improvement District

PW-02

FILE NAME: 07_SID POTABLE WATER DETAILS (PW).

POTABLE WATER CLEARANCE REQUIREMENTS

VERTICAL SEPARATION: BETWEEN UNDERGROUND WATER MAINS AND SANITARY OR STORM SEWERS, WASTEWATER OR STORMWATER FORCE MAIN, RECLAIMED WATER PIPELINES.

1. NEW OR RELOCATED, UNDERGROUND WATER MAINS CROSSING ANY EXISTING OR PROPOSED GRAVITY-OR VACUUM-TYPE SANITARY SEWER OR STORM SEWER SHALL BE LAID SO THE OUTSIDE OF THE WATER MAIN IS AT LEAST TWELVE INCHES, AND PREFERABLY EIGHTEEN INCHES, ABOVE OR AT LEAST EIGHTEEN INCHES BELOW THE OUTSIDE OF THE OTHER PIPELINE. HOWEVER, IT IS PREFERABLE TO LAY THE WATER MAIN ABOVE THE OTHER PIPELINE.

2. NEW OR RELOCATED, UNDERGROUND WATER MAINS CROSSING ANY EXISTING OR PROPOSED PRESSURE-TYPE SANITARY SEWER, WASTEWATER OR STORMWATER FORCE MAIN, OR PIPELINE CONVEYING RECLAIMED WATER SHALL BE LAID SO THE OUTSIDE OF THE WATER MAIN IS AT LEAST EIGHTEEN INCHES ABOVE OR BELOW THE OUTSIDE OF THE OTHER PIPELINE. HOWEVER, IT IS PREFERABLE TO LAY THE WATER MAIN ABOVE THE OTHER PIPELINE.

3. AT THE UTILITY CROSSINGS DESCRIBED IN PARAGRAPHS 1 AND 2 ABOVE, ONE FULL LENGTH OF WATER MAIN PIPE SHALL BE CENTERED ABOVE OR BELOW THE OTHER PIPELINE SO THE WATER MAIN JOINTS WILL BE AS FAR AS POSSIBLE FROM THE OTHER PIPELINE. ALTERNATIVELY, AT SUCH CROSSINGS, THE PIPES SHALL BE ARRANGED SO THAT ALL WATER MAIN JOINTS ARE AT LEAST THREE FEET FROM ALL JOINTS IN VACUUM-TYPE SANITARY SEWERS, STORMSEWERS, STORMWATER FORCE MAINS, OR PIPELINES CONVEYING RECLAIMED WATER REGULATED UNDER PART III OF CHAPTER 62-610, F.A.C. AND AT LEAST SIX FEET FROM ALL JOINTS IN GRAVITY-OR PRESSURE-TYPE SANITARY SEWERS, WASTEWATER FORCE MAINS, OR PIPELINES CONVEYING RECLAIMED WATER NOT REGULATED UNDER PART III OF CHAPTER 62-610, F.A.C.

4. SEPARATION BETWEEN WATER MAINS AND SANITARY OR STORM SEWER MANHOLES.
   A. NO WATER MAIN SHALL PASS THROUGH, OR COME IN CONTACT WITH, ANY PART OF A SANITARY MANHOLE.
   B. WATER MAINS SHALL NOT BE CONSTRUCTED OR ALTERED TO PASS THROUGH, OR COME INTO CONTACT WITH ANY PART OF A STORM SEWER MANHOLE OR INLET STRUCTURE.

5. WHERE AN UNDERGROUND WATER MAIN IS BEING LAID LESS THAN THREE FEET HORIZONTALLY FROM ANOTHER PIPELINE AND WHERE AN UNDERGROUND WATER MAIN IS CROSSING ANOTHER PIPELINE AND IS BEING LAID LESS THAN THE REQUIRED MINIMUM VERTICAL DISTANCE FROM THE OTHER PIPELINE:
   A. USE OF PIPE, OR CASING PIPE, HAVING HIGH IMPACT STRENGTH (I.E., HAVING AN IMPACT STRENGTH AT LEAST EQUAL TO THAT OF 0.25-INCH-THICK DUCTILE IRON PIPE) OR CONCRETE ENCASEMENT AT LEAST FOUR INCHES THICK FOR THE WATER MAIN: AND
   B. USE OF PIPE, OR CASING PIPE, HAVING HIGH IMPACT STRENGTH (I.E., HAVING AN IMPACT STRENGTH AT LEAST EQUAL TO THAT OF 0.25-INCH-THICK DUCTILE IRON PIPE) OR CONCRETE ENCASEMENT AT LEAST FOUR INCHEST THICK FOR THE OTHER PIPELINE IF IT IS NEW AND IS CONVEYING WASTEWATER OR RECLAIMED WATER.

LATEST REVISION DATE : 9/05/18 — NOT TO SCALE

CAULFIELD & WHEELER, INC. CIVIL ENGINEERING - LAND PLANNING LANDSCAPE ARCHITECTURE - SURVEYING 7900 GLADES ROAD - SUITE 100 BOCA RATON, FLORIDA 33434 PHONE (561) 392-1991 / FAX (561) 750-1452

POTABLE WATER NOTES (3 of 3)

SEMINOLE Improvement District

PW-03

FILE NAME: 07_SID POTABLE WATER DETAILS (PW).

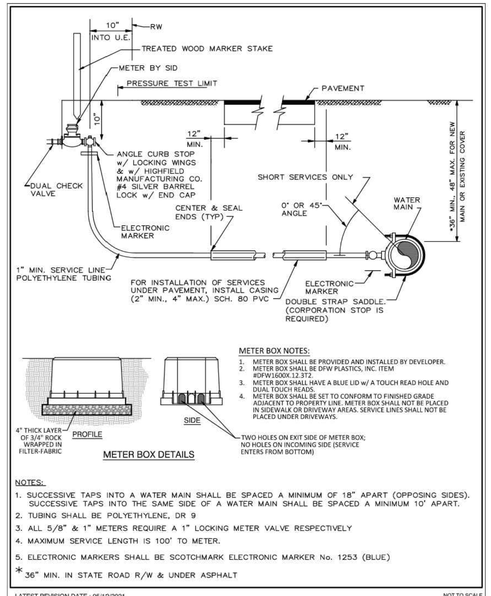

METER BOX NOTES:
1. METER BOX SHALL BE PROVIDED AND INSTALLED BY DEVELOPER.
2. METER BOX SHALL BE DFW PLASTICS, INC. ITEM #DFW1600X.12.372.
3. METER BOX SHALL HAVE A BLUE LID w/ A TOUCH READ HOLE AND DUAL TOUCH READS.
4. METER BOX SHALL BE SET TO CONFORM TO FINISHED GRADE ADJACENT TO PROPERTY LINE. METER BOX SHALL NOT BE PLACED IN SIDEWALK OR DRIVEWAY AREAS. SERVICE LINES SHALL NOT BE PLACED UNDER DRIVEWAYS.

NOTES:
1. SUCCESSIVE TAPS INTO A WATER MAIN SHALL BE SPACED A MINIMUM OF 18" APART (OPPOSING SIDES). SUCCESSIVE TAPS INTO THE SAME SIDE OF A WATER MAIN SHALL BE SPACED A MINIMUM 10' APART.
2. TUBING SHALL BE POLYETHYLENE, DR 9
3. ALL 5/8" & 1" METERS REQUIRE A 1" LOCKING METER VALVE RESPECTIVELY
4. MAXIMUM SERVICE LENGTH IS 100' TO METER.
5. ELECTRONIC MARKERS SHALL BE SCOTCHMARK ELECTRONIC MARKER No. 1253 (BLUE)

*36" MIN. IN STATE ROAD R/W & UNDER ASPHALT

LATEST REVISION DATE : 05/12/2021 — NOT TO SCALE

CAULFIELD & WHEELER, INC. CIVIL ENGINEERING - LAND PLANNING LANDSCAPE ARCHITECTURE - SURVEYING 7900 GLADES ROAD - SUITE 100 BOCA RATON, FLORIDA 33434 PHONE (561) 392-1991 / FAX (561) 750-1452

TYPICAL SERVICE CONNECTION FOR 5/8", 1", OR 2" METER

SEMINOLE Improvement District

PW-04

FILE NAME: 07_SID POTABLE WATER DETAILS (PW).

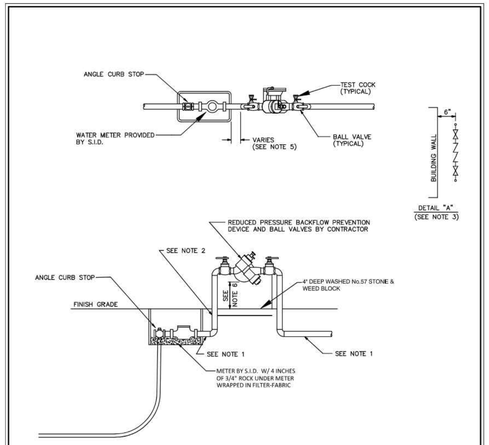

NOTES:
1. TYPE "K" COPPER TUBING (SOFT DRAWN) OR POLYETHYLENE TUBING SDR 9 COPPER TUBE SIZE.
2. BOTH RISERS SHALL BE TYPE "K" COPPER TUBING (HARD DRAWN) WITH COPPER/BRASS "SWEAT" FITTINGS AND ADAPTERS. ONLY LEAD FREE SOLDER AND FLUX SHALL BE PERMITTED.
3. WHEN THE DEVICE IS INSTALLED PARALLEL TO A BUILDING WALL THERE SHALL BE A MIN. OF 6" BETWEEN THE EDGE OF THE DEVICE AND THE BUILDING WALL.
4. BACKFLOW PREVENTION DEVICE SHALL BE EQUIPPED WITH BALL VALVES IN LIEU OF GATE VALVES.
5. BACKFLOW PREVENTOR MUST BE INSTALLED AS CLOSE TO SOURCE OF SUPPLY AS POSSIBLE.
6. 18" MIN./30" MAX. TO CLOSEST PART OF BACKFLOW PREVENTER DEVICE.

LATEST REVISION DATE : 05/04/2021 — NOT TO SCALE

CAULFIELD & WHEELER, INC. CIVIL ENGINEERING - LAND PLANNING LANDSCAPE ARCHITECTURE - SURVEYING 7900 GLADES ROAD - SUITE 100 BOCA RATON, FLORIDA 33434 PHONE (561) 392-1991 / FAX (561) 750-1452

TYPICAL COMMERCIAL METER, BACKFLOW PREVENTION DETAIL

SEMINOLE Improvement District

PW-06

FILE NAME: 07_SID POTABLE WATER DETAILS (PW).

BOHLER™

SITE CIVIL AND CONSULTING ENGINEERING
LAND SURVEYING
PROGRAM MANAGEMENT
LANDSCAPE ARCHITECTURE
SUSTAINABLE DESIGN
PERMITTING SERVICES
TRANSPORTATION SERVICES

THE INFORMATION, DESIGN AND CONTENT OF THIS PLAN ARE PROPRIETARY AND SHALL NOT BE COPIED OR USED FOR ANY PURPOSE WITHOUT PRIOR WRITTEN AUTHORIZATION FROM BOHLER. ONLY APPROVED, SIGNED AND SEALED PLANS SHALL BE UTILIZED FOR CONSTRUCTION PURPOSES.
© BOHLER, INC.

REVISIONS

REV	DATE	COMMENT	DRAWN BY / CHECKED BY
1	7/14/2025	1ST ROUND OF COMMENTS	AH / KD
2	8/11/2025	2ND ROUND OF COMMENTS	AH / KD
3	08/14/2025	QAQC COMMENTS	AH / KD
4	10/23/2025	3RD ROUND OF COMMENTS	KD / KD

811 KNOW WHAT'S BELOW ALWAYS CALL 811 BEFORE YOU DIG
It's fast. It's free. It's the law.
www.callsunshine.com

ISSUED FOR MUNICIPAL & AGENCY REVIEW & APPROVAL

THIS DRAWING IS INTENDED FOR MUNICIPAL AND/OR AGENCY REVIEW AND APPROVAL. IT IS NOT INTENDED AS A CONSTRUCTION DOCUMENT UNLESS INDICATED OTHERWISE.

PROJECT No.: FLA230191.00-0A
DRAWN BY: ~AH/MV~
CHECKED BY: ~KD/KM ~
DATE: 10/23/2025
CAD I.D.: P-CIVL-OCDS

PROJECT:

SITE CONSTRUCTION PLANS

FOR

MAVIS TIRES & BRAKES - DISCOUNT PRICES

MAVIS TIRES & BRAKES - CITY OF WESTLAKE
16775 PERSIMMON BLVD
WESTLAKE, FL 33470
CITY OF WESTLAKE
S 01, T 43S, R 40E

BOHLER™
600 N. WESTSHORE BLVD. SUITE 950
TAMPA, FLORIDA 33609
Phone: (813) 812-4100
Fax: (813) 812-4101
FLORIDA BUSINESS CERT. OF AUTH. No. 30780

This item has been digitally signed and sealed by Kayla M. Dedrick PE on the date adjacent to the seal. Signature must be verified on any electronic copies.

SHEET TITLE:
SEMINOLE IMPROVEMENT DISTRICT DETAILS

SHEET NUMBER:
C-903

REVISION 4 - 10/23/2025

Oct 23, 2025
H:\2023\FLA230191.00\ENGINEERING\CAD\DRAWINGS\PLAN SETS\CIVIL SITE PLAN\REV. 0A\P-CIVL-OCDS-FLA230191.00-0A.----\LAYOUT: C-903 OCDS (2)
KO

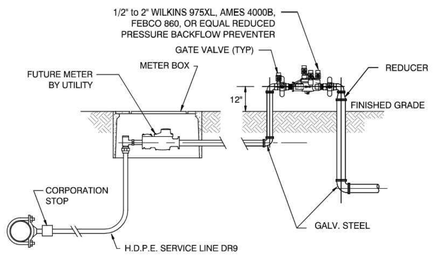

NOTE: SEE APPROPRIATE ASSEMBLY DETAILS FOR ADDITIONAL INFORMATION

TO BE USED FOR HIGHER RISK FACILITIES ONLY, SUCH AS:

COMMERCIAL CAR WASH, COMMERCIAL LAUNDRIES, PHOTO PROCESSING FACILITIES, PEST CONTROL COMPANIES, COOLING TOWERS, HOSPITALS, MEDICAL & DENTAL OFFICES, ASSISTED LIVING/NURSING FACILITIES, VETERINARIAN CLINICS, WASTEWATER LIFT STATIONS (IF SERVED BY POTABLE WATER), WASTEWATER TREATMENT PLANT, MAINTENANCE FACILITY (GOLF, LANDSCAPE, ETC.), GROCERY STORE, BEAUTY SALON/SPA, HOME IMPROVEMENT/HARDWARE, FUNERAL HOME AND EYE CARE CLINICS.

LATEST REVISION DATE : 09/05/18 — NOT TO SCALE

CAULFIELD & WHEELER, INC. — CIVIL ENGINEERING · LAND PLANNING · LANDSCAPE ARCHITECTURE · SURVEYING — 7900 GLADES ROAD · SUITE 100, BOCA RATON, FLORIDA 33434, PHONE (561) 392-1991 / FAX (561) 750-1452

BACKFLOW PREVENTER ASSEMBLY DETAIL

SEMINOLE Improvement District — PW-07

FILE NAME: 07_SID POTABLE WATER DETAILS (PW)

GENERAL REUSE AND NON-POTABLE IRRIGATION NOTES

1. ALL REUSE AND NON-POTABLE IRRIGATION PIPING TO BE A SOLID PURPLE COLOR.

2. REUSE MAINS SHALL BE PVC CONFORMING TO AWWA C-900, DR 18. ALL COUPLINGS, CLEANING COMPOUNDS, SOLVENTS, LUBRICANTS, AND PIPE PREPARATION, FOR LAYING, SHALL BE IN ACCORDANCE WITH THE PIPE MANUFACTURER'S LATEST RECOMMENDATIONS.

3. DEPTH OF REUSE AND NON-POTABLE IRRIGATION LINES TO BE 48" BELOW FINISHED GRADE.

4. ALL REUSE AND NON-POTABLE IRRIGATION MAINS THAT ARE NOT PURPLE PVC SHALL BE INSTALLED WITH IDENTIFIER TAPE LOCATED ON TOP OF PIPE & SECURED TAPE SHALL BE 3" VINYL PURPLE IN COLOR. WITH LETTERING INDICATING "REUSE" OR "NON-POTABLE IRRIGATION" AT TWO FOOT INTERVALS ALONG TAPE.

LATEST REVISION DATE : 09/05/18 — NOT TO SCALE

CAULFIELD & WHEELER, INC. — CIVIL ENGINEERING · LAND PLANNING · LANDSCAPE ARCHITECTURE · SURVEYING — 7900 GLADES ROAD · SUITE 100, BOCA RATON, FLORIDA 33434, PHONE (561) 392-1991 / FAX (561) 750-1452

RECLAIMED WATER NOTES

SEMINOLE Improvement District — RW-01

FILE NAME: 08_SID RECLAIMED WATER DETAILS (RW)

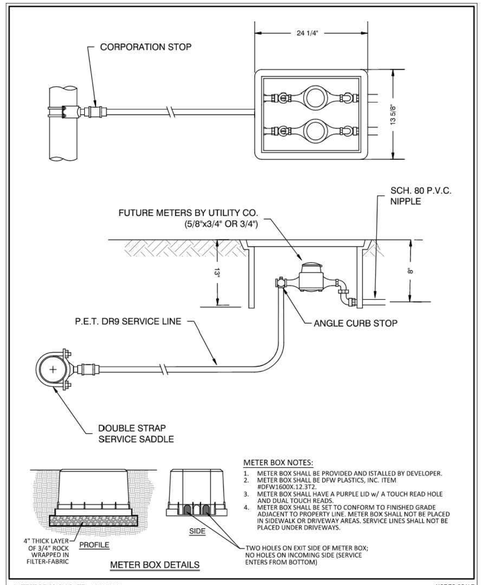

METER BOX NOTES:
1. METER BOX SHALL BE PROVIDED AND ISTALLED BY DEVELOPER.
2. METER BOX SHALL BE DFW PLASTICS, INC. ITEM #DFW1600X.12.3T2.
3. METER BOX SHALL HAVE A PURPLE LID w/ A TOUCH READ HOLE AND DUAL TOUCH READS.
4. METER BOX SHALL BE SET TO CONFORM TO FINISHED GRADE ADJACENT TO PROPERTY LINE. METER BOX SHALL NOT BE PLACED IN SIDEWALK OR DRIVEWAY AREAS. SERVICE LINES SHALL NOT BE PLACED UNDER DRIVEWAYS.

LATEST REVISION DATE : 05/04/2021 — NOT TO SCALE

CAULFIELD & WHEELER, INC. — CIVIL ENGINEERING · LAND PLANNING · LANDSCAPE ARCHITECTURE · SURVEYING — 7900 GLADES ROAD · SUITE 100, BOCA RATON, FLORIDA 33434, PHONE (561) 392-1991 / FAX (561) 750-1452

RECLAIMED WATER METER ASSEMBLY DETAIL

SEMINOLE Improvement District — RW-02

FILE NAME: 08_SID RECLAIMED WATER DETAILS (RW)

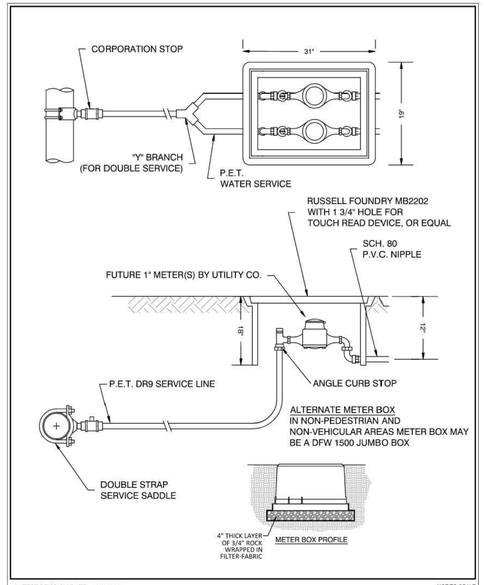

LATEST REVISION DATE : 05/04/2021 — NOT TO SCALE

CAULFIELD & WHEELER, INC. — CIVIL ENGINEERING · LAND PLANNING · LANDSCAPE ARCHITECTURE · SURVEYING — 7900 GLADES ROAD · SUITE 100, BOCA RATON, FLORIDA 33434, PHONE (561) 392-1991 / FAX (561) 750-1452

1 IN. RECLAIMED WATER METER ASSEMBLY DETAIL

SEMINOLE Improvement District — RW-03

FILE NAME: 08_SID RECLAIMED WATER DETAILS (RW)

Rev A (11-12-2020)

SAFL BAFFLE BRACING REQUIREMENTS

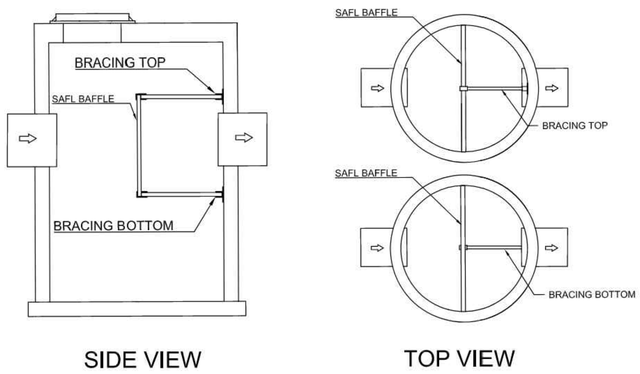

Guidance for Cross Bracing - SAFL Baffle

Pipe Inside Diameter (Inches)	Bracing Needed Above This Flow (CFS)	Max Flow with 2 Braces (1 top, bottom)	Max Flow with 4 Braces (2 top, 2 bottom)
24	20	30	40
30	30	45	60
36	40	60	75
42	55	70	90
48	75	105	130
60	110	160	200

Note: Flows shown are maximum design flows with a slope of less than 3%. Contact Upstream Technologies if pipe slopes are 3% or greater.

Also see: Stacking Guide & Sizing Guide

PATENT PROTECTED Patents: US #8663466B2 - US #8715507B2 - US #9506237B2 - CA #2742207

This generic detail does not encompass the sizing, fit, and applicability of the SAFL Baffle for this specific project. It is the ultimate responsibility of the design engineer to assure that the design is in compliance with all applicable laws and regulations. The SAFL Baffle is a patented technology of Upstream Technologies, Inc. Upstream Technologies does not approve plans, sizing, or system designs.

SAFL BAFFLE BRACING DETAIL
UPSTREAM TECHNOLOGIES INC.
5201 East River Road, Suite 303
Fridley, MN 55421
651-237-5123

SAFL BAFFLE

Rev A (11-12-2020)

SAFL BAFFLE STACKING REQUIREMENTS

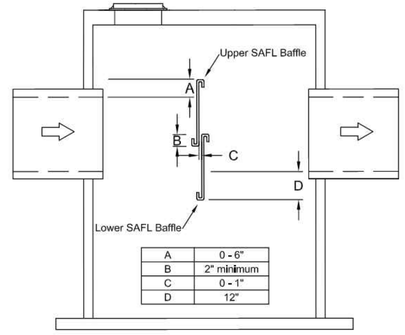

A	0 - 6"
B	2" minimum
C	0 - 1"
D	12"

Bracing for Stacked Baffles

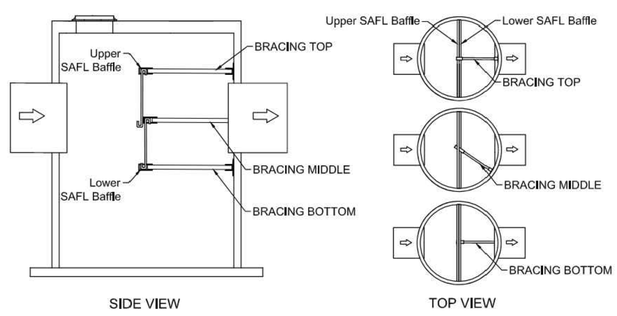

Also see: Bracing Guide & Sizing Guide

PATENT PROTECTED Patents: US #8663466B2 - US #8715507B2 - US #9506237B2 - CA #2742207

This generic detail does not encompass the sizing, fit, and applicability of the SAFL Baffle for this specific project. It is the ultimate responsibility of the design engineer to assure that the design is in compliance with all applicable laws and regulations. The SAFL Baffle is a patented technology of Upstream Technologies, Inc. Upstream Technologies does not approve plans, sizing, or system designs.

SAFL BAFFLE STACKING DETAIL
UPSTREAM TECHNOLOGIES INC.
5201 East River Road, Suite 303
Fridley, MN 55421
651-237-5123
www.upstreamtechnologies.us

SAFL BAFFLE

Oct 23, 2025

BOHLER™

SITE CIVIL AND CONSULTING ENGINEERING
LAND SURVEYING
PROGRAM MANAGEMENT
LANDSCAPE ARCHITECTURE
SUSTAINABLE DESIGN
PERMITTING SERVICES
TRANSPORTATION SERVICES

THE INFORMATION, DESIGN AND CONTENT OF THIS PLAN ARE PROPRIETARY AND SHALL NOT BE EXPIRED OR USED FOR ANY PURPOSE WITHOUT PRIOR WRITTEN AUTHORIZATION FROM BOHLER. ONLY APPROVED, SIGNED AND SEALED PLANS SHALL BE UTILIZED FOR CONSTRUCTION PURPOSES.
© 2025 BOHLER, INC.

REVISIONS

REV	DATE	COMMENT	DRAWN BY / CHECKED BY
1	7/14/2025	1ST ROUND OF COMMENTS	AH / KD
2	8/11/2025	2ND ROUND OF COMMENTS	AH / KD
3	08/14/2025	QAQC COMMENTS	AH / KD
4	10/23/2025	3RD ROUND OF COMMENTS	KD / KD

811 KNOW WHAT'S BELOW ALWAYS CALL 811 BEFORE YOU DIG
It's fast. It's free. It's the law.
www.callsunshine.com

ISSUED FOR MUNICIPAL & AGENCY REVIEW & APPROVAL

THIS DRAWING IS INTENDED FOR MUNICIPAL AND/OR AGENCY REVIEW AND APPROVAL. IT IS NOT INTENDED AS A CONSTRUCTION DOCUMENT UNLESS INDICATED OTHERWISE.

PROJECT No.:	FLA230191.00-0A
DRAWN BY:	~AH/MV~
CHECKED BY:	~KD/KM ~
DATE:	10/23/2025
CAD I.D.:	P-CIVL-OCDS

PROJECT:

SITE CONSTRUCTION PLANS

FOR

MAVIS TIRES & BRAKES — DISCOUNT PRICES

MAVIS TIRES & BRAKES - CITY OF WESTLAKE

16775 PERSIMMON BLVD
WESTLAKE, FL 33470
CITY OF WESTLAKE
S 01, T 43S, R 40E

BOHLER™
600 N. WESTSHORE BLVD. SUITE 950
TAMPA, FLORIDA 33609
Phone: (813) 812-4100
Fax: (813) 812-4101
FLORIDA BUSINESS CERT. OF AUTH. No. 30780

This item has been digitally signed and sealed by Kayla M. Dedrick PE on the date adjacent to the seal. Signature must be verified on any electronic copies.

SHEET TITLE:

SEMINOLE IMPROVEMENT DISTRICT DETAILS

SHEET NUMBER:

C-904

REVISION 4 - 10/23/2025

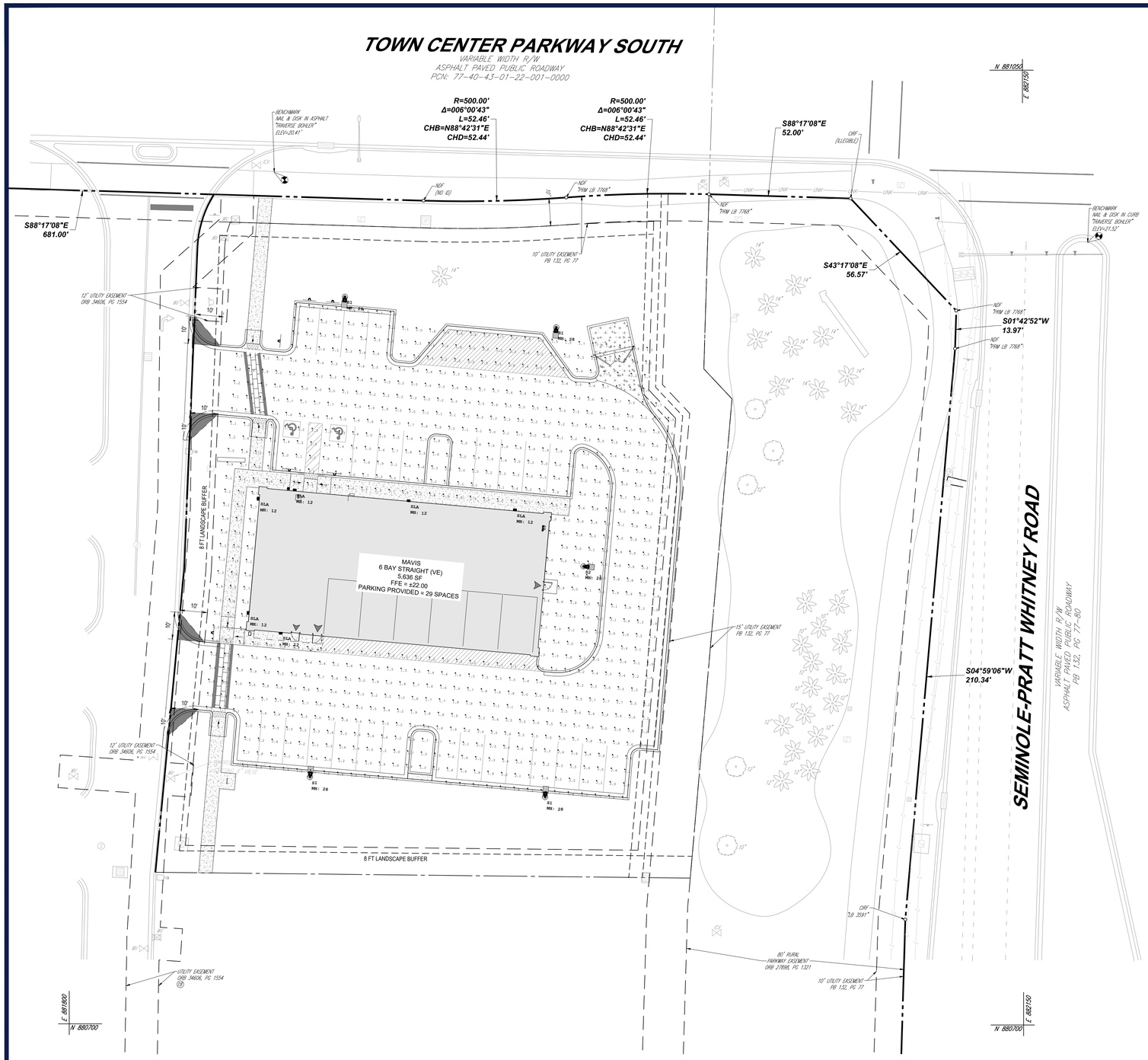

THIS PLAN TO BE UTILIZED FOR LIGHTING PURPOSES ONLY

BOHLER™

SITE CIVIL AND CONSULTING ENGINEERING
LAND SURVEYING
PROGRAM MANAGEMENT
LANDSCAPE ARCHITECTURE
SUSTAINABLE DESIGN
PERMITTING SERVICES
TRANSPORTATION SERVICES

THE INFORMATION, DESIGN AND CONTENT OF THIS PLAN ARE PROPRIETARY AND SHALL NOT BE COPIED OR USED FOR ANY PURPOSE WITHOUT PRIOR WRITTEN AUTHORIZATION FROM BOHLER. ONLY APPROVED, SIGNED AND SEALED PLANS SHALL BE UTILIZED FOR CONSTRUCTION PURPOSES
© 2025 BOHLER

REVISIONS

REV	DATE	COMMENT	DRAWN BY / CHECKED BY
1	7/14/2025	1ST ROUND OF COMMENTS	AH / KD
2	8/11/2025	2ND ROUND OF COMMENTS	AH / KD
3	08/14/2025	QAQC COMMENTS	AH / KD
4	10/23/2025	3RD ROUND OF COMMENTS	KD / KD

811 KNOW WHAT'S BELOW ALWAYS CALL 811 BEFORE YOU DIG
It's fast. It's free. It's the law.
www.callsunshine.com

ISSUED FOR MUNICIPAL & AGENCY REVIEW & APPROVAL

THIS DRAWING IS INTENDED FOR MUNICIPAL AND/OR AGENCY REVIEW AND APPROVAL. IT IS NOT INTENDED AS A CONSTRUCTION DOCUMENT UNLESS INDICATED OTHERWISE.

PROJECT No.:	FLA230191.00-0A
DRAWN BY:	~AH/MV~
CHECKED BY:	~KD/KM ~
DATE:	10/23/2025
CAD I.D.:	P-CIVL-LGHT

PROJECT:

SITE CONSTRUCTION PLANS

FOR

MAVIS TIRES & BRAKES - CITY OF WESTLAKE
16775 PERSIMMON BLVD
WESTLAKE, FL 33470
CITY OF WESTLAKE
S 01, T 43S, R 40E

BOHLER™
600 N. WESTSHORE BLVD. SUITE 950
TAMPA, FLORIDA 33609
Phone: (813) 812-4100
Fax: (813) 812-4101
FLORIDA BUSINESS CERT. OF AUTH. No. 30780

This item has been digitally signed and sealed by Kayla M. Dedrick PE on the date adjacent to the seal. Signature must be verified on any electronic copies.

SHEET TITLE:

LIGHTING PLAN

SHEET NUMBER:

L-201

REVISION 4 - 10/23/2025

Oct 23, 2025
H:\2023\FLA230191.00\ENGINEERING\CAD\DRAWINGS\PLAN SETS\CIVIL SITE PLAN\REV. 0\AP-CIVIL-LGHT-FLA230191.00-0A----~LAYOUT: L-201 LGHT
KD