Docusign Envelope ID: 9592B495-B7EC-4653-87F2-7B6B027BF5B1

Execution Version
Licensee Cell Site Name/#:
O'Connel WT/WI1058

AMENDED AND RESTATED WATER TOWER LICENSE AGREEMENT BETWEEN CITY OF WATERTOWN, WISCONSIN AND NEW CINGULAR WIRELESS PCS, LLC

This Amended and Restated Water Tower License Agreement ("**Agreement**") is effective as of October 22, 2023 ("**Effective Date**"), by and between the City of Watertown, Wisconsin ("**Watertown**"), acting in its capacity as a municipal utility and whose water department office is located at 800 Hoffmann Drive, Watertown, WI 53094, and New Cingular Wireless PCS, LLC, a Delaware limited liability company ("**Licensee**") with its principal offices at 1025 Lenox Park Blvd NE, 3rd Floor, Atlanta, GA 30319, as a successor in interest to Indus, Inc. Watertown and Licensee are at times collectively referred to as the "**Parties**" or individually as the "**Party**."

RECITALS

The following recitals form a substantive part of this Agreement:

A. Watertown owns a water tower ("**Tower**") and real estate located at 509 O'Connell Street, Watertown, WI 53094 ("**Property**"), as more particularly described on **Exhibit A** and depicted on the site survey attached as **Exhibit B**.

B. The Parties, and/or their predecessors in interest, entered into that certain Water Tower/Land Lease and Option Agreement dated July 24, 1998, as amended by an Estoppel and Consent Certificate and Lease Amendment dated June 9, 2000, a First Amendment to Water Tower/Land Lease and Option Agreement dated December 19, 2017, and a Second Amendment to Water Tower/Land Lease and Option Agreement dated October 13, 2020 ("**Lease**"), which is set to expire on October 21, 2023.

C. The Lease authorized Licensee to place certain communications equipment and related facilities on the Tower and on certain land space near the base of the Tower ("**Existing Facilities**").

D. The Parties desire to amend and restate the Lease as a license agreement to, among other things, extend the term, modify the legal description of the land space, and permit Licensee to maintain its Existing Facilities on the Property.

E. The Parties intend that this Agreement supersede and replace the Lease as of the Effective Date.

Docusign Envelope ID: 9592B495-B7EC-4653-87F2-7B6B027BF5B1

AGREEMENT

The Parties agree as follows:

ARTICLE 1: LICENSE GRANTED

1.1 As of October 22, 2023, the Lease is terminated and is replaced and superseded by this Agreement.

1.2 Licensee's Existing Facilities and any additional or replacement equipment or facilities approved pursuant to the terms of this Agreement are collectively referred to as the "**Communications Facilities.**"

1.3 Subject to the provisions of this Agreement, Watertown hereby grants to Licensee:

1.3.1 A revocable license authorizing Licensee to install, maintain, upgrade, and operate Licensee's Communications Facilities on two portions of the Property totaling approximately 814 square feet (collectively, the "**Land Space**"), as more particularly described on **Exhibit A** and depicted on the site survey attached as **Exhibit B**. The Land Space shall NOT include the overlap area depicted and described on **Exhibit C**.

1.3.2 A revocable license authorizing Licensee to install, maintain, upgrade, and operate Licensee's Communications Facilities on the specific locations on the Tower ("**Tower Space**") shown on the drawings of the Existing Facilities and equipment inventory attached as **Exhibit D**.

1.3.3 The following temporary, non-exclusive easements, which shall automatically terminate upon the termination or expiration of this Agreement: (i) an "**Access Easement**" across the Property for ingress and egress to the Land Space and (ii) a "**Utility Easement**" across the Property for the underground installation of utility wires, cables, conduits, cable trays, and pipes (collectively, the "**Easements**") in the locations on the Property more particularly described on **Exhibit A** and depicted on the site survey attached as **Exhibit B**.

1.4 The Tower Space and Land Space are collectively referred to as the "**Premises**."

ARTICLE 2: TERM

2.1 The "**Initial Term**" of this Agreement shall commence on November 1, 2023, ("**Commencement Date**") and shall terminate on the fifth anniversary of the Commencement Date.

2.2 Provided that Licensee is not in default under this Agreement at the end of the Initial Term or any Renewal Term, this Agreement shall automatically be extended for three additional five-year terms (each, a "**Renewal Term**") unless Licensee notifies Watertown in writing of its intention to terminate this Agreement at least 90 days prior to the expiration of the then-

Docusign Envelope ID: 9592B495-B7EC-4653-87F2-7B6B027BF5B1

current Term, in which case the Agreement shall terminate at the end of the Term during which such notice is given.

2.3 Either Party may terminate this Agreement at the end of the fourth and final Renewal Term by giving written notice to the other Party of its intention to terminate this Agreement at least 90 days prior to the expiration of the final Renewal Term. If neither Party has given such a notice to the other Party, then upon the expiration of the fourth and final Renewal Term, this Agreement shall continue in force upon the same covenants, terms, and conditions for an additional term of one year and for annual terms thereafter (each, an "**Annual Term**") until terminated by either Party by giving the other Party 60 days' written notice of its intention to terminate this Agreement at the end of the then-current Annual Term.

2.4 The Initial Term, each Renewal Term, and any Annual Terms are referred to collectively as the "**Term**."

ARTICLE 3: LICENSE FEE

3.1 Commencing on the Commencement Date, the annual "**License Fee**" shall be **$31,200.00** payable in equal monthly installments of **$2,600.00** in advance on or before the fifth day of each month. License Fees for any partial months shall be prorated. Each year, on the anniversary of the Commencement Date, the License Fee shall increase by three percent (**3.0%**) over the License Fee in effect the immediately preceding year.

3.2 The Parties agree that the License Fee paid to Watertown to date is good and valuable consideration as holdover License Fee for the holdover License Fee period from October 22, 2023 through October 31, 2023, the receipt and sufficiency of which are hereby acknowledged.

3.3 The Parties acknowledge that, pursuant to the Lease, Licensee has been paying to Watertown monthly rent of $2,413.44 and that, upon the full execution of this Agreement, Licensee shall owe Watertown the difference between the License Fee required under this Agreement and the rent paid under the Lease (i.e., $186.56 per month) for each month during the period beginning November 1, 2023 and ending on the date of full execution of this Agreement ("**True-Up Payment**"). Licensee shall make such True-Up Payment to Watertown within 40 days after the full execution of this Agreement.

3.4 Licensee shall pay the License Fee to Watertown at Attn: Water Utility Clerk, PO Box 477, Watertown, WI 53094 or to such other person, firm, or place as Watertown may, from time to time, designate in writing at least 30 days in advance of any License Fee payment due date by notice given in accordance with Article 17 below.

3.5 In the event Licensee fails to timely pay any sums due under this Agreement, Licensee shall pay to Watertown a late fee on the total payment due of three percent (**3.0%**) per month.

ARTICLE 4: DISCLAIMERS

4.1 Licensee acknowledges and agrees that Watertown has made no representations or warranties, express or implied, regarding the physical condition of the Property, Premises, or

Docusign Envelope ID: 9592B495-B7EC-4653-87F2-7B6B027BF5B1

Easements; the suitability of the Property, Premises, or Easements for Licensee's desired purposes; or the state of title of the Property.

4.2 Licensee acknowledges and agrees that Licensee is experienced in land acquisition and premises development, that it has conducted or will conduct all necessary and appropriate inspections of the Property, and that Licensee accepts the Property, including the Easements, Premises, and all structures thereon, in "***as-is, where-is, and with all faults***" condition.

4.3 ***Watertown makes no warranties or representations regarding Licensee's exclusive use of the Property, Tower, or Easements; non-interference with Licensee's transmission operations; or that the Premises, Easements, or utilities serving the Premises are fit for Licensee's intended use, and all such warranties and representations are hereby disclaimed.***

ARTICLE 5: TAXES/NO LIENS

5.1 Licensee shall have the responsibility to pay any personal property taxes, assessments, or charges owed on the Property that are the result of Licensee's use of the Premises and/or the installation, maintenance, and operation of Licensee's Communications Facilities. Licensee shall be responsible for the payment of all taxes, levies, assessments, and other charges imposed upon the business conducted by Licensee at the Property.

5.2 Licensee shall have the right, at its sole cost and expense, to appeal, challenge, or seek modification of any tax assessment or billing for which Licensee is wholly or partly responsible to pay.

5.3 Licensee shall not permit any claim or lien to be placed against any part of the Property or Tower that arises out of work, labor, material, or supplies provided or supplied to Licensee, its contractors or their subcontractors for the installation, construction, operation, maintenance, or removal of the Communications Facilities or use of the Premises or Property. Upon 30 days' prior written notice from Watertown, Licensee shall cause any such claim or lien filed by any third party making a claim against, through, by, because of, or under Licensee to be discharged by bonding or letter of credit to give Watertown security to protect Watertown's interests from the claim or lien. If Licensee elects to obtain a bond, it shall be with a company authorized to provide bonds in Wisconsin.

ARTICLE 6: USE

6.1 Permitted Use. Licensee shall continuously use the Premises solely for the purpose of constructing, maintaining, repairing, and operating its Communications Facilities. All Communications Facilities shall be installed and maintained at Licensee's expense and shall be and remain the exclusive property of Licensee. Licensee shall not do or permit to be done in, to, on, or about the Property any act or thing which would violate, suspend, invalidate, or make inoperative any insurance pertaining to the Property or the Premises or any improvements thereto.

Docusign Envelope ID: 9592B495-B7EC-4653-87F2-7B6B027BF5B1

6.2 Compliance with Laws.

6.2.1 Licensee, at its expense, shall diligently, faithfully, and promptly obey and comply with all federal, state, and local orders, rules, regulations, and laws (collectively, "**Laws**"), including all environmental laws and Federal Communications Commission ("**FCC**") and Federal Aviation Administration ("**FAA**") rules, that are applicable to operations conducted upon or above the Premises and including the applicable American National Standards Institute ("**ANSI**") "Safety Levels with respect to Human Exposure to Radio Frequency Electromagnetic Fields" as set forth in the current ANSI standard or any applicable FCC standard that supersedes this standard or any applicable Environmental Protection Agency rules or regulations that may hereinafter be adopted that supersede this standard. Licensee shall adhere to all Occupational Safety and Health Administration safety requirements that are applicable to Licensee's operations conducted upon or above the Property.

6.2.2 Licensee shall neither do nor permit any act or omission that could cause the Premises or the use thereof to fall out of compliance with applicable Laws. Licensee shall provide to Watertown a copy of any written notice received by Licensee from any governing authority regarding non-compliance with any Law pertaining to Licensee's operations conducted upon or above the Premises within 30 days of Licensee's receipt of any such notice of non-compliance. Any fines or penalties imposed for improper or illegal installation or operation of any improvements on the Premises or for any other violation of Laws on the Premises shall be Licensee's sole responsibility.

6.3 Governmental Approvals. Licensee shall not install Communications Facilities on the Premises without first obtaining all necessary federal, state, and local governmental approvals and permits for such installation.

6.4 Utility Service. Licensee shall pay and be responsible for all utility services it uses on the Premises and all other costs and expenses in connection with the use, operation, and maintenance of the Premises and all activities conducted thereon. All utilities serving the Premises shall be underground, located within a Utility Easement, and shall be separately metered. No backup generators shall be allowed to operate on the Premises unless they are powered by natural gas.

6.5 Advertisements. Licensee shall not advertise on the Property or on any structure on the Property, except for company identification as required by FCC regulation.

6.6 Damage During Installation. Any damage done to the Property, Tower, or surrounding land during installation, operation, maintenance, repair, or removal of the Communications Facilities that results from the action or inaction of Licensee or its contractors or their subcontractors or the presence of the Communications Facilities shall be immediately repaired at Licensee's expense and to Watertown's reasonable satisfaction. Licensee shall pay all costs and expenses in relation to maintaining the structural integrity of the Tower in connection with Licensee's installation and operation of the Communications Facilities.

Docusign Envelope ID: 9592B495-B7EC-4653-87F2-7B6B027BF5B1

6.7 Maintenance. Licensee shall be responsible for maintenance and security of the Land Space and Licensee's Communications Facilities and shall keep the same (including any fencing or landscaping shown on **Exhibit B**, **Exhibit D**, or the Construction Drawings approved pursuant to Article 8) in good repair and condition during the Term of this Agreement.

ARTICLE 7: ACCESS

7.1 Licensee shall have 24/7 unsupervised access to the Communications Facilities located on the Land Space portion of the Premises. Licensee may have supervised access to the Communications Facilities inside or on the Tower by requesting access 48 hours in advance. For instances involving regular maintenance, Licensee shall request access to the Tower by calling **(920) 262-4075** between the hours of 7:00 a.m. and 2:00 p.m. If Licensee needs access to the Tower in an emergency, it shall give advance notice to Watertown as soon as reasonably possible by calling **(920) 261-6660**. Licensee shall reimburse Watertown for all costs Watertown incurs in sending its personnel to the Property and in supervising Licensee's Tower access.

7.2 Licensee shall be subject to all emergency operation plans adopted by Licensee applicable to the Tower. When accessing the Tower, Licensee's employees, contractors, and agents shall have proper identification. Licensee shall be responsible for maintaining a written record of the names of its employees, contractors, and agents who perform work on the Premises, the nature of the work performed, and the date and time such work is performed. Licensee shall make such records available to Watertown upon request.

ARTICLE 8: UPGRADE PROJECTS, MODIFICATIONS, REPAIR, & REPLACEMENT

8.1 Future Modifications.

8.1.1 Licensee shall not seek to add any additional Communications Facilities or make any other additions, alterations, or improvements to the Premises or Property ("**Modification Project**") without Watertown's prior written approval. Approval of a Modification Project may be subject to an increase in the License Fee and/or the Parties' entering into either an amendment to this Agreement or a replacement Agreement.

8.1.2 Licensee shall submit all of the following to Watertown in connection with its request for approval of a Modification Project:

8.1.2.1 *Application.* A complete and executed Antenna Site Application ("**Application**") on the form attached as **Exhibit E**.

8.1.2.2 *Deposit.* The required deposit, as set forth in the Application.

8.1.2.3 *Construction Drawings.* Detailed construction plans and drawings ("**Construction Drawings**") for all proposed improvements that are part of the Modification Project for Watertown's written approval, which

Docusign Envelope ID: 9592B495-B7EC-4653-87F2-7B6B027BF5B1

approval must be obtained before Licensee may commence any construction or installation work on the Property.

8.1.2.4 *Engineering Study/Structural Analysis.* If the Modification Project will impact the Tower, an engineering study and structural analysis to determine whether the proposed installation of the Modification Project will adversely affect the structural integrity of the Tower.

8.1.2.5 *Updated Site Survey.* If requested by Watertown, an updated site survey that reflects any proposed changes to the Land Space and/or Easements in connection with the Modification Project for Watertown's written approval.

8.2 Additional Project Requirements.

8.2.1 Licensee's installation of a future Modification Project shall be made at Licensee's sole expense and completed in a neat and workmanlike manner in accordance with sound engineering practices; all applicable Laws; and in strict compliance with the approved Construction Drawings.

8.2.2 Within 30 days after installation of a Modification Project, Licensee shall provide to Watertown electronically formatted as-built drawings ("**As-Built Drawings**") documenting the Communications Facilities installed on the Property. The As-Built Drawings shall be reviewed and approved by the engineer of record, show the actual location of all of Licensee's Communications Facilities, and be accompanied by a complete and detailed inventory of all then-existing and newly installed Communications Facilities.

8.2.3 After installation of a Modification Project, Licensee shall address all punch-list items within 20 days after Licensee or its contractors receive the punch list from Watertown or Watertown's contractors. If Licensee fails to satisfactorily address all items on the punch list within the 20-day time period, Licensee shall pay to Watertown a fee of $100 for each day that Licensee has not completed its obligations under this Section 8.2.3.

8.3 Repair/Replacement Notice.

8.3.1 With the exception of emergencies, Licensee shall submit to Watertown advance written notice of the need for and the nature of any repair or maintenance of Licensee's existing Communications Facilities or the replacement of such facilities on a like-for-like basis, using the Antenna Site Service Notice form attached as **Exhibit F** ("**Service Notice**"). For the sake of clarity, "**like-for-like basis**" means that the existing Communications Facilities are replaced with Communications Facilities that are not greater in size (i.e., the dimensions are the same or smaller), weight, and number and that the new Communications Facilities are attached in the same manner as the then-existing Communications Facilities.

Docusign Envelope ID: 9592B495-B7EC-4653-87F2-7B6B027BF5B1

8.3.2 If Watertown objects to the Service Notice, Watertown shall notify Licensee in writing within two business days of its receipt of the Service Notice. Watertown's notice to Licensee shall specify in detail the objection and whether Licensee is authorized to proceed with the repair or replacement. Licensee may submit a revised Service Notice as often as necessary until approved by Watertown.

8.3.3 In the case of an emergency, Licensee shall provide written notice to Watertown describing the replacement or repair, as well as an explanation of the reason the repair or replacement constituted an emergency and did not require prior written notice to Watertown, with the written notice being transmitted by Licensee to Watertown within 24 hours following the emergency replacement or repair. As used in this Agreement, "**emergency**" shall be deemed to exist only in instances in which the emergency conditions constitute an immediate threat to the health or safety of the public or an immediate danger to the Tower, its operations, or the Licensee's Communications Facilities.

8.4 Review/Inspection. As directed by Watertown, Watertown's technical consultant shall review and periodically inspect Licensee's Modification Project beginning with the pre-construction conference and continuing through installation, construction, punch list review, and verification of the post-construction As-Built Drawings. Before Licensee may energize its system (i.e., start-up), all items on the punch list must be substantially completed, as reasonably determined by Watertown.

8.5 Responsibility for Professional Costs. Licensee shall reimburse Watertown for all third-party professional costs, including legal and engineering fees, that Watertown incurs in connection with a Modification Project ("**Professional Costs**"). If the Professional Costs exceed the amount of any deposit made pursuant to the Application, Watertown will invoice Licensee for the additional Professional Costs incurred, which invoice shall be due and payable within 30 days of its receipt. If, upon completion of the Modification Project (including completion of any remedial work and verification of the post-construction As-Built Drawings), the Professional Costs are less than the amount of any deposit made pursuant to the Application, Watertown shall refund the unused portion of the deposit to Licensee.

ARTICLE 9: TOWER PAINTING & MAINTENANCE

9.1 Relocation of Communications Facilities. Licensee shall remove its Communications Facilities from the Tower, at Licensee's sole cost and expense, to allow for Tower painting, reconditioning, or similar major maintenance or repair work that Watertown, in its sole discretion, determines will require the removal of the Communications Facilities from the Tower ("**Major Maintenance Work**").

9.1.1 Watertown shall notify Licensee prior to the end of any calendar year during which Watertown has planned and budgeted for the Major Maintenance Work in the following year. After the contract for such work has been awarded, Watertown shall further notify Licensee when a preliminary schedule for the work has been established.

Docusign Envelope ID: 9592B495-B7EC-4653-87F2-7B6B027BF5B1

9.1.2 Licensee and Watertown shall cooperate to ensure that the removal of the Communications Facilities does not interfere with the Major Maintenance Work. Licensee shall cooperate with Watertown with respect to the Major Maintenance Work and will make its representatives available to attend meetings with Watertown or its contractors (and any other Tower users) related to such work.

9.1.3 If Licensee requires the use of a temporary pole or cell on wheels (collectively, "**Temporary Tower**"), Watertown shall permit Licensee, at Licensee's sole expense, to place a Temporary Tower on the Property in a location mutually agreed upon by Watertown and Licensee. Licensee shall cooperate with Watertown regarding the placement of the Temporary Tower on the Property. If the Property will not accommodate Licensee's Temporary Tower, it is Licensee's responsibility to locate alternative sites. If space on the Property is limited, priority will be given to the Tower user who has been using the site the longest.

9.2 Communications Facilities Remain in Place. If Watertown, in its sole discretion, determines that it is reasonable to allow Licensee to keep all or any portion of the Communications Facilities in place during any maintenance or repair work, Licensee shall be responsible for all additional costs Watertown incurs due to the presence of the Communications Facilities on the tower during such work. Watertown will invoice Licensee for such additional costs, and Licensee shall pay such invoice within 30 days of its receipt. **Licensee agrees that it accepts any and all risk of damage to its Communications Facilities while the maintenance or repair work is being performed and that Watertown shall have no liability whatsoever for any such damage, regardless of the cause of such damage**.

9.3 Temporary Emergency Relocation. In case of an emergency that requires Watertown to remove Licensee's Communications Facilities, Watertown may do so after giving advance telephone notice to Licensee as soon as practical by calling **NOC 1-800-638-2822**. In the event the use of the Communications Facilities is interrupted, Licensee shall have the right to maintain a Temporary Tower on the Property in a location approved by Watertown. If the Property will not accommodate Licensee's Temporary Tower, it is Licensee's responsibility to locate alternative sites. If space on the Property is limited, priority will be given to the Tower user who has been using the site the longest.

ARTICLE 10: LIMITATION OF LIABILITY

10.1 Watertown reserves to itself the right to maintain, operate, and improve the Tower and Property in the manner that will best enable it to fulfill its water utility service requirements. Licensee agrees to use the Property and Tower at its sole risk. Notwithstanding the foregoing, Watertown shall exercise reasonable caution to avoid damaging Licensee's Communications Facilities and, if it is aware of or made aware of such damage, Watertown shall promptly report to Licensee the occurrence of any such damage caused by Watertown. Subject to Sections 9.2 and 10.2, Watertown agrees to reimburse Licensee for all reasonable costs Licensee incurs for the physical repair of its Communications Facilities damaged solely by Watertown's negligence or willful misconduct, not to exceed the limits of liability for municipal claims established by Wisconsin law.

Docusign Envelope ID: 9592B495-B7EC-4653-87F2-7B6B027BF5B1

10.2 No provision of this Agreement is intended, nor shall it be construed, to be a waiver for any purpose of any provision of Wis. Stat. §§ 893.80, 345.05, or any other notice requirements, governmental immunities, or damages limitations that may apply to Watertown, its employees, officials, or agents.

ARTICLE 11: INDEMNIFICATION

11.1 Indemnification. Licensee shall defend, indemnify, and hold harmless Watertown and its officers, officials, employees, and agents ("**Indemnified Parties**") against any and all liability, costs, damages, fines, taxes, special charges by others, penalties, payments (including payments made by Watertown under any workers' compensation laws or under any plan for employee disability and death benefits), remediation costs, and expenses (including reasonable attorney's fees and all other costs and expenses of litigation) (each a "**Covered Claim**") that may be asserted by any person or entity and arise in any way (including any act, omission, failure, negligence, or willful misconduct) in connection with this Agreement or with the construction, maintenance, repair, presence, removal, or operation of the Communications Facilities by Licensee or anyone under the direction or control or acting on behalf of or at the invitation of Licensee (including subcontractors) except to the extent Watertown's willful misconduct solely gives rise to such Covered Claim.

11.2 Procedure for Indemnification. The following procedures shall apply to Licensee's indemnification obligations under both Articles 11 and 12:

11.2.1 Watertown shall give prompt written notice to Licensee of any claim or threatened claim, specifying the factual basis for such claim and the amount of the claim. If the claim relates to an action, suit, or proceeding filed by a third party against Watertown, Watertown shall notify Licensee no later than 15 days after Watertown receives written notice of the action, suit, or proceeding.

11.2.2 Watertown's failure to give the required notice shall not relieve Licensee of its obligation to indemnify Watertown unless, and only to the extent, that Licensee is materially prejudiced by such failure.

11.2.3 Licensee shall have the right at any time, by notice to Watertown, to participate in or assume control of the defense of the claim with counsel of its choice, which counsel must be reasonably acceptable to Watertown. Watertown agrees to cooperate fully with Licensee. If Licensee assumes control of the defense of any third-party claim, Watertown shall have the right to participate in the defense at its own expense. If Licensee does not assume control or otherwise participate in the defense of any third-party claim, Licensee shall be bound by the results obtained by Watertown with respect to the claim.

11.2.4 If Licensee assumes the defense of a third-party claim as described above, then in no event shall Watertown admit any liability with respect to, or settle, compromise, or discharge any third-party claim without Licensee's prior written consent.

11.2.5 Licensee shall take prompt action to defend and indemnify the Indemnified Parties against Covered Claims, actual or threatened, but in no event later than notice by

Docusign Envelope ID: 9592B495-B7EC-4653-87F2-7B6B027BF5B1

Watertown to Licensee of the service of a notice, summons, complaint, petition, or other service of a process against an Indemnified Party alleging damage, injury, liability, or expenses attributed in any way to the Agreement; the work to be performed under this Agreement; or the acts, fault, negligence, equipment, materials, properties, facilities, personnel, or property of Licensee or anyone under its direction or control. Licensee shall defend any such claim or threatened claim, including as applicable, engagement of legal counsel, to respond to, defend, settle, or compromise any claim or threatened claim.

11.3 Costs. Licensee acknowledges and agrees that Licensee is responsible for reimbursing the Indemnified Parties for any and all costs and expenses (including reasonable attorneys' fees) actually incurred in the enforcement of Articles 11 and 12.

ARTICLE 12: ENVIRONMENTAL

12.1 Licensee represents and warrants that its use of the Property will not generate any Hazardous Substances (defined below), that it will not store or dispose of on the Property or transport to or over the Property any Hazardous Substances, and that its Communications Facilities do not constitute or contain and will not generate any Hazardous Substances in violation of any Laws now or hereafter in effect, including any amendments. "**Hazardous Substance**" shall be interpreted broadly to mean any substance, material, chemical, or waste that now or hereafter is classified or considered to be hazardous or toxic waste, hazardous or toxic material, hazardous or toxic radioactive substance, or other similar term by any federal, state, or local laws, regulations, or rules now or hereafter in effect, including any amendments.

12.2 Licensee shall indemnify, defend, and hold harmless the Indemnified Parties from and against any and all claims that may be asserted against or incurred by an Indemnified Party or for which an Indemnified Party may be held liable, which arise from the presence, use, generation, storage, treatment, disposal, or transportation of Hazardous Substances on, into, from, under, or about the Premises or Property by Licensee or anyone under the direction or control of or acting on behalf of or at the invitation of Licensee, specifically including, but not limited to, the cost of any required or necessary repair, restoration, remediation, cleanup, removal, or detoxification of the Premises or the Property and the preparation of any closure or other required plans, whether or not such action is required or necessary during the Term or after the expiration or termination of this Agreement, except only to the extent that Watertown's willful misconduct gives rise to such claim.

ARTICLE 13: INSURANCE

13.1 Coverage. At all times during the Term of this Agreement and for as long as the any Communications Facilities remain on the Property, Licensee will carry, at its own cost and expense, the following insurance:

13.1.1 *Workers' Compensation and Employers' Liability Insurance.* Statutory workers' compensation benefits and employers' liability insurance policy with a limit of $1,000,000 each accident/disease. This policy shall include a waiver of subrogation in favor of Watertown.

Docusign Envelope ID: 9592B495-B7EC-4653-87F2-7B6B027BF5B1

13.1.2 *Commercial General Liability Insurance.* Commercial general liability policy per ISO form CG 00 01 or its equivalent with a limit of $3,000,000 per occurrence for bodily injury and property damage and $6,000,000 general aggregate including premises, operations, products and completed operations, advertising injury, contractual liability coverage, and coverage for property damage from perils of explosion, collapse, or damage to underground utilities (commonly known as XCU coverage).

13.1.3 *Commercial Automobile Liability Insurance*. Commercial automobile liability policy in the amount of $1,000,000 combined single limit each accident for bodily injury or property damage covering all owned, hired, and non-owned autos and vehicles.

13.1.4 *Excess/Umbrella Liability.* Excess/umbrella liability policy with a limit of $6,000,000 per occurrence and aggregate providing coverage to be in excess of employers' liability, commercial general liability, and automobile liability insurance required above. Licensee may use any combination of primary and excess insurance to meet the total limits required.

13.1.5 *Property Insurance*. Property insurance on Licensee's facilities, buildings, and other improvements, including equipment, fixtures, fencing, or support systems that may be placed on, within, or around the Property to fully protect against hazards of fire, vandalism, and malicious mischief, and such other perils as are covered by policies of insurance commonly referred to and known as "extended coverage" insurance. This policy shall include a waiver of subrogation in favor of Watertown. Licensee self-insures its property insurance and in satisfaction of the waiver of subrogation requirement will include Watertown as joint loss payee to the extent of Watertown's insurable interest which would have been covered had Licensee purchased property insurance.

13.2 Additional Requirements. With respect to the policies of insurance Licensee is required to carry pursuant to Section 13.1:

13.2.1 Such insurance shall be primary coverage without reduction or right of offset or contribution on account of any insurance provided by Watertown to itself or its officials, officials, employees, or agents.

13.2.2 Watertown and its board members, departments, commissioners, officers, officials, agents, and employees ("**City Parties**") shall be included as an additional insured under all of the policies except for workers' compensation and employers' liability and Licensee's self-insured property coverage, which additional insured status shall be indicated on the certificate of insurance or in a blanket additional insured endorsement as it respects to this Agreement.

13.2.3 No policies of insurance required under this Article 13 shall contain provisions that exclude coverage of liability arising from excavating, collapse, or underground work or coverage for injuries to Watertown's employees or agents.

Docusign Envelope ID: 9592B495-B7EC-4653-87F2-7B6B027BF5B1

13.2.4 All policies (other than workers' compensation) shall be written on an occurrence and not a claims-made basis.

13.2.5 The insurer must be eligible to do business in the State of Wisconsin and have an A- or better rating in Best's Guide.

13.2.6 Upon execution of this Agreement and upon expiration or renewal of any liability policies required by this Agreement, Licensee shall submit to Watertown certificates of insurance evidencing the coverage required by this Agreement.

13.2.7 Licensee shall be fully responsible for any deductible amounts or for any deficiencies in the amounts of insurance maintained. Licensee shall defend, indemnify, and hold Watertown harmless from and against the payment of any deductible or any premium for Licensee's insurance policies.

13.2.8 The insurance requirements in this Article 13 shall not in any way act to reduce coverage that is broader or that includes higher limits.

13.3 Contractors' Insurance. Licensee shall ensure that all contractors and their subcontractors performing any work on the Property related to this Agreement obtain and maintain substantially the same coverage with substantially the same limits as are required of Licensee. Prior to any such contractor or subcontractor performing any work on the Property, Licensee shall furnish Watertown with a certificate of insurance evidencing the required coverage.

13.4 Waiver of Claims and Subrogation. Licensee hereby waives any and all rights of recovery, claim, action, or cause of action against Watertown for any loss or damage that may occur to the Communications Facilities, the Premises, or any improvements thereto, or any property located on the Premises, arising from any cause that (i) would be insured against under the terms of the property insurance Licensee is required to carry under this Article 13 or (b) is insured against under the terms of any property insurance actually carried by Tenant, regardless of whether the same is required hereunder, except for Licensee's self-insured property coverage where Licensee shall include Watertown as joint loss payee in lieu of waiver of subrogation and such status as joint loss payee shall void the requirement for waiver of subrogation for Licensee's self-insured property coverage. The foregoing waiver shall apply regardless of the cause or origin of such claim, including the negligence of Watertown or its agents, officers, employees, or contractors. The foregoing waiver shall not apply if it would have the effect, but only to the extent of such effect, of invalidating any insurance coverage of Licensee or Watertown.

13.5 Accident or Incident Reports. Licensee shall promptly furnish Watertown with copies of any accident or incident report(s) sent to Licensee's (or its contractor's or subcontractor's) insurance carriers concerning accidents or incidents on the Property or in connection with or as a result of performance of work under this Agreement.

13.6 No Limitation. Nothing contained in this Article 13 shall be construed as limiting the extent of Licensee's responsibility for payment of damages resulting from Licensee's activities

Docusign Envelope ID: 9592B495-B7EC-4653-87F2-7B6B027BF5B1

under this Agreement or limiting, diminishing, or waiving Licensee's indemnification obligations under this Agreement.

ARTICLE 14: INTERFERENCE

14.1 Watertown reserves to itself the right to maintain, operate, and improve the Tower and Property in the manner that will best enable it to fulfill its water utility service requirements. Licensee agrees to use the Property and the Tower at its sole risk. Licensee's installation, operation, maintenance, and use of the Communications Facilities shall not damage or adversely interfere in any way with Watertown's communications equipment or its water utility operations, including the Tower and its related repair and maintenance activities.

14.2 Licensee agrees to install only equipment of the type and frequency that will not cause harmful interference measurable in accordance with then-existing industry standards to any equipment of Watertown (whenever installed) or the equipment of preexisting radio frequency users on the Property ("**Pre-Existing User**"), as long as those Pre-Existing Users operate and continue to operate within their respective frequencies and in accordance with all applicable Laws.

14.3 In the event any equipment installed by Licensee causes interference to Watertown's or a Pre-Existing User's equipment on the Property, and after Watertown has notified Licensee in writing of such interference, Licensee will immediately take all commercially reasonable steps necessary to correct and eliminate the interference, including, but not limited to, powering down such equipment and later powering up such equipment for intermittent testing.

14.4 Watertown agrees that each of its future agreements with other tenants, lessees, or licensees who currently or in the future have use of the Tower or the Property ("**Other Users**") shall contain a provision substantially the same as Section 14.2 above and that Watertown shall enforce such provisions in a nondiscriminatory manner with respect to all of the Other Users. Watertown further agrees that Watertown and its employees, contractors, and agents shall use reasonable efforts, consistent with Section 14.1 above, not to cause interference with the operation of the Communications Facilities.

14.5 The Parties acknowledge that there will not be an adequate remedy at law for noncompliance with the provisions of this Article 14 and, therefore, either Party shall have the right to equitable remedies, such as, without limitation, injunctive relief and specific performance.

14.6 In addition to all other remedies available to Licensee, in the event the equipment or activities of then-existing Other Users or Watertown are causing interference to the Communications Facilities and such interference is not eliminated within seven calendar days after written notice to Watertown from Licensee, then Licensee shall have the right to terminate this Agreement.

14.7 For the purposes of this Agreement, "**interference**" may include, but is not limited to, any use of the Property that cause electronic interference with or physical obstruction to, or degradation of, the communications signals from the facilities of any permitted users of the Property.

Docusign Envelope ID: 9592B495-B7EC-4653-87F2-7B6B027BF5B1

ARTICLE 15: REMOVAL/BOND

15.1 Removal and Restoration. Upon termination or expiration of this Agreement, Licensee shall have 90 days to remove the Communications Facilities from the Premises (except underground utilities, which Licensee shall disconnect, and foundations, which shall be removed to a depth of four feet below grade) and shall restore the Tower and the Property to the condition they were in before Licensee's Communications Facilities were installed, ordinary wear and tear and loss by casualty or other causes beyond Licensee's control excepted, all at Licensee's sole cost and expense. Before removing any part of the Communications Facilities from the Tower upon termination or expiration of this Agreement, Licensee agrees on behalf of itself and its successors and assigns to provide Watertown with reasonable advance notice of its intentions to remove such facilities and agrees to coordinate such removal with Watertown.

15.2 Bond. On or before the Effective Date, Licensee shall provide to Watertown a bond with an entity and in a form satisfactory to the City Attorney for Watertown. The amount of the bond shall be $55,000, and it shall be kept in full force so long as the Communications Facilities are on the Premises. The purpose of the bond is to ensure the removal of the Communications Facilities and the restoration of the Property at the termination or expiration of this Agreement.

15.3 Removal and Restoration by Watertown. In the event that Licensee fails to comply with the removal and restoration requirements of this Agreement, Watertown shall have the right, using its own personnel or a contractor, to perform such removal and restoration, and Licensee shall reimburse Watertown for Watertown's actual costs of such removal and restoration within 60 days of receiving an invoice therefor. If Licensee fails to reimburse Watertown within such 60-day period, then Watertown may go against the bond referenced in Section 15.2 above.

15.4 Holdover. In the event Watertown does not exercise its right of removal under Section 15.3 above and Licensee fails to completely remove the Communications Facilities from the Premises or fails to restore the Tower and Property as required, Licensee shall continue to pay to Watertown an amount equal to 150% of the License Fee in effect during the last month of the Term, prorated for each and every day of every month during which any part of the Communications Facilities remains on the Property or the restoration of the Tower and the Property remains unfinished. Whether or not any or all of the Communications Facilities are in use or functioning shall not be considered a factor when determining Licensee's payment obligations under this Section 15.4.

ARTICLE 16: ASSIGNMENT & SUBLICENSING

16.1 Licensee may not sublicense any part of the Premises.

16.2 Licensee may assign its interest in this Agreement to an Affiliate without Watertown's consent. All other assignments or transfers shall require Watertown's prior written consent. No assignment or transfer shall be valid until (i) Licensee gives Watertown written notice of the assignment or transfer (which notice shall contain the legal name and contact information

Docusign Envelope ID: 9592B495-B7EC-4653-87F2-7B6B027BF5B1

for the assignee or transferee) and (ii) the assignee or transferee has agreed in writing to assume all of Licensee's obligations under this Agreement and a copy of such agreement has been provided to Watertown. Any assignment or transfer in violation of this Section 16.2 shall constitute a material default under this Agreement. For the purposes of this Article 16, an "**Affiliate**" is an entity controlled by, controlling, or under common control with Licensee ("**control**" being defined as the ownership, directly or indirectly, of at least 51% of the voting interest in an entity).

16.3 Notwithstanding any assignment by Licensee, Licensee will continue to be liable for all obligations of Licensee under this Agreement until released in writing by Watertown, unless the assignment is to an Affiliate. The consent by Watertown to any assignment will not relieve Licensee or any successor of Licensee from the obligation to obtain Watertown's written consent to any other assignment.

ARTICLE 17: NOTICES

17.1 All notices and demands hereunder must be in writing and shall be deemed validly given if sent by certified mail, return receipt requested, or sent overnight by nationally recognized commercial courier, addressed as follows:

If to Watertown:
City of Watertown
Attn: City Clerk
106 Jones Street
P.O. Box 477
Watertown, WI 53094

With a copy to:
Watertown Water Department
Attn: General Manager
800 Hoffmann Drive
P.O. Box 477
Watertown, WI 53094

If to Licensee:
New Cingular Wireless PCS, LLC
Attn: TAG – LA
Re: Cell Site #: WI1058
Cell Site Name: O'Connel WT (WI)
Fixed Asset #: 10080074
1025 Lenox Park Blvd. NE
3rd Floor
Atlanta, GA 30319

With a copy to:
New Cingular Wireless PCS, LLC
Attn: Legal Department
Re: Cell Site #: WI1058
Cell Site Name: O'Connel WT (WI)
Fixed Asset #: 10080074
208 S. Akard Street

Docusign Envelope ID: 9592B495-B7EC-4653-87F2-7B6B027BF5B1

Dallas, Texas, 75202-4206

Either Party may change its notice address for purposes of this Agreement by giving to the other Party written notice of the address change using one of the methods set out in this Section 17.1.

17.2 Notice shall be effective upon actual receipt or refusal of delivery, as evidenced on the receipt obtained from the carrier.

ARTICLE 18: DEFAULT & REMEDIES

18.1 Default by Licensee. The following will be deemed a default by Licensee and a breach of this Agreement:

18.1.1 Licensee's failure to pay the License Fee or any other sums owed to Watertown if such amount remains unpaid for more than 15 days after receipt of written notice from Watertown of such failure to pay or

18.1.2 Licensee's failure to perform any other term or condition under this Agreement within 30 days after receipt of written notice from Watertown specifying the failure.

18.2 No failure by Licensee under Section 18.1.2, however, will be deemed to exist if Licensee has commenced to cure such default within such 30-day period and provided that such efforts are prosecuted to completion with reasonable diligence. Delay in curing a default will be excused if due to causes beyond Licensee's reasonable control.

18.3 In the event of any uncured default by Licensee, in addition to all other rights and remedies available to Watertown at law, in equity, or under this Agreement, Watertown shall have the right to serve a written notice upon Licensee that Watertown elects to terminate this Agreement upon a specified date not less than 10 days but no more than 30 days after the date of serving such notice, and this Agreement shall terminate on the date so specified as if that date had been originally fixed as the termination date of the Term granted. In the event this Agreement is so terminated, Licensee shall promptly pay to Watertown a sum of money equal to the total of any unpaid amounts due under the Agreement, including the License Fee accrued through the date of termination.

18.4 Default by Watertown. The following will be deemed a default by Watertown and a breach of this Agreement:

18.4.1 Watertown's failure to provide access to the Premises within 48 hours of a request for access under Article 7.

18.4.2 Watertown's failure to perform any other term or condition under this Agreement within 30 days after receipt of written notice from Licensee specifying the failure.

18.5 No failure of Watertown under Section 18.4.2, however, will be deemed to exist if Watertown has commenced to cure the default within such 30-day period and provided such

Docusign Envelope ID: 9592B495-B7EC-4653-87F2-7B6B027BF5B1

efforts are prosecuted to completion with reasonable diligence. Delay in curing a default will be excused if due to causes beyond Watertown's reasonable control.

18.6 In the event of an uncured default by Watertown under Section 18.4.2, Licensee will have all rights and remedies available to it at law, in equity, or under this Agreement. However, Licensee's sole remedy for Watertown's failure to timely provide access under Section 18.4.1 shall be the right to seek specific performance.

ARTICLE 19: CASUALTY & DECOMMISSIONING

19.1 If the Tower is damaged for any reason, other than by reason of the willful misconduct or negligence of Licensee, its employees, contractors, or agents, so as to render it substantially unusable for Licensee's intended use, in Licensee's reasonable discretion, the License Fee shall abate until Watertown, at Watertown's expense and option, restores the Tower to its condition prior to such damage. If Watertown elects not to restore the Tower, it shall give Licensee written notice of such election and this Agreement shall immediately terminate.

19.2 If Licensee is unable to install a Temporary Tower or its functional equivalent in a mutually agreed-upon location for Licensee's use during the Tower repairs or Watertown does not begin repairs within 60 days following the date the Tower was damaged, Licensee shall have the right to terminate this Agreement by giving Watertown written notice thereof, as long as Licensee has not resumed operations upon the Property.

19.3 Watertown, in its absolute discretion, may decommission and dismantle the Tower at any time. Watertown shall give Licensee no less than 180 days' prior written notice of the date by which Licensee's Communications Facilities must be removed from the Property in accordance with Article 15. This Agreement will terminate at the end of the 180-day notice period (or at a different time, if both Parties agree to such termination date in writing).

ARTICLE 20: ADDITIONAL PROVISIONS

20.1 Municipal Authority. Nothing contained in this Agreement shall be construed to waive any obligation or requirement of Licensee to obtain all necessary approvals, licenses, and permits (if any) from the City of Watertown in accordance with its ordinances and usual practices and procedures, nor limit or affect in any way the right or authority of the City of Watertown to approve or reasonably disapprove any plans or specifications or to impose reasonable limitations, restrictions, and requirements as a condition of any such approval, license, or permit.

20.2 Condemnation. If a condemning authority takes all of the Premises, or a portion sufficient, in Licensee's reasonable determination, to render the Premises unsuitable for the use which Licensee was then making of the Premises, this Agreement shall terminate on the date title vests in the condemning authority.

20.3 Work Performed by Watertown. Any work performed or service provided by Watertown, the cost of which is Licensee's responsibility under this Agreement, shall be charged out at Watertown's annually adopted fully loaded labor rate ("**Labor Rate**") and transportation rate ("**Transportation Rate**"), which rates shall include a charge for administrative and general

Docusign Envelope ID: 9592B495-B7EC-4653-87F2-7B6B027BF5B1

costs. Watertown will invoice Licensee for such costs, which invoice shall be due and payable within 30 days of its receipt. Upon Licensee's request, Watertown will provide Licensee with documentation of Watertown's Labor Rate and Transportation Rate for the then-current year.

20.4 Recording; Further Assurances. Contemporaneous with the execution of this Agreement, Watertown and Licensee agree to execute a memorandum of this Agreement substantially in the form attached as **Exhibit G,** which Licensee shall record with the appropriate recording officer, at Licensee's sole expense, within 30 days of the Effective Date. Licensee shall promptly provide a copy of the recorded document to Watertown. Watertown and Licensee agree, as part of the basis of their bargain for this Agreement, to cooperate fully in executing any and all documents necessary to correct any factual or legal errors, omissions, or mistakes, and to take any and all additional action that may be necessary or appropriate to give full force and effect to the terms and intent of this Agreement.

20.5 Binding Upon Execution. The Parties agree that this Agreement is not binding on either Party until fully executed.

20.6 Subordination. Licensee agrees that this Agreement will be subject and subordinate to any mortgage or deed of trust now or hereafter placed upon the Property and to all modifications, renewals, replacements, or extensions thereto, and to all present and future advances made with respect to such mortgages or deeds of trust. In addition, Licensee agrees to attorn to the mortgagee, trustee, or beneficiary, or purchaser under any such mortgage or deed of trust. This subordination shall be self-operative, and no further instrument shall be required in order for it to become effective; however, Licensee will promptly execute and deliver to Watertown any certificate that Watertown may reasonably request to confirm this subordination.

20.7 Survival. The provisions of the Agreement relating to indemnification and removal of Licensee's Communications Facilities shall survive the termination or expiration of this Agreement. Additionally, any provisions of this Agreement that require performance subsequent to the termination or expiration of this Agreement shall also survive such termination or expiration.

20.8 Governing Law. This Agreement and the performance thereof shall be governed, interpreted, construed, and regulated by the laws of the State of Wisconsin, without regard to its conflict of law provisions.

20.9 Interpretation. This Agreement is the result of negotiation by the Parties and each Party had the opportunity to consult legal counsel with respect to this Agreement prior to execution. Nothing in this Agreement or any amendment or exhibit to it shall be construed more strictly for or against either Party because that Party or its attorney drafted this Agreement or any portion of it.

20.10 Entire Agreement. This Agreement, including its recitals and exhibits, contains all agreements, promises, and understandings between Watertown and Licensee with respect to the subject matter of this Agreement, and no verbal or oral agreements, promises, or

Docusign Envelope ID: 9592B495-B7EC-4653-87F2-7B6B027BF5B1

understandings shall be binding upon either Watertown or Licensee in any dispute, controversy, or proceeding at law.

20.11 Amendment. Any amendment or modification of this Agreement shall be void and ineffective unless made in writing and signed by both Parties.

20.12 Severability. If any section, subsection, term, or provision of this Agreement or the application thereof to any party or circumstance is, to any extent, held invalid or unenforceable, the remainder of the section, subsection, term, or provision of the Agreement or the application of the same to parties or circumstances other than those to which it was held invalid or unenforceable, will not be affected thereby and each remaining section, subsection, term, or provision of this Agreement will be valid and enforceable to the fullest extent permitted by law.

20.13 Headings. The headings of articles, sections, and subsections are for convenient reference only and will not be deemed to limit, construe, affect, modify, or alter the meanings of the articles, sections, or subsections.

20.14 Time of the Essence. Time is of the essence with respect to all of Licensee's obligations under this Agreement.

20.15 No Waiver. The failure of either Party to insist upon strict performance of any of the terms or conditions of this Agreement or to exercise any of its rights under the Agreement shall not waive such rights, and such Party shall have the right to enforce such rights at any time and take such action as may be lawful and authorized under this Agreement, in law or in equity.

20.16 Successors. The provisions, covenants, and conditions of this Agreement shall bind and inure to the benefit of the legal representatives, successors, and assigns of each of the Parties, except that no assignment by Licensee shall vest any right in the assignee unless all of the requirements set forth in Section 16.2 have been satisfied.

20.17 Counterparts. This Agreement may be executed in several counterparts, each of which when so executed and delivered shall be deemed an original and all of which, when taken together, shall constitute one and the same instrument, even though all Parties are not signatories to the original or same counterpart. Furthermore, the Parties may execute and deliver this Agreement by electronic means, such as .pdf, DocuSign, or similar format. The Parties agree that delivery of this Agreement by electronic means will have the same force and effect as delivery of original signatures and that the Parties may use such electronic signatures as evidence of the execution and delivery of the Agreement to the same extent as an original signature.

The Parties have formed this Agreement as of the Effective Date.

[SIGNATURE PAGES FOLLOW]

Docusign Envelope ID: 9592B495-B7EC-4653-87F2-7B6B027BF5B1

CITY OF WATERTOWN, WISCONSIN,
Acting in its capacity as a municipal utility

By: _____

Name: Emily McFarland

Title: Mayor

Date: _____

Attest:

By: _____

Name: Megan Dunneisen

Title: City Clerk

Date: _____

[ADDITIONAL SIGNATURE PAGE FOLLOWS]

Docusign Envelope ID: 9592B495-B7EC-4653-87F2-7B6B027BF5B1

LICENSEE:
NEW CINGULAR WIRELESS PCS, LLC,
a Delaware limited liability company

By: AT&T Mobility Corporation
Its: Manager

By: DocuSigned by: Erik Nelson E108B42428FC4DB...

Print Name: Erik Nelson

Title: Lead

Date: 7/23/2024

Docusign Envelope ID: 9592B495-B7EC-4653-87F2-7B6B027BF5B1

EXHIBIT A

LEGAL DESCRIPTIONS OF PROPERTY, LAND SPACE, AND EASEMENTS

Property

THE EAST 72 FEET OF LOT 1, THE WEST 10 FEET OF LOT 8, THE EAST 72 FEET OF THE NORTH 25 FEET OF LOT 2, AND THE WEST 10 FEET OF THE NORTH 25 FEET OF LOT 7, ALL IN BLOCK 17 OF THE ORIGINAL PLAT-WEST SIDE OF ROCK RIVER OF THE CITY OF WATERTOWN, JEFFERSON COUNTY, WISCONSIN.

Land Space

A PARCEL OF LAND BEING THAT PART OF THE EAST 72 FEET OF LOT 1 AND THE EAST 72 FEET OF THE NORTH 25 FEET OF LOT 2, ALL IN BLOCK 17 OF THE ORIGINAL PLAT-WEST SIDE OF ROCK RIVER OF THE CITY OF WATERTOWN, JEFFERSON COUNTY, WISCONSIN, FURTHER DESCRIBED AS FOLLOWS: COMMENCING AT THE NORTHWEST CORNER OF SECTION 4, IN TOWNSHIP 8 NORTH, RANGE 15 EAST, IN THE CITY OF WATERTOWN, JEFFERSON COUNTY, WISCONSIN; THENCE SOUTH 02 DEGREES 17 MINUTES 07 SECONDS EAST ALONG THE WEST LINE OF SAID SECTION, 561.85 FEET; THENCE SOUTH 86 DEGREES 17 MINUTES 01 SECONDS EAST, 851.58 FEET TO THE WEST LINE OF THE EAST 72 FEET OF LOT 1; THENCE SOUTH 03 DEGREES 42 MINUTES 51 SECONDS WEST ALONG SAID WEST LINE, 37.02 FEET; THENCE SOUTH 86 DEGREES 17 MINUTES 09 SECONDS EAST PERPENDICULAR TO THE LAST DESCRIBED COURSE, 15.07 FEET TO THE POINT OF BEGINNING; THENCE CONTINUING SOUTH 86 DEGREES 17 MINUTES 01 SECONDS EAST, 20.00 FEET; THENCE SOUTH 03 DEGREES 42 MINUTES 59 SECONDS WEST, 13.11 FEET; THENCE NORTH 87 DEGREES 01 MINUTES 25 SECONDS WEST, 1.72 FEET; THENCE SOUTH 02 DEGREES 58 MINUTES 35 SECONDS WEST, 13.38 FEET; NORTH 86 DEGREES 17 MINUTES 01 SECONDS WEST, 7.00 FEET; THENCE SOUTH 48 DEGREES 42 MINUTES 59 SECONDS WEST, 5.45 FEET; THENCE NORTH 41 DEGREES 17 MINUTES 01 SECONDS WEST, 16.74 FEET; THENCE NORTH 48 DEGREES 42 MINUTES 59 SECONDS EAST, 5.99 FEET; THENCE NORTH 03 DEGREES 42 MINUTES 59 SECONDS EAST, 14.30 FEET TO THE POINT OF BEGINNING. SAID PARCEL CONTAINS 534 SQUARE FEET, MORE OR LESS.
AND
A PARCEL OF LAND BEING THAT PART OF THE EAST 72 FEET OF LOT 1 IN BLOCK 17 OF THE ORIGINAL PLAT-WEST SIDE OF ROCK RIVER OF THE CITY OF WATERTOWN, JEFFERSON COUNTY, WISCONSIN, FURTHER DESCRIBED AS FOLLOWS: COMMENCING AT THE NORTHWEST CORNER OF SECTION 4, IN TOWNSHIP 8 NORTH, RANGE 15 EAST, IN THE CITY OF WATERTOWN, JEFFERSON COUNTY, WISCONSIN; THENCE SOUTH 02 DEGREES 17 MINUTES 07 SECONDS EAST ALONG THE WEST LINE OF SAID SECTION, 561.85 FEET; THENCE SOUTH 86 DEGREES 17 MINUTES 01 SECONDS EAST, 851.58 FEET TO THE WEST LINE OF THE EAST 72 FEET OF LOT 1; THENCE SOUTH 03 DEGREES 42 MINUTES 51 SECONDS WEST ALONG SAID WEST LINE, 13.27 FEET; THENCE SOUTH 86 DEGREES 17 MINUTES 09 SECONDS EAST PERPENDICULAR TO THE LAST DESCRIBED COURSE, 8.00 FEET TO THE POINT OF BEGINNING; THENCE CONTINUING SOUTH 86

Docusign Envelope ID: 9592B495-B7EC-4653-87F2-7B6B027BF5B1

DEGREES 17 MINUTES 09 SECONDS EAST, 14.00 FEET; THENCE SOUTH 03 DEGREES 42 MINUTES 51 SECONDS WEST, 20.00 FEET; THENCE NORTH 86 DEGREES 17 MINUTES 09 SECONDS WEST, 14.00 FEET; THENCE NORTH 03 DEGREES 42 MINUTES 51 SECONDS EAST, 20.00 FEET TO THE POINT OF BEGINNING. SAID PARCEL CONTAINS 280 SQUARE FEET, MORE OR LESS.

Access Easement

A PARCEL OF LAND FOR ACCESS EASEMENT PURPOSES BEING THAT PART OF THE EAST 72 FEET OF LOT 1 AND THE WEST 10 FEET OF THE NORTH 25 FEET OF LOT 7, ALL IN BLOCK 17 OF THE ORIGINAL PLAT-WEST SIDE OF ROCK RIVER OF THE CITY OF WATERTOWN, JEFFERSON COUNTY, WISCONSIN, FURTHER DESCRIBED AS FOLLOWS: COMMENCING AT THE NORTHWEST CORNER OF SECTION 4, IN TOWNSHIP 8 NORTH, RANGE 15 EAST, IN THE CITY OF WATERTOWN, JEFFERSON COUNTY, WISCONSIN; THENCE SOUTH 02 DEGREES 17 MINUTES 07 SECONDS EAST ALONG THE WEST LINE OF SAID SECTION, 561.85 FEET; THENCE SOUTH 86 DEGREES 17 MINUTES 01 SECONDS EAST, 851.58 FEET TO THE WEST LINE OF THE EAST 72 FEET OF LOT 1; THENCE SOUTH 03 DEGREES 42 MINUTES 51 SECONDS WEST ALONG SAID WEST LINE, 13.27 FEET; THENCE SOUTH 86 DEGREES 17 MINUTES 09 SECONDS EAST PERPENDICULAR TO THE LAST DESCRIBED COURSE, 8.00 FEET; THENCE CONTINUING SOUTH 86 DEGREES 17 MINUTES 09 SECONDS EAST, 14.00 FEET TO THE POINT OF BEGINNING; THENCE SOUTH 03 DEGREES 42 MINUTES 51 SECONDS WEST, 23.49 FEET; THENCE SOUTH 86 DEGREES 17 MINUTES 01 SECONDS EAST, 13.07 FEET; THENCE NORTH 03 DEGREES 42 MINUTES 59 SECONDS EAST, 6.36 FEET; THENCE NORTH 77 DEGREES 23 MINUTES 37 SECONDS EAST, 48.90 FEET TO THE EAST LINE OF THE WEST 10 FEET OF LOT 8; THENCE NORTH 03 DEGREES 42 MINUTES 51 SECONDS EAST ALONG SAID EAST LINE, 19.79 FEET; THENCE NORTH 86 DEGREES 17 MINUTES 01 SECONDS WEST, 20.00 FEET; THENCE SOUTH 03 DEGREES 42 MINUTES 51 SECONDS WEST, 4.80 FEET; THENCE SOUTH 77 DEGREES 24 MINUTES 04 SECONDS WEST, 31.05 FEET; THENCE NORTH 86 DEGREES 17 MINUTES 01 SECONDS WEST, 11.85 FEET TO THE POINT OF BEGINNING. SAID PARCEL CONTAINS 1,324 SQUARE FEET, MORE OR LESS.

Utility Easement

A PARCEL OF LAND FOR UTILITY EASEMENT PURPOSES BEING THAT PART OF THE EAST 72 FEET OF LOT 1, IN BLOCK 17 OF THE ORIGINAL PLAT-WEST SIDE OF ROCK RIVER OF THE CITY OF WATERTOWN, JEFFERSON COUNTY, WISCONSIN, FURTHER DESCRIBED AS FOLLOWS: COMMENCING AT THE NORTHWEST CORNER OF SECTION 4, IN TOWNSHIP 8 NORTH, RANGE 15 EAST, IN THE CITY OF WATERTOWN, JEFFERSON COUNTY, WISCONSIN; THENCE SOUTH 02 DEGREES 17 MINUTES 07 SECONDS EAST ALONG THE WEST LINE OF SAID SECTION, 561.85 FEET; THENCE SOUTH 86 DEGREES 17 MINUTES 01 SECONDS EAST, 851.58 FEET TO THE WEST LINE OF THE EAST 72 FEET OF LOT 1; THENCE CONTINUING SOUTH 86 DEGREES 17 MINUTES 01 SECONDS EAST, 4.48 FEET TO THE POINT OF BEGINNING; THENCE SOUTH 00 DEGREES 30 MINUTES 00 SECONDS EAST, 47.88 FEET; THENCE SOUTH 03 DEGREES 42 MINUTES 51 SECONDS WEST, 4.97 FEET; THENCE SOUTH 41

Docusign Envelope ID: 9592B495-B7EC-4653-87F2-7B6B027BF5B1

DEGREES 17 MINUTES 01 SECONDS EAST, 4.01 FEET; THENCE NORTH 48 DEGREES 42 MINUTES 59 SECONDS EAST, 2.00 FEET; THENCE NORTH 41 DEGREES 17 MINUTES 01 SECONDS WEST, 3.18 FEET; THENCE NORTH 03 DEGREES 42 MINUTES 51 SECONDS EAST, 4.21 FEET; THENCE NORTH 00 DEGREES 30 MINUTES 00 SECONDS WEST, 7.67 FEET; THENCE SOUTH 86 DEGREES 17 MINUTES 01 SECONDS EAST, 5.63 FEET; THENCE NORTH 03 DEGREES 42 MINUTES 59 SECONDS EAST, 3.00 FEET; THENCE SOUTH 86 DEGREES 17 MINUTES 01 SECONDS EAST, 6.93 FEET; THENCE NORTH 03 DEGREES 42 MINUTES 51 SECONDS EAST, 3.49 FEET; THENCE NORTH 86 DEGREES 17 MINUTES 09 SECONDS WEST, 14.00 FEET; THENCE NORTH 03 DEGREES 42 MINUTES 51 SECONDS EAST, 20.00 FEET; THENCE SOUTH 86 DEGREES 17 MINUTES 09 SECONDS EAST, 8.49 FEET; THENCE NORTH 23 DEGREES 13 MINUTES 56 SECONDS WEST, 7.71 FEET; THENCE NORTH 03 DEGREES 42 MINUTES 51 SECONDS EAST, 6.65 FEET; THENCE NORTH 86 DEGREES 17 MINUTES 01 SECONDS WEST, 8.52 FEET TO THE POINT OF BEGINNING. SAID PARCEL CONTAINS 265 SQUARE FEET, MORE OR LESS.

Docusign Envelope ID: 9592B495-B7EC-4653-87F2-7B6B027BF5B1

EXHIBIT B

SITE SURVEY

[Four-page site survey prepared by ASM Consultants, Inc. (Carol A. Sweet-Johnson, PLS No. 2542) and dated May 1, 2024 attached]

Docusign Envelope ID: 9592B495-B7EC-4653-87F2-7B6B027BF5B1

LEGEND

- Light Post
- Utility Pole
- Open Grate Storm Manhole
- Storm Inlet
- Water Service Valve
- Fire Hydrant
- Gas Meter
- Electric Meter
- Communication Pedestal
- Electrical Pedestal
- Centerline of Chainlink Fence
- Overhead Wire(s)
- Underground Storm Line
- Underground Water Line
- Underground Electric Line
- Underground Gas Line
- Underground Communication Line
- Found 3/4" Iron Pipe unless noted otherwise
- Property Line
- Parcel Line
- XXX.XX Measured
- (XXX.XX) Record
- Building
- Asphalt
- Concrete
- Proposed & Amended
- Lease Parcel
- Access Easement
- Utility Easement
- Non-Deciduous Tree
- 862.25 Spot Elevation

LOCATION MAP

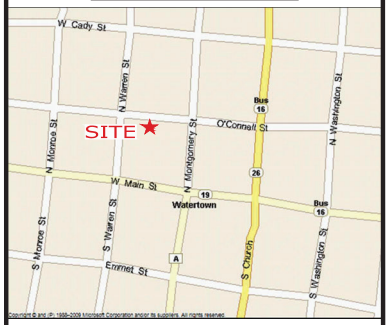

NOT TO SCALE

SURVEY NOTES

EASEMENTS AND SETBACKS SHOWN HEREON ARE BASED UPON THE RECORDED SUBDIVISION PLAT UNLESS NOTED OTHERWISE.

THE SURVEYOR EXPRESSES NO OPINION AS TO THE ACCURACY OF ANY UNDERGROUND UTILITIES WHEN NOT READILY VISIBLE FROM THE SURFACE. IT IS RECOMMENDED THAT THE APPROPRIATE GOVERNMENTAL AGENCY, MUNICIPALITY AND/OR UTILITY COMPANY BE CONTACTED FOR VERIFICATION.

THE PERMANENT PARCEL INDEX NUMBER FOR THE PROPERTY ENCUMBERED BY THE LEASE PARCEL AND EASEMENTS DESCRIBED HEREON IS 291-0815-0422-082-01.

THE FLOOD RATE INSURANCE MAP SHOWS THAT THE PROPOSED LEASE AREA AND EASEMENTS DESCRIBED HEREON ARE FALLING WITHIN ZONE "X", ACCORDING TO COMMUNITY NUMBER 550107, CITY OF WATERTOWN, FOUND ON MAP NUMBER 55055C0078F, JEFFERSON COUNTY AND INCORPORATED AREAS, MAP REVISED FEBRUARY 4, 2015.
ZONE "X" IS AREA OF MINIMAL FLOOD HAZARD.

A CURRENT TITLE REPORT WAS NOT FURNISHED TO US FOR OUR USE IN PREPARING THIS SURVEY. THEREFORE THERE MAY BE ADDITIONAL EASEMENTS AND/OR SERVITUDES EFFECTING THIS PROPERTY WHICH ARE NOT SHOWN ON THIS SURVEY.

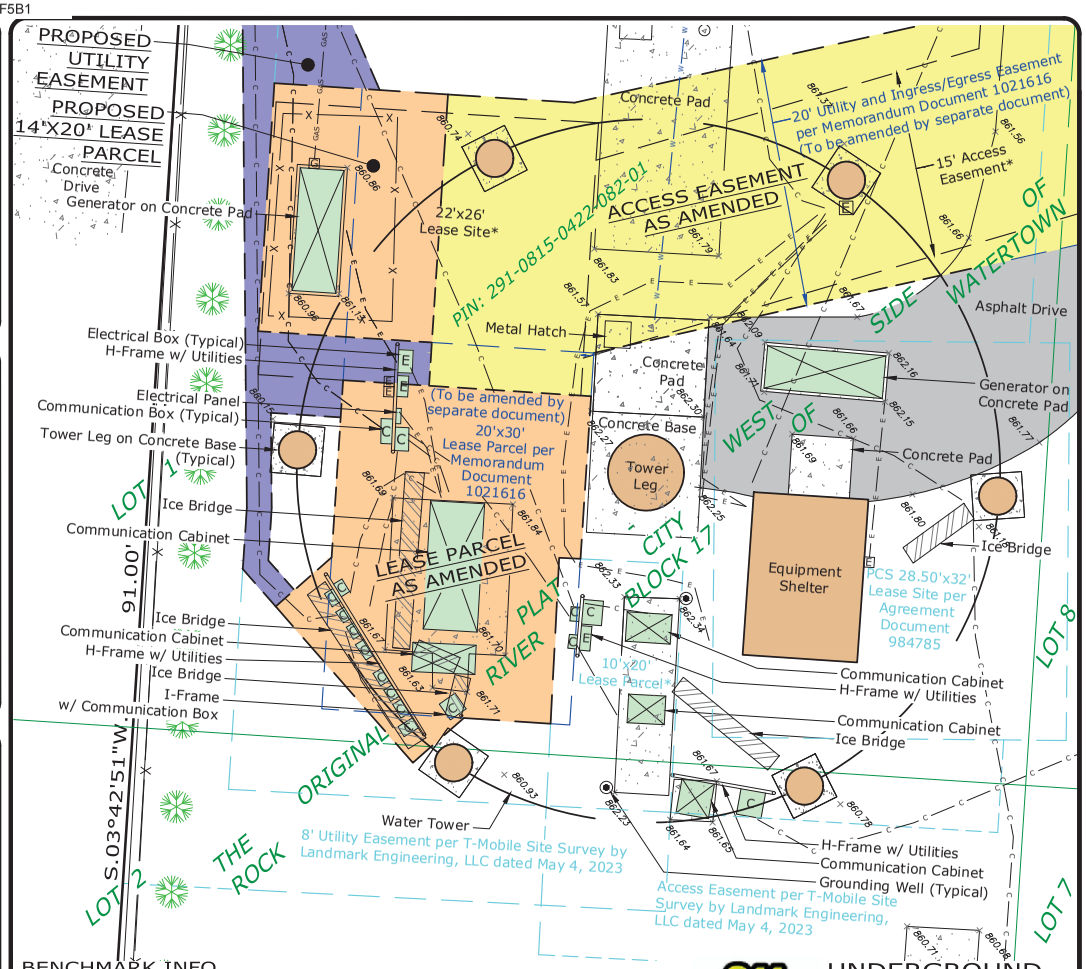

BENCHMARK INFO

SOURCE BENCHMARK:	NGS MONUMENT
DESIGNATION	- RYV A
PID	- AH5310
STATE / COUNTY	- WI / JEFFERSON
USGS QUAD	- WATERTOWN (2018)
ELEVATION = 814.95	(NAVD88)

*per Cingular Wireless Survey Filed and Received in the Office of County Surveyor on December 12, 2003.

UNDERGROUND UTILITY LOCATE

811 Know what's below. Call before you dig.

SUBSURFACE UTILITY PARTNERS, LLC
(Private Locator)
MARKED BY: 2/2/2024
(Utilities marked)

BASIS OF BEARING

BEARINGS SHOWN HEREON ARE BASED ON WISCONSIN STATE PLANE, SOUTH ZONE, NAD83 (2011)
MEAN MAGNETIC DECLINATION OBTAINED FROM U.S.G.S. 7 1/2 MINUTE SERIES MAP WATERTOWN QUADRANGLE STATE OF WISCONSIN

LATITUDE: N 43° 11' 44.71"
LONGITUDE: W088° 43' 49.56"
AT CENTER OF EXISTING TOWER
COMPLIES WITH F.A.A. 1/A ACCURACY REQUIREMENTS

MN 3°17' 68 MILS — GN 1°09' 20 MILS
UTM GRID AND 2019 MAGNETIC NORTH DECLINATION AT CENTER OF QUAD MAP

SCALE : 1" = 10'
0' 5' 10' 20'
11" X 17" PRINT IS THE FULL SCALE FORMAT OF THIS SURVEY.
ANY OTHER SIZE IS AT AN ADJUSTED SCALE.

SHEET INDEX

SHEET L-1: SITE TOPOGRAPHIC DETAIL
SHEET L-2: SITE TOPOGRAPHIC DETAIL CONTINUED
SHEET L-3: PARENT TRACT DETAIL AND LEGAL DESCRIPTION
SHEET L-4: LEASE PARCELS AND EASEMENTS DETAIL AND LEGAL DESCRIPTIONS

SURVEYOR'S CERTIFICATE

STATE OF ILLINOIS }
COUNTY OF KANE } SS

I, CAROL A. SWEET-JOHNSON, AN WISCONSIN PROFESSIONAL LAND SURVEYOR, DO HEREBY CERTIFY THAT THE PLAT SHOWN HEREON, BEING COMPLETED IN THE FIELD ON 2/2/2024 IS A CORRECT REPRESENTATION OF A SURVEY PERFORMED AT AND UNDER MY DIRECTION.

THIS SURVEY MEETS THE MINIMUM TECHNICAL STANDARDS FOR A PROPERTY SURVEY SET FORTH BY WISCONSIN STATE LAW AE 7.

ALL DIMENSIONS ARE IN FEET AND DECIMAL PARTS THEREOF.

GIVEN UNDER MY HAND AND SEAL
THIS 1ST DAY OF MAY, A.D. 2024.

WISCONSIN CAROL A. SWEET-JOHNSON 2542 BATAVIA ILLINOIS LAND SURVEYOR

CAROL A. SWEET-JOHNSON
WISCONSIN PROFESSIONAL LAND SURVEYOR NO. 2542
LICENSE EXPIRES 1/31/2026

NO.	DATE	REVISION
1.	2/2/2024	FIELD SURVEY COMPLETED
2.	2/16/2024	ISSUED PRELIMINARY SURVEY
3.	3/15/2024	ADDED LEASE PARCEL AND RE-ISSUED PRELIMINARY SURVEY
4.	4/15/2024	ADDED UTILITY EASEMENT #2 RE-ISSUED PRELIMINARY
5.	4/24/2024	REVISED UTILITY EASEMENTS, COMBINED INTO ONE EASEMENT
6.	5/1/2024	FINAL SURVEY COMPLETED

ADVANCED SURVEYING & MAPPING — Putting the Pieces Together.... Since 1984

PREPARED BY:

ASM Consultants, Inc.
16 E Wilson St - Batavia IL 60510
(630) 879-0200 - advanced@advct.com
Professional Design Firm #184-006014 expires 4/30/2025
© COPYRIGHT 2024, ASM CONSULTANTS, INC. ALL RIGHTS RESERVED.

PLAT OF SURVEY OF LEASE PARCELS AND EASEMENTS

PREPARED FOR:

at&t

NEW CINGULAR WIRELESS PCS, LLC
95 W Algonquin Rd
Arlington Heights, IL 60005

SITE DESIGNATION INFORMATION:

O'CONNELL WT
WI1058
509 O'CONNELL ST
WATERTOWN, WI 53094
JEFFERSON COUNTY

DRAWN BY: EM
CHECKED BY: CSJ

PROJECT NO. 528103

SHEET 1 OF 4

L-1

Docusign Envelope ID: 9592B495-B7EC-4653-87F2-7B6B027BF5B1

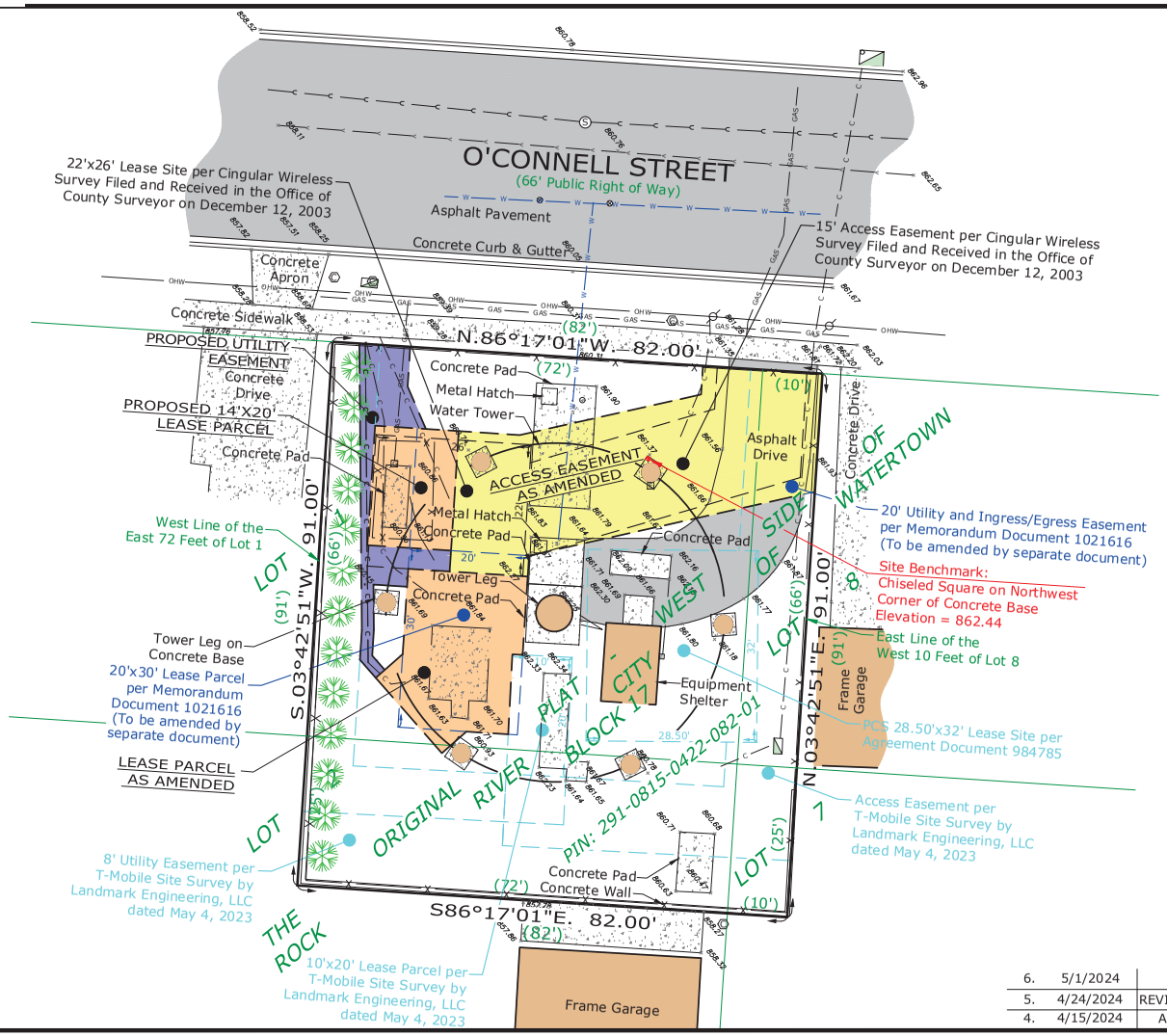

SCALE : 1" = 20'

0' 10' 20' 40'

BEARINGS SHOWN HEREON ARE BASED ON WISCONSIN STATE PLANE, SOUTH ZONE, NAD83 (2011)

Tower Heights:
Top of Lightning Rod = 162.0' AGL
Top of Panel Antenna = 162.0' AGL
Bottom of Panel Antenna = 154.6' AGL
Top of Bracket = 155.8' AGL
Top of Tower = 154.4' AGL
Top of Railing = 136.5' AGL
Bottom of Railing = 132.9' AGL
AGL = Above Ground Level

6.	5/1/2024	FINAL SURVEY COMPLETED
5.	4/24/2024	REVISED UTILITY EASEMENTS, COMBINED INTO ONE EASEMENT
4.	4/15/2024	ADDED UTILITY EASEMENT #2 RE-ISSUED PRELIMINARY

ADVANCED SURVEYING & MAPPING
Putting the Pieces Together...
Since 1984

PREPARED BY:

ASM Consultants, Inc.
16 E Wilson St - Batavia IL 60510
(630) 879-0200 - advanced@advct.com
Professional Design Firm #184-006014 expires 4/30/2025

© COPYRIGHT 2024, ASM CONSULTANTS, INC. ALL RIGHTS RESERVED.

PLAT OF SURVEY OF LEASE PARCELS AND EASEMENTS

PREPARED FOR:

at&t

NEW CINGULAR WIRELESS PCS, LLC
95 W Algonquin Rd
Arlington Heights, IL 60005

NO.	DATE	REVISION
1.	2/2/2024	FIELD SURVEY COMPLETED
2.	2/16/2024	ISSUED PRELIMINARY SURVEY
3.	3/15/2024	ADDED LEASE PARCEL AND RE-ISSUED PRELIMINARY SURVEY

SITE DESIGNATION INFORMATION:

O'CONNELL WT
WI1058
509 O'CONNELL ST
WATERTOWN, WI 53094
JEFFERSON COUNTY

DRAWN BY: EM
CHECKED BY: CSJ

PROJECT NO. 528103

SHEET 2 OF 4

L-2

Docusign Envelope ID: 9592B495-B7EC-4653-87F2-7B6B027BF5B1

PARENT TRACT LEGAL DESCRIPTION:
THE EAST 72 FEET OF LOT 1, THE WEST 10 FEET OF LOT 8, THE EAST 72 FEET OF THE NORTH 25 FEET OF LOT 2, AND THE WEST 10 FEET OF THE NORTH 25 FEET OF LOT 7, ALL IN BLOCK 17 OF THE ORIGINAL PLAT-WEST SIDE OF ROCK RIVER OF THE CITY OF WATERTOWN, JEFFERSON COUNTY, WISCONSIN.

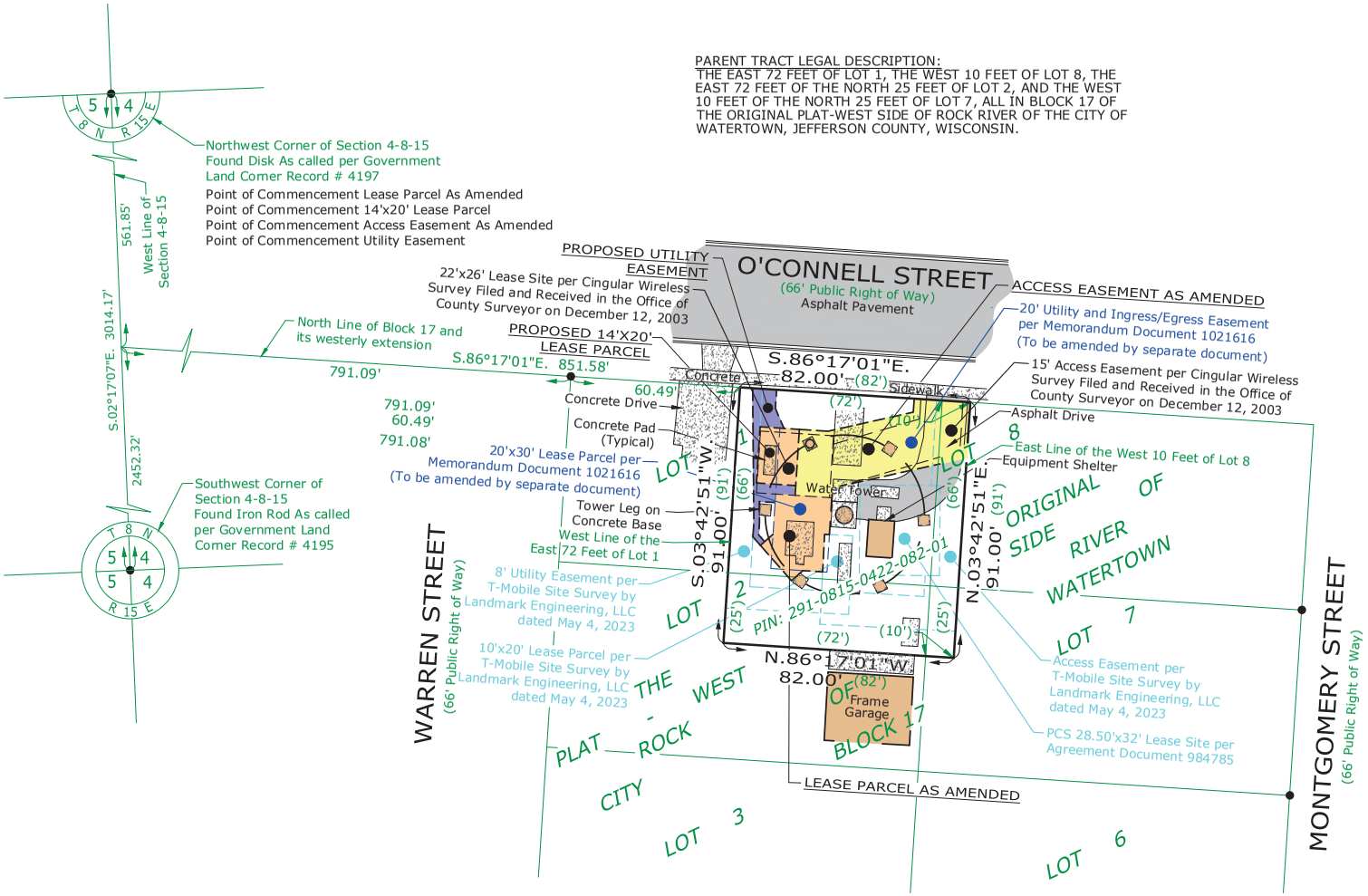

SCALE : 1" = 40'
0' 20' 40' 80'
BEARINGS SHOWN HEREON ARE BASED ON WISCONSIN STATE PLANE, SOUTH ZONE, NAD83 (2011)

6.	5/1/2024	FINAL SURVEY COMPLETED
5.	4/24/2024	REVISED UTILITY EASEMENTS, COMBINED INTO ONE EASEMENT
4.	4/15/2024	ADDED UTILITY EASEMENT #2 RE-ISSUED PRELIMINARY

ADVANCED SURVEYING & MAPPING
Putting the Pieces Together...
Since 1984

PREPARED BY:
ASM
ASM Consultants, Inc.
16 E Wilson St - Batavia IL 60510
(630) 879-0200 - advanced@advct.com
Professional Design Firm #184-006014 expires 4/30/2025
© COPYRIGHT 2024, ASM CONSULTANTS, INC. ALL RIGHTS RESERVED.

PLAT OF SURVEY OF LEASE PARCELS AND EASEMENTS

PREPARED FOR:
at&t
NEW CINGULAR WIRELESS PCS, LLC
95 W Algonquin Rd
Arlington Heights, IL 60005

NO.	DATE	REVISION
1.	2/2/2024	FIELD SURVEY COMPLETED
2.	2/16/2024	ISSUED PRELIMINARY SURVEY
3.	3/15/2024	ADDED LEASE PARCEL AND RE-ISSUED PRELIMINARY SURVEY

SITE DESIGNATION INFORMATION:
O'CONNELL WT
WI1058
509 O'CONNELL ST
WATERTOWN, WI 53094
JEFFERSON COUNTY

DRAWN BY: EM
CHECKED BY: CSJ
PROJECT NO. 528103
SHEET 3 OF 4
L-3

Docusign Envelope ID: 9592B495-B7EC-4653-87F2-7B6B027BF5B1

1	S.86°17'09"E.	15.07'
2	S.86°17'01"E.	20.00'
3	S.03°42'59"W.	13.11'
4	N.87°01'25"W.	1.72'
5	S.02°58'35"W.	13.38'
6	N.86°17'01"W.	7.00'
7	S.48°42'59"W.	5.45'
8	N.41°17'01"W.	16.74'
9	N.48°42'59"E.	5.99'
10	N.03°42'59"E.	14.30'
11	S.86°17'09"E.	8.00'
12	S.86°17'09"E.	14.00'
13	S.03°42'51"W.	20.00'
14	N.86°17'09"W.	14.00'
15	N.03°42'51"E.	20.00'
16	S.86°17'01"E.	13.07'
17	N.03°42'51"E.	19.79'
18	N.86°17'01"W.	20.00'
19	S.03°42'51"W.	4.80'
20	N.86°17'01"W.	11.85'
21	S.03°42'51"W.	4.97'
22	S.41°17'01"E.	4.01'
23	N.48°42'59"E.	2.00'
24	N.41°17'01"W.	3.18'
25	N.03°42'51"E.	4.21'
26	N.00°30'00"W.	7.67'
27	S.86°17'01"E.	5.63'
28	N.03°42'59"E.	3.00'
29	S.86°17'01"E.	6.93'
30	N.03°42'51"E.	3.49'
31	S.86°17'09"E.	8.49'
32	N.23°13'56"W.	7.71'
33	N.03°42'51"E.	6.65'
34	N.86°17'01"W.	8.52'
35	N.03°42'59"E.	6.36'

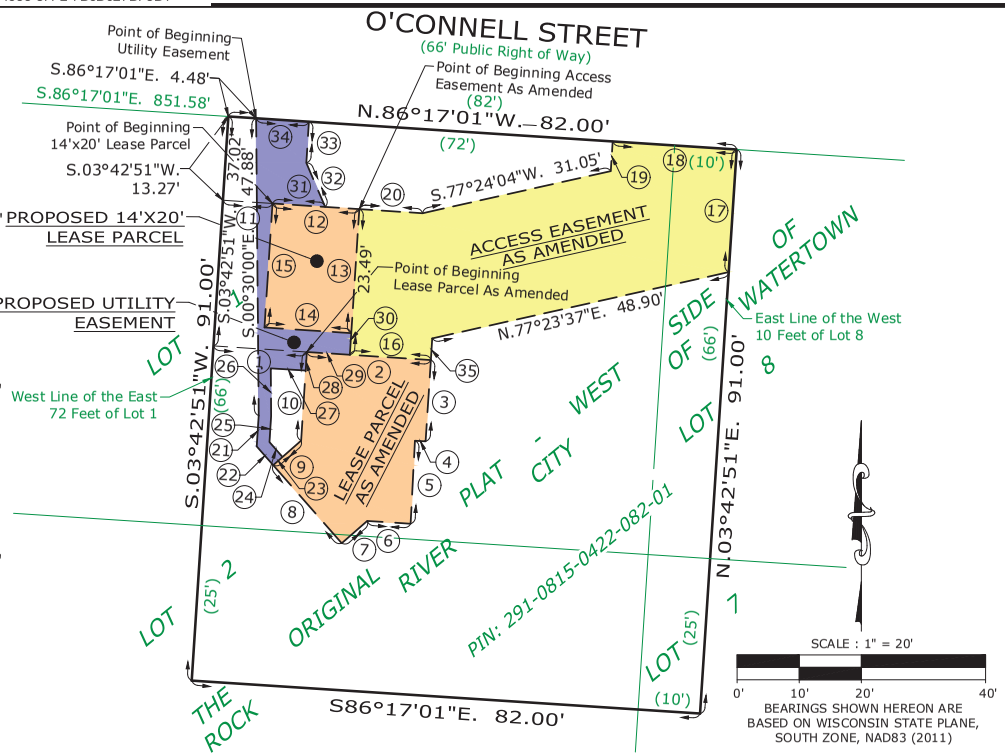

LEASE PARCEL LEGAL DESCRIPTION (AS SURVEYED AND AMENDED):
A PARCEL OF LAND FOR LEASE AREA PURPOSES BEING THAT PART OF THE EAST 72 FEET OF LOT 1 AND THE EAST 72 FEET OF THE NORTH 25 FEET OF LOT 2, ALL IN BLOCK 17 OF THE ORIGINAL PLAT-WEST SIDE OF ROCK RIVER OF THE CITY OF WATERTOWN, JEFFERSON COUNTY, WISCONSIN, FURTHER DESCRIBED AS FOLLOWS: COMMENCING AT THE NORTHWEST CORNER OF SECTION 4, IN TOWNSHIP 8 NORTH, RANGE 15 EAST, IN THE CITY OF WATERTOWN, JEFFERSON COUNTY, WISCONSIN; THENCE SOUTH 02 DEGREES 17 MINUTES 07 SECONDS EAST ALONG THE WEST LINE OF SAID SECTION, 561.85 FEET; THENCE SOUTH 86 DEGREES 17 MINUTES 01 SECONDS EAST, 851.58 FEET TO THE WEST LINE OF THE EAST 72 FEET OF LOT 1; THENCE SOUTH 03 DEGREES 42 MINUTES 51 SECONDS WEST ALONG SAID WEST LINE, 37.02 FEET; THENCE SOUTH 86 DEGREES 17 MINUTES 09 SECONDS EAST PERPENDICULAR TO THE LAST DESCRIBED COURSE; 15.07 FEET TO THE POINT OF BEGINNING; THENCE CONTINUING SOUTH 86 DEGREES 17 MINUTES 01 SECONDS EAST, 20.00 FEET; THENCE SOUTH 03 DEGREES 42 MINUTES 59 SECONDS WEST, 13.11 FEET; THENCE NORTH 87 DEGREES 01 MINUTES 25 SECONDS WEST, 1.72 FEET; THENCE SOUTH 02 DEGREES 58 MINUTES 35 SECONDS WEST, 13.38 FEET; NORTH 86 DEGREES 17 MINUTES 01 SECONDS WEST, 7.00 FEET; THENCE SOUTH 48 DEGREES 42 MINUTES 59 SECONDS WEST, 5.45 FEET; THENCE NORTH 41 DEGREES 17 MINUTES 01 SECONDS WEST, 16.74 FEET; THENCE NORTH 48 DEGREES 42 MINUTES 59 SECONDS EAST, 5.99 FEET; THENCE NORTH 03 DEGREES 42 MINUTES 59 SECONDS EAST, 14.30 FEET TO THE POINT OF BEGINNING. SAID PARCEL CONTAINS 534 SQUARE FEET, MORE OR LESS.

14' x 20' LEASE PARCEL LEGAL DESCRIPTION (AS SURVEYED):
A PARCEL OF LAND FOR LEASE AREA PURPOSES BEING THAT PART OF THE EAST 72 FEET OF LOT 1 IN BLOCK 17 OF THE ORIGINAL PLAT-WEST SIDE OF ROCK RIVER OF THE CITY OF WATERTOWN, JEFFERSON COUNTY, WISCONSIN, FURTHER DESCRIBED AS FOLLOWS: COMMENCING AT THE NORTHWEST CORNER OF SECTION 4, IN TOWNSHIP 8 NORTH, RANGE 15 EAST, IN THE CITY OF WATERTOWN, JEFFERSON COUNTY, WISCONSIN; THENCE SOUTH 02 DEGREES 17 MINUTES 07 SECONDS EAST ALONG THE WEST LINE OF SAID SECTION, 561.85 FEET; THENCE SOUTH 86 DEGREES 17 MINUTES 01 SECONDS EAST, 851.58 FEET TO THE WEST LINE OF THE EAST 72 FEET OF LOT 1; THENCE SOUTH 03 DEGREES 42 MINUTES 51 SECONDS WEST ALONG SAID WEST LINE, 13.27 FEET; THENCE SOUTH 86 DEGREES 17 MINUTES 09 SECONDS EAST PERPENDICULAR TO THE LAST DESCRIBED COURSE, 8.00 FEET TO THE POINT OF BEGINNING; THENCE CONTINUING SOUTH 86 DEGREES 17 MINUTES 09 SECONDS EAST, 14.00 FEET; THENCE SOUTH 03 DEGREES 42 MINUTES 51 SECONDS WEST, 20.00 FEET; THENCE NORTH 86 DEGREES 17 MINUTES 09 SECONDS WEST, 14.00 FEET; THENCE NORTH 03 DEGREES 42 MINUTES 51 SECONDS EAST, 20.00 FEET TO THE POINT OF BEGINNING. SAID PARCEL CONTAINS 280 SQUARE FEET, MORE OR LESS.

ACCESS EASEMENT LEGAL DESCRIPTION (AS SURVEYED AND AMENDED):
A PARCEL OF LAND FOR ACCESS EASEMENT PURPOSES BEING THAT PART OF THE EAST 72 FEET OF LOT 1 AND THE WEST 10 FEET OF THE NORTH 25 FEET OF LOT 7, ALL IN BLOCK 17 OF THE ORIGINAL PLAT-WEST SIDE OF ROCK RIVER OF THE CITY OF WATERTOWN, JEFFERSON COUNTY, WISCONSIN, FURTHER DESCRIBED AS FOLLOWS: COMMENCING AT THE NORTHWEST CORNER OF SECTION 4, IN TOWNSHIP 8 NORTH, RANGE 15 EAST, IN THE CITY OF WATERTOWN, JEFFERSON COUNTY, WISCONSIN; THENCE SOUTH 02 DEGREES 17 MINUTES 07 SECONDS EAST ALONG THE WEST LINE OF SAID SECTION, 561.85 FEET; THENCE SOUTH 86 DEGREES 17 MINUTES 01 SECONDS EAST, 851.58 FEET TO THE WEST LINE OF THE EAST 72 FEET OF LOT 1; THENCE SOUTH 03 DEGREES 42 MINUTES 51 SECONDS WEST ALONG SAID WEST LINE, 13.27 FEET; THENCE SOUTH 86 DEGREES 17 MINUTES 09 SECONDS EAST PERPENDICULAR TO THE LAST DESCRIBED COURSE, 8.00 FEET; THENCE CONTINUING SOUTH 86 DEGREES 17 MINUTES 09 SECONDS EAST, 14.00 FEET TO THE POINT OF BEGINNING; THENCE SOUTH 03 DEGREES 42 MINUTES 51 SECONDS WEST, 23.49 FEET; THENCE SOUTH 86 DEGREES 17 MINUTES 01 SECONDS EAST, 13.07 FEET; THENCE NORTH 03 DEGREES 42 MINUTES 59 SECONDS EAST, 6.36 FEET; THENCE NORTH 77 DEGREES 23 MINUTES 37 SECONDS EAST, 48.90 FEET TO THE EAST LINE OF THE WEST 10 FEET OF LOT 8; THENCE NORTH 03 DEGREES 42 MINUTES 51 SECONDS EAST ALONG SAID EAST LINE, 19.79 FEET; THENCE NORTH 86 DEGREES 17 MINUTES 01 SECONDS WEST, 20.00 FEET; THENCE SOUTH 03 DEGREES 42 MINUTES 51 SECONDS WEST, 4.80 FEET; THENCE SOUTH 77 DEGREES 24 MINUTES 04 SECONDS WEST, 31.05 FEET; THENCE NORTH 86 DEGREES 17 MINUTES 01 SECONDS WEST, 11.85 FEET TO THE POINT OF BEGINNING. SAID PARCEL CONTAINS 1,324 SQUARE FEET, MORE OR LESS.

UTILITY EASEMENT LEGAL DESCRIPTION (AS SURVEYED):
A PARCEL OF LAND FOR UTILITY EASEMENT PURPOSES BEING THAT PART OF THE EAST 72 FEET OF LOT 1, IN BLOCK 17 OF THE ORIGINAL PLAT-WEST SIDE OF ROCK RIVER OF THE CITY OF WATERTOWN, JEFFERSON COUNTY, WISCONSIN, FURTHER DESCRIBED AS FOLLOWS: COMMENCING AT THE NORTHWEST CORNER OF SECTION 4, IN TOWNSHIP 8 NORTH, RANGE 15 EAST, IN THE CITY OF WATERTOWN, JEFFERSON COUNTY, WISCONSIN; THENCE SOUTH 02 DEGREES 17 MINUTES 07 SECONDS EAST ALONG THE WEST LINE OF SAID SECTION, 561.85 FEET; THENCE SOUTH 86 DEGREES 17 MINUTES 01 SECONDS EAST, 851.58 FEET TO THE WEST LINE OF THE EAST 72 FEET OF LOT 1; THENCE CONTINUING SOUTH 86 DEGREES 17 MINUTES 01 SECONDS EAST, 4.48 FEET TO THE POINT OF BEGINNING; THENCE SOUTH 00 DEGREES 30 MINUTES 00 SECONDS EAST, 47.88 FEET; THENCE SOUTH 03 DEGREES 42 MINUTES 51 SECONDS WEST, 4.97 FEET; THENCE SOUTH 41 DEGREES 17 MINUTES 01 SECONDS EAST, 4.01 FEET; THENCE NORTH 48 DEGREES 42 MINUTES 59 SECONDS EAST, 2.00 FEET; THENCE NORTH 41 DEGREES 17 MINUTES 01 SECONDS WEST, 3.18 FEET; THENCE NORTH 03 DEGREES 42 MINUTES 51 SECONDS EAST, 4.21 FEET; THENCE NORTH 00 DEGREES 30 MINUTES 00 SECONDS WEST, 7.67 FEET; THENCE SOUTH 86 DEGREES 17 MINUTES 01 SECONDS EAST, 5.63 FEET; THENCE NORTH 03 DEGREES 42 MINUTES 59 SECONDS EAST, 3.00 FEET; THENCE SOUTH 86 DEGREES 17 MINUTES 01 SECONDS EAST, 6.93 FEET; THENCE NORTH 03 DEGREES 42 MINUTES 51 SECONDS EAST, 3.49 FEET; THENCE NORTH 86 DEGREES 17 MINUTES 09 SECONDS WEST, 14.00 FEET; THENCE NORTH 03 DEGREES 42 MINUTES 51 SECONDS EAST, 20.00 FEET; THENCE SOUTH 86 DEGREES 17 MINUTES 09 SECONDS EAST, 8.49 FEET; THENCE NORTH 23 DEGREES 13 MINUTES 56 SECONDS WEST, 7.71 FEET; THENCE NORTH 03 DEGREES 42 MINUTES 51 SECONDS EAST, 6.65 FEET; THENCE NORTH 86 DEGREES 17 MINUTES 01 SECONDS WEST, 8.52 FEET TO THE POINT OF BEGINNING. SAID PARCEL CONTAINS 265 SQUARE FEET, MORE OR LESS.

6.	5/1/2024	FINAL SURVEY COMPLETED
5.	4/24/2024	REVISED UTILITY EASEMENTS, COMBINED INTO ONE EASEMENT
4.	4/15/2024	ADDED UTILITY EASEMENT #2 RE-ISSUED PRELIMINARY

ADVANCED SURVEYING & MAPPING
Putting the Pieces Together...
Since 1984

PREPARED BY:
ASM Consultants, Inc.
16 E Wilson St - Batavia IL 60510
(630) 879-0200 - advanced@advct.com
Professional Design Firm #184-006014 expires 4/30/2025
© COPYRIGHT 2024, ASM CONSULTANTS, INC. ALL RIGHTS RESERVED.

PLAT OF SURVEY OF LEASE PARCELS AND EASEMENTS

PREPARED FOR:
at&t
NEW CINGULAR WIRELESS PCS, LLC
95 W Algonquin Rd
Arlington Heights, IL 60005

NO.	DATE	REVISION
1.	2/2/2024	FIELD SURVEY COMPLETED
2.	2/16/2024	ISSUED PRELIMINARY SURVEY
3.	3/15/2024	ADDED LEASE PARCEL AND RE-ISSUED PRELIMINARY SURVEY

SITE DESIGNATION INFORMATION:
O'CONNELL WT
WI1058
509 O'CONNELL ST
WATERTOWN, WI 53094
JEFFERSON COUNTY

DRAWN BY: EM
CHECKED BY: CSJ
PROJECT NO. 528103
SHEET 4 OF 4
L-4

Docusign Envelope ID: 9592B495-B7EC-4653-87F2-7B6B027BF5B1

EXHIBIT C

OVERLAP AREA SURVEY AND LEGAL DESCRIPTION

[Attached in accordance with Section 1.3.1 of the Agreement]

Docusign Envelope ID: 9592B495-B7EC-4653-87F2-7B6B027BF5B1

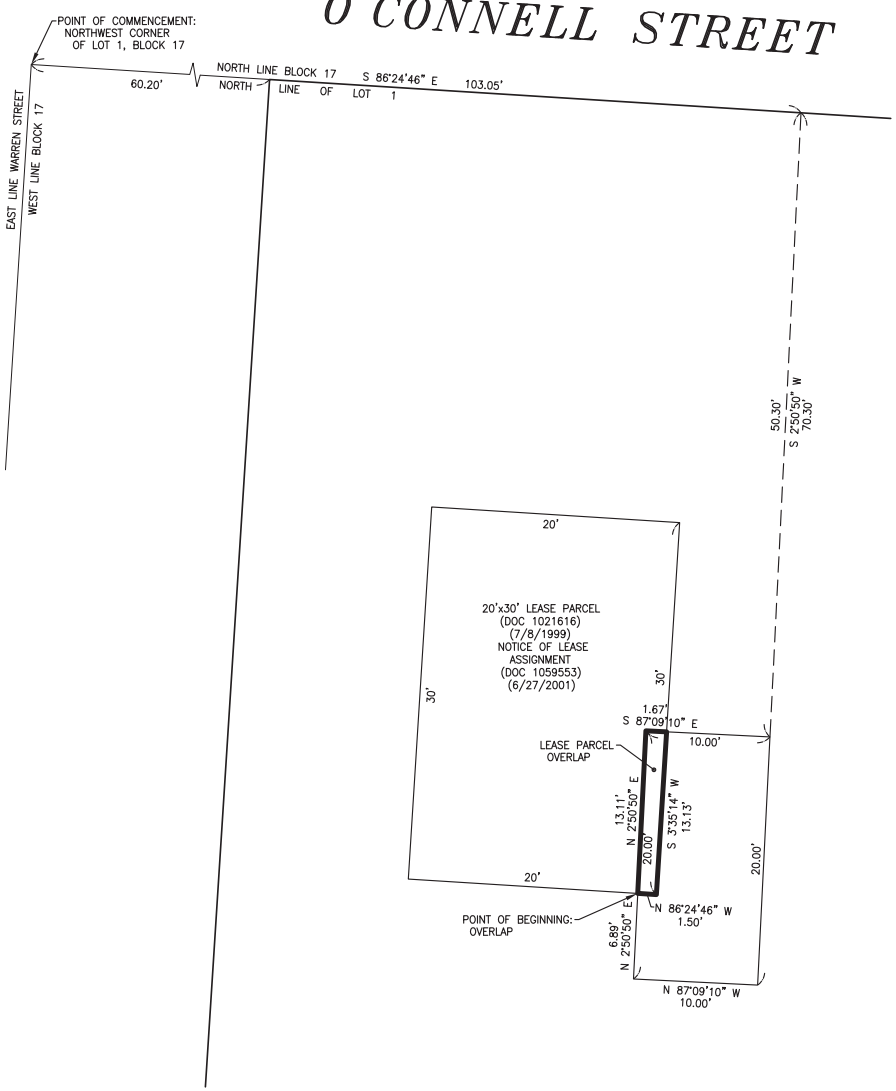

LEASE PARCELS OVERLAP

THAT PART OF LOT 1 IN BLOCK 17 OF THE ORIGINAL PLAT OF THE CITY OF WATERTOWN – WEST SIDE OF THE ROCK RIVER, LOCATED IN THE NORTHWEST QUARTER OF THE NORTHWEST QUARTER OF SECTION 4, TOWNSHIP 8 NORTH, RANGE 15 EAST, DESCRIBED AS FOLLOWS; COMMENCING AT THE NORTHWEST CORNER OF SAID LOT 1; THENCE SOUTH 86°24'46" EAST, ALONG THE NORTH LINE OF SAID LOT 1, 103.05 FEET, MORE OR LESS, TO A POINT ON A LINE THAT IS 0.50 FEET EAST OF AND PARALLEL WITH THE EAST EDGE OF A CONCRETE PAD; THENCE SOUTH 2°50'50" WEST, ALONG SAID PARALLEL LINE, 70.30 FEET; THENCE NORTH 87°09'10" WEST, PERPENDICULAR TO THE LAST DESCRIBED COURSE, 10.00 FEET; THENCE NORTH 2°50'50" EAST 6.89 FEET TO A POINT OF BEGINNING ON THE SOUTH LINE OF THE LEASE PARCEL FROM MEMORANDUM OF LEASE RECORDED JULY 8, 1999, AS DOCUMENT NUMBER 1021616 AND LEASE PARCEL FROM NOTICE OF LEASE ASSIGNMENT RECORDED JUNE 27, 2001, AS DOCUMENT NUMBER 1059553; THENCE CONTINUING NORTH 2°50'50" EAST 13.11 FEET; THENCE SOUTH 87°09'10" EAST PERPENDICULAR TO THE LAST DESCRIBED COURSE, 1.67 FEET; THENCE SOUTH 3°35'14" WEST, ALONG THE EAST LINE OF SAID LEASE PARCELS, 13.13 FEET TO THE SOUTHEAST CORNER OF SAID LEASE PARCELS; THENCE NORTH 86°24'46" WEST, ALONG SAID SOUTH LINE OF SAID LEASE PARCELS, 1.50 FEET TO THE POINT OF BEGINNING, ALL IN THE CITY OF WATERTOWN, JEFFERSON COUNTY, WISCONSIN, AND CONTAINING 21 SQUARE FEET, MORE OR LESS, THEREIN.

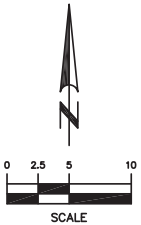

DATED AT PALOS HILLS, ILLINOIS, THIS 4TH DAY OF MAY, A.D. 2023.

MARK H. LANDSTROM
IPLS No. S–2540

T-Mobile
8550 W. Bryn Mawr Ave.
Suite100
Chicago, Illinois 60631
OFFICE: (773) 444-5400
FAX: (773) 444-5500

FULLERTON
ENGINEERING·DESIGN
1100 E. WOODFIELD ROAD, SUITE 500
SCHAUMBURG, ILLINOIS 60173
TEL: 847-908-8400
www.FullertonEngineering.com

6	5/4/23	LEGAL DESCRIPTION
5	3/31/23	ACCESS EASEMENT
4	3/14/23	ESMTS/OVERLAP
3	10/19/22	COMMENTS
2	10/3/22	SITE SURVEY
1	9/27/22	PRELIMINARY

LANDMARK
ENGINEERING LLC
DESIGN FIRM REGISTRATION NO. 184-005577
7808 WEST 103RD STREET
PALOS HILLS, ILLINOIS 60465–1529
Phone (708) 599–3737
PROJECT No. 22–08–111

ML82089A/ ML33XC002

509 O'CONNELL STREET
WATERTOWN, WI 53094
JEFFERSON COUNTY

SHEET TITLE

SITE SURVEY

SHEET NUMBER

SS 3 OF 3

Docusign Envelope ID: 9592B495-B7EC-4653-87F2-7B6B027BF5B1

EXHIBIT D

DRAWINGS OF EXISTING FACILITIES AND EQUIPMENT INVENTORY

[Attached in accordance with Section 1.3.11.3.2 of the Agreement]

Docusign Envelope ID: 9592B495-B7EC-4653-87F2-7B6B027BF5B1

SITE PHOTO

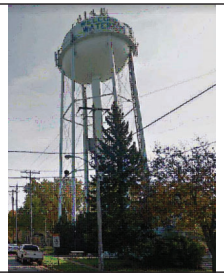

PROJECT : LTE 4C/5C/BWE RRU SWAP
SITE # : WI1058
FA # : 10080074
PTN # : 3352A0Q0GH/ 3352A0Q2LG/ 3352A0Q2NR
PACE # : MRCHI045065/MRCHI045075/ MRCHI045055
JURISDICTION : WATERTOWN
SITE NAME : O'CONNEL WT
ADDRESS : 509 O'CONNEL STREET WATERTOWN, WI 53094

AT&T MOBILITY

ZONUM ELECTRIC
03/19/2021
RAMON B. YACE
REDLINE

SEE THE EFI GLOBAL MOUNT STRUCTURAL ANALYSIS REV2 DATED 1/25/21

SEE THE EFI GLOBAL STRUCTURAL ANALYSIS REPORT REV2 DATED 1/25/21

PROJECT INFORMATION

SITE NAME: O'CONNEL WT
COUNTY: JEFFERSON
ADDRESS: 509 O'CONNEL STREET WATERTOWN, WI 53094
JURISDICTION: WATERTOWN

SITE NUMBER: WI1058
FA NUMBER: 10080074
PTN: 3352A0Q0GH/ 3352A0Q2LG/ 3352A0Q2NR
PACE: MRCHI045065/MRCHI045075/ MRCHI045055

LATITUDE: 43° 11' 44.71" N (43.1958°)
LONGITUDE: 88° 43' 49.56" W (-88.7304°)

SITE OWNER: CITY OF WATERTOWN 106 JONES ST. WATERTOWN, WI 53094

LANDLORD CONTACT: WATERTOWN WATER COMMISSION

APPLICANT: AT&T WIRELESS 930 NATIONAL PARKWAY SCHAUMBURG, IL 60173

AT&T PROJECT MANAGER: DONCO KOCESKI EMAIL: DK1012@ATT.COM

AT&T CONSTRUCTION MANAGER: JASON BRACKEVELT JB6811@ATT.COM

PROJECT CONSULTANTS

PROJECT MANAGEMENT: SAC WIRELESS CONTACT: MICHAEL CARRIGLIO EMAIL: MICHAEL.CARRIGLIO@SACW.COM

SITE ACQUISITION: SAC WIRELESS CONTACT: ADRIANNA MATUSZAK EMAIL: ADRIANNA.MATUSZAK@SACW.COM

ARCHITECT: NESTOR POPOWYCH, A.I.A. SAC AE DESIGN GROUP, INC. 540 W. MADISON ST. 9TH FLOOR CHICAGO, ILLINOIS 60661 CONTACT: GREG PHASSOS PHONE: (312)-971-7884 EMAIL: GREG.PHASSOS@SACW.COM

CONSTRUCTION SAC WIRELESS CONTACT: LUIS GONZALEZ EMAIL: LUIS.GONZALEZ@SACW.COM

SCOPE OF WORK

THIS IS NOT AN ALL INCLUSIVE LIST. CONTRACTOR SHALL UTILIZE SPECIFIED EQUIPMENT PART OR ENGINEER APPROVED EQUIVALENT. CONTRACTOR SHALL VERIFY ALL NEEDED EQUIPMENT TO PROVIDE A FUNCTIONAL SITE. THE PROJECT GENERALLY CONSISTS OF THE FOLLOWING:

- DECOM UMTS 1900 TECHNOLOGY IN POS.4 (TYP OF 3 SECTORS)
- REMOVE (6) EXISTING AT&T UMTS TMAS. (2) PER SECTOR IN POSITION 4. (TYP. OF 3 SECTORS)
- RELOCATE UMTS 850 TECHNOLOGY TO POSITION 1. (BETA SECTOR ONLY)
- INSTALL (3) PROPOSED AT&T DUAL MOUNTS (1) PER SECTOR IN POSITION 2. (TYP. OF 3 SECTORS)

LTE 4C (FNET) SCOPE:

- REMOVE (3) EXISTING AT&T UMTS PANEL ANTENNAS. (1) PER SECTOR IN POSITION 4. (TYP. OF 3 SECTORS)
- INSTALL (2) PROPOSED AT&T UMTS/LTE 4C PANEL ANTENNAS. (1) PER SECTOR IN POSITION 4. (TYP. OF ALPHA & GAMMA SECTORS)
- INSTALL (1) PROPOSED AT&T LTE 4C PANEL ANTENNA IN POSITION 4. (BETA SECTOR ONLY)
- INSTALL (3) PROPOSED AT&T LTE 4C (FNET) RRUS4478 B14 W/2ND FIBER. (1) PER SECTOR IN POSITION 4. (TYP. OF 3 SECTORS)
- INSTALL (4) PROPOSED AT&T CBC78-DS-43 DIPLEXERS TO COMBINE FNET W/UMTS 850 TECHNOLOGY, (2) PER SECTOR IN POSITION 4. (TYP. OF ALPHA & GAMMA SECTORS)
- REMOVE (3) EXISTING RAYCAPS DC6 (SQUID).
- REMOVE (5) EXISTING RAYCAPS DC2-48-60-0-9E.
- INSTALL (3) PROPOSED RAYCAPS DC9-48-60-24-8C (SQUID). (1) PER SECTOR. (TYP. OF 3 SECTORS).
- REUSE (6) EXISTING AT&T 8 AWG DC TRUNK LINES.
- INSTALL (3) PROPOSED AT&T 8 AWG DC TRUNK LINES.
- INSTALL (3) PROPOSED AT&T 24-PAIR FIBER TRUNK LINES.

LTE 5C SCOPE:

- REMOVE (3) EXISTING AT&T BWE/LTE 1C/3C PANEL ANTENNAS. (1) PER SECTOR IN POSITION 3. (TYP. OF 3 SECTORS)
- INSTALL (3) PROPOSED AT&T BWE/LTE 1C/3C/5C PANEL ANTENNAS. (1) PER SECTOR IN POSITION 3. (TYP. OF 3 SECTORS)
- REMOVE (3) EXISTING AT&T LTE 1C (700) RRUS11. (1) PER SECTOR IN POSITION 3. (TYP. OF 3 SECTORS).
- INSTALL (3) PROPOSED LTE 1C/5C (700/850) RRUS4449 B5/B12 W/SECOND FIBER AND POWER. (1) PER SECTOR IN POSITION 3. (TYP. OF 3 SECTORS)

BWE RRU SWAP SCOPE:

- REMOVE (3) EXISTING AT&T BWE (AWS) RRUS11+A2. (1) PER SECTOR IN POSITION 3. (TYP. OF 3 SECTORS).
- INSTALL (3) PROPOSED BWE (AWS) RRUS4426 B66 W/SECOND FIBER. (1) PER SECTOR IN POSITION 3. (TYP. OF 3 SECTORS)

LTE 4C (FNET) GROUND SCOPE:

- INSTALL (3) PROPOSED 25A BREAKERS IN EXISTING POWER PLANT.
- INSTALL (1) PROPOSED 15A BREAKER IN EXISTING POWER PLANT.
- INSTALL (1) PROPOSED 6630 UNIT IN EXISTING PURCELL CABINET.
- INSTALL (1) PROPOSED IDLE CABLE.
- INSTALL (3) PROPOSED ALARM CABLES.
- INSTALL (1) PROPOSED DC12-48-60-0-25E OUTDOOR RAYCAP ON EXISTING ICE BRIDGE POST.

LTE 5C GROUND SCOPE:

- INSTALL (3) PROPOSED 25A BREAKERS IN EXISTING POWER PLANT.
- INSTALL (1) PROPOSED 15A BREAKER IN EXISTING POWER PLANT.
- INSTALL (1) PROPOSED 6630 UNIT IN EXISTING PURCELL CABINET.

BWE RRU SWAP GROUND SCOPE:

- INSTALL (3) PROPOSED 30A BREAKERS IN EXISTING POWER PLANT.

DRAWING INDEX

T1	TITLE SHEET
SP1	NOTES & SPECIFICATIONS
SP2	PAINTING NOTES
A0	OVERALL SITE PLAN
A1	COMPOUND PLAN
A2	EQUIPMENT PLAN
2 A3	TOWER ELEVATION
A4	ANTENNA PLAN
A5	CABLE NOTES & COLOR CODING
2 A6	ANTENNA, RRUS AND MOUNTING DETAILS
2 A6.1	ANTENNA, RRUS AND MOUNTING DETAILS
A6.2	MOUNTING DETAILS
2 A7	ANTENNA & CABLE CONFIGURATION
E1	UTILITY PLAN
G1	GROUNDING DETAILS

VICINITY MAP

LOCAL MAP

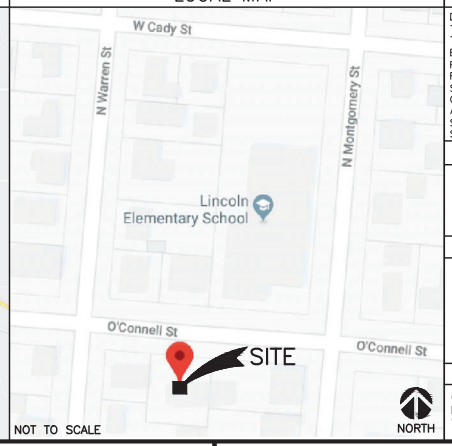

DRIVING DIRECTIONS

DIRECTIONS FROM: GENERAL MITCHELL INTERNATIONAL AIRPORT. TAKE I-41/I-894 W AND I-94 W TO COUNTY RD F IN CONCORD. TAKE EXIT 275 FROM I-94 W, CONTINUE ONTO WI-119 W, TAKE THE EXIT TOWARD MILWAUKEE, CONTINUE ONTO I-41/I-43 S/I-894 W, FOLLOW SIGNS FOR INTERSTATE 894 N/U.S. 45 N, TAKE EXIT 1A-B FOR I-94 W, TAKE EXIT 275 FOR COUNTY RD F TOWARD SULLIVAN/IXONIA, TURN LEFT ONTO COUNTY RD F, TURN RIGHT ONTO CTY RD E, TURN LEFT ONTO E MAIN ST, TURN RIGHT ONTO DEWEY AVE, TURN LEFT ONTO E CADY ST, TURN LEFT ONTO N MONTGOMERY ST, TURN RIGHT AT THE 1ST CROSS STREET ONTO O'CONNELL ST, SITE WILL BE ON THE LEFT SIDE.

811 Know what's below. Call before you dig.

TO OBTAIN LOCATION OF PARTICIPANTS UNDERGROUND FACILITIES BEFORE YOU DIG IN WISCONSIN, CALL LOCAL STATE ONE CALL
TOLL FREE: 1-800-242-8511 OR www.diggersholline.com
WISCONSIN STATUTE REQUIRES MIN OF 2 WORKING DAYS NOTICE BEFORE YOU EXCAVATE

CODE COMPLIANCE

- 2015 INTERNATIONAL BUILDING CODE.
- 2017 NATIONAL ELECTRICAL CODE
- ANSI/TIA-222-G STANDARDS FOR ANTENNA SUPPORTING STRUCTURES.

REFERENCE MATERIALS

- THESE DRAWINGS ARE BASED AT&T SCOPING DOCUMENT DATED 07/22/2019
- REVISED RFDS PENDING. CONTRACTOR TO USE LATEST VERSION WITH CD'S PER SCOPE OF WORK.

SPECIAL NOTES

- ALL WORK SHALL BE INSTALLED IN CONFORMANCE WITH CURRENT AT&T CONSTRUCTION INSTALLATION GUIDE.
- EXISTING CONDITIONS WILL BE CHANGED & VERIFIED IN FIELD. IF SIGNIFICANT DEVIATIONS OR DETERIORATION ARE ENCOUNTERED AT THE TIME OF CONSTRUCTION, A REPAIR PERMIT WILL BE OBTAINED & CONTRACTOR SHALL NOTIFY ENGINEER IMMEDIATELY.
- THESE DRAWINGS ARE FULL SIZE & SCALEABLE ON 11"X17" SHEET SIZE.
- STATEMENT THAT COMPLIANCE WITH THE ENERGY CODE IS NOT REQUIRED. -SCOPE OF WORK DOES NOT INVOLVE MODIFICATIONS TO EXTERIOR ENVELOPE OF BUILDING, HVAC SYSTEMS OR ELECTRICAL LIGHTING.

DO NOT SCALE DRAWINGS

CONTRACTOR SHALL VERIFY ALL PLANS & EXISTING DIMENSIONS & CONDITIONS ON THE JOB SITE & SHALL IMMEDIATELY NOTIFY THE ARCHITECT OR ENGINEER IN WRITING OF ANY DISCREPANCIES BEFORE PROCEEDING WITH THE WORK OR BE RESPONSIBLE FOR SAME.

THE INFORMATION CONTAINED IN THIS SET OF CONSTRUCTION DOCUMENTS IS PROPRIETARY BY NATURE. ANY USE OR DISCLOSURE OTHER THAN THAT WHICH RELATES TO CARRIER SERVICES IS STRICTLY PROHIBITED.

AT&T 930 NATIONAL PARKWAY SCHAUMBURG, IL 60173

SAC WIRELESS 540 W. MADISON ST. 9TH FLOOR CHICAGO, IL 60661 www.sacw.com 312.895.4977

A&E SAC WIRELESS 540 W. MADISON ST. 9TH FLOOR CHICAGO, IL 60661 www.sacw.com 312.895.4977

LTE 4C/5C/BWE RRU SWAP
10080074
O'CONNEL WT
509 O'CONNEL STREET
WATERTOWN, WI 53094

REVISIONS

REV.	DATE	DESCRIPTION	INITIALS
4	02/25/21	FOR CONSTRUCTION	BM
3	02/02/21	FOR CONSTRUCTION	BM
2	02/20/20	FOR CONSTRUCTION	AR
1	10/18/19	FOR CONSTRUCTION	BM

NOT FOR CONSTRUCTION UNLESS LABELED AS FOR CONSTRUCTION

WISCONSIN NESTOR POPOWYCH A-3317 CHICAGO, IL ARCHITECT

DATE: 02/25/21

"I HEREBY CERTIFY THAT THESE PLANS WERE PREPARED BY ME OR UNDER MY DIRECT SUPERVISION AND THAT I AM A DULY REGISTERED ARCHITECT UNDER THE LAWS OF THE STATE OF WISCONSIN"

SHEET TITLE: TITLE SHEET

SHEET NUMBER: T1

Docusign Envelope ID: 9592B495-B7EC-4653-87F2-7B6B027BF5B1

THE INFORMATION CONTAINED IN THIS SET OF CONSTRUCTION DOCUMENTS IS PROPRIETARY BY NATURE. ANY USE OR DISCLOSURE OTHER THAN THAT WHICH RELATES TO CARRIER SERVICES IS STRICTLY PROHIBITED.

GENERAL CONSTRUCTION

1. FOR THE PURPOSE OF CONSTRUCTION DRAWINGS, THE FOLLOWING DEFINITIONS SHALL APPLY:
   CONTRACTOR/CM – SAC WIRELESS
   SUB–CONTRACTOR – PER TRADE
   OWNER – AT&T WIRELESS
2. ALL SITE WORK SHALL BE COMPLETED AS INDICATED ON THE DRAWINGS AND AT&T PROJECT SPECIFICATIONS.
3. GENERAL CONTRACTOR SHALL VISIT THE SITE AND SHALL FAMILIARIZE HIMSELF WITH ALL CONDITIONS AFFECTING THE PROPOSED WORK AND SHALL MAKE PROVISIONS. GENERAL CONTRACTOR SHALL BE RESPONSIBLE FOR FAMILIARIZING HIMSELF WITH ALL CONTRACT DOCUMENTS, FIELD CONDITIONS, DIMENSIONS, AND CONFIRMING THAT THE WORK MAY BE ACCOMPLISHED AS SHOWN PRIOR TO PROCEEDING WITH CONSTRUCTION. ANY DISCREPANCIES SHALL BE BROUGHT TO THE ATTENTION OF THE ENGINEER PRIOR TO THE COMMENCEMENT OF WORK.
4. ALL MATERIALS FURNISHED AND INSTALLED SHALL BE IN STRICT ACCORDANCE WITH ALL APPLICABLE CODES, REGULATIONS, AND ORDINANCES. GENERAL CONTRACTOR SHALL ISSUE ALL APPROPRIATE NOTICES AND COMPLY WITH ALL LAWS, ORDINANCES, RULES, REGULATIONS, AND LAWFUL ORDERS OF ANY PUBLIC AUTHORITY REGARDING THE PERFORMANCE OF WORK.
5. ALL WORK CARRIED OUT SHALL COMPLY WITH ALL APPLICABLE MUNICIPAL AND UTILITY COMPANY SPECIFICATIONS AND LOCAL JURISDICTIONAL CODES, ORDINANCES, AND APPLICABLE REGULATIONS.
6. UNLESS NOTED OTHERWISE, THE WORK SHALL INCLUDE FURNISHING MATERIALS, EQUIPMENT, APPURTENANCES, AND LABOR NECESSARY TO COMPLETE ALL INSTALLATIONS AS INDICATED ON THE DRAWINGS.
7. PLANS ARE NOT TO BE SCALED. THESE PLANS ARE INTENDED TO BE A DIAGRAMMATIC OUTLINE ONLY UNLESS OTHERWISE NOTED. DIMENSIONS SHOWN ARE TO FINISH SURFACES UNLESS OTHERWISE NOTED. SPACING BETWEEN EQUIPMENT IS THE MINIMUM REQUIRED CLEARANCE. THEREFORE, IT IS CRITICAL TO FIELD VERIFY DIMENSIONS, SHOULD THERE BE ANY QUESTIONS REGARDING THE CONTRACT DOCUMENTS, THE CONTRACTOR SHALL BE RESPONSIBLE FOR OBTAINING A CLARIFICATION FROM THE ENGINEER PRIOR TO PROCEEDING WITH THE WORK. DETAILS ARE INTENDED TO SHOW DESIGN INTENT. MODIFICATIONS MAY BE REQUIRED TO SUIT JOB DIMENSIONS OR CONDITIONS AND SUCH MODIFICATIONS SHALL BE INCLUDED AS PART OF WORK AND PREPARED BY THE ENGINEER PRIOR TO PROCEEDING WITH WORK.
8. THE CONTRACTOR SHALL INSTALL ALL EQUIPMENT AND MATERIALS IN ACCORDANCE WITH MANUFACTURER'S RECOMMENDATIONS UNLESS SPECIFICALLY STATED OTHERWISE.
9. IF THE SPECIFIED EQUIPMENT CANNOT BE INSTALLED AS SHOWN ON THESE DRAWINGS, THE CONTRACTOR SHALL PROPOSE AN ALTERNATIVE INSTALLATION SPACE FOR APPROVAL BY THE ENGINEER PRIOR TO PROCEEDING.
10. GENERAL CONTRACTOR SHALL BE RESPONSIBLE FOR THE SAFETY OF WORK AREA, ADJACENT AREAS AND BUILDING OCCUPANTS THAT ARE LIKELY TO BE AFFECTED BY THE WORK UNDER THIS CONTRACT. WORK SHALL CONFIRM TO ALL OSHA REQUIREMENTS AND THE LOCAL JURISDICTION.
11. GENERAL CONTRACTOR SHALL COORDINATE WORK AND SCHEDULE WORK ACTIVITIES WITH OTHER DISCIPLINES.
12. ERECTION SHALL BE DONE IN A WORKMANLIKE MANNER BY COMPETENT EXPERIENCED WORKMAN IN ACCORDANCE WITH APPLICABLE CODES AND THE BEST ACCEPTED PRACTICE. ALL MEMBERS SHALL BE LAID PLUMB AND TRUE AS INDICATED ON THE DRAWINGS.
13. SEAL PENETRATIONS THROUGH FIRE RATED AREAS WITH UL LISTED MATERIALS APPROVED BY LOCAL JURISDICTION. CONTRACTOR SHALL KEEP AREA CLEAN, HAZARD FREE, AND DISPOSE OF ALL DEBRIS.
14. WORK PREVIOUSLY COMPLETED IS REPRESENTED BY LIGHT SHADED LINES AND NOTES. THE SCOPE OF WORK FOR THIS PROJECT IS REPRESENTED BY DARK SHADED LINES AND NOTES. CONTRACTOR SHALL NOTIFY THE GENERAL CONTRACTOR OF ANY EXISTING CONDITIONS THAT DEVIATE FROM THE DRAWINGS PRIOR TO BEGINNING CONSTRUCTION.
15. CONTRACTOR SHALL PROVIDE WRITTEN NOTICE TO THE CONSTRUCTION MANAGER 48 HOURS PRIOR TO COMMENCEMENT OF WORK.
16. THE CONTRACTOR SHALL PROTECT EXISTING IMPROVEMENTS, PAVEMENTS, CURBS, LANDSCAPING AND STRUCTURES. ANY DAMAGED PART SHALL BE REPAIRED AT CONTRACTOR'S EXPENSE TO THE SATISFACTION OF THE OWNER.
17. THE CONTRACTOR SHALL CONTACT UTILITY LOCATING SERVICES PRIOR TO THE START OF CONSTRUCTION.
18. GENERAL CONTRACTOR SHALL COORDINATE AND MAINTAIN ACCESS FOR ALL TRADES AND CONTRACTORS TO THE SITE AND/OR BUILDING.
19. THE GENERAL CONTRACTOR SHALL BE RESPONSIBLE FOR SECURITY OF THE SITE FOR THE DURATION OF CONSTRUCTION UNTIL JOB COMPLETION.
20. THE GENERAL CONTRACTOR SHALL MAINTAIN IN GOOD CONDITION ONE COMPLETE SET OF PLANS WITH ALL REVISIONS, ADDENDA, AND CHANGE ORDERS ON THE PREMISES AT ALL TIMES.
21. THE GENERAL CONTRACTOR SHALL PROVIDE PORTABLE FIRE EXTINGUISHERS WITH A RATING OF NOT LESS THAN 2–A OT 2–A:10–B:C AND SHALL BE WITHIN 25 FEET OF TRAVEL DISTANCE TO ALL PORTIONS OF WHERE THE WORK IS BEING COMPLETED DURING CONSTRUCTION.
22. ALL EXISTING ACTIVE SEWER, WATER, GAS, ELECTRIC, AND OTHER UTILITIES SHALL BE PROTECTED AT ALL TIMES, AND WHERE REQUIRED FOR THE PROPER EXECUTION OF THE WORK, SHALL BE RELOCATED AS DIRECTED BY THE ENGINEER. EXTREME CAUTION SHOULD BE USED BY THE CONTRACTOR WHEN EXCAVATING OR DRILLING PIERS AROUND OR NEAR UTILITIES. CONTRACTOR SHALL PROVIDE SAFETY TRAINING FOR THE WORKING CREW. THIS SHALL INCLUDE BUT NOT BE LIMITED TO A) FALL PROTECTION, B) CONFINED SPACE, C) ELECTRICAL SAFETY, AND D) TRENCHING & EXCAVATION.
23. ALL EXISTING INACTIVE SEWER, WATER, GAS, ELECTRIC, AND OTHER UTILITIES, WHICH INTERFERE WITH THE EXECUTION OF THE WORK, SHALL BE REMOVED, CAPPED, PLUGGED OR OTHERWISE DISCONNECTED AT POINTS WHICH WILL NOT INTERFERE WITH THE EXECUTION OF THE WORK, AS DIRECTED BY THE RESPONSIBLE ENGINEER, AND SUBJECT TO THE APPROVAL OF THE OWNER AND/OR LOCAL UTILITIES.
24. THE AREAS OF THE OWNER'S PROPERTY DISTURBED BY THE WORK AND NOT COVERED BY THE TOWER, EQUIPMENT OR DRIVEWAY, SHALL BE GRADED TO A UNIFORM SLOPE, AND STABILIZED TO PREVENT EROSION.
25. CONTRACTOR SHALL MINIMIZE DISTURBANCE TO THE EXISTING SITE DURING CONSTRUCTION. EROSION CONTROL MEASURES, IF REQUIRED DURING CONSTRUCTION, SHALL BE IN CONFORMANCE WITH THE FEDERAL AND LOCAL JURISDICTION FOR EROSION AND SEDIMENT CONTROL.
26. NO FILL OR EMBANKMENT MATERIAL SHALL BE PLACED ON FROZEN GROUNDING. FROZEN MATERIALS, SNOW OR ICE SHALL NOT BE PLACED IN ANY FILL OR EMBANKMENT.
27. THE SUBGRADE SHALL BE BROUGHT TO A SMOOTH UNIFORM GRADE AND COMPACTED TO 95 PERCENT STANDARD PROCTOR DENSITY UNDER PAVEMENT AND STRUCTURES AND 80 PERCENT STANDARD PROCTOR DENSITY IN OPEN SPACE. ALL TRENCHES IN PUBLIC RIGHT OF WAY SHALL BE BACKFILLED WITH FLOWABLE FILL OR OTHER MATERIAL PRE–APPROVED BY THE LOCAL JURISDICTION.
28. ALL NECESSARY RUBBISH, STUMPS, DEBRIS, STICKS, STONES, AND OTHER REFUSE SHALL BE REMOVED FROM THE SITE AND DISPOSED OF IN A LAWFUL MANNER.
29. ALL BROCHURES, OPERATING AND MAINTENANCE MANUALS, CATALOGS, SHOP DRAWINGS, AND OTHER DOCUMENTS SHALL BE TURNED OVER TO THE GENERAL CONTRACTOR AT COMPLETION OF CONSTRUCTION AND PRIOR TO PAYMENT.
30. CONTRACTOR SHALL SUBMIT A COMPLETE SET OF AS–BUILT REDLINES TO THE GENERAL CONTRACTOR UPON COMPLETION OF PROJECT AND PRIOR TO FINAL PAYMENT.
31. CONTRACTOR SHALL LEAVE PREMISES IN A CLEAN CONDITION.
32. THE PROPOSED FACILITY WILL BE UNMANNED AND DOES NOT REQUIRE POTABLE WATER OR SEWER SERVICE, AND IS NOT FOR HUMAN HABITAT (NO HANDICAP ACCESS REQUIRED).
33. OCCUPANCY IS LIMITED TO PERIODIC MAINTENANCE AND INSPECTION, APPROXIMATELY 2 TIMES PER MONTH, BY AT&T TECHNICIANS.
34. NO OUTDOOR STORAGE OR SOLID WASTE CONTAINERS ARE PROPOSED.
35. ALL MATERIAL SHALL BE FURNISHED AND WORK SHALL BE PERFORMED IN ACCORDANCE WITH THE LATEST REVISION AT&T MOBILITY GROUNDING STANDARD "TECHNICAL SPECIFICATION FOR CONSTRUCTION OF GSM/GPRS WIRELESS SITES" AND "TECHNICAL SPECIFICATION FOR FACILITY GROUNDING". IN CASE OF A CONFLICT BETWEEN THE CONSTRUCTION SPECIFICATION AND THE DRAWINGS, THE DRAWINGS SHALL GOVERN.
36. CONTRACTORS SHALL BE RESPONSIBLE FOR OBTAINING ALL PERMITS AND INSPECTIONS REQUIRED FOR CONSTRUCTION. IF CONTRACTOR CANNOT OBTAIN A PERMIT, THEY MUST NOTIFY THE GENERAL CONTRACTOR IMMEDIATELY.
37. CONTRACTOR SHALL REMOVE ALL TRASH AND DEBRIS FROM THE SITE ON A DAILY BASIS.
38. INFORMATION SHOWN ON THESE DRAWINGS WAS OBTAINED FROM SITE VISITS AND/OR DRAWINGS PROVIDED BY THE SITE OWNER. CONTRACTORS SHALL NOTIFY THE ENGINEER OF ANY DISCREPANCIES PRIOR TO ORDERING MATERIAL OR PROCEEDING WITH CONSTRUCTION.
39. NO WHITE STROBE LIGHTS ARE PERMITTED. LIGHTING IF REQUIRED, WILL MEET FAA STANDARDS AND REQUIREMENTS.

ANTENNA MOUNTING

40. DESIGN AND CONSTRUCTION OF ANTENNA SUPPORTS SHALL CONFORM TO CURRENT ANSI/TIA–222 OR APPLICABLE LOCAL CODES.
41. ALL STEEL MATERIALS SHALL BE GALVANIZED AFTER FABRICATION IN ACCORDANCE WITH ASTM A123 "ZINC (HOT–DIP GALVANIZED) COATINGS ON IRON AND STEEL PRODUCTS", UNLESS NOTED OTHERWISE.
42. ALL BOLTS, ANCHORS AND MISCELLANEOUS HARDWARE SHALL BE GALVANIZED IN ACCORDANCE WITH ASTM A153 "ZINC–COATING (HOT–DIP) ON IRON AND STEEL HARDWARE", UNLESS NOTED OTHERWISE.
43. DAMAGED GALVANIZED SURFACES SHALL BE REPAIRED BY COLD GALVANIZING IN ACCORDANCE WITH ASTM A780.
44. ALL ANTENNA MOUNTS SHALL BE INSTALLED WITH LOCK NUTS, DOUBLE NUTS AND SHALL BE TORQUED TO MANUFACTURER'S RECOMMENDATIONS.
45. CONTRACTOR SHALL INSTALL ANTENNA PER MANUFACTURER'S RECOMMENDATION FOR INSTALLATION AND GROUNDING.
46. ALL UNUSED PORTS ON ANY ANTENNAS SHALL BE TERMINATED WITH A 50–OHM LOAD TO ENSURE ANTENNAS PERFORM AS DESIGNED.
47. PRIOR TO SETTING ANTENNA AZIMUTHS AND DOWNTILTS, ANTENNA CONTRACTOR SHALL CHECK THE ANTENNA MOUNT FOR TIGHTNESS AND ENSURE THAT THEY ARE PLUMB. ANTENNA AZIMUTHS SHALL BE SET FROM TRUE NORTH AND BE ORIENTED WITHIN +/– 5% AS DEFINED BY THE RFDS. ANTENNA DOWNTILTS SHALL BE WITHIN +/– 0.5% AS DEFINED BY THE RFDS. REFER TO ND–00246.
48. JUMPERS FROM THE TMA'S MUST TERMINATE TO OPPOSITE POLARIZATION'S IN EACH SECTOR.
49. CONTRACTOR SHALL RECORD THE SERIAL #, SECTOR, AND POSITION OF EACH ACTUATOR INSTALLED AT THE ANTENNAS AND PROVIDE THE INFORMATION TO AT&T.
50. TMA'S SHALL BE MOUNTED ON PIPE DIRECTLY BEHIND ANTENNAS AS CLOSE TO ANTENNA AS FEASIBLE IN A VERTICAL POSITION.

TORQUE REQUIREMENTS

51. ALL RF CONNECTIONS SHALL BE TIGHTENED BY A TORQUE WRENCH.
52. ALL RF CONNECTIONS, GROUNDING HARDWARE AND ANTENNA HARDWARE SHALL HAVE A TORQUE MARK INSTALLED IN A CONTINUOUS STRAIGHT LINE FROM BOTH SIDES OF THE CONNECTION.
    A. RF CONNECTION BOTH SIDES OF THE CONNECTOR.
    B. GROUNDING AND ANTENNA HARDWARE ON THE NUT SIDE STARTING FROM THE THREADS TO THE SOLID SURFACE. EXAMPLE OF SOLID SURFACE: GROUND BAR, ANTENNA BRACKET METAL.

FIBER & POWER CABLE MOUNTING

53. THE FIBER OPTIC TRUNK CABLES SHALL BE INSTALLED INTO CONDUITS, CHANNEL CABLE TRAYS, OR CABLE TRAY. WHEN INSTALLING FIBER OPTIC TRUNK CABLES INTO A CABLE TRAY SYSTEM, THEY SHALL BE INSTALLED INTO AN INTER DUCT AND A PARTITION BARRIER SHALL BE INSTALLED BETWEEN THE 600 VOLT CABLES AND THE INTER DUCT IN ORDER TO SEGREGATE CABLE TYPES. OPTIC FIBER TRUNK CABLES SHALL HAVE APPROVED CABLE RESTRAINTS EVERY (60) SIXTY FEET AND SECURELY FASTENED TO THE CABLE TRAY SYSTEM. NFPA 70 (NEC) ARTICLE 770 RULES SHALL APPLY.
54. THE TYPE TC–ER CABLES SHALL BE INSTALLED INTO CONDUITS, CHANNEL CABLE TRAYS, OR CABLE TRAY AND SHALL BE SECURED AT INTERVALS NOT EXCEEDING (6) SIX FEET. AN EXCEPTION; WHERE TYPE TC–ER CABLES ARE NOT SUBJECT TO PHYSICAL DAMAGE, CABLES SHALL BE PERMITTED TO MAKE A TRANSITION BETWEEN CONDUITS, CHANNEL CABLE TRAYS, OR CABLE TRAY WHICH ARE SERVING UTILIZATION EQUIPMENT OR DEVICES, A DISTANCE (6) SIX FEET SHALL NOT BE EXCEEDED WITHOUT CONTINUOUS SUPPORTING. NFPA 70 (NEC) ARTICLES 336 AND 392 RULES SHALL APPLY.
55. WHEN INSTALLING OPTIC FIBER TRUNK CABLES OR TYPE TC–ER CABLES INTO CONDUITS, NFPA 70 (NEC) ARTICLE 300 RULES SHALL APPLY.

56–61 RESERVED FOR ADDITIONAL NOTES.

COAXIAL CABLE NOTES

62. TYPES AND SIZES OF THE ANTENNA CABLE ARE BASED ON ESTIMATED LENGTHS. PRIOR TO ORDERING CABLE, CONTRACTOR SHALL VERIFY ACTUAL LENGTH BASED ON CONSTRUCTION LAYOUT AND NOTIFY THE PROJECT MANAGER IF ACTUAL LENGTHS EXCEED ESTIMATED LENGTHS.
63. CONTRACTOR SHALL VERIFY THE DOWN–TILT OF EACH ANTENNA WITH A DIGITAL LEVEL.
64. CONTRACTOR SHALL CONFIRM COAX COLOR CODING PRIOR TO CONSTRUCTION.
65. ALL JUMPERS TO THE ANTENNAS FROM THE MAIN TRANSMISSION LINE SHALL BE 1/2" DIA. LDF AND SHALL NOT EXCEED 6'–0".
66. ALL COAXIAL CABLE SHALL BE SECURED TO THE DESIGNED SUPPORT STRUCTURE, IN AN APPROVED MANNER, AT DISTANCES NOT TO EXCEED 4'–0" OC.
67. CONTRACTOR SHALL FOLLOW ALL MANUFACTURER'S RECOMMENDATIONS REGARDING BOTH THE INSTALLATION AND GROUNDING OF ALL COAXIAL CABLES, CONNECTORS, ANTENNAS, AND ALL OTHER EQUIPMENT.
68. CONTRACTOR SHALL GROUND ALL EQUIPMENT. INCLUDING ANTENNAS, RET MOTORS, TMA'S, COAX CABLES, AND RET CONTROL CABLES AS A COMPLETE SYSTEM. GROUNDING SHALL BE EXECUTED BY QUALIFIED WIREMEN IN COMPLIANCE WITH MANUFACTURER'S SPECIFICATION AND RECOMMENDATION.
69. CONTRACTOR SHALL PROVIDE STRAIN–RELIEF AND CABLE SUPPORTS FOR ALL CABLE ASSEMBLIES, COAX CABLES, AND RET CONTROL CABLES. CABLE STRAIN–RELIEFS AND CABLE SUPPORTS SHALL BE APPROVED FOR THE PURPOSE. INSTALLATION SHALL BE IN ACCORDANCE WITH MANUFACTURER'S SPECIFICATIONS AND RECOMMENDATIONS.
70. CONTRACTOR TO VERIFY THAT EXISTING COAX HANGERS ARE STACKABLE SNAP IN HANGERS. IF EXISTING HANGERS ARE NOT STACKABLE SNAP IN HANGERS THE CONTRACTOR SHALL REPLACE EXISTING HANGERS WITH NEW SNAP IN HANGERS IF APPLICABLE.

GENERAL CABLE AND EQUIPMENT NOTES

71. CONTRACTOR SHALL BE RESPONSIBLE TO VERIFY ANTENNA, TMAS, DIPLEXERS, AND COAX CONFIGURATION, MAKE AND MODELS PRIOR TO INSTALLATION.
72. ALL CONNECTIONS FOR HANGERS, SUPPORTS, BRACING, ETC. SHALL BE INSTALLED PER TOWER MANUFACTURER'S RECOMMENDATIONS.
73. CONTRACTOR SHALL REFERENCE THE TOWER STRUCTURAL ANALYSIS/DESIGN DRAWINGS FOR DIRECTIONS ON CABLE DISTRIBUTION/ROUTING.
74. ALL OUTDOOR RF CONNECTORS/CONNECTIONS SHALL BE WEATHERPROOFED, EXCEPT THE RET CONNECTORS, USING BUTYL TAPE AFTER INSTALLATION AND FINAL CONNECTIONS ARE MADE. BUTYL TAPE SHALL HAVE A MINIMUM OF ONE–HALF TAPE WIDTH OVERLAP ON EACH TURN AND EACH LAYER SHALL BE WRAPPED THREE TIMES. WEATHERPROOFING SHALL BE SMOOTH WITHOUT BUCKLING. BUTYL BLEEDING IS NOT ALLOWED.
75. IF REQUIRED TO PAINT ANTENNAS AND/OR COAX:
    A. PROPOSED ANTENNAS AND MOUNTING PIPES INSTALLED ON THE EXTERIOR OF THE WATER TOWER SHALL BE SHOP PAINTED TO MATCH THE COLOR OF THE WATER TOWER (VERIFY COLOR)
    B. ALL EXPOSED JUMPERS, COAX, DC POWER CABLES AND OTHER CABLES ARE TO BE PROVIDED WITH MANUFACTURED WHITE JACKETING OR TAPED WHITE
    C. FOR REGULATED TOWERS, FAA/FCC APPROVED PAINT IS REQUIRED.
    D. DO NOT PAINT OVER COLOR CODING OR ON EQUIPMENT MODEL NUMBERS.
76. ALL CABLES SHALL BE GROUNDED WITH COAXIAL CABLE GROUND KITS. FOLLOW THE MANUFACTURER'S RECOMMENDATIONS.
    A. GROUNDING AT THE ANTENNA LEVEL.
    B. GROUNDING AT MID LEVEL, TOWERS WHICH ARE OVER 200'–0", ADDITIONAL CABLE GROUNDING REQUIRED.
    C. GROUNDING AT BASE OF TOWER PRIOR TO TURNING HORIZONTAL.
    D. GROUNDING OUTSIDE THE EQUIPMENT SHELTER AT ENTRY PORT.
    E. GROUNDING INSIDE THE EQUIPMENT SHELTER AT THE ENTRY PORT.
77. ALL PROPOSED GROUND BAR DOWNLEADS ARE TO BE TERMINATED TO THE EXISTING ADJACENT GROUND BAR DOWNLEADS A MINIMUM DISTANCE OF 4'–0" BELOW GROUND BAR. TERMINATIONS MAY BE EXOTHERMIC OR COMPRESSION.

ZONUM ELECTRIC
03/19/2021
RAMON B. YACE
REDLINE

AT&T
930 NATIONAL PARKWAY
SCHAUMBURG, IL 60173

SAC WIRELESS
540 W. MADISON ST.
9TH FLOOR
CHICAGO, IL 60661
www.sacw.com
312.895.4977

A&E
SAC WIRELESS
540 W. MADISON ST.
9TH FLOOR
CHICAGO, IL 60661
www.sacw.com
312.895.4977

LTE 4C/5C/BWE RRU SWAP
10080074
O'CONNEL WT
509 O'CONNEL STREET
WATERTOWN, WI 53094

REVISIONS

REV.	DATE	DESCRIPTION	INITIALS
4	02/25/21	FOR CONSTRUCTION	BM
3	02/02/21	FOR CONSTRUCTION	BM
2	02/20/20	FOR CONSTRUCTION	AR
1	10/18/19	FOR CONSTRUCTION	BM

NOT FOR CONSTRUCTION UNLESS LABELED AS FOR CONSTRUCTION

WISCONSIN
NESTOR POPOWYCH
A-3317
CHICAGO, IL
ARCHITECT
DATE: 02/25/21
"I HEREBY CERTIFY THAT THESE PLANS WERE PREPARED BY ME OR UNDER MY DIRECT SUPERVISION AND THAT I AM A DULY REGISTERED ARCHITECT UNDER THE LAWS OF THE STATE OF WISCONSIN"

SHEET TITLE
NOTES & SPECIFICATIONS

SHEET NUMBER
SP1

Docusign Envelope ID: 9592B495-B7EC-4653-87F2-7B6B027BF5B1

THE INFORMATION CONTAINED IN THIS SET OF CONSTRUCTION DOCUMENTS IS PROPRIETARY BY NATURE. ANY USE OR DISCLOSURE OTHER THAN THAT WHICH RELATES TO CARRIER SERVICES IS STRICTLY PROHIBITED.

SECTION 09 97 15
COATING SYSTEMS FOR TELECOMMUNICATION EQUIPMENT

PART 1 GENERAL

1.1 SUMMARY

A. SECTION INCLUDES PAINTING AND PAINTING REPAIR WORK ASSOCIATED WITH THE INSTALLATION OF ANTENNAS, COAXIAL
CABLES, AND OTHER COMMON COMPONENTS WITH DIRECT ATTACHMENT TO WATER TANK FACILITIES.

1.2 REFERENCES

A. SOCIETY FOR PROTECTIVE COATINGS (SSPC): WWW.SSPC.ORG
1. VOLUME 1: GOOD PAINTING PRACTICE
2. VOLUME 2: SYSTEMS AND SPECIFICATIONS

1.3 SUBMITTALS

A. PRODUCT DATA: SUBMIT DATA SHEET FOR EACH COATING SYSTEM.

PART 2 PRODUCTS

2.1 MATERIALS

A. MANUFACTURERS:
1. SHERWIN WILLIAMS COMPANY WWW.SHERWIN-WILLIAMS.COM
2. TNEMEC COMPANY WWW.TNEMEC.COM
3. X-I-M PRODUCTS WWW.XIMBONDER.COM

PART 3 EXECUTION

3.1 EXAMINATION

A. VISUALLY EVALUATE SURFACE PREPARATION BY COMPARISON WITH PICTORIAL STANDARDS OF SSPC-VIS-1-89.

3.2 PREPARATION

A. REMOVE ALL SURFACE CONTAMINANTS IN ACCORDANCE WITH SSPC-SP1 SOLVENT CLEANING. DO NOT USE HYDROCARBON SOLVENTS ON SURFACES TO BE COATED WITH WATER-BASED COATINGS.
B. CLEAN AND REMOVE ALL RUST, SLAG, WELD SPLATTER, WELD SCABS, MILL SCALE, AND LOOSE PAINT.
C. PROTECT AREAS ADJACENT TO WELDING & OR GRINDING OPERATIONS TO PREVENT DAMAGE OF SURROUNDING INTACT PAINT SYSTEM.
D. FERROUS METAL: SSPC-SP6 COMMERCIAL BLAST CLEANING
E. GALVANIZED STEEL: SSPC-SP7 BRUSH OFF BLAST
F. ANTENNA COVERS, COAXIAL CABLE, NON-METALLIC SUBSTRATES AND PREVIOUSLY PAINTED SURFACES: SCARIFY TO DE-GLOSS. SSPC-SP1 WITH A NON-HYDROCARBON SOLVENT.
G. SURFACE PROFILE SHALL BE IN ACCORDANCE WITH MANUFACTURER'S PRODUCT RECOMMENDATION.
H. RE-BLAST ALL SURFACES:
1. WHERE RUSTING HAS RECURRED.
2. THAT DO NOT MEET THE REQUIREMENTS OF THESE SPECIFICATIONS.

3.3 APPLICATION

A. COATINGS SHALL BE APPLIED IN ACCORDANCE WITH MANUFACTURER'S PRINTED INSTRUCTIONS.
B. SURFACES TO BE COATED SHALL BE CLEAN, DRY, AND FREE OF AIRBORNE DUST AND CONTAMINANTS AT THE TIME OF APPLICATION AND WHILE FILM IS FORMING.
C. FINISH COAT SHALL BE UNIFORM IN COLOR AND SHEEN WITHOUT STREAKS, LAPS, RUNS, SAGS OR MISSED AREAS.
D. SHOP PAINTING: TAPE-OFF (2-INCH MINIMUM) SURFACES THAT WILL BE IN THE HEAT-AFFECTED-ZONE DURING FIELD WELDING.
E. COMPONENT PAINTING:
1. INTERIOR EXPOSED FERROUS METAL AND GALVANIZED STEEL:
a. PRODUCT: SHERWIN WILLIAMS MACROPOXY 646 OR TNEMEC SERIES 161
1) NUMBER OF COATS: 2
2) DRY FILM THICKNESS: 4.0-6.0 MILS (PER COAT)
3) COLOR: BY OWNER
2. EXTERIOR EXPOSED FERROUS METAL AND GALVANIZED STEEL:
a. PRIMER: SHERWIN WILLIAMS MACROPOXY 646 OR TNEMEC SERIES 161 OR N69
1) NUMBER OF COATS: 1
2) DRY FILM THICKNESS: 4.0-6.0 MILS
3) COLOR: BY OWNER
b. FINISH: SHERWIN WILLIAMS ACROLON 218 OR TNEMEC SERIES 10740/10750
1) NUMBER OF COATS: 1
2) DRY FILM THICKNESS: 2.0-3.0 MILS
3) COLOR: BY OWNER
3. ANTENNA COVERS:
a. PRIMER: SHERWIN WILLIAMS PRO-CRYL PRIMER
1) NUMBER OF COATS: 1
2) DRY FILM THICKNESS: 2.0-4.0 MILS
b. FINISH: SHERWIN WILLIAMS SHER-CRYL HPA
1) NUMBER OF COATS: 1
2) DRY FILM THICKNESS: 2.5-4.0 MILS
3) COLOR: BY OWNER
4. COAXIAL CABLE
a. PRIMER: X-I-M 1138
1) NUMBER OF COATS: 1
2) DRY FILM THICKNESS: 2.0-3.0 MILS
b. FINISH: SHERWIN WILLIAMS SHER-CRYL HPA
1) NUMBER OF COATS: 1
2) DRY FILM THICKNESS: 2.5-4.0 MILS
3) COLOR: BY OWNER

3.4 REPAIR OF AREAS DAMAGED BY WELDING

A. PREPARE THE DAMAGE BY ONE OF THE TWO FOLLOWING METHODS AS DIRECTED BY THE ENGINEER.
1. ABRASIVE-BLAST TO SSPC-SP6.
2. MECHANICALLY CLEAN TO SSPC-SP11.
B. FEATHER EDGES TO PROVIDE SMOOTH COATING TRANSITION.
C. APPLY PRIME COAT TO BARE METAL SURFACE.
D. MASK OFF RECTANGULAR AREA AROUND PRIME COAT.
E. APPLY FINISH COAT.

3.5 QUALITY CONTROL

A. MEASURE DRY FILM THICKNESS WITH A MAGNETIC FILM THICKNESS GAGE IN ACCORDANCE WITH SSPC-PA2.
B. VISUALLY INSPECT DRIED FILM FOR FUNS, SAGS, DRY SPRAY, OVERSPRAY, EMBEDDED PARTICLES AND MISSED AREAS.
C. REPAIR DEFECTIVE OR DAMAGED AREAS IN ACCORDANCE WITH ARTICLES 3.02 AND 3.03

NOTES:

1. ALL ATTACHMENTS TO PAINTED SURFACES ARE TO INCLUDE THE PLACEMENT OF NEOPRENE STRIPS BETWEEN HARDWARE AND POINTS OF CONTACT TO REDUCE/ELIMINATE DAMAGE TO THE PAINTED SURFACE. METAL SHIMS ARE REQUIRED IN SITUATIONS WHERE TIGHTENING A CLAMP MAY CAUSE THE NEOPRENE TO TEAR CAUSING METAL TO METAL CONTACT. WHERE POSSIBLE EXPOSED NEOPRENE SHOULD BE WRAPPED WITH WHITE TAPE. FASTENING SEQUENCE SHOULD INCLUDE NYLON WASHERS BETWEEN THE PAINTED SURFACE AND THE GALVANIZED WASHER.
2. PROPOSED ANTENNAS AND MOUNTING PIPES INSTALLED ON THE EXTERIOR OF THE WATER TOWER SHALL BE SHOP PAINTED TO MATCH THE COLOR OF THE WATER TOWER (VERIFY COLOR).
3. ANY REPLACEMENT MOUNTING PIPES ARE TO HAVE WELDED END CAPS. EXISTING PIPE MASTS ARE TO BE CAPPED AT BOTH ENDS WITH WHITE RUBBER CAPS.
4. CONTRACTOR TO TOUCH UP PAINTING ON EXISTING ANTENNAS. SPOT REPAIRS MADE WITH BRUSH AND W/O FEATHERING SHOULD BE COMPLETELY ROLLED FOR UNIFORMITY.
5. CONTRACTOR TO TOUCH UP EXISTING MOUNTING PIPES. DEPENDING UPON THEIR CONDITION (DAMAGED/FAILED), THE CITY MAY REQUEST REPLACEMENT.
6. ALL EXPOSED FIBER CABLES, POWER CABLES, JUMPERS AND OTHER CABLES ARE TO BE PROVIDED WITH MANUFACTURED WHITE JACKETING OR TAPED WHITE.
7. ALL MOUNTING HARDWARE IS TO BE GALVANIZED AND/OR PROVIDED IN A NON-CORRODING MATERIAL.
8. ALL ANTENNA FEED LINES, JUMPERS, COAX AND HYBRID CABLE CANNOT INTERFERE WITH TOP OF THE HANDRAIL AND MUST BE ROUTED AS SUCH THAT THEY COMPLY WITH OSHA REQUIREMENTS REGARDING HANDRAILS.
9. THE INSTALLATION OF NEW EQUIPMENT WILL BE PLACED BEHIND THE ANTENNAS AND IN A MANNER THAT MAINTAINS THE HANDRAIL'S COMPLIANCE WITH CURRENT OSHA GUIDELINES FOR ACCESS.
10. DRILLING HOLES IN EXISTING RAILING IS NOT ACCEPTABLE. FOR AN ANGLE IRON HANDRAIL, SEH RECOMMENDS USING VALMONT SITE PRO HMB-A MOUNTING BRACKET KIT (SEE ATTACHMENT).
11. ALL ABANDONED ANTENNAS, COAXIAL CABLE AND DETACHABLE EQUIPMENT THAT ARE NO LONGER USED ARE TO BE REMOVED DURING THE FINAL MIGRATION.
12. ALL EQUIPMENT IS TO BE IDENTIFIED BY THE TENANT.

ZONUM ELECTRIC
03/19/2021
RAMON B. YACE
REDLINE

AT&T
930 NATIONAL PARKWAY
SCHAUMBURG, IL 60173

SAC WIRELESS
540 W. MADISON ST.
9TH FLOOR
CHICAGO, IL 60661
www.sacw.com
312.895.4977

A&E
SAC WIRELESS
540 W. MADISON ST.
9TH FLOOR
CHICAGO, IL 60661
www.sacw.com
312.895.4977

LTE 4C/5C/BWE RRU SWAP
10080074
O'CONNEL WT
509 O'CONNEL STREET
WATERTOWN, WI 53094

REVISIONS

REV.	DATE	DESCRIPTION	INITIALS
4	02/25/21	FOR CONSTRUCTION	BM
3	02/02/21	FOR CONSTRUCTION	BM
2	02/20/20	FOR CONSTRUCTION	AR
1	10/18/19	FOR CONSTRUCTION	BM

NOT FOR CONSTRUCTION UNLESS LABELED AS FOR CONSTRUCTION

WISCONSIN
NESTOR POPOWYCH
A-3317
CHICAGO, IL
ARCHITECT

DATE: 02/25/21
"I HEREBY CERTIFY THAT THESE PLANS WERE PREPARED BY ME OR UNDER MY DIRECT SUPERVISION AND THAT I AM A DULY REGISTERED ARCHITECT UNDER THE LAWS OF THE STATE OF WISCONSIN"

SHEET TITLE
PAINTING NOTES

SHEET NUMBER
SP2

Docusign Envelope ID: 9592B495-B7EC-4653-87F2-7B6B027BF5B1

THE INFORMATION CONTAINED IN THIS SET OF CONSTRUCTION DOCUMENTS IS PROPRIETARY BY NATURE. ANY USE OR DISCLOSURE OTHER THAN THAT WHICH RELATES TO CARRIER SERVICES IS STRICTLY PROHIBITED.

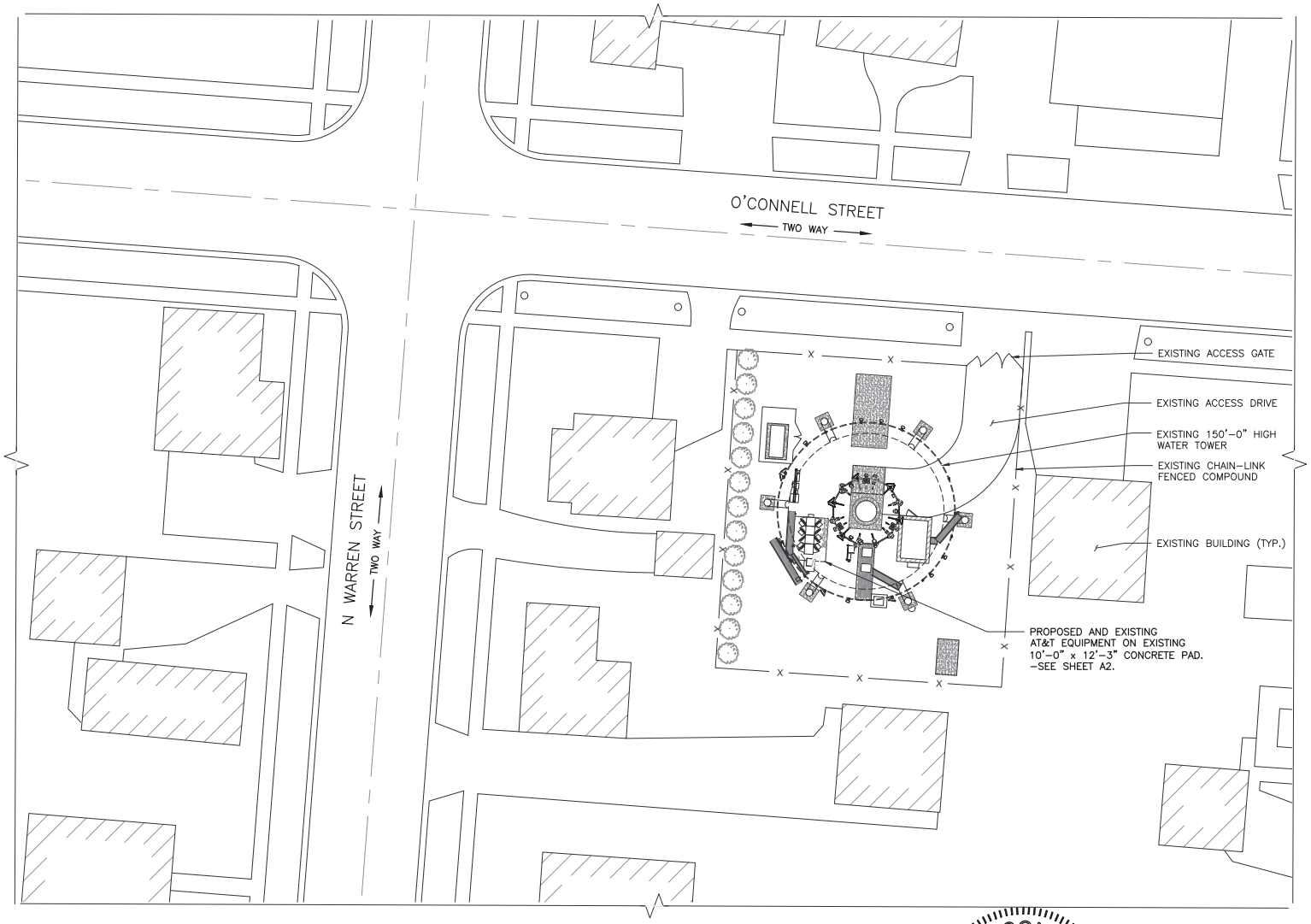

ZONUM ELECTRIC
03/19/2021
RAMON B. YACE
REDLINE

LATITUDE: 43° 11' 44.71" N
LONGITUDE: 88° 43' 49.56" W

NORTH

OVERALL SITE PLAN

30' 0 15' 30'

SCALE: 1"=30'-0" (22x34)
(OR) 1/2"=30'-0" (11x17)

1

AT&T
930 NATIONAL PARKWAY
SCHAUMBURG, IL 60173

SAC WIRELESS
540 W. MADISON ST.
9TH FLOOR
CHICAGO, IL 60661
www.sacw.com
312.895.4977

A&E
SAC WIRELESS
540 W. MADISON ST.
9TH FLOOR
CHICAGO, IL 60661
www.sacw.com
312.895.4977

LTE 4C/5C/BWE RRU SWAP
10080074
O'CONNEL WT
509 O'CONNEL STREET
WATERTOWN, WI 53094

REVISIONS

REV.	DATE	DESCRIPTION	INITIALS
4	02/25/21	FOR CONSTRUCTION	BM
3	02/02/21	FOR CONSTRUCTION	BM
2	02/20/20	FOR CONSTRUCTION	AR
1	10/18/19	FOR CONSTRUCTION	BM

NOT FOR CONSTRUCTION UNLESS LABELED AS FOR CONSTRUCTION

WISCONSIN
NESTOR POPOWYCH
A-3817
CHICAGO, IL
ARCHITECT

DATE: 02/25/21

"I HEREBY CERTIFY THAT THESE PLANS WERE PREPARED BY ME OR UNDER MY DIRECT SUPERVISION AND THAT I AM A DULY REGISTERED ARCHITECT UNDER THE LAWS OF THE STATE OF WISCONSIN"

SHEET TITLE
OVERALL SITE PLAN

SHEET NUMBER
A0

Docusign Envelope ID: 9592B495-B7EC-4653-87F2-7B6B027BF5B1

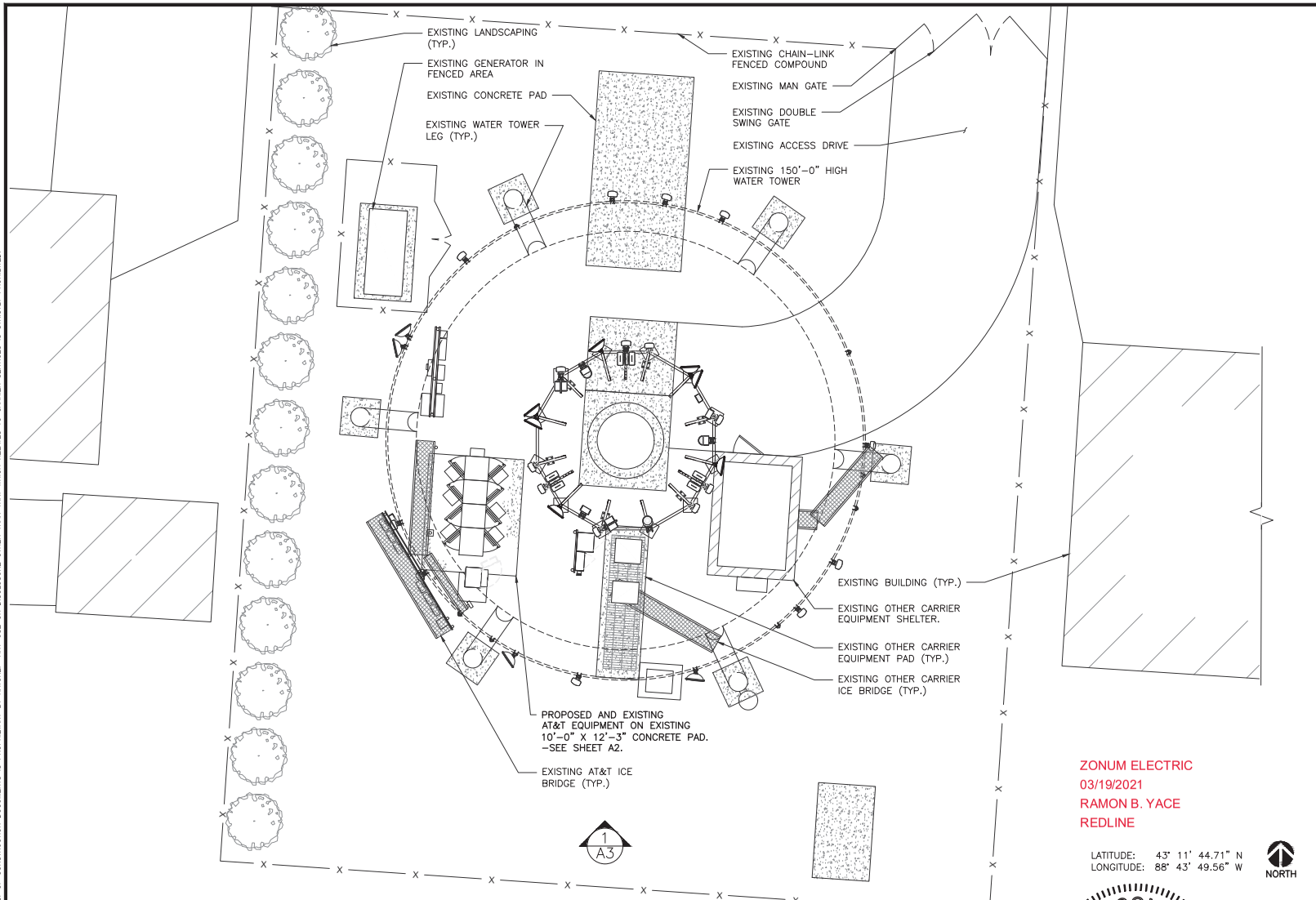

ZONUM ELECTRIC
03/19/2021
RAMON B. YACE
REDLINE

LATITUDE: 43° 11' 44.71" N
LONGITUDE: 88° 43' 49.56" W

SITE PHOTO 2 | 2

SITE PHOTO 1 | 1

COMPOUND PLAN | 3

SCALE: 3/16" = 1'-0" (24x36)
1/32" = 1'-0" (11x17)

THE INFORMATION CONTAINED IN THIS SET OF CONSTRUCTION DOCUMENTS IS PROPRIETARY BY NATURE. ANY USE OR DISCLOSURE OTHER THAN THAT WHICH RELATES TO CARRIER SERVICES IS STRICTLY PROHIBITED.

AT&T
930 NATIONAL PARKWAY
SCHAUMBURG, IL 60173

SAC WIRELESS
540 W. MADISON ST.
9TH FLOOR
CHICAGO, IL 60661
www.sacw.com
312.895.4977

A&E
SAC WIRELESS
540 W. MADISON ST.
9TH FLOOR
CHICAGO, IL 60661
www.sacw.com
312.895.4977

LTE 4C/5C/BWE RRU SWAP
10080074
O'CONNEL WT
509 O'CONNEL STREET
WATERTOWN, WI 53094

REVISIONS

REV.	DATE	DESCRIPTION	INITIALS
4	02/25/21	FOR CONSTRUCTION	BM
3	02/02/21	FOR CONSTRUCTION	BM
2	02/20/20	FOR CONSTRUCTION	AR
1	10/18/19	FOR CONSTRUCTION	BM

NOT FOR CONSTRUCTION UNLESS LABELED AS FOR CONSTRUCTION

WISCONSIN
NESTOR POPOWYCH
A-3317
CHICAGO, IL
ARCHITECT

DATE: 02/25/21

"I HEREBY CERTIFY THAT THESE PLANS WERE PREPARED BY ME OR UNDER MY DIRECT SUPERVISION AND THAT I AM A DULY REGISTERED ARCHITECT UNDER THE LAWS OF THE STATE OF WISCONSIN"

SHEET TITLE
COMPOUND PLAN

SHEET NUMBER
A1

Docusign Envelope ID: 9592B495-B7EC-4653-87F2-7B6B027BF5B1

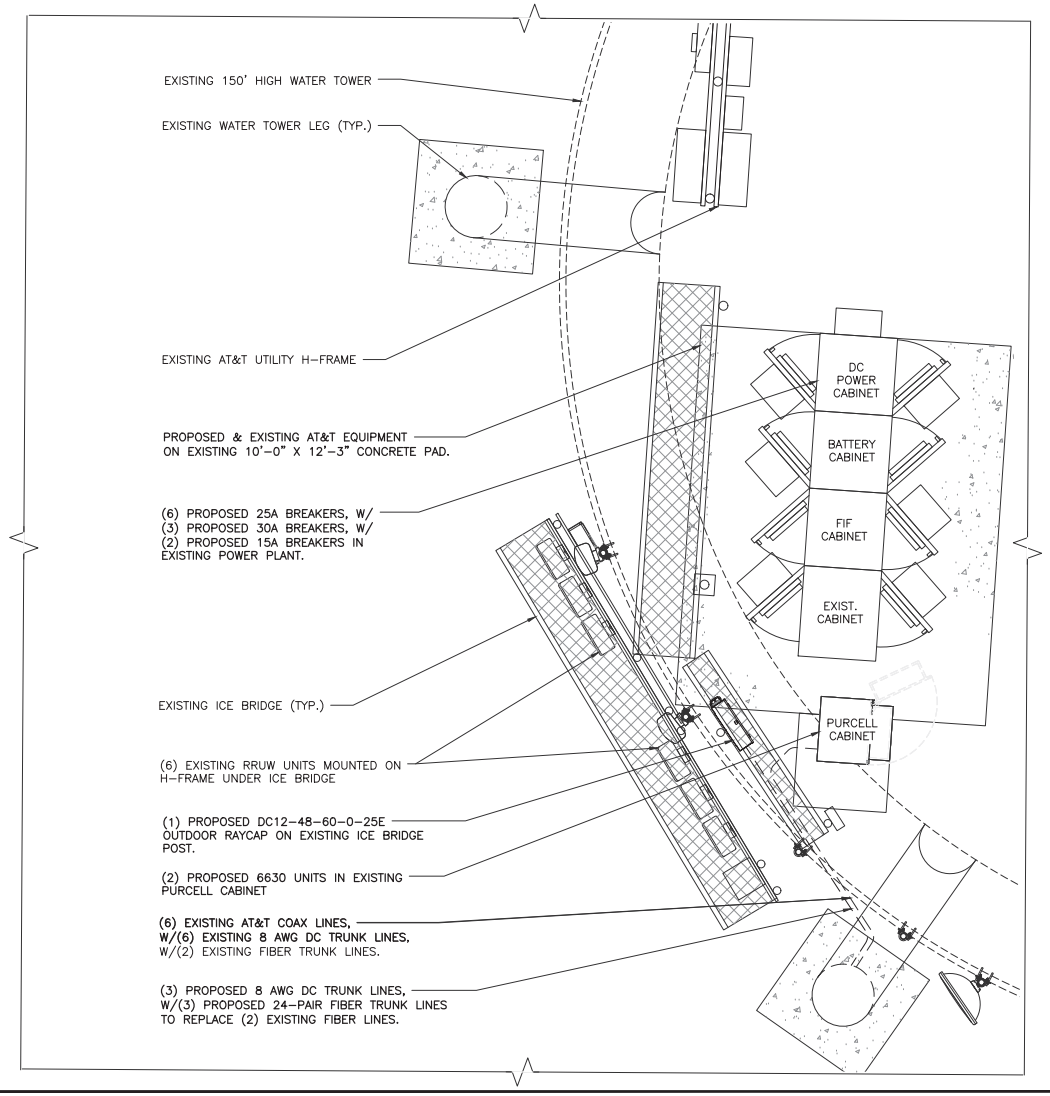

LTE 4C (FNET) GROUND SCOPE:
- INSTALL (3) PROPOSED 25A BREAKERS IN EXISTING POWER PLANT.
- INSTALL (1) PROPOSED 15A BREAKER IN EXISTING POWER PLANT.
- INSTALL (1) PROPOSED 6630 UNIT IN EXISTING PURCELL CABINET.
- INSTALL (1) PROPOSED IDLE CABLE.
- INSTALL (3) PROPOSED ALARM CABLES.
- INSTALL (1) PROPOSED DC12-48-60-0-25E OUTDOOR RAYCAP ON EXISTING ICE BRIDGE POST.

LTE 5C GROUND SCOPE:
- INSTALL (3) PROPOSED 25A BREAKERS IN EXISTING POWER PLANT.
- INSTALL (1) PROPOSED 15A BREAKER IN EXISTING POWER PLANT.
- INSTALL (1) PROPOSED 6630 UNIT IN EXISTING PURCELL CABINET.

BWE RRU SWAP GROUND SCOPE:
- INSTALL (3) PROPOSED 30A BREAKERS IN EXISTING POWER PLANT.

ZONUM ELECTRIC
03/19/2021
RAMON B. YACE
REDLINE
LATITUDE: 43° 11' 44.71" N
LONGITUDE: 88° 43' 49.56" W

NORTH

EQUIPMENT PLAN

0 6" 1' 2'
SCALE: 1/2" = 1'-0" (24x36)
(OR) 1/4" = 1'-0" (11x17)

1

AT&T
930 NATIONAL PARKWAY
SCHAUMBURG, IL 60173

SAC WIRELESS
540 W. MADISON ST.
9TH FLOOR
CHICAGO, IL 60661
www.sacw.com
312.895.4977

A&E
SAC WIRELESS
540 W. MADISON ST.
9TH FLOOR
CHICAGO, IL 60661
www.sacw.com
312.895.4977

LTE 4C/5C/BWE RRU SWAP
10080074
O'CONNEL WT
509 O'CONNEL STREET
WATERTOWN, WI 53094

REVISIONS

REV.	DATE	DESCRIPTION	INITIALS
4	02/25/21	FOR CONSTRUCTION	BM
3	02/02/21	FOR CONSTRUCTION	BM
2	02/20/20	FOR CONSTRUCTION	AR
1	10/18/19	FOR CONSTRUCTION	BM

NOT FOR CONSTRUCTION UNLESS LABELED AS FOR CONSTRUCTION

WISCONSIN
NESTOR POPOWYCH
A-3837
CHICAGO, IL
ARCHITECT
DATE: 02/25/21
"I HEREBY CERTIFY THAT THESE PLANS WERE PREPARED BY ME OR UNDER MY DIRECT SUPERVISION AND THAT I AM A DULY REGISTERED ARCHITECT UNDER THE LAWS OF THE STATE OF WISCONSIN"

SHEET TITLE
EQUIPMENT PLAN

SHEET NUMBER
A2

THE INFORMATION CONTAINED IN THIS SET OF CONSTRUCTION DOCUMENTS IS PROPRIETARY BY NATURE. ANY USE OR DISCLOSURE OTHER THAN THAT WHICH RELATES TO CARRIER SERVICES IS STRICTLY PROHIBITED.

Docusign Envelope ID: 9592B495-B7EC-4653-87F2-7B6B027BF5B1

THE INFORMATION CONTAINED IN THIS SET OF CONSTRUCTION DOCUMENTS IS PROPRIETARY BY NATURE. ANY USE OR DISCLOSURE OTHER THAN THAT WHICH RELATES TO CARRIER SERVICES IS STRICTLY PROHIBITED.

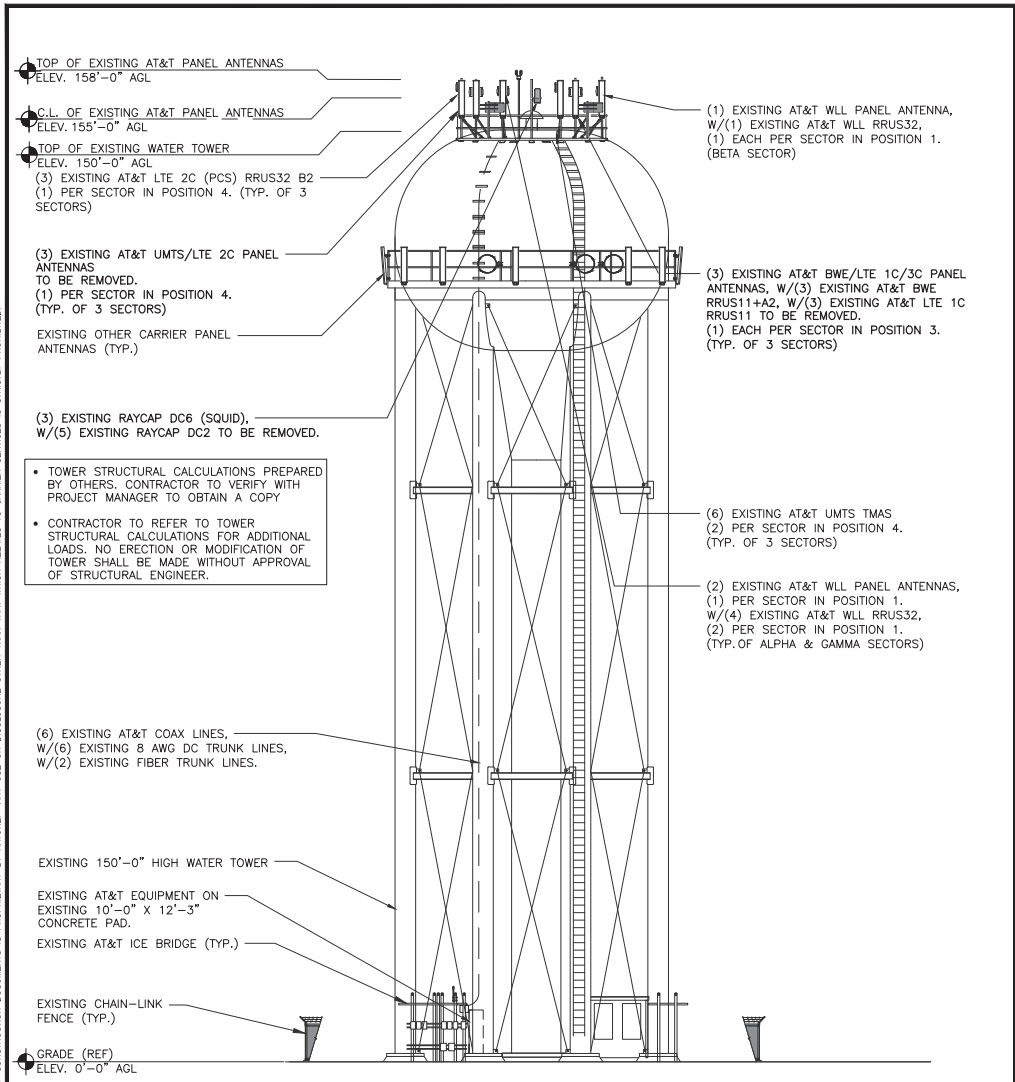

- TOWER STRUCTURAL CALCULATIONS PREPARED BY OTHERS. CONTRACTOR TO VERIFY WITH PROJECT MANAGER TO OBTAIN A COPY
- CONTRACTOR TO REFER TO TOWER STRUCTURAL CALCULATIONS FOR ADDITIONAL LOADS. NO ERECTION OR MODIFICATION OF TOWER SHALL BE MADE WITHOUT APPROVAL OF STRUCTURAL ENGINEER.

EXISTING TOWER ELEVATION

0 2' 4' 8'

SCALE: 1/8" = 1'-0" (24x36)
(OR) 1/16" = 1'-0" (11x17)

2

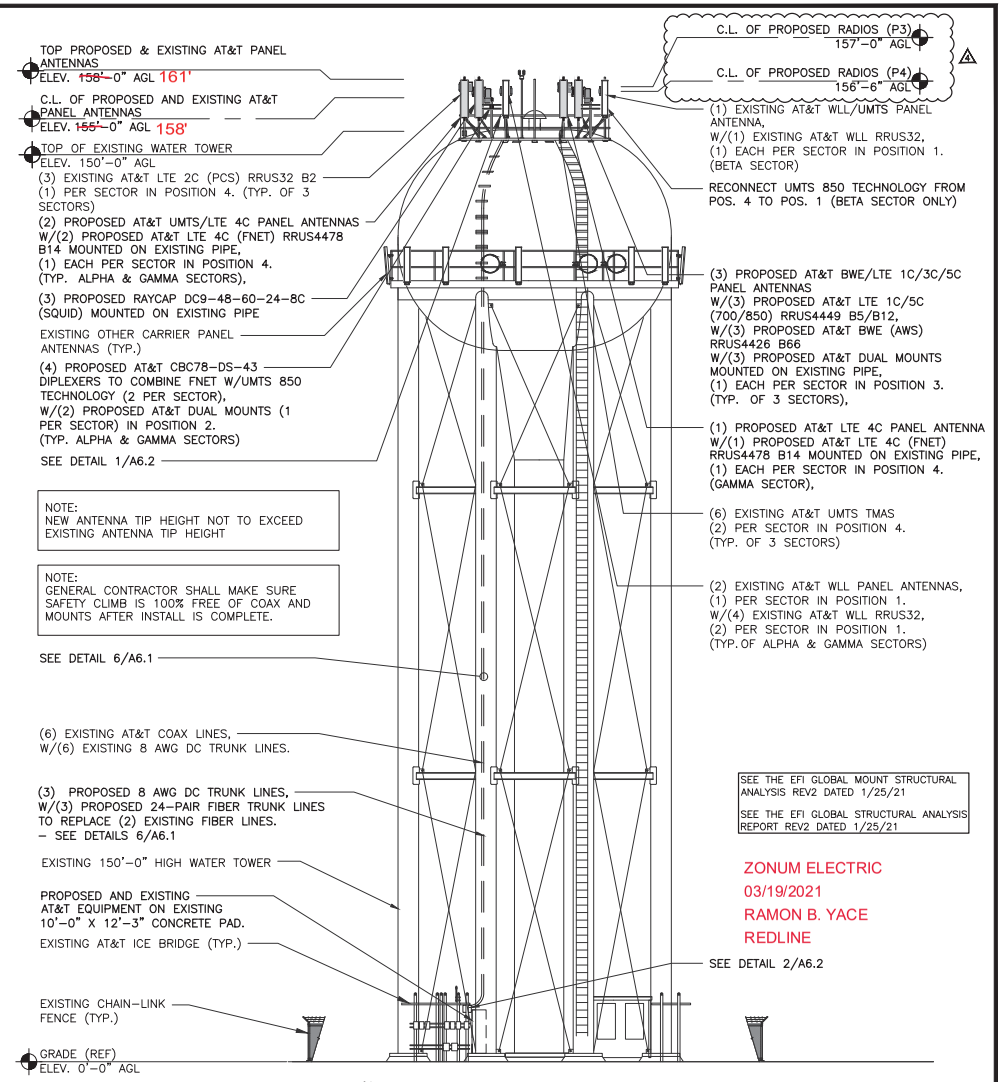

NOTE:
NEW ANTENNA TIP HEIGHT NOT TO EXCEED EXISTING ANTENNA TIP HEIGHT

NOTE:
GENERAL CONTRACTOR SHALL MAKE SURE SAFETY CLIMB IS 100% FREE OF COAX AND MOUNTS AFTER INSTALL IS COMPLETE.

SEE THE EFI GLOBAL MOUNT STRUCTURAL ANALYSIS REV2 DATED 1/25/21

SEE THE EFI GLOBAL STRUCTURAL ANALYSIS REPORT REV2 DATED 1/25/21

ZONUM ELECTRIC
03/19/2021
RAMON B. YACE
REDLINE

PROPOSED TOWER ELEVATION

20' 0 10' 20'

SCALE: 1" = 20'-0" (24x36)
(OR) 1/2" = 20'-0" (11x17)

1

AT&T
930 NATIONAL PARKWAY
SCHAUMBURG, IL 60173

SAC WIRELESS
540 W. MADISON ST.
9TH FLOOR
CHICAGO, IL 60661
www.sacw.com
312.895.4977

A&E
SAC WIRELESS
540 W. MADISON ST.
9TH FLOOR
CHICAGO, IL 60661
www.sacw.com
312.895.4977

LTE 4C/5C/BWE RRU SWAP
10080074
O'CONNEL WT
509 O'CONNEL STREET
WATERTOWN, WI 53094

REVISIONS

REV.	DATE	DESCRIPTION	INITIALS
4	02/25/21	FOR CONSTRUCTION	BM
3	02/02/21	FOR CONSTRUCTION	BM
2	02/20/20	FOR CONSTRUCTION	AR
1	10/18/19	FOR CONSTRUCTION	BM

NOT FOR CONSTRUCTION UNLESS LABELED AS FOR CONSTRUCTION

WISCONSIN
NESTOR POPOWYCH
A-3317
CHICAGO, IL
ARCHITECT
DATE: 02/25/21
"I HEREBY CERTIFY THAT THESE PLANS WERE PREPARED BY ME OR UNDER MY DIRECT SUPERVISION AND THAT I AM A DULY REGISTERED ARCHITECT UNDER THE LAWS OF THE STATE OF WISCONSIN"

SHEET TITLE
TOWER ELEVATION

SHEET NUMBER
A3

Docusign Envelope ID: 9592B495-B7EC-4653-87F2-7B6B027BF5B1

THE INFORMATION CONTAINED IN THIS SET OF CONSTRUCTION DOCUMENTS IS PROPRIETARY BY NATURE. ANY USE OR DISCLOSURE OTHER THAN THAT WHICH RELATES TO CARRIER SERVICES IS STRICTLY PROHIBITED.

USE STEEL BANDING TO SECURE COMBINERS TO PIPE

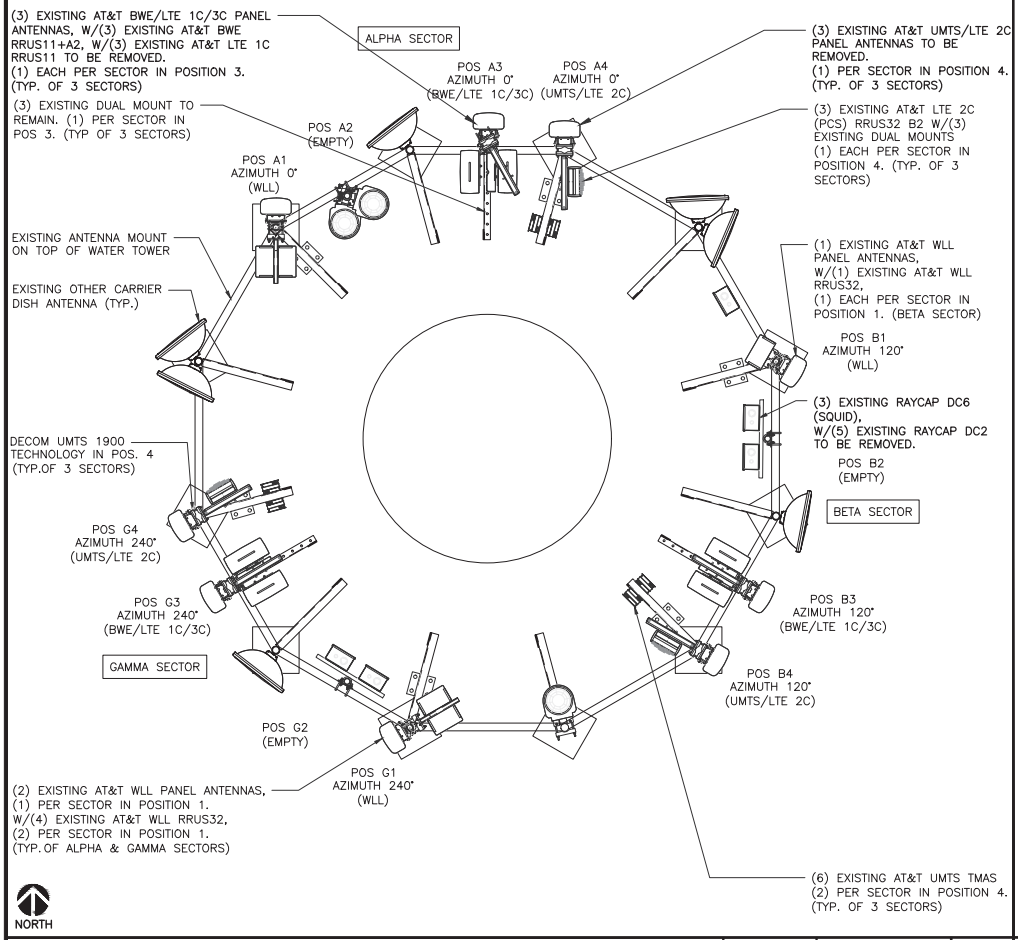

EXISTING ANTENNA PLAN

0 6" 1' 2'

SCALE: 1/2" = 1'-0" (24x36)
(OR) 1/4" = 1'-0" (11x17)

2

SEE THE EFI GLOBAL MOUNT STRUCTURAL ANALYSIS REV2 DATED 1/25/21

SEE THE EFI GLOBAL STRUCTURAL ANALYSIS REPORT REV2 DATED 1/25/21

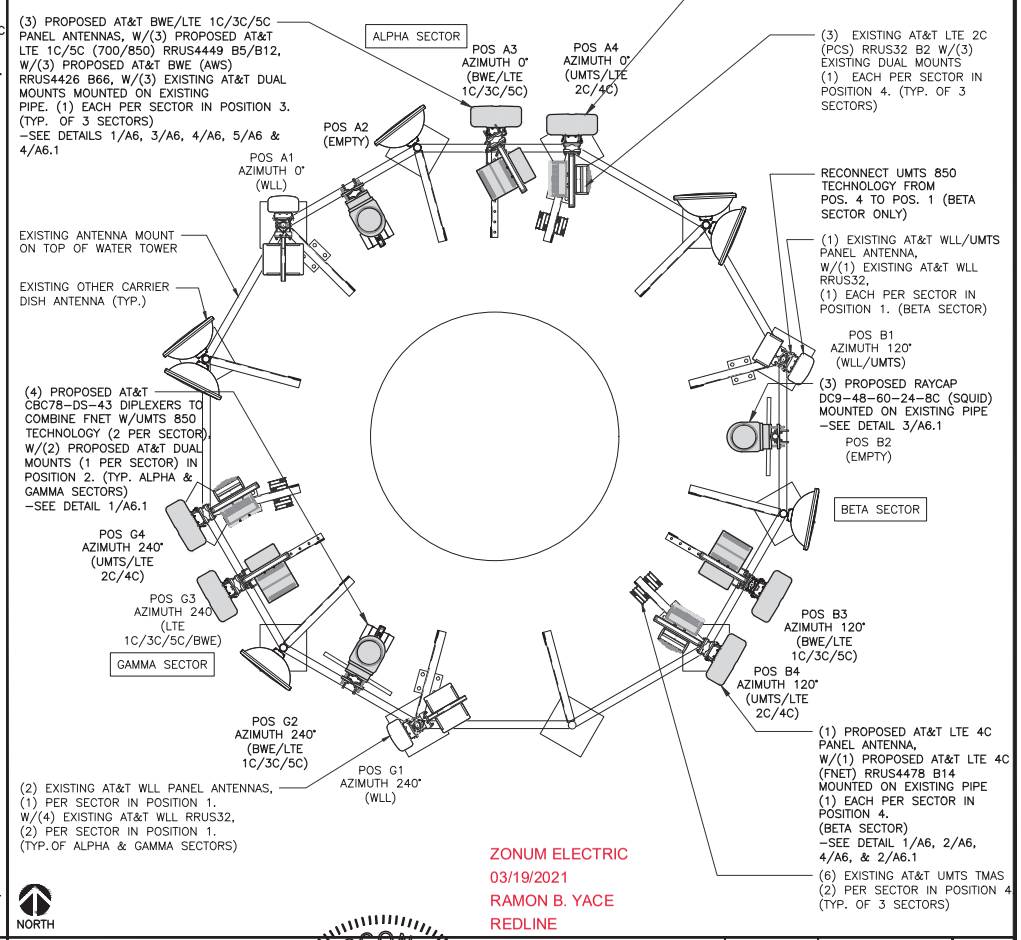

ZONUM ELECTRIC
03/19/2021
RAMON B. YACE
REDLINE

PROPOSED ANTENNA PLAN

0 6" 1' 2'

SCALE: 1/2" = 1'-0" (24x36)
(OR) 1/4" = 1'-0" (11x17)

1

AT&T
930 NATIONAL PARKWAY
SCHAUMBURG, IL 60173

SAC WIRELESS
540 W. MADISON ST.
9TH FLOOR
CHICAGO, IL 60661
www.sacw.com
312.895.4977

A&E
SAC WIRELESS
540 W. MADISON ST.
9TH FLOOR
CHICAGO, IL 60661
www.sacw.com
312.895.4977

LTE 4C/5C/BWE RRU SWAP
10080074
O'CONNEL WT
509 O'CONNEL STREET
WATERTOWN, WI 53094

REVISIONS

REV.	DATE	DESCRIPTION	INITIALS
4	02/25/21	FOR CONSTRUCTION	BM
3	02/02/21	FOR CONSTRUCTION	BM
2	02/20/20	FOR CONSTRUCTION	AR
1	10/18/19	FOR CONSTRUCTION	BM

NOT FOR CONSTRUCTION UNLESS LABELED AS FOR CONSTRUCTION

WISCONSIN NESTOR POPOWYCH A-3317 CHICAGO, IL ARCHITECT

DATE: 02/25/21

"I HEREBY CERTIFY THAT THESE PLANS WERE PREPARED BY ME OR UNDER MY DIRECT SUPERVISION AND THAT I AM A DULY REGISTERED ARCHITECT UNDER THE LAWS OF THE STATE OF WISCONSIN"

SHEET TITLE
ANTENNA PLAN

SHEET NUMBER
A4

Docusign Envelope ID: 9592B495-B7EC-4653-87F2-7B6B027BF5B1

1. CONTRACTOR IS TO REFER TO AT&T'S MOST CURRENT RADIO FREQUENCY DATA SHEET (RFDS) PRIOR TO CONSTRUCTION.
2. THE SIZE, HEIGHT, AND DIRECTION OF THE ANTENNAS SHALL BE ADJUSTED TO ACHIEVE THE AZIMUTHS SPECIFIED AND LIMIT SHADOWING AND TO MEET THE SYSTEM REQUIREMENTS.
3. CONTRACTOR SHALL VERIFY THE HEIGHT OF THE ANTENNA WITH THE AT&T WIRELESS PROJECT MANAGER.
4. VERIFY TYPE AND SIZE OF TOWER LEG PRIOR TO ORDERING ANY ANTENNA MOUNT.
5. UNLESS NOTED OTHERWISE THE CONTRACTOR MUST PROVIDE ALL MATERIAL NECESSARY.
6. ANTENNA AZIMUTHS ARE DEGREES OFF OF TRUE NORTH, BEARING CLOCKWISE, IN WHICH ANTENNA FACE IS DIRECTED. ALL ANTENNAS (AND SUPPORTING STRUCTURES AS PRACTICAL) SHALL BE ACCURATELY ORIENTED IN THE SPECIFIED DIRECTION.
7. CONTRACTOR SHALL VERIFY ALL RF INFORMATION PRIOR TO CONSTRUCTION.
8. SWEEP TEST SHALL BE PERFORMED BY GENERAL CONTRACTOR AND SUBMITTED TO AT&T WIRELESS CONSTRUCTION SPECIALIST. TEST SHALL BE PERFORMED PER AT&T WIRELESS STANDARDS.
9. CABLE LENGTHS WERE DETERMINED BASED ON THE DESIGN DRAWING. CONTRACTOR TO VERIFY ACTUAL LENGTH DURING PRE–CONSTRUCTION WALK.
10. CONTRACTOR TO USE ROSENBERGER FIBER LINE HANGER COMPONENTS (OR ENGINEER APPROVED EQUAL).

ANTENNA & CABLING NOTES | NO SCALE | 6

RF, DC, & COAX CABLE MARKING LOCATIONS TABLE

NO	LOCATIONS
1	EACH TOP–JUMPER SHALL BE COLOR CODED WITH (1) SET OF 3" WIDE BANDS.
2	EACH MAIN COAX SHALL BE COLOR CODED WITH (1) SET OF 3" WIDE BANDS NEAR THE TOP–JUMPER CONNECTION AND WITH (1) SET OF 3/4" WIDE COLOR BANDS JUST PRIOR TO ENTERING THE BTS OR TRANSMITTER BUILDING.
3	CABLE ENTRY PORT ON THE INTERIOR OF THE SHELTER.
4	ALL BOTTOM JUMPERS SHALL BE COLOR CODED WITH (1) SET OF 3/4" WIDE BANDS ON EACH END OF THE BOTTOM JUMPER.
5	ALL BOTTOM JUMPERS SHALL BE COLOR CODED WITH (1) SET OF 3/4" WIDE BANDS ON EACH END OF THE BOTTOM JUMPER.

CABLE MARKING DIAGRAM | NO SCALE | 5

1. THE ANTENNA SYSTEM COAX SHALL BE LABELED WITH VINYL TAPE.
2. THE STANDARD IS BASED ON EIGHT COLORED TAPES–RED, BLUE, GREEN, YELLOW, ORANGE, BROWN, WHITE, AND VIOLET. THESE TAPES MUST BE 3/4" WIDE & UV RESISTANT SUCH AS SCOTCH 35 VINYL ELECTRICAL COLOR CODING TAPE AND SHOULD BE READILY AVAILABLE TO THE ELECTRICIAN OR CONTRACTOR ON SITE.
3. USING COLOR BANDS ON THE CABLES, MARK ALL RF CABLE BY SECTOR AND CABLE NUMBER AS SHOWN ON "CABLE COLOR CHART".
4. WHEN AN EXISTING COAXIAL LINE THAT IS INTENDED TO BE A SHARED LINE BETWEEN TECHNOLOGIES IS ENCOUNTERED, THE CONTRACTOR SHALL REMOVE THE EXISTING COLOR CODING SCHEME AND REPLACE IT WITH THE COLOR CODING STANDARD. IN THE ABSENCE OF AN EXISTING COLOR CODING AND TAGGING SCHEME, OR WHEN INSTALLING PROPOSED COAXIAL CABLES, THIS GUIDELINE SHALL BE IMPLEMENTED AT THAT SITE REGARDLESS OF TECHNOLOGY.
5. ALL COLOR CODE TAPE SHALL BE 3M–35 AND SHALL BE INSTALLED USING A MINIMUM OF (3) THREE WRAPS OF TAPE AND SHALL BE NEATLY TRIMMED AND SMOOTHED OUT SO AS TO AVOID UNRAVELING.
6. ALL COLOR BANDS INSTALLED AT THE TOP OF THE TOWER SHALL BE A MINIMUM OF 3" WIDE, AND SHALL HAVE A MINIMUM OF 3/4" OF SPACE BETWEEN EACH COLOR.
7. ALL COLOR CODES SHALL BE INSTALLED SO AS TO ALIGN NEATLY WITH ONE ANOTHER FROM SIDE–TO–SIDE.
8. IF EXISTING CABLES AT THE SITE ALREADY HAVE A COLOR CODING SCHEME AND THEY ARE NOT INTENDED TO BE REUSED OR SHARED WITH THE NEW TECHNOLOGY, THE EXISTING COLOR CODING SCHEME SHALL REMAIN UNTOUCHED.

CABLE MARKING NOTES | NO SCALE | 4

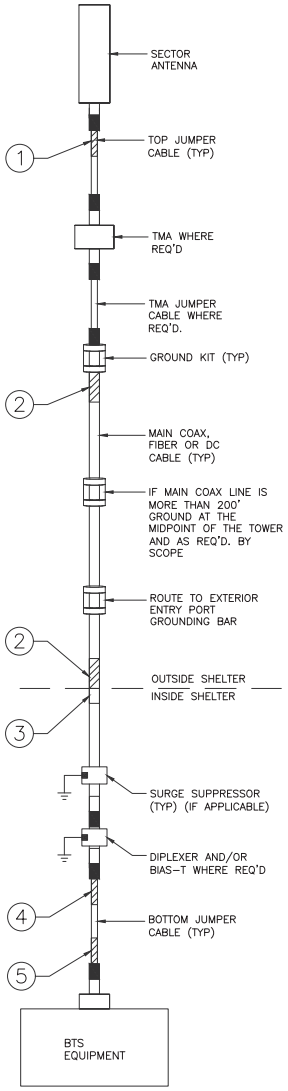

CABLE COLOR CODING DIAGRAM | NO SCALE | 3

NOT USED | NO SCALE | 2

NOT USED | NO SCALE | 1

ZONUM ELECTRIC
03/19/2021
RAMON B. YACE
REDLINE

THE INFORMATION CONTAINED IN THIS SET OF CONSTRUCTION DOCUMENTS IS PROPRIETARY BY NATURE. ANY USE OR DISCLOSURE OTHER THAN THAT WHICH RELATES TO CARRIER SERVICES IS STRICTLY PROHIBITED.

AT&T
930 NATIONAL PARKWAY
SCHAUMBURG, IL 60173

SAC WIRELESS
540 W. MADISON ST.
9TH FLOOR
CHICAGO, IL 60661
www.sacw.com
312.895.4977

A&E
SAC WIRELESS
540 W. MADISON ST.
9TH FLOOR
CHICAGO, IL 60661
www.sacw.com
312.895.4977

LTE 4C/5C/BWE RRU SWAP
10080074
O'CONNEL WT
509 O'CONNEL STREET
WATERTOWN, WI 53094

REVISIONS

REV.	DATE	DESCRIPTION	INITIALS
4	02/25/21	FOR CONSTRUCTION	BM
3	02/02/21	FOR CONSTRUCTION	BM
2	02/20/20	FOR CONSTRUCTION	AR
1	10/18/19	FOR CONSTRUCTION	BM

NOT FOR CONSTRUCTION UNLESS LABELED AS FOR CONSTRUCTION

WISCONSIN NESTOR POPOWYCH A-3837 CHICAGO, IL ARCHITECT

DATE: 02/25/21

"I HEREBY CERTIFY THAT THESE PLANS WERE PREPARED BY ME OR UNDER MY DIRECT SUPERVISION AND THAT I AM A DULY REGISTERED ARCHITECT UNDER THE LAWS OF THE STATE OF WISCONSIN"

SHEET TITLE
CABLE NOTES & COLOR CODING

SHEET NUMBER
A5

Docusign Envelope ID: 9592B495-B7EC-4653-87F2-7B6B027BF5B1

MANUFACTURER: RAYCAP
DESCRIPTION: OVERVOLTAGE PROTECTION AND POWER MANAGEMENT JUNCTION BOX
MODEL #: DC12-48-60-0-25E-SS
FEATURES: PROVIDES PROTECTION FOR 12 INDIVIDUALS -48V DC CIRCUITS

WEIGHT: 56.3 LBS
NORMAL OPERATING DC VOLTAGE: 48V
MAX. CONTINUOUS OPERATING DC VOLTAGE: 75VDC
ENCLOSURE TYPE: OUTDOOR NEMA 4X RATED
CONDUIT FITTINGS: (3) 2" CONDUIT FITTINGS
(2) 2 1/2" CONDUIT FITTINGS
(1) 1" CONDUIT FITTINGS

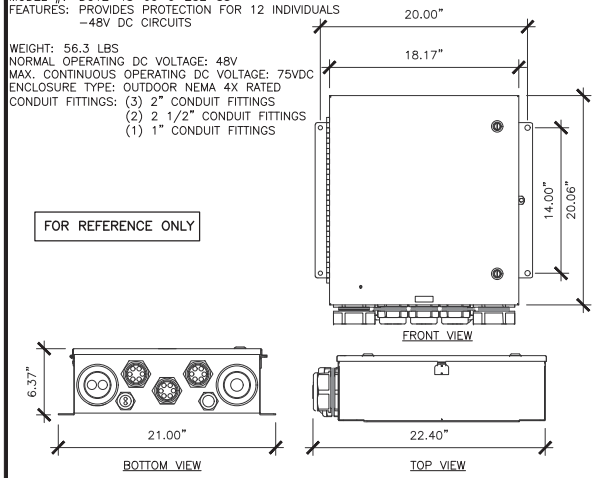

FOR REFERENCE ONLY

DC12-48-60-0-25E OUTDOOR RAYCAP DETAIL | NOT TO SCALE | 6

ERICCSON RRUS 4426 B66

DIMENSIONS, HxWxD: 14.96"X13.19"x5.8"

WEIGHT, WITHOUT MOUNTING KIT: 22 kg (48.4 lbs)

STACKING OF RRH'S IS NOT PERMITTED.
NO PAINTING OF RRU'S IS ALLOWED.

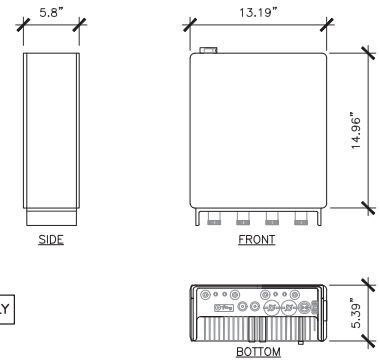

FOR REFERENCE ONLY

BWE (AWS) RRUS DETAIL | NOT TO SCALE | 4

ERICCSON RRUS 4478 B14

DIMENSIONS, HxWxD: 18.1"X13.4"x8.26"

WEIGHT, WITHOUT MOUNTING KIT: 27 kg (59.4 lbs)

STACKING OF RRH'S IS NOT PERMITTED.
NO PAINTING OF RRU'S IS ALLOWED.

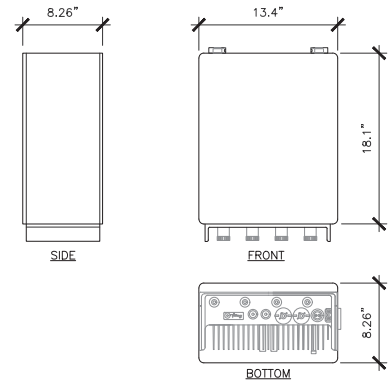

FOR REFERENCE ONLY

LTE 4C (FNET) RRUS DETAIL | NOT TO SCALE | 2

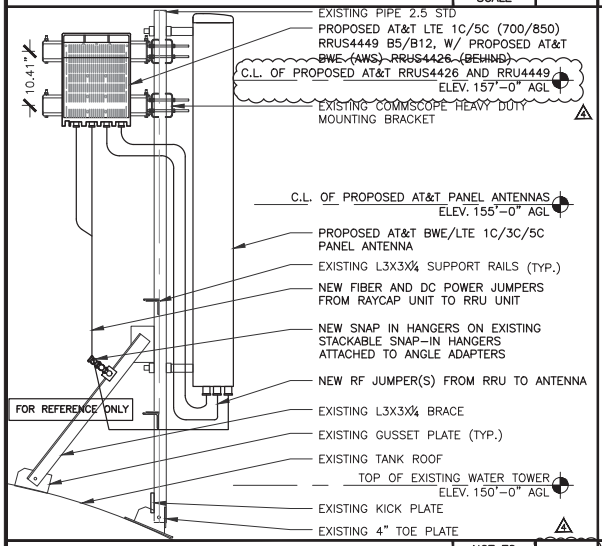

FOR REFERENCE ONLY

ANTENNA & RRUS MOUNTING DETAIL POS.3 | NOT TO SCALE | 5

ERICSSON RRUS 4449 B5/B12
DIMENSIONS, HxWxD: 17.9"x13.19"x9.44"
INCL. HANDLES, FEET AND SUNSHIELD, W/O FAN UNIT.

WEIGHT, WITHOUT MOUNTING KIT: 71 lbs (32.0 kg)

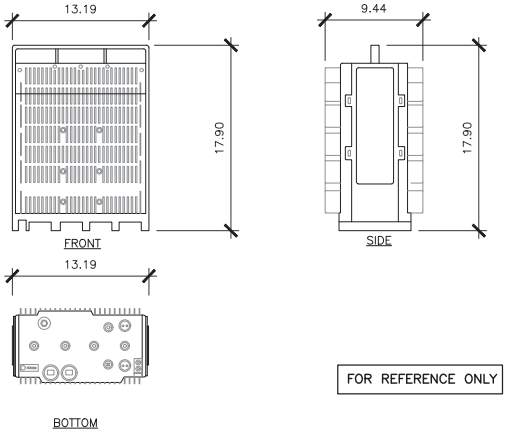

FOR REFERENCE ONLY

LTE 1C/5C (700/850) RRU DETAIL | NOT TO SCALE | 3

COMMSCOPE ANTENNAS NNH4-65B-R6H4

DIMENSIONS, HXWXD:	72"X19.6"X7.8"
WIND SPEED, MAXIMUM:	150 MPH (241 KM/H)
WEIGHT, WITHOUT MOUNTING:	84.4 LBS. (38.3 kg)
CONNECTOR:	8-PIN DIN FEMALE 8-PIN DIN MALE
CONNECTOR POSITION:	BOTTOM

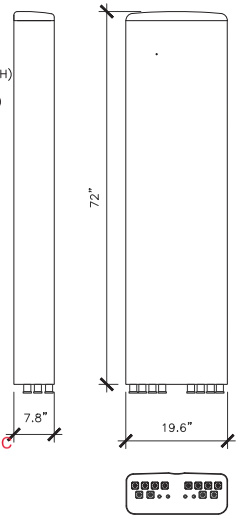

FOR REFERENCE ONLY

ZONUM ELECTRIC
03/19/2021
RAMON B. YACE
REDLINE

LTE ANTENNA DETAIL (POSITIONS 2 & 4) | NOT TO SCALE | 1

THE INFORMATION CONTAINED IN THIS SET OF CONSTRUCTION DOCUMENTS IS PROPRIETARY BY NATURE. ANY USE OR DISCLOSURE OTHER THAN THAT WHICH RELATES TO CARRIER SERVICES IS STRICTLY PROHIBITED.

AT&T
930 NATIONAL PARKWAY
SCHAUMBURG, IL 60173

SAC WIRELESS
540 W. MADISON ST.
9TH FLOOR
CHICAGO, IL 60661
www.sacw.com
312.895.4977

A&E
SAC WIRELESS
540 W. MADISON ST.
9TH FLOOR
CHICAGO, IL 60661
www.sacw.com
312.895.4977

LTE 4C/5C/BWE RRU SWAP
10080074
O'CONNEL WT
509 O'CONNEL STREET
WATERTOWN, WI 53094

REVISIONS

REV.	DATE	DESCRIPTION	INITIALS
4	02/25/21	FOR CONSTRUCTION	BM
3	02/02/21	FOR CONSTRUCTION	BM
2	02/20/20	FOR CONSTRUCTION	AR
1	10/18/19	FOR CONSTRUCTION	BM

NOT FOR CONSTRUCTION UNLESS LABELED AS FOR CONSTRUCTION

WISCONSIN
NESTOR POPOWYCH
A-3317
CHICAGO, IL
ARCHITECT
DATE: 02/25/21
"I HEREBY CERTIFY THAT THESE PLANS WERE PREPARED BY ME OR UNDER MY DIRECT SUPERVISION AND THAT I AM A DULY REGISTERED ARCHITECT UNDER THE LAWS OF THE STATE OF WISCONSIN"

SHEET TITLE
ANTENNA, RRUS AND MOUNTING DETAILS

SHEET NUMBER
A6

Docusign Envelope ID: 9592B495-B7EC-4653-87F2-7B6B027BF5B1

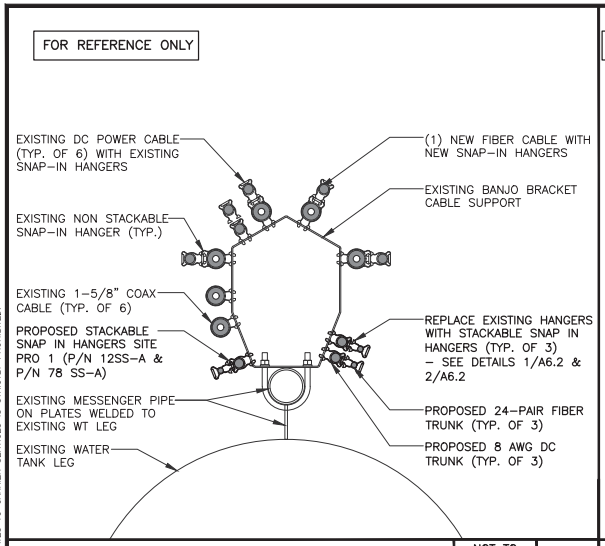

CABLE MOUNTING ON WATER TANK LEG | NOT TO SCALE | 6

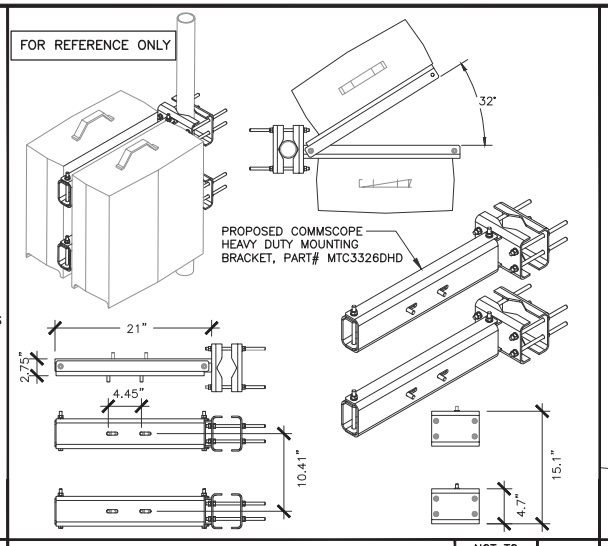

HEAVY DUTY MOUNTING BRACKET | NOT TO SCALE | 4

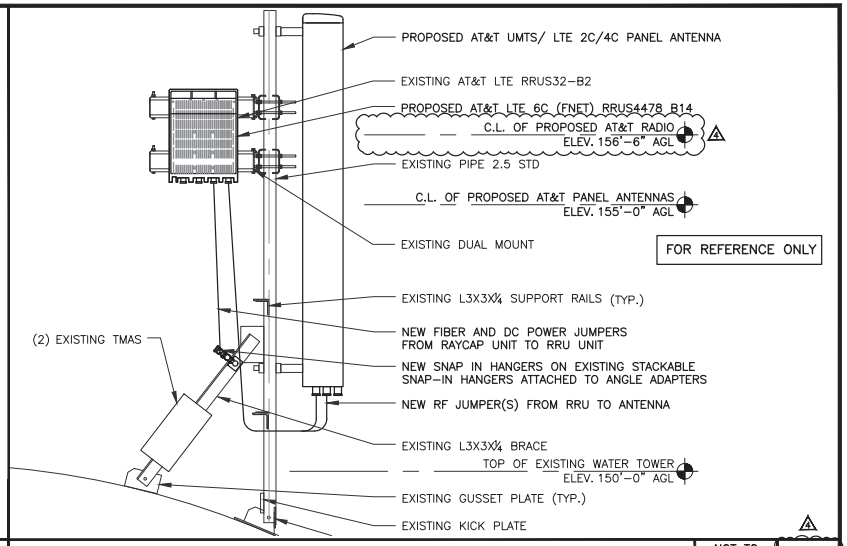

LTE UMTS/LTE 2C/4C PANEL ANTENNA DETAIL (B4) | NOT TO SCALE | 2

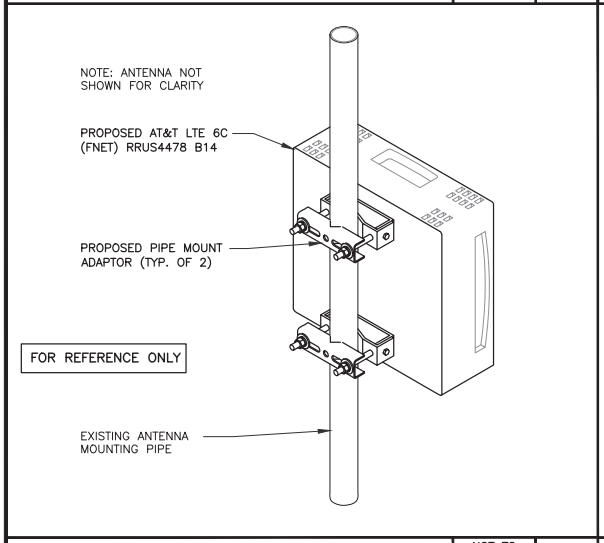

RRUS MOUNTING DETAIL | NOT TO SCALE | 5

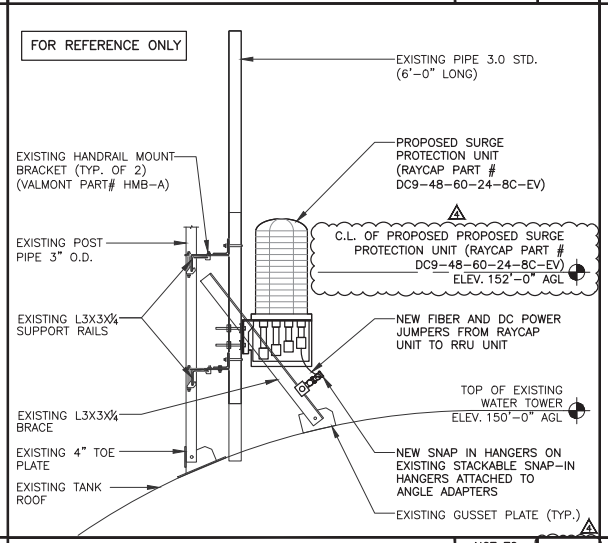

RAYCAP DETAIL | NOT TO SCALE | 3

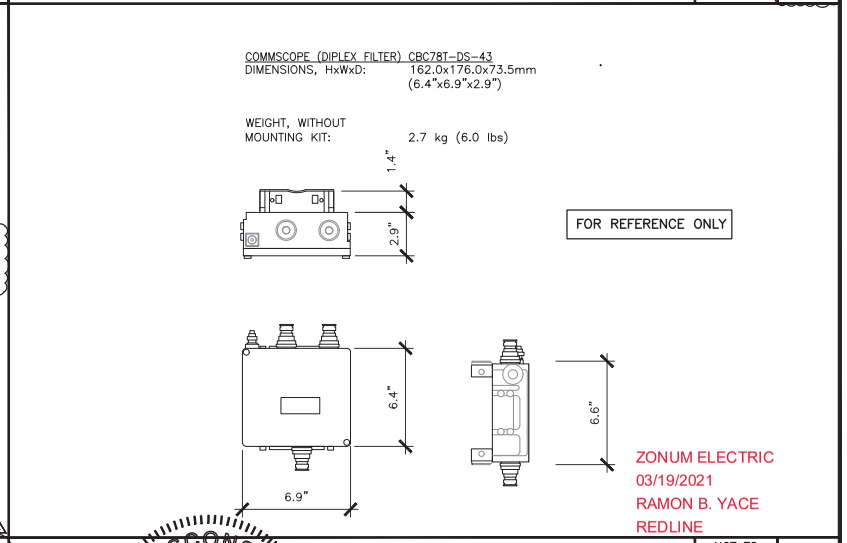

DIPLEXER DETAIL | NOT TO SCALE | 1

THE INFORMATION CONTAINED IN THIS SET OF CONSTRUCTION DOCUMENTS IS PROPRIETARY BY NATURE. ANY USE OR DISCLOSURE OTHER THAN THAT WHICH RELATES TO CARRIER SERVICES IS STRICTLY PROHIBITED.

AT&T
930 NATIONAL PARKWAY
SCHAUMBURG, IL 60173

SAC WIRELESS
540 W. MADISON ST.
9TH FLOOR
CHICAGO, IL 60661
www.sacw.com
312.895.4977

A&E
SAC WIRELESS
540 W. MADISON ST.
9TH FLOOR
CHICAGO, IL 60661
www.sacw.com
312.895.4977

LTE 4C/5C/BWE RRU SWAP
10080074
O'CONNEL WT
509 O'CONNEL STREET
WATERTOWN, WI 53094

REVISIONS

REV.	DATE	DESCRIPTION	INITIALS
4	02/25/21	FOR CONSTRUCTION	BM
3	02/02/21	FOR CONSTRUCTION	BM
2	02/20/20	FOR CONSTRUCTION	AR
1	10/18/19	FOR CONSTRUCTION	BM

NOT FOR CONSTRUCTION UNLESS LABELED AS FOR CONSTRUCTION

WISCONSIN
NESTOR POPOWYCH
A-3837
CHICAGO, IL
ARCHITECT
DATE: 02/25/21
"I HEREBY CERTIFY THAT THESE PLANS WERE PREPARED BY ME OR UNDER MY DIRECT SUPERVISION AND THAT I AM A DULY REGISTERED ARCHITECT UNDER THE LAWS OF THE STATE OF WISCONSIN"

SHEET TITLE
ANTENNA, RRUS AND MOUNTING DETAILS

SHEET NUMBER
A6.1

Docusign Envelope ID: 9592B495-B7EC-4653-87F2-7B6B027BF5B1

THE INFORMATION CONTAINED IN THIS SET OF CONSTRUCTION DOCUMENTS IS PROPRIETARY BY NATURE. ANY USE OR DISCLOSURE OTHER THAN THAT WHICH RELATES TO CARRIER SERVICES IS STRICTLY PROHIBITED.

NOT USED — NOT TO SCALE — 6

NOT USED — NOT TO SCALE — 4

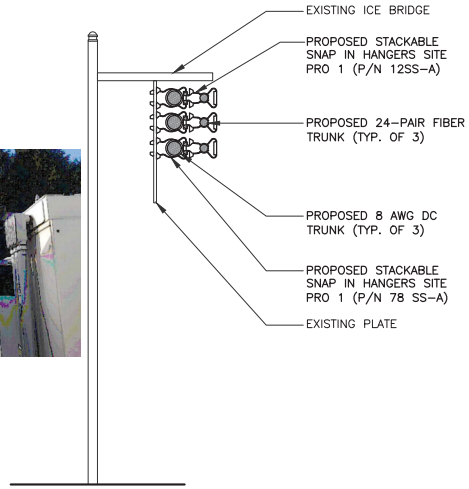

MOUNTING DETAIL TO ICE BRIDGE — NOT TO SCALE — 2

NOT USED — NOT TO SCALE — 5

NOT USED — NOT TO SCALE — 3

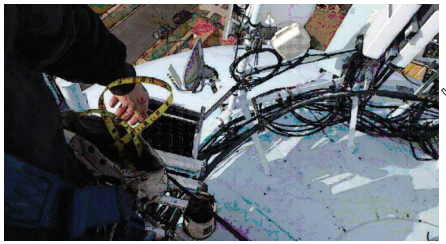

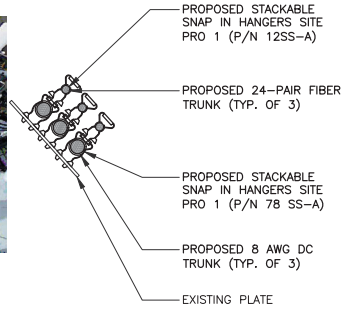

ZONUM ELECTRIC
03/19/2021
RAMON B. YACE
REDLINE

MOUNTING DETAIL TO TRAY — NOT TO SCALE — 1

AT&T
930 NATIONAL PARKWAY
SCHAUMBURG, IL 60173

SAC WIRELESS
540 W. MADISON ST.
9TH FLOOR
CHICAGO, IL 60661
www.sacw.com
312.895.4977

A&E
SAC WIRELESS
540 W. MADISON ST.
9TH FLOOR
CHICAGO, IL 60661
www.sacw.com
312.895.4977

LTE 4C/5C/BWE RRU SWAP
10080074
O'CONNEL WT
509 O'CONNEL STREET
WATERTOWN, WI 53094

REVISIONS

REV.	DATE	DESCRIPTION	INITIALS
4	02/25/21	FOR CONSTRUCTION	BM
3	02/02/21	FOR CONSTRUCTION	BM
2	02/20/20	FOR CONSTRUCTION	AR
1	10/18/19	FOR CONSTRUCTION	BM

NOT FOR CONSTRUCTION UNLESS LABELED AS FOR CONSTRUCTION

WISCONSIN
NESTOR POPOWYCH
A-3837
CHICAGO, IL
ARCHITECT

DATE: 02/25/21

"I HEREBY CERTIFY THAT THESE PLANS WERE PREPARED BY ME OR UNDER MY DIRECT SUPERVISION AND THAT I AM A DULY REGISTERED ARCHITECT UNDER THE LAWS OF THE STATE OF WISCONSIN"

SHEET TITLE
MOUNTING DETAILS

SHEET NUMBER
A6.2

Docusign Envelope ID: 9592B495-B7EC-4653-87F2-7B6B027BF5B1

THE INFORMATION CONTAINED IN THIS SET OF CONSTRUCTION DOCUMENTS IS PROPRIETARY BY NATURE. ANY USE OR DISCLOSURE OTHER THAN THAT WHICH RELATES TO CARRIER SERVICES IS STRICTLY PROHIBITED.

PROPOSED ANTENNA CONFIGURATION AND CABLE SCHEDULE

SECTOR	POS	TECH	ANTENNA	ANTENNA ℄ HEIGHT	AZ	TMA/RRU	DC SURGE AND DISTRIBUTION	CABLE TYPE	CABLE LENGTH	DOWNTILTS
A	1	WLL	CCI (X) BSA–M65R–BUU–H6	~~155~~' AGL 158	0°	(2) RRUS32 (X)	(3) RAYCAP (N) DC9–48–60–24–8C	(3) DC TRUNK LINES (X) (1) FIBER LINE (N)	240'	0 0.0
	2	EMPTY	–		–	(2) CBC78–DS–43 (N)		DC TRUNK LINE (SHARED W/A1) FIBER TRUNK (SHARED W/A1)		0
	3	BWE/LTE 1C/3C/5C	COMMSCOPE (N) NNH4–65B–R6H4		0°	(1) RRUS4449 B5/B12 (N) (1) RRUS4426 B66 (N)		DC TRUNK LINE (SHARED W/A1) FIBER TRUNK (SHARED W/A1)		–
	4	UMTS/LTE 2C/4C	COMMSCOPE (N) NNH4–65B–R6H4		0°	(1) RRUS4478 B14 (N) (1) RRUS 32–B2 (X) (2) RRUW (X)–GROUND (2) TMA (X)		(2) COAX DC TRUNK LINE (SHARED W/A1) FIBER TRUNK (SHARED W/A1)		0 0.5
B	1	WLL/UMTS	(1) COMMSCOPE (X) SBNHH–1D65B	2	120°	(1) RRUS32 (X)		(3) DC TRUNK LINES (X) (1) FIBER LINE (N)	220'	0 0.5
	2	EMPTY	–		–	–		–		0
	3	BWE/LTE 1C/3C/5C	COMMSCOPE (N) NNH4–65B–R6H4	~~155~~' AGL 158	120°	(1) RRUS4449 B5/B12 (N) (1) RRUS4426 B66 (N)		DC TRUNK LINE (SHARED W/B1) FIBER TRUNK (SHARED W/B1)		–
	4	UMTS/LTE 2C/4C	COMMSCOPE (N) NNH4–65B–R6H4		120°	(1) RRUS4478 B14 (N) (1) RRUS 32–B2 (X) (2) RRUW (X)–GROUND (2) TMA (X)		(2) COAX DC TRUNK LINE (SHARED W/B1) FIBER TRUNK (SHARED W/B1)		0 -0.5
C	1	WLL	CCI (X) BSA–M65R–BUU–H6	~~155~~' AGL 158	240°	(2) RRUS32 (X)		(3) DC TRUNK LINES (N) (1) FIBER LINE (N)	220'	0 0.5
	2	EMPTY	–		–	(2) CBC78–DS–43 (N)		DC TRUNK LINE (SHARED W/G1) FIBER TRUNK (SHARED W/G1)		0
	3	BWE/LTE 1C/3C/5C	COMMSCOPE (N) NNH4–65B–R6H4		240°	(1) RRUS4449 B5/B12 (N) (1) RRUS4426 B66 (N)		DC TRUNK LINE (SHARED W/G1) FIBER TRUNK (SHARED W/G1)		–
	4	UMTS/LTE 2C/4C	COMMSCOPE (N) NNH4–65B–R6H4		240°	(1) RRUS4478 B14 (N) (1) RRUS 32–B2 (X) (2) RRUW (X)–GROUND (2) TMA (X)		(2) COAX DC TRUNK LINE (SHARED W/G1) FIBER TRUNK (SHARED W/G1)		0 0.5

* INCLUDES SAFETY FACTOR OF 20' FT. (10 FT. AT BOTH ENDS OF CABLE RUN). CONTRACTOR TO VERIFY RF DATA WITH AT&T WIRELESS CONSTRUCTION MANAGER AND/OR RF ENGINEER PRIOR TO INSTALLATION

(N) = NEW
(X) = EXISTING
(XR) = EXISTING/RELOCATED
(E) = ELECTRICAL
(M) = MECHANICAL

ZONUM ELECTRIC
03/19/2021
RAMON B. YACE
REDLINE

ANTENNA & CABLE CONFIGURATION

NOT TO SCALE | 1

AT&T
930 NATIONAL PARKWAY
SCHAUMBURG, IL 60173

SAC WIRELESS
540 W. MADISON ST.
9TH FLOOR
CHICAGO, IL 60661
www.sacw.com
312.895.4977

A&E
SAC WIRELESS
540 W. MADISON ST.
9TH FLOOR
CHICAGO, IL 60661
www.sacw.com
312.895.4977

LTE 4C/5C/BWE RRU SWAP
10080074
O'CONNEL WT
509 O'CONNEL STREET
WATERTOWN, WI 53094

REVISIONS

REV.	DATE	DESCRIPTION	INITIALS
4	02/25/21	FOR CONSTRUCTION	BM
3	02/02/21	FOR CONSTRUCTION	BM
2	02/20/20	FOR CONSTRUCTION	AR
1	10/18/19	FOR CONSTRUCTION	BM

NOT FOR CONSTRUCTION UNLESS LABELED AS FOR CONSTRUCTION

WISCONSIN NESTOR POPOWYCH A-3837 CHICAGO, IL ARCHITECT
DATE: 02/25/21
"I HEREBY CERTIFY THAT THESE PLANS WERE PREPARED BY ME OR UNDER MY DIRECT SUPERVISION AND THAT I AM A DULY REGISTERED ARCHITECT UNDER THE LAWS OF THE STATE OF WISCONSIN"

SHEET TITLE
ANTENNA & CABLE CONFIGURATION

SHEET NUMBER
A7

Docusign Envelope ID: 9592B495-B7EC-4653-87F2-7B6B027BF5B1

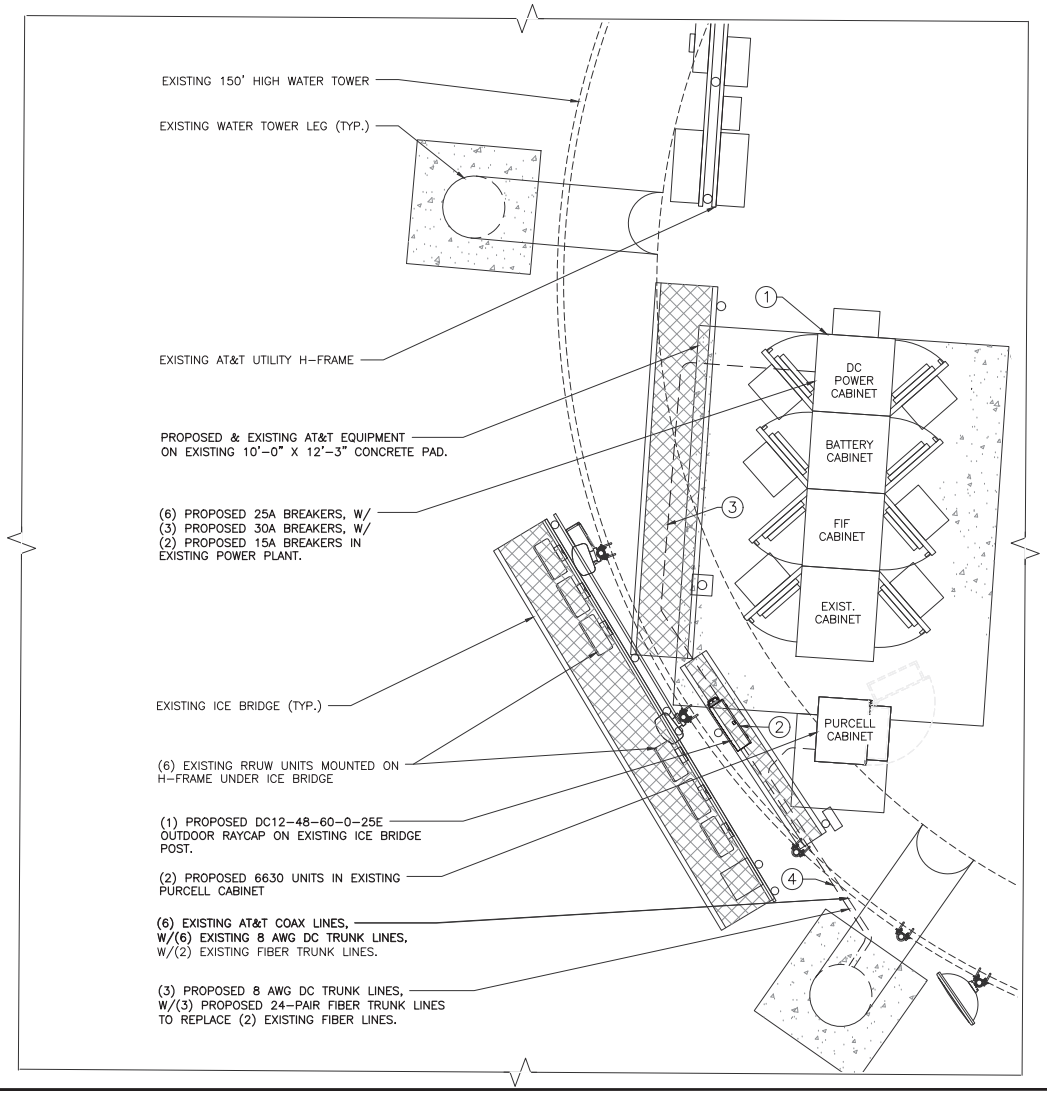

LEGEND:

1. PROVIDE (1) 25A DC CIRCUIT BREAKER PER RRUS UNIT INSIDE EXISTING −48V DC POWER PLANT. (TOTAL OF 6)
   PROVIDE (1) 30A DC CIRCUIT BREAKER PER RRUS UNIT INSIDE EXISTING −48V DC POWER PLANT. (TOTAL OF 3)
   PROVIDE (1) 15A DC CIRCUIT BREAKER PER 6630 UNIT INSIDE EXISTING −48V DC POWER PLANT. (TOTAL OF 2)
2. (1) NEW SURGE PROTECTION UNIT TO BE INSTALLED ON EXISTING ICE BRIDGE POST.
3. PROVIDE (3) SETS OF 6−"8 AWG DC CONDUCTOR BUNDLE BETWEEN PROPOSED CIRCUIT BREAKERS INSIDE EXISTING DC POWER PLANT AND PROPOSED RAYCAP SURGE PROTECTION UNIT ON EXISTING ICE BRIDGE POST.
4. PROVEDE (3) SETS OF 6−"8 AWG DC CONDUCTOR BUNDLE BETWEEN NEW SURGE PROTECTION UNIT ON EXISTING ICE BRIDGE POST AND PROPOSED RAYCAP UNITS MOUNTED NEAR ANTENNAS.

NOTES:

1. COORDINATE WITH CONSTRUCTION MANAGER FOR THE PROVISION OF DC CIRCUIT BREAKERS AND OTHER ANCILLARY ITEMS TO SUPPORT THE NEW EQUIPMENT.
2. PROPERLY BOND ALL EQUIPMENT AND CONDUCTIVE SURFACES TO EXISTING GROUND PER NEC AND AT&T STANDARDS.

LTE 4C (FNET) GROUND SCOPE:
- INSTALL (3) PROPOSED 25A BREAKERS IN EXISTING POWER PLANT.
- INSTALL (1) PROPOSED 15A BREAKER IN EXISTING POWER PLANT.
- INSTALL (1) PROPOSED 6630 UNIT IN EXISTING PURCELL CABINET.
- INSTALL (1) PROPOSED IDLE CABLE.
- INSTALL (3) PROPOSED ALARM CABLES.
- INSTALL (1) PROPOSED DC12-48-60-0-25E OUTDOOR RAYCAP ON EXISTING ICE BRIDGE POST.

LTE 5C GROUND SCOPE:
- INSTALL (3) PROPOSED 25A BREAKERS IN EXISTING POWER PLANT.
- INSTALL (1) PROPOSED 15A BREAKER IN EXISTING POWER PLANT.
- INSTALL (1) PROPOSED 6630 UNIT IN EXISTING PURCELL CABINET.

BWE RRU SWAP GROUND SCOPE:
- INSTALL (3) PROPOSED 30A BREAKERS IN EXISTING POWER PLANT.

ZONUM ELECTRIC
03/19/2021
RAMON B. YACE
REDLINE

NORTH

UTILITY PLAN

0 6" 1' 2'
SCALE: 1/2" = 1'-0" (24x36)
(OR) 1/4" = 1'-0" (11x17)

1

THE INFORMATION CONTAINED IN THIS SET OF CONSTRUCTION DOCUMENTS IS PROPRIETARY BY NATURE. ANY USE OR DISCLOSURE OTHER THAN THAT WHICH RELATES TO CARRIER SERVICES IS STRICTLY PROHIBITED.

AT&T
930 NATIONAL PARKWAY
SCHAUMBURG, IL 60173

SAC WIRELESS
540 W. MADISON ST.
9TH FLOOR
CHICAGO, IL 60661
www.sacw.com
312.895.4977

A&E
SAC WIRELESS
540 W. MADISON ST.
9TH FLOOR
CHICAGO, IL 60661
www.sacw.com
312.895.4977

LTE 4C/5C/BWE RRU SWAP
10080074
O'CONNEL WT
509 O'CONNEL STREET
WATERTOWN, WI 53094

REVISIONS

REV.	DATE	DESCRIPTION	INITIALS
4	02/25/21	FOR CONSTRUCTION	BM
3	02/02/21	FOR CONSTRUCTION	BM
2	02/20/20	FOR CONSTRUCTION	AR
1	10/18/19	FOR CONSTRUCTION	BM

NOT FOR CONSTRUCTION UNLESS LABELED AS FOR CONSTRUCTION

WISCONSIN
NESTOR POPOWYCH
A-3837
CHICAGO, IL
ARCHITECT
DATE: 02/25/21
"I HEREBY CERTIFY THAT THESE PLANS WERE PREPARED BY ME OR UNDER MY DIRECT SUPERVISION AND THAT I AM A DULY REGISTERED ARCHITECT UNDER THE LAWS OF THE STATE OF WISCONSIN"

SHEET TITLE
UTILITY PLAN

SHEET NUMBER
E1

Docusign Envelope ID: 9592B495-B7EC-4653-87F2-7B6B027BF5B1

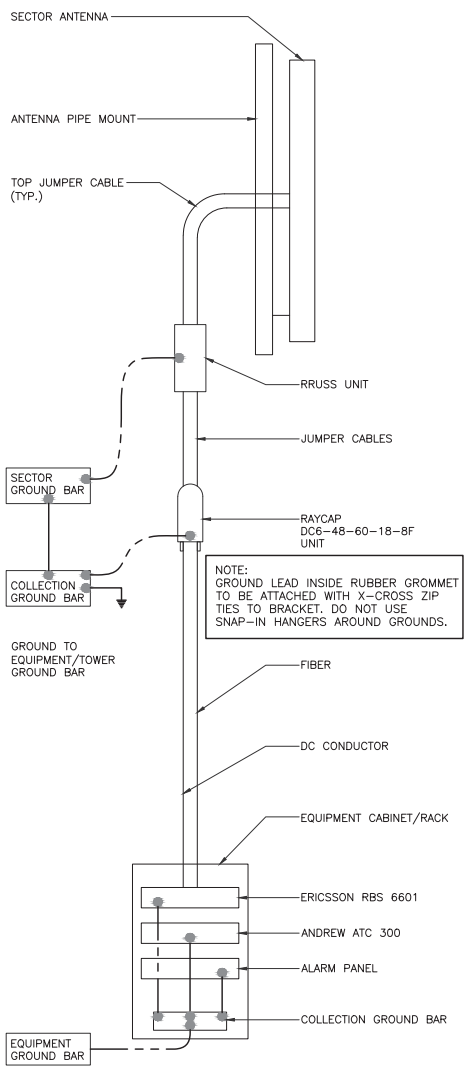

CABLE GROUNDING | NO SCALE | 4

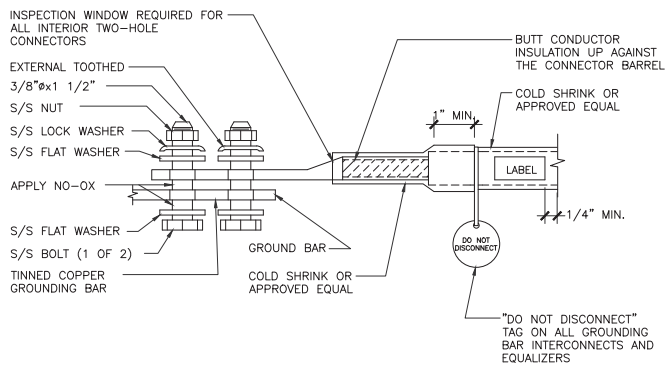

EXTERIOR TWO HOLE LUG DETAIL | NO SCALE | 3

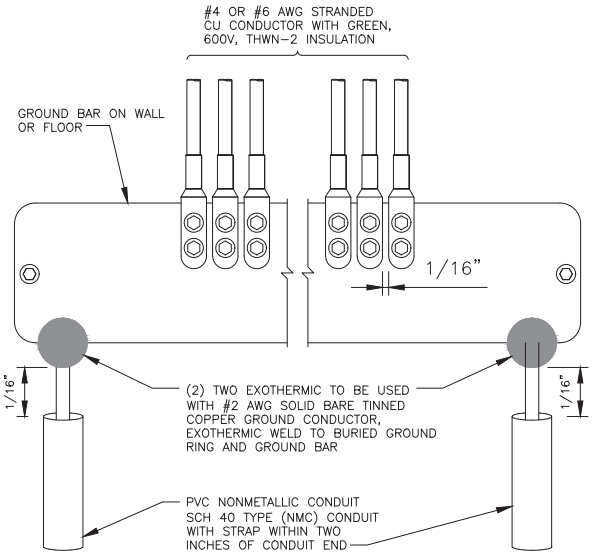

GROUND BAR DETAILS | NO SCALE | 2

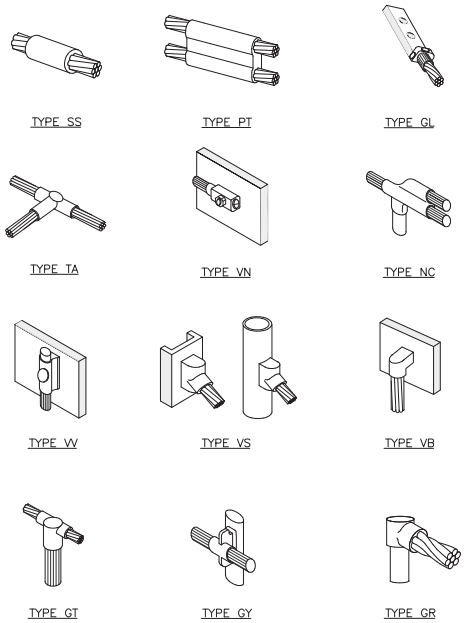

CADWELD DETAILS | NO SCALE | 1

ZONUM ELECTRIC
03/19/2021
RAMON B. YACE
REDLINE

THE INFORMATION CONTAINED IN THIS SET OF CONSTRUCTION DOCUMENTS IS PROPRIETARY BY NATURE. ANY USE OR DISCLOSURE OTHER THAN THAT WHICH RELATES TO CARRIER SERVICES IS STRICTLY PROHIBITED.

AT&T
930 NATIONAL PARKWAY
SCHAUMBURG, IL 60173

SAC WIRELESS
540 W. MADISON ST.
9TH FLOOR
CHICAGO, IL 60661
www.sacw.com
312.895.4977

A&E
SAC WIRELESS
540 W. MADISON ST.
9TH FLOOR
CHICAGO, IL 60661
www.sacw.com
312.895.4977

LTE 4C/5C/BWE RRU SWAP
10080074
O'CONNEL WT
509 O'CONNEL STREET
WATERTOWN, WI 53094

REVISIONS

REV.	DATE	DESCRIPTION	INITIALS
4	02/25/21	FOR CONSTRUCTION	BM
3	02/02/21	FOR CONSTRUCTION	BM
2	02/20/20	FOR CONSTRUCTION	AR
1	10/18/19	FOR CONSTRUCTION	BM

NOT FOR CONSTRUCTION UNLESS LABELED AS FOR CONSTRUCTION

WISCONSIN
NESTOR POPOWYCH
A-3837
CHICAGO, IL
ARCHITECT
DATE: 02/25/21
"I HEREBY CERTIFY THAT THESE PLANS WERE PREPARED BY ME OR UNDER MY DIRECT SUPERVISION AND THAT I AM A DULY REGISTERED ARCHITECT UNDER THE LAWS OF THE STATE OF WISCONSIN"

SHEET TITLE
GROUNDING DETAILS

SHEET NUMBER
G1

Docusign Envelope ID: 9592B495-B7EC-4653-87F2-7B6B027BF5B1

EXHIBIT E

ANTENNA SITE APPLICATION FORM

[Attached four-page application form follows; to be used in accordance with Section 8.1.2.1 of the Agreement]

Docusign Envelope ID: 9592B495-B7EC-4653-87F2-7B6B027BF5B1

THE CITY OF WATERTOWN

Effective 1/1/2022 – SUBJECT TO CHANGE

Date Received

ANTENNA SITE APPLICATION

City of Watertown, Wisconsin
800 Hoffmann Dr.
PO Box 477
Watertown, WI 53094
920-262-4075

A. **SITE APPLICATION**

- Water Tower Site Name and Location ("**Site**"): _____
- Wireless Carrier's Corporate Designation ("**Carrier**"): _____
- Desired Date of Operation: _____
- Description of Project (example: Install 3 new radio units, relocate 3 antennas):

_____

_____

_____

1. **Applicant Information**

a. Name of Applicant: _____

b. Applicant's Address: _____

c. Applicant's Contact Person: _____

i. Mobile: _____

ii. Email: _____

d. Technical Advisor (A&E Firm):_____

i. Mobile: _____

ii. Email: _____

2. **RF and Spectrum Information**

a. Proposed Radio Band:_____

b. Proposed Radio Frequencies: _____
(attach list, if necessary)

c. Type of Service (e.g., SMR, ESMR, PCS, Wi-Fi): _____

TMO Signatory Level: L06
NLG-97525

Docusign Envelope ID: 9592B495-B7EC-4653-87F2-7B6B027BF5B1

d. ☐ Licensed Spectrum ☐ Unlicensed Spectrum (check box)

e. If unlicensed spectrum, attach a detail description of the portions of the project using unlicensed spectrum.

f. If this is a Distributed Antenna System project, attach the Radio Frequency Coverage Maps prepared by the FCC Licensee.

g. This Site will be interconnected via radio frequency transmission to other existing or anticipated site(s) -- Yes or No (circle one)

3. **Antenna Facilities (attach applicable specifications)**

a. Number of antennas: _____

b. Number of zones: _____

c. Antenna dimensions:
_____

d. Antenna type, manufacturer, and model number:
_____

_____

e. Number of radio units: _____

f. Radio unit dimensions: _____

g. Radio unit type, manufacturer, and model number:
_____

_____

h. Transmission line or cable manufacturer and model number:
_____

i. Size of cables: _____

j. Number of cables: _____

k. Antenna location on tower:_____

(N, S, E, W, NE etc. or specify the exact antenna azimuths)

l. GPS Antenna -- Yes or No (circle one)

m. If yes, provide size, dimensions, and weight: _____

_____

4. **Dish Equipment (attach applicable specifications)**

a. Number of dishes: _____

b. Microwave -- Yes or No (circle one) Satellite -- Yes or No (circle one)

TMO Signatory Level: L06
NLG-97525

Docusign Envelope ID: 9592B495-B7EC-4653-87F2-7B6B027BF5B1

c. Dish dimensions:_____

_____

d. Dish type, manufacturer, and model number:
_____

_____

e. Provide manufacturer and model number of transmission line or cable:
_____

_____

f. Size of cables:_____ Number of cables: _____

g. Dish location on tower:_____

5. **Ground Equipment (attach applicable specifications)**

a. Square feet required: _____

b. Inside Tower -- Yes or No (circle one)

c. Inside Applicant's building -- Yes or No (circle one)

d. Number of cabinets: _____

e. Cabinet dimensions: _____

f. Number of air conditioners: _____ Description: _____

_____

g. Generator on Site -- Yes or No (circle one)

h. If yes, provide type, size, and location: _____

_____

i. Isolator manufacturer and model number:
_____

j. Duplexer manufacturer and model number:_____

k. Filters manufacturer and model number:
_____

l. Controls used in addition to the transmitter/receiver cabinet(s) -- Yes or No (circle one)

m. If yes, how many? _____ Provide manufacturer and model number: _____

_____

TMO Signatory Level: L06
NLG-97525

Docusign Envelope ID: 9592B495-B7EC-4653-87F2-7B6B027BF5B1

B. **AGREEMENT TO PAY CITY OF WATERTOWN'S ("OWNER") COSTS**

1. **Owner's Costs**. By signing this Application, Carrier agrees and acknowledges that it is responsible for the costs that Owner incurs related to the project proposed in this Application (collectively, "Owner's Costs"). Owner's Costs include, but are not limited to, those costs associated with the following work if performed by Owner, its employees, or its legal or technical consultants:

    a. Review of Carrier's construction drawings, structural analysis, and site survey

    b. Negotiation of agreements or amendments to related agreements between Carrier and Owner and related attorney's fees

    c. Pre-construction meeting and post-construction inspection of work done on Carrier's behalf

    d. Site coordination

2. **Deposit Required.**

    a. Carrier shall submit a deposit in the form of a certified check payable to the **City of Watertown*** in the amount of **$15,000.00**. The check shall be submitted with a completed and executed Application. Owner shall use the deposit to pay Owner's Costs, as described above.

    b. If the initial deposit is insufficient to cover all of Owner's Costs, Carrier shall provide Owner with an additional deposit in an amount agreed upon by Owner and Carrier. Upon Owner's request, Carrier shall cease any work at the Site until Owner receives the additional deposit from Carrier.

    c. Any unused deposit amounts will be returned to Carrier within after Carrier has completed its proposed project, provided that Owner's post-construction inspection confirms that the project has been built in accordance with the construction drawings for the project as approved by Owner.

To be executed by Carrier or Carrier's authorized representative:

Signature: _____ Date: _____

Name: _____
(Print or Type)

Title: _____

***Checks should be sent to:**

City of Watertown, WI
Attn: Water Department Clerk
106 Jones Street
PO Box 477
Watertown, WI 53094

TMO Signatory Level: L06
NLG-97525

Docusign Envelope ID: 9592B495-B7EC-4653-87F2-7B6B027BF5B1

THE CITY OF WATERTOWN

Effective 1/1/2022 – SUBJECT TO CHANGE

Date Received

ANTENNA SITE APPLICATION

City of Watertown, Wisconsin
800 Hoffmann Dr.
PO Box 477
Watertown, WI 53094
920-262-4075

A. **SITE APPLICATION**

- Water Tower Site Name and Location ("**Site**"): _____
- Wireless Carrier's Corporate Designation ("**Carrier**"): _____
- Desired Date of Operation: _____
- Description of Project (example: Install 3 new radio units, relocate 3 antennas):

  _____

  _____

  _____

1. **Applicant Information**

   a. Name of Applicant: _____

   b. Applicant's Address: _____

   c. Applicant's Contact Person: _____

      i. Mobile: _____

      ii. Email: _____

   d. Technical Advisor (A&E Firm):_____

      i. Mobile: _____

      ii. Email: _____

2. **RF and Spectrum Information**

   a. Proposed Radio Band:_____

   b. Proposed Radio Frequencies: _____
   (attach list, if necessary)

   c. Type of Service (e.g., SMR, ESMR, PCS, Wi-Fi): _____

   d. ☐ Licensed Spectrum ☐ Unlicensed Spectrum (check box)

Docusign Envelope ID: 9592B495-B7EC-4653-87F2-7B6B027BF5B1

e. If unlicensed spectrum, attach a detail description of the portions of the project using unlicensed spectrum.

f. If this is a Distributed Antenna System project, attach the Radio Frequency Coverage Maps prepared by the FCC Licensee.

g. This Site will be interconnected via radio frequency transmission to other existing or anticipated site(s) -- Yes or No (circle one)

3. **Antenna Facilities (attach applicable specifications)**

a. Number of antennas: _____

b. Number of zones: _____

c. Antenna dimensions:
_____

d. Antenna type, manufacturer, and model number:
_____

_____

e. Number of radio units: _____

f. Radio unit dimensions: _____

g. Radio unit type, manufacturer, and model number:
_____

_____

h. Transmission line or cable manufacturer and model number:
_____

i. Size of cables: _____

j. Number of cables: _____

k. Antenna location on tower:_____

(N, S, E, W, NE etc. or specify the exact antenna azimuths)

l. GPS Antenna -- Yes or No (circle one)

m. If yes, provide size, dimensions, and weight: _____

_____

4. **Dish Equipment (attach applicable specifications)**

a. Number of dishes: _____

b. Microwave -- Yes or No (circle one) Satellite -- Yes or No (circle one)

c. Dish dimensions:_____

Docusign Envelope ID: 9592B495-B7EC-4653-87F2-7B6B027BF5B1

_____

d. Dish type, manufacturer, and model number:
_____

_____

e. Provide manufacturer and model number of transmission line or cable:
_____

_____

f. Size of cables:_____ Number of cables: _____

g. Dish location on tower:_____

5. **Ground Equipment (attach applicable specifications)**

a. Square feet required: _____

b. Inside Tower -- Yes or No (circle one)

c. Inside Applicant's building -- Yes or No (circle one)

d. Number of cabinets: _____

e. Cabinet dimensions: _____

f. Number of air conditioners: _____ Description: _____

_____

g. Generator on Site -- Yes or No (circle one)

h. If yes, provide type, size, and location: _____

_____

i. Isolator manufacturer and model number:
_____

j. Duplexer manufacturer and model number:_____

k. Filters manufacturer and model number:
_____

l. Controls used in addition to the transmitter/receiver cabinet(s) -- Yes or No (circle one)

m. If yes, how many? _____ Provide manufacturer and model number:
_____

Docusign Envelope ID: 9592B495-B7EC-4653-87F2-7B6B027BF5B1

B. **AGREEMENT TO PAY CITY OF WATERTOWN'S ("OWNER") COSTS**

1. **Owner's Costs**. By signing this Application, Carrier agrees and acknowledges that it is responsible for the costs that Owner incurs related to the project proposed in this Application (collectively, "Owner's Costs"). Owner's Costs include, but are not limited to, those costs associated with the following work if performed by Owner, its employees, or its legal or technical consultants:

   a. Review of Carrier's construction drawings, structural analysis, and site survey

   b. Negotiation of agreements or amendments to related agreements between Carrier and Owner and related attorney's fees

   c. Pre-construction meeting and post-construction inspection of work done on Carrier's behalf

   d. Site coordination

2. **Deposit Required.**

   a. Carrier shall submit a deposit in the form of a certified check payable to the **City of Watertown*** in the amount of **$15,000.00**. The check shall be submitted with a completed and executed Application. Owner shall use the deposit to pay Owner's Costs, as described above.

   b. If the initial deposit is insufficient to cover all of Owner's Costs, Carrier shall provide Owner with an additional deposit in an amount agreed upon by Owner and Carrier. Upon Owner's request, Carrier shall cease any work at the Site until Owner receives the additional deposit from Carrier.

   c. Any unused deposit amounts will be returned to Carrier within after Carrier has completed its proposed project, provided that Owner's post-construction inspection confirms that the project has been built in accordance with the construction drawings for the project as approved by Owner.

To be executed by Carrier or Carrier's authorized representative:

Signature: _____ Date: _____

Name: _____
(Print or Type)

Title: _____

***Checks should be sent to:**

City of Watertown, WI
Attn: Water Department Clerk
106 Jones Street
PO Box 477
Watertown, WI 53094

Docusign Envelope ID: 9592B495-B7EC-4653-87F2-7B6B027BF5B1

EXHIBIT F

ANTENNA SITE SERVICE NOTICE FORM

[Attached three-page form follows; to be used in accordance with Section 8.3.1 of the Agreement]

Docusign Envelope ID: 9592B495-B7EC-4653-87F2-7B6B027BF5B1

Date Received
_____

ANTENNA SITE SERVICE NOTICE

Municipality: City of Watertown, Wisconsin
Address: 800 Hoffmann Drive
City, State, Zip: Watertown, WI 53094
Phone: 920-262-4075

Water Tower Site Name and Address: _____

_____

Wireless Carrier: _____

1. Name of Service Company: _____
2. Address: _____
3. Contact person for Applicant: _____ Telephone:_____

   Mobile: _____ Email: _____
4. Technical Site Advisor: _____ Telephone: _____

   Mobile: _____ Email: _____
5. Proposed Radio Band: _____
6. Propose Radio Frequency(s): _____
7. Type of Service Request (supply service ticket # if available) _____
8. List all personnel to be on site during service (attached copy of driver's license or US identification):

   A. _____

   B. _____

   C. _____

   D. _____

   E. _____
9. Antenna equipment – Attach applicable specifications.

   A. Number of antennas _____

   B. Number of zones _____

   C. Antenna dimensions _____

   D. Antenna type, manufacturer, and model no. _____

   E. Number of Radio Units _____

Docusign Envelope ID: 9592B495-B7EC-4653-87F2-7B6B027BF5B1

F. Radio Unit dimensions _____

G. Radio Unit type, manufacturer, and model no. _____

H. Transmission line or cable manufacturer and model no.
_____

I. Size of cables _____ Number of cables _____

J. Antenna location on the tower: _____
(N, S, E, W, NE etc. or specify the exact antenna azimuths)

K. GPS Antenna Y / N *(Circle One)*

If yes, provide Dimensions and Weight: _____

10. Dish equipment – Attach applicable specifications

A. Number of dishes ____ Dish dimensions _____ Microwave? Y / N *(Circle One)*

Satellite? Y / N *(Circle One)*

B. Dish type, manufacturer, and model no.
_____

C. Transmission line or cable manufacturer and model no. _____

D. Size of cables _____ Number of cables _____

E. Dish location on tower: _____

Initial here _____ to indicate specifications are attached.

11. Ground equipment – Attach applicable specifications

A. Square feet required _____

B. Inside Tower? Y / N *(Circle One)* Inside Lessee building? Y / N *(Circle One)* Outside? Y / N *(Circle One)*

C. Number of cabinets _____ Cabinet dimensions _____

D. Number of air conditioners _____ Air conditioner description _____

E. Generator on site? Y / N *(Circle One)* if yes, provide type, size, and location.

_____

F. Isolator manufacturer and model no. _____

G. Duplexer manufacturer and model no. _____

H. Filters manufacturer and model no. _____

I. Controls used in addition to the transmitter/receiver cabinet(s)? Y / N *(Circle One)*

If yes, how many? _____ Manufacturer and model no. _____

Initial here _____ to indicate specifications are attached.

12. Desired date of operation: _____

Docusign Envelope ID: 9592B495-B7EC-4653-87F2-7B6B027BF5B1

13. Description of scope of work:

(Example: Diagnose and repair 3 radio head units; replace nonfunctioning antenna with same model)

_____

_____

Service Company Representative _____ Date: _____

Print Name _____

Cell Phone:_____

Email:_____

Docusign Envelope ID: 9592B495-B7EC-4653-87F2-7B6B027BF5B1

EXHIBIT G

FORM OF MEMORANDUM OF LICENSE

[Attached]

Docusign Envelope ID: 9592B495-B7EC-4653-87F2-7B6B027BF5B1

MEMORANDUM OF AGREEMENT

THIS MEMORANDUM OF AGREEMENT ("**Memorandum**") is by and between the City of Watertown, Wisconsin, acting in its capacity as a municipal utility ("**Watertown**") and New Cingular Wireless PCS, LLC, a Delaware limited liability company ("**Licensee**").

RETURN TO:

Catherine Abejar, Lease Processing
MD7, LLC
950 W. Bethany Drive, Suite 700
Allen, TX 75013

P.I.N.
Pt. of 291-0815-0422-082

RECITALS

A. Watertown owns certain real property located at 509 O'Connell Street in the City of Watertown, Jefferson County, Wisconsin ("**Property**") on which Watertown maintains a water tower ("**Tower**").

B. Watertown and Licensee entered into an Amended and Restated Water Tower License Agreement ("**Agreement**") dated October 22, 2023 ("**Effective Date**") for the purpose of allowing Licensee to install and maintain certain telecommunications equipment on the Tower and within two portions of the Property totaling approximately 814 square feet.

C. This Memorandum is being recorded to place third parties on notice of the Agreement and of certain rights and obligations of Watertown and Licensee thereunder, which are summarized below.

NOW, THEREFORE, Watertown and Licensee acknowledge the following:

1. **Land Space**. Subject to the provisions of the Agreement and for the duration of its term, Watertown licenses to Licensee the portion of the Property legally described on **Exhibit 1** (the "**Land Space**").

2. **Term**. The initial term of the Agreement is for a period of five years commencing on November 1, 2023. Licensee has the option to renew and extend the Agreement for three (3) additional terms of five (5) years each, upon the terms and conditions set forth in the Agreement.

3. **Prior Leases**. The Agreement supersedes and replaces all prior leases between Watertown and Licensee and their predecessors in interest with respect to the Property, including the lease by and between the Watertown Water Commission and Indus, Inc., which is referenced in Memorandum of Lease recorded on July 8, 1999 in the office of the Jefferson County Register of Deeds in Volume 1111, Pages 208-210, as Document No. 1021616 and Notice of Lease Assignment recorded on June 27, 2001 in the office of the Jefferson County Register of Deeds in Volume 1223, Pages 596-597, as Document No. 1059553. That Memorandum of Lease and Notice of Lease Assignment are hereby terminated and are superseded and replaced by this Memorandum.

Docusign Envelope ID: 9592B495-B7EC-4653-87F2-7B6B027BF5B1

4. **Agreement Controlling**. This Memorandum is only a summary of some of the terms and conditions of the Agreement and is not intended to amend, alter, modify, abrogate, substitute, or otherwise affect any of the terms or conditions of the Agreement. In the event of a conflict between the provisions of this Memorandum and the provisions of the Agreement, the provisions of the Agreement shall control.

IN WITNESS WHEREOF, Watertown and Licensee have executed this Memorandum of Agreement as of the date of the last signature below.

City of Watertown, Wisconsin
acting in its capacity as a municipal utility

Signature: _____

Print Name: _____

Title: _____

Date: _____

STATE OF WISCONSIN)
) ss.
COUNTY OF _____)

Personally came before me this _____ day of _____, 2024, the above named _____ (name), _____(title) of the City of Watertown, Wisconsin, to me known to be the person who executed the foregoing Memorandum of Agreement and acknowledged the same.

_____

Print or Type Name: _____

Notary Public, State of Wisconsin

My Commission: _____

[Additional Signature Page Follows]

Docusign Envelope ID: 9592B495-B7EC-4653-87F2-7B6B027BF5B1

[Signature Page to Memorandum of Agreement]

LICENSEE:
NEW CINGULAR WIRELESS PCS, LLC,
a Delaware limited liability company

By: AT&T Mobility Corporation
Its: Manager

Signature: _____

Print Name: _____

Title: _____

Date: _____

STATE OF _____)
) ss.
COUNTY OF _____)

Personally came before me this _____ day of _____, 2024, the above named _____ (name), the _____ (title) of AT&T Mobility Corporation, manager of New Cingular Wireless PCS, LLC, to me known to be the person who executed the foregoing Memorandum of Agreement and acknowledged the same.

_____

Print or Type Name: _____

Notary Public, State of _____

My Commission: _____

Docusign Envelope ID: 9592B495-B7EC-4653-87F2-7B6B027BF5B1

EXHIBIT 1
TO MEMORANDUM OF AGREEMENT

Land Space

A PARCEL OF LAND BEING THAT PART OF THE EAST 72 FEET OF LOT 1 AND THE EAST 72 FEET OF THE NORTH 25 FEET OF LOT 2, ALL IN BLOCK 17 OF THE ORIGINAL PLAT-WEST SIDE OF ROCK RIVER OF THE CITY OF WATERTOWN, JEFFERSON COUNTY, WISCONSIN, FURTHER DESCRIBED AS FOLLOWS: COMMENCING AT THE NORTHWEST CORNER OF SECTION 4, IN TOWNSHIP 8 NORTH, RANGE 15 EAST, IN THE CITY OF WATERTOWN, JEFFERSON COUNTY, WISCONSIN; THENCE SOUTH 02 DEGREES 17 MINUTES 07 SECONDS EAST ALONG THE WEST LINE OF SAID SECTION, 561.85 FEET; THENCE SOUTH 86 DEGREES 17 MINUTES 01 SECONDS EAST, 851.58 FEET TO THE WEST LINE OF THE EAST 72 FEET OF LOT 1; THENCE SOUTH 03 DEGREES 42 MINUTES 51 SECONDS WEST ALONG SAID WEST LINE, 37.02 FEET; THENCE SOUTH 86 DEGREES 17 MINUTES 09 SECONDS EAST PERPENDICULAR TO THE LAST DESCRIBED COURSE, 15.07 FEET TO THE POINT OF BEGINNING; THENCE CONTINUING SOUTH 86 DEGREES 17 MINUTES 01 SECONDS EAST, 20.00 FEET; THENCE SOUTH 03 DEGREES 42 MINUTES 59 SECONDS WEST, 13.11 FEET; THENCE NORTH 87 DEGREES 01 MINUTES 25 SECONDS WEST, 1.72 FEET; THENCE SOUTH 02 DEGREES 58 MINUTES 35 SECONDS WEST, 13.38 FEET; NORTH 86 DEGREES 17 MINUTES 01 SECONDS WEST, 7.00 FEET; THENCE SOUTH 48 DEGREES 42 MINUTES 59 SECONDS WEST, 5.45 FEET; THENCE NORTH 41 DEGREES 17 MINUTES 01 SECONDS WEST, 16.74 FEET; THENCE NORTH 48 DEGREES 42 MINUTES 59 SECONDS EAST, 5.99 FEET; THENCE NORTH 03 DEGREES 42 MINUTES 59 SECONDS EAST, 14.30 FEET TO THE POINT OF BEGINNING. SAID PARCEL CONTAINS 534 SQUARE FEET, MORE OR LESS.

AND

A PARCEL OF LAND BEING THAT PART OF THE EAST 72 FEET OF LOT 1 IN BLOCK 17 OF THE ORIGINAL PLAT-WEST SIDE OF ROCK RIVER OF THE CITY OF WATERTOWN, JEFFERSON COUNTY, WISCONSIN, FURTHER DESCRIBED AS FOLLOWS: COMMENCING AT THE NORTHWEST CORNER OF SECTION 4, IN TOWNSHIP 8 NORTH, RANGE 15 EAST, IN THE CITY OF WATERTOWN, JEFFERSON COUNTY, WISCONSIN; THENCE SOUTH 02 DEGREES 17 MINUTES 07 SECONDS EAST ALONG THE WEST LINE OF SAID SECTION, 561.85 FEET; THENCE SOUTH 86 DEGREES 17 MINUTES 01 SECONDS EAST, 851.58 FEET TO THE WEST LINE OF THE EAST 72 FEET OF LOT 1; THENCE SOUTH 03 DEGREES 42 MINUTES 51 SECONDS WEST ALONG SAID WEST LINE, 13.27 FEET; THENCE SOUTH 86 DEGREES 17 MINUTES 09 SECONDS EAST PERPENDICULAR TO THE LAST DESCRIBED COURSE, 8.00 FEET TO THE POINT OF BEGINNING; THENCE CONTINUING SOUTH 86 DEGREES 17 MINUTES 09 SECONDS EAST, 14.00 FEET; THENCE SOUTH 03 DEGREES 42 MINUTES 51 SECONDS WEST, 20.00 FEET; THENCE NORTH 86 DEGREES 17 MINUTES 09 SECONDS WEST, 14.00 FEET; THENCE NORTH 03 DEGREES 42 MINUTES 51 SECONDS EAST, 20.00 FEET TO THE POINT OF BEGINNING. SAID PARCEL CONTAINS 280 SQUARE FEET, MORE OR LESS.