24.UP.029

**NOTICE OF PROPOSED UTILITY WORK**
**IN WALLER COUNTY RIGHT-OF-WAY**

Formal notice is hereby given that _____ (utility contractor) proposes to place a (1) - 2" HDPE Conduit with wireline/Fiber cable within the right-of-way of Sorsby Rd, Austin Branch Rd, Old Houston Hwy (street) as follows:

*Provide details for location, length, construction method, design (i.e. the dimensions from ROW line, edge of curb or pavement), etc.*

COMCAST IS ATTACHING FIBER TO EXISTING POLES, BORING AND INSTALLING NEW CONDUIT WITHIN THE RIGHT-OF-WAY OWNED BY THE WALLER COUNTY, TOTAL: 21944ft

The Conduit/fiber cable will be constructed and maintained on the road right-of-way as directed by Waller County Road & Bridge in accordance with governing laws. Our firm further understands that the County considers proper traffic control measures as those complying with applicable portions of the Texas Manual on Uniform Traffic Control Devices required for adoption by the "Transportation Code" (Ch 251).

The location and description of the proposed work and appurtenances is more fully shown by three (3) copies of drawings attached to this notice.

Construction is proposed to begin on or after the 20 day of October, 2024. Firm: Quasar INC (on behalf of Comcast) Address: 108 Wiley Hills Trail

By: Karolina Piszczek Woodstock GA 30188

Signature: _____ Phone: +1 470 330 9548

Title: Permitting Manager Email: kpiszczek@quasar.us

**APPROVAL**

This application is hereby approved subject to the following understandings and restrictions.

It is expressly understood that the said Waller County does not hereby imply to grant any right, claim, title or easement in or upon this County Road; and it is further understood that in the future, should Waller County, for any reason, need to work, improve, relocate, widen, increase, add to, decrease, or in any manner change the structure of this road or right-of-way, this line, if affected, will be moved at the direction of the Waller County Engineer or Road Administrator with thirty (30) days written notice,.

This installation work shall not damage any part of the roadway and adequate provisions shall be made to cause a minimum of inconvenience to traffic and adjacent property owners. Permit shall be effective upon acceptance date of Formal Notice presentation in Commissioners Court, for a duration of one (1) year, with the opportunity of a six (6) month extension after a written request is sent and approved by the County Engineer.

**APPROVED BY WALLER COUNTY ROAD & BRIDGE DEPT.**

_____
County Engineer or Road Administrator

8-21-24
Date

Traffic Controls Required: Y (N)
Traffic Controls Reviewed By: RJPG
Bond: Y (N) Bond Amount ($): _____
Floodplain Dev. Permit Required: Y (N)
Permit #: _____ Precinct #: 1
R&B Inspector: ROBERT J. GOODSPEED

# PERMIT TO CONSTRUCT UTILITY
# IN WALLER COUNTY RIGHT-OF-WAY

ROAD: Sorsby Rd, Austin Branch Rd, Old Houston Hwy

DATE: **08/20/2024**

To: Comcast
[Quassar Inc]
108 Wiley Hills Trail
Woodstock, GA 30188

**Permit # 24.UP.029**

The location on the right-of-way of your proposed buried line as shown by the accompanying notice dated **08/19/2024** is approved.

Your attention is directed to Art. 1436A (for power lines) and Art. 1416 (for communication lines) Vernon's Annotated Texas Civil Statutes with particular attention to the following provisions:

1. The Court Commission may designate the place along the right-of-way where such lines shall be constructed.
2. Emplacement of buried lines shall be a minimum of 36 inches below the flow line of the existing ditch. For installations parallel to the right-of-way, the utility shall be located within three (3) feet of the edge of the right-of-way, unless otherwise approved by the County.
3. All placement of lines beneath roadways and asphalt or concrete paved driveways shall be jacked or bored. No open cut will be allowed within five feet of the edge of roadways or such driveways. Open cuts on unpaved driveways shall be performed only with a trenching machine and shall not be excavated. In such cases the trench shall be backfilled and compacted. The driveway surface shall be restored to its original condition. Any variance to these requirements shall have the Commissioners' Court approval.
4. All buried water lines shall be marked thoroughly with detectable tracer wire. All other lines shall be marked thoroughly with detectable underground warning tape. Public to be safe-guarded by use of construction signs and barricades. Identification markers shall be placed along right-of-way lines, that is readily identifiable, indicating name of Company, type of line and emergency contact number.
5. Restore roads to their original condition. Trench is to be back-tracked, dragged, graded and filled as necessary to minimize erosion and sedimentation resulting from the proposed installation. Ditches are to be left clear for drainage.
6. The Court Commission may require the owner to relocate this line, for valid reasons under the law by giving thirty (30) days written notice.

**The contractor must notify the County Engineer at (979) 826-7670, forty-eight (48) hours prior to starting construction of the line in order that we may have a representative present. An inspection of the line installation is required prior to backfilling the excavation to confirm proper cover depth.**

SPECIAL PROVISIONS:

WALLER COUNTY COMMISSIONERS' COURT

_____

Carbett "Trey" J. Duhon III, County Judge

It is ORDERED by the Court on motion by Commissioner _____, duly seconded by Commissioner _____, that the above and foregoing request be and the same is hereby approved, with _____ members present voting in favor and _____ members present voting opposed. The County Engineer is authorized to comply with the above requests.

_____

Date

_____

Debbie Hollan, County Clerk

_____

Deputy

PREPARED BY:

QUASAR, INC.

COMCAST IS ATTACHING FIBER TO EXISTING POLES, BORING AND INSTALLING NEW CONDUIT WITHIN THE RIGHT-OF-WAY OWNED BY THE WALLER COUNTY.
TOTAL: 21944ft

NO SCALE

N
W E
S

ENGINEERED FOR:

COMCAST

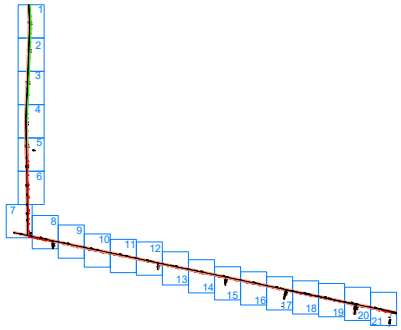


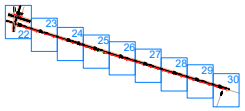


PREPARED BY:

QUASAR, INC.

COMCAST IS ATTACHING FIBER TO EXISTING POLES, BORING AND INSTALLING NEW CONDUIT WITHIN THE RIGHT-OF-WAY OWNED BY THE WALLER COUNTY.
TOTAL: 21944ft

NO SCALE

N
W
E
S

ENGINEERED FOR:

COMCAST

NO MATCH SHEET

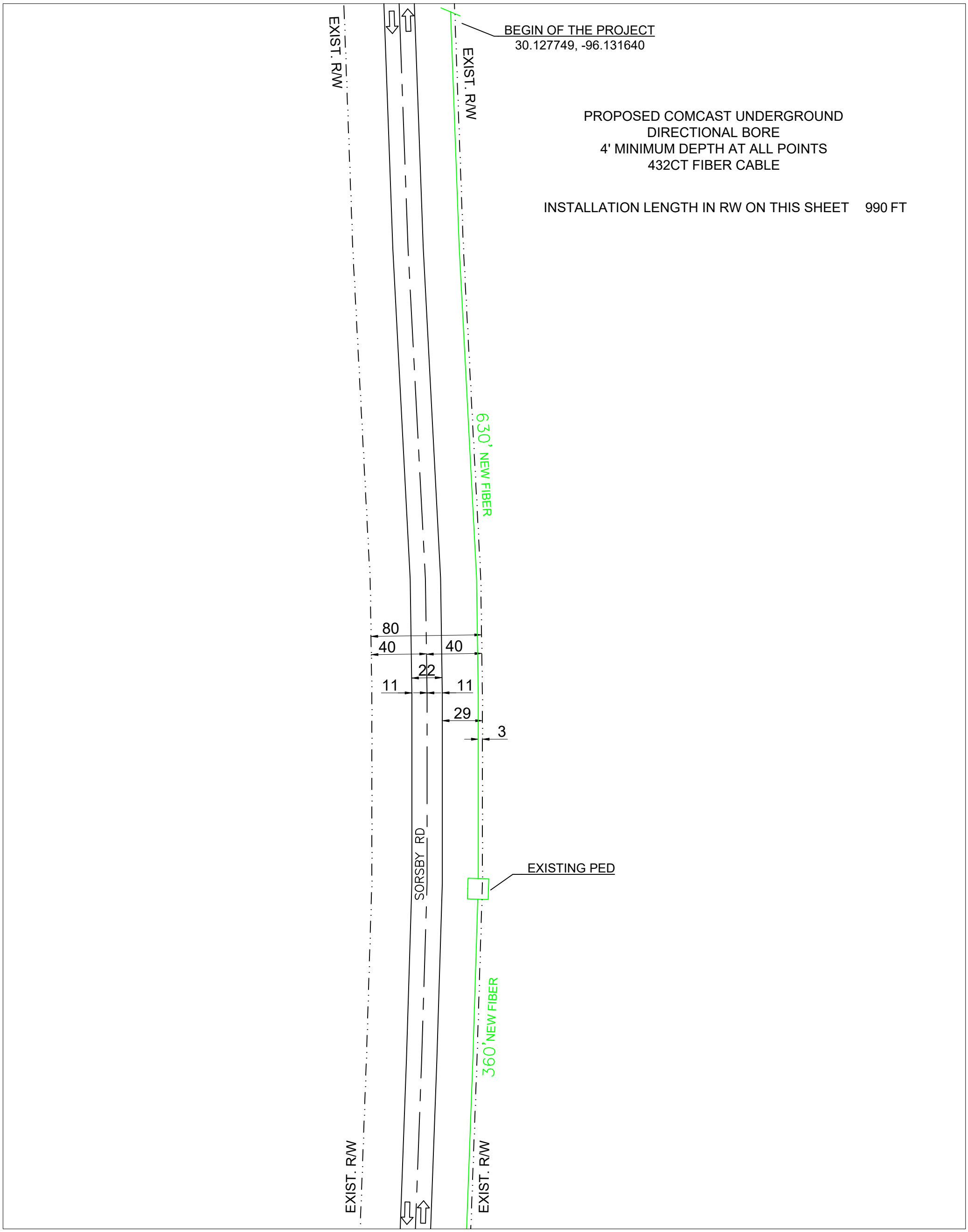


NO MATCH SHEET

NO MATCH SHEET

MATCH SHEET 2

PREPARED BY:

QUASAR, INC.

EXISTING POLE
PROPOSED PEDESTAL
WATER VALVE
FIBER MARKER
GAS MARKER
MANHOLE
SEWER MANHOLE
STORM DRAIN

RIGHT OF WAY LINE
IRRIGATION LINE
WATER LANE
GAS LANE
EXISTING ANCHOR
R 25 PROPOSED RISER

PROPOSED COAXIAL CABLE
PROPOSED FIBER CABLE
PROPOSED DIRECTIONAL BORE
EXISTING CABLE

LEGEND:
RW - RIGHT OF WAY
EOP - EDGE OF PAVEMENT
DW - DRIVEWAY
PDW - PAVED DRIVEWAY

NOTES:
BORE HOLE TO BE FILLED SAME DAY
VAULT HOLE TO BE FILLED SAME DAY
ALL HOLE TO BE TAMPED AND SODDED

N
W E
S

ENGINEERED FOR:

COMCAST

WALLER COUNTY

SORSBY RD

TRANSPORT FIBER

NO SCALE

SHEET 1 OF 30

MATCH SHEET 1

NO MATCH SHEET

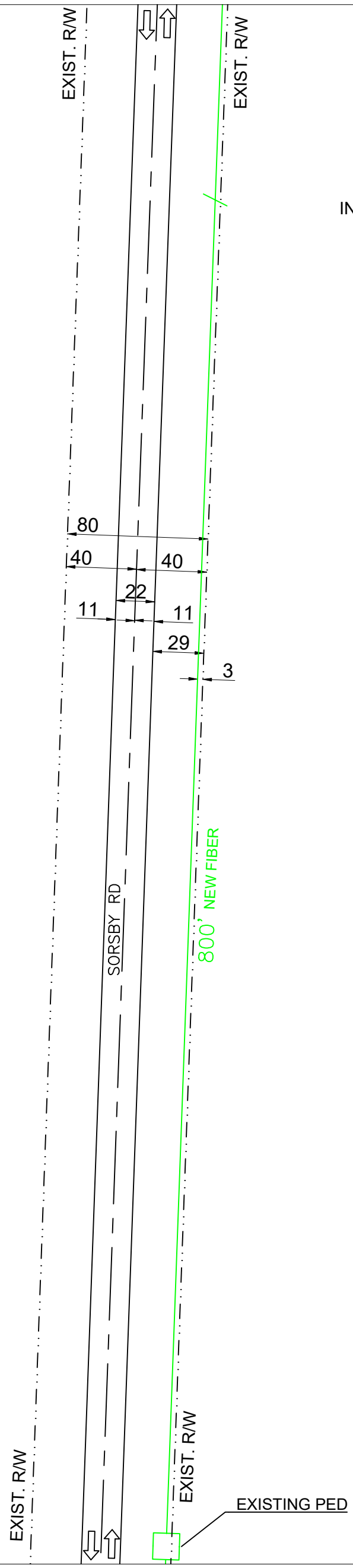


PROPOSED COMCAST UNDERGROUND
DIRECTIONAL BORE
4' MINIMUM DEPTH AT ALL POINTS
432CT FIBER CABLE

INSTALLATION LENGTH IN RW ON THIS SHEET 800 FT

NO MATCH SHEET

MATCH SHEET 3

PREPARED BY:

QUASAR, INC.

EXISTING POLE
PROPOSED PEDESTAL
WATER VALVE
FIBER MARKER
GAS MARKER
MANHOLE
SEWER MANHOLE
STORM DRAIN

RIGHT OF WAY LINE
IRRIGATION LINE
WATER LANE
GAS LANE
EXISTING ANCHOR
R 25 PROPOSED RISER

PROPOSED COAXIAL CABLE
PROPOSED FIBER CABLE
PROPOSED DIRECTIONAL BORE
EXISTING CABLE

LEGEND:
RW - RIGHT OF WAY
EOP - EDGE OF PAVEMENT
DW - DRIVEWAY
PDW - PAVED DRIVEWAY

NOTES:
BORE HOLE TO BE FILLED SAME DAY
VAULT HOLE TO BE FILLED SAME DAY
ALL HOLE TO BE TAMPED AND SODDED

N W E S

ENGINEERED FOR:

COMCAST

WALLER COUNTY

SORSBY RD

TRANSPORT FIBER

NO SCALE

SHEET 2 OF 30

MATCH SHEET 2

NO MATCH SHEET

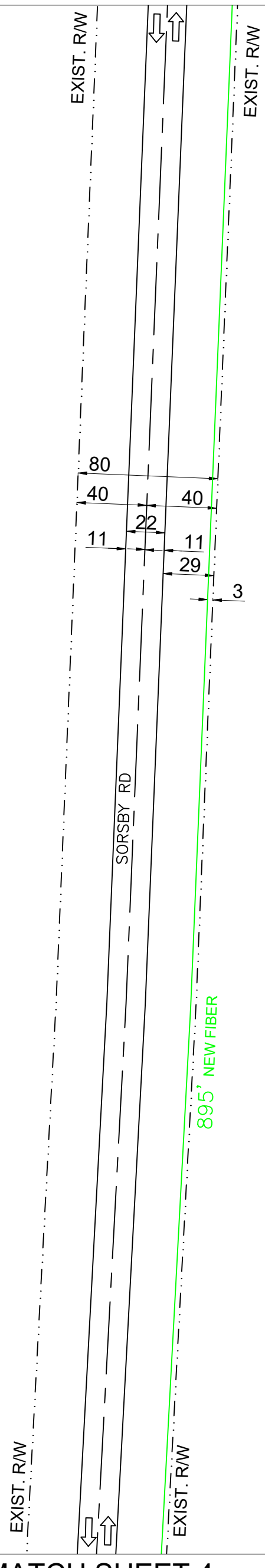


PROPOSED COMCAST UNDERGROUND
DIRECTIONAL BORE
4' MINIMUM DEPTH AT ALL POINTS
432CT FIBER CABLE

INSTALLATION LENGTH IN RW ON THIS SHEET 895 FT

NO MATCH SHEET

MATCH SHEET 4

PREPARED BY:

QUASAR, INC.

EXISTING POLE
PROPOSED PEDESTAL
WATER VALVE
FIBER MARKER
GAS MARKER
MANHOLE
SEWER MANHOLE
STORM DRAIN

RIGHT OF WAY LINE
IRRIGATION LINE
WATER LANE
GAS LANE
EXISTING ANCHOR
R 25 PROPOSED RISER

PROPOSED COAXIAL CABLE
PROPOSED FIBER CABLE
PROPOSED DIRECTIONAL BORE
EXISTING CABLE

LEGEND:
RW - RIGHT OF WAY
EOP - EDGE OF PAVEMENT
DW - DRIVEWAY
PDW - PAVED DRIVEWAY

NOTES:
BORE HOLE TO BE FILLED SAME DAY
VAULT HOLE TO BE FILLED SAME DAY
ALL HOLE TO BE TAMPED AND SODDED

N W E S

ENGINEERED FOR:

COMCAST

WALLER COUNTY

SORSBY RD

TRANSPORT FIBER

NO SCALE

SHEET 3 OF 30

MATCH SHEET 3

NO MATCH SHEET

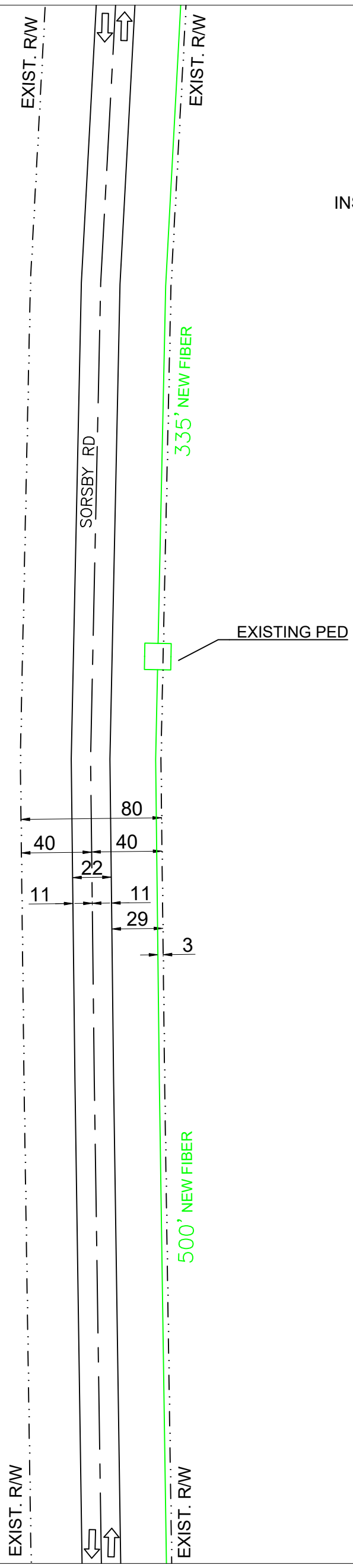


PROPOSED COMCAST UNDERGROUND
DIRECTIONAL BORE
4' MINIMUM DEPTH AT ALL POINTS
432CT FIBER CABLE

INSTALLATION LENGTH IN RW ON THIS SHEET 835 FT

NO MATCH SHEET

MATCH SHEET 5

PREPARED BY:

QUASAR, INC.

EXISTING POLE
PROPOSED PEDESTAL
WATER VALVE
FIBER MARKER
GAS MARKER
MANHOLE
SEWER MANHOLE
STORM DRAIN

RIGHT OF WAY LINE
IRRIGATION LINE
WATER LANE
GAS LANE
EXISTING ANCHOR
R 25 PROPOSED RISER

PROPOSED COAXIAL CABLE
PROPOSED FIBER CABLE
PROPOSED DIRECTIONAL BORE
EXISTING CABLE

LEGEND:
RW - RIGHT OF WAY
EOP - EDGE OF PAVEMENT
DW - DRIVEWAY
PDW - PAVED DRIVEWAY

NOTES:
BORE HOLE TO BE FILLED SAME DAY
VAULT HOLE TO BE FILLED SAME DAY
ALL HOLE TO BE TAMPED AND SODDED

N
W E
S

ENGINEERED FOR:

COMCAST

WALLER COUNTY

SORSBY RD

TRANSPORT FIBER

NO SCALE

SHEET 4 OF 30

MATCH SHEET 4

NO MATCH SHEET

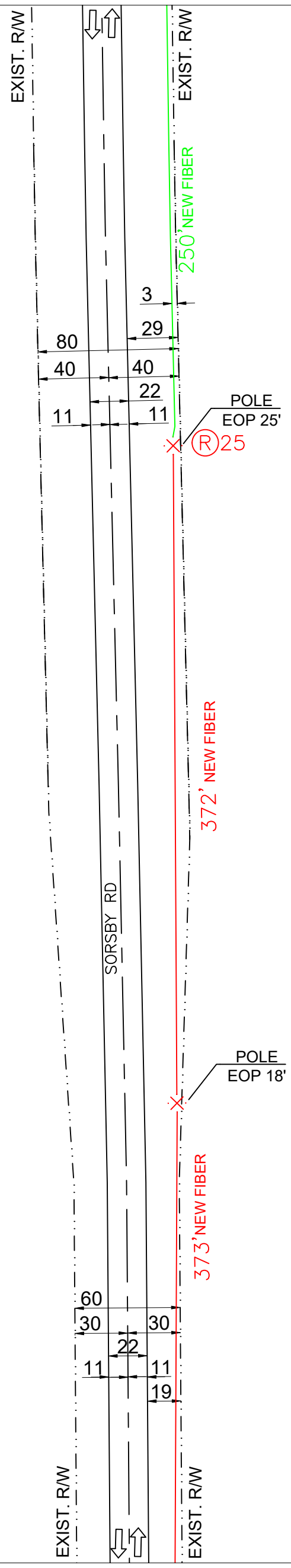


PROPOSED COMCAST NEW ATTACHMENT
18' MINIMUM HEIGHT AT ALL POINTS
432CT FIBER CABLE
PROPOSED COMCAST UNDERGROUND
DIRECTIONAL BORE
4' MINIMUM DEPTH AT ALL POINTS
432CT FIBER CABLE

INSTALLATION LENGTH IN RW ON THIS SHEET 995 FT

21400
SORSBY RD

NO MATCH SHEET

MATCH SHEET 6

PREPARED BY:

QUASAR, INC.

EXISTING POLE
PROPOSED PEDESTAL
WATER VALVE
FIBER MARKER
GAS MARKER
MANHOLE
SEWER MANHOLE
STORM DRAIN

RIGHT OF WAY LINE
IRRIGATION LINE
WATER LANE
GAS LANE
EXISTING ANCHOR
R 25 PROPOSED RISER

PROPOSED COAXIAL CABLE
PROPOSED FIBER CABLE
PROPOSED DIRECTIONAL BORE
EXISTING CABLE

LEGEND:
RW - RIGHT OF WAY
EOP - EDGE OF PAVEMENT
DW - DRIVEWAY
PDW - PAVED DRIVEWAY

NOTES:
BORE HOLE TO BE FILLED SAME DAY
VAULT HOLE TO BE FILLED SAME DAY
ALL HOLE TO BE TAMPED AND SODDED

N
W E
S

ENGINEERED FOR:

COMCAST

WALLER COUNTY
SORSBY RD
TRANSPORT FIBER

NO SCALE

SHEET 5 OF 30

MATCH SHEET 5

NO MATCH SHEET

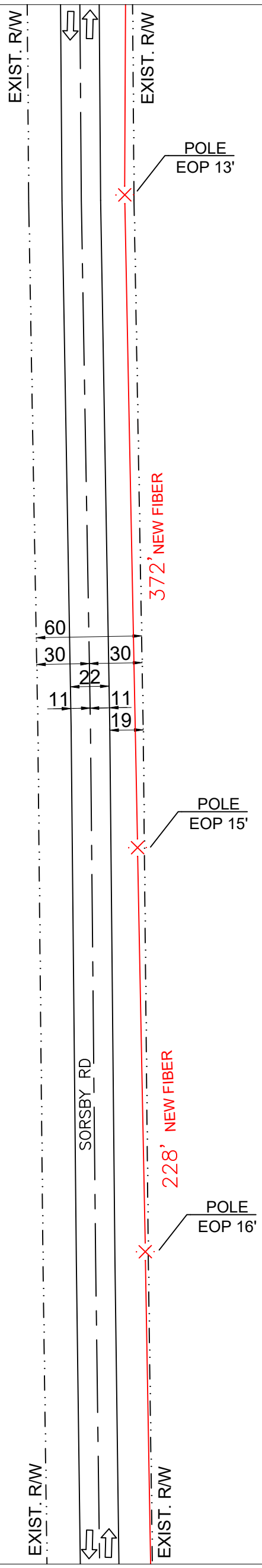


PROPOSED COMCAST NEW ATTACHMENT
18' MINIMUM HEIGHT AT ALL POINTS
432CT FIBER CABLE

INSTALLATION LENGTH IN RW ON THIS SHEET 600 FT

NO MATCH SHEET

MATCH SHEET 7

PREPARED BY:

QUASAR, INC.

EXISTING POLE
PROPOSED PEDESTAL
WATER VALVE
FIBER MARKER
GAS MARKER
MANHOLE
SEWER MANHOLE
STORM DRAIN

RIGHT OF WAY LINE
IRRIGATION LINE
WATER LANE
GAS LANE
EXISTING ANCHOR
25 PROPOSED RISER

PROPOSED COAXIAL CABLE
PROPOSED FIBER CABLE
PROPOSED DIRECTIONAL BORE
EXISTING CABLE

LEGEND:
RW - RIGHT OF WAY
EOP - EDGE OF PAVEMENT
DW - DRIVEWAY
PDW - PAVED DRIVEWAY

NOTES:
BORE HOLE TO BE FILLED SAME DAY
VAULT HOLE TO BE FILLED SAME DAY
ALL HOLE TO BE TAMPED AND SODDED

N
W E
S

ENGINEERED FOR:

COMCAST

WALLER COUNTY

SORSBY RD

TRANSPORT FIBER

NO SCALE

SHEET 6 OF 30

MATCH SHEET 6

PROPOSED COMCAST NEW ATTACHMENT
18' MINIMUM HEIGHT AT ALL POINTS
432CT FIBER CABLE

INSTALLATION LENGTH IN RW ON THIS SHEET 1040 FT

NO MATCH SHEET

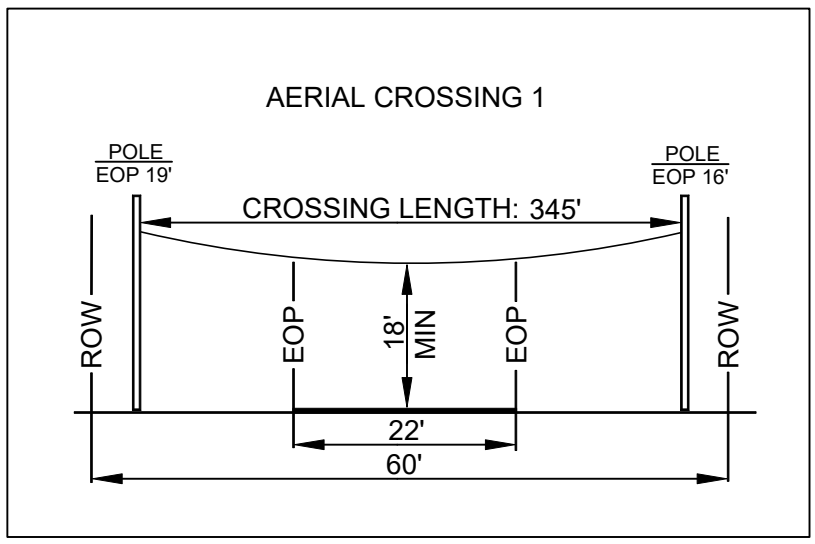


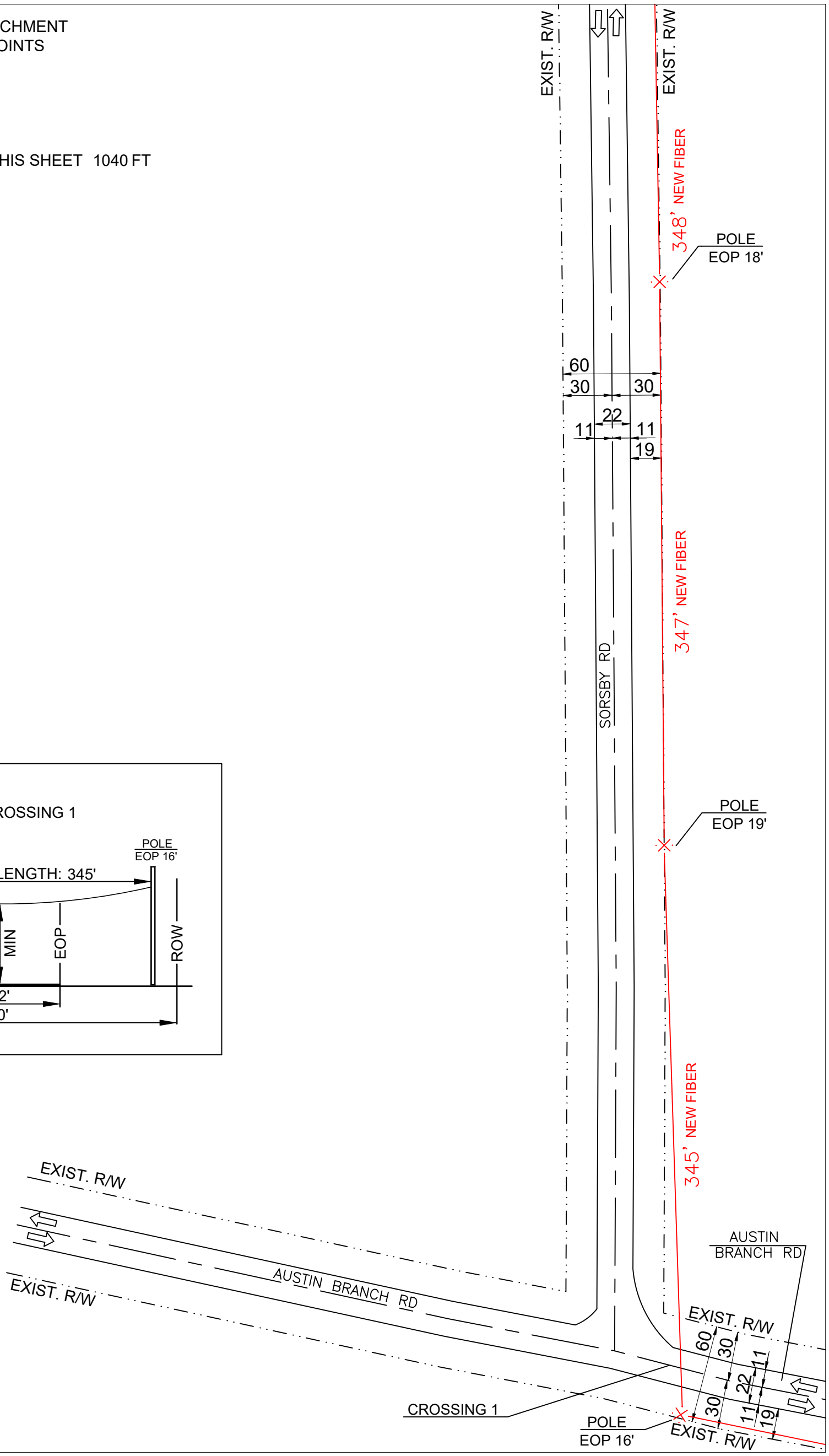


NO MATCH SHEET

MATCH SHEET 8

| | | | | |
|---|---|---|---|---|
| PREPARED BY: | EXISTING POLE<br>PROPOSED PEDESTAL<br>WATER VALVE<br>FIBER MARKER<br>GAS MARKER<br>MANHOLE<br>SEWER MANHOLE<br>STORM DRAIN | RIGHT OF WAY LINE<br>IRRIGATION LINE<br>WATER LANE<br>GAS LANE<br>EXISTING ANCHOR<br>25 PROPOSED RISER | PROPOSED COAXIAL CABLE<br>PROPOSED FIBER CABLE<br>PROPOSED DIRECTIONAL BORE<br>EXISTING CABLE | ENGINEERED FOR: |
| QUASAR, INC. | LEGEND:<br>RW - RIGHT OF WAY<br>EOP - EDGE OF PAVEMENT<br>DW - DRIVEWAY<br>PDW - PAVED DRIVEWAY | NOTES:<br>BORE HOLE TO BE FILLED SAME DAY<br>VAULT HOLE TO BE FILLED SAME DAY<br>ALL HOLE TO BE TAMPED AND SODDED | N W E S | COMCAST |

WALLER COUNTY

SORSBY RD
AUSTIN BRANCH RD

TRANSPORT FIBER

NO SCALE | SHEET 7 OF 30

NO MATCH SHEET

PROPOSED COMCAST NEW ATTACHMENT
18' MINIMUM HEIGHT AT ALL POINTS
432CT FIBER CABLE

INSTALLATION LENGTH IN RW ON THIS SHEET 847 FT

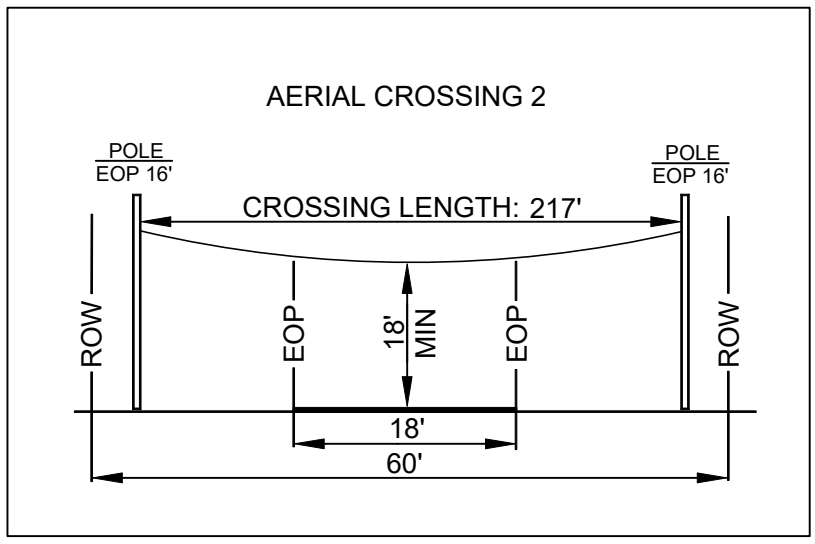


MATCH SHEET 7

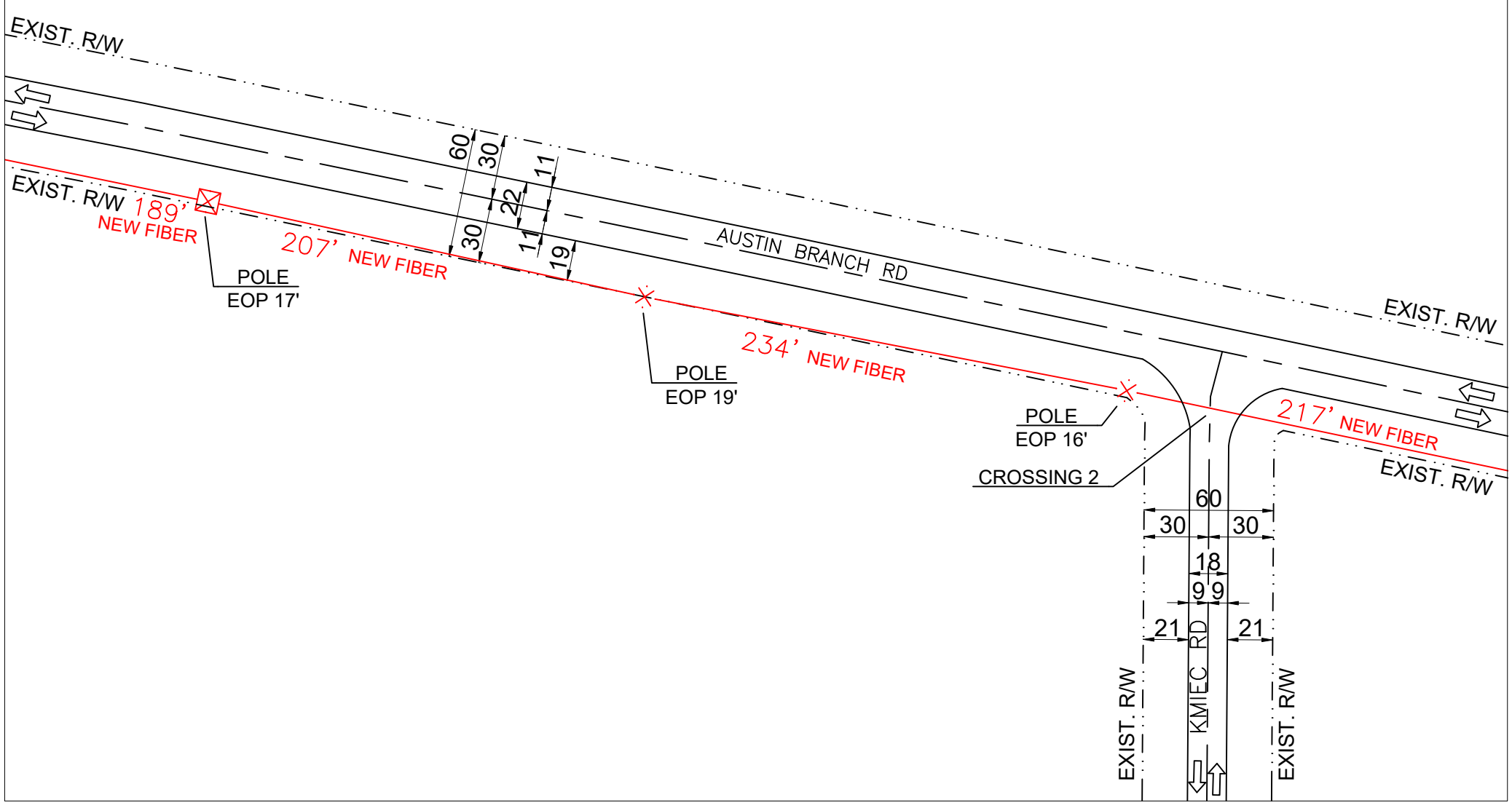


MATCH SHEET 9

NO MATCH SHEET

PREPARED BY:

QUASAR, INC.

EXISTING POLE
PROPOSED PEDESTAL
WATER VALVE
FIBER MARKER
GAS MARKER
MANHOLE
SEWER MANHOLE
STORM DRAIN

RIGHT OF WAY LINE
IRRIGATION LINE
WATER LANE
GAS LANE
EXISTING ANCHOR
25 PROPOSED RISER

PROPOSED COAXIAL CABLE
PROPOSED FIBER CABLE
PROPOSED DIRECTIONAL BORE
EXISTING CABLE

LEGEND:
RW - RIGHT OF WAY
EOP - EDGE OF PAVEMENT
DW - DRIVEWAY
PDW - PAVED DRIVEWAY

NOTES:
BORE HOLE TO BE FILLED SAME DAY
VAULT HOLE TO BE FILLED SAME DAY
ALL HOLE TO BE TAMPED AND SODDED

N
W E
S

ENGINEERED FOR:

COMCAST

WALLER COUNTY

AUSTIN BRANCH RD
KMIEC RD

TRANSPORT FIBER

NO SCALE

SHEET 8 OF 30

NO MATCH SHEET

PROPOSED COMCAST NEW ATTACHMENT
18' MINIMUM HEIGHT AT ALL POINTS
432CT FIBER CABLE

INSTALLATION LENGTH IN RW ON THIS SHEET 764 FT

MATCH SHEET 8

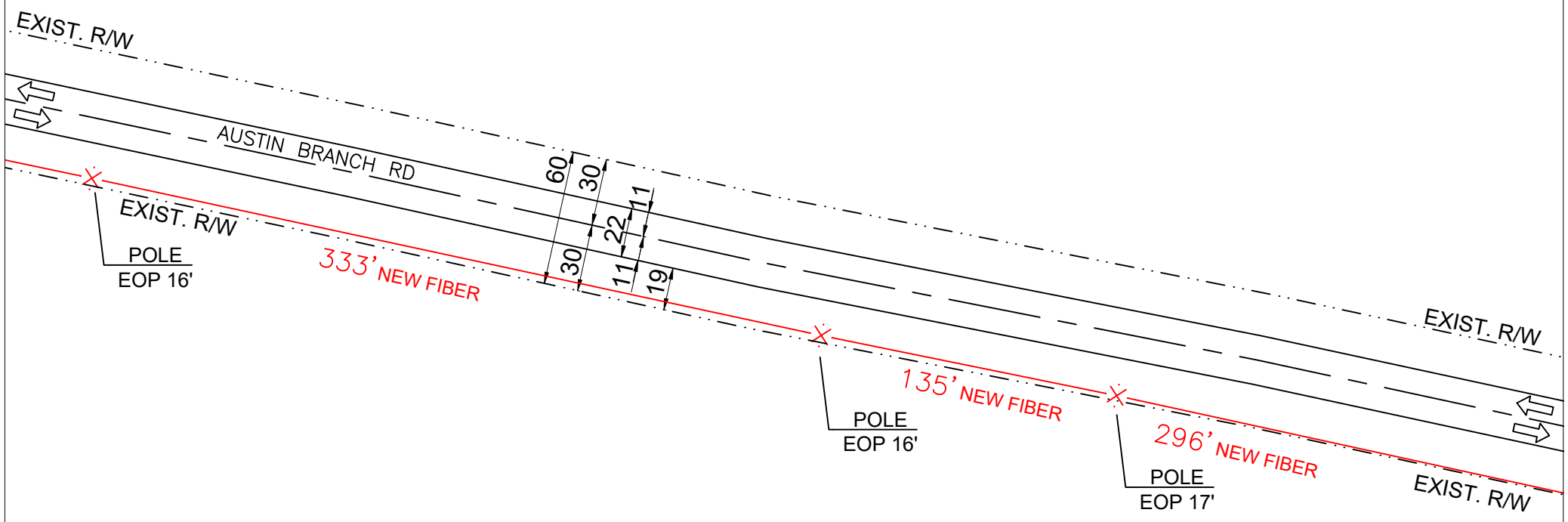


MATCH SHEET 10

NO MATCH SHEET

PREPARED BY:

QUASAR, INC.

EXISTING POLE
PROPOSED PEDESTAL
WATER VALVE
FIBER MARKER
GAS MARKER
MANHOLE
SEWER MANHOLE
STORM DRAIN

RIGHT OF WAY LINE
IRRIGATION LINE
WATER LANE
GAS LANE
EXISTING ANCHOR
R 25 PROPOSED RISER

PROPOSED COAXIAL CABLE
PROPOSED FIBER CABLE
PROPOSED DIRECTIONAL BORE
EXISTING CABLE

LEGEND:
RW - RIGHT OF WAY
EOP - EDGE OF PAVEMENT
DW - DRIVEWAY
PDW - PAVED DRIVEWAY

NOTES:
BORE HOLE TO BE FILLED SAME DAY
VAULT HOLE TO BE FILLED SAME DAY
ALL HOLE TO BE TAMPED AND SODDED

N
W E
S

ENGINEERED FOR:

COMCAST

WALLER COUNTY

AUSTIN BRANCH RD

TRANSPORT FIBER

NO SCALE

SHEET 9 OF 30

NO MATCH SHEET

PROPOSED COMCAST NEW ATTACHMENT
18' MINIMUM HEIGHT AT ALL POINTS
432CT FIBER CABLE

INSTALLATION LENGTH IN RW ON THIS SHEET 582 FT

MATCH SHEET 9

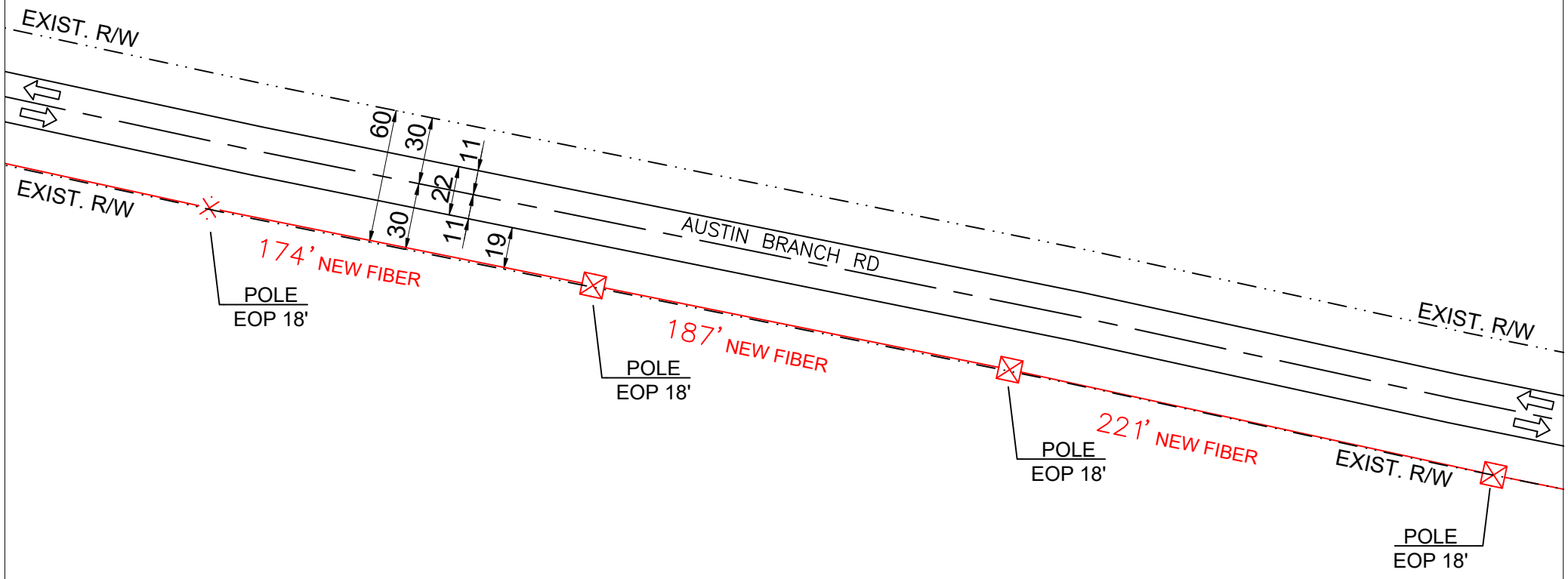


MATCH SHEET 11

NO MATCH SHEET

PREPARED BY:

QUASAR, INC.

EXISTING POLE
PROPOSED PEDESTAL
WATER VALVE
FIBER MARKER
GAS MARKER
MANHOLE
SEWER MANHOLE
STORM DRAIN

RIGHT OF WAY LINE
IRRIGATION LINE
WATER LANE
GAS LANE
EXISTING ANCHOR
R 25 PROPOSED RISER

PROPOSED COAXIAL CABLE
PROPOSED FIBER CABLE
PROPOSED DIRECTIONAL BORE
EXISTING CABLE

LEGEND:
RW - RIGHT OF WAY
EOP - EDGE OF PAVEMENT
DW - DRIVEWAY
PDW - PAVED DRIVEWAY

NOTES:
BORE HOLE TO BE FILLED SAME DAY
VAULT HOLE TO BE FILLED SAME DAY
ALL HOLE TO BE TAMPED AND SODDED

N
W E
S

ENGINEERED FOR:

COMCAST

WALLER COUNTY
AUSTIN BRANCH RD
TRANSPORT FIBER

NO SCALE | SHEET 10 OF 30

NO MATCH SHEET

PROPOSED COMCAST NEW ATTACHMENT
18' MINIMUM HEIGHT AT ALL POINTS
432CT FIBER CABLE

INSTALLATION LENGTH IN RW ON THIS SHEET 596 FT

MATCH SHEET 10

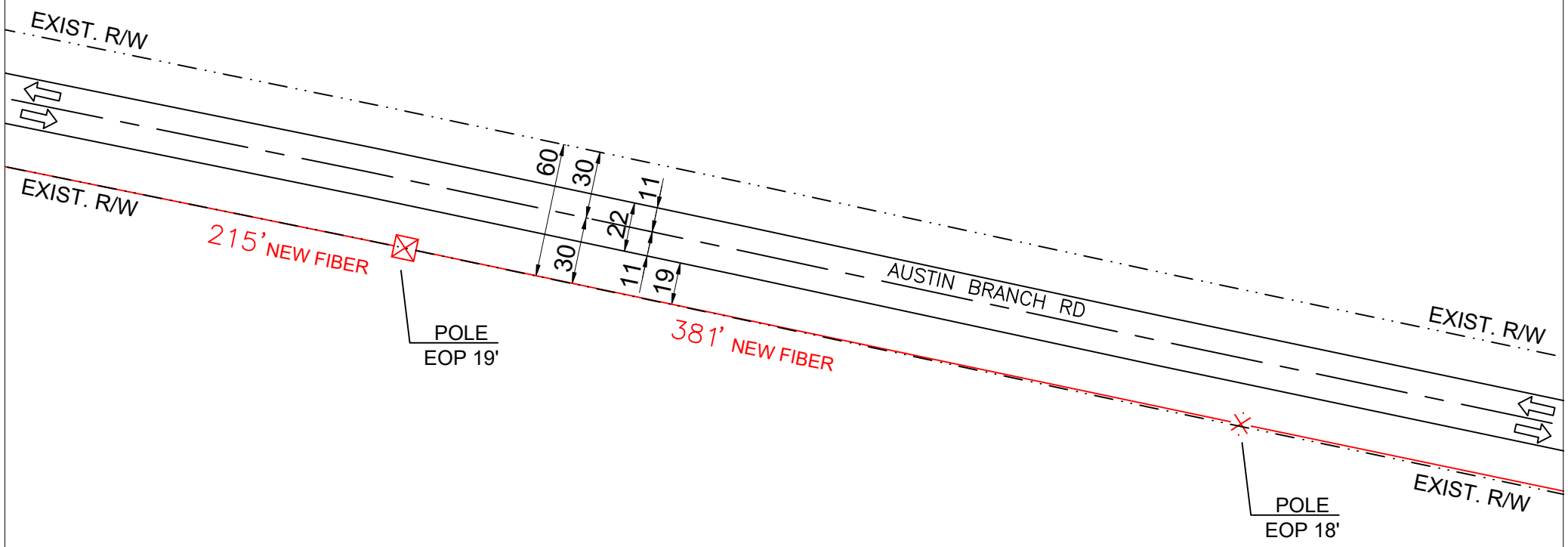


MATCH SHEET 12

NO MATCH SHEET

PREPARED BY:

QUASAR, INC.

EXISTING POLE
PROPOSED PEDESTAL
WATER VALVE
FIBER MARKER
GAS MARKER
MANHOLE
SEWER MANHOLE
STORM DRAIN

RIGHT OF WAY LINE
IRRIGATION LINE
WATER LANE
GAS LANE
EXISTING ANCHOR
R 25 PROPOSED RISER

PROPOSED COAXIAL CABLE
PROPOSED FIBER CABLE
PROPOSED DIRECTIONAL BORE
EXISTING CABLE

LEGEND:
RW - RIGHT OF WAY
EOP - EDGE OF PAVEMENT
DW - DRIVEWAY
PDW - PAVED DRIVEWAY

NOTES:
BORE HOLE TO BE FILLED SAME DAY
VAULT HOLE TO BE FILLED SAME DAY
ALL HOLE TO BE TAMPED AND SODDED

N
W E
S

ENGINEERED FOR:

COMCAST

WALLER COUNTY
AUSTIN BRANCH RD
TRANSPORT FIBER

NO SCALE | SHEET 11 OF 30

NO MATCH SHEET

PROPOSED COMCAST NEW ATTACHMENT
18' MINIMUM HEIGHT AT ALL POINTS
432CT FIBER CABLE

INSTALLATION LENGTH IN RW ON THIS SHEET 769 FT

MATCH SHEET 11

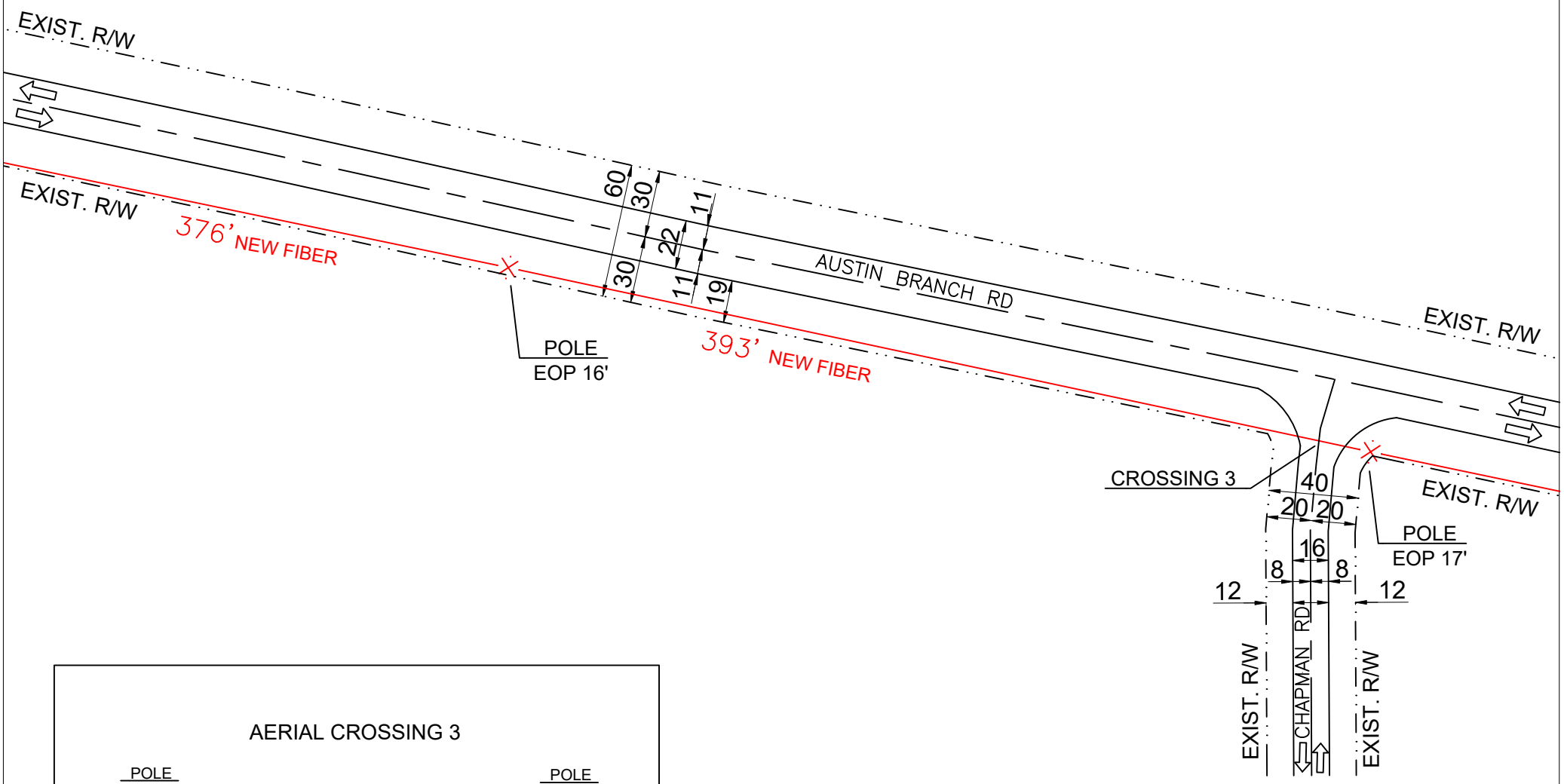


MATCH SHEET 13

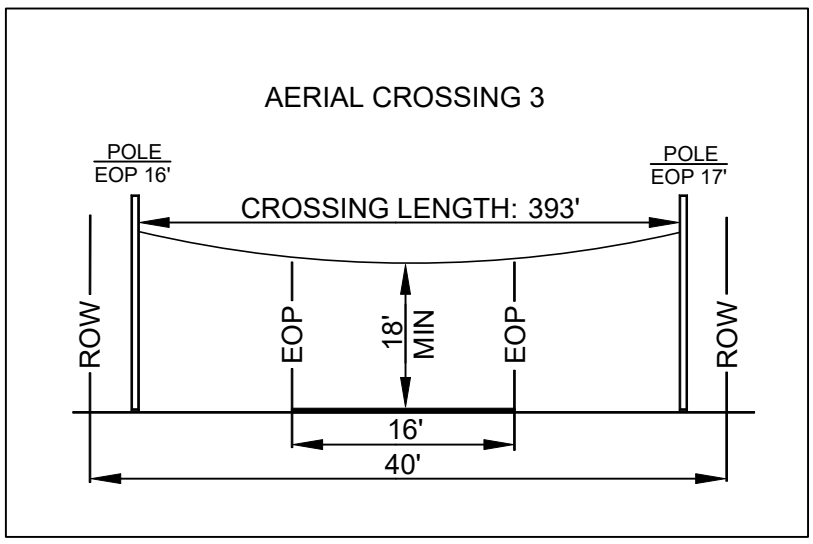


NO MATCH SHEET

PREPARED BY:

QUASAR, INC.

EXISTING POLE
PROPOSED PEDESTAL
WATER VALVE
FIBER MARKER
GAS MARKER
MANHOLE
SEWER MANHOLE
STORM DRAIN

RIGHT OF WAY LINE
IRRIGATION LINE
WATER LANE
GAS LANE
EXISTING ANCHOR
25 PROPOSED RISER

PROPOSED COAXIAL CABLE
PROPOSED FIBER CABLE
PROPOSED DIRECTIONAL BORE
EXISTING CABLE

LEGEND:
RW - RIGHT OF WAY
EOP - EDGE OF PAVEMENT
DW - DRIVEWAY
PDW - PAVED DRIVEWAY

NOTES:
BORE HOLE TO BE FILLED SAME DAY
VAULT HOLE TO BE FILLED SAME DAY
ALL HOLE TO BE TAMPED AND SODDED

N
W
E
S

ENGINEERED FOR:

COMCAST

WALLER COUNTY

AUSTIN BRANCH RD
CHAPMAN RD

TRANSPORT FIBER

NO SCALE

SHEET 12 OF 30

NO MATCH SHEET

PROPOSED COMCAST NEW ATTACHMENT
18' MINIMUM HEIGHT AT ALL POINTS
432CT FIBER CABLE

INSTALLATION LENGTH IN RW ON THIS SHEET 790 FT

MATCH SHEET 12

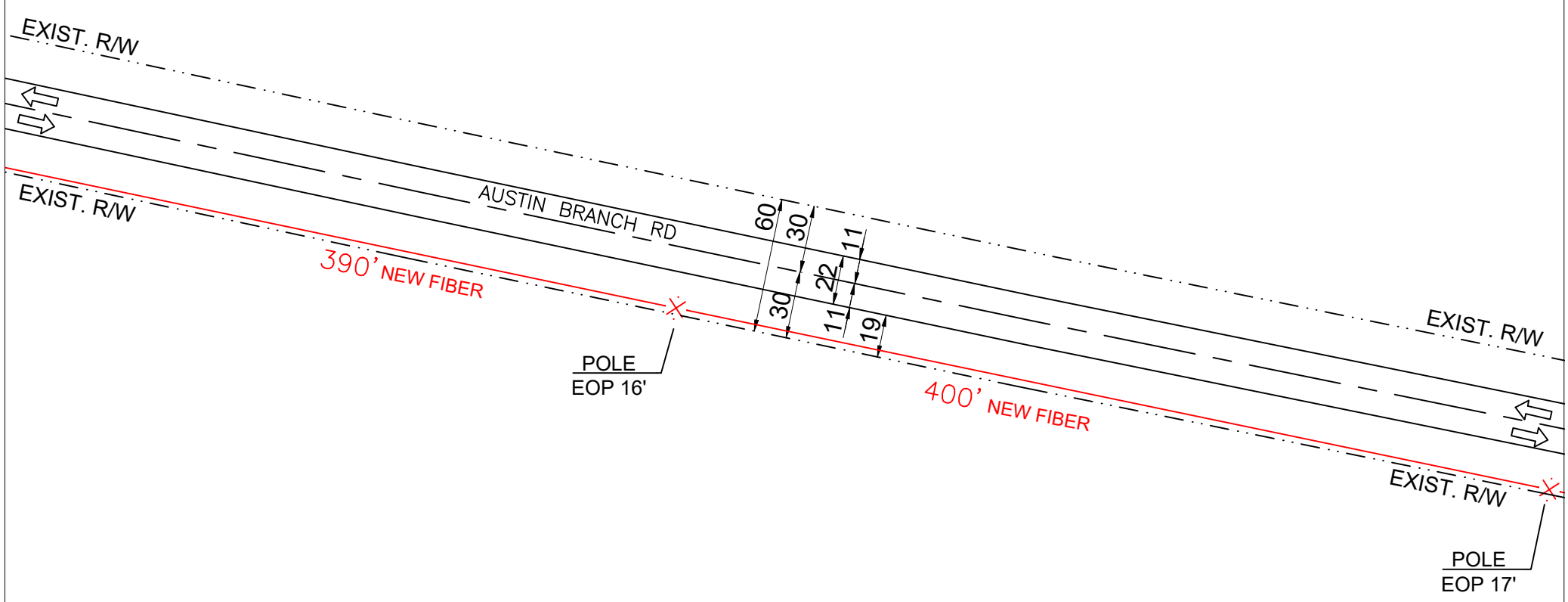


MATCH SHEET 14

NO MATCH SHEET

PREPARED BY:

QUASAR, INC.

EXISTING POLE
PROPOSED PEDESTAL
WATER VALVE
FIBER MARKER
GAS MARKER
MANHOLE
SEWER MANHOLE
STORM DRAIN

RIGHT OF WAY LINE
IRRIGATION LINE
WATER LANE
GAS LANE
EXISTING ANCHOR
R 25 PROPOSED RISER

PROPOSED COAXIAL CABLE
PROPOSED FIBER CABLE
PROPOSED DIRECTIONAL BORE
EXISTING CABLE

LEGEND:
RW - RIGHT OF WAY
EOP - EDGE OF PAVEMENT
DW - DRIVEWAY
PDW - PAVED DRIVEWAY

NOTES:
BORE HOLE TO BE FILLED SAME DAY
VAULT HOLE TO BE FILLED SAME DAY
ALL HOLE TO BE TAMPED AND SODDED

N
W E
S

ENGINEERED FOR:

COMCAST

WALLER COUNTY

AUSTIN BRANCH RD

TRANSPORT FIBER

NO SCALE

SHEET 13 OF 30

NO MATCH SHEET

PROPOSED COMCAST NEW ATTACHMENT
18' MINIMUM HEIGHT AT ALL POINTS
432CT FIBER CABLE

INSTALLATION LENGTH IN RW ON THIS SHEET 630 FT

MATCH SHEET 13

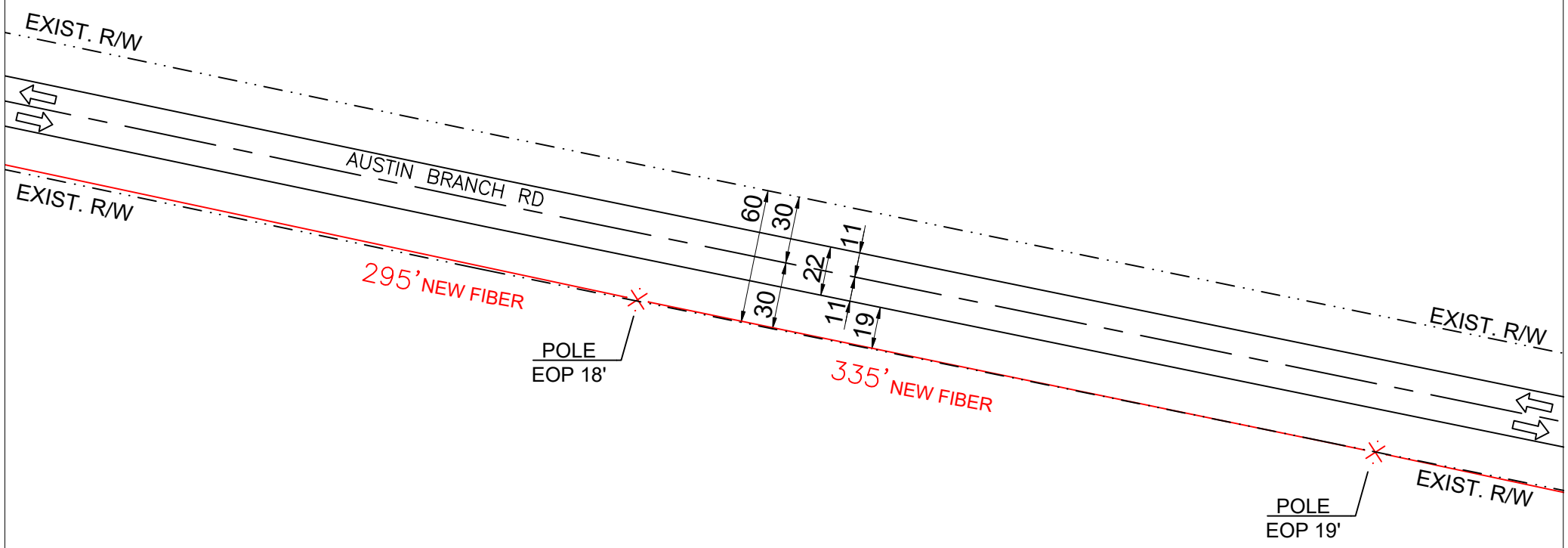


MATCH SHEET 15

NO MATCH SHEET

| | | | | |
|---|---|---|---|---|
| PREPARED BY: | EXISTING POLE<br>PROPOSED PEDESTAL<br>WATER VALVE<br>FIBER MARKER<br>GAS MARKER<br>MANHOLE<br>SEWER MANHOLE<br>STORM DRAIN | RIGHT OF WAY LINE<br>IRRIGATION LINE<br>WATER LANE<br>GAS LANE<br>EXISTING ANCHOR<br>R 25 PROPOSED RISER | PROPOSED COAXIAL CABLE<br>PROPOSED FIBER CABLE<br>PROPOSED DIRECTIONAL BORE<br>EXISTING CABLE | ENGINEERED FOR: WALLER COUNTY<br>AUSTIN BRANCH RD<br>TRANSPORT FIBER |
| QUASAR, INC. | LEGEND:<br>RW - RIGHT OF WAY<br>EOP - EDGE OF PAVEMENT<br>DW - DRIVEWAY<br>PDW - PAVED DRIVEWAY | NOTES:<br>BORE HOLE TO BE FILLED SAME DAY<br>VAULT HOLE TO BE FILLED SAME DAY<br>ALL HOLE TO BE TAMPED AND SODDED | N W E S | COMCAST<br>NO SCALE / SHEET 14 OF 30 |

NO MATCH SHEET

PROPOSED COMCAST NEW ATTACHMENT
18' MINIMUM HEIGHT AT ALL POINTS
432CT FIBER CABLE

INSTALLATION LENGTH IN RW ON THIS SHEET 928 FT

MATCH SHEET 14

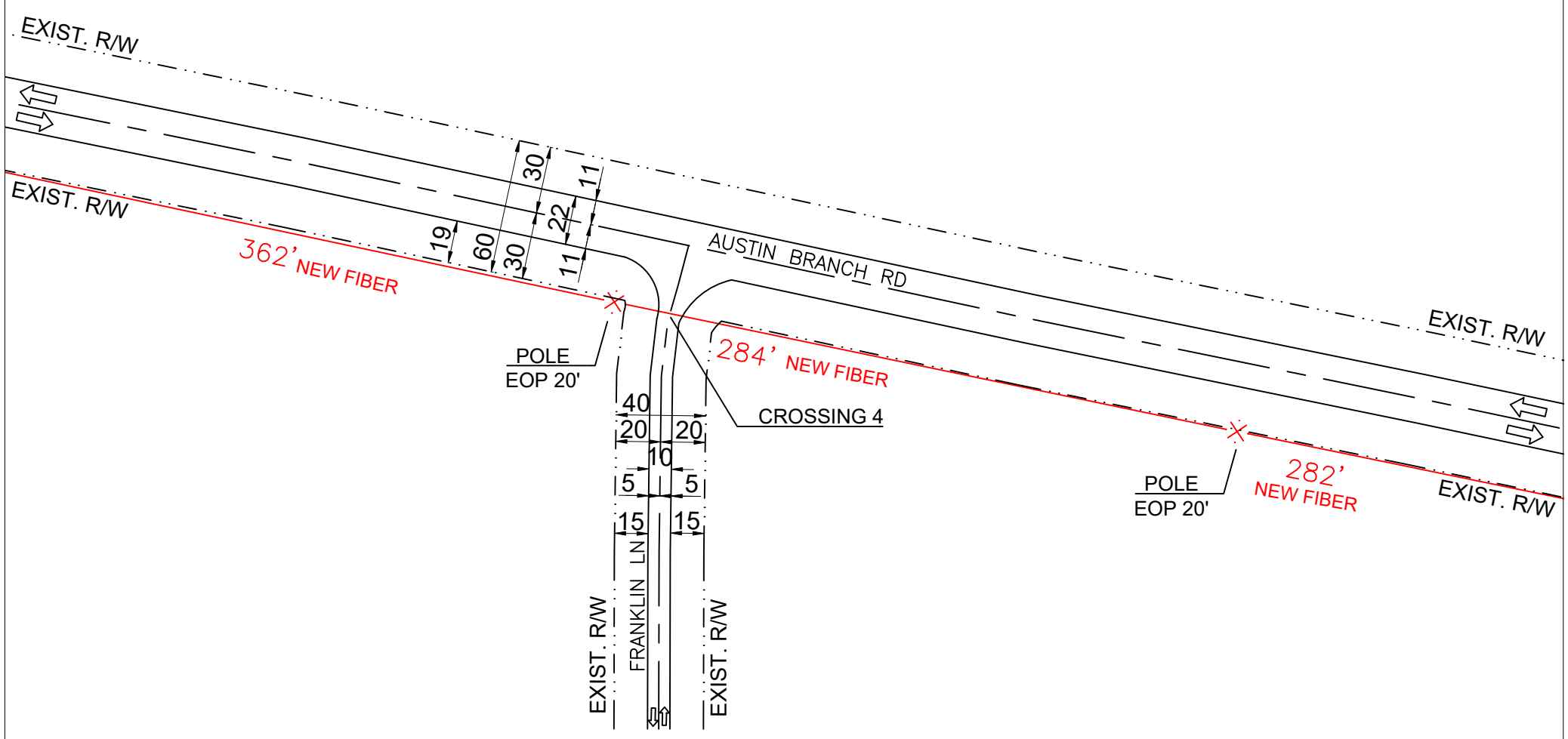


MATCH SHEET 16

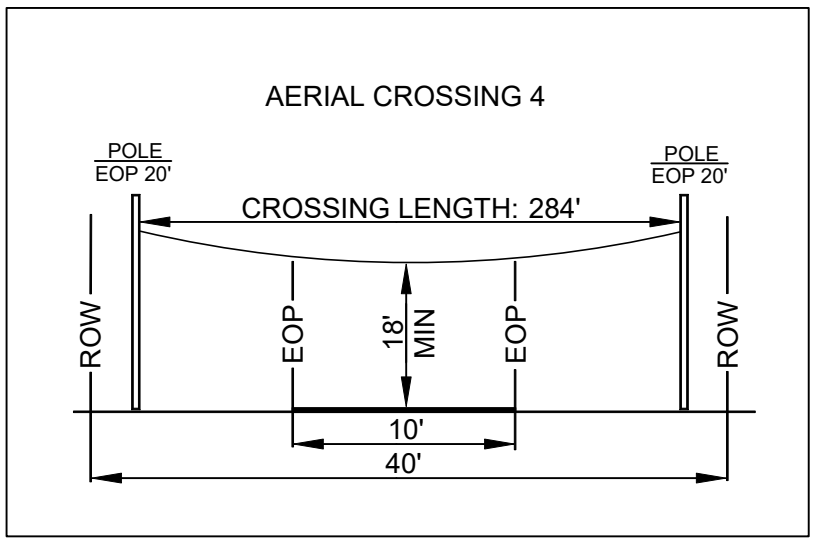


NO MATCH SHEET

PREPARED BY:

QUASAR, INC.

EXISTING POLE
PROPOSED PEDESTAL
WATER VALVE
FIBER MARKER
GAS MARKER
MANHOLE
SEWER MANHOLE
STORM DRAIN

RIGHT OF WAY LINE
IRRIGATION LINE
WATER LANE
GAS LANE
EXISTING ANCHOR
PROPOSED RISER

PROPOSED COAXIAL CABLE
PROPOSED FIBER CABLE
PROPOSED DIRECTIONAL BORE
EXISTING CABLE

LEGEND:
RW - RIGHT OF WAY
EOP - EDGE OF PAVEMENT
DW - DRIVEWAY
PDW - PAVED DRIVEWAY

NOTES:
BORE HOLE TO BE FILLED SAME DAY
VAULT HOLE TO BE FILLED SAME DAY
ALL HOLE TO BE TAMPED AND SODDED

N
W
E
S

ENGINEERED FOR:

COMCAST

WALLER COUNTY

AUSTIN BRANCH RD
FRANKLIN LN

TRANSPORT FIBER

NO SCALE

SHEET 15 OF 30

NO MATCH SHEET

PROPOSED COMCAST NEW ATTACHMENT
18' MINIMUM HEIGHT AT ALL POINTS
432CT FIBER CABLE

INSTALLATION LENGTH IN RW ON THIS SHEET 730 FT

MATCH SHEET 15

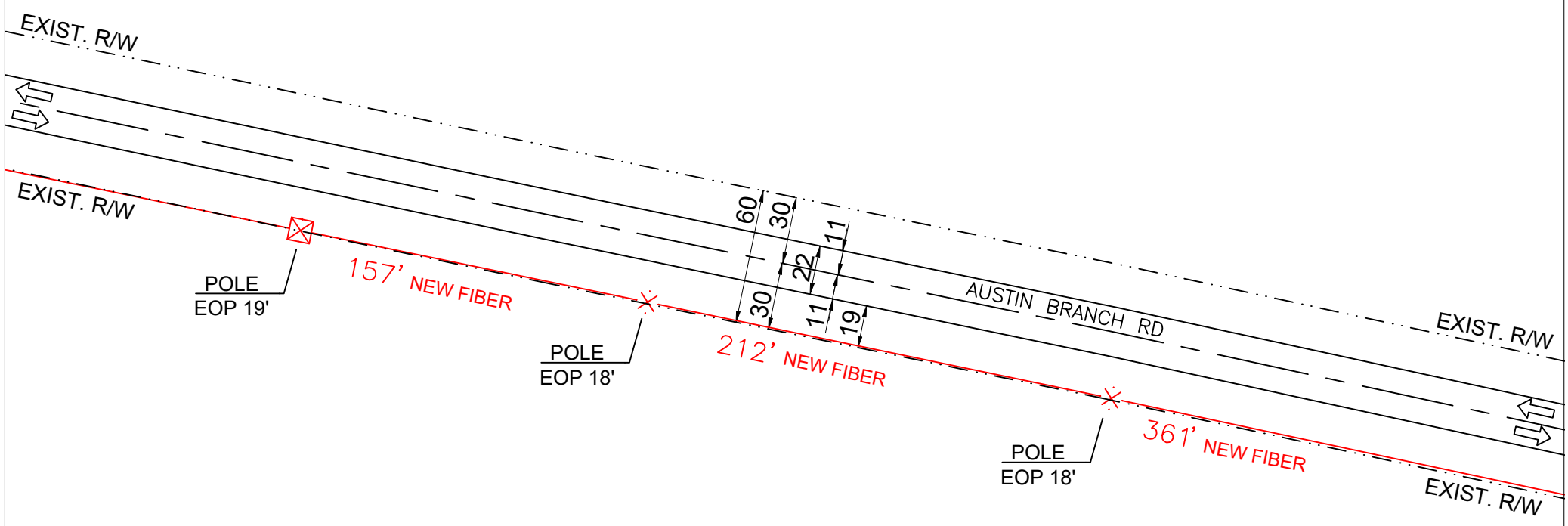


MATCH SHEET 17

NO MATCH SHEET

PREPARED BY:

QUASAR, INC.

EXISTING POLE
PROPOSED PEDESTAL
WATER VALVE
FIBER MARKER
GAS MARKER
MANHOLE
SEWER MANHOLE
STORM DRAIN

RIGHT OF WAY LINE
IRRIGATION LINE
WATER LANE
GAS LANE
EXISTING ANCHOR
R 25 PROPOSED RISER

PROPOSED COAXIAL CABLE
PROPOSED FIBER CABLE
PROPOSED DIRECTIONAL BORE
EXISTING CABLE

LEGEND:
RW - RIGHT OF WAY
EOP - EDGE OF PAVEMENT
DW - DRIVEWAY
PDW - PAVED DRIVEWAY

NOTES:
BORE HOLE TO BE FILLED SAME DAY
VAULT HOLE TO BE FILLED SAME DAY
ALL HOLE TO BE TAMPED AND SODDED

N
W E
S

ENGINEERED FOR:

COMCAST

WALLER COUNTY
AUSTIN BRANCH RD
TRANSPORT FIBER

NO SCALE

SHEET 16 OF 30

PROPOSED COMCAST NEW ATTACHMENT
18' MINIMUM HEIGHT AT ALL POINTS
432CT FIBER CABLE

INSTALLATION LENGTH IN RW ON THIS SHEET 679 FT

MATCH SHEET 16

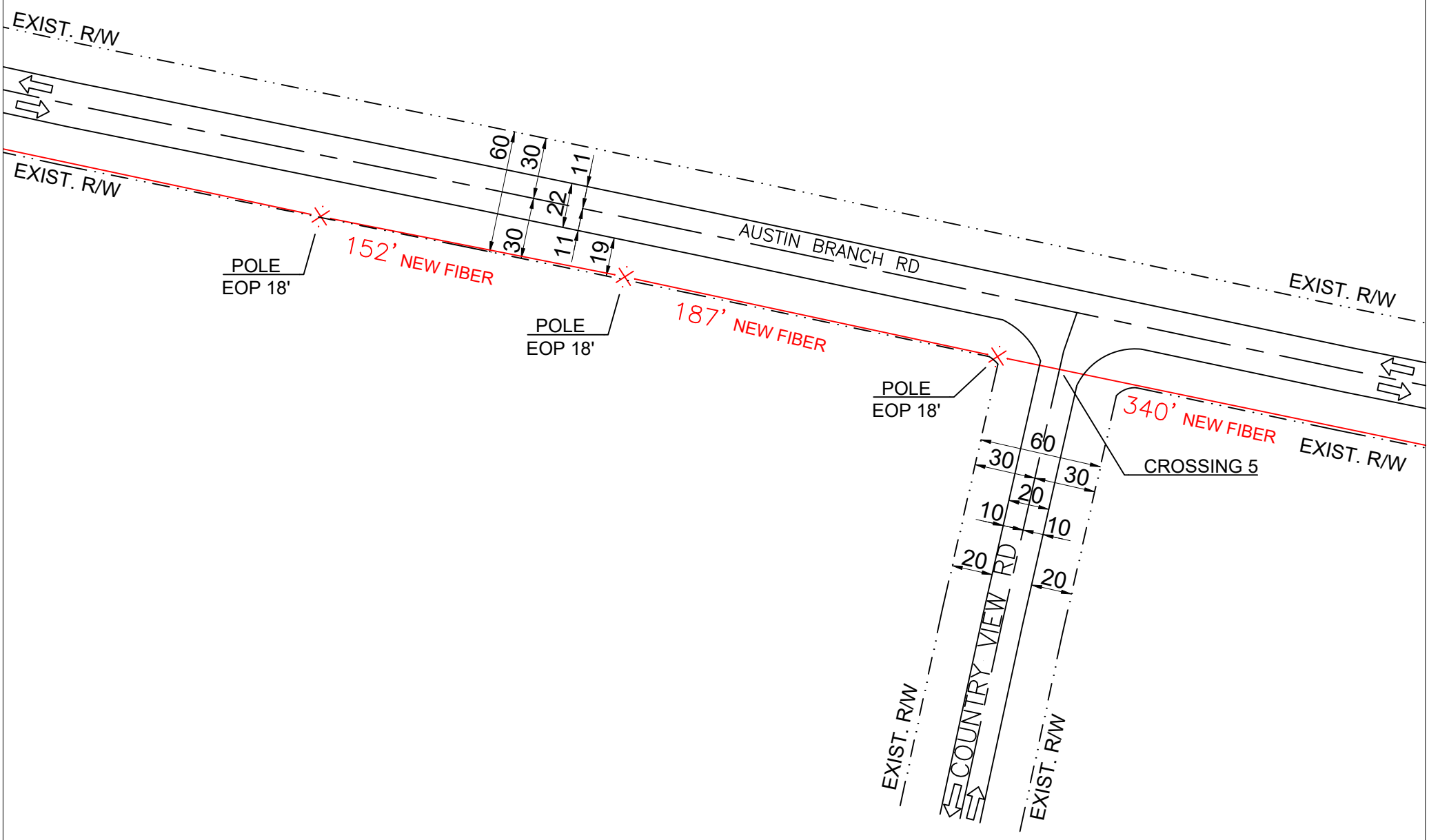


MATCH SHEET 18

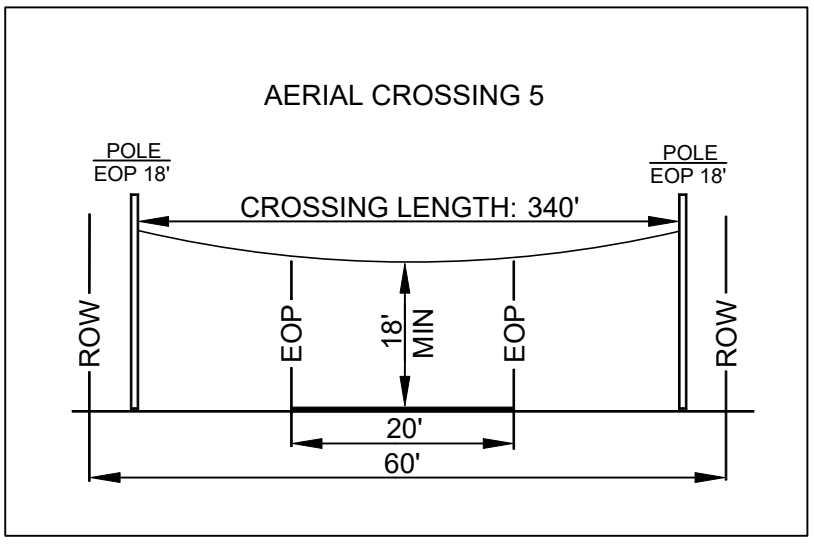




PREPARED BY:

QUASAR, INC.

EXISTING POLE
PROPOSED PEDESTAL
WATER VALVE
FIBER MARKER
GAS MARKER
MANHOLE
SEWER MANHOLE
STORM DRAIN

RIGHT OF WAY LINE
IRRIGATION LINE
WATER LANE
GAS LANE
EXISTING ANCHOR
PROPOSED RISER

PROPOSED COAXIAL CABLE
PROPOSED FIBER CABLE
PROPOSED DIRECTIONAL BORE
EXISTING CABLE

LEGEND:
RW - RIGHT OF WAY
EOP - EDGE OF PAVEMENT
DW - DRIVEWAY
PDW - PAVED DRIVEWAY

NOTES:
BORE HOLE TO BE FILLED SAME DAY
VAULT HOLE TO BE FILLED SAME DAY
ALL HOLE TO BE TAMPED AND SODDED

N
W
E
S

ENGINEERED FOR:

COMCAST

WALLER COUNTY

AUSTIN BRANCH RD
COUNTRY VIEW RD

TRANSPORT FIBER

NO SCALE

SHEET 17 OF 30

NO MATCH SHEET

PROPOSED COMCAST NEW ATTACHMENT
18' MINIMUM HEIGHT AT ALL POINTS
432CT FIBER CABLE

INSTALLATION LENGTH IN RW ON THIS SHEET 628 FT

MATCH SHEET 17

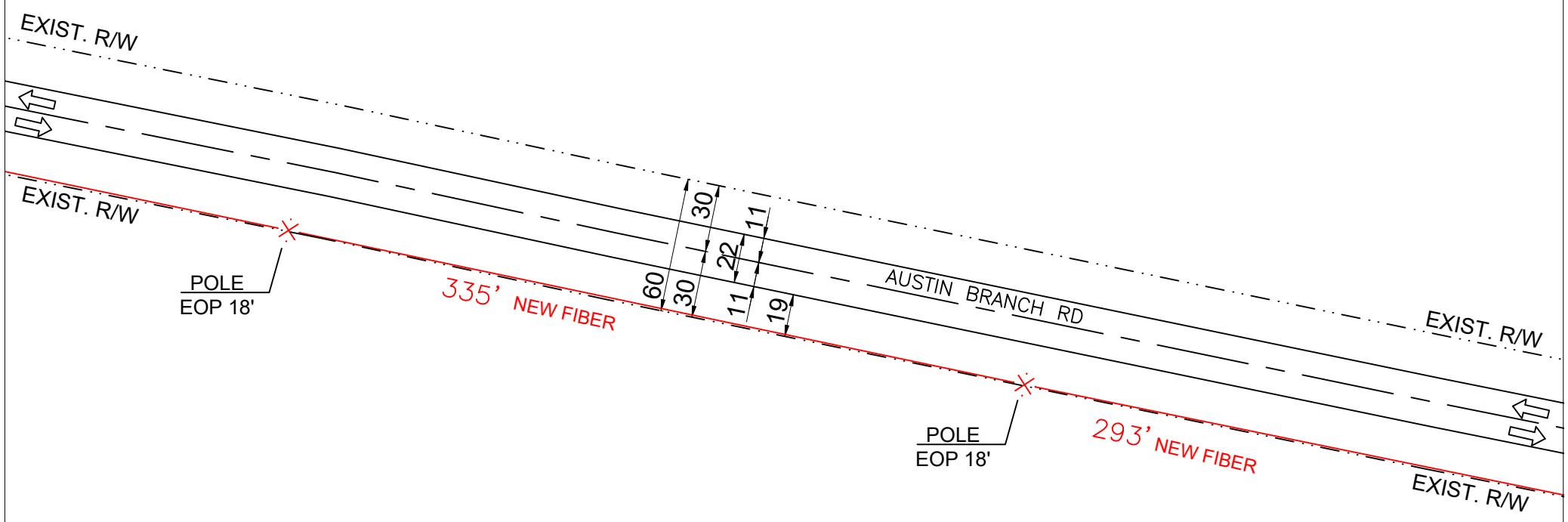


MATCH SHEET 19

NO MATCH SHEET

PREPARED BY:

QUASAR, INC.

EXISTING POLE
PROPOSED PEDESTAL
WATER VALVE
FIBER MARKER
GAS MARKER
MANHOLE
SEWER MANHOLE
STORM DRAIN

RIGHT OF WAY LINE
IRRIGATION LINE
WATER LANE
GAS LANE
EXISTING ANCHOR
R 25 PROPOSED RISER

PROPOSED COAXIAL CABLE
PROPOSED FIBER CABLE
PROPOSED DIRECTIONAL BORE
EXISTING CABLE

LEGEND:
RW - RIGHT OF WAY
EOP - EDGE OF PAVEMENT
DW - DRIVEWAY
PDW - PAVED DRIVEWAY

NOTES:
BORE HOLE TO BE FILLED SAME DAY
VAULT HOLE TO BE FILLED SAME DAY
ALL HOLE TO BE TAMPED AND SODDED

N
W E
S

ENGINEERED FOR:

COMCAST

WALLER COUNTY
AUSTIN BRANCH RD
TRANSPORT FIBER

NO SCALE

SHEET 18 OF 30

PROPOSED COMCAST NEW ATTACHMENT
18' MINIMUM HEIGHT AT ALL POINTS
432CT FIBER CABLE

INSTALLATION LENGTH IN RW ON THIS SHEET 724 FT

MATCH SHEET 18

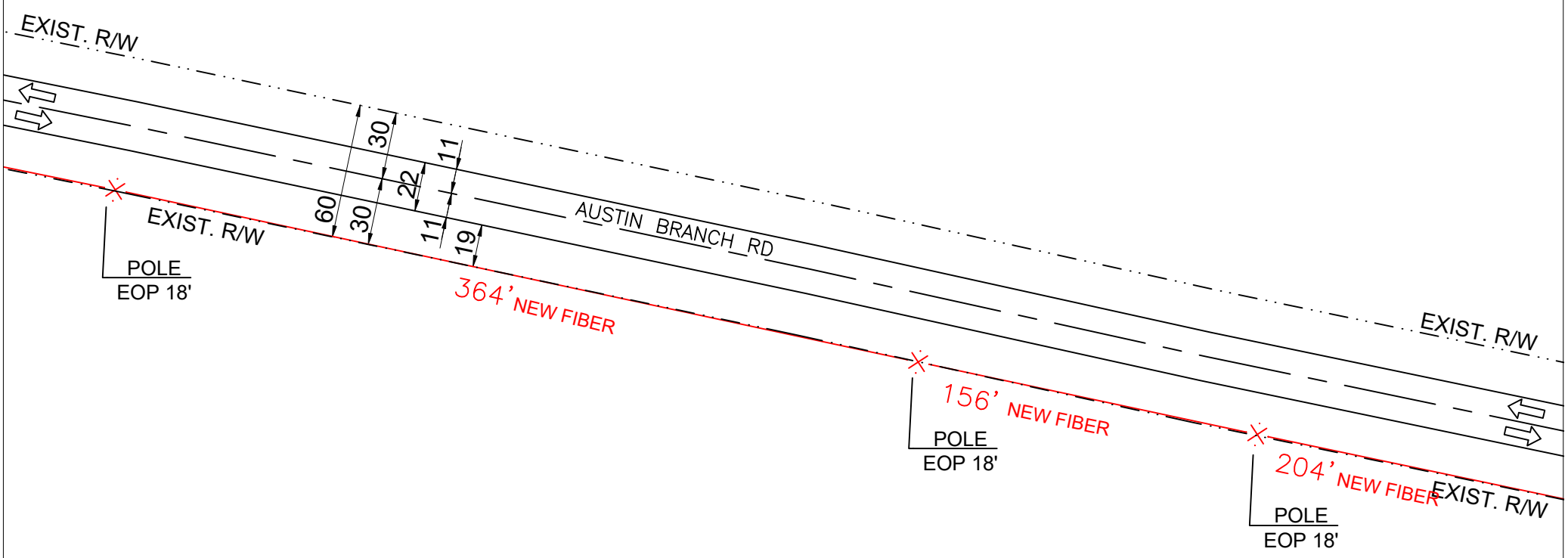


MATCH SHEET 20



PREPARED BY:

QUASAR, INC.

EXISTING POLE
PROPOSED PEDESTAL
WATER VALVE
FIBER MARKER
GAS MARKER
MANHOLE
SEWER MANHOLE
STORM DRAIN

RIGHT OF WAY LINE
IRRIGATION LINE
WATER LANE
GAS LANE
EXISTING ANCHOR
R 25 PROPOSED RISER

PROPOSED COAXIAL CABLE
PROPOSED FIBER CABLE
PROPOSED DIRECTIONAL BORE
EXISTING CABLE

LEGEND:
RW - RIGHT OF WAY
EOP - EDGE OF PAVEMENT
DW - DRIVEWAY
PDW - PAVED DRIVEWAY

NOTES:
BORE HOLE TO BE FILLED SAME DAY
VAULT HOLE TO BE FILLED SAME DAY
ALL HOLE TO BE TAMPED AND SODDED

N
W E
S

ENGINEERED FOR:

COMCAST

WALLER COUNTY
AUSTIN BRANCH RD
TRANSPORT FIBER

NO SCALE | SHEET 19 OF 30

PROPOSED COMCAST NEW ATTACHMENT
18' MINIMUM HEIGHT AT ALL POINTS
432CT FIBER CABLE

INSTALLATION LENGTH IN RW ON THIS SHEET 667 FT

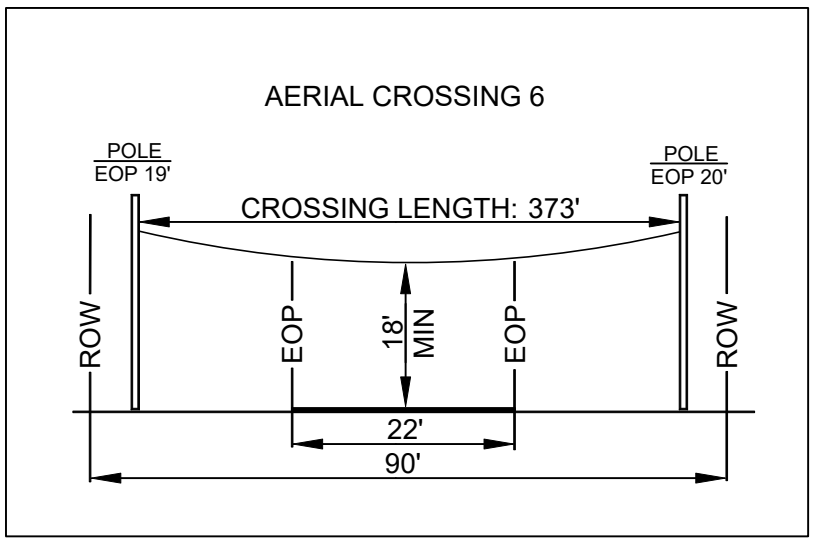




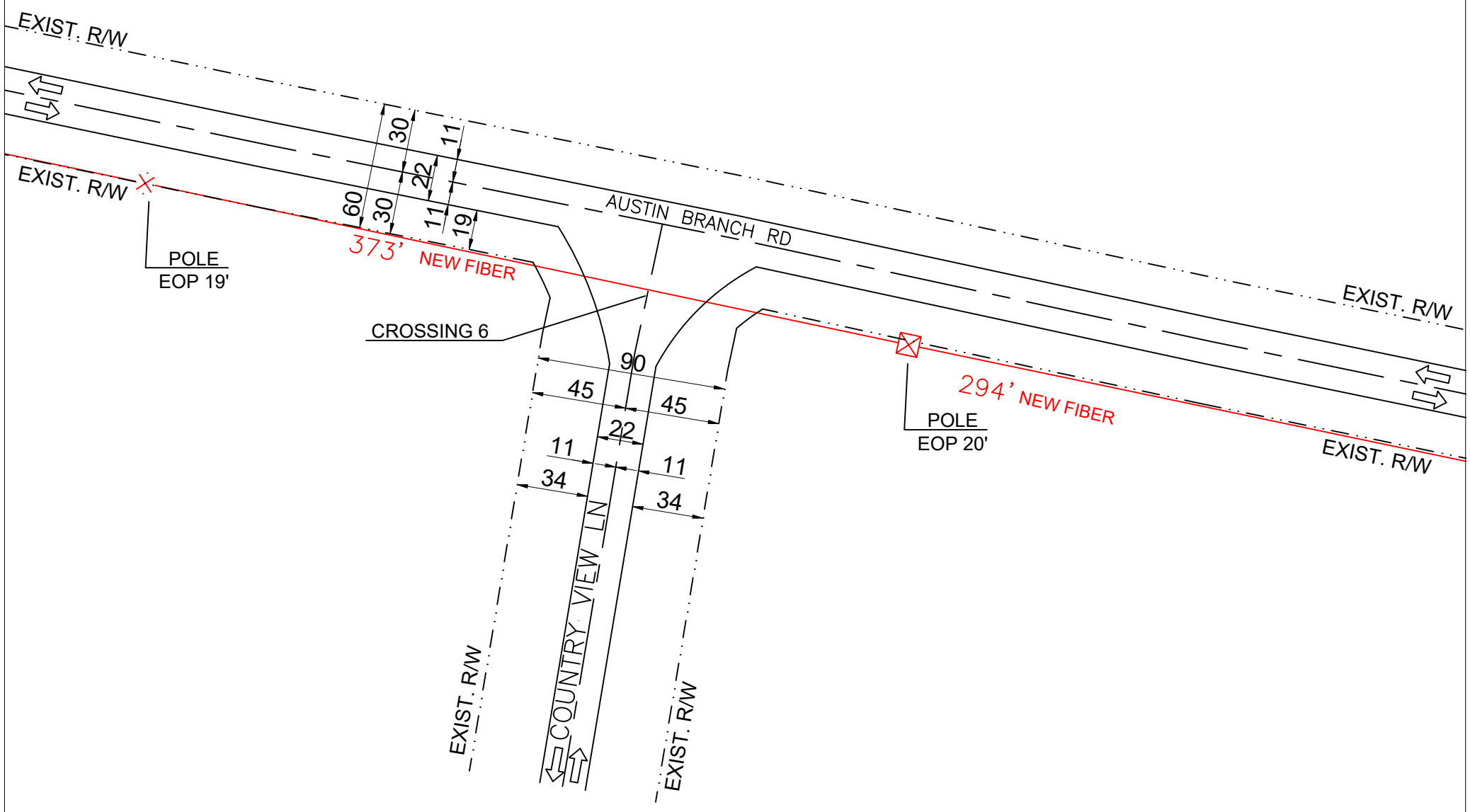






PREPARED BY:

QUASAR, INC.

EXISTING POLE
PROPOSED PEDESTAL
WATER VALVE
FIBER MARKER
GAS MARKER
MANHOLE
SEWER MANHOLE
STORM DRAIN

RIGHT OF WAY LINE
IRRIGATION LINE
WATER LANE
GAS LANE
EXISTING ANCHOR
PROPOSED RISER

PROPOSED COAXIAL CABLE
PROPOSED FIBER CABLE
PROPOSED DIRECTIONAL BORE
EXISTING CABLE

LEGEND:
RW - RIGHT OF WAY
EOP - EDGE OF PAVEMENT
DW - DRIVEWAY
PDW - PAVED DRIVEWAY

NOTES:
BORE HOLE TO BE FILLED SAME DAY
VAULT HOLE TO BE FILLED SAME DAY
ALL HOLE TO BE TAMPED AND SODDED

N
W
E
S

ENGINEERED FOR:

COMCAST

WALLER COUNTY

AUSTIN BRANCH RD
COUNTRY VIEW LN

TRANSPORT FIBER

NO SCALE

SHEET 20 OF 30

NO MATCH SHEET

PROPOSED COMCAST NEW ATTACHMENT
18' MINIMUM HEIGHT AT ALL POINTS
432CT FIBER CABLE

INSTALLATION LENGTH IN RW ON THIS SHEET 530 FT

MATCH SHEET 20

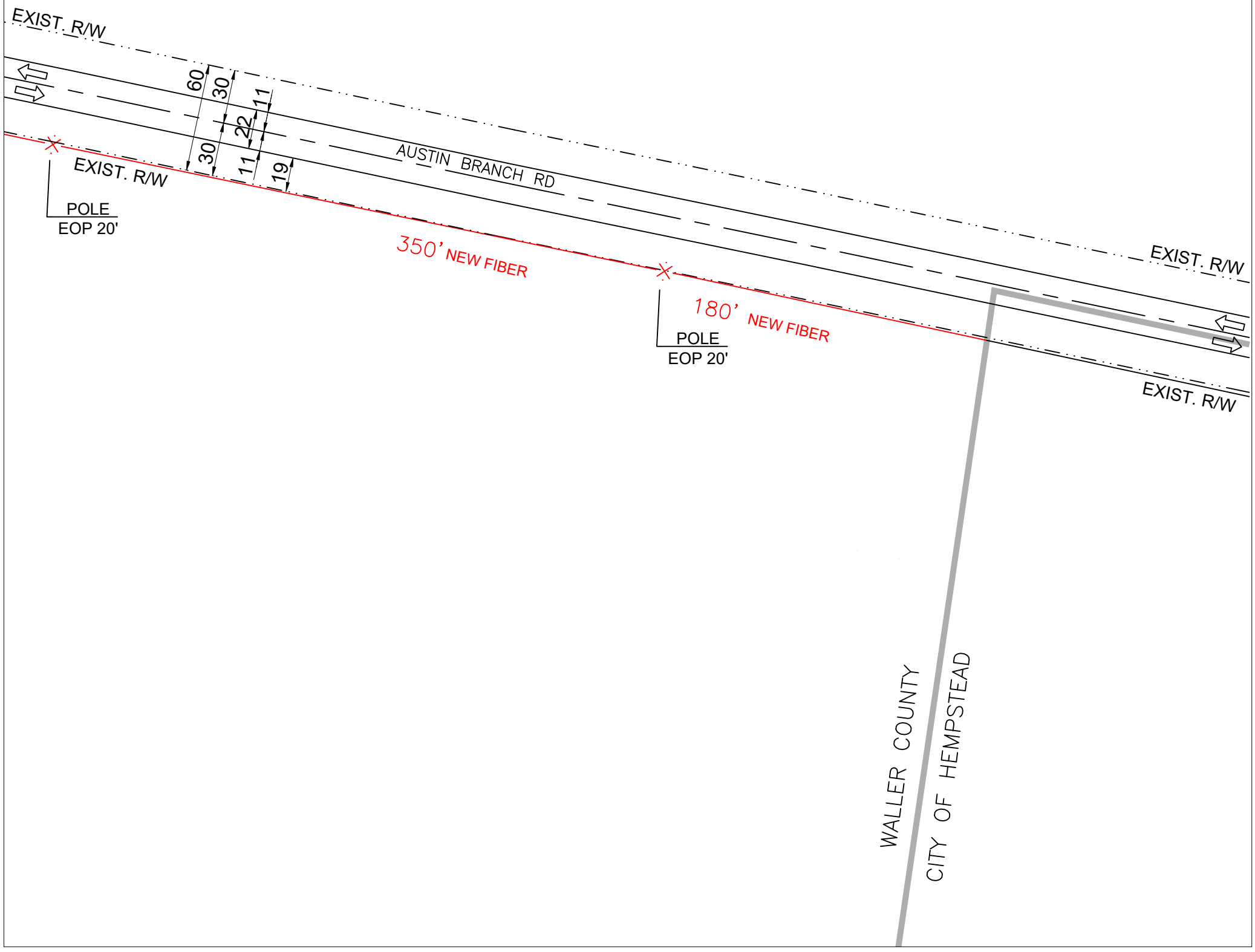


NO MATCH SHEET

NO MATCH SHEET

PREPARED BY:

QUASAR, INC.

EXISTING POLE
PROPOSED PEDESTAL
WATER VALVE
FIBER MARKER
GAS MARKER
MANHOLE
SEWER MANHOLE
STORM DRAIN

RIGHT OF WAY LINE
IRRIGATION LINE
WATER LANE
GAS LANE
EXISTING ANCHOR
R 25 PROPOSED RISER

PROPOSED COAXIAL CABLE
PROPOSED FIBER CABLE
PROPOSED DIRECTIONAL BORE
EXISTING CABLE

LEGEND:
RW - RIGHT OF WAY
EOP - EDGE OF PAVEMENT
DW - DRIVEWAY
PDW - PAVED DRIVEWAY

NOTES:
BORE HOLE TO BE FILLED SAME DAY
VAULT HOLE TO BE FILLED SAME DAY
ALL HOLE TO BE TAMPED AND SODDED

N
W E
S

ENGINEERED FOR:

COMCAST

WALLER COUNTY
AUSTIN BRANCH RD
TRANSPORT FIBER

NO SCALE

SHEET 21 OF 30

NO MATCH SHEET

NO MATCH SHEET

CITY OF PRAIRIE VIEW
WALLER COUNTY

JAMES R MUSE PKWY

EXIST. R/W

POLE
EOP 81'

40
140
100
27
28
14 14
87

PROPOSED COMCAST NEW ATTACHMENT
18' MINIMUM HEIGHT AT ALL POINTS
432CT FIBER CABLE

CROSSING 7

190'
NEW FIBER

POLE
EOP 77'

US-290 BUS

OLD HOUSTON HWY

BLINKA RD

CROSSING 8

NEW FIBER
51'

3
19
60
30
22
11
19
30
11

R25

POLE
EOP 13'

247' NEW FIBER

246' NEW FIBER

PROPOSED COMCAST UNDERGROUND
DIRECTIONAL BORE
4' MINIMUM DEPTH AT ALL POINTS
432CT FIBER CABLE

INSTALLATION LENGTH IN RW ON THIS SHEET 674 FT

AERIAL CROSSING 7

POLE
EOP 81'

POLE
EOP 77'

CROSSING LENGTH: 190'

ROW
EOP
18' MIN
EOP
ROW

28'
140'

UG CROSSING 8

POLE
EOP 13'

60'

ROW
ROW

22'
EOP
EOP

UG TICK MARK

48" MIN
48" MIN
48" MIN

CROSSING LENGTH: 51'

MATCH SHEET 23

NO MATCH SHEET

| PREPARED BY: | EXISTING POLE | RIGHT OF WAY LINE | PROPOSED COAXIAL CABLE | N W E S | ENGINEERED FOR: | WALLER COUNTY |
|---|---|---|---|---|---|---|
| | PROPOSED PEDESTAL | IRRIGATION LINE | PROPOSED FIBER CABLE | | | OLD HOUSTON HWY<br>JAMES R MUSE PKWY |
| | WATER VALVE | WATER LANE | PROPOSED DIRECTIONAL BORE | | | |
| | FIBER MARKER | GAS LANE | EXISTING CABLE | | | TRANSPORT FIBER |
| | GAS MARKER | EXISTING ANCHOR | | | | |
| | MANHOLE | R25 PROPOSED RISER | | | | |
| QUASAR, INC. | SEWER MANHOLE | | | | COMCAST | |
| | STORM DRAIN | | | | | NO SCALE / SHEET 22 OF 30 |

LEGEND:
RW - RIGHT OF WAY
EOP - EDGE OF PAVEMENT
DW - DRIVEWAY
PDW - PAVED DRIVEWAY

NOTES:
BORE HOLE TO BE FILLED SAME DAY
VAULT HOLE TO BE FILLED SAME DAY
ALL HOLE TO BE TAMPED AND SODDED

NO MATCH SHEET

MATCH SHEET 22

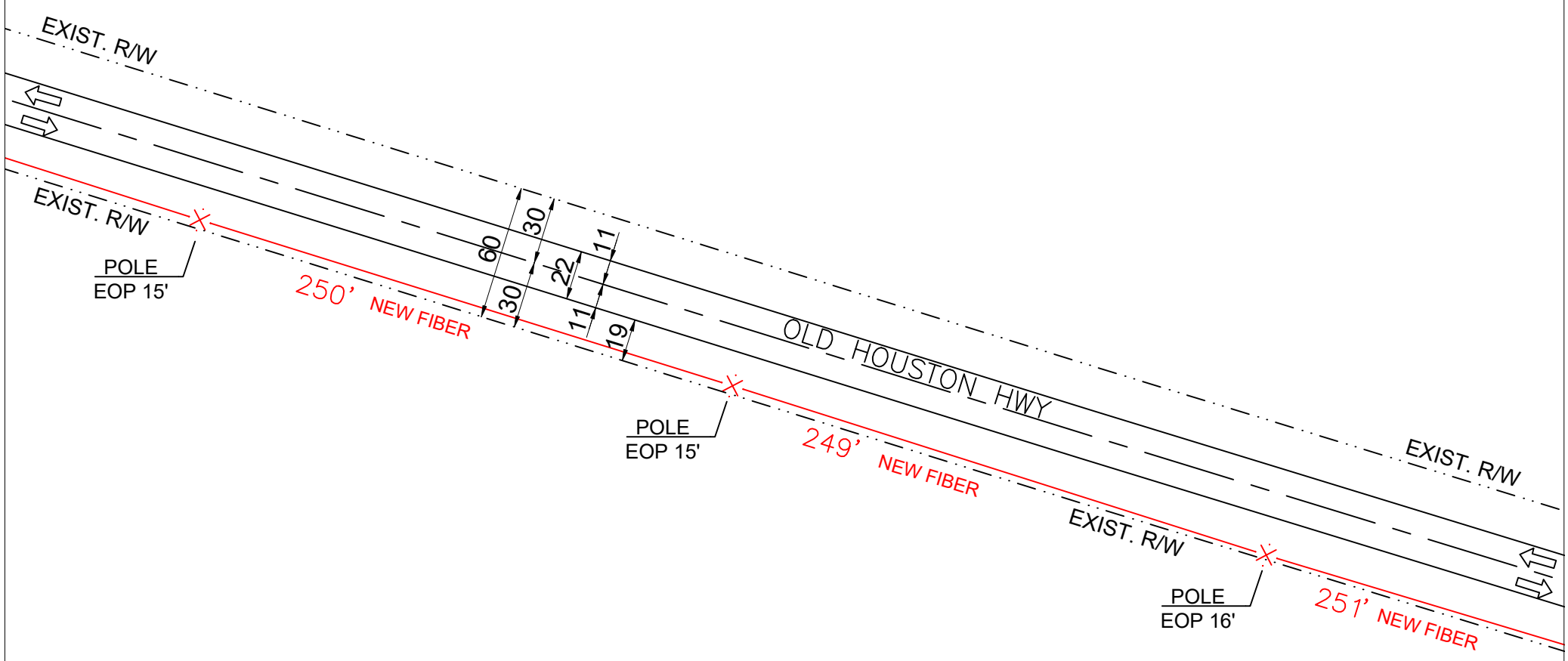


MATCH SHEET 24

PROPOSED COMCAST NEW ATTACHMENT
18' MINIMUM HEIGHT AT ALL POINTS
432CT FIBER CABLE

INSTALLATION LENGTH IN RW ON THIS SHEET 750 FT

NO MATCH SHEET

PREPARED BY:

QUASAR, INC.

EXISTING POLE
PROPOSED PEDESTAL
WATER VALVE
FIBER MARKER
GAS MARKER
MANHOLE
SEWER MANHOLE
STORM DRAIN

RIGHT OF WAY LINE
IRRIGATION LINE
WATER LANE
GAS LANE
EXISTING ANCHOR
R 25 PROPOSED RISER

PROPOSED COAXIAL CABLE
PROPOSED FIBER CABLE
PROPOSED DIRECTIONAL BORE
EXISTING CABLE

LEGEND:
RW - RIGHT OF WAY
EOP - EDGE OF PAVEMENT
DW - DRIVEWAY
PDW - PAVED DRIVEWAY

NOTES:
BORE HOLE TO BE FILLED SAME DAY
VAULT HOLE TO BE FILLED SAME DAY
ALL HOLE TO BE TAMPED AND SODDED

N
W E
S

ENGINEERED FOR:

COMCAST

WALLER COUNTY
OLD HOUSTON HWY
TRANSPORT FIBER

NO SCALE

SHEET 23 OF 30

NO MATCH SHEET

MATCH SHEET 23

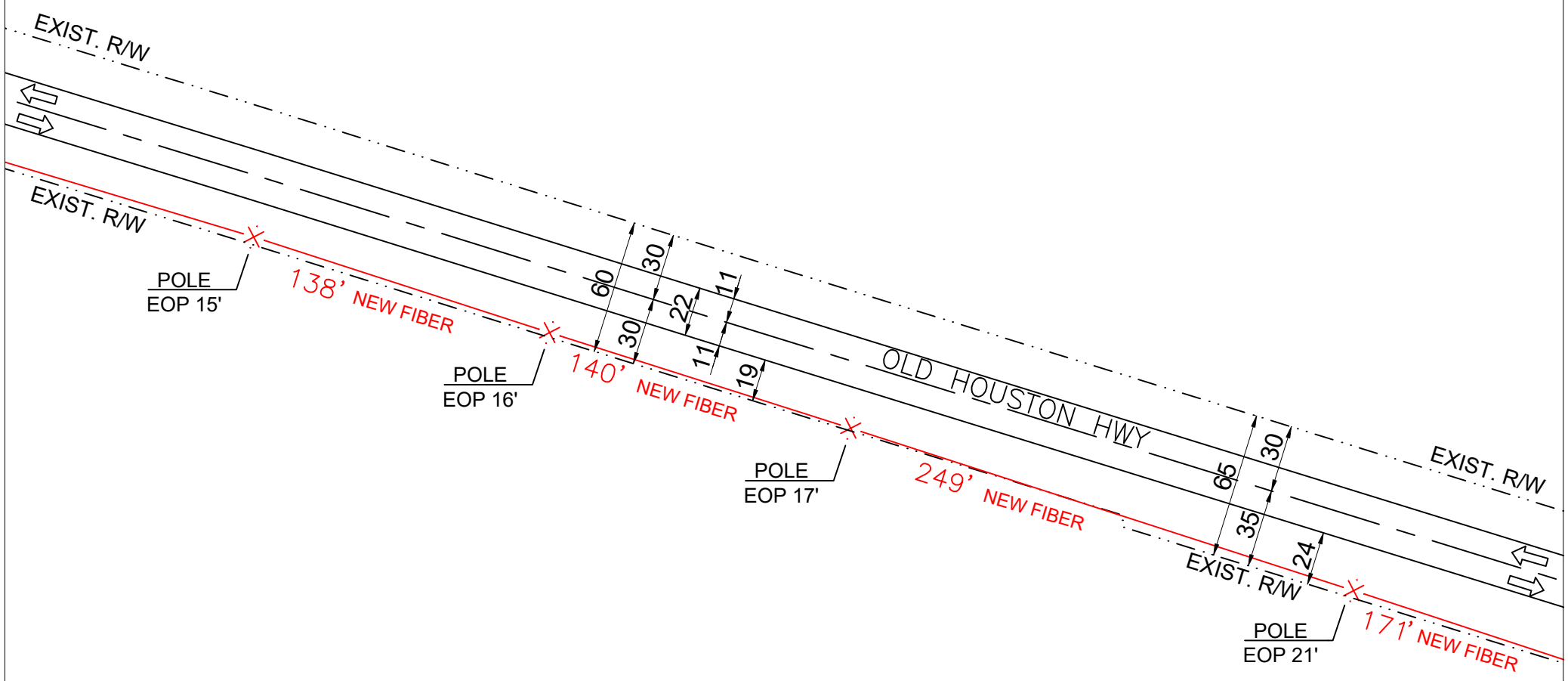


MATCH SHEET 25

PROPOSED COMCAST NEW ATTACHMENT
18' MINIMUM HEIGHT AT ALL POINTS
432CT FIBER CABLE

INSTALLATION LENGTH IN RW ON THIS SHEET 698 FT

NO MATCH SHEET

PREPARED BY:

QUASAR, INC.

EXISTING POLE
PROPOSED PEDESTAL
WATER VALVE
FIBER MARKER
GAS MARKER
MANHOLE
SEWER MANHOLE
STORM DRAIN

RIGHT OF WAY LINE
IRRIGATION LINE
WATER LANE
GAS LANE
EXISTING ANCHOR
R 25 PROPOSED RISER

PROPOSED COAXIAL CABLE
PROPOSED FIBER CABLE
PROPOSED DIRECTIONAL BORE
EXISTING CABLE

LEGEND:
RW - RIGHT OF WAY
EOP - EDGE OF PAVEMENT
DW - DRIVEWAY
PDW - PAVED DRIVEWAY

NOTES:
BORE HOLE TO BE FILLED SAME DAY
VAULT HOLE TO BE FILLED SAME DAY
ALL HOLE TO BE TAMPED AND SODDED

N
W
E
S

ENGINEERED FOR:

COMCAST

WALLER COUNTY

OLD HOUSTON HWY

TRANSPORT FIBER

NO SCALE

SHEET 24 OF 30

NO MATCH SHEET

MATCH SHEET 24

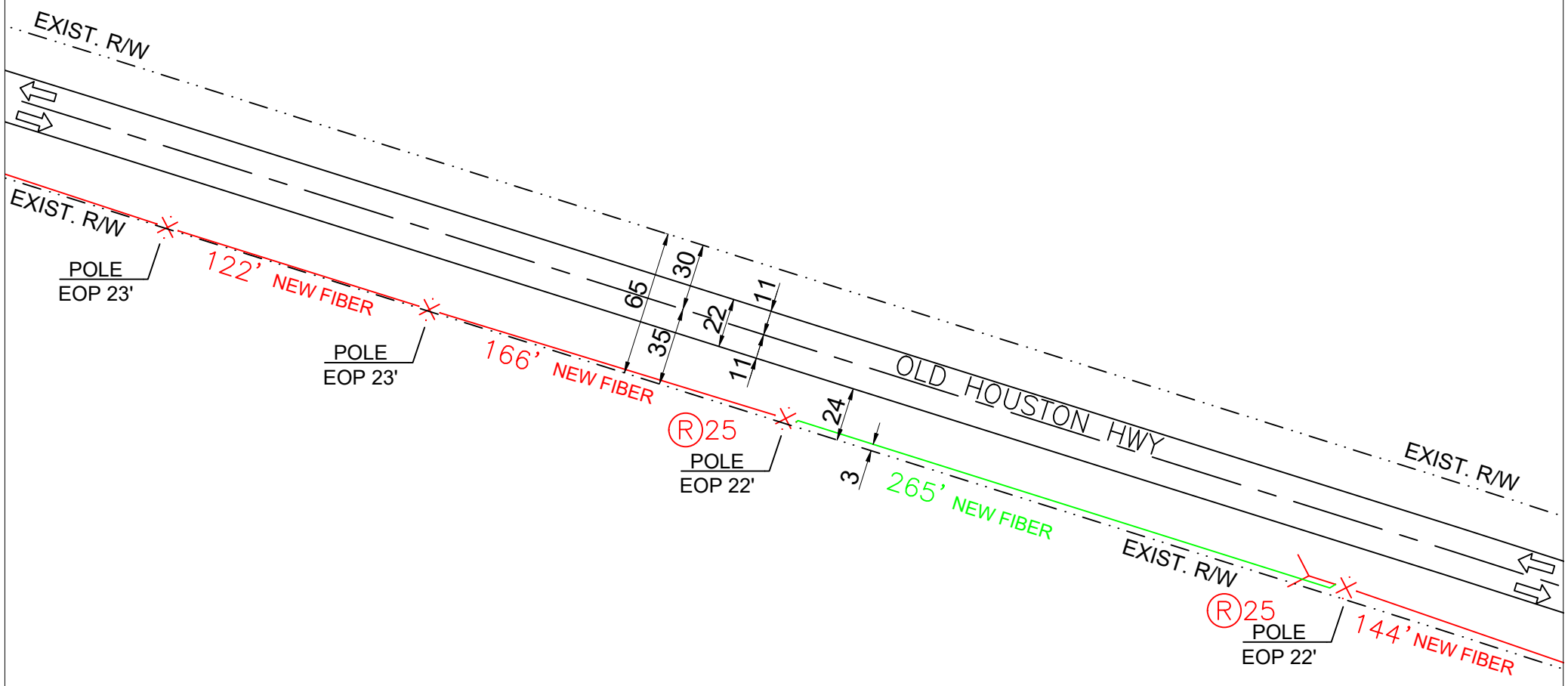


MATCH SHEET 26

PROPOSED COMCAST UNDERGROUND
DIRECTIONAL BORE
4' MINIMUM DEPTH AT ALL POINTS
432CT FIBER CABLE

PROPOSED COMCAST NEW ATTACHMENT
18' MINIMUM HEIGHT AT ALL POINTS
432CT FIBER CABLE

INSTALLATION LENGTH IN RW ON THIS SHEET 697 FT

NO MATCH SHEET

PREPARED BY:

QUASAR, INC.

EXISTING POLE
PROPOSED PEDESTAL
WATER VALVE
FIBER MARKER
GAS MARKER
MANHOLE
SEWER MANHOLE
STORM DRAIN

RIGHT OF WAY LINE
IRRIGATION LINE
WATER LANE
GAS LANE
EXISTING ANCHOR
R25 PROPOSED RISER

PROPOSED COAXIAL CABLE
PROPOSED FIBER CABLE
PROPOSED DIRECTIONAL BORE
EXISTING CABLE

LEGEND:
RW - RIGHT OF WAY
EOP - EDGE OF PAVEMENT
DW - DRIVEWAY
PDW - PAVED DRIVEWAY

NOTES:
BORE HOLE TO BE FILLED SAME DAY
VAULT HOLE TO BE FILLED SAME DAY
ALL HOLE TO BE TAMPED AND SODDED

N
W
E
S

ENGINEERED FOR:

COMCAST

WALLER COUNTY

OLD HOUSTON HWY

TRANSPORT FIBER

NO SCALE

SHEET 25 OF 30

NO MATCH SHEET

MATCH SHEET 25

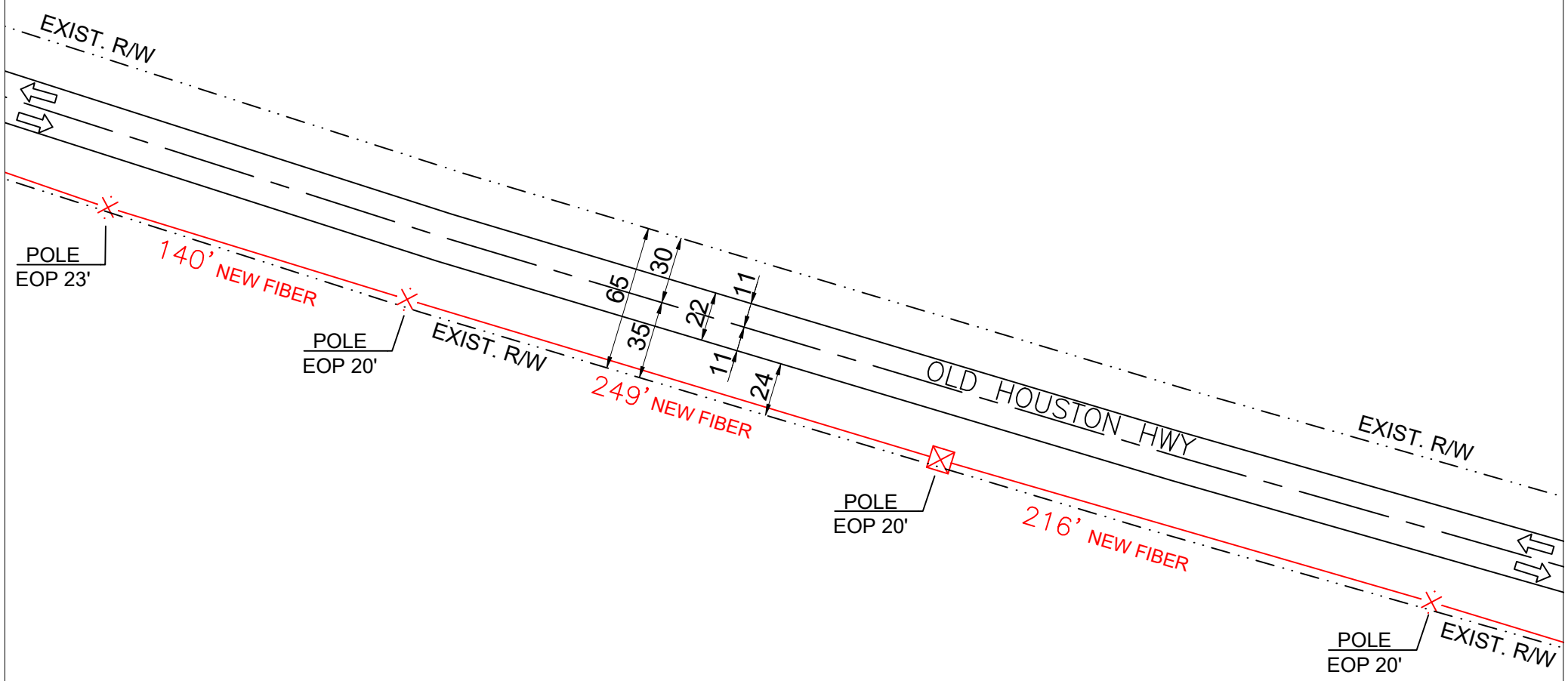


MATCH SHEET 27

PROPOSED COMCAST NEW ATTACHMENT
18' MINIMUM HEIGHT AT ALL POINTS
432CT FIBER CABLE

INSTALLATION LENGTH IN RW ON THIS SHEET 605 FT

NO MATCH SHEET

PREPARED BY:

QUASAR, INC.

EXISTING POLE
PROPOSED PEDESTAL
WATER VALVE
FIBER MARKER
GAS MARKER
MANHOLE
SEWER MANHOLE
STORM DRAIN

RIGHT OF WAY LINE
IRRIGATION LINE
WATER LANE
GAS LANE
EXISTING ANCHOR
PROPOSED RISER

PROPOSED COAXIAL CABLE
PROPOSED FIBER CABLE
PROPOSED DIRECTIONAL BORE
EXISTING CABLE

LEGEND:
RW - RIGHT OF WAY
EOP - EDGE OF PAVEMENT
DW - DRIVEWAY
PDW - PAVED DRIVEWAY

NOTES:
BORE HOLE TO BE FILLED SAME DAY
VAULT HOLE TO BE FILLED SAME DAY
ALL HOLE TO BE TAMPED AND SODDED

N
W
E
S

ENGINEERED FOR:

COMCAST

WALLER COUNTY

OLD HOUSTON HWY

TRANSPORT FIBER

NO SCALE

SHEET 26 OF 30

NO MATCH SHEET

MATCH SHEET 26

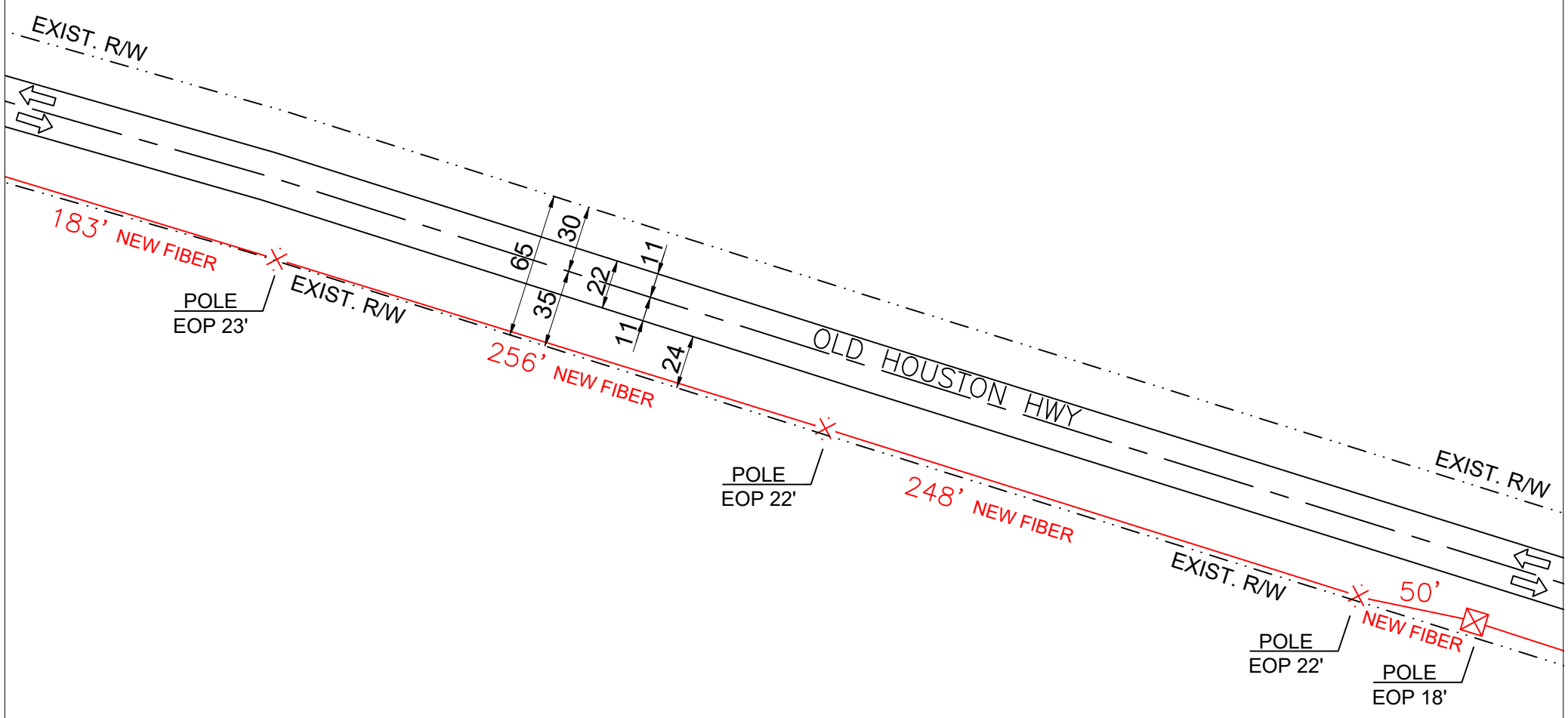


MATCH SHEET 28

PROPOSED COMCAST NEW ATTACHMENT
18' MINIMUM HEIGHT AT ALL POINTS
432CT FIBER CABLE

INSTALLATION LENGTH IN RW ON THIS SHEET 737 FT

NO MATCH SHEET

PREPARED BY:

QUASAR, INC.

EXISTING POLE
PROPOSED PEDESTAL
WATER VALVE
FIBER MARKER
GAS MARKER
MANHOLE
SEWER MANHOLE
STORM DRAIN

RIGHT OF WAY LINE
IRRIGATION LINE
WATER LANE
GAS LANE
EXISTING ANCHOR
R 25 PROPOSED RISER

PROPOSED COAXIAL CABLE
PROPOSED FIBER CABLE
PROPOSED DIRECTIONAL BORE
EXISTING CABLE

LEGEND:
RW - RIGHT OF WAY
EOP - EDGE OF PAVEMENT
DW - DRIVEWAY
PDW - PAVED DRIVEWAY

NOTES:
BORE HOLE TO BE FILLED SAME DAY
VAULT HOLE TO BE FILLED SAME DAY
ALL HOLE TO BE TAMPED AND SODDED

N
W E
S

ENGINEERED FOR:

COMCAST

WALLER COUNTY

OLD HOUSTON HWY

TRANSPORT FIBER

NO SCALE

SHEET 27 OF 30

NO MATCH SHEET

MATCH SHEET 27

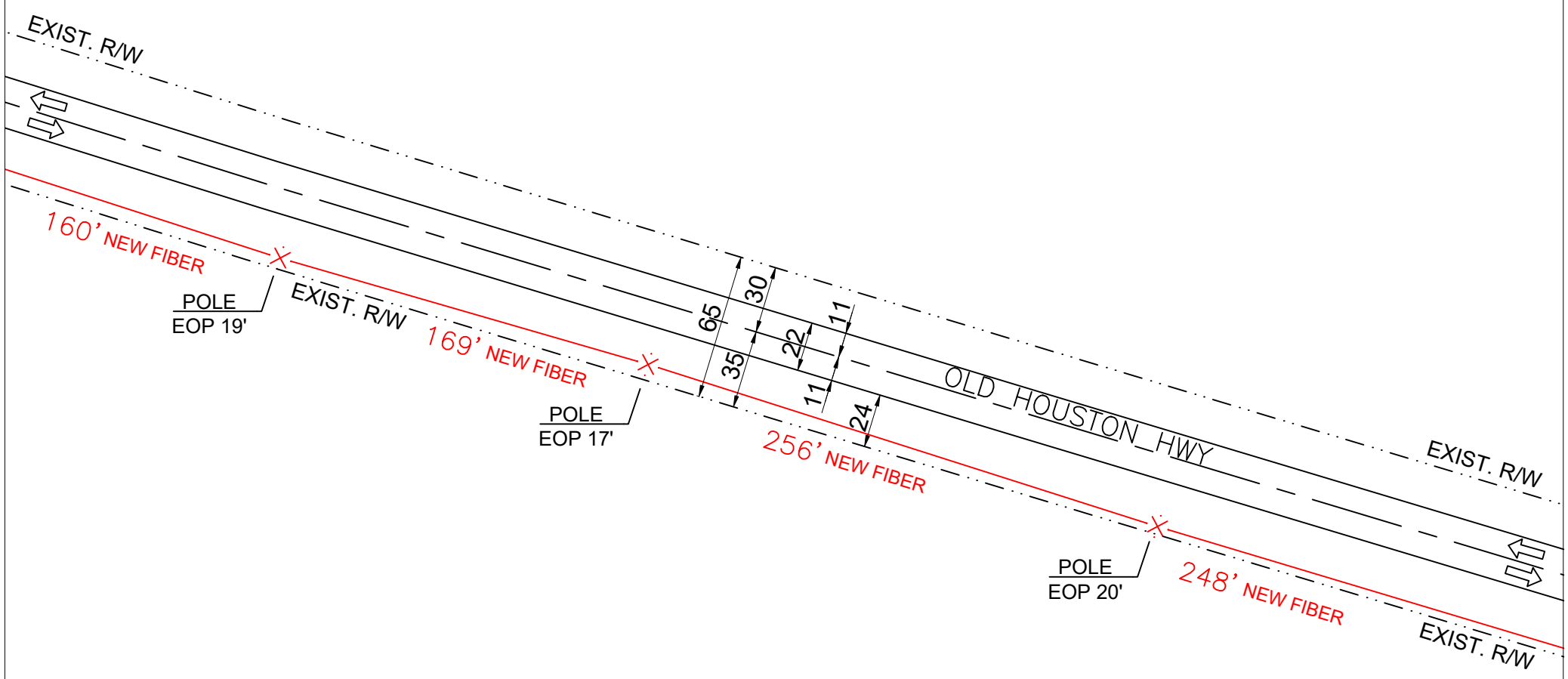


MATCH SHEET 29

PROPOSED COMCAST NEW ATTACHMENT
18' MINIMUM HEIGHT AT ALL POINTS
432CT FIBER CABLE

INSTALLATION LENGTH IN RW ON THIS SHEET 833 FT

NO MATCH SHEET

PREPARED BY:

QUASAR, INC.

EXISTING POLE
PROPOSED PEDESTAL
WATER VALVE
FIBER MARKER
GAS MARKER
MANHOLE
SEWER MANHOLE
STORM DRAIN

RIGHT OF WAY LINE
IRRIGATION LINE
WATER LANE
GAS LANE
EXISTING ANCHOR
R 25 PROPOSED RISER

PROPOSED COAXIAL CABLE
PROPOSED FIBER CABLE
PROPOSED DIRECTIONAL BORE
EXISTING CABLE

LEGEND:
RW - RIGHT OF WAY
EOP - EDGE OF PAVEMENT
DW - DRIVEWAY
PDW - PAVED DRIVEWAY

NOTES:
BORE HOLE TO BE FILLED SAME DAY
VAULT HOLE TO BE FILLED SAME DAY
ALL HOLE TO BE TAMPED AND SODDED

N
W E
S

ENGINEERED FOR:

COMCAST

WALLER COUNTY

OLD HOUSTON HWY

TRANSPORT FIBER

NO SCALE

SHEET 28 OF 30

NO MATCH SHEET

MATCH SHEET 28

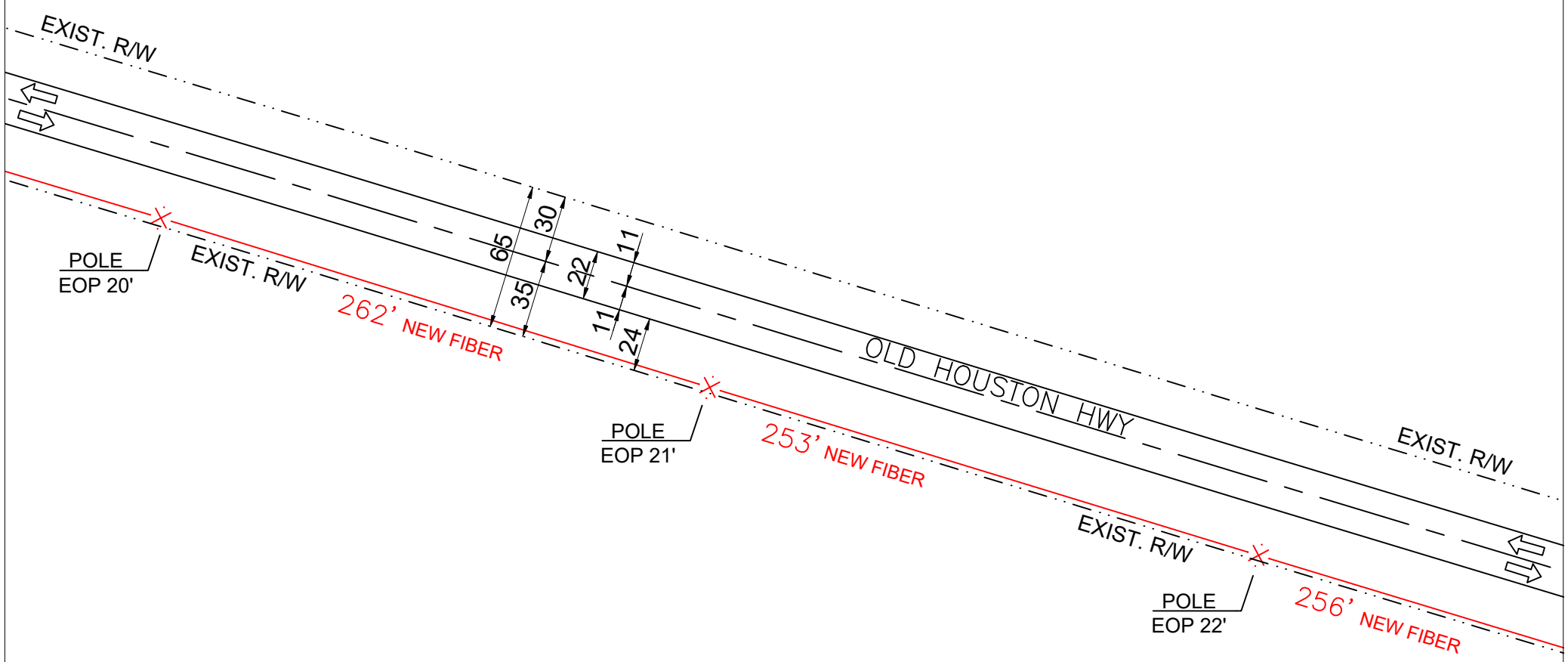


MATCH SHEET 30

PROPOSED COMCAST NEW ATTACHMENT
18' MINIMUM HEIGHT AT ALL POINTS
432CT FIBER CABLE

INSTALLATION LENGTH IN RW ON THIS SHEET 771 FT

NO MATCH SHEET

PREPARED BY:

QUASAR, INC.

EXISTING POLE
PROPOSED PEDESTAL
WATER VALVE
FIBER MARKER
GAS MARKER
MANHOLE
SEWER MANHOLE
STORM DRAIN

RIGHT OF WAY LINE
IRRIGATION LINE
WATER LANE
GAS LANE
EXISTING ANCHOR
R 25 PROPOSED RISER

PROPOSED COAXIAL CABLE
PROPOSED FIBER CABLE
PROPOSED DIRECTIONAL BORE
EXISTING CABLE

LEGEND:
RW - RIGHT OF WAY
EOP - EDGE OF PAVEMENT
DW - DRIVEWAY
PDW - PAVED DRIVEWAY

NOTES:
BORE HOLE TO BE FILLED SAME DAY
VAULT HOLE TO BE FILLED SAME DAY
ALL HOLE TO BE TAMPED AND SODDED

N
W E
S

ENGINEERED FOR:

COMCAST

WALLER COUNTY

OLD HOUSTON HWY

TRANSPORT FIBER

NO SCALE

SHEET 29 OF 30

NO MATCH SHEET

MATCH SHEET 29

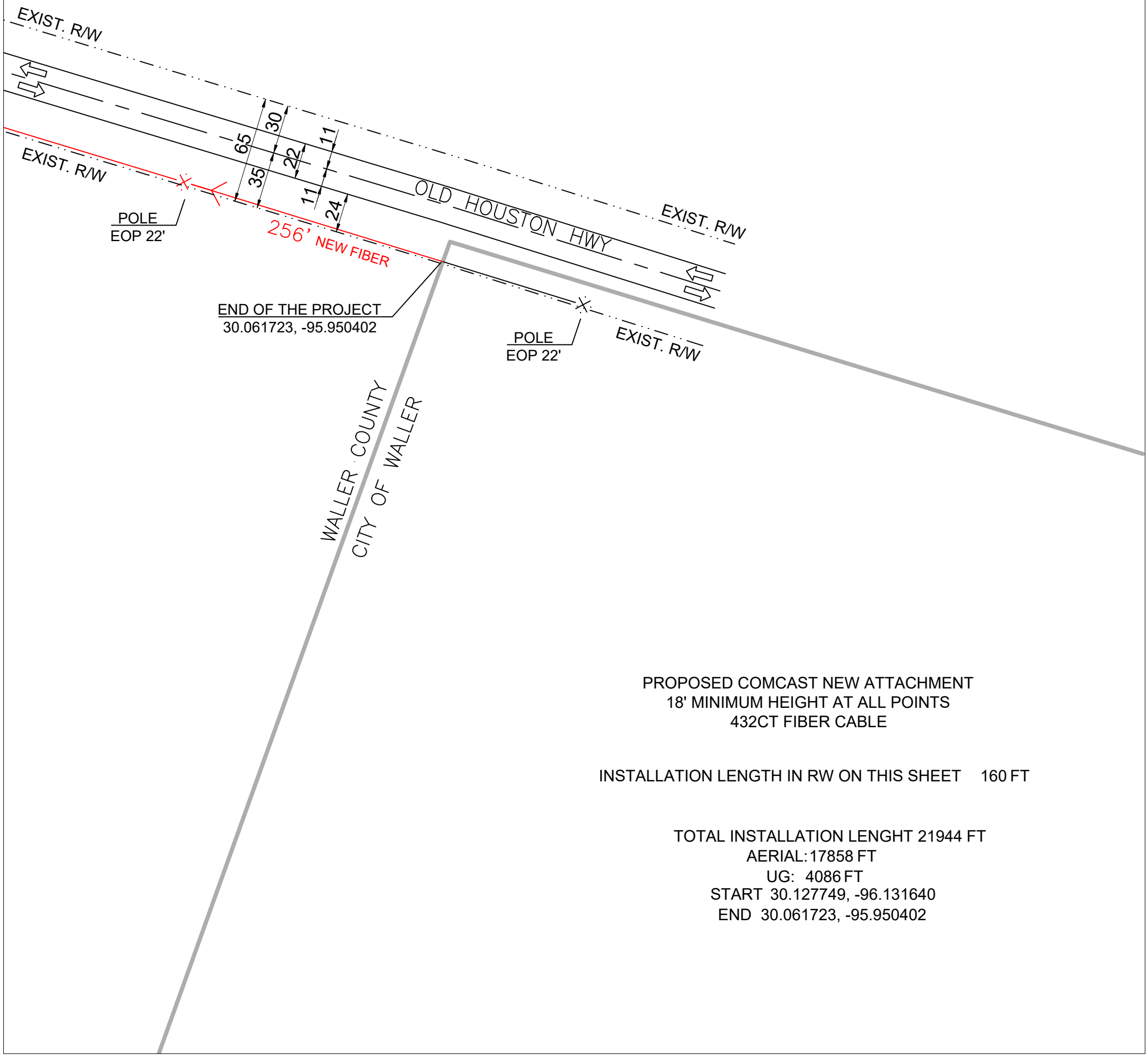


PROPOSED COMCAST NEW ATTACHMENT
18' MINIMUM HEIGHT AT ALL POINTS
432CT FIBER CABLE

INSTALLATION LENGTH IN RW ON THIS SHEET 160 FT

TOTAL INSTALLATION LENGHT 21944 FT
AERIAL: 17858 FT
UG: 4086 FT
START 30.127749, -96.131640
END 30.061723, -95.950402

NO MATCH SHEET

NO MATCH SHEET

PREPARED BY:

QUASAR, INC.

EXISTING POLE
PROPOSED PEDESTAL
WATER VALVE
FIBER MARKER
GAS MARKER
MANHOLE
SEWER MANHOLE
STORM DRAIN

RIGHT OF WAY LINE
IRRIGATION LINE
WATER LANE
GAS LANE
EXISTING ANCHOR
R 25 PROPOSED RISER

PROPOSED COAXIAL CABLE
PROPOSED FIBER CABLE
PROPOSED DIRECTIONAL BORE
EXISTING CABLE

LEGEND:
RW - RIGHT OF WAY
EOP - EDGE OF PAVEMENT
DW - DRIVEWAY
PDW - PAVED DRIVEWAY

NOTES:
BORE HOLE TO BE FILLED SAME DAY
VAULT HOLE TO BE FILLED SAME DAY
ALL HOLE TO BE TAMPED AND SODDED

N W E S

ENGINEERED FOR:

COMCAST

WALLER COUNTY
OLD HOUSTON HWY
TRANSPORT FIBER

NO SCALE

SHEET 30 OF 30

DISCLAIMER:
The use of this standard is governed by the "Texas Engineering Practice Act". No warranty of any kind is made by TxDOT for any purpose whatsoever. TxDOT assumes no responsibility for the conversion of this standard to other formats or for incorrect results or damages resulting from its use.

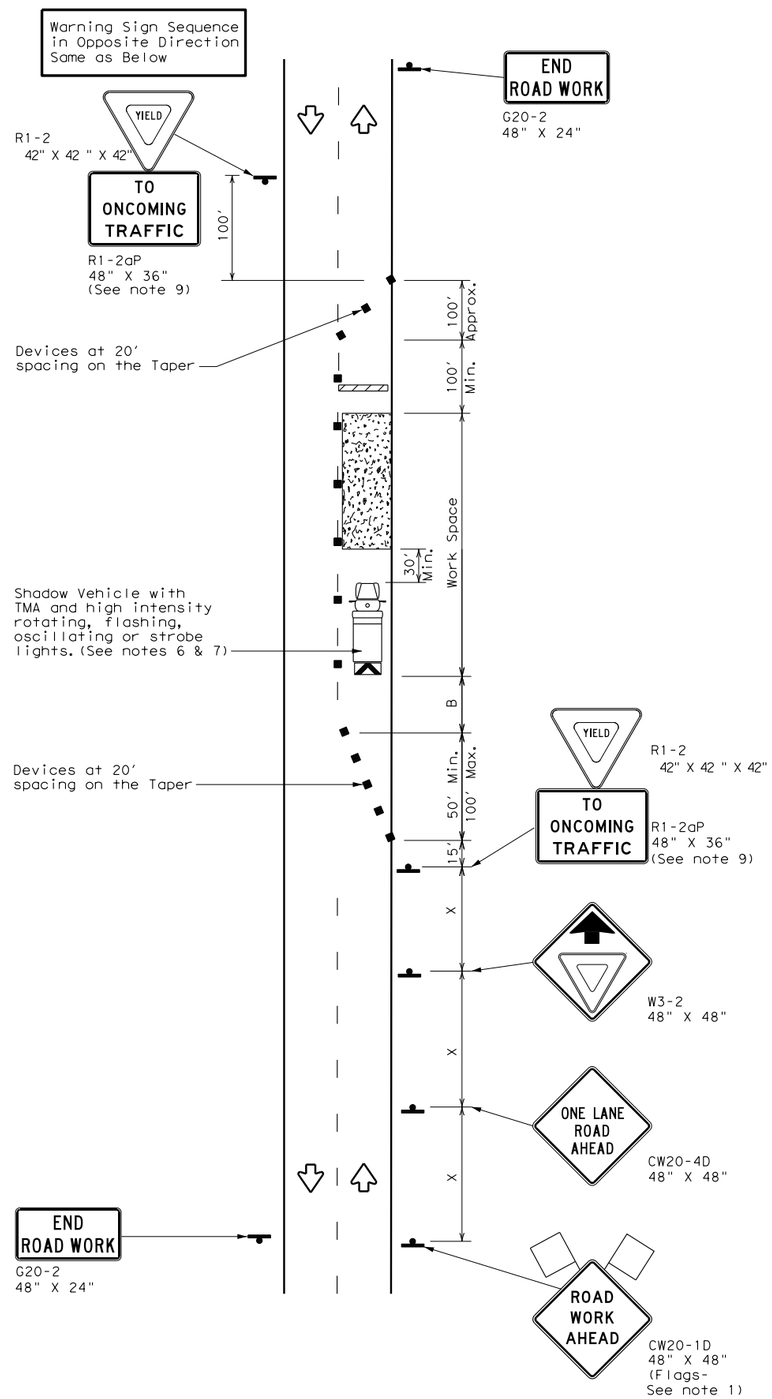


TCP (2-2a)
2-LANE ROADWAY WITHOUT PAVED SHOULDERS
ONE LANE TWO-WAY
CONTROL WITH YIELD SIGNS
(Less than 2000 ADT - See Note 9)

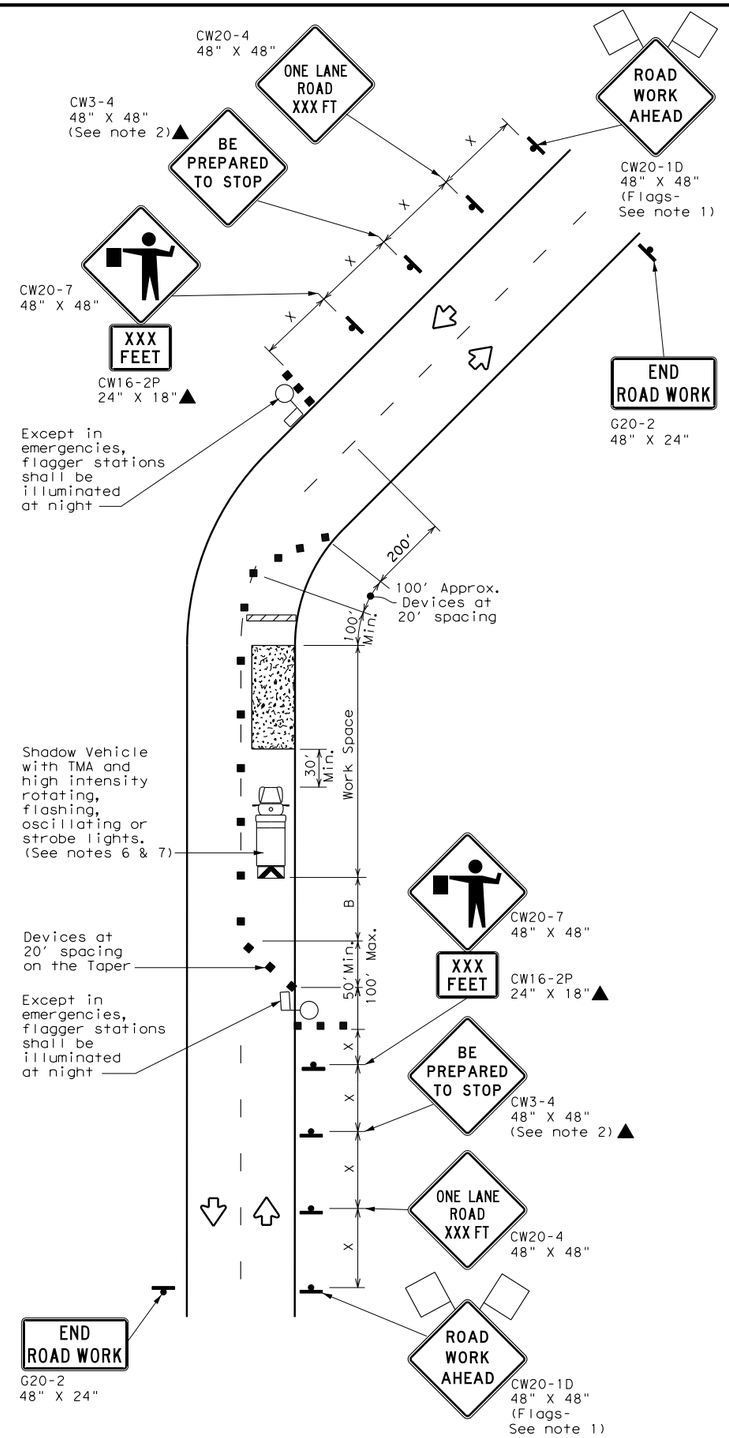


TCP (2-2b)
2-LANE ROADWAY WITHOUT PAVED SHOULDERS
ONE LANE TWO-WAY
CONTROL WITH FLAGGERS

## LEGEND

| | | | |
|---|---|---|---|
| | Type 3 Barricade | | Channelizing Devices |
| | Heavy Work Vehicle | | Truck Mounted Attenuator (TMA) |
| | Trailer Mounted Flashing Arrow Board | M | Portable Changeable Message Sign (PCMS) |
| | Sign | | Traffic Flow |
| | Flag | | Flagger |

| Posted Speed ✱ | Formula | Minimum Desirable Taper Lengths ✱✱ 10' Offset | 11' Offset | 12' Offset | Suggested Maximum Spacing of Channelizing Devices On a Taper | On a Tangent | Minimum Sign Spacing "X" Distance | Suggested Longitudinal Buffer Space "B" | Stopping Sight Distance |
|---|---|---|---|---|---|---|---|---|---|
| 30 | $L = \frac{WS^2}{60}$ | 150' | 165' | 180' | 30' | 60' | 120' | 90' | 200' |
| 35 | | 205' | 225' | 245' | 35' | 70' | 160' | 120' | 250' |
| 40 | | 265' | 295' | 320' | 40' | 80' | 240' | 155' | 305' |
| 45 | L = WS | 450' | 495' | 540' | 45' | 90' | 320' | 195' | 360' |
| 50 | | 500' | 550' | 600' | 50' | 100' | 400' | 240' | 425' |
| 55 | | 550' | 605' | 660' | 55' | 110' | 500' | 295' | 495' |
| 60 | | 600' | 660' | 720' | 60' | 120' | 600' | 350' | 570' |
| 65 | | 650' | 715' | 780' | 65' | 130' | 700' | 410' | 645' |
| 70 | | 700' | 770' | 840' | 70' | 140' | 800' | 475' | 730' |
| 75 | | 750' | 825' | 900' | 75' | 150' | 900' | 540' | 820' |

✱ Conventional Roads Only
✱✱ Taper lengths have been rounded off.
L=Length of Taper(FT) W=Width of Offset(FT) S=Posted Speed(MPH)

## TYPICAL USAGE

| MOBILE | SHORT DURATION | SHORT TERM STATIONARY | INTERMEDIATE TERM STATIONARY | LONG TERM STATIONARY |
|---|---|---|---|---|
| | ✓ | ✓ | ✓ | |

## GENERAL NOTES

1. Flags attached to signs where shown, are REQUIRED.
2. All traffic control devices illustrated are REQUIRED, except those denoted with the triangle symbol may be omitted when stated elsewhere in the plans, or for routine maintenance work, when approved by the Engineer.
3. The CW3-4 "BE PREPARED TO STOP" sign may be installed after the CW20-4 "ONE LANE ROAD XXX FT" sign, but proper sign spacing shall be maintained.
4. Flaggers should use two-way radios or other methods of communication to control traffic.
5. Length of work space should be based on the ability of flaggers to communicate.
6. A Shadow Vehicle with a TMA should be used anytime it can be positioned 30 to 100 feet in advance of the area of crew exposure without adversely affecting the performance or quality of the work. If workers are no longer present but road or work conditions require the traffic control to remain in place, Type 3 Barricades or other channelizing devices may be substituted for the Shadow Vehicle and TMA.
7. Additional Shadow Vehicles with TMAs may be positioned off the paved surface, next to those shown in order to protect a wider work space.

### TCP (2-2a)

8. The R1-2 "YIELD" sign traffic control may be used on projects with approaches that have adequate sight distance. For projects in urban areas, work space should be no longer than one half city block. In rural areas, roadways with less than 2000 ADT, work space should be no longer than 400 feet.
9. The R1-2aP "YIELD TO ONCOMING TRAFFIC" sign shall be placed on a support at a 7 foot minimum mounting height.

### TCP (2-2b)

10. Channelizing devices on the center line may be omitted when a pilot car is leading traffic and approved by the Engineer.
11. If the work space is located near a horizontal or vertical curve, the buffer distances should be increased in order to maintain stopping sight distance to the flagger and a queue of stopped vehicles. (See table above).
12. Flaggers should use 24" STOP/SLOW paddles to control traffic. Flags should be limited to emergency situtations.

Notes:
The contractor must notify the precinct at least 48 hours before a lane closure.

No lanes shall be closed during the hours of 7:00 AM to 9:00 AM and 4:00 PM to 6:00 PM Monday through Friday.

Texas Department of Transportation
Traffic Operations Division Standard

# TRAFFIC CONTROL PLAN ONE-LANE TWO-WAY TRAFFIC CONTROL

# TCP(2-2)-18

| FILE: tcp2-2-18.dgn | DN: | CK: | DW: | CK: |
|---|---|---|---|---|
| ©TxDOT December 1985 | CONT | SECT | JOB | HIGHWAY |
| REVISIONS 8-95 3-03 1-97 2-12 4-98 2-18 | DIST | COUNTY | | SHEET NO. |

DATE:
FILE: