RESOLUTION 2023-62

A RESOLUTION OF THE TOWN COUNCIL OF THE TOWN OF TRUCKEE UPHOLDING THE PLANNING COMMISSION'S DECISION, DENYING THE APPEAL OF THE TAHOE DONNER DOWNHILL SKI LODGE REPLACEMENT, APPROVING THE TAHOE DONNER DOWNHILL SKI LODGE, AND ADOPTING A MITIGATED NEGATIVE DECLARATION AND ASSOCIATED MITIGATION MONITORING AND REPORTING PROGRAM

EXHIBIT "A"

APPROVED PLANS

TAHOE DONNER

DOWNHILL SKI LODGE • DEVELOPMENT PERMIT RESUBMITTAL

DEC 01, 2022

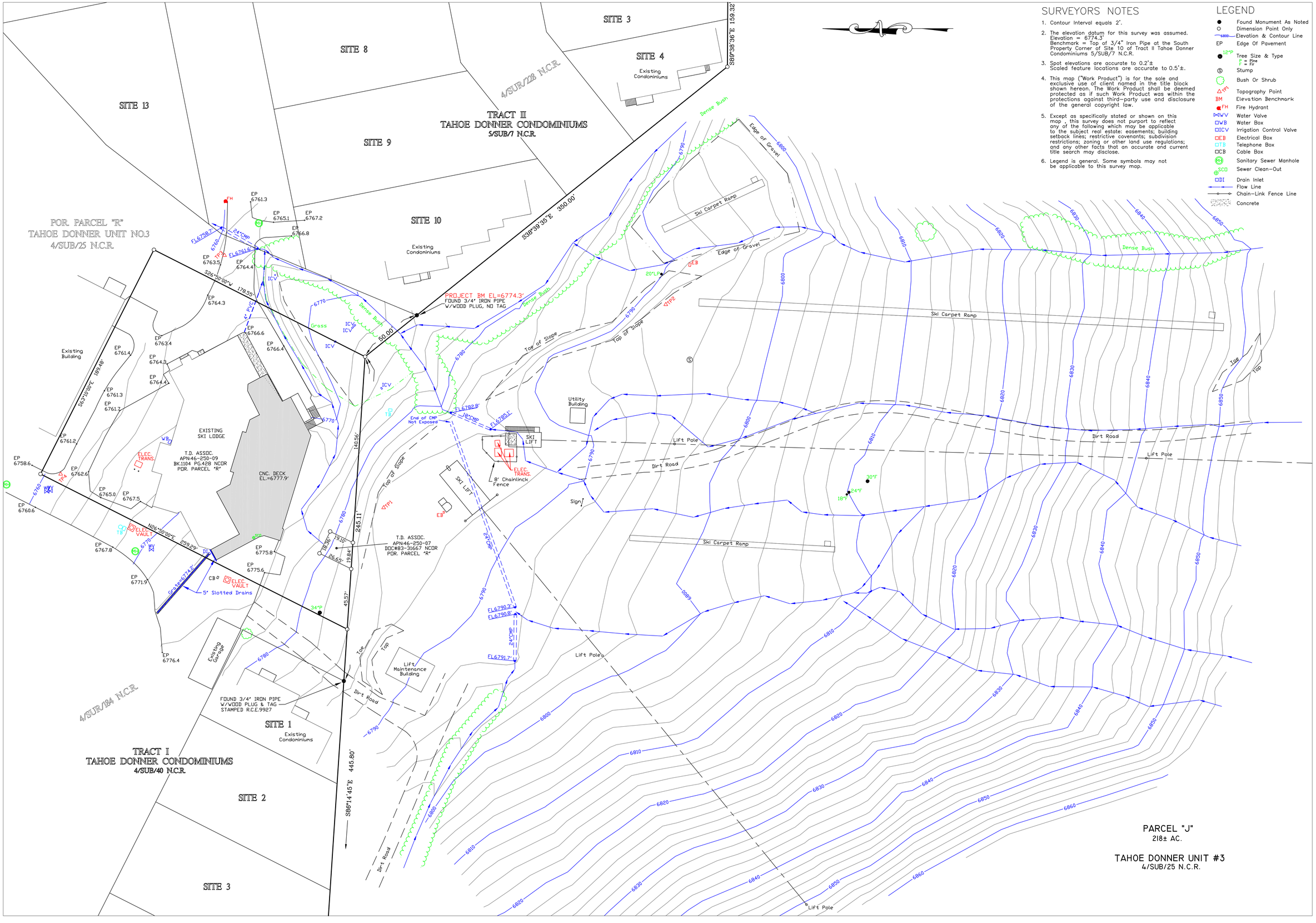

SURVEYORS NOTES

1. Contour Interval equals 2'.
2. The elevation datum for this survey was assumed. Elevation = 6774.3' Benchmark = Top of 3/4" Iron Pipe at the South Property Corner of Site 10 of Tract II Tahoe Donner Condominiums 5/SUB/7 N.C.R.
3. Spot elevations are accurate to 0.2'± Scaled feature locations are accurate to 0.5'±.
4. This map ("Work Product") is for the sole and exclusive use of client named in the title block shown hereon. The Work Product shall be deemed protected as if such Work Product was within the protections against third-party use and disclosure of the general copyright law.
5. Except as specifically stated or shown on this map , this survey does not purport to reflect any of the following which may be applicable to the subject real estate: easements; building setback lines; restrictive covenants; subdivision restrictions; zoning or other land use regulations; and any other facts that an accurate and current title search may disclose.
6. Legend is general. Some symbols may not be applicable to this survey map.

LEGEND

- Found Monument As Noted
- Dimension Point Only
- 6800 Elevation & Contour Line
- EP Edge Of Pavement
- 12"P Tree Size & Type (P = Pine, F = Fir)
- Stump
- Bush Or Shrub
- TP1 Topography Point
- BM Elevation Benchmark
- FH Fire Hydrant
- WV Water Valve
- WB Water Box
- ICV Irrigation Control Valve
- EB Electrical Box
- TB Telephone Box
- CB Cable Box
- Sanitary Sewer Manhole
- CO Sewer Clean-Out
- DI Drain Inlet
- Flow Line
- Chain-Link Fence Line
- Concrete

REVISION	BY

Sage Land Surveying Inc.
10049 Martis Valley Rd. Unit A
Truckee, CA 96161
(530) 550-8006

TOPOGRAPHIC SURVEY FOR TAHOE DONNER SKI AREA - YURT DESIGN
PORTION PARCEL "J" TAHOE DONNER UNIT #3 (BK. 4 /SUBD/ PG. 25 N. C. R.)
FOR THE TAHOE DONNER ASSOCIATION (APN's: 46-250-05)
TOWN OF TRUCKEE NEVADA COUNTY CALIFORNIA

DATE	10 AUG 2012
SCALE	1 inch = 30 feet
DRAWN	JKM
JOB	12046
SHEET	1 OF 1 SHEETS

1 TABLE OF CONTENTS
2 INTRODUCTION/PROJECT DESCRIPTION
3 PROJECT INFORMATION
4 OVERALL SITE : AERIAL VIEW
5 PRELIMINARY LOT LINE ADJUSTMENT EXHIBIT
6 EXISTING SURROUNDING PHOTOS
7 ARCHITECTURAL SITE/ROOF PLAN (UPDATED)
8 FLOOR PLAN - LEVEL 1
9 FLOOR PLAN - LEVEL 2 (UPDATED)
10 FLOOR PLAN - LEVEL 3 (UPDATED)
11 WEST ELEVATION/MAXIMUM HEIGHT DIAGRAM (UPDATED)
12 EXTERIOR VIEW/ELEVATION - STREET (WEST) SIDE (UPDATED)
13 EXTERIOR VIEW/ELEVATION - SKI LIFT (SOUTH) SIDE (UPDATED)
14 EXTERIOR VIEW/ELEVATION - NORTH-EAST SIDE (UPDATED)
15 EXTERIOR VIEW/ELEVATION - SOUTH-EAST SIDE (UPDATED)
16 SOUTH AND EAST ELEVATION (UPDATED)
17 NORTH ELEVATION (UPDATED)
18 ARCHITECTURAL MATERIAL BOARD (UPDATED)
19 PRELIMINARY LANDSCAPE PLAN (UPDATED)
20 PLANTING AND MATERIALS (UPDATED)
21 EXISTING PARKING LOTS AND CIRCULATION EXHIBIT
22 EXISTING OFFSITE PARKING
23 EXISTING PARKING AREA LOT 1 & 2
24 EXISTING PARKING AREA LOT 3 & 4
25 EXISTING PARKING AREA LOT 5
26 SNOW STORAGE EXHIBIT
27 C1 EXISTING SITE PLAN (UPDATED)
28 C2 DEMOLITION AND EROSION CONTROL (UPDATED)
29 C3 BUILDING PAD MASS GRADING PLAN (UPDATED)
30 C4 CIVIL SITE PLAN (UPDATED)
31 C5 GRADING AND DRAINAGE PLAN (UPDATED)
32 C6 UTILITY PLAN (UPDATED)
33 LIGHTING TYPES (UPDATED)
34 SITE PHOTOMETRIC STUDY (UPDATED)
35 SIGNAGE TYPES (UPDATED)
36 TRASH ENCLOSURE PLAN & ELEVATIONS (UPDATED)
37 SOLAR ACCESS SHADOW PLAN
38 TD LODGE COMMUNITY OUTREACH

The proposed project is the replacement of the Downhill Ski Lodge (Lodge) at the Tahoe Donner Downhill Ski Area located at 11603 Snowpeak Way, Truckee CA.

The Existing Tahoe Donner Downhill Ski Lodge was approved as part of the original Tahoe Donner comprehensive zoning and built by the Dart Corporation in 1971. The site/lodge have undergone upgrades and remodeling over the years. In 1987, a 3-phase addition/remodel was approved (Nevada County Use Permit no. U86-56). The current use and operations for all seasons is to remain the same.

On December 14, 2019, the Tahoe Donner Association Board of Directions approved moving forward with a full building replacement. The new Downhill Ski Lodge will be constructed at the location of the existing Downhill Ski Lodge, which will be demolished. After a 2-year comprehensive community feedback and engagement initiative, the Board received extensive feedback and ultimately considered a number of options during the April 4, 2022 open board meeting. The Board narrowed it to three options and held a final open meeting on Saturday, April 23, 2022 where they selected the size. A detailed overview of the communication and outreach plan is also provided with this submittal. Tahoe Donner Association has been actively studying the needs for the new Downhill Ski Lodge for several years through involvement by the membership, staff, the Downhill Ski Sub-Committee, the Downhill Ski Lodge Task Force, the General Plan Committee and design/planning consultants.

The project site is +/-1-acre parcel located in the Tahoe Donner Subdivision. Tahoe Donner Association (TDA) is currently also submitting a Minor Boundary Line Adjustment (MBLA) application to adjust the lot line between Recreational parcels APN:046-250-009, APN: 046-250-007 and APN: 046-250-005.

The proposed project is a 24,490 sq-ft ski area day lodge to accommodate all aspects of Tahoe Donners Downhill Ski Area Operation. The table to the right depicts the existing site and surrounding zoning, land use, and improvements.

Location	Zoning	General Plan	Existing Conditions and Improvements
Site APN: 046-250-009	Recreation (REC)	Tahoe Donner General Plan	Tahoe Donner Association Downhill Ski Lodge
North APN: 046-250-013	Residential Multi-Family (RM-15)	Tahoe Donner General Plan	Tahoe Donner Association Clubhouse/Swimming Pool
South APN: 046-250-007 (0.01 ac. TDA parcel) APN: 046-250-005	Recreation (REC)	Tahoe Donner General Plan	Tahoe Donner Association & Tahoe Donner Ski Resort
East APNs: 046-250-013 & 046-250-014	Residential Multi-Family (RM-15)	Tahoe Donner General Plan	Tahoe Donner Association & Condominiums
West APNs: 046-250-013, 046-250-012 & 046-570-023	Residential Multi-Family (RM-15)	Tahoe Donner General Plan	Tahoe Donner Association & Condominiums

Level 1

Staff support and Prep kitchen	1,600 sqft
Storage, Utility, Restrooms	1,650 sqft
Circulation and Walls	1,015 sqft

Level 2

Rentals and Guest services	5,135 sqft
Ski school training and Offices	1,969 sqft
Storage and Restrooms	1,400 sqft
Circulation and Walls	1,621 sqft

Level 3

Dining and Kitchen	7,880 sqft
Storage and Restrooms	1,075 sqft
Circulation and Walls	1,145 sqft

BUILDING SIZE

Level 1: 4,265 sqft
Level 2: 10,125 sqft
Level 3: 10,100 sqft

Total Gross sqft of the building: 24,490 sqft

Site Planning

After the lot line adjustment, the ski lodge parcel is expanded to less than 3 acres. The parcel size is around 115,000 SF. This allows 20 feet setbacks on three sides. The project proposed is under the 40% maximum site coverage. The location of the lodge is shown on the Architectural and Civil Site Plans.

The new lodge is sited to allow for proper shuttle drop-off area as well as emergency vehicle access from Slalom Way. The siting of the new building also allows us to keep the existing north access road for accessing the loading area and ski patrol, as well as the existing condominiums. The proposed lodge has three levels, terracing the site to minimize cut and fill and provides a deck that is on the same level as the existing ski lift, rather than one floor below on the existing deck.

Height

The proposed building is under the 35 feet height limit. The information can be found on the Maximum Height Diagram. The measurement of Height limit established by Article II allows measurement as the vertical distance from the highest point of the building to the average of the highest and lowest points where the exterior walls touch the natural grade.

Parking & Circulation

A parking study has been analyzed by LSC Transportation consultant. The findings are provided in the LSC report and the Parking & Circulation and the Existing Parking Lots Plans exhibits.

Exterior Lighting

The exterior lighting is included on the floor plans and the Lighting Type exhibit. Exterior lighting will be low level, shielded fixtures conforming to the design guidelines including light trespass and dark sky requirements. Site photometric study shows no light trespass beyond the project site's property line.

Trees

The existing tree can be found on the Architectural and Landscape Site Plan. The proposed building location is in the same general location of the existing lodge. Tree protection notes can be found on the Landscape Plan. Evergreens and shrubs have been added to the front and side setbacks.

Circulation and Emergency Access

The site plan is currently being reviewed by the Truckee Fire Protection District for general conformance with emergency vehicle access needs. The design team will continue to coordinate with the department as the design progresses.

Signage

See Signage Types exhibit for current and proposed signage.

OVERALL SITE: AERIAL VIEW

NOTE:

PROPOSED LOT LINE ADJUSTMENT (LLA) DEPICTED IN THIS EXHIBIT IS PENDING APPROVAL BY THE TOWN OF TRUCKEE, AND WILL BE FILED UNDER SEPARATE APPLICATION.

PROPOSED PARCEL COVERAGE	
LODGE	11,038
DECK/ENTRANCE	7,794
ROAD/SIDEWALK	14,392
LIFTS	1,352
TOTAL	**34,576**
PARCEL SIZE (SF)	115,053
PARCEL SIZE (AC)	2.64
COVERAGE	**30%**

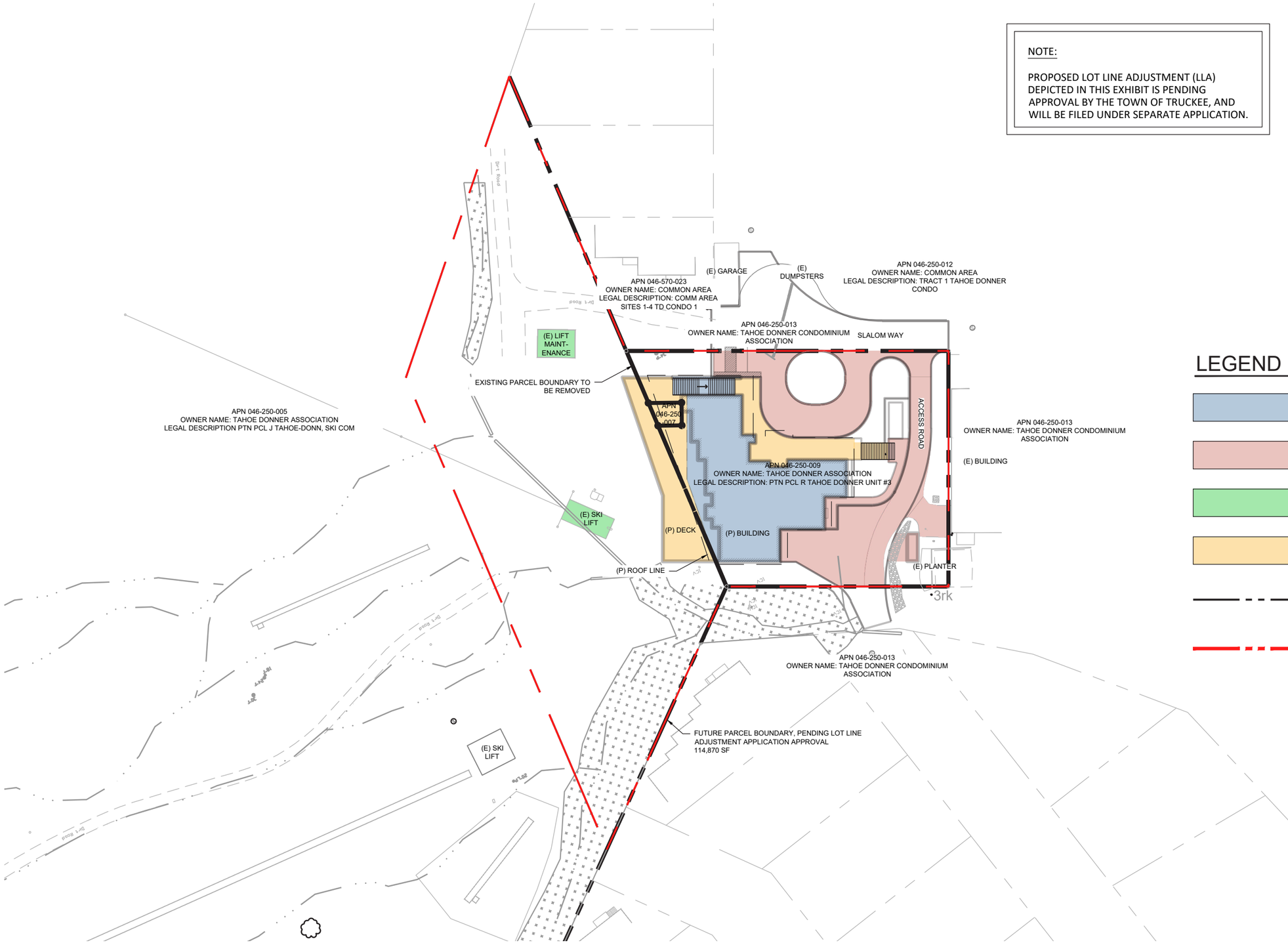

LEGEND

- BUILDING COVERAGE
- ROAD / WALKWAY COVERAGE
- LIFT COVERAGE
- DECK / ENTRANCE COVERAGE
- EXISTING PARCEL BOUNDARY TO BE REMOVED
- PROPOSED PARCEL BOUNDARY, PENDING LOT LINE ADJUSTMENT APPROVAL, SEE NOTE

GRAPHIC SCALE

80 0 40 80

1 INCH = 80 FEET

PRELIMINARY LOT LINE ADJUSTMENT EXHIBIT

TAHOE DONNER

EXISTING SURROUNDING PHOTOS

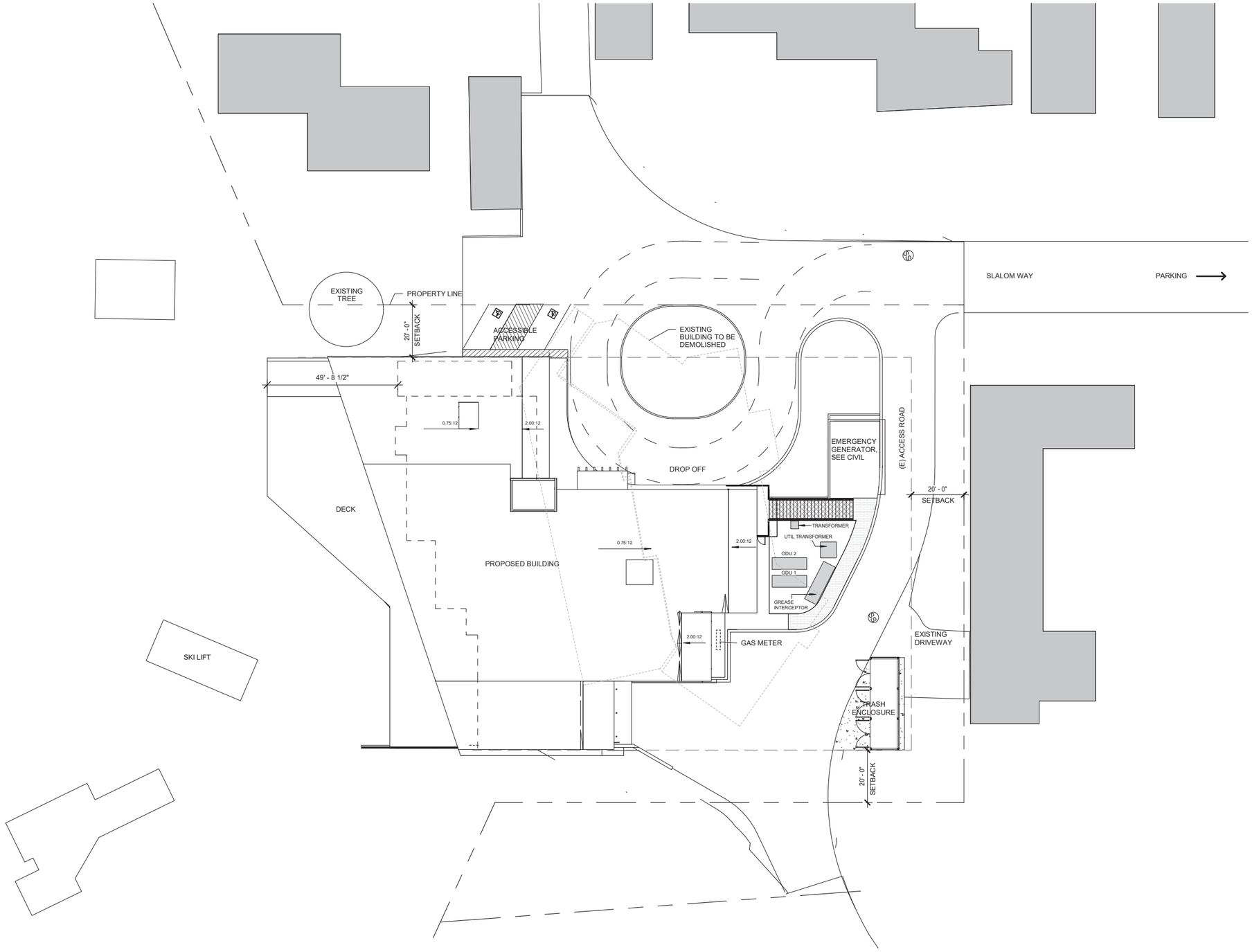

ARCHITECTURAL SITE/ROOF PLAN

0 20 40 80

N

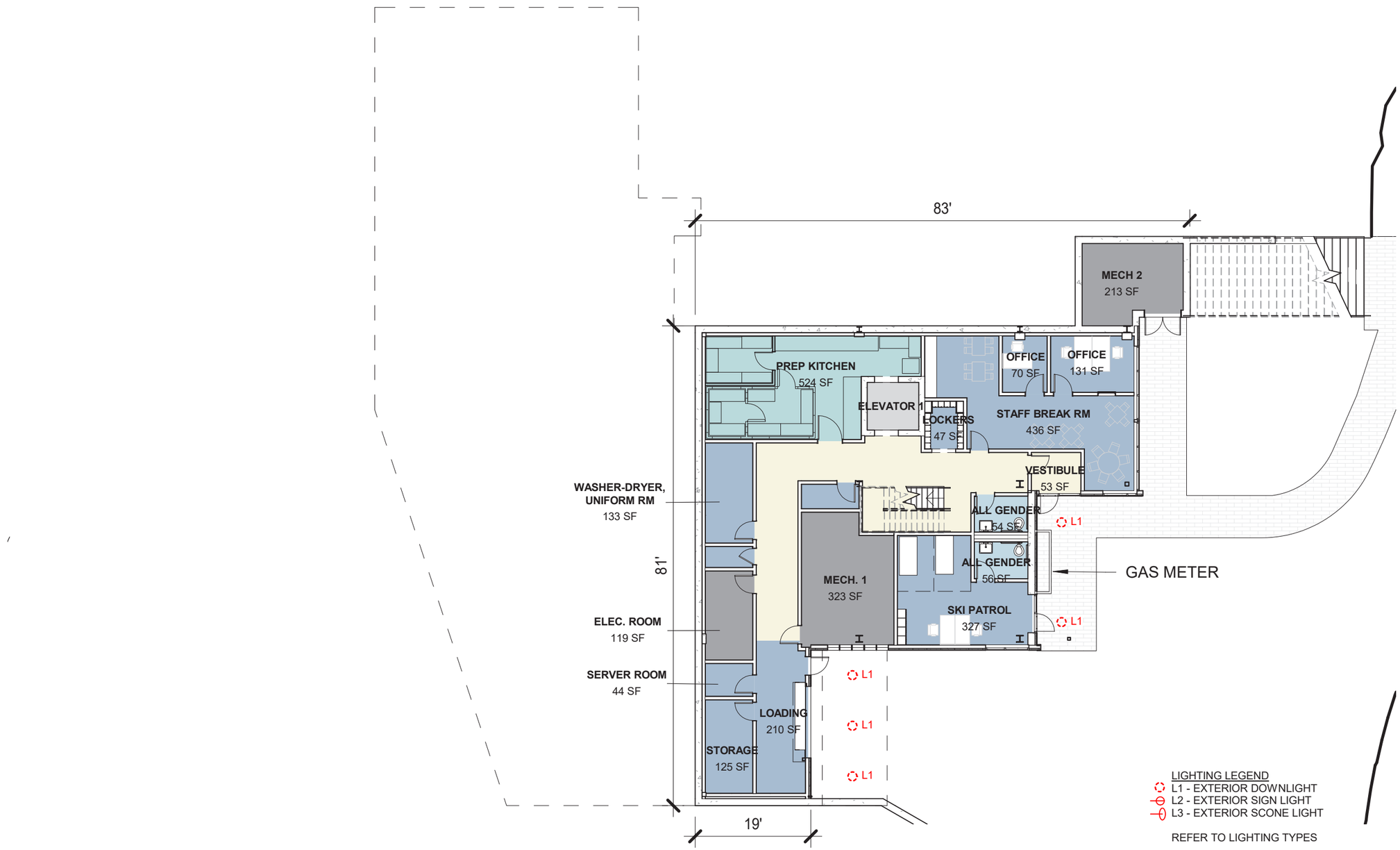

FLOOR PLAN - LEVEL 1

0 10 20 40

N

FLOOR PLAN - LEVEL 2 (UPDATED)

0 10 20 40

N

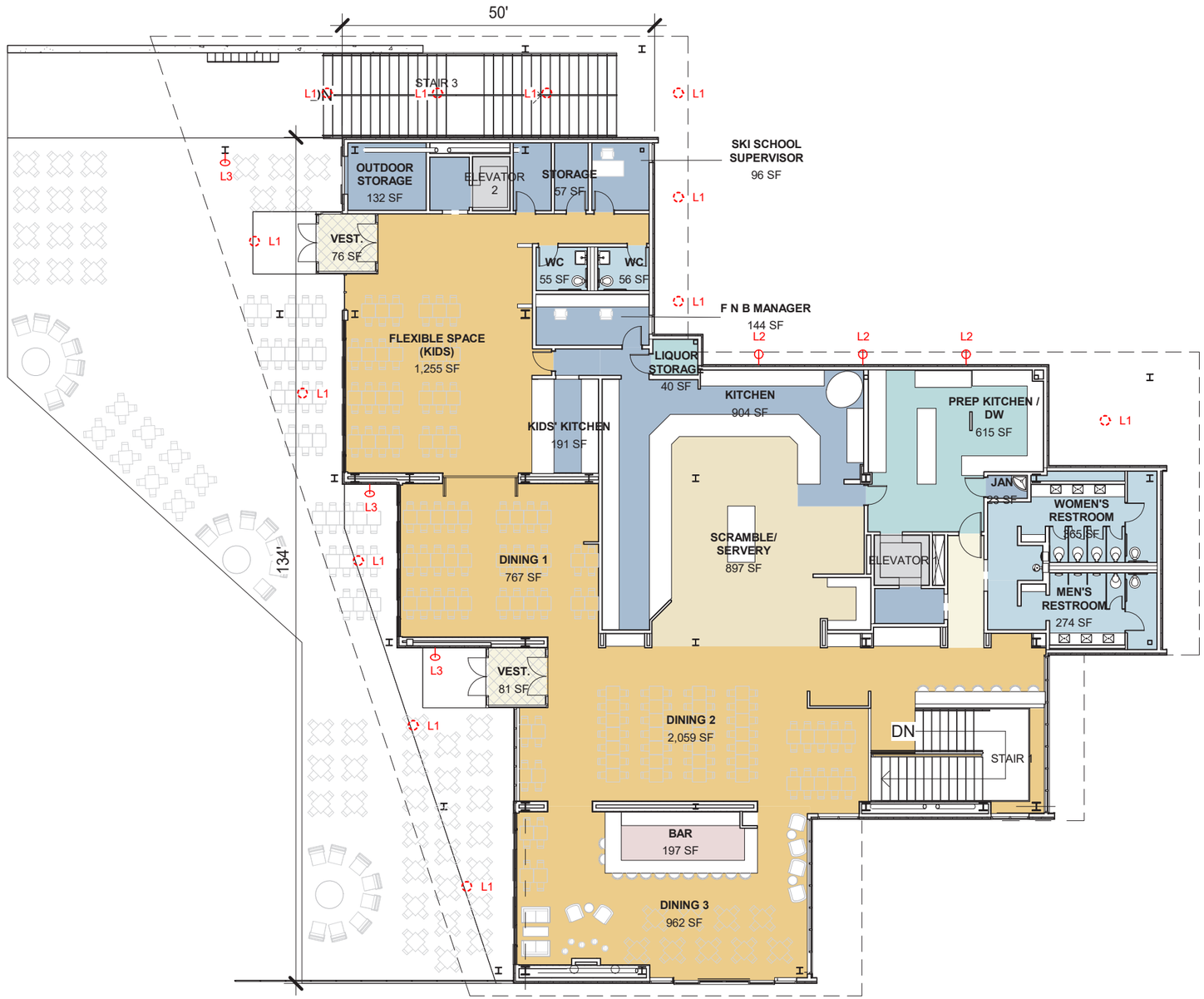

FLOOR PLAN - LEVEL 3 (UPDATED)

0 10 20 40

N

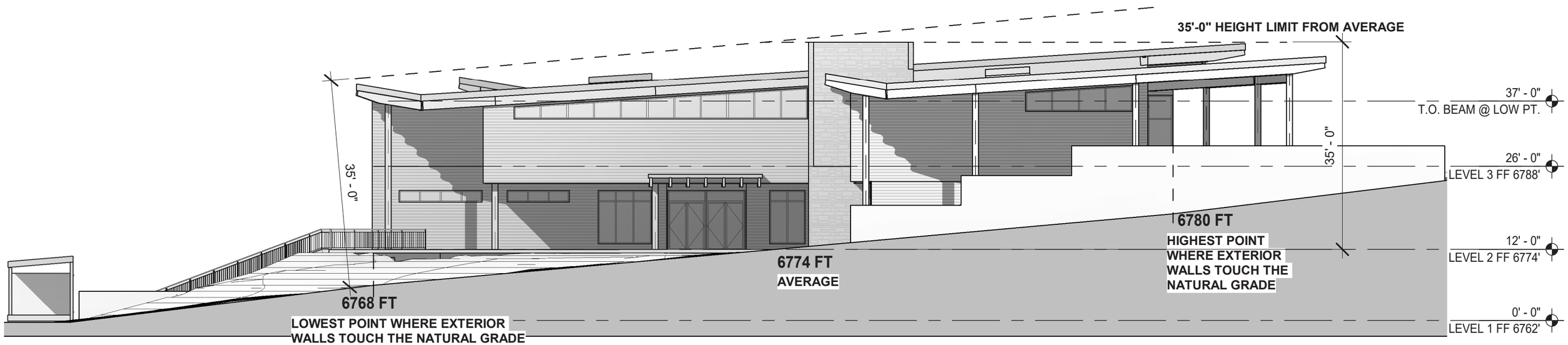

WEST ELEVATION / MAXIMUM HEIGHT DIAGRAM (UPDATED)

0' 8' 16' 32'

EXTERIOR VIEW/ELEVATION - STREET (WEST) SIDE

EXTERIOR VIEW/ELEVATION - SKI LIFT (SOUTH) SIDE

EXTERIOR VIEW/ELEVATION - NORTH-EAST SIDE

EXTERIOR VIEW/ELEVATION - SOUTH-EAST SIDE

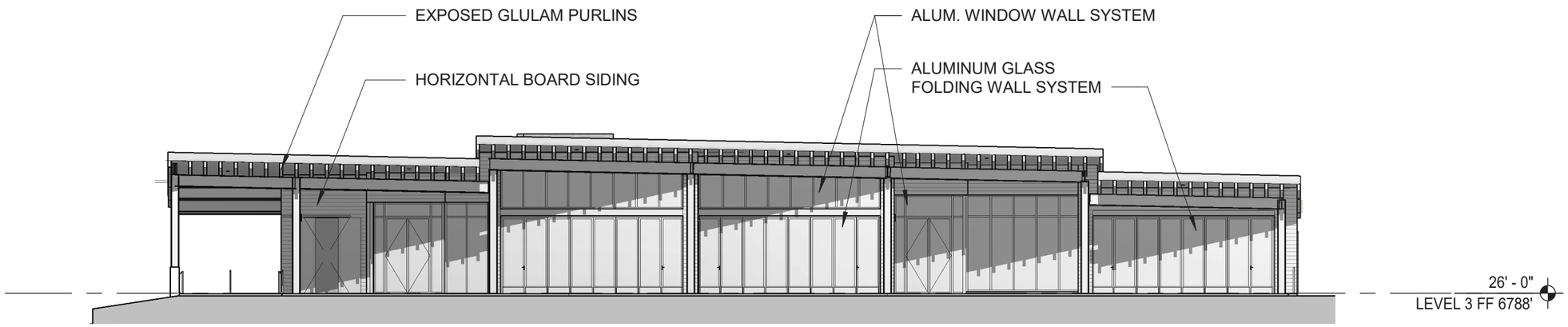

SOUTH ELEVATION

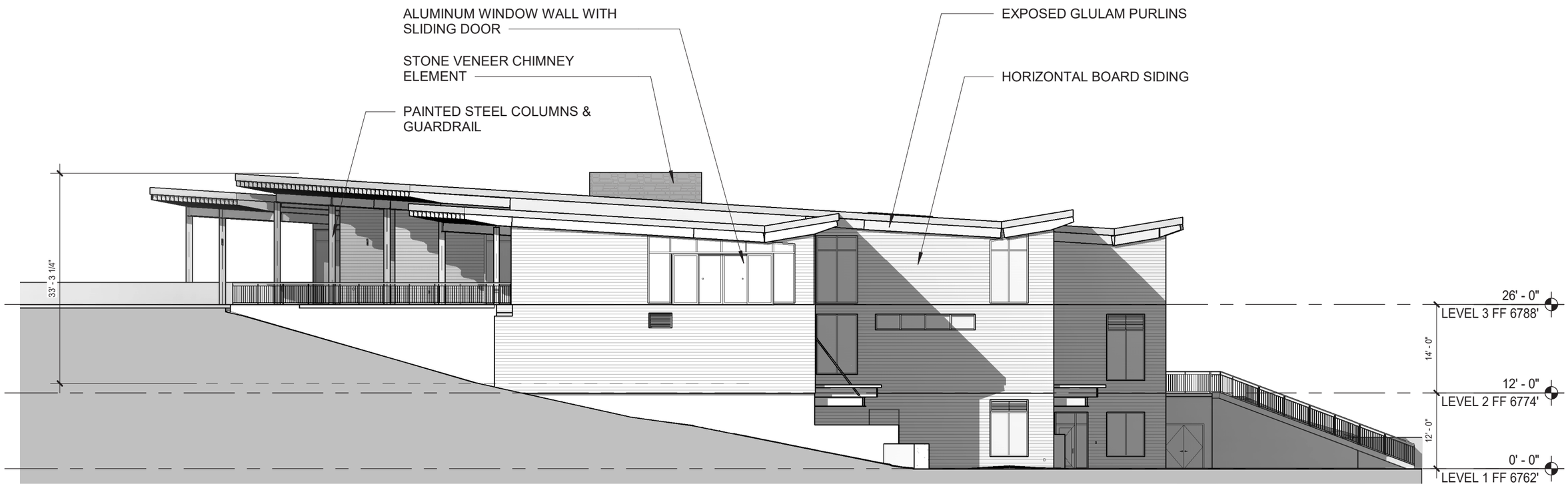

EAST ELEVATION

SOUTH AND EAST ELEVATION

0' 8' 16' 32'

NORTH ELEVATION

NORTH ELEVATION

0' 8' 16' 32'

PVC MEMBRANE ROOFING

MEDIUM GREY

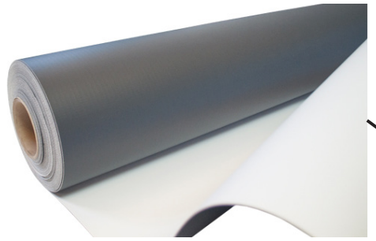

STAINED POLY-ASH EXTERIOR BOARD SIDING

COLOR: NATURAL

OCEAN PEARL NATURAL LEDGE STONE VENEER, BY ROCK GARDEN TRUCKEE

KYNAR FINISH ALUMINUM WINDOW WITH INSULATED GLAZING

KYNAR COLOR: MEDIUM BRONZE

MEDIUM STILE STOREFRONT DOORS.

COLOR: MEDIUM BRONZE

CONCRETE PAVING WITH LIGHT SAND BLASTED EXPOSED AGGREGATE

STAIR RAILING & GUARDRAIL - HIGH PERFORMANCE PAINT COLOR: MEDIUM BRONZE

HEAVY TIMBER STAINED GLU-LAM BEAMS WITH METAL CAPS AT EXPOSED ENDS

STEEL BEAM & COLUMNS - HIGH PERFORMANCE PAINT; PRE-FINISH METAL FASCIA. COLOR: MEDIUM BRONZE

STAINED POLY-ASH EXTERIOR BOARD SIDING

COLOR: CEDAR

STAINED POLY-ASH EXTERIOR BOARD SIDING

COLOR: DARK BARK

CAST-IN-PLACE CONCRETE

ARCHITECTURE AND EXTERIOR MATERIAL BOARD

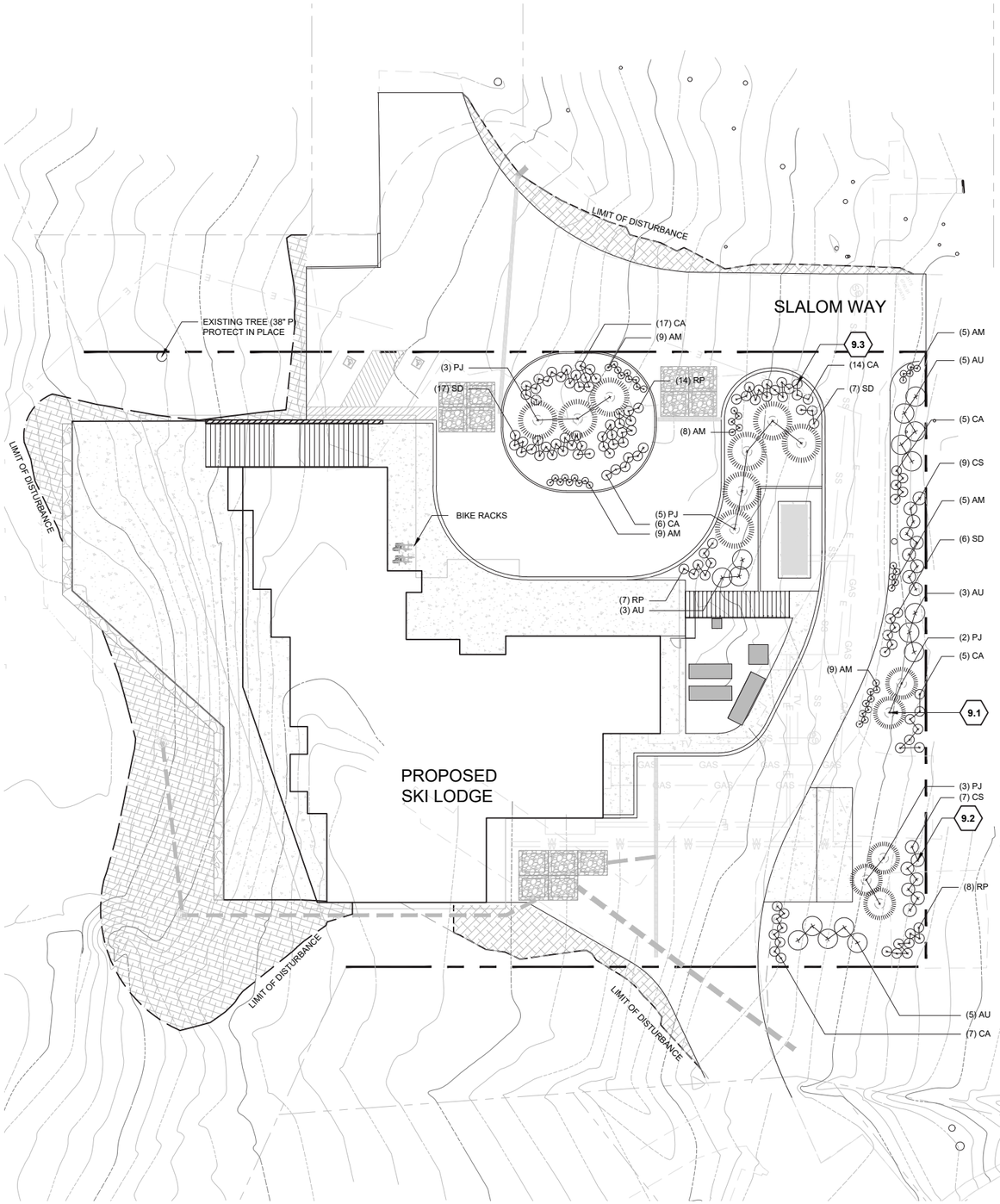

PLANT LIST

ABBR.	QTY.	BOTANICAL NAME	COMMON NAME	TYPE	SPACING
		EVERGREEN TREES			
PJ	13	*Pinus jeffreyi*	Jeffery Pine	8' Tall	See Plan
		DECIDUOUS SHRUBS			
AU	16	*Amelanchier utahensis*	Utah Serviceberry	5 gal.	72" O.C.
CS	16	*Cornus stolonifera*	Redtwig Dogwood	5 gal.	60" O.C.
SD	26	*Spirea densiflora*	Mountain Spirea	5 gal.	36" O.C.
RP	29	*Ribes parviflorus*	Thimbleberry	5 gal.	36" O.C.
		PERENNIALS & GROUNDCOVERS			
CA	57	*Calamagrostis x acutiflora 'Karl Foerster'*	Feather Reed Grass	1 gal.	36" O.C.
AM	42	*Achilliea milliefolium*	Yarrow	1 gal.	24" O.C.

PLANTING LEGEND

PROPOSED EVERGREEN TREE

PROPOSED DECIDUOUS SHRUB

REVEGETATION 5,999 SF

LANDSCAPE PLANTING NOTES

1. Refer to Civil plans for site layout, drainage, final grading and utilities. Information shown on Civil plans shall take precedence over landscape plans.
2. Trees shall bear same relation to finished grade as it bore to existing.
3. Trees to be planted a minimum of 4 feet from face of building, or pavement, except as approved by Owner's Representative.
4. All vegetation and irrigation shall be consistent with the requirements of the Town of Truckee Development Code and Water Efficient Landscapes.
5. All areas disturbed by construction shall be revegetated and restored.
6. Dust control measures shall be in place during construction. Broadcast mulch shall not be permitted as a dust control measure within 35 feet of structures.
7. Fencing, bollards and boulders as seen on the plan shall be in place to restrict parking to approved parking surfaces only.
8. All plants shall be irrigated with low flow drip irrigation.
9. The proposed plant palette includes sufficient drought-resistant species to reduce the demand for gas-powered landscape maintenance equipment.
10. Certified, weed-free, imported erosion-control materials shall be used. Construction supervisors and mangers shall be educated about noxious weed identification and the importance of controlling and preventing their spread.

REVEGETATION NOTES

1. All areas disturbed by construction activities shall be revegetated if not shown improved with another material. Additional revegetation may be required beyond what is shown on plans.
2. A minimum of two inches (2") of topsoil shall be placed on all disturbed areas. Topsoil shall include all of the organic-rich layer of soil immediately under the duff layer. Topsoil shall be stored with minimal handling and no compaction, and it should not be mixed with spoil material.
3. Disturbed areas that are compacted or have experienced heavy vehicle and equipment use shall be plowed with a ripper or other deep tillage implement where feasible to a depth of 6"-12". Soil may be loosened with a backhoe bucket equipped with cutting teeth if loosening is done such that clods remain and soil is not pulverized or inverted. Following soil loosening, all further equipment traffic shall be eliminated from the planting area.
4. Areas should be irrigated by a low-flow irrigation system approximately once every three (3) weeks. The goal for all revegetated areas is to minimize irrigation needs and discontinue the need for irrigation after a maximum of three (3) growing seasons.
5. Following seeding and planting, all revegetation areas shall be mulched with pine needles. Pine needles shall be applied evenly to the entire area to a depth of one inch (1") if applied by blower or two inches (2") if applied by hand.

NATIVE REVEGETATION (SEED MIX)

At	*Artemisia tridentata*	Mtn. Big Sagebrush
En	*Ericameria nauseosa*	Rubber Rabbitbrush
Ll	Lupinus lepidus	Pacific lupine
Wm	*Wyethia mollis*	Mules Ears

TREE PROTECTION NOTES

Truckee Development Code section 18.30.155

1. Fencing at the dripline or at the limits of grading should they be located within the dripline shall be installed prior to the start of any grading or construction activity. This requirement shall be noted on all relevant construction and grading plans. If the dripline fencing is determined to unreasonably obstruct construction access or operations, the review authority may allow modifications to this requirement, including temporary construction paving within a tree's dripline.
2. No grade cuts whatsoever shall occur within six feet of the trunk of a tree to be retained and no grade cuts shall occur within the dripline of such tree, except that when recommended by a certified arborist or Registered Professional Forester, grade cuts not to exceed a maximum of one foot in depth may be permitted when not closer than six feet of the trunk and not exceeding one-third of the area of the dripline of the tree; provided, however, that higher standards may be applied by the review authority.
3. No fill whatsoever shall be placed within six feet of the trunk of a tree to be retained, and no fill shall be placed within the dripline of such tree, except that when recommended by a certified arborist or Registered Professional Forester, up to one-third of the area of the dripline of such tree may be filled not exceeding a maximum depth of one foot, with no fill whatsoever placed within six feet of the trunk; provided, however, that higher standards may be applied by the review authority.
4. No mechanical trenching whatsoever shall be allowed within the dripline of a tree to be retained. It if is absolutely necessary to install underground utilities within the dripline of a tree, the trench shall be hand dug in the vicinity of major trees to prevent root cutting and mangling which may be caused by heavy equipment.
5. Support roots that are inside the dripline of the tree shall be protected.
6. Cross-section drawings of proposed grading may be required where trees are located adjacent to roadways, new slopes or critical areas.
7. Drainage changes shall be minimized within driplines of trees to be retained.
8. No irrigation system shall be installed within the dripline of a tree which may be detrimental to the preservation of the tree unless specifically authorized by the review authority or the Town Planner.
9. Paving within the dripline of a tree to be retained should be stringently minimized, with no paving whatsoever within six feet of the trunk. When paving is absolutely necessary within the dripline, porous material should be used, and not cover more than one-third of the area of the dripline.

LANDSCAPE PLAN

0 20 40 80

N

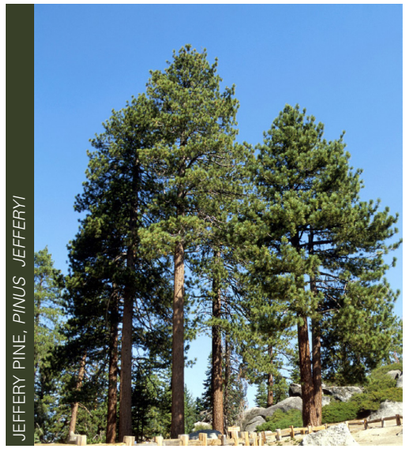

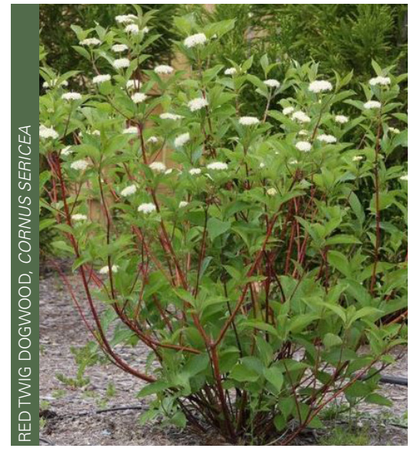

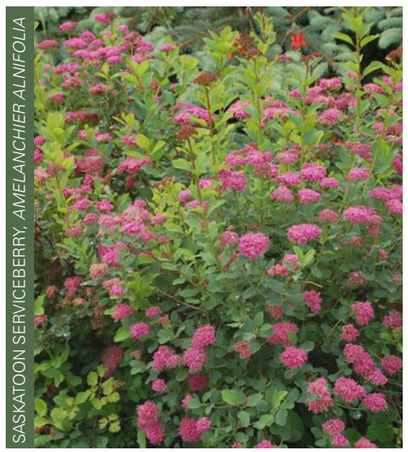

EVERGREEN TREE
DECIDUOUS TREE
SHRUB
GRASS
PERENNIAL

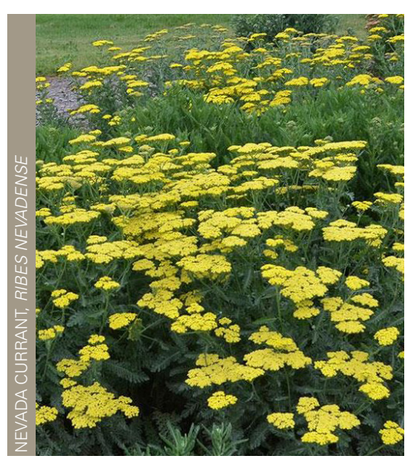

Worksheet A - Water Efficient Landscape Worksheet

This worksheet shall be filled out by the project applicant and is required to be submitted with the Landscape Design Plan. Please fill in the blue cells.
This form is required for the following projects:
- All projects that propose landscaping 2,500 s.f. or greater; and
- Projects with 500 s.f. or more but less than 2,500 s.f. of landscaping that are not proposing use of the prescriptive approach (Worksheet C) and/or the low water use plant area is less than 75%.

A project applicant shall complete the Water Efficient Landscape Worksheet which contains information on the plant factor, irrigation method, irrigation efficiency, and area associated with each hydrozone. Calculations are then made to show that the evapotranspiration adjustment factor (ETAF) for the landscape project does not exceed a factor of 0.55 for residential areas and 0.45 for nonresidential areas, exclusive of Special Landscape Areas. The ETAF for a landscape project is based on the plant factors and irrigation methods selected. The Maximum Applied Water Allowance is calculated based on the maximum ETAF allowed (0.55 for residential areas and 0.45 for non-residential areas) and expressed as annual gallons required. The Estimated Total Water Use (ETWU) is calculated based on the plants used and irrigation method selected for the landscape design. ETWU must be below the MAWA.

Prior to land use approval: Submit a Landscape Plan identifying hydrozones, locations, and types of plantings; submit a conceptual irrigation plan; and submit Worksheet A (this form).
Prior to building permit issuance: Submit a Landscape Plan, Irrigation Design Plan, and Worksheet A (this form).
Prior to final: Submit an irrigation schedule, maintenance scheule, and a Certificate of Compliance (Worksheet B). For single-family residential projects, submit these documents to the owner for reference.

Project Name:	Tahoe Donner Lodge
Planning Application or Building Permit	
Reference Evapotranspiration (ETo) =	36.2
Is this a residential project?	No

Regular Landscape Areas

Hydrozone #/ Planting Description[a]	Water Use (WUCOLS Website)	Plant Factor (PF)[b]	Irrigation Method[c]	Irrigation Efficiency (IE)[d]	ETAF[e] (PF/IE)	Landscape Area (sq. ft.)	ETAF x Area	Estimated Total Water Use (ETWU)[f]
Trees	Moderate	0.40	Drip	0.81	0.5	800	395	8,867
Trees	Low	0.10	Drip	0.81	0.1	695	86	1,926
Shrubs	Moderate	0.40	Drip	0.81	0.5	1,600	790	17,734
Shrubs	Low	0.10	Drip	0.81	0.1	2,029	250	5,622
	[Choose one]		[Choose one]		0.0		-	-
	[Choose one]		[Choose one]		0.0		-	-
	[Choose one]		[Choose one]		0.0		-	-
	[Choose one]		[Choose one]		0.0		-	-
					Totals	5,124	1,521	34,148
					Average ETAF for Regular Landscape Areas		0.30	

If it is a residential project:
If it is a non-residential project: **The Average ETAF complies**

Average ETAF for Regular Landscape Areas must be 0.55 or below for residential areas and 0.45 or below for non-residential areas.

Special Landscape Areas (SLA) - Areas of the landscape dedicated soley to edible plants, recreational areas (excluding single-family residential areas), areas irrigated with recycled water, or water features using recycled water.

Hydrozone #/ Planting Description[a]	Water Use (WUCOLS Website)	Plant Factor (PF)[b]	Irrigation Method[c]	Irrigation Efficiency (IE)[d]	ETAF[e] (PF/IE)	Landscape Area (sq. ft.)	ETAF x Area	Estimated Total Water Use (ETWU)[f]
					1		0	-
					1		0	-
					1		0	-
					1		0	-
					1		0	-
					1		0	-
					1		0	-
					1		0	-
					Totals	0	0	-

Estimated Total Water Use (ETWU) Total	34,148
Maximum Allowed Water Allowance (MAWA) for Residential Areas[g]	63,252
Maximum Allowed Water Allowance (MAWA) for Non-Residential Areas[g]	51,751

To comply with this chapter, the ETWU must be equal to or less than the MAWA.
If it is a residential project:
If it is a non-residential project: **The ETWU complies with the MAWA**

[a] Hydrozone#/Planting Description Examples: 1) Front lawn; 2) Low water use plantings; 3) medium water use planting

[b] Plant Factor (PF) is a factor, when multipled by ETo, estimates the amount of water needed by plants. The plant factor range for very low water use plants: 0.1; for low water use plants: 0.2; for moderate water use plants: 0.5; and high water use plants: 0.8. Surface area of a water features shall be included in the high use hydrozone area (1). Temporarily irrigated areas shall be included in the low water use hydrozone. Plant factors are derived from the Water Use Classification of Landscape Species published by the University of California Cooperative Extension, and the Department of Water Resources 2014 (http://ucanr.edu/sites/WUCOLS/Plant_Search/). Plant factors may also be obtained from horticultural researchers from academic institutions or professional associations as approved by the California Department of Water Resources.
[c] Irrigation Method: Overhead spray or drip
[d] Irrigation Efficiency: 0.75 for spray head; 0.81 for drip
[e] ETAF: Estimated Total Adjustment Factor. Factor of 0.55 for residential areas and 0.45 for non-residential areas, that, when applied to reference evapotranspiration, adjusts for plant factors and irrigation efficiency, two major influences upon the amount of water that needs to be applied to the landscape. The ETAF for new and existing (non-rehabilitated) Special Landscape Areas shall not exceed 1.0. The ETAF for existing non-rehabilitated landscapes is 0.8.
[f] ETWU (Annual gallons required): Eto x 0.62 x ETAF x Area (0.62 is a conversion factor that converts acre-inches per acre per year to gallons per square foot per year)

[g] MAWA (Annual Gallons Allowed): (Eto)(0.62)[(ETAF x LA) + ((1-ETAF) x SLA)]

0.62	= conversion factor that converts acre-inches per acre per year to gallons per square foot per year
LA	= total landscape area in square feet
SLA	= total special landscape area in square feet
ETAF	= Evapotranspiration Adjustment Factor, which adjusts for plant factors and irrigation efficiencies;

PLANT PALETTE

LEGEND:

- SHUTTLE ROUTE #1
- SHUTTLE ROUTE #2
- ROUTE DIRECTION
- PEDESTRIAN PATH OF TRAVEL
- EXIST. STREET PARKING
- EXIST. PARKING LOTS
- ADA PARKING AREAS

TOTAL PARKING COUNT:

	Std. Stalls	ADA Stalls
Lot 1	50	
Lot 2	39	
Lot 3	34	
Lot 4	60	1
Lot 5	49	6
Street parking	85	
TD Ski Lodge		2
TOTAL	317	9

GRAPHIC SCALE

100 0 50 100

1 INCH = 100 FEET

EXISTING PARKING LOTS AND CIRCULATION EXHIBIT (UPDATED)

LEGEND:

- EXIST. PROPERTY LIMIT
- EXIST. STREET PARKING
- (10) (E) PARKING LOT NUMBER

STREET PARKING COUNT:

Street Name	Std. Stalls
Snowpeak Way	61
Slalom Way	24
TOTAL	85

GRAPHIC SCALE

150 0 75 150

1 INCH = 150 FEET

EXISTING OFFSITE PARKING (UPDATED)

LEGEND:

- EXIST. PARKING LOT
- EXIST. PROPERTY LINE
- EXIST. PARKING LOT LINE STRIPING
- EXIST. ADA PARKING SPACE
- (10) EXIST. PARKING LOT NUMBER

EXISTING PARKING COUNT

	Std. Stalls	ADA Stalls
Lot 1	50	0
Lot 2	39	0
TOTAL	89	0

* ALL REGULAR SPACES ARE STRIPED APPROXIMATELY 9' X 18'.

EXISTING COVERAGE AREA

APN	Area		%
	Total	Asphalt	
046-050-001	112,179	17,908	15.96%
046-050-002	122,198	49,867	40.81%

GRAPHIC SCALE

30 0 15 30

1 INCH = 30 FEET

EXISTING PARKING AREA LOT 1 & 2 (UPDATED)

LEGEND:

- EXIST. PARKING LOT
- EXIST. PROPERTY LINE
- EXIST. PARKING LOT LINE STRIPING
- EXIST. ADA PARKING SPACE
- (10) EXIST. PARKING LOT NUMBER

EXISTING PARKING COUNT

	Std. Stalls	ADA Stalls
Lot 3	34	0
Lot 4	60	1
TOTAL	94	1

* ALL REGULAR SPACES ARE STRIPED APPROXIMATELY 9' X 18'.

EXISTING COVERAGE AREA

APN	Area		%
	Total	Asphalt	
046-050-001	112,179	17,908	15.96%
046-050-002	122,198	49,867	40.81%

GRAPHIC SCALE

30 0 15 30

1 INCH = 30 FEET

EXISTING PARKING AREA LOT 3 & 4 (UPDATED)

LEGEND:

- EXIST. PARKING LOT
- EXIST. PROPERTY LINE
- EXIST. PARKING LOT LINE STRIPING
- EXIST. ADA PARKING SPACE
- (10) EXIST. PARKING LOT NUMBER

EXISTING PARKING COUNT

	Std. Stalls	ADA Stalls
Lot 5	49	6
TOTAL	49	6

* ALL REGULAR SPACES ARE STRIPED APPROXIMATELY 9' X 18'.

EXISTING COVERAGE AREA

APN	Area		%
	Total	Asphalt	
046-040-002	38,478	19,963	51.88%

GRAPHIC SCALE

30 0 15 30

1 INCH = 30 FEET

EXISTING PARKING AREA LOT 5 (UPDATED)

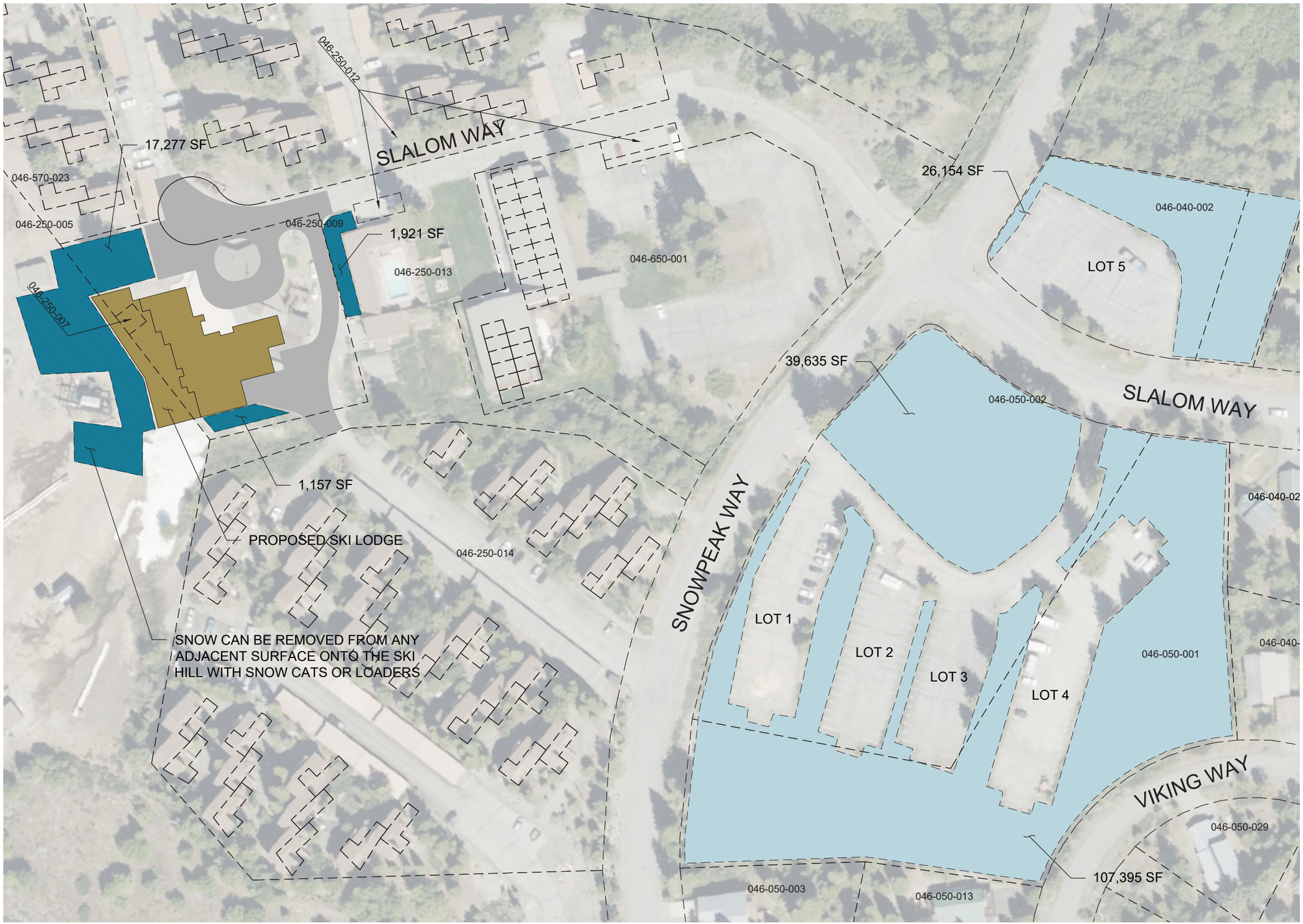

SNOW STORAGE LEGEND:

- SKI LODGE SITE
- PARKING LOT

PROVIDED SNOW STORAGE	AREA (sq ft)
LODGE(1)	20,355
PARKING LOTS(2)	173,184

(1) SKI LODGE HARDSCAPE, PAVING, SIDEWALKS & DECK AREA = 25,000 SF (APROX.), THEREFORE SNOW STORAGE REQUIRED IS 18,750 SF (75% OF AREA)

(2) PARKING LOTS PAVING = 92,086 SF. EXISTING SNOW STORAGE AREAS IS 173,184 SF

GRAPHIC SCALE

100 0 50 100

1 INCH = 100 FEET

SNOW STORAGE EXHIBIT (UPDATED)

LEGEND

EXISTING

- AC PAVING
- EDGE OF PAVEMENT
- PROPERTY LINE
- ADJACENT PROPERTY LINE
- SETBACK
- CENTERLINE OF DRIVE
- ROAD CENTERLINE
- SNOW STORAGE OR DRAINAGE EASEMENT
- MULTI-PURPOSE EASEMENT
- DRIVEWAY AND PUBLIC UTILITY EASEMENT
- OVERHEAD ELECTRIC
- UNDERGROUND UTILITY
- OVERHEAD UTILITY
- GAS LINE
- WATER LINE
- SEWER LINE
- STORM DRAIN CULVERT
- JOINT UTILITY POLE
- SANITARY SEWER MANHOLE
- ELECTRIC BOX
- TB — TELEVISION BOX
- WATER METER
- WATER VALVE
- ICV — IRRIGATION VALVE
- OR — SIGN
- TREE (SIZE VARIES)
- 6245 — INDEX CONTOUR W/ ELEV
- INTERMEDIATE CONTOUR
- GRADE BREAK
- FLOWLINE
- ROCK OR BOULDER
- #SPECIES — TREE (SIZE & TYPE VARIES)
- BENCHMARK
- VEGETATION

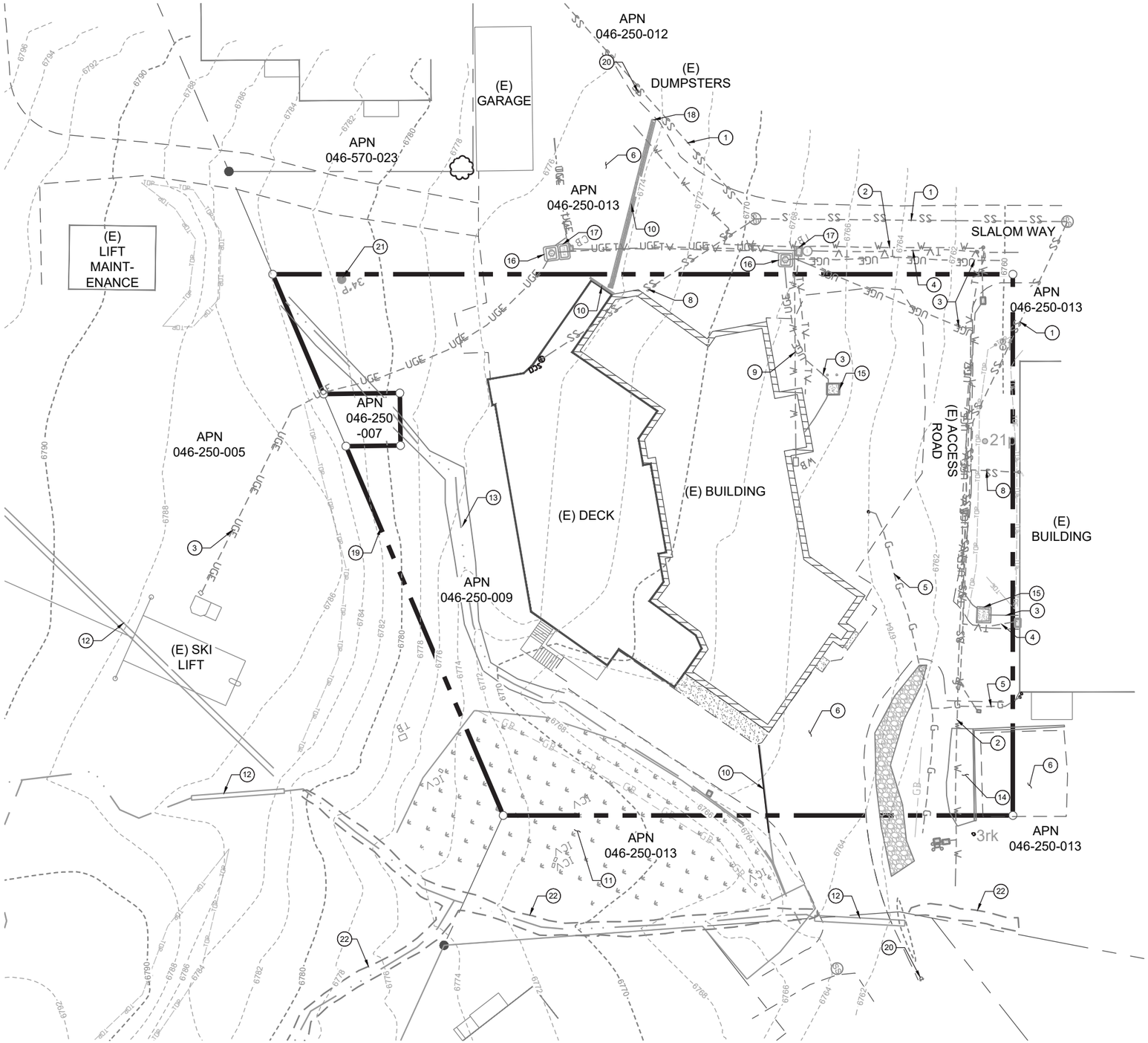

EXISTING SITE PLAN KEYNOTES

1. (E) SEWER LINE
2. (E) WATER LINE
3. (E) ELECTRICAL LINE
4. (E) COMMUNICATIONS LINE
5. (E) GAS LINE
6. (E) ASPHALT
7. NOT USED
8. (E) SEWER LATERAL
9. (E) WATER LATERAL
10. (E) SLOTTED DRAIN
11. (E) VEGETATION
12. (E) CULVERT
13. (E) DRAINAGE DITCH
14. (E) PLANTER BOX
15. (E) TRANSFORMER
16. (E) ELECTRIC VAULT
17. (E) COMMUNICATION BOX
18. (E) SLOTTED DRAIN OUTLET UNKNOWN
19. EXISTING LOT LINE TO BE REMOVED. PENDING FUTURE LLA APPLICATION APPROVAL.
    - (E) PARCELS 046-250-005, 046-250-007, AND 046-250-009 TO BE MERGED
20. (E) FIRE HYDRANT LOCATION(S)
21. (E) 34" PINE TO REMAIN
22. (E) OFF-SITE AQUATIC RESOURCE - WETLAND SWALE TO BE PROTECTED AND AVOIDED, AND LIMITS OF 100 YEAR FLOOD PLAIN DELINEATION (SEE DRAINAGE REPORT)

GRAPHIC SCALE

40 0 20 40

1 INCH = 40 FEET

C1 EXISTING SITE PLAN (UPDATED)

DEMO & EROSION CONTROL

- ROLLED EROSION CONTROL PRODUCT
- EXISTING TO BE DEMOLISHED
- SAWCUT
- SILT FENCE W/ FIBER ROLL
- FIBER ROLL
- SILT FENCE
- TEMPORARY CONSTRUCTION FENCE
- CONSTRUCTION FENCE
- REMOVE (E) UTILITY
- ABANDON (E) UTILITY
- DRAIN INLET PROTECTION
- GRAVEL OR FIBER ROLL CHECK DAM
- INDIVIDUAL TREE PROTECTION
- TREE TO BE REMOVED
- CONSTRUCTION ENTRANCE
- STOCKPILE / STAGING AREA

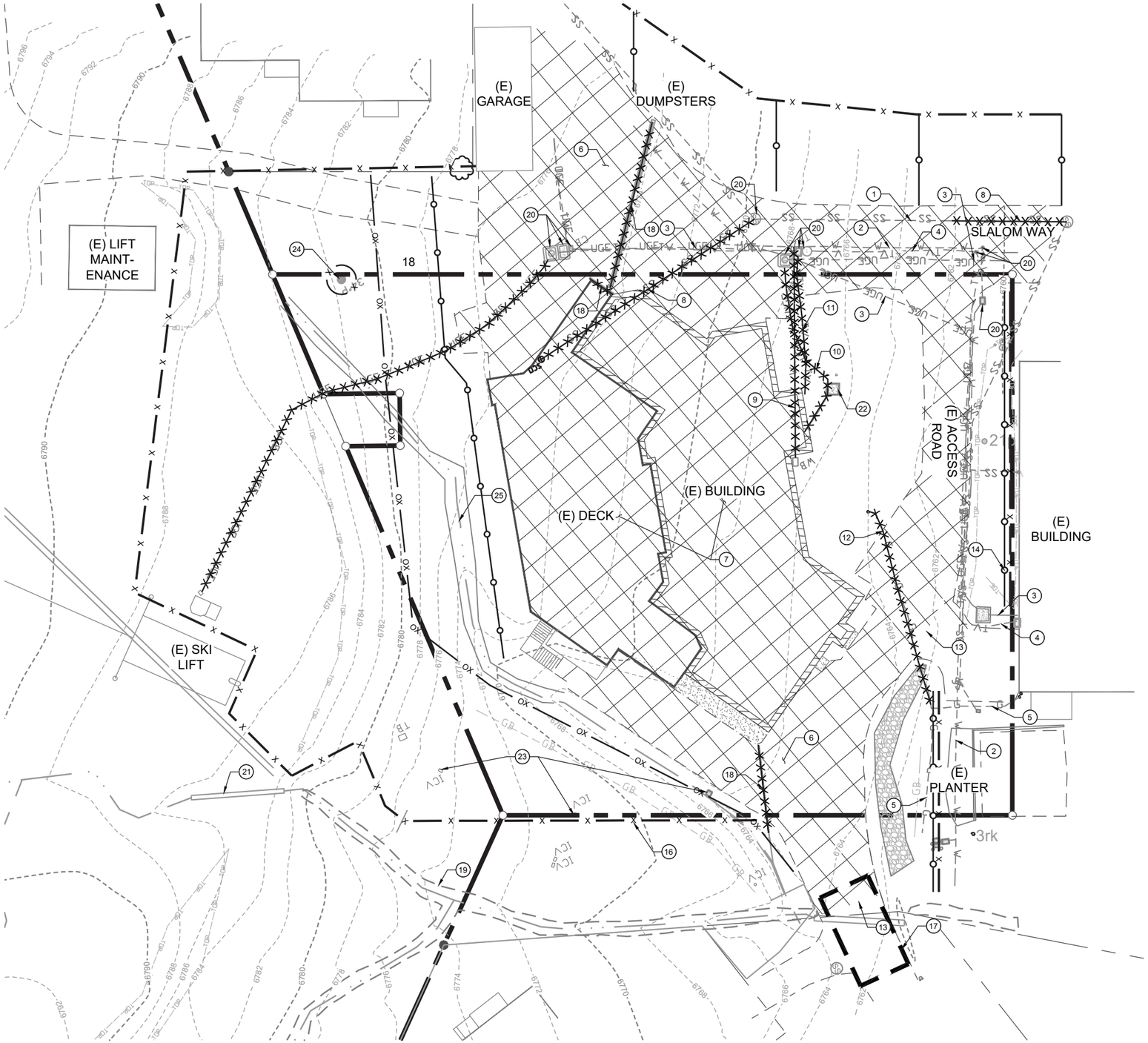

DEMOLITION KEYNOTES

1. PROTECT IN PLACE (E) SEWER LINE
2. PROTECT IN PLACE (E) WATER LINE
3. PROTECT IN PLACE (E) ELECTRICAL LINE
4. PROTECT IN PLACE (E) COMMUNICATIONS LINE
5. PROTECT IN PLACE (E) GAS LINE
6. REMOVE (E) ASPHALT
7. REMOVE (E) BUILDING, FOUNDATIONS, AND DECK
8. REMOVE (E) SEWER
9. REMOVE (E) WATER LINE
10. REMOVE (E) ELECTRICAL LINE
11. REMOVE (E) COMMUNICATIONS LINE
12. REMOVE (E) GAS LINE
13. SAWCUT (E) PAVEMENT
14. PROVIDE FIBER ROLLS, (TYP)
15. NOT USED
16. PROVIDE CONSTRUCTION FENCE, (TYP)
17. CONSTRUCTION ENTRANCE
18. REMOVE (E) SLOTTED DRAIN
19. (E) OFF-SITE AQUATIC RESOURCE - WETLAND SWALE TO BE PROTECTED AND AVOIDED, AND LIMITS OF 100 YEAR FLOOD PLAIN DELINEATION (SEE DRAINAGE REPORT)
20. PROTECT (E) UTILITY APPURTENANCES AND RESET TO FINISHED GRADE
21. REMOVE AND SALVAGE (E) CULVERT
22. REMOVE AND SALVAGE (E) TRANSFORMER
23. REMOVE (E) IRRIGATION
24. (E) 34" PINE TO REMAIN
25. (E) DRAINAGE SWALE TO BE ABANDONED

GRAPHIC SCALE

40 0 20 40

1 INCH = 40 FEET

C2 DEMOLITION AND EROSION CONTROL PLAN (UPDATED)

GRADING QUANTITIES

OVERALL CUT/FILL QUANTITIES:*
CUT= ± 4574 CY
FILL= ± 28 CY
NET= ± 4546 CY OF CUT

*QUANTITIES ARE APPROXIMATE AND SHALL NOT BE USED FOR ESTIMATING OR BIDDING PURPOSES.

MASS GRADING KEYNOTES

1. (P) BUILDING FOUNDATION ENVELOPE
2. (P) 5' PAD OVERBUILD

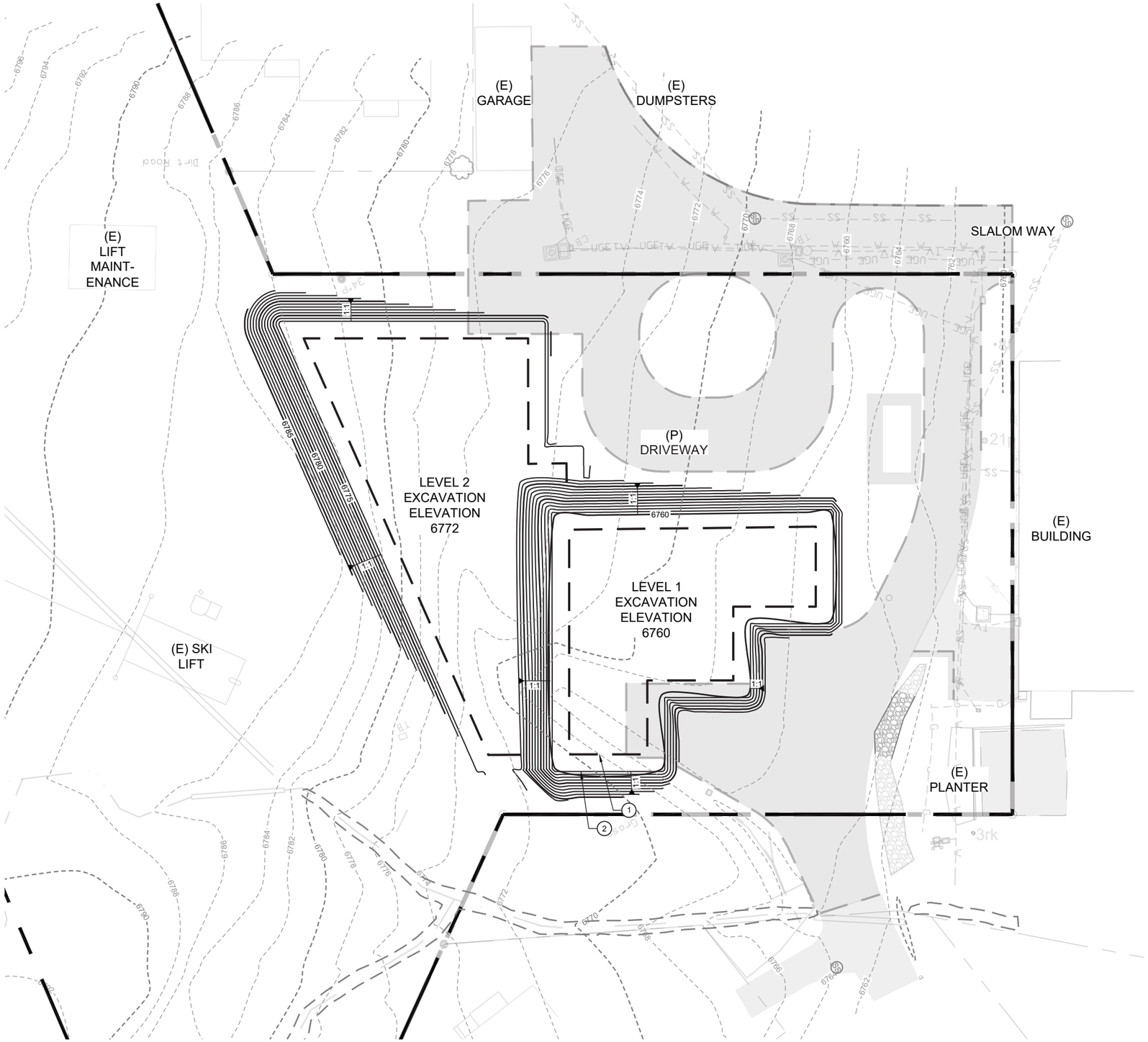

GRAPHIC SCALE
40 0 20 40
1 INCH = 40 FEET

C3 BUILDING PAD MASS GRADING PLAN (UPDATED)

LEGEND

PROPOSED

- AC PAVING
- PAVERS
- INFILTRATION TRENCH
- ROCK SLOPE PROTECTION
- CONCRETE PAD
- EDGE OF PAVEMENT
- EDGE OF SHOULDER/ CURB
- SANITARY SEWER
- WATERLINE
- NATURAL GAS LINE
- CABLE TV
- JOINT TRENCH
- UNDERGROUND ELEC
- STORM DRAIN
- TRENCH DRAIN
- GRADING LIMITS - FILL
- GRADING LIMITS - CUT
- GRADE BREAK
- SCO — SEWER CLEANOUT
- W — WATER METER
- W — WATER VALVE
- G — GAS REGULATOR ASSEMBLY
- SD — STORM DRAIN MANHOLE
- 6245 — INDEX CONTOUR W/ ELEV
- INTERMEDIATE CONTOUR

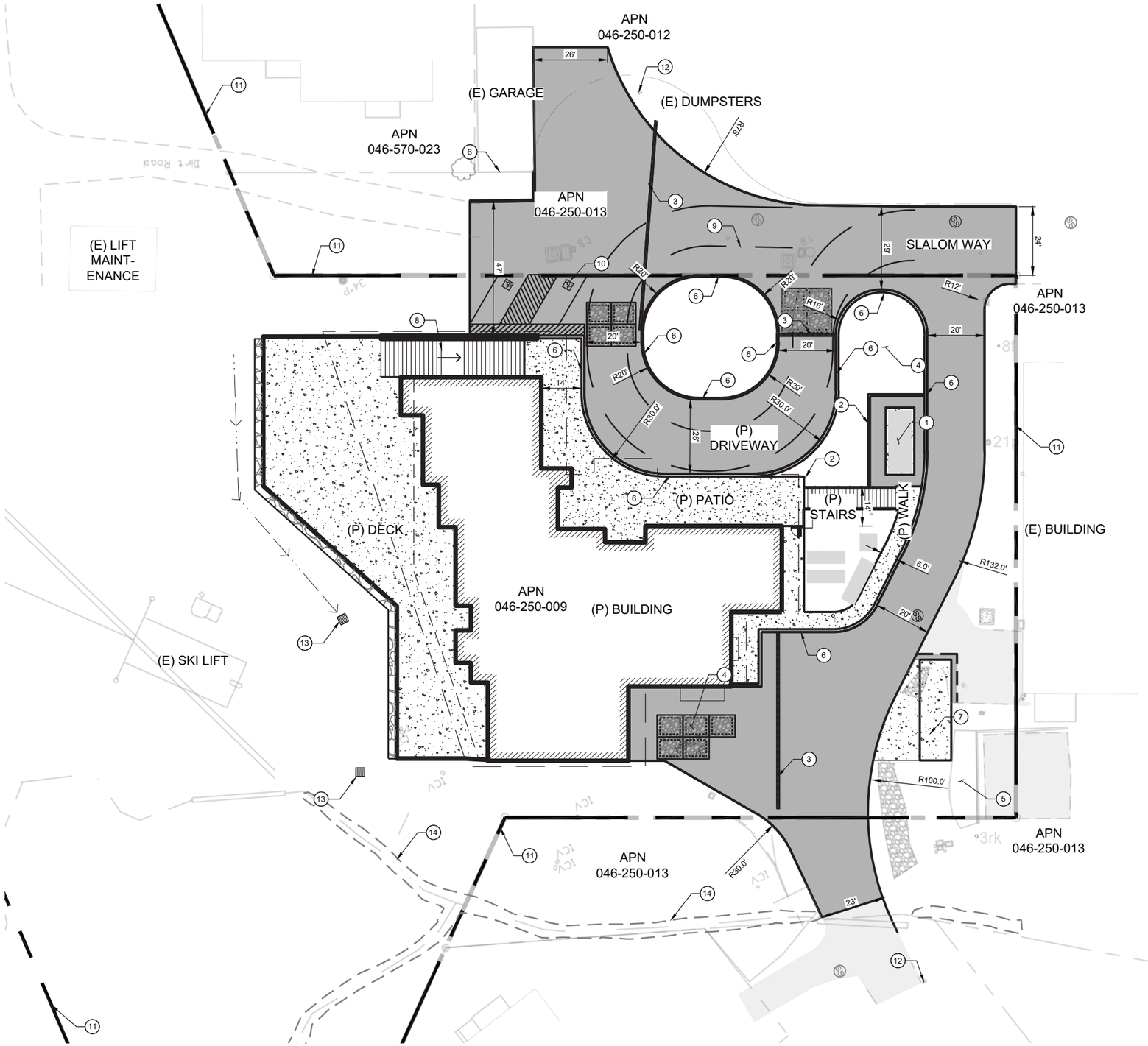

SITE PLAN KEYNOTES

1. (P) GENERATOR
2. (P) RETAINING WALL (5' MAX HEIGHT, SEE GRADING PLAN) WITH RAILING, SEE DETAIL BELOW.
3. (P) TRENCH DRAIN
4. (P) INFILTRATION CHAMBER(S)
5. (E) PLANTER
6. (P) CURB
7. (P) TRASH ENCLOSURE, SEE ARCHITECTURAL PLAN
8. (P) STAIRWAY LEVEL 2 TO LEVEL 3
9. FIRE TRUCK TURNING MOVEMENT
10. ADA PARKING
11. PENDING FUTURE LLA APPLICATION APPROVAL.
    - (E) PARCELS 046-250-005, 046-250-007, AND 046-250-009 TO BE MERGED
12. (E) FIRE HYDRANT LOCATION(S)
13. (P) DROP INLET, SEE GRADING PLAN
14. (E) OFF-SITE AQUATIC RESOURCE - WETLAND SWALE TO BE PROTECTED AND AVOIDED, AND LIMITS OF 100 YEAR FLOOD PLAIN DELINEATION (SEE DRAINAGE REPORT)

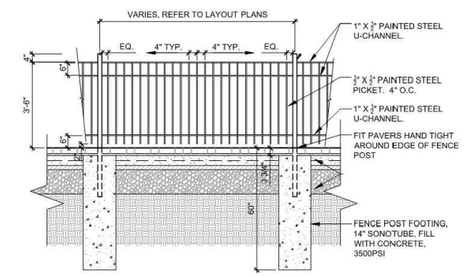

ELEVATION

RETAINING WALL w/ RAILING DETAIL

GRAPHIC SCALE

40 0 20 40

1 INCH = 40 FEET

C4 CIVIL SITE PLAN (UPDATED)

LEGEND

PROPOSED

- 6245 — INDEX CONTOUR W/ ELEV.
- 6246 — INTERMEDIATE CONTOUR W/ ELEV.
- OR — STORM DRAIN INLET

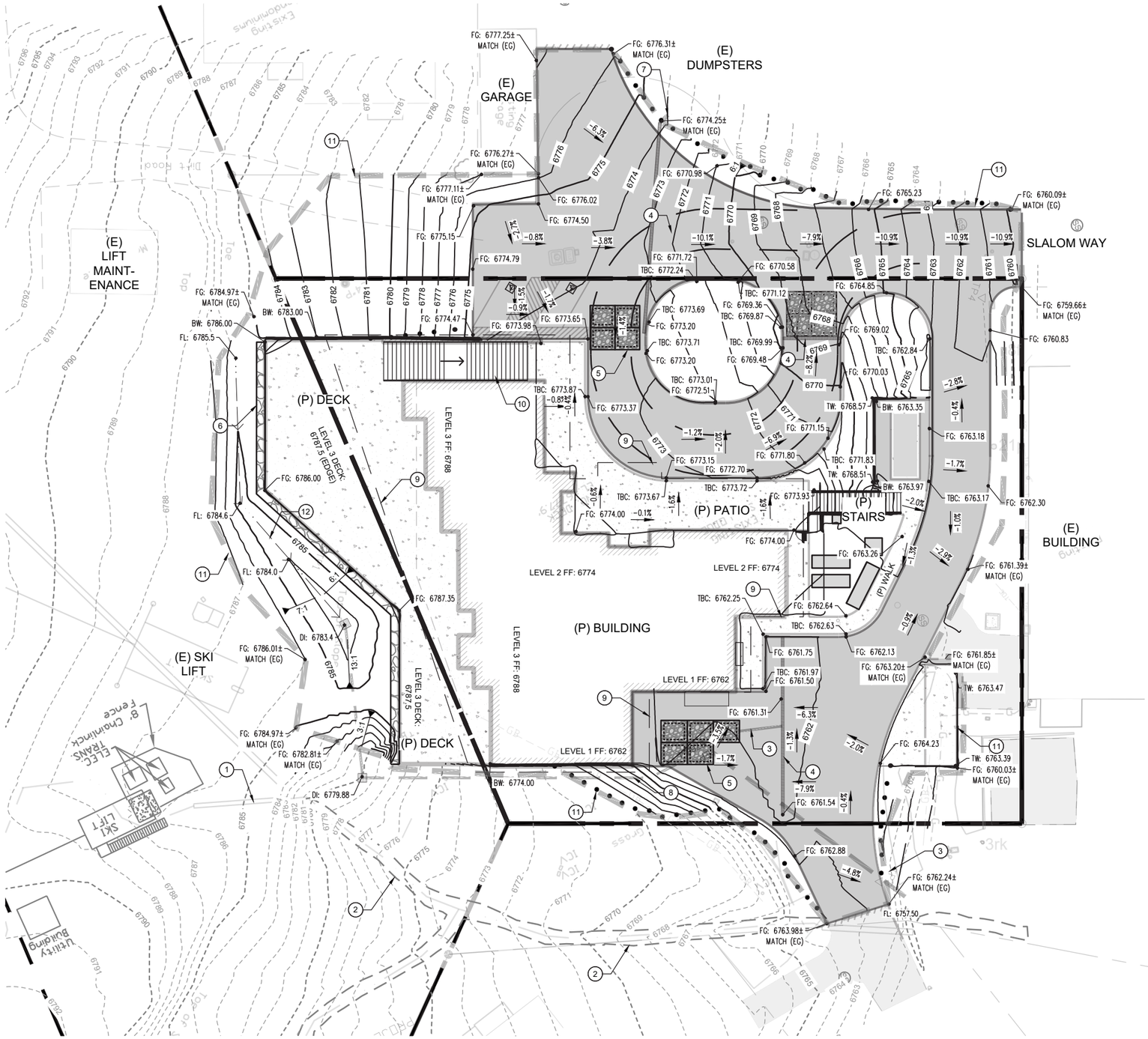

GRADING QUANTITIES

OVERALL CUT/FILL QUANTITIES:*
CUT= ± 795 CY
FILL= ± 1444 CY
NET= ± 649 CY OF FILL

*QUANTITIES ARE APPROXIMATE AND SHALL NOT BE USED FOR ESTIMATING OR BIDDING PURPOSES.

GRADING AND DRAINAGE KEYNOTES

1. (E) CULVERT TO REMAIN, PROTECT IN PLACE
2. (E) OFF-SITE AQUATIC RESOURCE - WETLAND SWALE TO BE PROTECTED AND AVOIDED, AND LIMITS OF 100 YEAR FLOOD PLAIN DELINEATION (SEE DRAINAGE REPORT)
3. (P) STORM DRAIN PIPING, TYP
4. (P) TRENCH DRAIN
5. (P) INFILTRATION CHAMBER, FOR SIZING INFO REFER TO DRAINAGE REPORT
6. (P) INFILTRATION TRENCH
7. DAYLIGHT TO LANDSCAPE AREA
8. DAYLIGHT UNDERSLAB DRAINAGE TO PROPOSED DRAINAGE (TO BE DETERMINED)
9. ROOF LINE, TYPICAL
10. (P) STAIRWAY LEVEL 2 TO LEVEL 3
11. LIMIT OF DISTURBANCE (APPROX. ~ 1.3 ACRES)
12. (P) VEGETATIVE DRAINAGE SWALE

GRAPHIC SCALE
40 0 20 40
1 INCH = 40 FEET

C5 GRADING AND DRAINAGE PLAN (UPDATED)

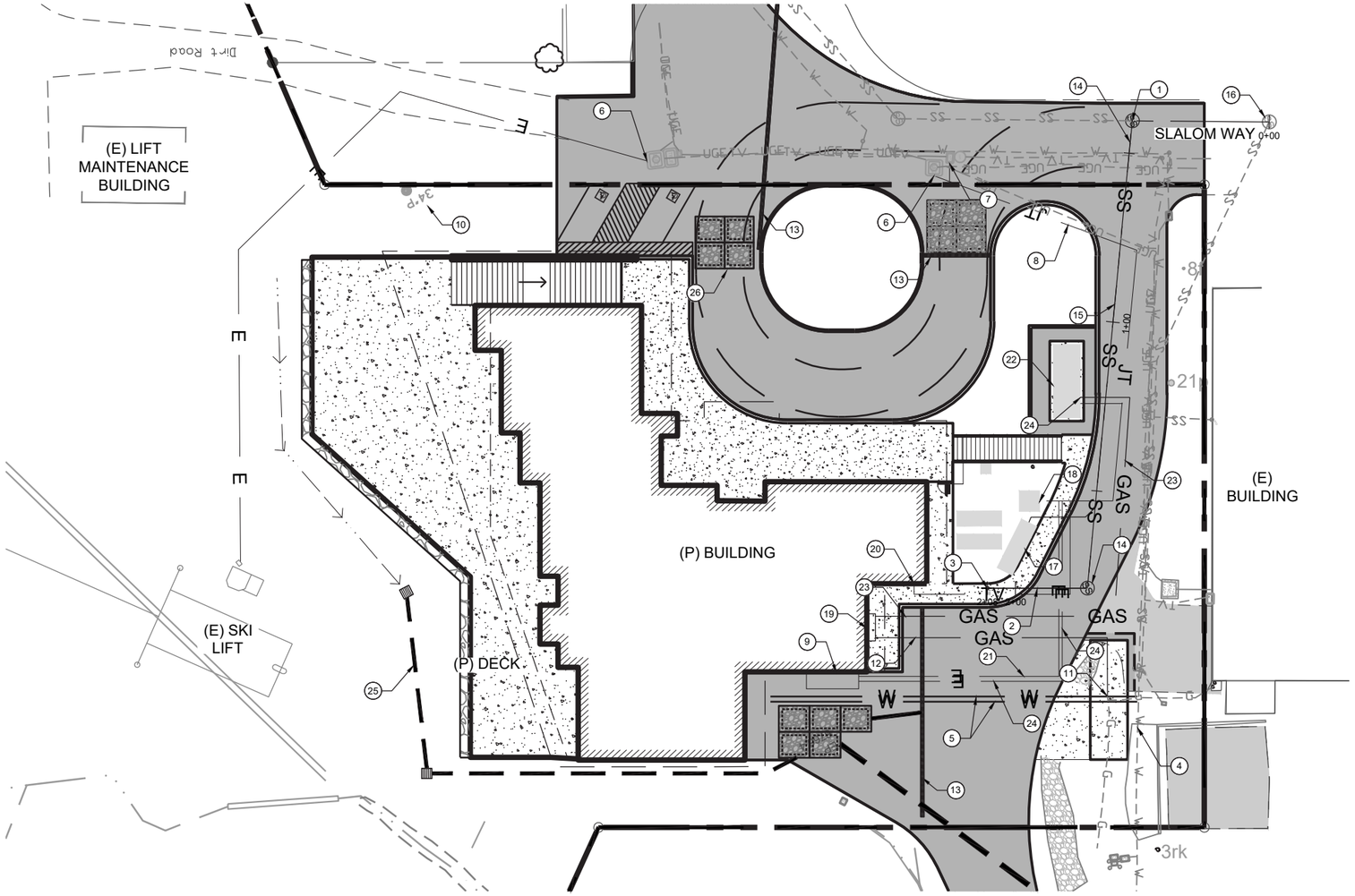

UTILITY KEYNOTES

1. CONNECT TO (E) SEWER WITH MANHOLE OVER (E) SEWER
2. (P) SEWER SERVICE TO BUILDING
3. (P) SEWER CLEANOUT
4. CONNECT TO (E) WATER
5. (P) DOMESTIC WATER AND FIRE SERVICE TO BUILDING
6. CONNECT TO (E) ELECTRIC
7. CONNECT TO (E) COMMUNICATIONS
8. (P) JOINT TRENCH ELECTRIC AND COMMUNICATIONS
9. (P) ELECTRIC PANELS
10. (P) ELECTRIC SERVICE TO SKI LIFT AVOID DRIPLINE OF 34" PINE TREE
11. CONNECT TO (E) GAS
12. (P) GAS SERVICE TO BUILDING
13. (P) TRENCH DRAIN
14. (P) SEWER MANHOLE
15. (P) SEWER LATERAL
16. (E) SEWER MANHOLE APPROXIMATE IE = 6752.16
17. (P) 2000 GAL SEWER INTERCEPTOR
18. (P) ELECTRIC TRANSFORMER
19. (P) GAS METERS WITH SHED
20. (P) CATV SERVICE TO BUILDING
21. (P) ELECTRIC SERVICE TO BUILDING
22. (P) GENERATOR
23. (P) GAS SERVICE TO GENERATOR
24. (P) ELECTRIC SERVICE FROM GENERATOR TO BUILDING
25. (P) STORM DRAINAGE, TYP, SEE GRADING AND DRAINAGE PLAN
26. INFILTRATION CHAMBERS, TYP, SEE GRADING & DRAINAGE PLAN

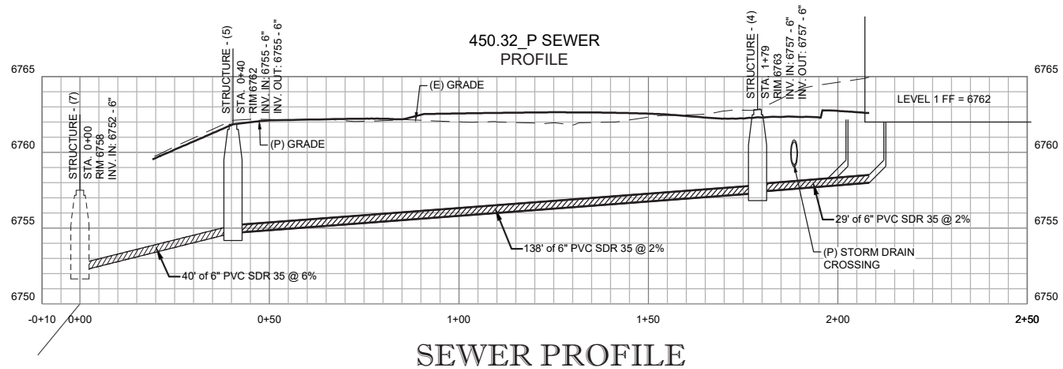

SEWER PROFILE

SCALE (H): 1" = 40'
SCALE (V): 1" = 10'

GRAPHIC SCALE

40 0 20 40

1 INCH = 40 FEET

C6 UTILITY PLAN (UPDATED)

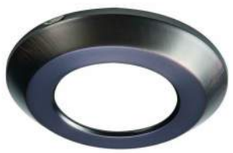

L1- EXTERIOR DOWNLIGHT

Type: Exterior Downlight Fixture
Manufacturer: EATON
Product: Halo - SLD 4” Surface LED Downlight
Material: Die cast aluminum trim ring and die formed aluminum frame
Electrical: 12.2 W LED luminaire
Finish: SLD designer trims are accessory rings that attach to SLD for a permanent finish. Color: Tuscan Bronze
Location: Refer to building floor plans
Lumens: 800 lumens per fixture X 23 fixtures = 18,400 lumens

L2- EXTERIOR SIGN LIGHT

Type: Sign Light
Manufacturer: EATON
Product: Cambria 920
Material: Housing, hood, hook arm and wall mounting plate are precision-machined from corrosion resistant 6061-T6 aluminum
Electrical: Dimmable LED (50 W max) or MR 16 low voltage sign lighting luminaire
Finish: Fixtures are double protected by a chromate conversion undercoating and polyester powdercoat paint finish. Color: Bronze
Location: Refer to building floor plan - Level 3
Lumens: 600 lumens per fixture X 3 fixtures = 1,800 lumens

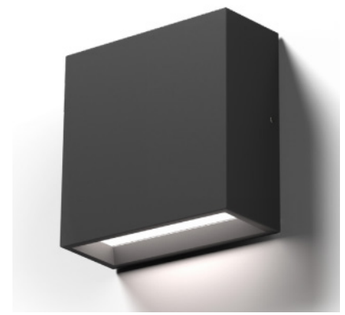

L3- EXTERIOR WALL LIGHT

Type: Direct Wall Fixture
Manufacturer: Targetti
Product: Mr. Smith wall mounted luminaire 5”H x 5”W x 2”D
Material: Powder coated anodized die-cast aluminum body and optical unit with injection molded opal polycarbonate lens
Electrical: High efficiency LED chip on board monoemision 7W/ Biemission 13W
Finish: Powder coated texture finish. Color: Bronze
Location: Refer to building floor plans
Lumens: 1261 lumens per fixture X 23 fixtures = 29,003 lumens

Note: There is no lighting at the existing parking lots.

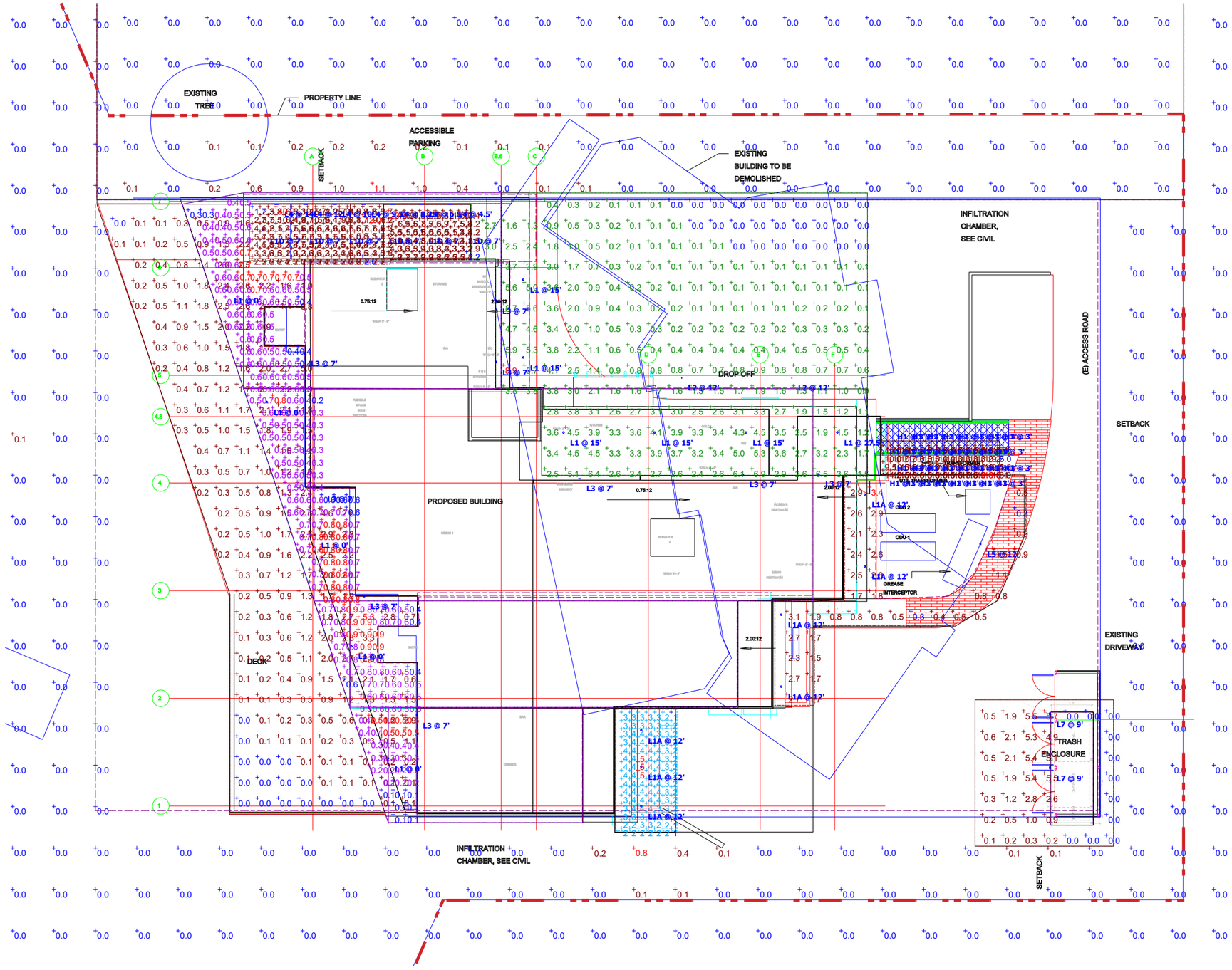

Statistics

Description	Symbol	Avg	Max	Min	Max/Min	Avg/Min
EXT- Roof Underside-0'0"	+	0.7 fc	0.9 fc	0.4 fc	2.3:1	1.8:1
EXT- Roof Underside-0'0"	+	0.5 fc	0.8 fc	0.2 fc	4.0:1	2.5:1
EXT- Roof Underside-0'0"	+	0.7 fc	0.8 fc	0.6 fc	1.3:1	1.2:1
EXT- Roof Underside-0'0"	+	0.8 fc	0.9 fc	0.6 fc	1.5:1	1.3:1
EXT- Roof Underside-0'0"	+	0.3 fc	0.5 fc	0.1 fc	5.0:1	3.0:1
EXT- Roof Underside-0'0"	+	0.3 fc	0.5 fc	0.1 fc	5.0:1	3.0:1
EXT- Roof Underside-0'0"	+	0.6 fc	0.7 fc	0.4 fc	1.8:1	1.5:1
EXT-Deck Eating Area-0'0"	+	1.1 fc	5.3 fc	0.0 fc	N/A	N/A
EXT-Landing Zone-0'0"	+	1.6 fc	8.9 fc	0.0 fc	N/A	N/A
EXT-Loading Area-0'0"	+	3 fc	5 fc	1 fc	5.0:1	3.0:1
EXT-Lower Stair-0'0"	+	12.5 fc	16.0 fc	5.0 fc	3.2:1	2.5:1
EXT-Main Stair High-0'0"	+	5.7 fc	40.9 fc	1.7 fc	24.1:1	3.4:1
EXT-Main Stair Low-0'0"	+	5.6 fc	20.3 fc	2.2 fc	9.2:1	2.5:1
EXT-Main Stair Mid-0'0"	+	5.4 fc	12.0 fc	2.6 fc	4.6:1	2.1:1
EXT-Pathway-0'0"	+	1.7 fc	3.4 fc	0.3 fc	11.3:1	5.7:1
EXT-Site Property Line-0'0"	+	0.0 fc	0.8 fc	0.0 fc	N/A	N/A
EXT-Slope-0'0"	+	0.0 fc	1.1 fc	0.0 fc	N/A	N/A
EXT-Trash Enclosure Area-0'0"	+	1.6 fc	5.7 fc	0.0 fc	N/A	N/A
EXT- Roof Underside-0'0"	+	0.5 fc	0.7 fc	0.3 fc	2.3:1	1.7:1

Schedule

Symbol	Label	Quantity	Manufacturer	Catalog Number	Description	Lamp	Lumens Per Lamp	Light Loss Factor	Wattage
	H1	32	Teslyte, LLC	HR-TD01-24-AS-1WS-30-(Finish)-RD		LED	144	0.85	2.051
	L1	11	USA Illumination, Inc	B4RD-33C3-30KS-90-S-BL-BL-FT-UNV-(Driver)-(Accessories)		LED	1868	0.85	33.87
	L1A	7	USA Illumination, Inc	B4RD-12C3-30KS-90-S-BL-BL-FT-UNV-(Driver)-(Accessories)		LED	803	0.85	12
	L1D	6	USA Illumination, Inc	B4RD-09C3-30KS-25-S-BL-BL-FT-UNV-(Driver)-(Accessories)		LED	782	0.85	8.421
	L2	2	Vision 3	SL2A (Finish) RM (Cap) (Style) (Stem) (Mount) 138 0 0 (Louver)		LED	1280	0.85	15.9
	L3	9	TARGETTI	MRSW41(Finish)MDL130 (Options)		LED	954	0.85	7
	L4	7	TARGETTI	ZEL 41 FW (Finish) L2 30 + 1E3447		LED	1250	0.85	9
	L5	1	Luminis Canada Inc.	LQ421-L1L10-R5-(Voltage)-(Finish)-(Options) + LQP493		LED	1042	0.85	14.1
	L7	2	Lithonia Lighting	WDGE1 LED P1 30K 80CRI VW MVOLT (Mounting) (Options)		LED	1163	0.85	10.0002

SITE PHOTOMETRIC STUDY

S1- ENTRANCE SIGN

Type: Existing Entrance Sign to remain

Location: Ski area entrance sign at Slalom and Snowpeak way

S3- VISITOR PARKING SIGNAGE

Type: Existing ski lodge visitor parking signage to remain

Location: At parking lots

S2- WAY FINDING SIGNAGE

Type: Existing ski lift wayfinding signage to remain

Location: Slalom way pedestrian path

S4- BUILDING SIGNAGE

Type: Proposed building signage

Location: On building facing Slalom way

Material: 18" high metal cast lettering & logo, attached with hidden threaded studs

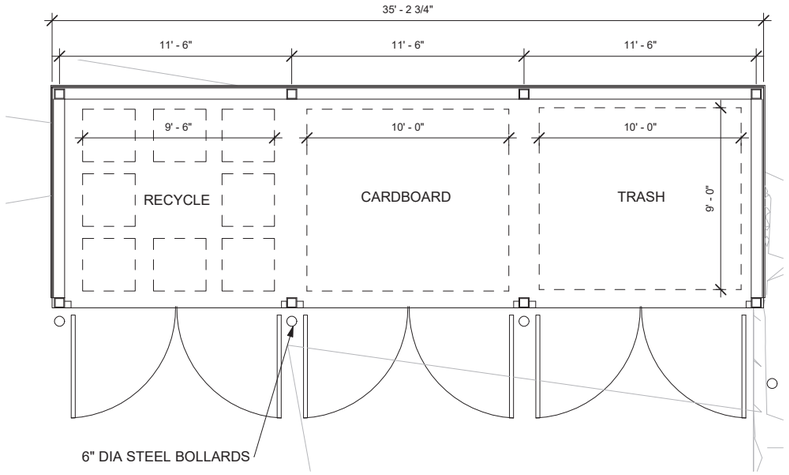

PLAN

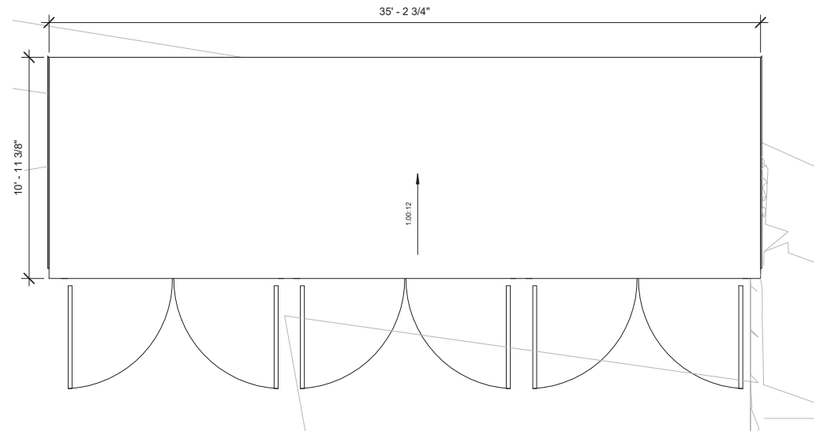

ROOF PLAN

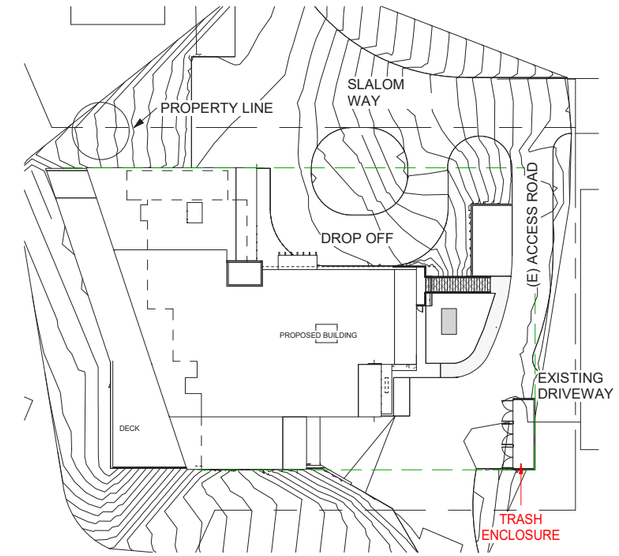

SITE PLAN

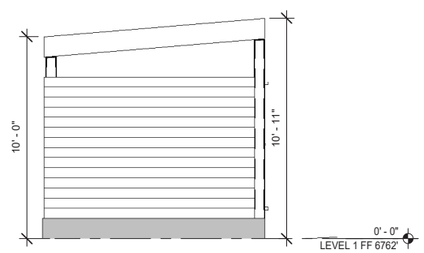

WEST ELEVATION

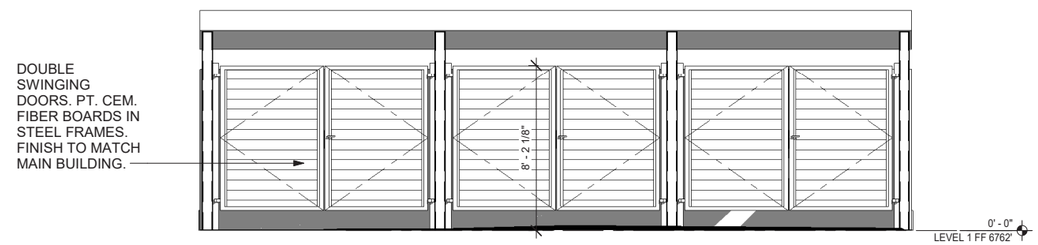

SOUTH ELEVATION

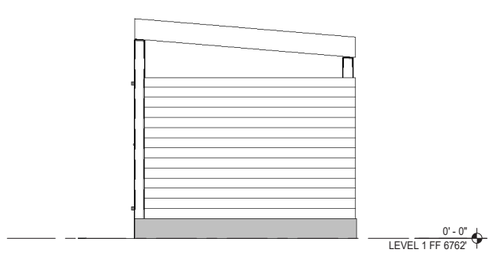

EAST ELEVATION

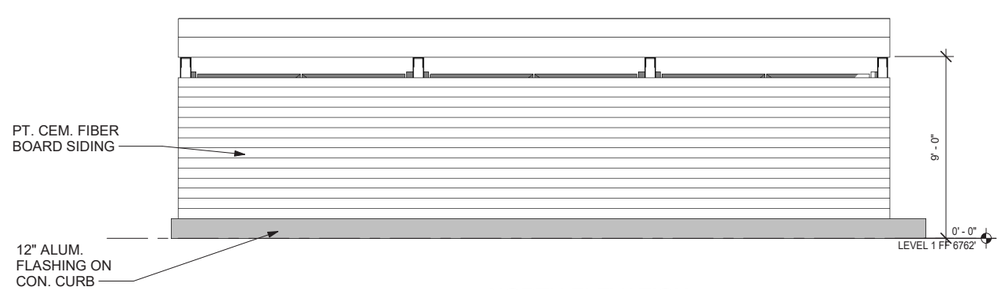

NORTH ELEVATION

3D RENDER

TRASH ENCLOSURE PLANS & ELEVATIONS

SHADOW DIAGRAM - NOON ON DECEMBER 21ST

SOLAR SHADOW ACCESS PLAN

Yumie Dahn

From: Jon Mitchell <jmitchell@tahoedonner.com>
Sent: Friday, August 12, 2022 2:17 PM
To: Yumie Dahn; Jiane Du
Subject: RE: Tahoe Donner Downhill Ski Lodge Complete Letter
Attachments: Tahoe Donner Ski Lodge - Logistics Plans 081022 (002).pdf

Hi Yumie,
The temporary operations facility will likely house the following:

- A point of sales mainly for printing tickets, all orders will be online.
- Ski rentals
- Ski patrol
- Employee rest area

The structure will be either portables or a sprung structure. We are still looking at the advantages, disadvantages, and cost of those options.

Restrooms will be provided at lot five in either a separate bathroom trailer or porta potties. As shown on the "winter site usage plan", restrooms will also be available as either a bathroom trailer or porta potties on the mountain just down from the lifts.

At this time all operations including rentals are planned to be run out of the temporary operations facility. Although we have discussed it we are not proposing any off-site operations at this time.

As shown on the "winter site usage plan" the only proposed staging area during winter operations is the lower portion of lot 5. The rest of the parking lots will be for guests. In the "summer site usage plan" we are proposing to use all of the lots for staging areas but we will not be running any operations and will not need guest parking in the spring, summer, and fall when the ski resort is not open.

I hope I've answered all of your questions. Feel free to reach out to discuss any of this.

Regards,

Jon

LEGEND

- VISITORS SHUTTLE ROUTE
- CONSTRUCTION ROUTE
- PEDESTRIAN ROUTE
- TEMP FENCE
- TEMP BMPs
- 25'X30' VISITORS DROP-OFF
- FLAGGER

WINTER - SITE USAGE PLAN

Temporary Operations Plan

Plans Prepared by:

SierraCon Inc.
1121 Ski Run Blvd, Suite B
South Lake Tahoe, CA 96158

REVISION	DATE

TAHOE DONNER DOWNHILL LODGE

11603 SNOWPEAK WAY
TRUCKEE, CA 96161

Date:	07/05/2022
Design:	
Drawn:	AMC
Checked:	

LP-01

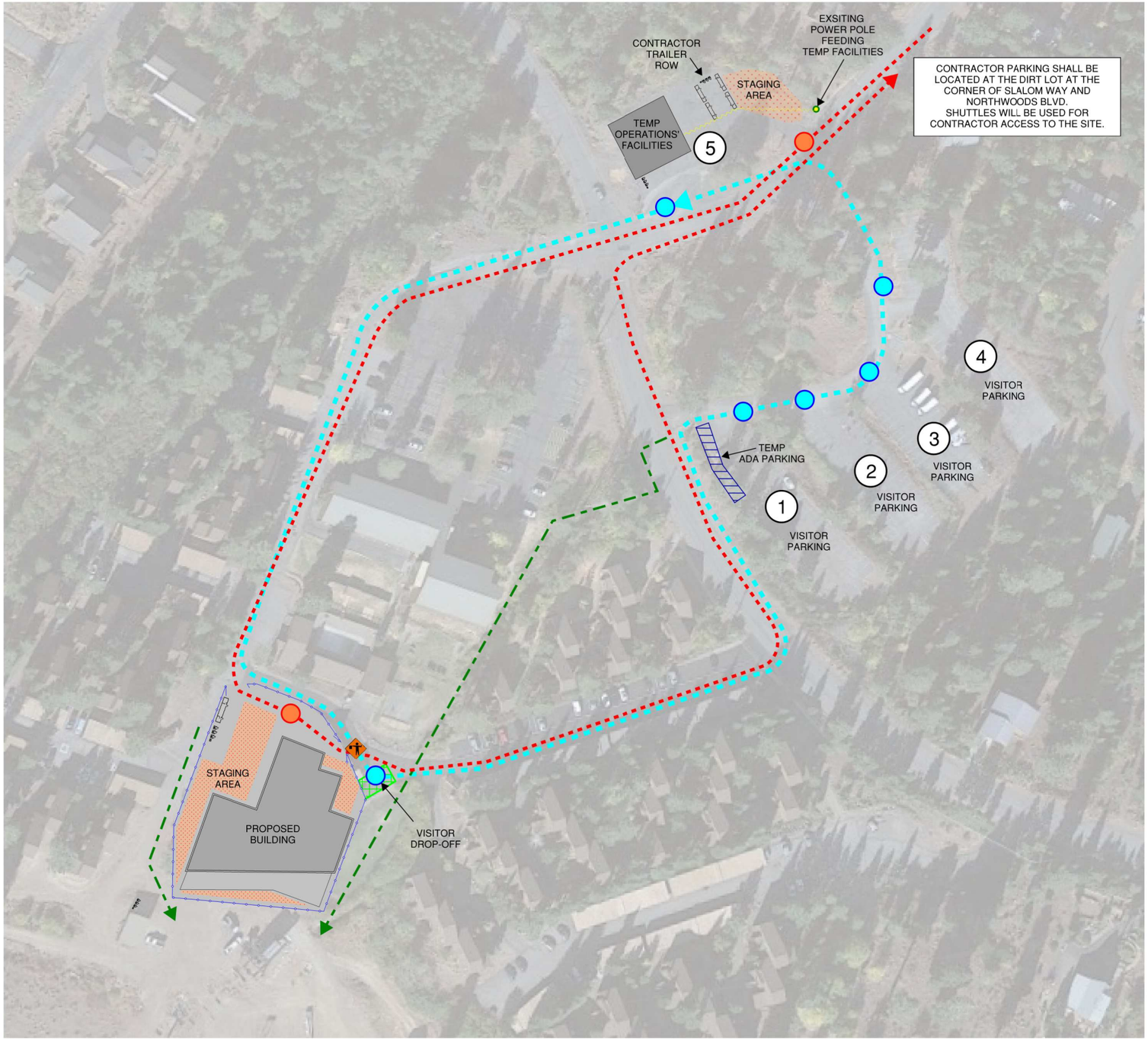

LEGEND

- VISITORS SHUTTLE ROUTE
- CONSTRUCTION ROUTE
- PEDESTRIAN ROUTE
- TEMP FENCE
- CONSTRUCTION DELIVERIES DROP-OFF
- VISITOR SHUTTLE PICK-UP / DROP-OFF
- # PARKING LOT
- FLAGGER

WINTER - SITE HAUL ROUTES

Temporary Operations Plan

Plans Prepared by:
SierraCon Inc.
1121 Ski Run Blvd, Suite B
South Lake Tahoe, CA 96158

DATE	REVISION

TAHOE DONNER DOWNHILL LODGE

11603 SNOWPEAK WAY
TRUCKEE, CA 96161

Date:	07/05/2022
Design:	
Drawn:	AMC
Checked:	

LP-02

LEGEND

- CONSTRUCTION ROUTE
- PEDESTRIAN ROUTE
- TEMP FENCE
- TEMP BMPs
- KEEP ROAD CLEAR FOR CONDO RESIDENTS

SUMMER - SITE USAGE PLAN

Temporary Operations Plan

Plans Prepared by:
SierraCon Inc.
11121 Ski Run Blvd, Suite B
South Lake Tahoe, CA 96158

DATE	REVISION

TAHOE DONNER
DOWNHILL LODGE

11603 SNOWPEAK WAY
TRUCKEE, CA 96161

Date:	07/05/2022
Design:	
Drawn:	AMC
Checked:	

LP-03

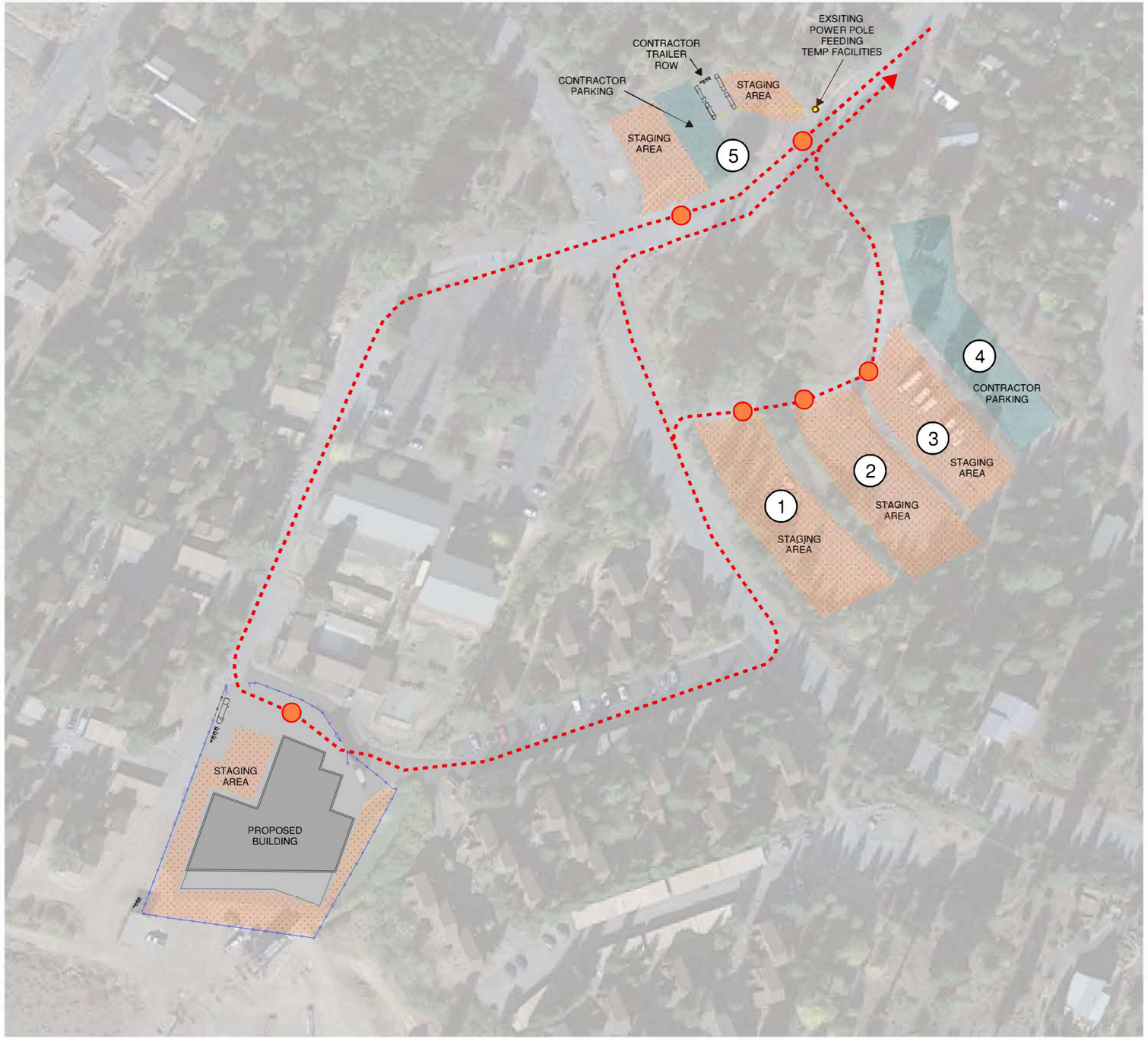

LEGEND

- VISITORS SHUTTLE ROUTE
- CONSTRUCTION ROUTE
- PEDESTRIAN ROUTE
- TEMP FENCE
- CONSTRUCTION DELIVERIES DROP-OFF
- # PARKING LOT

SUMMER - SITE HAUL ROUTES

Temporary Operations Plan

Plans Prepared by:

SierraCon Inc.
1121 Ski Run Blvd, Suite B
South Lake Tahoe, CA 96158

REVISION	DATE

TAHOE DONNER
DOWNHILL LODGE

11603 SNOWPEAK WAY
TRUCKEE, CA 96161

Date:	07/05/2022
Design:	
Drawn:	AMC
Checked:	

LP-04

Handrail Luminaire

Project:

Location:

Catalog #: Quantity:

Features

Teslyte HR-TD Series is inconspicuous recessed handrail light that serve as an exceptional lighting source for stairways. The HR-TD is ideals to illuminate stairways and walkways of residential and commercial buildings like hospitals, movie theaters, public parks, and apartment complexes.

- Housing: Aluminum or stainless-steel options
- Lens: Symmetrical or Asymmetrical options
- LEDs:
  - Highly efficient integral LED and driver.
- Applications:
  - Suitable for walkway and stairways for Residential or Commercial.
- Ratings:
  - Suitable for wet locations
  - IP67
- Warranty: 5-year warranty.

Ordering Information

Product code		Voltage		Distribution		Wattage		CCT (K)		Housing		Optional
HR-TD01	-		-		-		-		-		-	
		12- 12V_{DC} **24**- 24V_{DC}		**AS** - Asymmetrical 30°x60°(Tilt x Pan)		**1W5**– 1.5W (70 lm/W)		**30**- 3000K		**SL**– Aluminum Silver finish **SS**– Stainless steel (consult factory)		**RD**- Remoted Driver

Note: Fixtures must be grounded in accordance with national, state, and/or local electrical codes. Failure to do so may result in serious personal injury

Mechanical Dimensions

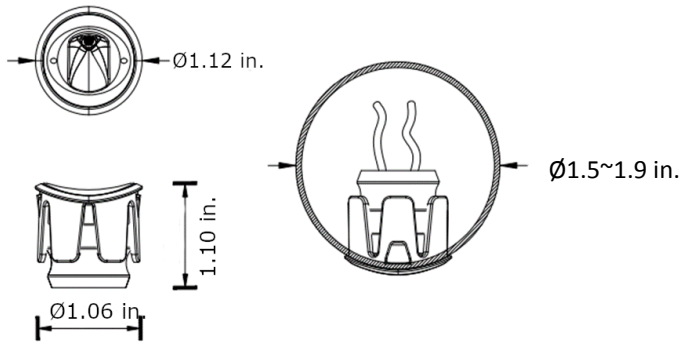

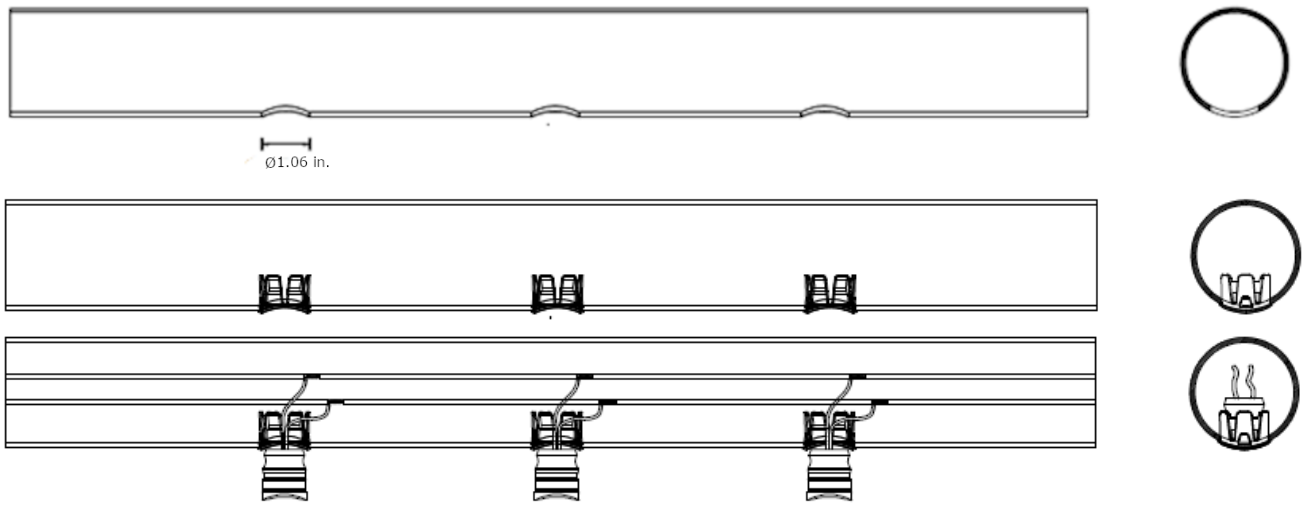

Photometric Data

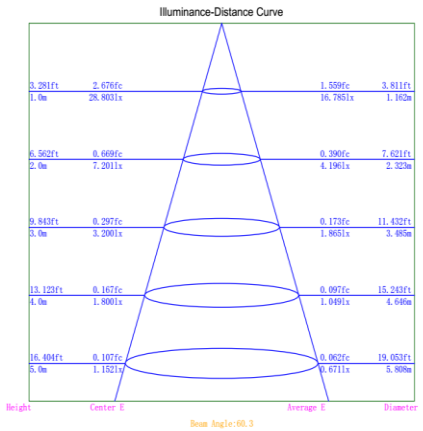

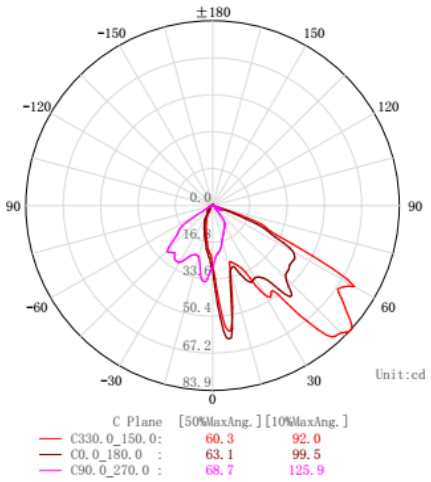

Remoted Power Supply Options

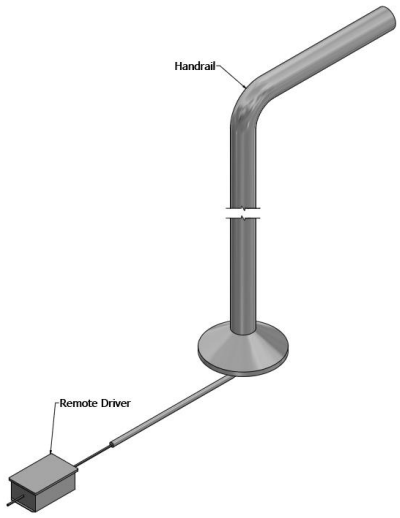

- Meet UL, CUL, ANSI/UL, CSA requirements and class 2 output
- 12V or 24V DC rated output
- 1/8” steel, powder coated NEMA 3R CASE

12VDC Magnetic Dimmable LED Power Supplies

WATTAGE	**20 WATT**	**40 WATT**	**60 WATT**	**96 WATT**
12V DC Output P/N	**SEB12DC-20W-3R**	**SEB12DC-40W-3R**	**SEB12DC-60W-3R**	**SEB12DC-96W-3R**
# OF FIXTURES PER CIRCUIT	**12** x 1.5W fixtures (2’ fixtures spacing)	**22** x 1.5W fixtures (2’ fixtures spacing)	**33** x 1.5W fixtures (2’ fixtures spacing)	**52** x 1.5W fixtures (dual O/P) (2’ fixtures spacing)
INPUT VOLTAGE	120V or 277VAC	120V or 277VAC	120V or 277VAC	120V or 277VAC
OUTPUT VOLTAGE	12VDC-2A	12VDC-3.3A	12VDC-5A	12VDC-8A (dual output)
DRIVER DIMENSIONS	8.5” x 3.5” x 3”	8.5” x 3.5” x 3”	8.5” x 3.5” x 3”	8.5” x 3.5” x 3”

24VDC Magnetic Dimmable LED Power Supplies

WATTAGE	**20 WATT**	**40 WATT**	**60 WATT**	**96 WATT**
24V DC Output P/N	**SEB24DC-20W-3R**	**SEB24DC-40W-3R**	**SEB24DC-60W-3R**	**SEB24DC-96W-3R**
# OF FIXTURES PER CIRCUIT	**6**x 1.5W fixtures (2’ fixtures spacing)	**12** x 1.5W fixtures (2’ fixtures spacing)	**16**x 1.5W fixtures (2’ fixtures spacing)	**26** x 1.5W fixtures (2’ fixtures spacing)
INPUT VOLTAGE	120V or 277VAC	120V or 277VAC	120V or 277VAC	120V or 277VAC
OUTPUT VOLTAGE	24VDC-1A	24VDC-2A	24VDC-2.5A	24VDC-4A
DRIVER DIMENSIONS	8.5” x 3.5” x 3”	8.5” x 3.5” x 3”	8.5” x 3.5” x 3”	8.5” x 3.5” x 3”

BeveLED® 2.2 Complete
4.5″ Round Downlight - B4RD

L1

USAI® Lighting

Universal and Field Convertible - Trim | Trimless | Millwork

Trimmed - B4RDF

usailighting.com/beveled

Trimless - B4RDL

Millwork - B4RDM

Trimless Acoustical Tile - B4RDP

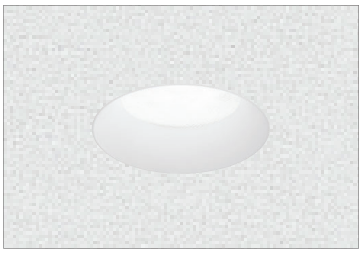

To specify Trimless Acoustical Lighting visit usailighting.com/B4RDP

FEATURES

- Field Flexibility between trimmed, trimless and millwork
- Dry/damp/wet location rated for bathrooms and showers, including trimless and millwork
- 1% dimming standard + more dimming options
- Clear overspray protector for installation convenience
- Full family platform
- Iconic beveled look

COMPANION FAMILY PRODUCTS

Deep Regress - B4RC
usailighting.com/B4RC

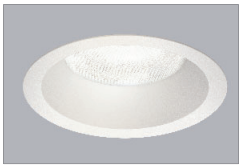

Adjustable - B4RA
usailighting.com/B4RA

Wall Wash - B4RW
usailighting.com/B4RW

DOWNLIGHT PERFORMANCE DATA

	LED COLOR CHOICES									
	Classic White						Warm Glow Dimming		Color Select	
DELIVERED* PERFORMANCE:	**9W**	**12W**	**16W**	**24W**	**33W**	**36W**	**16W**	**32W**	**16W**	**32W**
Source Lumens:	1150	1300	1725	2400	3025	4150	1275	2150	1250	2075
Lumens Per Watt:	93	86	86	80	71	99	69	61	60	53
Delivered Lumens:	775	1025	1375	1925	2400	3450	1100	1800	950	1600
EM Mode Output:	575 Delivered Lumens (nominal)						450 Delivered Lumens		475 Delivered Lumens	

*Based on 3000K, 80+ CRI. Performance varies for each specific beamspread and color temperature. See IES files for exact values at usailighting.com.

CORRELATED COLOR TEMPERATURE MULTIPLIER	Classic White								Warm Glow Dimming				Color Select					
	2700K		**3000K**		**3500K**		**4000K**		**2700K**		**3000K**		**2200K**	**2700K**	**3500K**	**4000K**	**5000K**	**6000K**
Color Rendering Index:	80+	90+	80+	90+	80+	90+	80+	90+	80+	90+	80+	90+	80+	80+	80+	80+	80+	80+
Multiplier for Lumen Output:	0.94	0.78	1.00	0.78	1.00	1.00	1.06	1.06	0.94	0.74	1.00	0.80	0.87	0.96	1.04	1.09	1.13	1.18

THE COMPLETE BEVELED FAMILY PLATFORM

More Ceiling Applications

Sloped Ceiling

BeveLED Block

Cylinders

More Sizes and Shapes

BeveLED Micro

BeveLED Mini

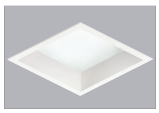

BeveLED 5.0

Armstrong® Ceiling Solutions Compatible

Trimless Acoustical

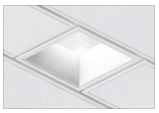

Connect TechZone

BeveLED Connect

USAI LIGHTING COLLABORATORY
13 Crosby Street
New York, NY 10013
845-234-4090
showroom@usailighting.com

USAI LIGHTING HEADQUARTERS
1126 River Road
New Windsor, NY 12553
T: 845–565–8500
info@usailighting.com

© 2018. USAI, LLC. All rights reserved.
All designs protected by copyright. Covered by US Patents: 8,581,520, 8,456,109, 8,742,695, 9,671,091 and 7,832,889. Patents pending. USAI, BeveLED, Classic White, Warm Glow and Color Select are registered trademarks of USAI, LLC.
Revised 06/02/2022

BeveLED® 2.2 Complete
4.5″ Round Downlight - B4RD with Integral Driver

USAI® Lighting

Specify fixture part number. (All boxes must be filled in to correctly order)

B4RD_

BeveLED Trim Style

F
Trimmed with Flange (use with all materials)

L
Trimless Spackle-in (use with sheetrock and plaster only)

M
Millwork Knife-Edge (use with wood and stone)

Wattage Options / LED Color Options / Beam Options

Classic White Light

Wattage Options	LED Color Options	Beam Options
09C3 9W LED	**27KS** 2700K, 80+ CRI	**25** 25° beam
12C3 12W LED	**27KH** 2700K, 90+ CRI	**50** 50° beam
16C3 16W LED	**30KS** 3000K, 80+ CRI	**90** 90° beam
24C3 24W LED	**30KH** 3000K, 90+ CRI	
33C3 33W LED	**35KS** 3500K, 80+ CRI	
36E1 36W LED	**35KH** 3500K, 90+ CRI	
	40KS 4000K, 80+ CRI	
	40KH 4000K, 90+ CRI	

Warm Glow Dimming

Wattage Options	LED Color Options	Beam Options
16WG2 16W LED	**2722KS** 2700K-2200K, 80+ CRI	**30** 30° beam
32WG2 32W LED	**2722KH** 2700K-2200K, 90+ CRI	**50** 50° beam
	3022KS 3000K-2200K, 80+ CRI	**90** 90° beam
	3022KH 3000K-2200K, 90+ CRI	

Color Select Tunable White

Wattage Options	LED Color Options	Beam Options
16CS1 16W LED	**6022KS** 6000K-2200K, Tunable White Light 80+ CRI	**40** 40° beam
32CS1 32W LED		**60** 60° beam
		90 90° beam

Note: Color Select option requires additional 0-10V dimming wires; see wiring diagrams for details

Lens Options

S
Solite (provided standard)

SF
Solite Frosted

BF
Borosilicate Frosted

Bevel Trim Finish Options / *Flange/ Millwork Collar Finish

Bevel Trim Finish Options	*Flange/ Millwork Collar Finish
WH White	**WH** White
SC Conduit Silver	**SC** Conduit Silver
GR Grey	**GR** Grey
BL Black	**BL** Black
BZ Bronze	**BZ** Bronze
PR Primer Finish	**PR** Primer Finish
QW Antimicrobial Paint, White	**QW** Antimicrobial Paint, White
AC Clear Matte Anodized	**AC** Clear Matte Anodized **WH** White **BL** Black **GR** Grey **BZ** Bronze
AB Piano Gloss Black	**AB** Piano Gloss Black **WH** White **GR** Grey **BL** Black **BZ** Bronze
RAL Custom Color Specify RAL #	**RAL** Custom Color Specify RAL #

*Leave blank for Trimless

Natatorium Corrosion Protection (optional)

NT
Natatorium triple-coat Corrosion resistant (available with "F" flanged trims and painted finishes only)

* Leave blank for non Natatorium trims

Housing Options

FT
Flat Housing New Construction (3, 9)

FTIC
Flat Housing IC-Rated (up to 16W maximum) (3, 9)

FTCP
Flat Housing Chicago Plenum (3, 9)

NCSM
New Construction Narrow Width

NC
New Construction

NCCP
Chicago Plenum (9)

NCIC
Insulation Contact Rated / Airtight (1, 9)

Voltage Options
Select one

UNV
120V-277V

120V

347V

Dimming Driver Options

For use with Universal Voltage 120V - 277V

No Additional Charge

D6E
EldoLED 0-10V, 1% (provided standard)

D6F
EldoLED 0-10V, 1%

D4H
Lutron H ECO, 1% Fade (2, 3, 4)

D4
Lutron 3-Wire/Eco, 1% (10)

D6A
EldoLED 0-10V, 0.1%

D6B
EldoLED 0-10V, 0.1%

D7
EldoLED DALI, 0.1%

D28
EldoLED DMX, 0.1% (7)

For use with 120V only

No Additional Charge

D19
Phase 2-wire, 1% (1, 2, 3, 4, 5)

D3
Lutron 2-wire, 1%

For use with 347V only

D15
0-10V dim, 1% 347V only (2, 3)

Accessories (Optional)*

CB27
27" C-Channel Bars

CB32
32" C-Channel Bars

CB52
52" C-Channel Bars

EM
Emergency Battery with NC housing and Integral test switch dry/damp/wet-rated, or with NCSM housing and Remote dry/damp only test switch (8)

EMW
Emergency Battery with NCSM housing and Remote dry/damp/wet-rated test switch (8)

* Residential grade nailer bars provided standard

Notes:
1 Not available with 36E1LED
2 Not available for Warm Glow
3 Not available for Color Select
4 Not available with 9W
5 Not available with 33W
6 For use with 16W and lower only
7 Not available with FT, FTIC or FTCP housing
8 Not available with 347V. NCSM housing requires above ceiling access
9 EM and EMW options not available.
10 Not available with Classic White. Warm Glow and Color Select only.

TRIM FINISH OPTIONS

White

Grey

Black

Bronze

Clear Matte Anodized

Piano Gloss Black

Clear Matte Anodized with White Flange

Custom RAL (example)

Custom colors and primer finish also available

USAI LIGHTING COLLABORATORY
13 Crosby Street
New York, NY 10013
845-234-4090
showroom@usailighting.com

USAI LIGHTING HEADQUARTERS
1126 River Road
New Windsor, NY 12553
T: 845–565–8500
info@usailighting.com

© 2018. USAI, LLC. All rights reserved.
All designs protected by copyright. Covered by US Patents: 8,581,520, 8,456,109, 8,742,695, 9,671,091 and 7,832,889. Patents pending. USAI, BeveLED, Classic White, Warm Glow and Color Select are registered trademarks of USAI, LLC.
Revised 06/02/2022

TRIM FINISH OPTIONS

BeveLED® 2.2 Complete
4.5″ Round Downlight - B4RD with Remote Driver

USAI® Lighting

1. Specify fixture part number. (All boxes must be filled in to correctly order)

B4RD_										RM	
BeveLED Trim Style	**Wattage Options**	**LED Color Options**	**Beam Options**	**Lens Options**	**Bevel Trim Finish Options**	***Flange/ Millwork Collar Finish**	**Natatorium Corrosion Protection (optional)**	**Housing Options**	**Remote Dimming Driver**	**Accessories (Optional)**
F Trimmed with Flange (use with all materials) **L** Trimless Spackle-in (use with sheetrock and plaster only) **M** Millwork Knife-Edge (use with wood and stone)	**Classic White Light** **09C3** 9W LED **12C3** 12W LED **16C3** 16W LED **24C3** 24W LED **33C3** 33W LED **36E1** 36W LED	**27KS** 2700K, 80+ CRI **27KH** 2700K, 90+ CRI **30KS** 3000K, 80+ CRI **30KH** 3000K, 90+ CRI **35KS** 3500K, 80+ CRI **35KH** 3500K, 90+ CRI **40KS** 4000K, 80+ CRI **40KH** 4000K, 90+ CRI	**25** 25° beam **50** 50° beam **90** 90° beam	**S** Solite (provided standard) **SF** Solite Frosted **BF** Borosilicate Frosted	**WH** White **SC** Conduit Silver **GR** Grey **BL** Black **BZ** Bronze **PR** Primer Finish **QW** Antimicrobial Paint, White **AC** Clear Matte Anodized **AB** Piano Gloss Black **RAL** Custom Color Specify RAL #	**WH** White **SC** Conduit Silver **GR** Grey **BL** Black **BZ** Bronze **PR** Primer Finish **QW** Antimicrobial Paint, White **AC** Clear Matte Anodized **WH** White **BL** Black **GR** Grey **BZ** Bronze **AB** Piano Gloss Black **WH** White **GR** Grey **BL** Black **BZ** Bronze **RAL** Custom Color Specify RAL # *Leave blank for Trimless	**NT** Natatorium triple-coat Corrosion resistant (available with "F" flanged trims and painted finishes only) * Leave blank for non Natatorium trims	**FT** Flat Housing New Construction **FTIC** Flat Housing IC-Rated (up to 16W maximum) **FTCP** Flat Housing Chicago Plenum **NCSM** New Construction Narrow Width **NC** New Construction **NCCP** Chicago Plenum **NCIC** Insulation Contact Rated / Airtight (1)	**RM** Remote Power Supply (Specify in table below)	**CB27** 27" C-Channel Bars **CB32** 32" C-Channel Bars **CB52** 52" C-Channel Bars * Residential grade nailer bars provided standard
	Warm Glow Dimming **16WG2** 16W LED **32WG2** 32W LED	**2722KS** 2700K-2200K, 80+ CRI **2722KH** 2700K-2200K, 90+ CRI **3022KS** 3000K-2200K, 80+ CRI **3022KH** 3000K-2200K, 90+ CRI	**30** 30° beam **50** 50° beam **90** 90° beam								

Notes:
1 Not available for 36W
2 Not available for 32W or 33W
3 Not available with 24W
4 Not available for 9W
5 Not available for Warm Glow

USAI Power Supply Must Be Specified

2. Specify Remote Power Supply

RPC-01					
Remote Power Supply	**Wattage Options**	**Voltage**	**Remote Dimming Type and Level**	**Remote Emergency Option**	**Remote Driver Mounting Accessories***
RPC-01 BeveLED 2.2 Remote Power Supply	**Classic White** **09C3** 9W LED **12C3** 12W LED **16C3** 16W LED **24C3** 24W LED **33C3** 33W LED **36E1** 36W LED	**UNV** 120V - 277V	**D4H** Lutron H ECO, 1% Fade (4, 5) **D4** Lutron 3-Wire/Eco, 1% (8) **D6A** EldoLED 0-10V, 0.1% **D6B** EldoLED 0-10V, 0.1% **D6E** EldoLED 0-10V, 1% **D6F** EldoLED 0-10V, 1% **D7** EldoLED DALI, 0.1% **D28** EdloLED DMX, 0.1% **D3** Lutron 2-wire, 1%	**EM5** EM battery requires remote enclosure by others, minimum size 11" L x 6.75" W x 3.25" H (6, 7)	**MP** Junction Box Mounting Plate, 5-1/8" x 5-1/8" **ENC** Single Driver enclosure, 4-1/8" x 9-11/16" x 2-3/8" * If Remote Driver Mounting Accessories selection is left blank, driver will be provided with accessories for mounting in enclosure by others. See page 7 for remote driver enclosure sizing requirements.
	Warm Glow **16WG2** 16W LED **32WG2** 32W LED	**120V** 120V Only	**D19** Hatch Phase 2-wire, 1% (1, 2, 4, 5, 6)		

Notes:
1 Not available for 36W
2 Not available for 32W or 33W
3 Not available with 24W
4 Not available for 9W
5 Not available for Warm Glow
6 Not available with MP jbox accessory
7 Not available with ENC single driver enclosure; enclosure by others required
8 Not available for Classic White. Warm Glow only

USAI LIGHTING COLLABORATORY
13 Crosby Street
New York, NY 10013
845-234-4090
showroom@usailighting.com

USAI LIGHTING HEADQUARTERS
1126 River Road
New Windsor, NY 12553
T: 845–565–8500
info@usailighting.com

© 2018. USAI, LLC. All rights reserved.
All designs protected by copyright. Covered by US Patents: 8,581,520, 8,456,109, 8,742,695, 9,671,091 and 7,832,889. Patents pending.
USAI, BeveLED, Classic White, Warm Glow and Color Select are registered trademarks of USAI, LLC.
Revised 06/02/2022

BeveLED® 2.2 Complete
4.5″ Round Downlight - B4RD

USAI® Lighting

Trimmed - B4RDF

TRIM DETAILS

Trimmed - B4RDF

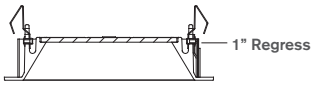

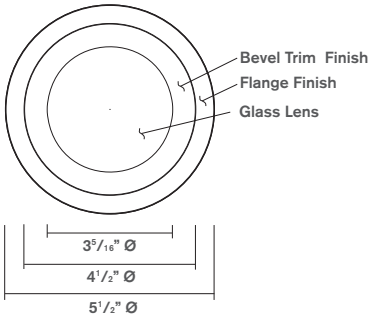

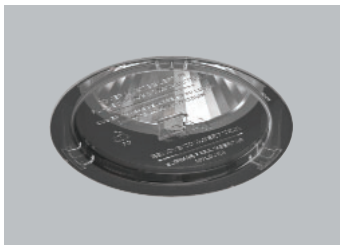

Clear acrylic overspray protector provided standard with every housing to keep out dust and contaminants during construction. Allows for use as work light.

HOUSING OPTIONS

Flat Housing - FT

Flat Housing, Chicago Plenum - FTCP

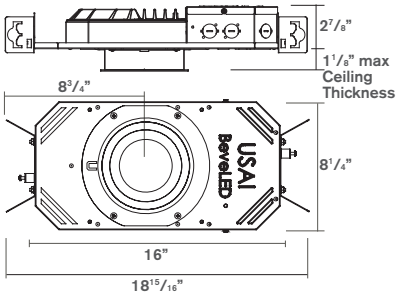

Flat Housing, IC-Rated - FTIC (up to 16W maximum)

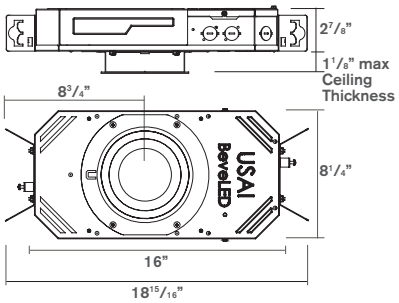

New Construction Narrow Width - NCSM
NCSM with Emergency Battery*

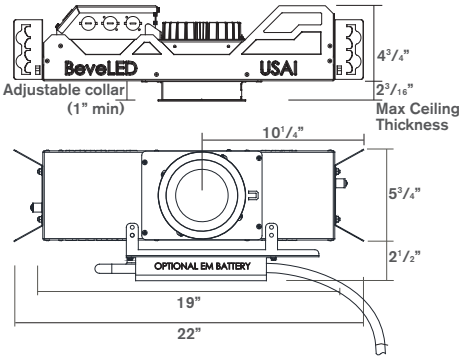

*Above ceiling access required for EM Battery pack.

New Construction - NC
Insulation-Contact Rated (24W Max) - NCIC
Chicago Plenum Rated (24W Max) - NCCP
NC with Emergency Battery

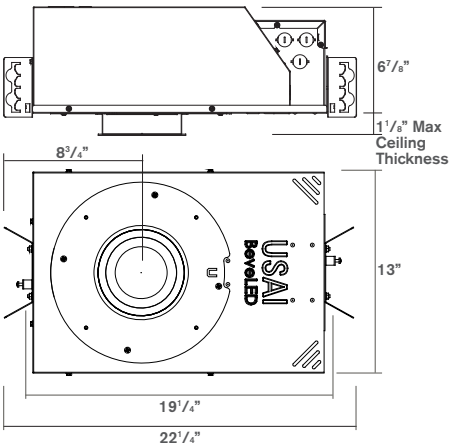

Insulation-Contact Rated (32W-33W) - NCIC
Chicago Plenum Rated (32W-36W) - NCCP

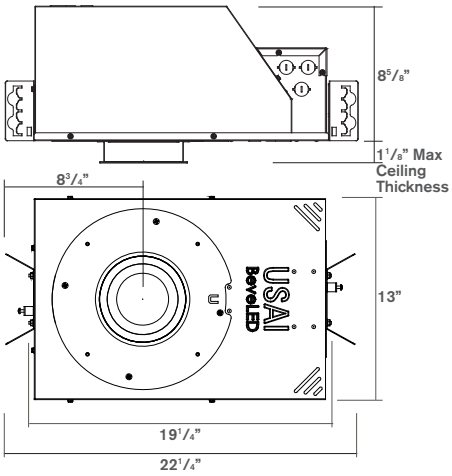

USAI LIGHTING COLLABORATORY
13 Crosby Street
New York, NY 10013
845-234-4090
showroom@usailighting.com

USAI LIGHTING HEADQUARTERS
1126 River Road
New Windsor, NY 12553
T: 845–565–8500
info@usailighting.com

© 2018. USAI, LLC. All rights reserved.
All designs protected by copyright. Covered by US Patents: 8,581,520, 8,456,109, 8,742,695, 9,671,091 and 7,832,889. Patents pending. USAI, BeveLED, Classic White, Warm Glow and Color Select are registered trademarks of USAI, LLC.
Revised 06/02/2022

BeveLED® 2.2 Complete
4.5″ Round Downlight - B4RD

USAI® Lighting

Trimless - B4RDL

TRIM DETAILS

Trimless - B4RDL

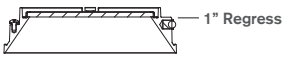

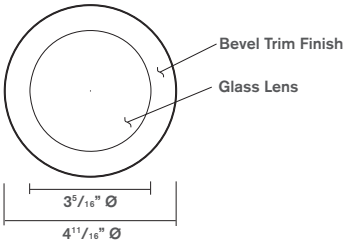

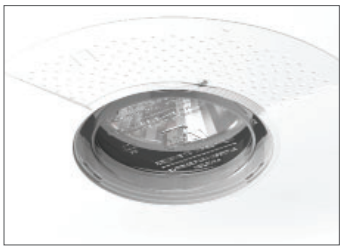

Clear acrylic overspray protector provided standard with every housing to keep out dust and contaminants during construction. Allows for use as work light.

HOUSING OPTIONS

Flat Housing - FT

Flat Housing, Chicago Plenum - FTCP

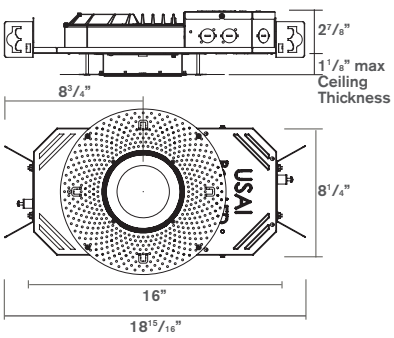

Flat Housing, IC-Rated - FTIC (up to 16W maximum)

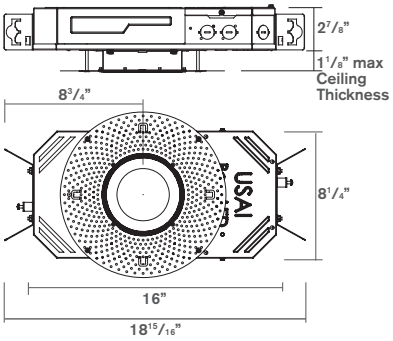

New Construction Narrow Width - NCSM
NCSM with Emergency Battery*

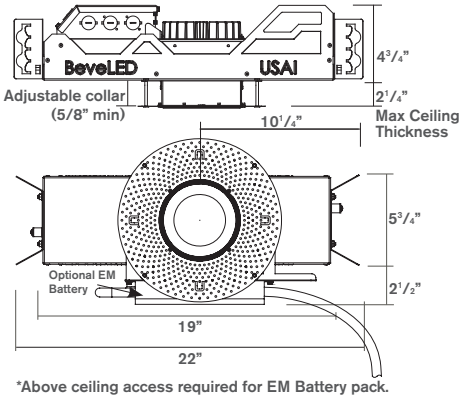

*Above ceiling access required for EM Battery pack.

New Construction - NC
Insulation-Contact Rated (24W Max) - NCIC
Chicago Plenum Rated (24W Max) - NCCP
NC with Emergency Battery

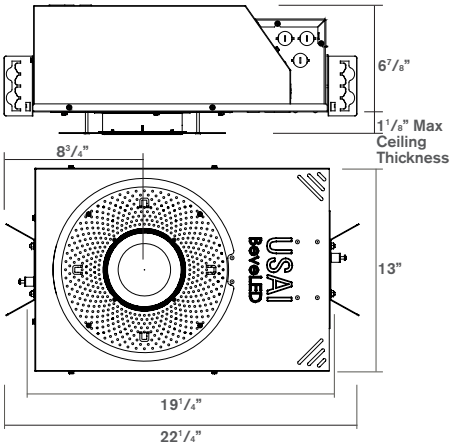

Insulation-Contact Rated (32W-33W) - NCIC
Chicago Plenum Rated (32W-36W) - NCCP

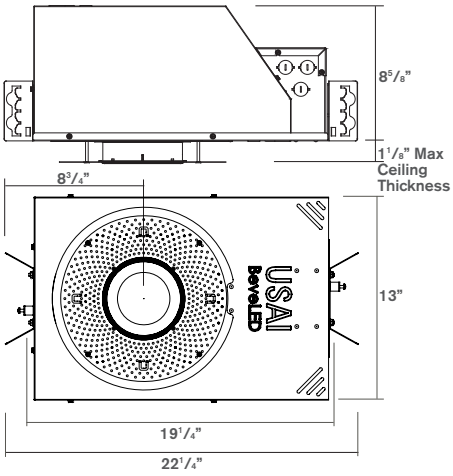

USAI LIGHTING COLLABORATORY
13 Crosby Street
New York, NY 10013
845-234-4090
showroom@usailighting.com

USAI LIGHTING HEADQUARTERS
1126 River Road
New Windsor, NY 12553
T: 845–565–8500
info@usailighting.com

© 2018. USAI, LLC. All rights reserved.
All designs protected by copyright. Covered by US Patents: 8,581,520, 8,456,109, 8,742,695, 9,671,091 and 7,832,889. Patents pending.
USAI, BeveLED, Classic White, Warm Glow and Color Select are registered trademarks of USAI, LLC.
Revised 06/02/2022

USAI® Lighting

Millwork - B4RDM

TRIM DETAILS

Millwork - B4RDM

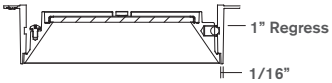

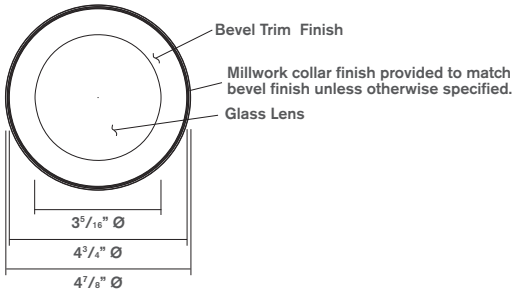

Clear acrylic overspray protector provided standard with every housing to keep out dust and contaminants during construction. Allows for use as work light.

HOUSING OPTIONS

Flat Housing - FT

Flat Housing, Chicago Plenum - FTCP

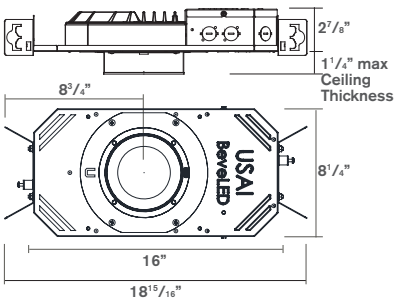

Flat Housing, IC-Rated - FTIC (up to 16W maximum)

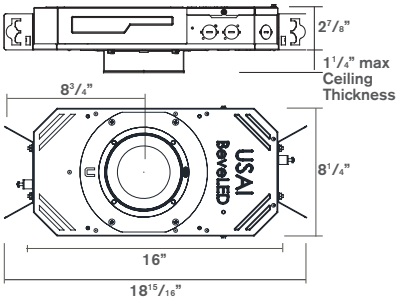

New Construction Narrow Width - NCSM
NCSM with Emergency Battery*

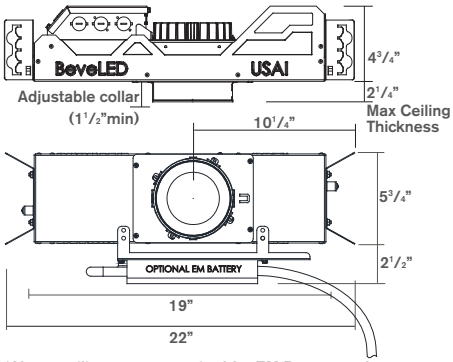

*Above ceiling access required for EM Battery pack.

New Construction - NC
Insulation-Contact Rated (24W Max) - NCIC
Chicago Plenum Rated (24W Max) - NCCP
NC with Emergency Battery

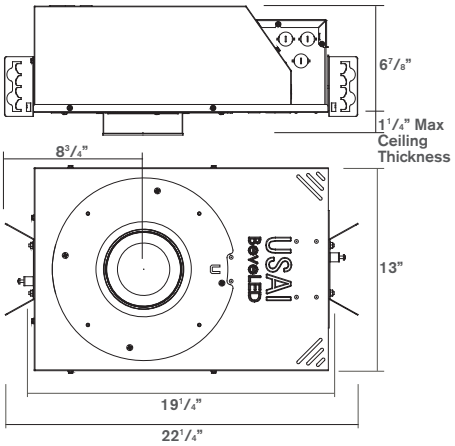

Insulation-Contact Rated (32W-33W) - NCIC
Chicago Plenum Rated (32W-36W) - NCCP

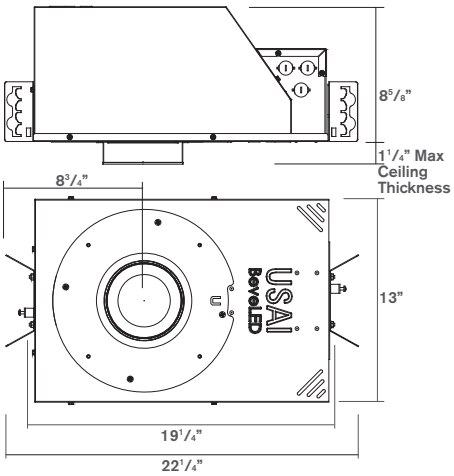

USAI LIGHTING COLLABORATORY
13 Crosby Street
New York, NY 10013
845-234-4090
showroom@usailighting.com

USAI LIGHTING HEADQUARTERS
1126 River Road
New Windsor, NY 12553
T: 845–565–8500
info@usailighting.com

© 2018. USAI, LLC. All rights reserved.
All designs protected by copyright. Covered by US Patents: 8,581,520, 8,456,109, 8,742,695, 9,671,091 and 7,832,889. Patents pending. USAI, BeveLED, Classic White, Warm Glow and Color Select are registered trademarks of USAI, LLC.
Revised 06/02/2022

BeveLED® 2.2 Complete
4.5″ Round Downlight - B4RD

USAI® Lighting

BEVELED 2.2 SPECIFICATIONS

FIELD REPLACEABLE LED LIGHT ENGINE
is serviceable through the aperture without tools or with a Philips screwdriver. All USAI Lighting light engines feature industry-leading color consistency.

FIELD REPLACEABLE DRIVER
Unless otherwise specified, a 0-10V, 100%-1% solid state electronic constant current integral D6E dimming driver with a high power factor is provided standard and sources 2mA. All integral dimming drivers are located within the fixture housing and are serviceable from below the ceiling through the aperture. Some on-time delay may be experienced depending on control system used. All dimming drivers comply with IEEE C62.41 surge protection. NOTE: Color Select tunable white requires additional 0-10V dimming wires; see wiring diagrams for details.

INTEGRAL EMERGENCY BATTERY
IOTA emergency battery provides backup power for 90 minutes. NC EM fixtures are provided with an integral emergency battery with integral test switch and can be serviced through the aperture from below the ceiling plane. NCSM EM fixtures are provided with an integral emergency battery with a remote test switch, which comes with a 24" lead length for location of the test switch. Remote EM test switch is dry/damp only; select EMW emergency option for a wet location-rated EM test switch. NCSM EM fixtures require above ceiling access for service of the EM pack. Fixtures that have no USAI EM option may be connected to an inverter (by others) for emergency lighting. Battery is not available with 347V.

Integral Test Switch is only provided with NC housing.
EM = Dry/Damp/Wet Location Rated Integral Test Switch
EMW is not an available selection with NC housings.

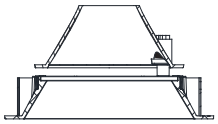

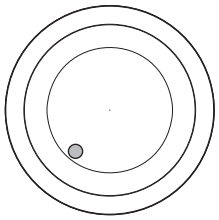

Remote Test Switch is only provided with NCSM housing. Above ceiling access is required with EM options and NCSM housing.
EM = dry/damp rated remote test switch
EMW = dry/damp/wet location, gasketed remote test switch

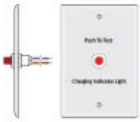

REMOTE LOCATION DRIVER
If a remote dimming driver is required, specify "RM" in the fixture part number and proceed to the RP table to complete the dimming driver specification. All remote power supplies must be clearly specified in the "RP" table, with one remote power supply required per fixture. Remote power supplies require enclosures by others that meet local codes and must be located in an accessible service panel within 100ft of the light fixture; see table below for coordination of enclosure sizes. All dimming drivers comply with IEEE C62.41 surge protection.

REMOTE LOCATION EMERGENCY
Remote emergency battery IOTA ILB-CP05 provides 5W to one fixture for 90 minutes. Remote power supplies with EM option require an enclosure by others with minimum size of 11"L x 6.75"W x 3.25"H that meets local codes. Emergency battery remote power supplies cannot be located any more than 50 feet from light fixture.

BEVELED 2.2 REMOTE POWER SUPPLY REQUIREMENTS

Remote Power Supply Dimming Option		Wire Gauge Required*	Minimum Enclosure Size Required (by others) RP Only	RP with EM Option**
RPC-01-09C3 RPC-01-12C3 RPC-01-16C3 RPC-01-24C3 RPC-01-33C3 RPC-01-36E1 RPC-01-16WG2 RPC-01-32WG2	**UNV-D4H** Lutron H ECO, 1% fade (4, 5) **UNV-D4** Lutron 3-Wire/Eco, 1% (6)	14/12	6.25" L x 4" W x 2" H	11" L x 6.75" W x 3.25" H
	UNV-D6A EldoLED 0-10V, 0.1% **UNV-D6B** EldoLED 0-10V, 0.1% **UNV-D6E** EldoLED 0-10V, 1% **UNV-D6F** EldoLED 0-10V, 1% **UNV-D7** EldoLED DALI, 0%	18/16		
	UNV-D28 EldoLED DMX 0.1%	18/16	9" L x 4" W x 2" H	
	120V-D3 Lutron 2-wire phase, 1%	14/12	6.25" L x 4" W x 2" H	
	120V-D19 Hatch 2-wire phase, 1% (1, 2, 4, 5)	14/12	5.75" L X 2.625" W X 2" H	

1 Not available for 36W
2 Not available for 32W or 33W
3 Not available with 24W
4 Not available for 9W
5 Not available for Warm Glow
6 Not available for Classic White. Warm Glow only

* Wire gauge 14/12 = Maximum distance from light fixture to remote power supply is 100' using 12 gauge wire, 50' using 14 gauge wire.
* Wire gauge 18/16 = Maximum distance from light fixture to remote power supply is 100' using 16 gauge wire, 50' using 18 gauge wire.
** Emergency battery remote power supplies cannot be located any more than 50 feet from light fixture.

USAI LIGHTING COLLABORATORY
13 Crosby Street
New York, NY 10013
845-234-4090
showroom@usailighting.com

USAI LIGHTING HEADQUARTERS
1126 River Road
New Windsor, NY 12553
T: 845–565–8500
info@usailighting.com

© 2018. USAI, LLC. All rights reserved.
All designs protected by copyright. Covered by US Patents: 8,581,520, 8,456,109, 8,742,695, 9,671,091 and 7,832,889. Patents pending.
USAI, BeveLED, Classic White, Warm Glow and Color Select are registered trademarks of USAI, LLC.
Revised 06/02/2022

BEVELED 2.2 SPECIFICATIONS

BEVELED 2.2 REMOTE POWER SUPPLY WIRING DIAGRAM

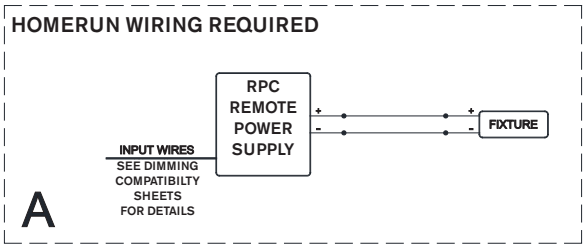

ENCLOSURES FOR REMOTE DRIVERS

Remote drivers require enclosures per local code. Enclosures can be provided by others, or for convenience, USAI can provide them to you. The choices available depend on the dimming driver specified. In the case of the metal encased drivers, USAI can offer a metal mounting plate sized 5-1/8" x 5-1/8" which attaches to the back of each dimming driver and can be installed directly inside a starndard 4" square junction box. For the other dimming drivers we offer, USAI can provide an enclosure sized 4-1/8" wide x 9-11/16" long x 2-3/8" deep to accommodate one dimming driver each. Please refer to remote dimming driver ordering tables for clarification on which driver installation accessories, mounting plate or enclosure, are available for each remote dimming driver option. When choosing to use USAI remote dimming driver mounting accessories, whether enclosures or mounting plates, specify the accessory in the accessories column of the remote dimming driver ordering table to indicate selection. Field wiring should be according to NEC code; per article 411.7. EC is responsible for adherence to all local codes. Refer to remote dimming driver tables for maximum distances, locations, and wire gauges required, which varies by driver type.

MP JUNCTION BOX MOUNTING PLATE

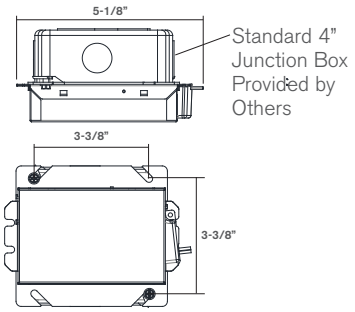

ENC SINGLE DRIVER ENCLOSURE

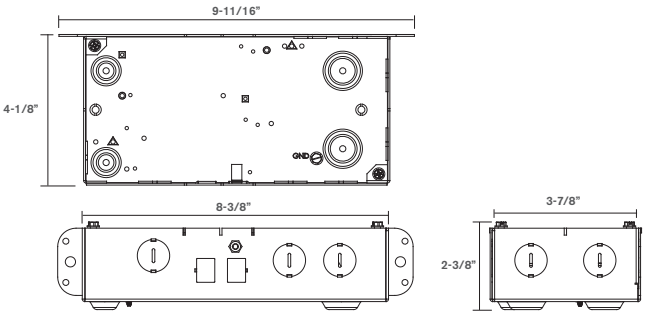

HOUSING

All BeveLED 2.2 fixtures are field-flexible which allows for field changes from trimless or millwork to trimmed with a simple components change with parts from USAI. Housings are fabricated of 20 ga. steel construction with thru wire J-box, 4 in 4 out at min. 90°C, #12 AWG thru branch circuit wiring, except for NCSM which is fabricated of 18 ga. steel. FTIC and NCIC housing for use with 9W, 12W, and 16W light engines only are rated for direct contact with spray foam insulation of R-42 or less. FTIC housing is IC-rated up to 16W maximum, NCIC housing is IC-rated up to 33W maximum.

MOUNTING

B4RDF overlap flange fixtures are designed for use in sheetrock, acoustical ceiling tile, and many other ceiling materials. B4RDL trimless fixtures are provided with a spackle collar and are designed for use in sheetrock/mud-in ceiling applications. B4RDM millwork fixtures are provided with a millwork collar in finish to match trim finish specified and are designed for use in wood/millwork, stone and tile construction applications. Butterfly brackets and residential grade adjustable nailer bars extendible from 14" to 24" centers with integral nails are provided standard for attachment to building structure. C-channel bars are optionally available for acoustical ceiling applications.

FIXTURE WEIGHT

FT, FTIC, and FTCP housings weigh 8 lbs. NC, NCIC, and NCCP housings weigh 16 lbs. NCSM housing weighs 10 lbs., NCSM with EM weighs 16.5 lbs, and NC housing with EM weighs 24.5 lbs.

WARRANTY

Based on IESNA LM80-2008, BeveLED has a 50,000 hour rated life at 70% lumen maintenance (L70). USAI Lighting Warranty covers replacement parts for 5 years from date of shipment. Ambient temperatures at fixture location should not exceed 40°C during normal operation.

USAI LIGHTING COLLABORATORY
13 Crosby Street
New York, NY 10013
845-234-4090
showroom@usailighting.com

USAI LIGHTING HEADQUARTERS
1126 River Road
New Windsor, NY 12553
T: 845–565–8500
info@usailighting.com

© 2018. USAI, LLC. All rights reserved.
All designs protected by copyright. Covered by US Patents: 8,581,520, 8,456,109, 8,742,695, 9,671,091 and 7,832,889. Patents pending.
USAI, BeveLED, Classic White, Warm Glow and Color Select are registered trademarks of USAI, LLC.
Revised 06/02/2022

BeveLED® 2.2 Complete
4.5″ Round Downlight - B4RD

USAI® Lighting

BEVELED 2.2 SPECIFICATIONS

CEILING CUT OUT
B4RDF Trimmed with Overlap Flange: 5-1/16" ∅
B4RDL Trimless Spackle-in: 5-1/2" ∅
B4RDM Millwork Knife-edge: 4-15/16" ∅

TRIM FINISH
BeveLED 2.2 trims are available in a wide range of finishes. USAI's standard powdercoat painted trim finishes are white, conduit silver, gray, black, and bronze. A clear matte anodized bevel and piano gloss black electrocoated bevel are also available with matching or contrast-painted flange finish options. Anti-microbial painted finish available in white. Natatorium finishes are triple-coated for corrosion resistance; these coatings are offered in painted finishes only and are not available for trimless or millwork. All trim finishes are dry/damp/wet location rated, with the exception of the anodized (-AC-) and electrocated (-AB-) bevel finishes, which are dry/damp only. Please contact the USAI factory with a RAL number specification for custom color trims, or specify the field-paintable primer finish option.

LISTINGS
Dry/Damp/Wet location. AC and AB trim finishes are dry/damp only. Remote EM test switch is dry/damp only. Select EMW option for wet location remote test switch. UL2043 rated for use in air handling plenums. NRTL/CSA-US tested to UL standards. IBEW union made.

NOTES
• Use of pressure washer voids warranty

PHOTOMETRICS
Consult factory or website for IES files. Tested in accordance with IESNA LM79.

USAI LIGHTING COLLABORATORY
13 Crosby Street
New York, NY 10013
845-234-4090
showroom@usailighting.com

USAI LIGHTING HEADQUARTERS
1126 River Road
New Windsor, NY 12553
T: 845–565–8500
info@usailighting.com

© 2018. USAI, LLC. All rights reserved.
All designs protected by copyright. Covered by US Patents: 8,581,520, 8,456,109, 8,742,695, 9,671,091 and 7,832,889. Patents pending.
USAI, BeveLED, Classic White, Warm Glow and Color Select are registered trademarks of USAI, LLC.
Revised 06/02/2022

USAI® Lighting

LED COLOR OPTIONS

Classic White Light

Our proprietary LED light engines achieve a 2-step MacAdam ellipse along the black body locus, resulting in reliable and uniform color from fixture to fixture. You'll see the results in consistently beautiful light throughout your space, whichever USAI LED product you specify.

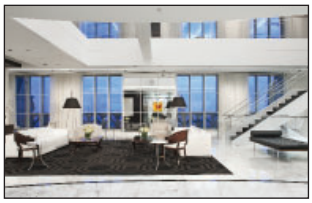

Warm Glow® Dimming

Warm Glow Dimming provides warmth and glow once possible only in dimmed incandescent sources. Utilizing our patented proprietary algorithm and circuitry, Warm Glow Dimming technologies precisely mimic the black body curve of a standard 100W A19 lamp by gradually transitioning from 2700K or 3000K down to 2200K. The result is virtually indistinguishable from an incandescent light source.

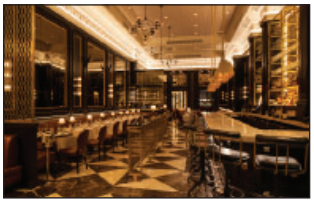

Color Select® Tunable White

Color Select represents the next innovation in color temperature control for advanced LED recessed downlighting. Color Select® products allow users to adjust color temperature from 6000K down to 2200K while independently adjusting intensity to achieve ultimate control over the quality of light in a space with a single fixture type. Color Select interfaces with standard dimming and control systems.

USAI LIGHTING COLLABORATORY
13 Crosby Street
New York, NY 10013
845-234-4090
showroom@usailighting.com

USAI LIGHTING HEADQUARTERS
1126 River Road
New Windsor, NY 12553
T: 845–565–8500
info@usailighting.com

© 2018. USAI, LLC. All rights reserved.
All designs protected by copyright. Covered by US Patents: 8,581,520, 8,456,109, 8,742,695, 9,671,091 and 7,832,889. Patents pending.
USAI, BeveLED, Classic White, Warm Glow and Color Select are registered trademarks of USAI, LLC.
Revised 06/02/2022

Job: Approval: L2 Type:

VISION·3 LIGHTING

LED Sign Light **MODEL SL2**
100-277V 20W Max. LED w/ Integral Driver
21W Max. COB LED

Specifications

Material
Machined 6061-T6 aluminum with 18-8 stainless steel hardware.

Head
Machined head comes in two styles: Side Mount and Rear Mount. (See illustration for aiming capability of each head style.)

Stem
1" diameter machined stem comes in various stem lengths and three stem styles: Straight, 180° U-Bend, and 90° Gooseneck. (See illustration for calculating overall projection from wall for each stem style.)

Knuckle
Rotate and Lock knuckle (protected under U.S. Patents #6,966,679, #7,108,405 and #7,458,552) mounts the head to the stem and allows for adjustability. Double taper design allows fixture to hold position during aiming and ensures a solid lock when tightened. LED models have a molded silicone wire seal to prevent water entry at knuckle.

Cap
Machined caps come in seven styles, lock in place with one 18-8 stainless steel set screw, and are sealed to the body with a high temperature silicone O-ring. Regress Lens caps have drain holes for water drainage from top of lens if mounted in the up position. All caps accept up to three internal accessories, held in place by a stainless steel clip.

Mount Canopy
Available with the following mount options: MO3 (Machined Round Canopy), MO15 (Machined Square Canopy), and MO12 (Surface Mount Canopy). Stem is permanently attached to mount canopy using a 304 stainless steel threaded nipple to prevent loosening or sagging. See mount specification sheets for more information. (Mount canopy must be mounted to an appropriate wall or junction box, in such a manner that is capable of holding the weight and torque created by the fixture. Junction box and hardware not included).

Finish
TGIC thermo set polyester powder coat paint available in 14 standard colors. Finish is applied over a corrosion resistant, hexavalent chromium free, RoHS compliant coating. Also available in one additional metal finish: Clear Anodized.

Lens
1/8" thick, tempered, clear lens, secured to cap with a high temperature, UV curing, silicone adhesive.

LED
Integral Driver LED: 100 to 277 VAC (50/60 Hz) input, 20W max. power (17W@120V, 20W@277V). LED lamp features: integral driver, 1280 lm max output, 75 lm/W max efficacy, field changeable optics (15º, 23º, 35º & 51º), push button selection of light level (100%, 80%, 55% & 18%), 120-277V 0-10V dimming available at three highest (100%, 80%, 55%) light levels, 120V phase dimming at highest (100%) light level (see Dimmer Compatibility List), an L70 of 60,000 hrs., and patented LEDSense® thermal management to ensure reliability and lumen maintenance. Note: thermal management system may cause power input and light output to vary slightly depending on fixture material, orientation, lens accessories, mounting, and ambient temperature.

COB LED: COB LED package uses modular industry standard components to simplify future upgrades and includes features like: performance of 1800 lm, 16W max input (@350mA) or 2400 lm, 21W max input (@500mA), field replaceable optics (12º, 25º, 40º & 60º), and an L70 > 55,000 hrs. Note: requires Vision3 approved 350mA or 500mA constant current driver mount.

Certification
CSA tested & certified to US and Canadian safety standards for wet location wall mount use per UL1598.

All ratings subject to change without notice. See web site or contact V3 for most current info.

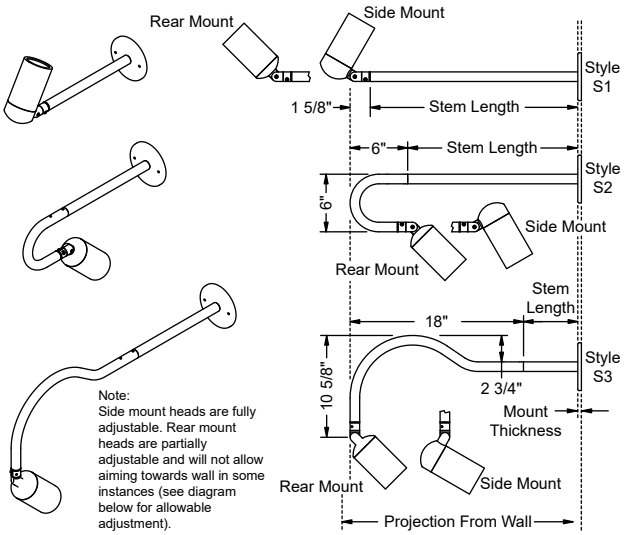

Projection From Wall = Stem Length + Mount Thickness + 6" (for Style S1)
1 5/8" (for Style S1)
6" (for Style S2)
18" (for Style S3)

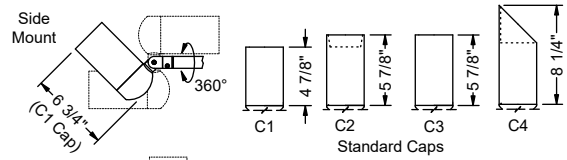

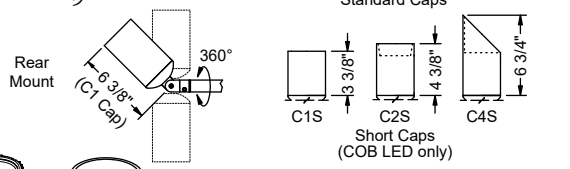

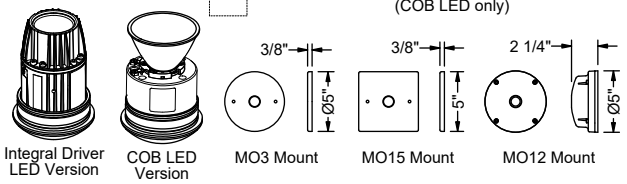

Ordering Information

SL2A — — — — — — — — — — — — — — — —

Model
SL2A

Finish
Powder Coat Finishes:
- **BL** - Black
- **BLT** - Textured Black
- **BN** - Bronze
- **BNT** - Textured Bronze
- **BAT** - Textured Bark
- **WI** - White
- **GRT** - Textured Green
- **SI** - Silver
- **GY** - Grey
- **BE** - Beige
- **GNT** - Textured Granite
- **SAT** - Textured Sand
- **PAT** - Textured Patina
- **EAT** - Textured Earth

Metal Finishes:
- **CLA** - Clear Anodized

Head
- **SM** - Side Mount
- **RM** - Rear Mount [1]

Cap Style
Standard Caps:
- **C1** - Flush
- **C2** - Regress Lens
- **C3** - Regress Lamp
- **C4** - 45° Angled

Short Caps [2]**:**
- **C1S** - Flush
- **C2S** - Regress Lens
- **C4S** - 45° Angled

Style
- **S1** - Straight [1]
- **S2** - 180° U-Bend (available with 12" up to 42" stem option)
- **S3** - 90° Gooseneck (available with up to 30" stem option)

Stem [3]
- **6** - 6" Stem
- **12** - 12" Stem
- **18** - 18" Stem
- **24** - 24" Stem
- **30** - 30" Stem
- **36** - 36" Stem
- **42** - 42" Stem
- **48** - 48" Stem

Mount [4]
Integral Driver LED:
- **MO3** - Round Canopy
- **MO15** - Square Canopy
- **MO12** - Surface Mount Canopy

COB LED:
- **MO12-16-UNV-350-Z** - 16W, 120-277V, 350mA, 0-10V dimming
- **MO12-16-120-350-P** - 16W, 120V, 350mA, phase dimming
- **MO12-25-UNV-500-Z** - 25W, 120-277V, 500mA, 0-10V dimming
- **MO12-25-120-500-P** - 25W, 120V, 500mA, phase dimming

Light Engine
Integral Driver LED [5]**:**
- **137** - 15°, 3000K, >80 CRI
- **138** - 23°, 3000K, >80 CRI
- **139** - 35°, 3000K, >80 CRI
- **140** - 51°, 3000K, >80 CRI

COB LED [6]**:**
C01-X-XX-XX

CRI	CCT	Optics
8 - >80	**27** - 2700K	**12** - 12°
9 - >90	**30** - 3000K	**25** - 25°
	35 - 3500K	**40** - 40°
	40 - 4000K	**60** - 60°

Lens Accy
- **0** - None
- **L1** - Spread
- **L2** - Linear
- **L3** - Softening

Filter
- **0** - None
- **F1** - Red
- **F2** - Blue
- **F3** - Lt. Blue
- **F4** - Green
- **F5** - Amber
- **F6** - Pink

Louver
- **0** - None
- **H1** - Hex

Notes:
1. Rear Mount head has limited adjustability and will not aim back towards the wall when on an S1 Style stem. See spec. sheet illustration for aiming capability of each head style .
2. Short cap options only available with COB LED options.
3. Other stem lengths are available upon request. Consult your Vision3 Lighting sales representative.
4. See MO3, MO12, or MO15 specification sheet for mount details.
5. Integral Driver LED available in other color temperatures and / or CRI's (contact V3 for info).
6. COB LED must be used with V3 approved constant current driver mount.
7. Specifications, certifications, and ordering information are subject to change. Please check website for latest specification sheets.

Example: **SL2A - BN - SM - C3 - S3 - 24 - MO12-16-120-350-P - C01-8-30-25 - L1 - 0 - 0**

©2004 - 2020 **Vision3 Lighting**®
P.O. Box 607, Fowler, CA 93625 (559) 834-5749 (559) 834-4779 fax www.vision3lighting.com
revision 8/18/20

L3

TARGETTI

MR. SMITH

Wall Mount Luminaire

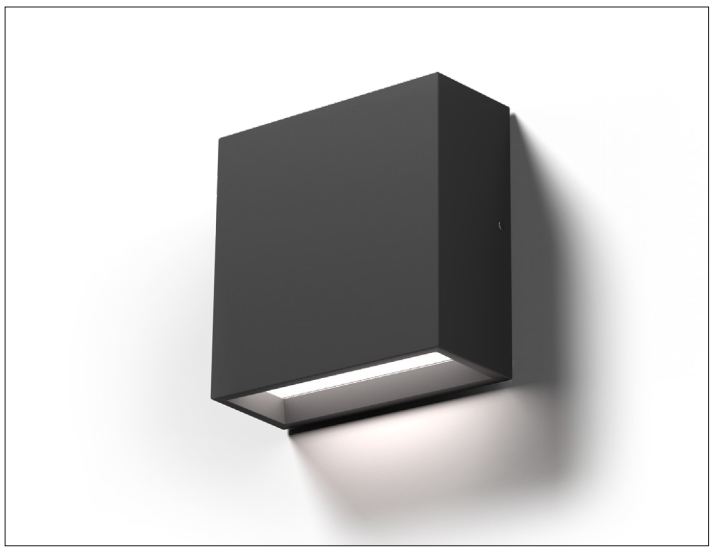

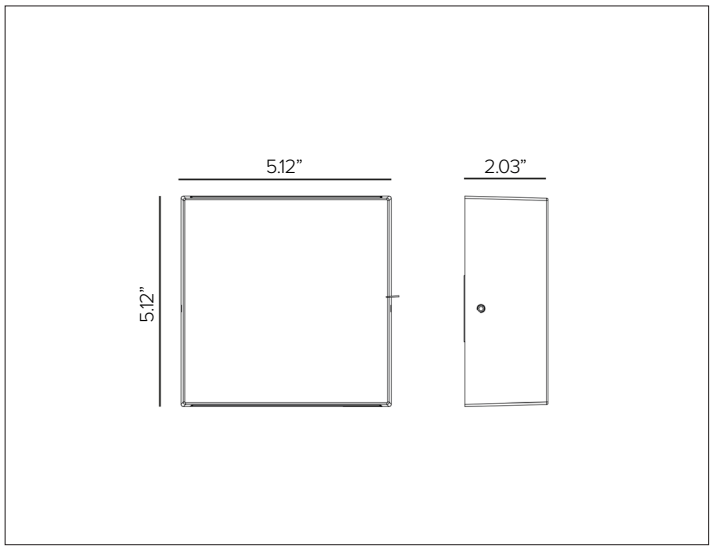

Dark Sky | ADA | Marine | RoHS3 | IP65 | cULus

CONCEPT

Surface wall mounted LED luminaire.

MECHANICAL CHARACTERISTICS

Housing	5.12”H x 5.12”W x 2.03”D
Materials	Powder coated anodized die-cast aluminum body and optical unit with injection molded opal polycarbonate lens.
Finish	Textured finish. Ferrite Dark Grey · Heritage Brown · Bronze Black · White · Sandstone Grey
Power Connection	Fixture provided with 7”L line voltage dimming wire.
Functionality	Direct emission features regressed lens for maximum visual comfort. Indirect emission features flush lens with a tapered design for maximum water flow-off.
Mounting	Surface mounted. Fixture is supplied with a universal adapter plate to mount over standard 4”x4” junction box.
BUG	MD: B1–U0–G0 Dark Sky Compliant MU: B0–U4–G0 BI: B1–U4–G0
Weight	1.43lbs
Protection	IP65
Impact	IK08

CERTIFICATIONS

cULus Wet Location Listed.
Tested in accordance with LM-79-08.
Compliant for California installations.
IEC 62471
RoHS3 EU 215/863

WARRANTY

5 year limited warranty

ELECTRICAL CHARACTERISTICS

Power Supply	Integral 4/1 smart driver (Non-Dimmable / 0-10V / Reverse Phase / Forward Phase).
Wattage	Monoemission 7W / Biemission 13W
Voltage	120-277V AC 50/60Hz

SOURCE

High efficiency LED Chip on Board.

TM30	*CCT (Nominal)*	*CRI*	*Rf*	*Rg*	*SDCM*
	2700K	84	82	96	2
	3000K	84	83	96	2
	3500K	80	83	95	2
	4000K	84	82	95	2

Ra90 available upon request

OPTIC

MicroPet high reflectance white spotlight.

Beam		*Mono Direct*	*Mono Indirect*	*Biemission*
Delivered Lumens	***2700K***	500Lm	636Lm	1,136Lm
	3000K	522Lm	664Lm	1,186Lm
	4000K	535Lm	681Lm	1,217Lm

For 3500K lumen values use multiplier of 1.02 from 3000K.

Efficacy	97Lm/W max. Refer to photometric graphs for specific values.
Lifetime	L92/B10 30,000hrs at max TA +25ºC L90/B10 50,000hrs at max TA +25ºC
Photobiological Classification	Low risk photobiological safety RG1

MR. SMITH

SPECIFICATION INFORMATION

MRS							
1	2	3	4	5	6	7	8
							OPTIONAL

Ex: MRSW41FEMDL130

1 - PRODUCT CODE	2 - TYPE	3 - DRIVER	4 - FINISH	5 - EMISSION	6 - WATTAGE	7 - KELVIN
MRS — MR SMITH	**W** — Wall Mounted	**41** — 4/1 Smart Dimming *(Non-Dimming / 0-10V / Reverse Phase / Forward Phase)*	**FE** — Ferrite Dark Grey **HB** — Heritage Brown **BZ** — Bronze **WT** — White **BT** — Black **SG** — Sandstone Grey **RAL** — Custom RAL	**MD**[B] — Monoemission Direct **MU**[B] — Monoemission Indirect **BI**[C] — Biemission	**L1** — 7W **L2**[B] — 13W	**27** — 2700K **30** — 3000K **35** — 3500K **40** — 4000K

8 - OPTIONAL
MG[A] — Marine Grade

[A] Marine Grade is recommended for use in environments with occasional exposure to salt air, reclaimed water, fertilizers, chemical cleaners, or frequent pressure washing (steam) cleaning. Fixture housing complete with marine grade cataphoresis suitable for use in marine grade environments. Not to be in direct contact with salt or corrosive agents for extended periods of time.
[B] Monoemission Direct and Monemission Indirect only available in 7W.
[C] Biemission only available in 13W.

MR. SMITH

PHOTOMETRY

MONOEMISSION DIRECT

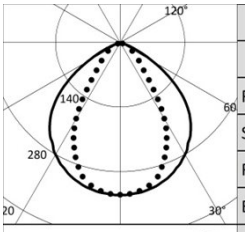

2700K		H(m)	D1(m)	D2(m)	Emax(lx)
Ra84			102°	64°	
Fixture Power	7W	1	2.46	1.26	301
Source Flux	913lm	2	4.91	2.51	75
Fixture Flux	500lm	3	7.37	3.77	33
Efficacy	71lm/W	4	9.82	5.03	19
TS1198 Imax=330cd/klm	Imax 302cd	5	12.28	6.29	12

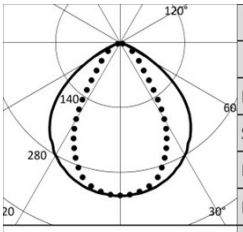

3000K		H(m)	D1(m)	D2(m)	Emax(lx)
Ra84			102°	64°	
Fixture Power	7W	1	2.46	1.26	315
Source Flux	954lm	2	4.91	2.51	79
Fixture Flux	522lm	3	7.37	3.77	35
Efficacy	75lm/W	4	9.82	5.03	20
TS1198 Imax=330cd/klm	Imax 315cd	5	12.28	6.29	13

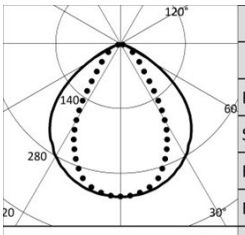

4000K		H(m)	D1(m)	D2(m)	Emax(lx)
Ra84			102°	64°	
Fixture Power	7W	1	2.46	1.26	323
Source Flux	979lm	2	4.91	2.51	81
Fixture Flux	535lm	3	7.37	3.77	36
Efficacy	76lm/W	4	9.82	5.03	20
TS1198 Imax=330cd/klm	Imax 323cd	5	12.28	6.29	13

LCS Graph

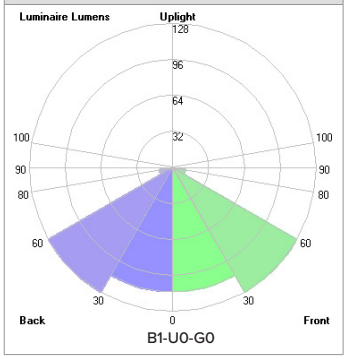

MONOEMISSION INDIRECT

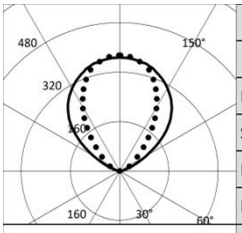

2700K	
Ra84	
Fixture Power	7W
Source Flux	913lm
Fixture Flux	636lm
Efficacy	91lm/W
TS1197 Imax=379cd/klm	Imax 346cd

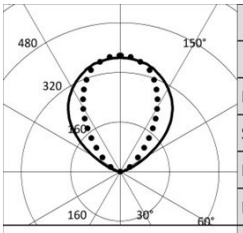

3000K	
Ra84	
Fixture Power	7W
Source Flux	954lm
Fixture Flux	664lm
Efficacy	95lm/W
TS1197 Imax=379cd/klm	Imax 361cd

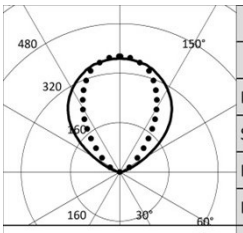

4000K	
Ra84	
Fixture Power	7W
Source Flux	979lm
Fixture Flux	681lm
Efficacy	97lm/W
TS1197 Imax=379cd/klm	Imax 371cd

LCS Graph

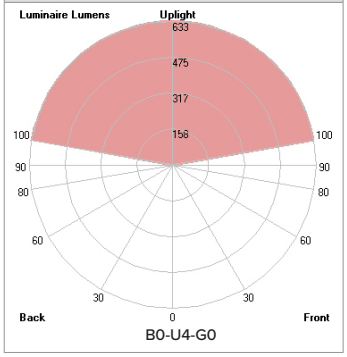

MR. SMITH

PHOTOMETRY

BIEMISSION

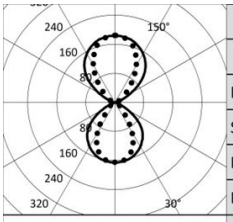

2700K		H(m)	D1(m)	D2(m)	Emax(lx)
Ra84			102°	64°	
Fixture Power	13W	1	2.46	1.26	301
Source Flux	1827lm	2	4.91	2.51	75
Fixture Flux	1136lm	3	7.37	3.77	33
Efficacy	87lm/W	4	9.82	5.03	19
TS1199 Imax=184cd/klm	Imax 337cd	5	12.28	6.29	12

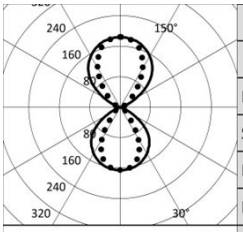

3000K		H(m)	D1(m)	D2(m)	Emax(lx)
Ra84			102°	64°	
Fixture Power	13W	1	2.46	1.26	315
Source Flux	1907lm	2	4.91	2.51	79
Fixture Flux	1186lm	3	7.37	3.77	35
Efficacy	91lm/W	4	9.82	5.03	20
TS1199 Imax=184cd/klm	Imax 351cd	5	12.28	6.29	13

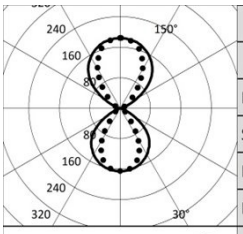

4000K		H(m)	D1(m)	D2(m)	Emax(lx)
Ra84			102°	64°	
Fixture Power	13W	1	2.46	1.26	323
Source Flux	1957lm	2	4.91	2.51	81
Fixture Flux	1217lm	3	7.37	3.77	36
Efficacy	94lm/W	4	9.82	5.03	20
TS1199 Imax=184cd/klm	Imax 361cd	5	12.28	6.29	13

LCS Graph

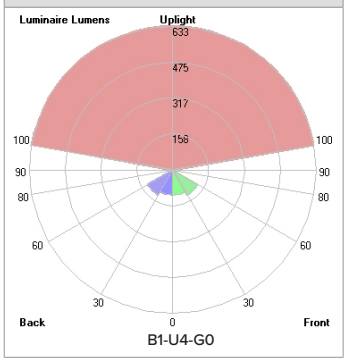

TARGETTI

ZEDGE LINE

L4

Reccessed Direct View Linear Line Voltage Steplight

Concept: Recessed linear LED steplight for indoor and outdoor applications.
Materials: Die-cast anodized aluminum body and external powder coated frame. [A]Consult factory for use in marine grade environments.
Source: LED High Efficiency Board.
Optic: Polycarbonate opal screen. Floor Washer frame allows for uniform optical distribution on the floor and excellent visual comfort.
Mounting: To be completed with PVC installation sleeve for flush or semi-flush installations. Secured with stainless steel spring system.
Driver: Integrated 4/1 driver (Non-dimmable / 0-10V / Reverse Phase / Forward Phase). Dimmable to 1%.
Finish: Textured Standard Finishes – Ferrite Grey / Heritage Brown / Bronze RAL 8019 / White / Black / Sandstone Grey
Wattage: 9W
Color Temperature: 2700K / 3000K / 3500K / 4000K
CRI: Ra84

Delivered Lumens:	**2700K**	**3000K**	**3500K**	**4000K**
	230Lm	245Lm	251Lm	257Lm

Lumen Maintenance (L70): 50,000hrs
Calculation for LED fixtures are based on measurements that comply with IES LM-80.
Voltage: Universal Voltage 120-277V AC 50/60Hz
IK Rating: IK10
IP Rating: IP66
BUG: B0-U1-G0
Certifications: cULus Listed Wet Location
Tested in accordance with LM-79-08
Energy efficient for California installations.
Warranty: 5 year limited warranty
Designed in collaboration with Gensler as Product Design Consultant
[A]*Consult factory for use in marine grade environments. Not to be in direct contact with salt for extended periods of time or used with corrosive agents.*

Shown in Ferrite Grey Finish

Marine[A] IP66 c UL us

Suitable for indoor and outdoor applications.

PRODUCT CODE	DRIVER	OPTICS	FINISH	WATTAGE	COLOR TEMP	+	INSTALLATION
ZEL – ZEDGE LINE	**41** – 4/1 Dimming (Non-Dimming / 0-10V / Reverse Phase / Forward Phase)	**FW** – Floor Washer	**FE** – Ferrite Grey **HB** — Heritage Brown **BZ** — Bronze RAL8019 **WT** — White Textured **BT** — Black Textured **SG** — Sandstone Grey	**L2** — 9W	**27** — 2700K **30** — 3000K **35** — 3500K **40** — 4000K		*See page 2*

Views

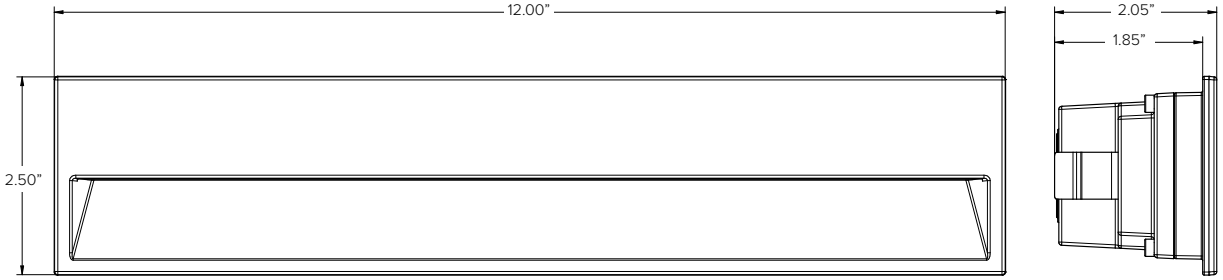

TARGETTI

ZEDGE LINE

INSTALLATION (REQUIRED)	
1E3447	PVC installation back box for flush or semi-fush installations, black finish. ¾" and ½" knock-outs made for EMT connectors and conduit entry. Suitable for concrete pour, drywall, or stucco applications. Dimensions: 12.13"W x 2.70"H x 3.00"D

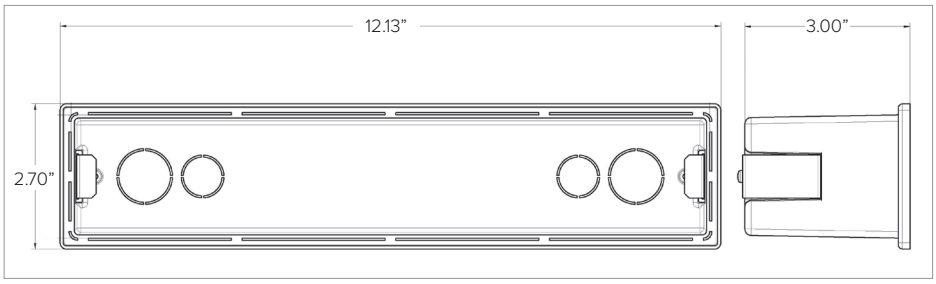

1E3447

Photometry

FLOOR WASHER

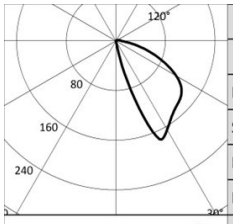

2700K		H(m)	D1(m)	D2(m)	Emax(lx)
Ra84			48°	88°	
Fixture Power	9W	1	1.90	2.12	155
Source Flux	1175lm	2	3.80	4.25	39
Fixture Flux	230lm	3	5.70	6.37	17
Efficacy	26lm/W	4	7.60	8.49	10
TS1128 Imax=174cd/klm	Imax 204cd	5	9.50	10.61	6

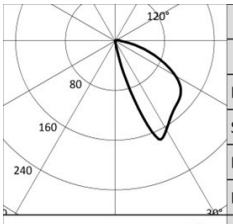

3000K		H(m)	D1(m)	D2(m)	Emax(lx)
Ra84			48°	88°	
Fixture Power	9W	1	1.90	2.12	165
Source Flux	1250lm	2	3.80	4.25	41
Fixture Flux	245lm	3	5.70	6.37	18
Efficacy	27lm/W	4	7.60	8.49	10
TS1128 Imax=174cd/klm	Imax 217cd	5	9.50	10.61	7

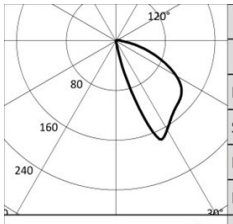

3500K		H(m)	D1(m)	D2(m)	Emax(lx)
Ra84			48°	88°	
Fixture Power	8W	1	1.90	2.12	169
Source Flux	1280lm	2	3.80	4.25	42
Fixture Flux	251lm	3	5.70	6.37	19
Efficacy	31lm/W	4	7.60	8.49	11
TS1128 Imax=174cd/klm	Imax 222cd	5	9.50	10.61	7

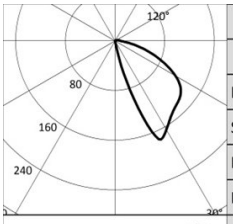

4000K		H(m)	D1(m)	D2(m)	Emax(lx)
Ra84			48°	88°	
Fixture Power	9W	1	1.90	2.12	173
Source Flux	1310lm	2	3.80	4.25	43
Fixture Flux	257lm	3	5.70	6.37	19
Efficacy	29lm/W	4	7.60	8.49	11
TS1128 Imax=174cd/klm	Imax 228cd	5	9.50	10.61	7

Isolux Diagram

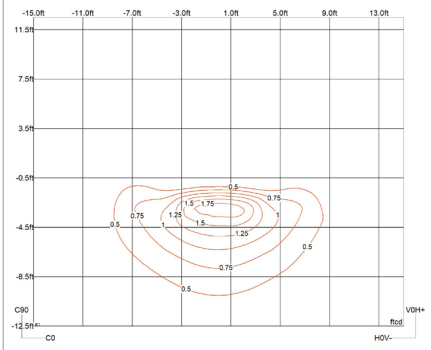

Mounting Height = 18"

LCS Graph

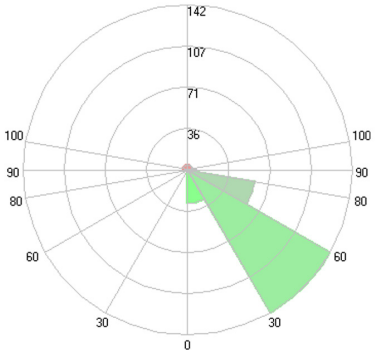

B0-U1-G0

L5

LQ421 SERIES
Lumiquad - LED
4” COLUMN

TYPE: _____ QUANTITY: _____ PROJECT: _____

CATALOG NUMBER:							
FIXTURE	SUFFIX	VOLTAGE	FINISH	OPTION	OPTION	OPTION	OPTION

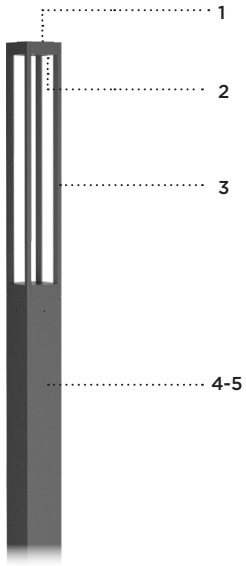

1- Cast aluminum top cover.
2- Optical system assembly.
3- 4x extruded aluminum struts.
4- Cast aluminum driver housing.
5- 4” (102mm) x 4” (102mm) extruded aluminum square body.

LQ421

MATERIALS
Lumiquad column is made of 6061-T6 extruded aluminum alloy. All other parts are made of corrosion resistant 356 aluminum alloy with a copper (CU) content of less than 0.1%.

ELECTRICAL
DRIVER Standard driver is 0-10V dimming-ready (dims to 10%) with: 120-277 multi-volt compatibility (50-60Hz), operating temperatures of -40ºC/-40ºF to 55ºC/131ºF, output over voltage protection, output over current protection, output short circuit protection with auto-recovery.

LED 3000K/3500K/4000K CCT with 80 CRI.

Optional true amber LED for turtle sensitive areas. Wavelengths: 585nm to 597nm.

LIFE
60,000hrs $L_{70}B_{50}$ (based on IESNA TM-21 Test Method and LM-80 data).
Up to 70,000hrs $L_{70}B_{50}$ (calculated projection from LM-80 data).

FINISH
Five-stage preparation process includes preheating of cast aluminum parts for air extraction. Polyester powder coating is applied through an electrostatic process, and oven cured for long term finish.

CERTIFICATION
Certified and Approved as per CSA C22.2 No.: 250.0 standard and ANSI/UL 1598 standard, for wet location. Rated IP65.
Photometric testing performed by an independent laboratory in accordance with IES LM-79-08 standards at 25ºC. Lumen depreciation in accordance with IESNA LM80 standards.

MOUNTING
Lumiquad column is designed for ease of access and installation. The cast aluminum base plate is secured with a set of (4) 1/2”-13 x 18” lg. galvanized anchor bolts.

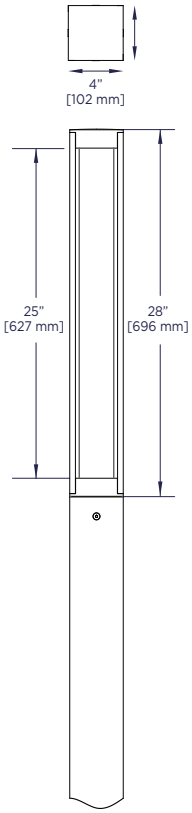

LQ421

June 2022 Rev. 6

LUMINIS | Toll free: 866.586.4647 Fax: 514.683.8872 Email: info@luminis.com
260 Labrosse, Pointe-Claire (QC) Canada H9R 5L5

LUMINIS.COM

Luminaires may be altered for design improvement without prior notice.

TYPICAL PHOTOMETRY SUMMARY

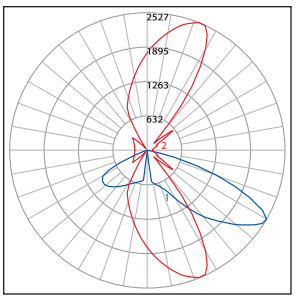

Descriptive Information

LQ421-L1L30-R2
Total Lms: 3100 Lumens
Total Input Watts: 37,4 W
Efficacy: 82,8 Lumens/Watt
BUG: B1-U0-G1
CCT/CRI: 4000K/80
Maximum Candela: 2458 @ 55°H/29°V

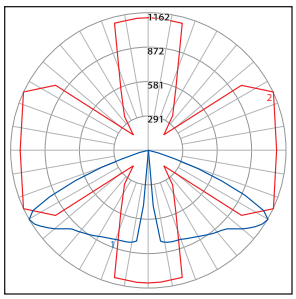

Descriptive Information

LQ421-L1L30-R5
Total Lms: 3034 Lumens
Total Input Watts: 50,9 W
Efficacy: 59,6 Lumens/Watt
BUG: B1-U0-G1
CCT/CRI: 4000K/80
Maximum Candela: 1134 @ 19.5°H/55°V

Please visit our web site www.luminis.com for complete I.E.S. formatted download data.

LUMINAIRE SELECTION

MODEL#

☐ LQ421

LED LIGHT SELECTION (4000K/80CRI)

	SUFFIX	DELIVERED LUMENS	INPUT WATTS
Type II	☐ L1L10-R2	1159	12
	☐ L1L20-R2	2184	25
	☐ L1L30-R2	3100	38
Type V	☐ L1L10-R5	1039	14
	☐ L1L20-R5	2078	31
	☐ L1L30-R5	3034	51

AMBER LED LIGHT SELECTION - TURTLE FRIENDLY

	SUFFIX	DELIVERED LUMENS	INPUT WATTS
Type II	☐ L1L2K2A-R2	320	12
Type V	☐ L1L2K2A-R5	301	12

OAH COLUMN SELECTION

POLE FOR	LQ420
☐ LQP469	96”
☐ LQP493	120”
☐ LQP4117	144”
☐ LQP4141	168”

VOLTAGE [1]

☐ 120V
☐ 277V

Optional
☐ 347V
☐ 480V

FINISH

STANDARD COLORS*

☐ **WHT** Snow white
☐ **BKT** Jet black
☐ **BZT** Bronze
☐ **MST** Matte silver
☐ **GRT** Titanium gray
☐ **DGT** Gun metal
☐ **CHT** Champagne
☐ **SGT** Steel gray
☐ **BGT** English cream

OPTIONAL COLORS

☐ **CS** Custom color
☐ **RAL** RAL# color

*Refer to color chart

OPTIONS

ELECTRICAL

☐ **FS** Fuse
☐ **SP** Surge protector 10KV
☐ **PH** Photocell

ACCESSORIES

☐ **GFI** Ground fault circuit interruption flush receptacle [2]
☐ **CGF** Ground fault circuit interruption with clear in-use cover [2]
☐ **BLC1** Blockout shield (one side) [3]
☐ **BLC2** Blockout shield (two sides, installed at 90°) [4]
☐ **BLC3** Blockout shield (three sides) [4]
☐ **LVR** Glare control louvers provided with a 90° lens [5]
☐ **MSD** Motion sensor device (high/low 25%)
255° coverage
Installed at 180° from hand hole
120/277VAC, 50/60Hz (or 230VAC, 50Hz)

LIGHT

Alternate CCT ºK LED (LCF: Lumen conversion factor)

☐ **K27** 2700K CCT 80 CRI (LCF: 0.91)
☐ **K3** 3000K CCT 80 CRI (LCF: 0.94)
☐ **K35** 3500K CCT 80 CRI (LCF: 0.98)
☐ **K4** 4000K CCT 80 CRI (LCF: 1.00)

NOTE: Other CCT & higher CRI available, please consult factory.

CONTROL

☐ **NLTAIR2** nLight AIR Control gen2, Pole mounted black sensor. [6, 7, 8]

FAUX WOOD COLORS [9]

☐ **ADG** American douglas
☐ **BRC** Birch
☐ **CHN** Chestnut
☐ **CRY** Cherry
☐ **KNP** Knotty pine
☐ **MPL** Maple
☐ **OFL** Oak
☐ **RSW** Rosewood
☐ **TEK** Teak
☐ **WLN** Walnut

NOTES

1- If no voltage is specified, luminaires are factory prewired by default for 120V. For other voltages, please specify with catalog number, or consult factory.
2- GFI and CGF options are installed 30” above grade unless otherwise specified. CGF cover protrudes by 3.62” (92mm). 120V required for GFI or CGF.
3- BLC1 installed on back side when distribution Type II is selected.
4- BLC2 and BLC3 not available with distribution type II.
5- LVR cannot be combined with Blockout shield option.
6- Not compatible with PH, MSD.
7- Compatible with Amber Led.
8- White sensor available upon request.
9- Faux wood finish not applied to the fixture head, base cover or accessories.

For IDA certification compliance, luminaire must be ordered with 3000K or warmer.

LUMINIS®

June 2022 Rev. 6

LUMINIS | Toll free: 866.586.4647 Fax: 514.683.8872 Email: info@luminis.com
260 Labrosse, Pointe-Claire (QC) Canada H9R 5L5

Luminaires may be altered for design improvement without prior notice.

OPTIONS

ACCESSORIES

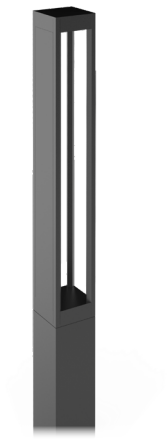

BLC
Blockout shield available on up to three sides.

LVR
Glare control louvers.

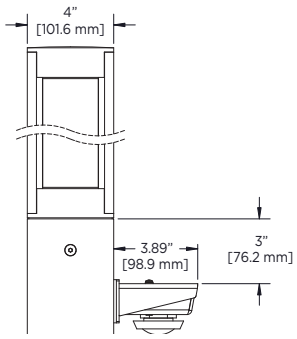

MSD
Motion sensor device (high/low 25%).
255° coverage.
Installed at 180° from hand hole.
120/277VAC, 50/60Hz
(or 230VAC, 50Hz).

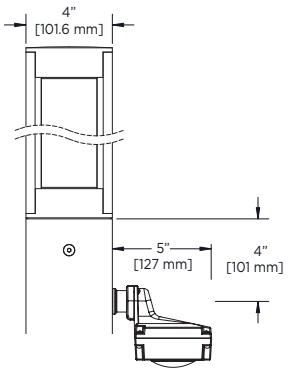

NLTAIR2
nLight AIR 2.0 motion sensor module mounted on pole.
270° coverage.
Installed at 180° from hand hole.

MOUNTING INFORMATION

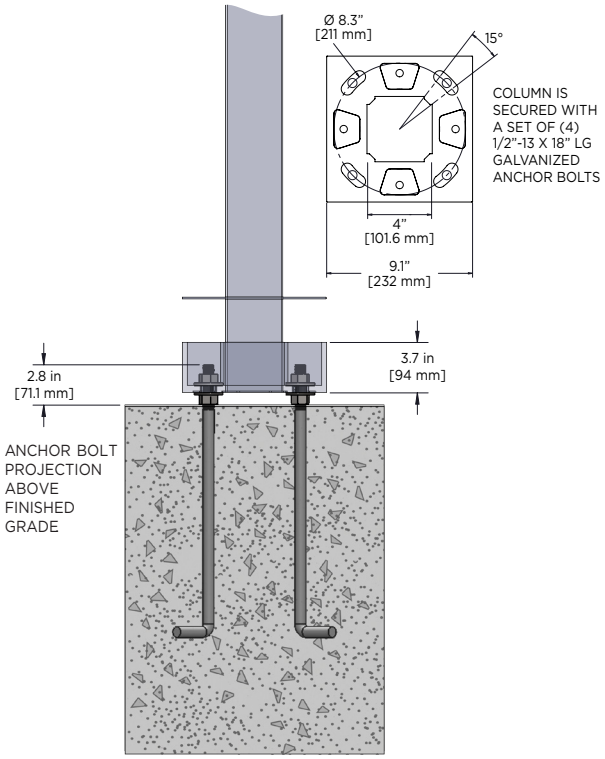

LUMINIS | Toll free: 866.586.4647 Fax: 514.683.8872 Email: info@luminis.com
260 Labrosse, Pointe-Claire (QC) Canada H9R 5L5

Luminaires may be altered for design improvement without prior notice.

L7

WDGE1 LED
Architectural Wall Sconce

Buy American

Catalog Number

Notes

Type

Hit the Tab key or mouse over the page to see all interactive elements.

Specifications

Depth (D1):	5.5"
Depth (D2):	1.5"
Height:	8"
Width:	9"
Weight: (without options)	9 lbs

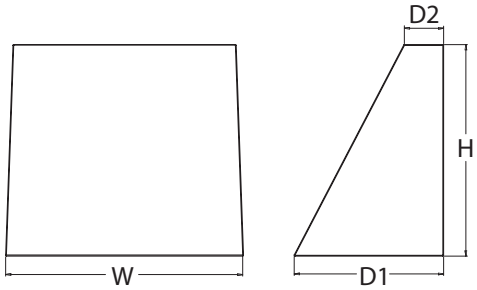

Introduction

The WDGE LED family is designed to meet specifier's every wall-mounted lighting need in a widely accepted shape that blends with any architecture. The clean rectilinear design comes in four sizes with lumen packages ranging from 1,200 to 25,000 lumens, providing true site-wide solution.

WDGE1 delivers up to 2,000 lumens with a soft, non-pixelated light source, creating a visually comfortable environment. The compact size of WDGE1, with its integrated emergency battery backup option, makes it an ideal over-the-door wall-mounted lighting solution.

WDGE LED Family Overview

Luminaire	Standard EM, 0°C	Cold EM, -20°C	Sensor	Lumens (4000K)					
				P1	P2	P3	P4	P5	P6
WDGE1 LED	4W	--	--	1,200	2,000	--	--	--	--
WDGE2 LED	10W	18W	Standalone / nLight	1,200	2,000	3,000	4,500	6,000	--
WDGE3 LED	15W	18W	Standalone / nLight	7,500	8,500	10,000	12,000	--	--
WDGE4 LED	--	--	Standalone / nLight	12,000	16,000	18,000	20,000	22,000	25,000

Ordering Information

EXAMPLE: WDGE1 LED P2 40K 80CRI VF MVOLT SRM PE DDBXD

Series	Package	Color Temperature	CRI	Distribution	Voltage	Mounting
WDGE1 LED	P1 P2	27K 2700K 30K 3000K 35K 3500K 40K 4000K 50K[1] 5000K	80CRI 90CRI	VF Visual comfort forward throw VW Visual comfort wide	MVOLT 347[2]	**Shipped included** SRM Surface mounting bracket ICW Indirect Canopy/Ceiling Washer bracket (dry/damp locations only)[5] **Shipped separately** AWS 3/8inch Architectural wall spacer PBBW Surface-mounted back box (top, left, right conduit entry) Use when there is no junction box available.

Options

E4WH[3]	Emergency battery backup, Certified in CA Title 20 MAEDBS (4W, 0°C min)
PE[4]	Photocell, Button Type
DS	Dual switching (comes with 2 drivers and 2 light engines; see page 3 for details)
DMG	0-10V dimming wires pulled outside fixture (for use with an external control, ordered separately)
BCE	Bottom conduit entry for back box (PBBW). Total of 4 entry points.
BAA	Buy America(n) Act Compliant

Finish

DDBXD	Dark bronze	DDBTXD	Textured dark bronze
DBLXD	Black	DBLBXD	Textured black
DNAXD	Natural aluminum	DNATXD	Textured natural aluminum
DWHXD	White	DWHGXD	Textured white
DSSXD	Sandstone	DSSTXD	Textured sandstone

Accessories

Ordered and shipped separately.

WDGEAWS DDBXD	WDGE 3/8inch Architectural Wall Spacer (specify finish)
WDGE1PBBW DDBXD U	WDGE1 surface-mounted back box (specify finish)

NOTES

1. 50K not available in 90CRI.
2. 347V not available with E4WH, DS or PE.
3. E4WH not available with PE or DS.
4. PE not available with DS.
5. Not qualified for DLC. Not available with E4WH.

© 2019-2022 Acuity Brands Lighting, Inc. All rights reserved.

Performance Data

Lumen Output

Lumen values are from photometric tests performed in accordance with IESNA LM-79-08. Data is considered to be representative of the configurations shown, within the tolerances allowed by Lighting Facts. Contact factory for performance data on any configurations not shown here.

Performance Package	System Watts	Dist. Type	27K (2700K, 80 CRI)					30K (3000K, 80 CRI)					35K (3500K, 80 CRI)					40K (4000K, 80 CRI)					50K (5000K, 80 CRI)				
			Lumens	LPW	B	U	G	Lumens	LPW	B	U	G	Lumens	LPW	B	U	G	Lumens	LPW	B	U	G	Lumens	LPW	B	U	G
P1	10W	VF	1,120	112	0	0	0	1,161	116	0	0	0	1,194	119	0	0	0	1,227	123	0	0	0	1,235	123	0	0	0
		VW	1,122	112	0	0	0	1,163	116	0	0	0	1,196	120	0	0	0	1,229	123	0	0	0	1,237	124	0	0	0
P2	15W	VF	1,806	120	1	0	0	1,872	125	1	0	0	1,925	128	1	0	0	1,978	132	1	0	0	1,992	133	1	0	0
		VW	1,809	120	1	0	0	1,876	125	1	0	0	1,929	128	1	0	0	1,982	132	1	0	0	1,996	133	1	0	0

Electrical Load

Performance Package	System Watts	Current (A)				
		120V	208V	240V	277V	347V
P1	10W	0.082	0.049	0.043	0.038	--
	13W	--	--	--	--	0.046
P2	15W	0.132	0.081	0.072	0.064	--
	18W	--	--	--	--	0.056

Lumen Multiplier for 90CRI

CCT	Multiplier
27K	0.845
30K	0.867
35K	0.845
40K	0.885
50K	0.898

Lumen Output in Emergency Mode (4000K, 80 CRI)

Option	Dist. Type	Lumens
E4WH	VF	646
	VW	647

Lumen Ambient Temperature (LAT) Multipliers

Use these factors to determine relative lumen output for average ambient temperatures from 0-40°C (32-104°F).

Ambient		Lumen Multiplier
0°C	32°F	1.03
10°C	50°F	1.02
20°C	68°F	1.01
25°C	77°F	1.00
30°C	86°F	0.99
40°C	104°F	0.98

Projected LED Lumen Maintenance

Data references the extrapolated performance projections for the platforms noted in a 25°C ambient, based on 10,000 hours of LED testing (tested per IESNA LM-80-08 and projected per IESNA TM-21-11).

To calculate LLF, use the lumen maintenance factor that corresponds to the desired number of operating hours below. For other lumen maintenance values, contact factory.

Operating Hours	0	25,000	50,000	100,000
Lumen Maintenance Factor	1.0	>0.96	>0.95	>0.91

© 2019-2022 Acuity Brands Lighting, Inc. All rights reserved.

Photometric Diagrams

To see complete photometric reports or download .ies files for this product, visit the Lithonia Lighting WDGE LED homepage. Tested in accordance with IESNA LM-79 and LM-80 standards.

LEGEND

- 0.25 fc
- 0.5 fc
- 1.0 fc
- 3.0 fc

MH = 8ft
Grid = 8ft x 8ft

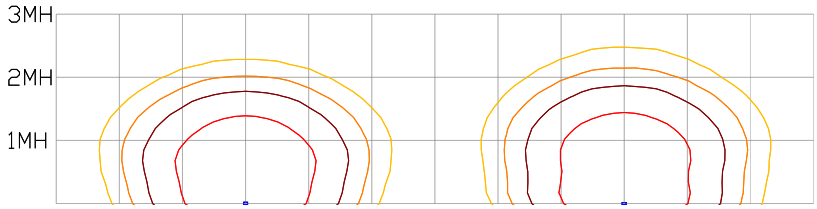

WDGE1 LED P2 40K 80CRI VW

WDGE1 LED P2 40K 80CRI VF

Emergency Egress Options

Emergency Battery Backup

The emergency battery backup is integral to the luminaire — no external housing required! This design provides reliable emergency operation while maintaining the aesthetics of the product. All emergency battery backup configurations include an independent secondary driver with an integral relay to immediately detect loss of normal power and automatically energize the luminaire. The emergency battery will power the luminaire for a minimum duration of 90 minutes (maximum duration of three hours) from the time normal power is lost and maintain a minimum of 60% of the light output at the end of 90minutes.

Applicable codes: NFPA 70/NEC – section 700.16, NFPA 101 Life Safety Code Section 7.9

The example below shows illuminance of 1 fc average and 0.1 fc minimum in emergency mode with E4WH and VF distribution.

Grid = 10ft x 10ft

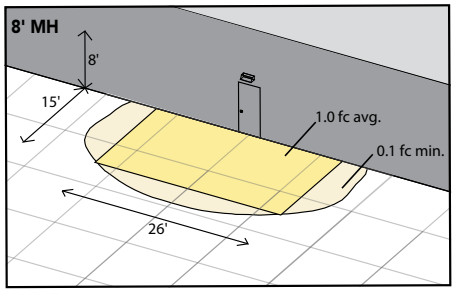

WDGE1 LED xx 40K 80CRI VF MVOLT E4WH

Dual Switching (DS) Option

The dual switching option offers operational redundancy that certain codes require. With this option the luminaire comes integrated with two drivers and two light engines. These work completely independent to each other so that a failure of any individual component does not cause the whole luminaire to go dark. This option is typically used with a back generator or inverter providing emergency power.

Applicable codes: NFPA 70/NEC – section 700.16, NFPA 101 Life Safety Code Section 7.9

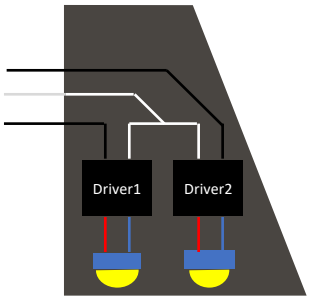

© 2019-2022 Acuity Brands Lighting, Inc. All rights reserved.

Mounting, Options & Accessories

E4WH – 4W Emergency Battery Backup

D = 5.5"

H = 8"

W = 9"

PBBW – Surface-Mounted Back Box
Use when there is no junction box available.

D = 1.75"

H = 8"

W = 9"

AWS – 3/8inch Architectural Wall Spacer

D = 0.38"

H = 4.4"

W = 7.5"

FEATURES & SPECIFICATIONS

INTENDED USE
Common architectural look, with clean rectilinear shape, of the WDGE LED was designed to blend with any type of construction, whether it be tilt-up, frame or brick. Applications include commercial offices, warehouses, hospitals, schools, malls, restaurants, and other commercial buildings.

CONSTRUCTION
The single-piece die-cast aluminum housing integrates secondary heat sinks to optimize thermal transfer from the internal light engine heat sinks and promote long life. The driver is mounted in direct contact with the casting for a low operating temperature and long life. The die-cast door frame is fully gasketed with a one-piece solid silicone gasket to keep out moisture and dust, providing an IP66 rating for the luminaire.

FINISH
Exterior painted parts are protected by a zinc-infused Super Durable TGIC thermoset powder coat finish that provides superior resistance to corrosion and weathering. A tightly controlled multi-stage process ensures a 3 mils thickness for a finish that can withstand extreme climate changes without cracking or peeling. Standard Super Durable colors include dark bronze, black, natural aluminum, sandstone and white. Available in textured and non-textured finishes.

OPTICS
Well crafted reflector optics allow the light engine to be recessed within the luminaire, providing visual comfort, superior distribution, uniformity, and spacing in wall-mount applications. The WDGE LED has zero uplight and qualifies as a Nighttime Friendly™ product, meaning it is consistent with the LEED® and Green Globes™ criteria for eliminating wasteful uplight.

ELECTRICAL
Light engine consists of high-efficacy LEDs mounted to metal-core circuit boards to maximize heat dissipation and promote long life (up to L91/100,000 hours at 25°C). The electronic driver has a power factor of >90%, THD <20%. Luminaire comes with built in 6kV surge protection, which meets a minimum Category C low exposure (per ANSI/IEEE C62.41.2). Fixture ships standard with 0-10v dimmable driver.

INSTALLATION
A universal mounting plate with integral mounting support arms allows the fixture to hinge down for easy access while making wiring connections. The 3/8" Architectural Wall Spacer (AWS) can be used to create a floating appearance or to accommodate small imperfections in the wall surface. The ICW option can be used to mount the luminaire inverted for indirect lighting in dry and damp locations. Design can withstand up to a 1.5 G vibration load rating per ANSI C136.31.

LISTINGS
CSA certified to U.S. and Canadian standards. Luminaire is IP66 rated. PIR options are rated for wet location. Rated for -40°C minimum ambient. DesignLights Consortium® (DLC) Premium qualified product and DLC qualified product. Not all versions of this product may be DLC Premium qualified or DLC qualified. Please check the DLC Qualified Products List at www.designlights.org/QPL to confirm which versions are qualified. International Dark-Sky Association (IDA) Fixture Seal of Approval (FSA) is available for all products on this page utilizing 2700K and 3000K color temperature only and SRM mounting only.

BUY AMERICAN
Product with the BAA option is assembled in the USA and meets the Buy America(n) government procurement requirements under FAR, DFARS and DOT. Please refer to www.acuitybrands.com/buy-american for additional information.

WARRANTY
5-year limited warranty. This is the only warranty provided and no other statements in this specification sheet create any warranty of any kind. All other express and implied warranties are disclaimed. Complete warranty terms located at:
www.acuitybrands.com/support/warranty/terms-and-conditions

Note: Actual performance may differ as a result of end-user environment and application. All values are design or typical values, measured under laboratory conditions at 25 °C. Specifications subject to change without notice.

© 2019-2022 Acuity Brands Lighting, Inc. All rights reserved.