From: Anais Moody
To: Christina Moon
Cc: Harold Sandel; Sterling Massey
Subject: RE: [External] RE: Building permit submittal - DA01789B-TX09257-A City of Stephenville
Date: Tuesday, March 1, 2022 3:53:43 PM
Attachments: image009.png

Hi Christina,

We are planning to use the existing tower, but in order to fit the antennas, T-Mobile is looking to increase the tower height from 70 to 80'.

There is an existing carrier (AT&T) at the 67' height, which is where the AT&T antennas are currently mounted, but for this new project TMobile is looking to mount their antennas higher than those AT&T ones.

Would we be able to do that at the 80' or what would the next steps be?

Thank you for your help and sorry for the delay in responding, just wanted to help get clarification for you!

Anais Moody
SDS Specialist I

SBA Communications Corporation
2812 N. Norwalk Street
Suite 121
Mesa, AZ 85215

480.208.6534 + **T**
AMoody@sbasite.com
-
Your Signal Starts Here.

From: Christina Moon <cmoon@stephenvilletx.gov>
Sent: Tuesday, February 22, 2022 8:25 AM
To: Anais Moody <AMoody@sbasite.com>
Cc: Harold Sandel <HSandel@stephenvilletx.gov>
Subject: RE: [External] RE: Building permit submittal - DA01789B-TX09257-A City of Stephenville

Good morning,
Thank you for sending the lease and permit information.

I'm looking for clarification on existing and proposed tower heights. **Is the current height 67', 70' or 80'?** Stephenville ordinance for Industrial zone states a height limit of 75' - Refer Sec.154.06.6. D. **Is the current tower going to be removed and a new tower installed?**

The 2006 permit is for 70' height. The structural analysis report, page 3, states existing elevation is 67' and proposed elevation is 80'.

Existing Antennas, Mounts and Transmission Lines

The table below summarizes the antennas, mounts and transmission lines that were considered in the analysis as existing on the tower.

Items	Elevation (ft)	Qty.	Antenna Descriptions	Mount Type & Qty.	Transmission Lines	Owner
1	67.0	6	Commscope SBNHH-1D65B - Panel	Platform w/ Hand Rails w/ Reinforcement Kit (Site Pro1 PRK-1245) & Reinforcement Kit (SitePro1 PRK-SFS)	(6) 1 5/8" Coax; (1) 3/8" RET Line; (7) 7/8" DC Power; (3) 1/2" Fiber	AT&T
2		6	Commscope JAHH-65B-R3B - Panel			
3		6	Andrew ETD819G-12UB TMA's			
4		3	Ericsson RRUS-32 B66 RRU's			
5		3	Ericsson RRUS 32 RRU's			
6		3	Ericsson RRUS 11 RRU's			
7		3	Ericsson RRUS 4478 B14 RRU's			
8		3	Ericsson RRUS 4478 B5 RRU's			
9		3	Ericsson RRUS 4415 B25 RRU's			
10		3	Ericsson RRUS 32 B2 RRU's			
11		3	Raycap DC6-48-60-18-8F DC Surge			
12		1	Raycap DC6-48-60-18-8C DC Surge			

Proposed Carrier's Final Configuration of Antennas, Mounts and Transmission Lines

Information pertaining to the proposed carrier's final configuration of antennas and transmission lines was provided by SBA Communications Corp. The proposed antennas and lines are listed below.

Items	Elevation (ft)	Qty.	Antenna Descriptions	Mount Type & Qty.	Transmission Lines	Owner
13	80.0	3	Commscope FFVV-65C-R3 - Panel	Platform w/ Hand Rails (PVLPPGS 12M HR AP1)	(2) 1.55" Hybrid	T-Mobile
14		3	Nsn AEHC - Panel			
15		3	Nokia AHFIG RRU's			
16		3	Nokia AHLOA RRU's			
17		2	Nokia HCS 2.0 Tower			

All transmission lines are considered running inside of the pole shafts. Please see the attached coax layout for the line placement considered in the analysis.

The drawings state existing 80' pole.

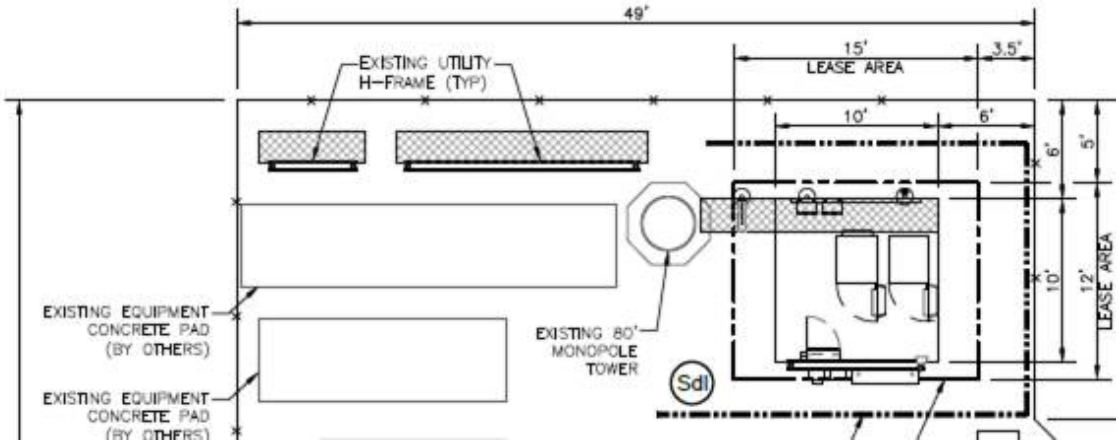

Christina Moon, RLA
City Planner

City of Stephenville - Development Services
Office (254) 918-1281

From: Anais Moody <AMoody@sbasite.com>
Sent: Friday, February 18, 2022 6:16 PM
To: Christina Moon <cmoon@stephenvilletx.gov>
Cc: Harold Sandel <HSandel@stephenvilletx.gov>; Sterling Massey <SMassey@sbasite.com>
Subject: RE: [External] RE: Building permit submittal - DA01789B-TX09257-A City of Stephenville

Hi Christina,

Yes, here is a copy of the ground lease and past zoning documentation if that helps.

Let me know if there is anything else you need.

Thanks!

Anais Moody
SDS Specialist I

SBA Communications Corporation
2812 N. Norwalk Street
Suite 121
Mesa, AZ 85215

480.208.6534 + **T**
AMoody@sbasite.com

Your Signal Starts Here.

From: Christina Moon <cmoon@stephenvilletx.gov>
Sent: Friday, February 18, 2022 12:26 PM
To: Anais Moody <AMoody@sbasite.com>
Cc: Harold Sandel <HSandel@stephenvilletx.gov>
Subject: RE: [External] RE: Building permit submittal - DA01789B-TX09257-A City of Stephenville

Good afternoon,
I'm verifying if there is a need to request a variance as 80' is over the maximum allowable height. Can you send a copy of the lease?

Christina Moon, RLA
City Planner
City of Stephenville - Development Services

Office (254) 918-1281

From: Anais Moody <AMoody@sbasite.com>
Sent: Thursday, February 17, 2022 1:45 PM
To: Christina Moon <cmoon@stephenvilletx.gov>
Cc: Heather Misemer <HMisemer@stephenvilletx.gov>
Subject: FW: [External] RE: Building permit submittal - DA01789B-TX09257-A City of Stephenville

Hi Christina,

I was told by Heather below to send you the attachments for zoning approval first…can you please let me know the process and ETA? And any other documents/payments you need from me at this time?

Thank you!

Anais Moody
SDS Specialist I

SBA Communications Corporation
2812 N. Norwalk Street
Suite 121
Mesa, AZ 85215

480.208.6534 + **T**
AMoody@sbasite.com

_
Your Signal Starts Here.

From: Heather Misemer <HMisemer@stephenvilletx.gov>
Sent: Thursday, February 17, 2022 12:12 PM
To: Anais Moody <AMoody@sbasite.com>
Subject: [External] RE: Building permit submittal - DA01789B-TX09257-A City of Stephenville

Good afternoon,
I apologize for the late response, I just wanted to inform you that our inspectors and zoning specialist need to go over the plans and zoning requirements for the cell tower before we move along in the permit process. Once we get more information, we will let you know! If you have any other questions, please let me know!

Thank you,

Heather Misemer
Permit Tech
Development Services

P: (254) 918-1213 |
E: hmisemer@stephenvilletx.gov

Subscribe to Meeting Notifications Here

This e-mail contains the thoughts and opinions of "Heather Misemer" and does not represent official City of Stephenville policy.
Note to elected officials: Please respond only to the sender of this message. Reply to all may result in a violation of the Texas Open Meetings Act.

From: Anais Moody <AMoody@sbasite.com>
Sent: Wednesday, February 16, 2022 3:26 PM
To: Heather Misemer <HMisemer@stephenvilletx.gov>
Subject: Building permit submittal - DA01789B-TX09257-A City of Stephenville

Hi Heather!

I would like to submit for any zoning/building permit for a TMobile project on the cell tower at 580 W Vanderbilt St., Stephenville, TX 76401. Attached are the application, plans and passing structural analysis.

Let me know anything else you need!

Can you let me know the estimated time for approval?

Thank you!