SANTAQUIN ESTATES CONSTRUCTION PLANS

SANTAQUIN, UTAH

prepared for:

FLAGSHIP HOMES
170 SOUTH INTERSTATE PLAZA SUITE 250
LEHI, UT 84043
PHONE: (801)766-2592

prepared by:

TRANE ENGINEERING
27 EAST MAIN STREET
LEHI, UT 84043
PHONE: (801) 768-4544

SHEET INDEX

SHEET NO.	SHEET NAME
1	COVER SHEET
2	UTILITY PLAN
3	GRADING & DRAINAGE PLAN
4	PP MAIN STREET
5	PP 900 EAST
6	PP 940 EAST
7	PP 980 EAST
8	PP 50 SOUTH & 200 SOUTH
9	PP 150 SOUTH
PLAT	PRELIMINARY PLAT

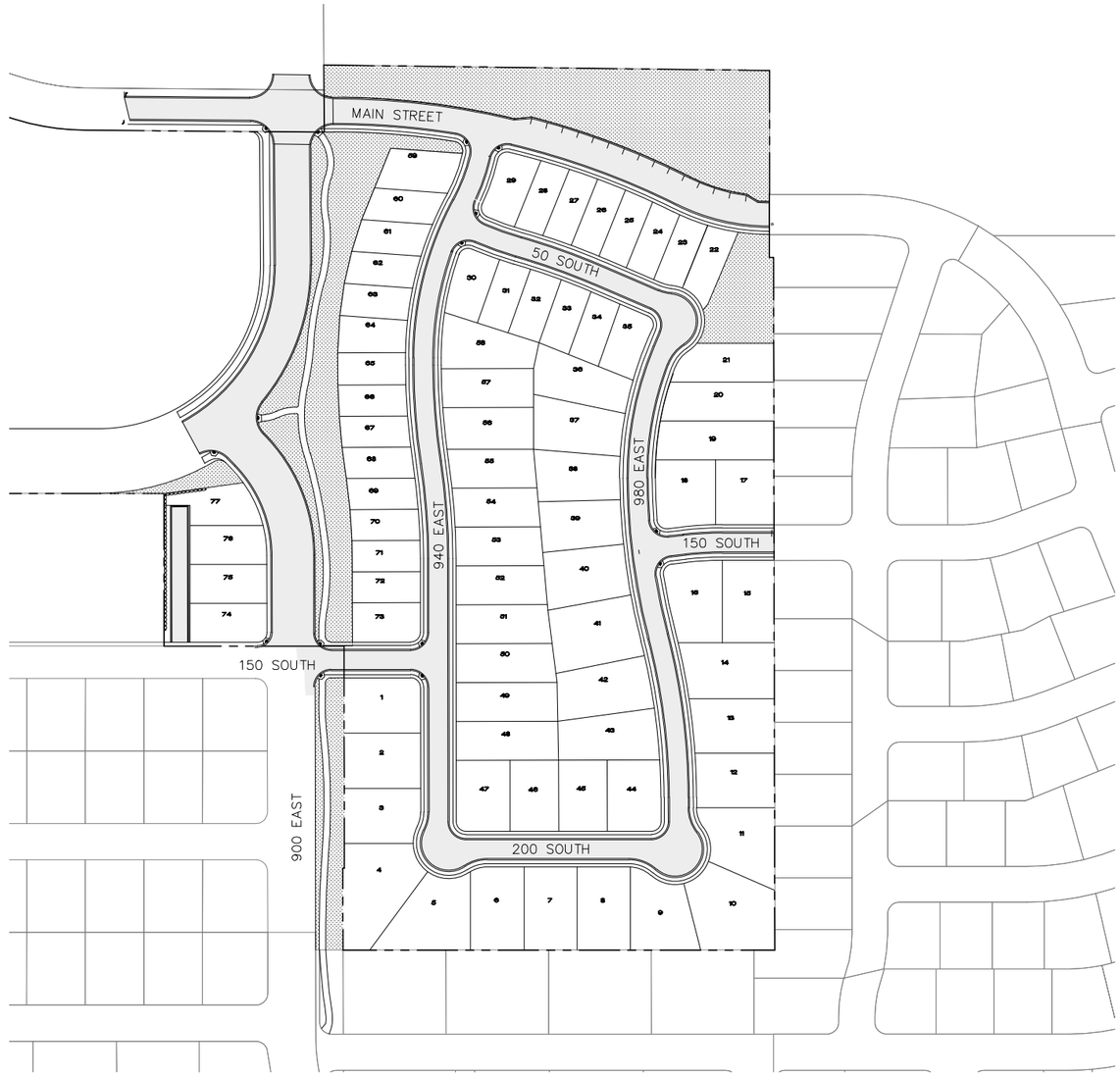

LAND USE:	
PLAT "A" =	30.86 ACRES
ZONING=	C-1, R-10 (PUD)
TOTAL LOTS=	77 LOTS
ACREAGE IN LOTS=	15.15 ACRES
ACREAGE IN ROW=	8.11 ACRES
OPEN SPACE DEDICATION=	3.50 ACRES
ACREAGE COMMERCIAL=	5.42 ACRES
DENSITY OVERALL =	2.43 LOTS/ACRE

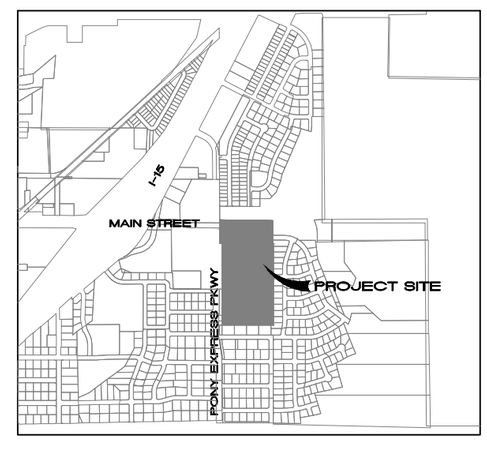

VICINITY MAP

GENERAL NOTES:

General Construction Notes:
1. All culinary mainline piping shall be placed with a minimum of 4'-0"cover over the top of the pipe. PI mainline is a minimum of 24" of cover over the top of the pipe. Gas lines must meet Dominion Energy's bury requirements.
2. All new culinary water and pressurized irrigation main line pipe shall be PVC C900 DR 18 class 150 unless otherwise approved by the city.
3. Minimum of 8"in diameter culinary water and 6"in diameter pressurized irrigation for new main line pipes.
4. A minimum of 50 PSI static pressure shall be required at all points in the culinary water system within the boundaries of all new subdivisions.
5. Culinary water service meter boxes shall be located within the 6' planter strip. Meters shall be located only in landscaped areas.
6. The minimum required fire flow at the fire hydrant locations shall be 1500 GPM.
7. When required, pressure reducing valve vaults (PRV) shall be located as directed by the City or City Engineer. The City or City Engineer shall provide the contractor with the appropriate downstream pressure setting.
8. Fire hydrants shall be located at all intersections. The maximum spacing between fire hydrants shall not exceed 500'measured along a public right-of-way.
9. Only City personnel shall open and close city water valves, unless otherwise approved in writing by the City.
10. All water samples for culinary water testing shall be collected and delivered by City personnel. The contractor shall pay for the testing expense.
11. Tapping into water lines shall not be allowed in groundwater or mud.
12. All culinary water mainline valves must be attached to the fixture within the intersection and pressurized irrigation mainline valves shall be located in line with corner lot property lines.
13. All mainline sewer piping sizes 8"to 15"shall be PVC and shall be supplied in lengths no longer than 13'. Main line pipe sizes 18"and larger shall be reinforced concrete pipe.
14. All sewer service laterals taps on existing lines shall be "inserta-tee-type"connections.
15. The contractor shall provide, install, and maintain all road construction, barricades, channeling devices, and construction signs in accordance with the Manual of Uniform Traffic Control Devices (MUTCD) for road construction activities.
16. Traffic access shall be maintained for local residents to properties along construction boundaries.
17. Work performed with the State Highway rights-of-way shall conform to State of Utah specifications for excavation on State Highway prepared by the Department of Transportation.
18. All debris resulting from work on the project shall be disposed of by the contractor. The contractor shall make appropriate arrangements for disposal sites at which debris may be lawfully disposed.
19. No open burning of construction debris shall be allowed.
20. The contractor shall provide mailboxes and posts according to US Postal Service standards and shall place them in the planter strips at locations designated by USPS and the City.

NOTE

1. The developer and the general contractor understand that it is his/her responsibility to ensure that all improvements installed within this development are constructed in full compliance with all state and Santaquin City codes, ordinances and standards. These plans are not all inclusive of all minimum codes, ordinances and standards. This fact does not relieve the developer or general contractor from the full compliance with all minimum state and Santaquin City codes, ordinances and standards.
2. All recommendations made in a pertinent geotechnical report/study shall be followed explicitly during construction of building and site improvements

BENCHMARK

EAST QUARTER CORNER OF SECTION 2, TOWNSHIP 9S, RANGE 2E
ELEVATION = 4577.63

811 Know what's below. Call before you dig.

SITE MAP
NTS

REGISTERED PROFESSIONAL ENGINEER # 362346 TONY G. TRANE STATE OF UTAH

REVISIONS			
NO.	DATE	DESCRIPTION	BY
1			
2			
3			
4			

J:\FLAGSHIP\HARMONY\dwg\01_COVER.dwg

DESIGNED BY: TGT
DRAWN BY: TT
CHECK BY: TGT
DATE: 2/1/22
CDGD FILE:

TRANE ENGINEERING, P.C.
CONSULTING ENGINEERS AND LAND SURVEYORS
27 EAST MAIN LEHI, UTAH 84043 (801) 768-4544

SANTAQUIN, UTAH

SANTAQUIN ESTATES
A RESIDENTIAL SUBDIVISION

COVER SHEET

JOB
FS HARMONY

SHEET NO.
1

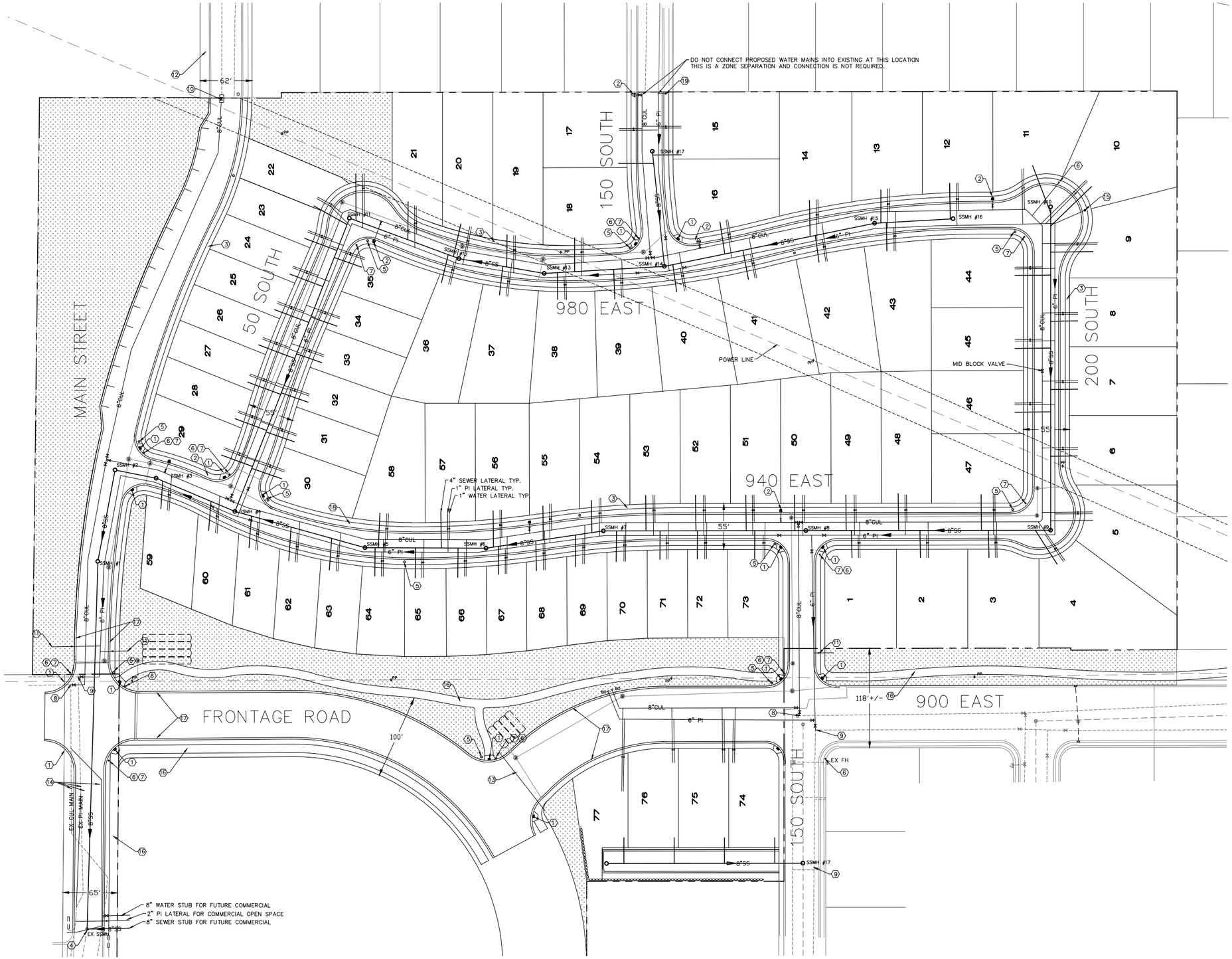

KEYED NOTES

1. CONSTRUCT ADA RAMP AS PER SANTAQUIN CITY STANDARDS
2. INSTALL FIRE HYDRANT AS PER SANTAQUIN CITY STANDARDS
3. CONSTRUCT 5' CONCRETE SIDEWALK
4. CONNECT INTO EXISTING SEWER. CONTRACTOR TO VERIFY SIZE, INVERT ELEVATION AND LOCATION.
5. INSTALL STREETLIGHT'S PER SANTAQUIN CITY STANDARDS
6. STOP SIGN AS PER SANTAQUIN CITY STANDARDS
7. STREET SIGN AS PER SANTAQUIN CITY STANDARDS
8. CONNECT INTO EXISTING CULINARY LINE WITH CONSTRUCTION VALVE
9. CONNECT INTO EXISTING PRESSURE IRRIGATION LINE WITH CONSTRUCTION VALVE
10. INSTALL PRV ON CULINARY LINE FOR ZONE SEPARATION AS PER SANTAQUIN CITY STANDARDS.
11. 2" PI LATERAL FOR OPEN SPACE
12. COORDINATE SIGNAGE FOR WARNING OF ON STREET PARKING.
13. IRRIGATION CONDUIT TO PROVIDE IRRIGATION TO ADJACENT OPEN SPACE
14. EXISTING WATER MAINS ARE ANTICIPATED TO BE LOWERED. CONTRACTOR TO POTHOLE WATER LINES AND COORDINATE WITH ENGINEER AND CITY FOR WHICH PORTIONS ARE TO BE LOWERED.
15. INSTALL AIR RELIEF VALVE ON PRESSURE IRRIGATION MAIN AT HIGH POINT.
16. 10' ASPHALT TRAIL
17. PAINT CURB RED ALONG 900 EAST FROM 150 SOUTH TO THE FRONTAGE ROAD AND MAIN STREET 300' EACH DIRECTION FROM THE FRONTAGE ROAD.
18. COORDINATE WITH USPS AND CITY FOR MAILBOX LOCATION. PROVIDE APPROVAL LETTER FROM USPS.
19. INSTALL AIR VAC AT END OF PI MAIN

UTILITY NOTES

1. ALL CONSTRUCTION TO BE DONE ACCORDING TO SANTAQUIN CITY STANDARDS AND SPECIFICATIONS.
2. ALL ADA REQUIREMENTS TO BE CONSTRUCTED IN ACCORDANCE WITH SANTAQUIN CITY STANDARDS AND SPECIFICATIONS.
3. CULINARY WATER – 48" MIN. DEPTH TO TOP OF PIPE C900 PVC.
4. PRESSURE IRRIGATION 24" MIN. DEPTH TO TOP OF PIPE C900 PVC.
5. SEWER 8" SDR-35 PVC PIPE WITH MANHOLES AS NOTED.
6. WATER TEES, ELBOWS, PIPE BEDDING AND TRENCHES SHALL BE INSTALLED AS PER SANTAQUIN CITY STANDARDS.
7. ALL CULINARY VALVES ARE TO BE FLANGED TO THE TEE.

0 60 120 180

(24"x36")
SCALE: 1" = 60'
(11"x17")
SCALE: 1" = 120'

REVISIONS					
NO.	DATE	DESCRIPTION	BY	DESIGNED BY:	TGT
1	2/22/21	RED LINES	TT	DRAWN BY:	TT
2				CHECK BY:	TGT
3				DATE:	2/1/22
4				CADD FILE:	

J:\FLAGSHIP\HARMONY\dwg\02_UTILITY.dwg

TRANE ENGINEERING, P.C.
CONSULTING ENGINEERS AND LAND SURVEYORS
27 EAST MAIN LEHI, UTAH 84043 (801) 768-4544

SANTAQUIN, UTAH

SANTAQUIN ESTATES
A RESIDENTIAL SUBDIVISION

UTILITY PLAN

JOB
FS H6

SHEET NO.
2

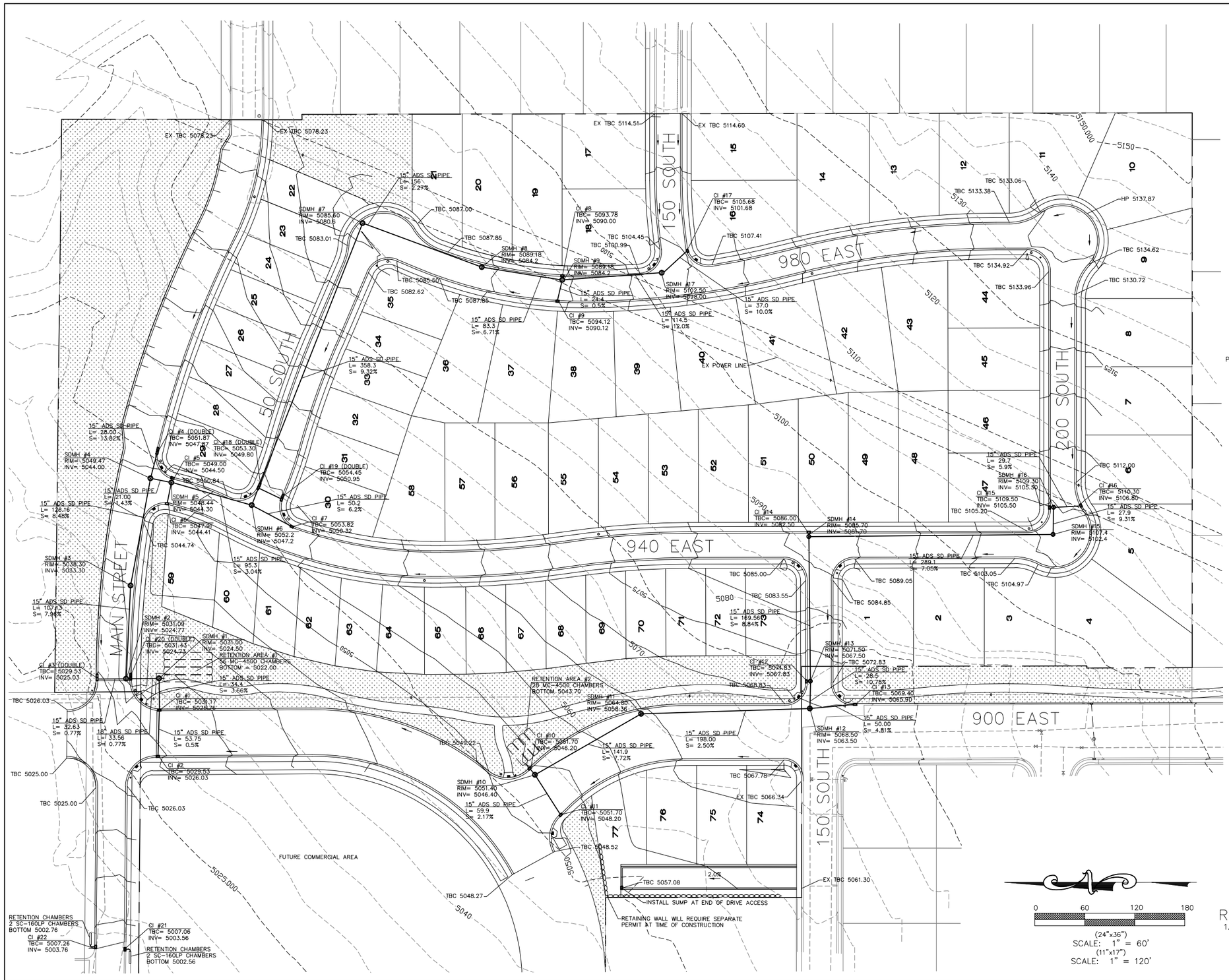

GENERAL NOTES

1. ALL CONSTRUCTION TO BE DONE ACCORDING TO SANTAQUIN CITY STANDARDS AND SPECIFICATIONS.
2. CONTRACTOR TO MEET ALL ADA REQUIREMENTS FOR THE SITE.
3. DRAINAGE FOR EACH LOT IS TO BE DIRECTED TO THE STREET. IF LOT GRADING DOES NOT ALLOW THE DRAINAGE TO FLOW TO THE STREET THEN THE PROPERTY OWNER IS RESPONSIBLE TO RETAIN RUNOFF ON OWN LOT.
4. RETENTION AREAS 1 AND 2 TO INCLUDE MC-4500 STORMTECH CHAMBERS OR EQUIVALENT OPEN VOLUME BASED ON PERCOLATION RATES AT THOSE LOCATIONS.

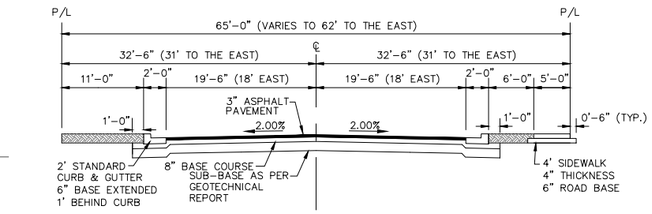

65'-62' MAIN STREET RIGHT-OF-WAY SECTION
-NTS-

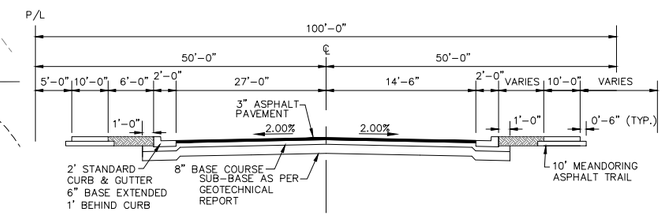

100' FRONTAGE ROAD RIGHT-OF-WAY SECTION
-NTS-

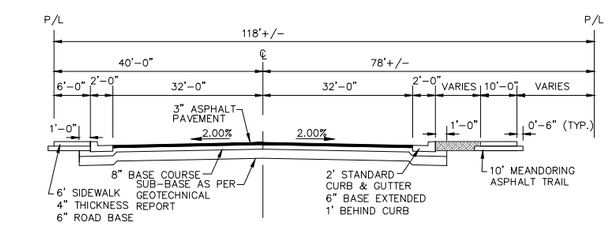

900 EAST RIGHT-OF-WAY SECTION
-NTS-

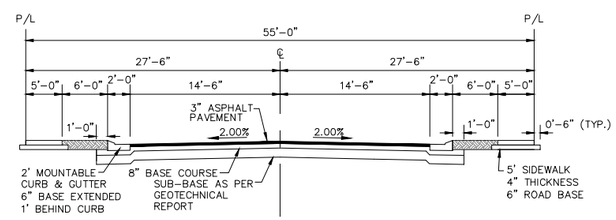

55' RIGHT-OF-WAY TYPICAL STREET SECTION
-NTS-

0 60 120 180

(24"x36")
SCALE: 1" = 60'
(11"x17")
SCALE: 1" = 120'

RETENTION AREAS

1. CONTRACTOR TO COORDINATE WITH ENGINEER ONCE SITE PREP WORK IS COMPLETE AT RETENTION AREAS TO VERIFY PERCOLATION RATES PRIOR TO INSTALLATION OF STORMTECH OR EQUIVALENT SYSTEM.

REVISIONS					
NO.	DATE	DESCRIPTION	BY	DESIGNED BY:	TGT
1				DRAWN BY:	TT
2				CHECK BY:	TGT
3				DATE:	2/1/22
4				CODD FILE:	

J:\FLAGSHIP\HARMONY\dwg\04_GRADING.dwg

TRANE ENGINEERING, P.C.
CONSULTING ENGINEERS AND LAND SURVEYORS
27 EAST MAIN LEHI, UTAH 84043 (801) 768-4544

SANTAQUIN, UTAH

SANTAQUIN ESTATES
A RESIDENTIAL SUBDIVISION

GRADING/DRAINAGE

JOB
FS HARMONY

SHEET NO.
3

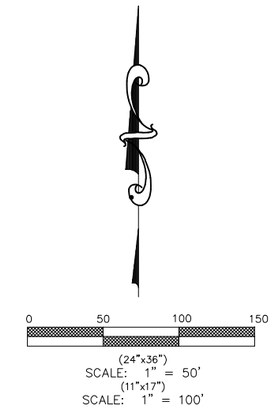

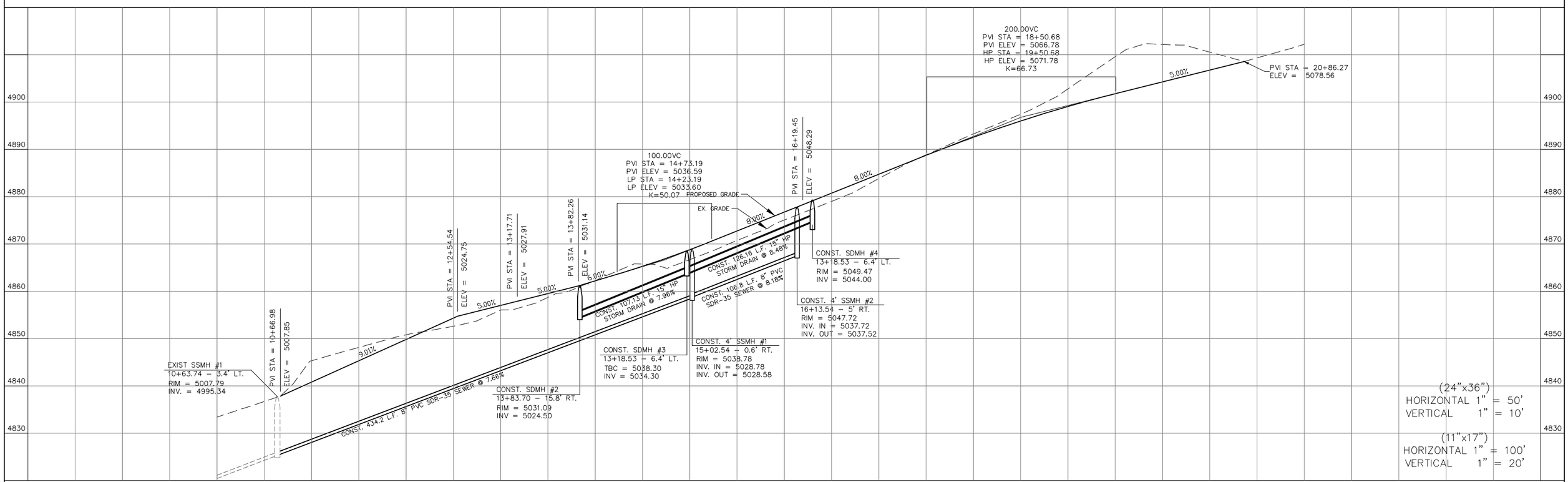

REVISIONS					
NO.	DATE	DESCRIPTION	BY	DESIGNED BY:	TGT
1				DRAWN BY:	TT
2				CHECK BY:	TGT
3				DATE:	2/1/22
4				CDGD FILE:	

J:\FLAGSHIP\HARMONY\dwg\04 PP.dwg

TRANE ENGINEERING, P.C.

CONSULTING ENGINEERS AND LAND SURVEYORS

27 EAST MAIN LEHI, UTAH 84043 (801) 768-4544

SANTAQUIN, UTAH

SANTAQUIN ESTATES

A RESIDENTIAL SUBDIVISION

PLAN AND PROFILE
MAIN STREET

JOB
FS H10

SHEET NO.
4

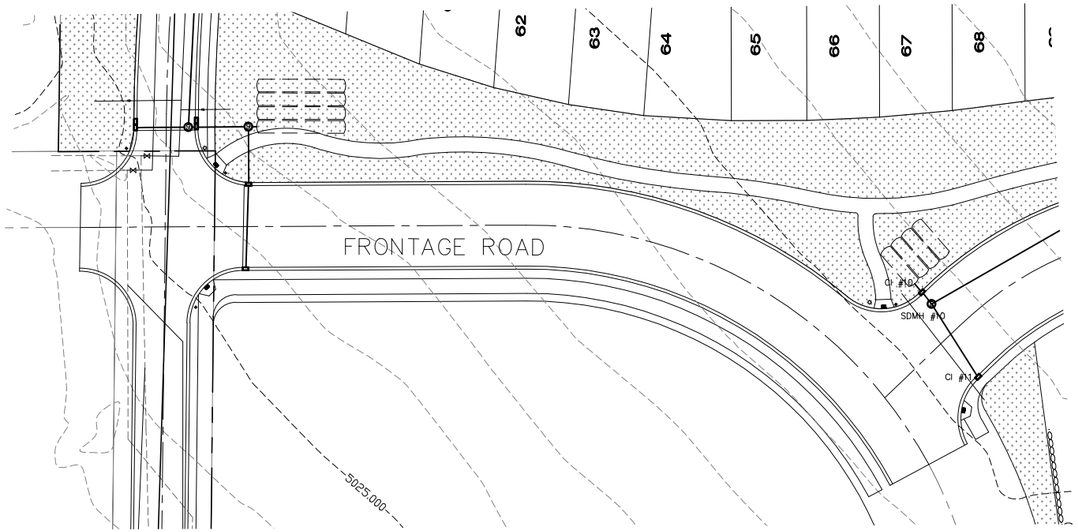

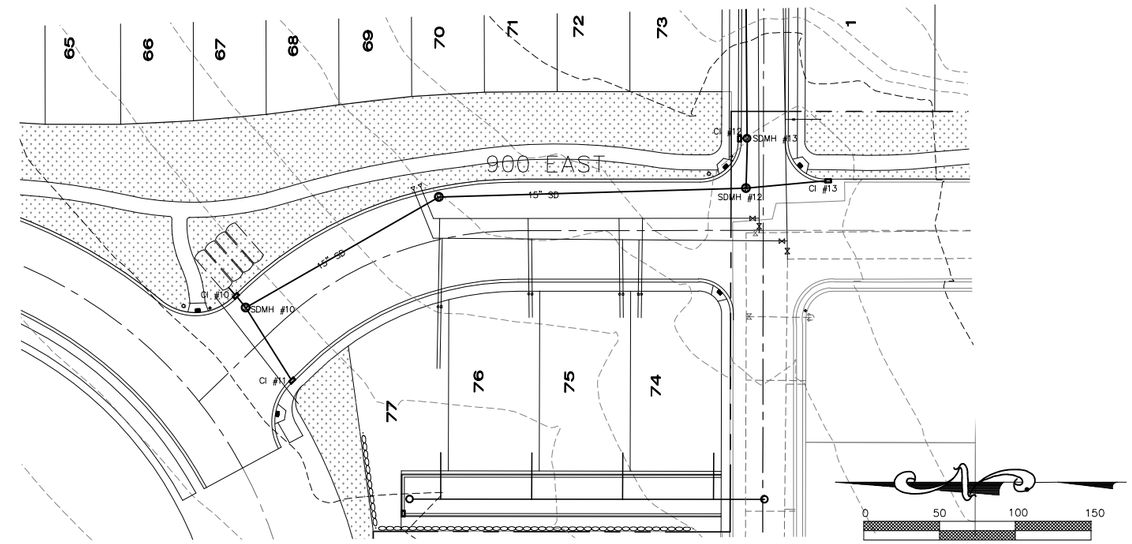

(24"x36")
SCALE: 1" = 50'
(11"x17")
SCALE: 1" = 100'

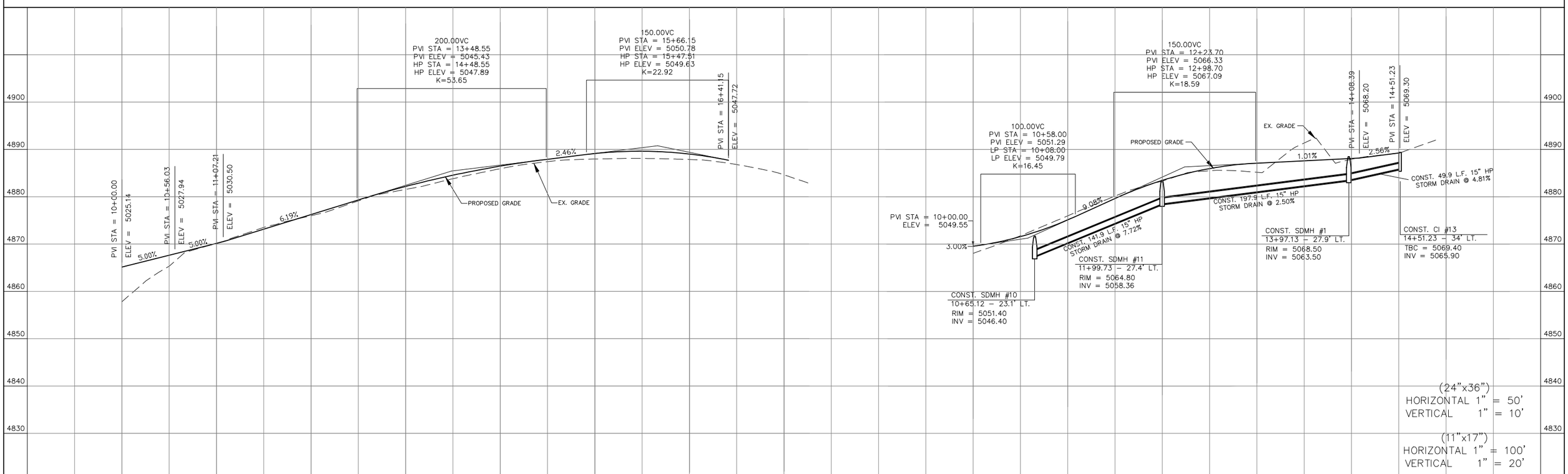

(24"x36")
HORIZONTAL 1" = 50'
VERTICAL 1" = 10'

(11"x17")
HORIZONTAL 1" = 100'
VERTICAL 1" = 20'

REVISIONS					
NO.	DATE	DESCRIPTION	BY	DESIGNED BY:	TGT
1				DRAWN BY:	TT
2				CHECK BY:	TGT
3				DATE:	2/1/22
4				COGO FILE:	

J:\FLAGSHIP\HARMONY\dwg\04 PP.dwg

TRANE ENGINEERING, P.C.
CONSULTING ENGINEERS AND LAND SURVEYORS
27 EAST MAIN LEHI, UTAH 84043 (801) 768-4544

SANTAQUIN, UTAH

SANTAQUIN ESTATES
A RESIDENTIAL SUBDIVISION

PLAN AND PROFILE
900 EAST

JOB
FS SANTAQUIN

SHEET NO.
5

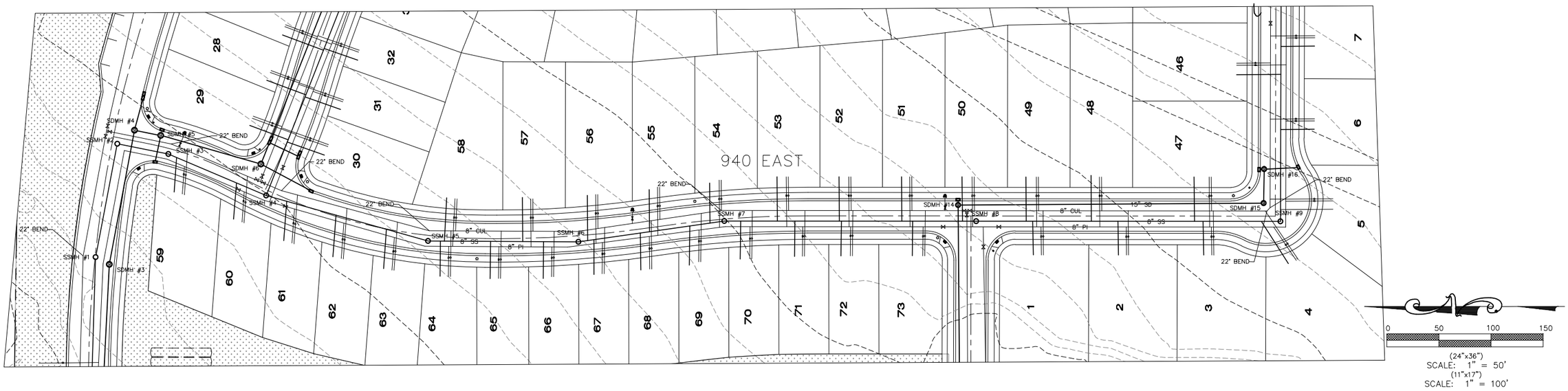

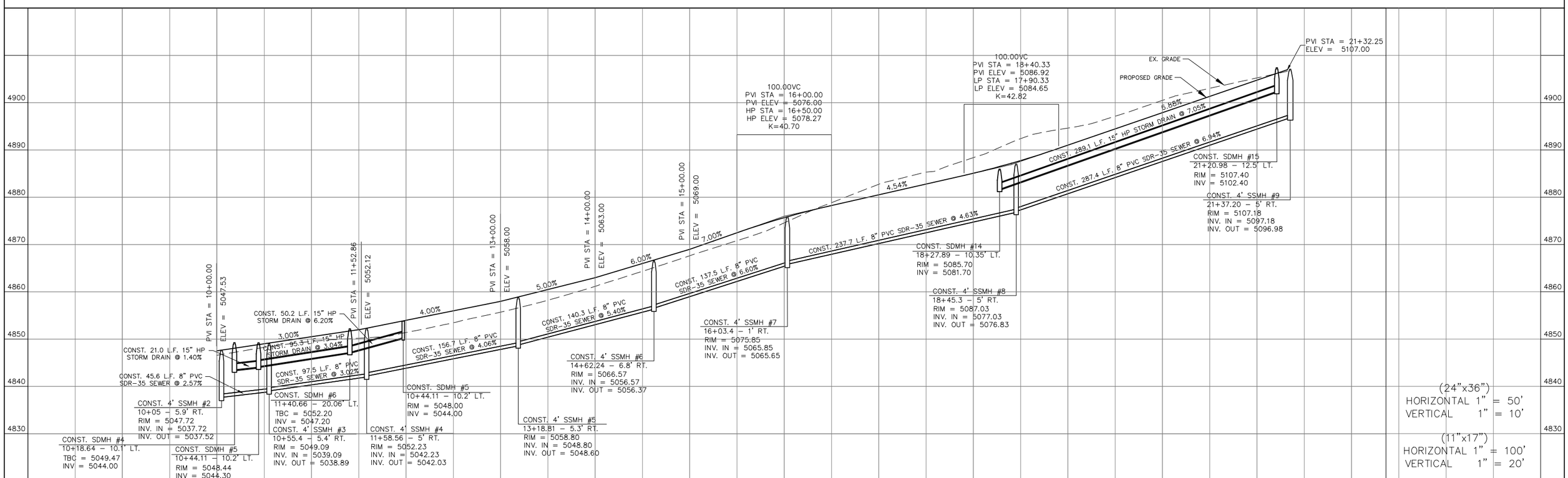

REVISIONS			
NO.	DATE	DESCRIPTION	BY
1			
2			
3			
4			

J:\FLAGSHIP\SANTAQUIN\dwg\04 PP 940 EAST.dwg

DESIGNED BY:	TGT
DRAWN BY:	TT
CHECK BY:	TGT
DATE:	2/1/22
CGGO FILE:	

TRANE ENGINEERING, P.C.

CONSULTING ENGINEERS AND LAND SURVEYORS

27 EAST MAIN LEHI, UTAH 84043 (801) 768-4544

SANTAQUIN, UTAH

SANTAQUIN ESTATES

A RESIDENTIAL SUBDIVISION

PLAN AND PROFILE
940 EAST

JOB
FS SANTAQUIN

SHEET NO.
6

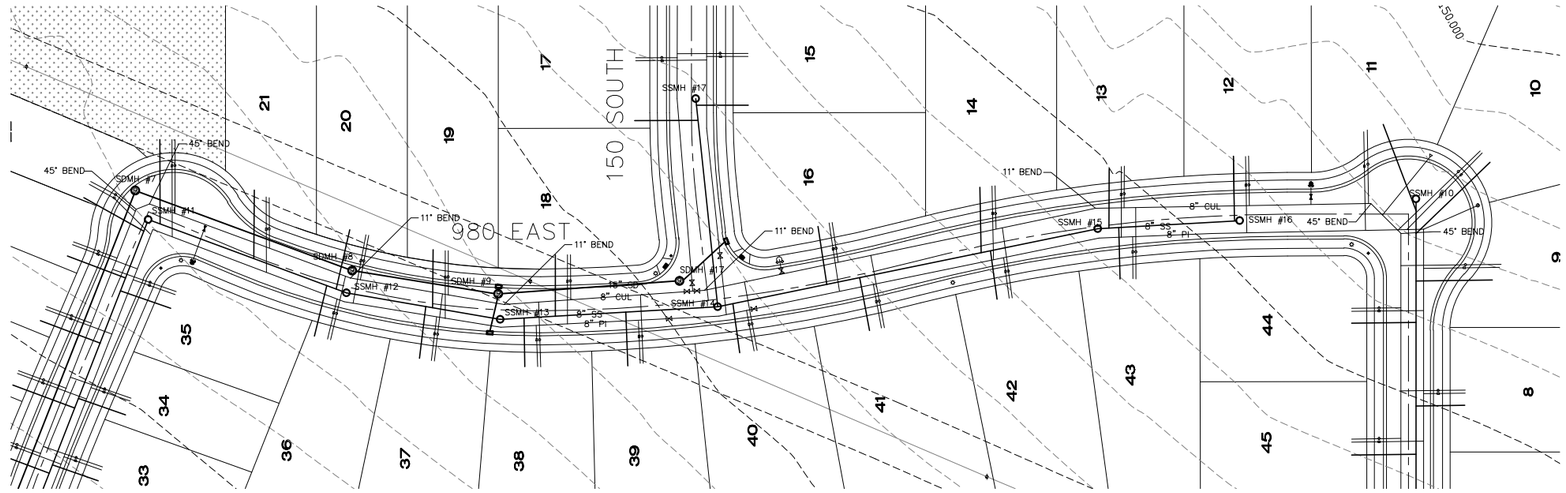

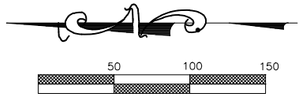

(24"x36")
SCALE: 1" = 50'
(11"x17")
SCALE: 1" = 100'

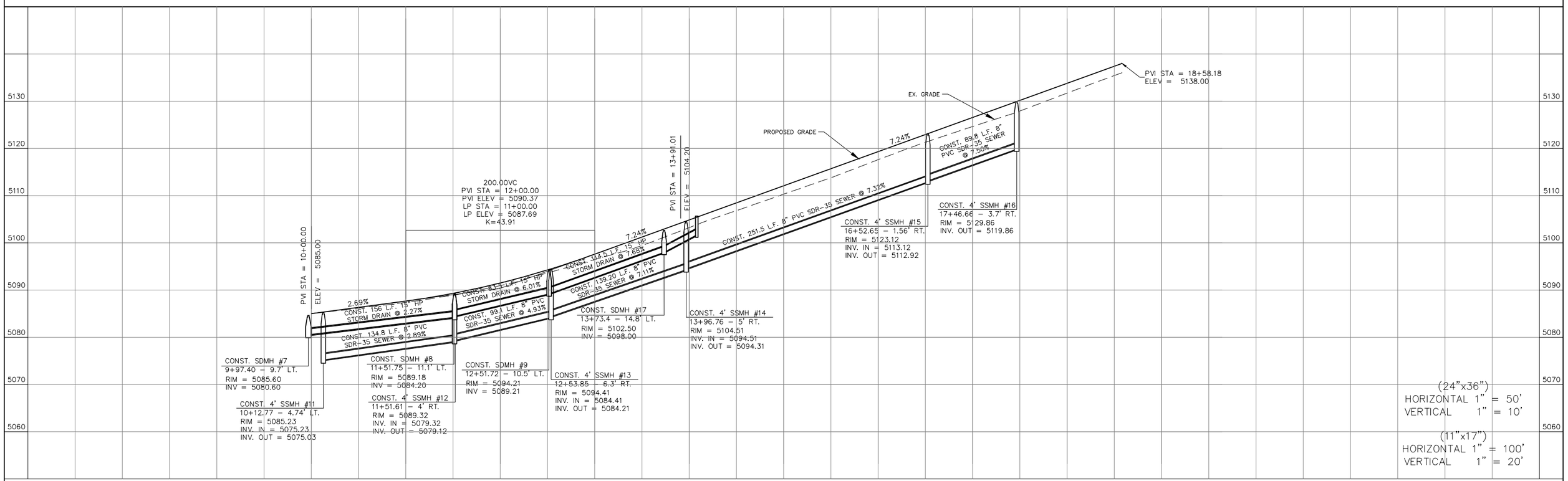

(24"x36")
HORIZONTAL 1" = 50'
VERTICAL 1" = 10'

(11"x17")
HORIZONTAL 1" = 100'
VERTICAL 1" = 20'

REVISIONS					
NO.	DATE	DESCRIPTION	BY	DESIGNED BY:	TGT
1				DRAWN BY:	TT
2				CHECK BY:	TGT
3				DATE:	2/1/22
4				COGO FILE:	

J:\FLAGSHIP\SANTAQUIN\dwg\07 PP 980 EAST.dwg

TRANE ENGINEERING, P.C.
CONSULTING ENGINEERS AND LAND SURVEYORS
27 EAST MAIN LEHI, UTAH 84043 (801) 768-4544

SANTAQUIN, UTAH

SANTAQUIN ESTATES
A RESIDENTIAL SUBDIVISION

PLAN AND PROFILE
980 EAST

JOB
FS SANTAQUIN

SHEET NO.
7

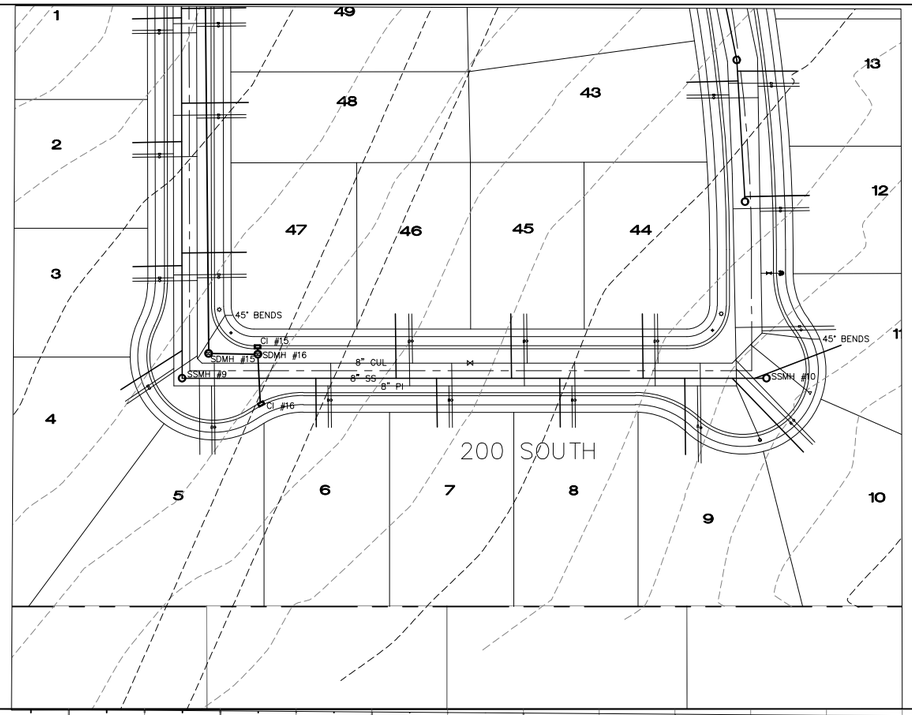

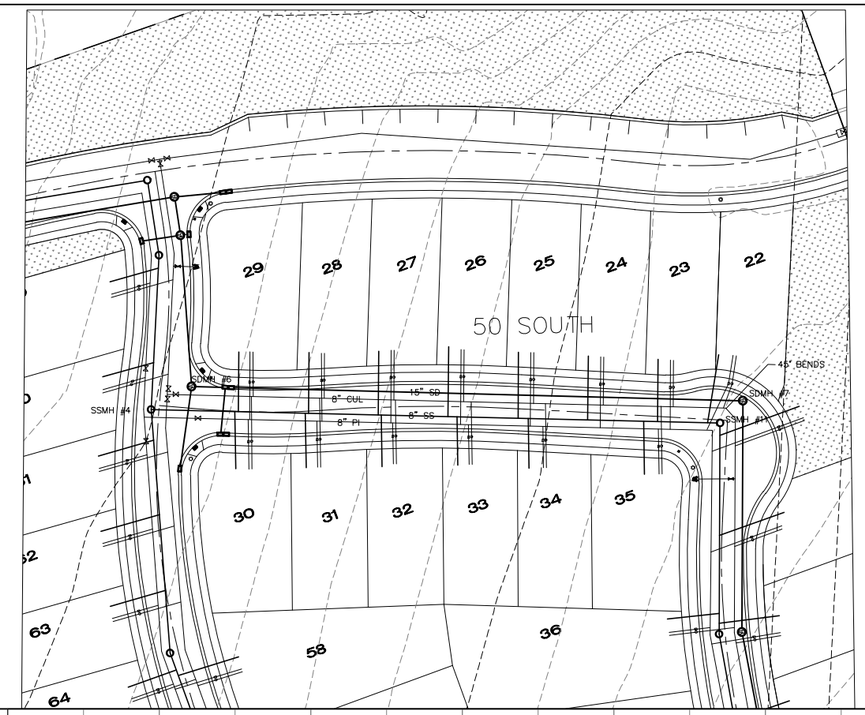

0 50 100 150

(24"x36")
SCALE: 1" = 50'
(11"x17")
SCALE: 1" = 100'

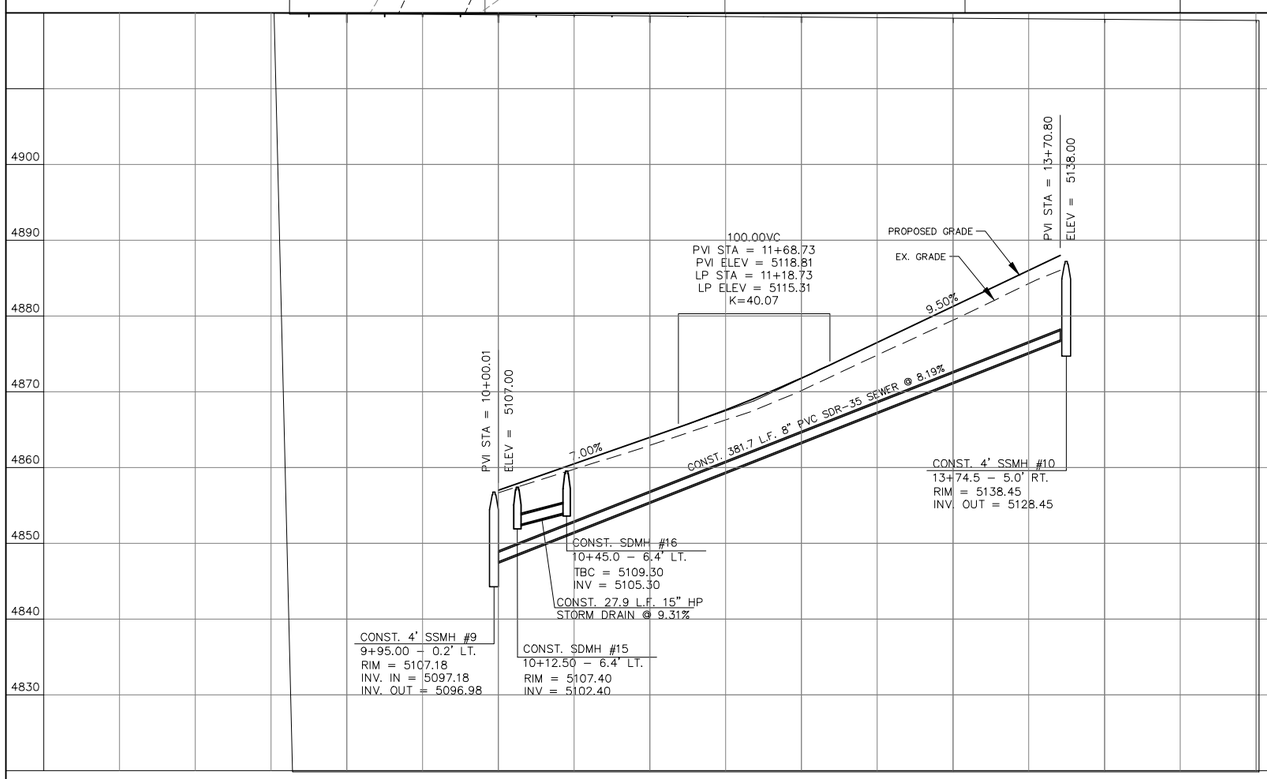

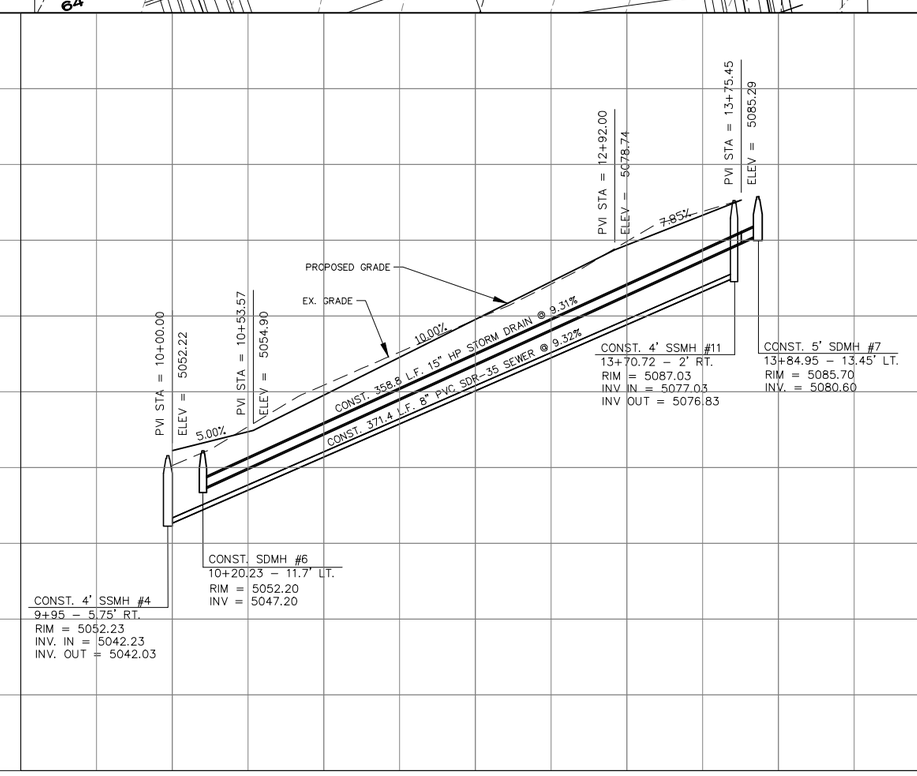

(24"x36")
HORIZONTAL 1" = 50'
VERTICAL 1" = 10'

(11"x17")
HORIZONTAL 1" = 100'
VERTICAL 1" = 20'

REVISIONS					
NO.	DATE	DESCRIPTION	BY	DESIGNED BY:	TGT
1				DRAWN BY:	TT
2				CHECK BY:	TGT
3				DATE:	2/1/22
4				COGO FILE:	

J:\FLAGSHIP\SANTAQUIN\dwg\08 PP 50 S 200 S.dwg

TRANE ENGINEERING, P.C.
CONSULTING ENGINEERS AND LAND SURVEYORS
27 EAST MAIN LEHI, UTAH 84043 (801) 768-4544

SANTAQUIN, UTAH

SANTAQUIN ESTATES
A RESIDENTIAL SUBDIVISION

PLAN AND PROFILE
200 SOUTH & 50 SOUTH

JOB
FS SANTAQUIN

SHEET NO.
8

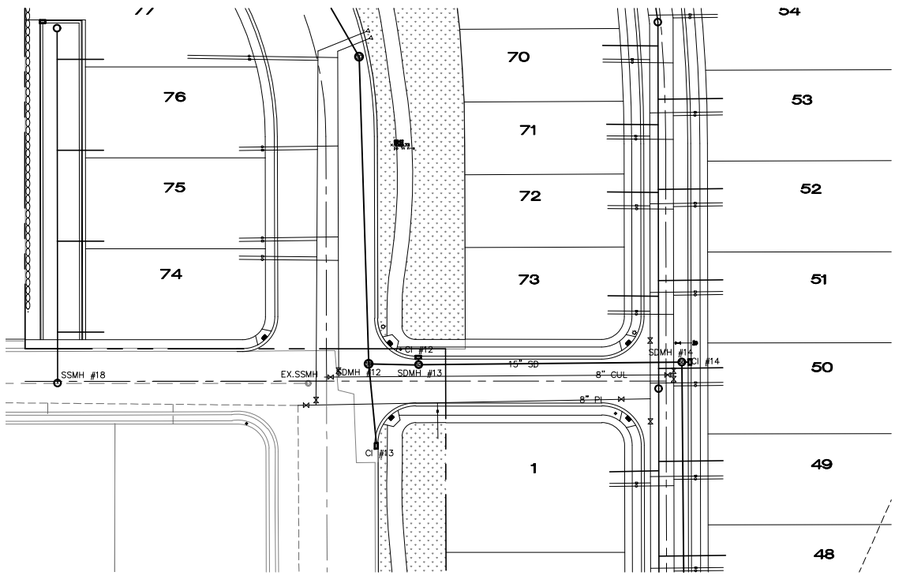

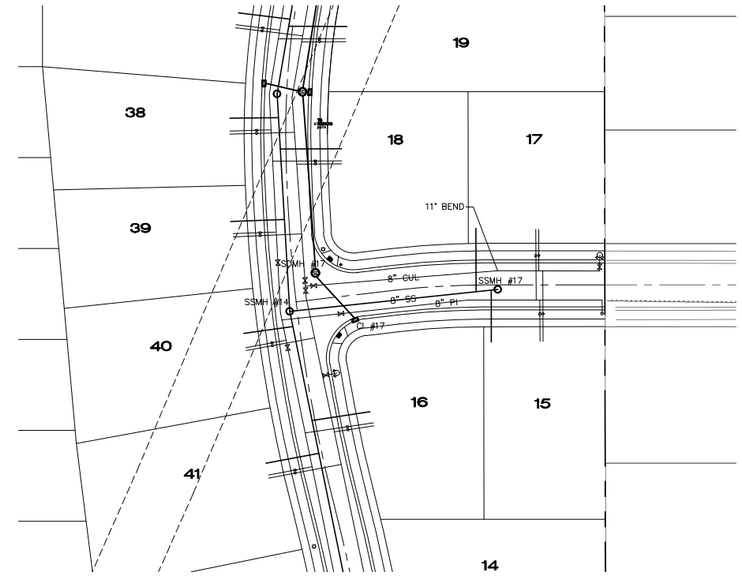

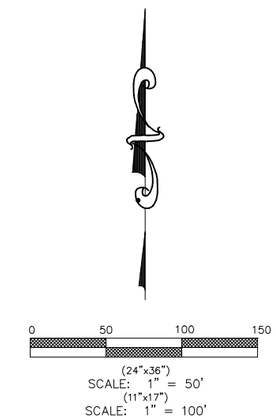

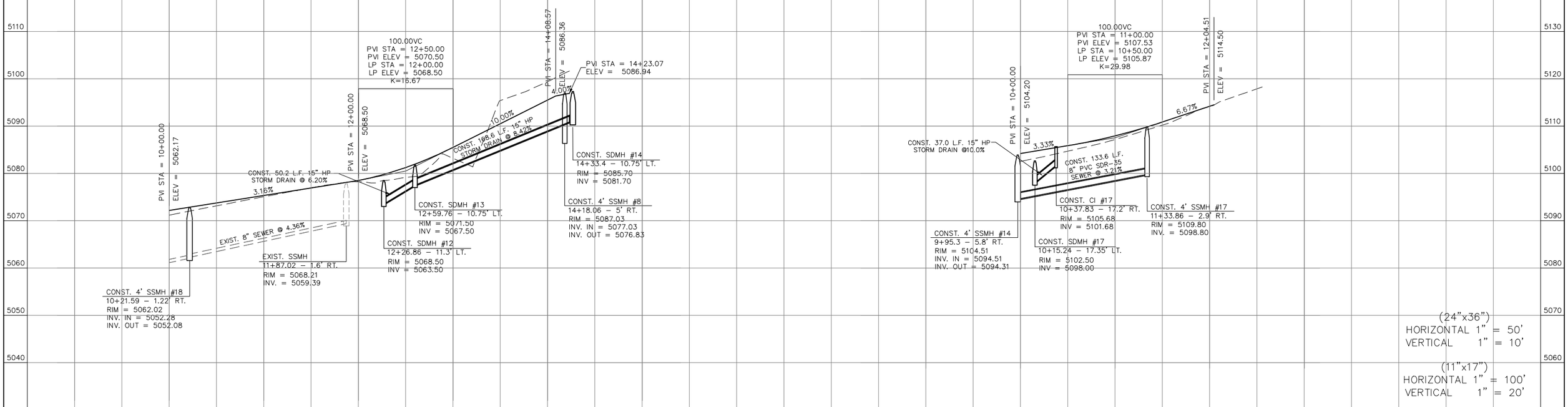

REVISIONS					
NO.	DATE	DESCRIPTION	BY	DESIGNED BY:	TGT
1				DRAWN BY:	TT
2				CHECK BY:	TGT
3				DATE:	2/1/22
4				COGO FILE:	

J:\FLAGSHIP\SANTAQUIN\dwg\09 PP 150 SOUTH.dwg

TRANE ENGINEERING, P.C.

CONSULTING ENGINEERS AND LAND SURVEYORS

27 EAST MAIN LEHI, UTAH 84043 (801) 768-4544

SANTAQUIN, UTAH

SANTAQUIN ESTATES

A RESIDENTIAL SUBDIVISION

PLAN AND PROFILE

150 SOUTH (W) & 150 SOUTH (E)

JOB FS SANTAQUIN

SHEET NO. 9

SANTAQUIN ESTATES PLAT 'A'

SITUATED IN THE SOUTHEAST QUARTER OF SECTION 1, TOWNSHIP 10 SOUTH, RANGE 1 EAST, AND THE SOUTHWEST QUARTER OF SECTION 6, TOWNSHIP 10 SOUTH, RANGE 2 EAST, SALT LAKE BASE AND MERIDIAN, SANTAQUIN, UTAH

DOMINION ENERGY

Dominion Energy approves this plat solely for the purpose of confirming that the plat contains public utility easements. Dominion Energy may require other easements in order to serve this development. this approval does not constitute abrogation or waiver of any other existing rights, obligations or liabilities provided by law or equity. This approval does not constitute acceptance, approval of acknowledgement of any terms contained in the plat, including those set forth in the Owners Dedication and the Notes and does not constitute a guarantee of particular terms of natural gas service. For further information please contact Dominion Energy's right-of-way department at 1-800-366-8532

Approved this _____ day of _____ 20 ___

Dominion Energy

By: _____ Title: _____

ROCKY MOUNTAIN POWER APPROVAL

Pursuant to Utah Code Ann 54-3-27 this plat conveys to the owner(s) or operators of utility facilities a public utility easement along with all the rights and duties described therein.

Pursuant to Utah Code Ann 17-27a-603(4)(c)(ii) Rocky Mountain Power accepts delivery of the PUE as described in this plat and approves this plat solely for the purpose of confirming that the plat

1. contains public utility easements and approximates the location of the public utility easements, but does not warrant their precise location. Rocky Mountain Power may require other easements in order to serve

2. this development. This approval does not affect any right that Rocky Mountain Power has under.
   (1). A recorded easement of right of way
   (2). The law applicable to prescriptive rights
   (3). Title 54, Chapter 8a, Damage to Underground Utility Facilities
   (4). Any other provision of law

ROCKY MOUNTAIN POWER DATE

CENTURYLINK APPROVAL

CENTURYLINK DATE

FOUND SECTION CORNER

COMMON AREA DEDICATED TO SANTAQUIN CITY

LIMITED COMMON (SHARED DRIVEWAY ACCESS, PUE)

BOUNDARY

SECTION LINE

ROAD CENTER LINE

EASEMENT LINE

BUILDING SETBACK

LAND USE:	
PLAT "A" =	30.86 ACRES
ZONING=	C-1, R-10 (PUD)
TOTAL RES. LOTS=	77 LOTS
ACREAGE IN LOTS=	15.15 ACRES
ACREAGE IN ROW=	6.79 ACRES
ACREAGE OPEN SPACE=	3.5 ACRES
ACREAGE COMMERCIAL=	5.42 ACRES
DENSITY OVERALL =	2.43 LOTS/ACRE

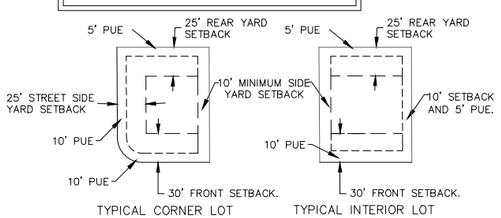

SETBACK AND EASEMENT DETAIL

LOTS 1-16,19-20,36,40-43 (10,000 SF)

-NTS-

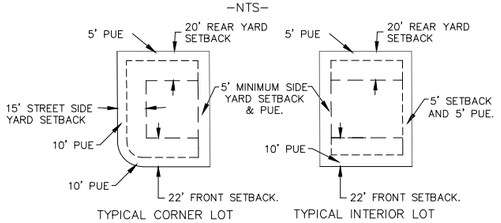

SETBACK AND EASEMENT DETAIL

LOTS 17,18,21-35,37-39,44-77 (PUD)

-NTS-

VICINITY MAP

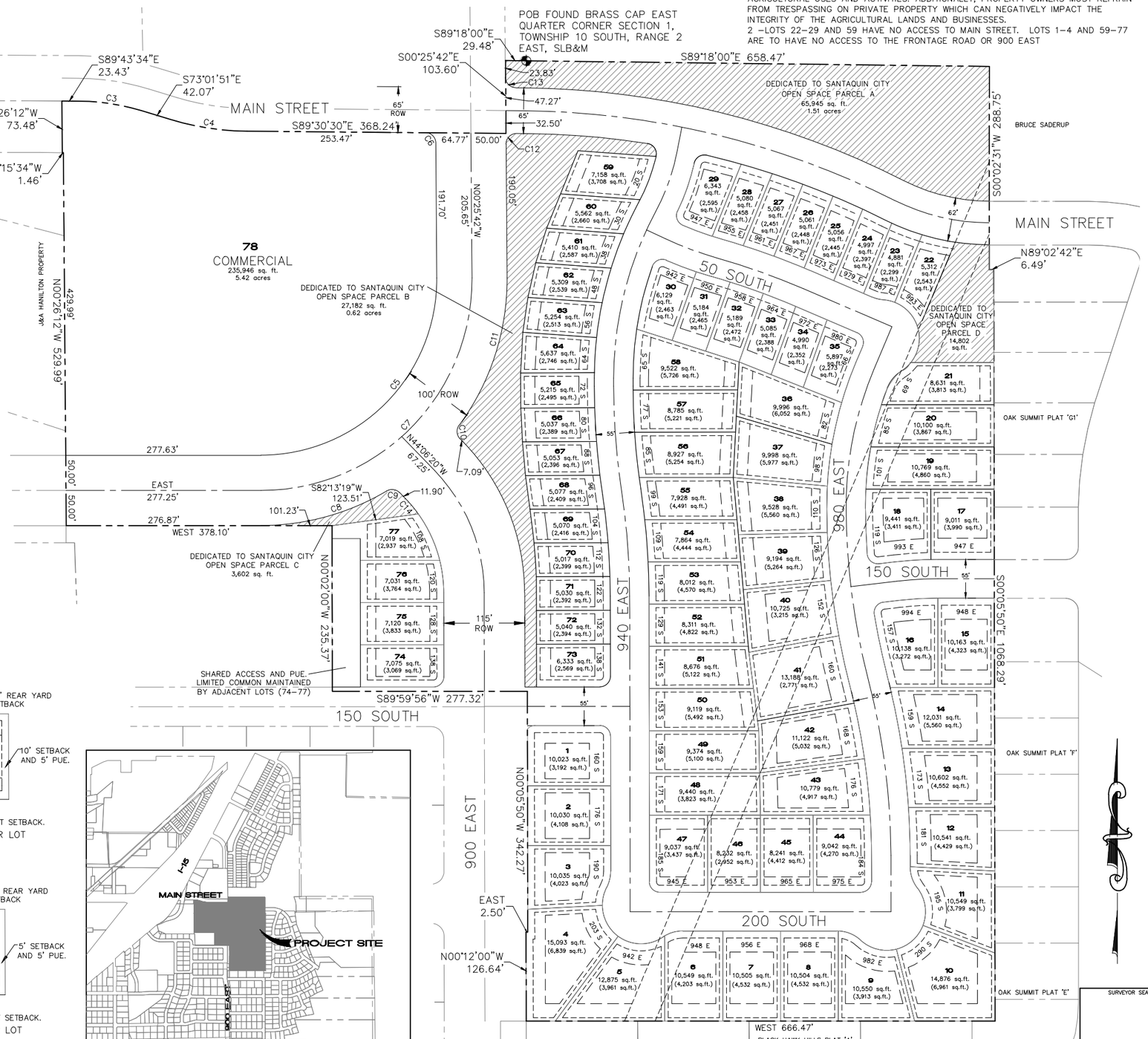

FLAGSHIP HOMES
170 SOUTH INTERSTATE PLAZA SUITE 250
LEHI, UT 84043

TRANE ENGINEERING, P.C.
CONSULTING ENGINEERS AND LAND SURVEYORS
37 EAST MAIN LEHI, UTAH 84043 (801) 768-4844

NOTES:

1- THIS PROPERTY IS LOCATED IN AN AGRICULTURAL COMMUNITY IN WHICH NORMAL AGRICULTURAL USES AND ACTIVITIES ARE COMMON AND PART OF THE IDENTITY OF SANTAQUIN CITY. IT CAN BE ANTICIPATED THAT SUCH AGRICULTURAL USES AND ACTIVITIES MAY NOW OR IN THE FUTURE BE CONDUCTED NEAR THIS PROPERTY. PROPERTY OWNERS NEED TO UNDERSTAND AND ACKNOWLEDGE THAT THEY MAY EXPERIENCE ANNOYANCE OR INCONVENIENCE WHICH MAY RESULT FROM SUCH NORMAL AGRICULTURAL USES AND ACTIVITIES. ADDITIONALLY, PROPERTY OWNERS MUST REFRAIN FROM TRESPASSING ON PRIVATE PROPERTY WHICH CAN NEGATIVELY IMPACT THE INTEGRITY OF THE AGRICULTURAL LANDS AND BUSINESSES.

2 -LOTS 22-29 AND 59 HAVE NO ACCESS TO MAIN STREET. LOTS 1-4 AND 59-77 ARE TO HAVE NO ACCESS TO THE FRONTAGE ROAD OR 900 EAST

SURVEYOR'S CERTIFICATE

I, TRAVIS TRANE, DO HEREBY CERTIFY THAT I AM A PROFESSIONAL LAND SURVEYOR AND THAT I HOLD LICENSE NO. 5152741, IN ACCORDANCE WITH TITLE 58, CHAPTER 22 OF THE PROFESSIONAL ENGINEERS AND LAND SURVEYORS LICENSING ACT. I FURTHER CERTIFY THAT BY AUTHORITY OF THE OWNERS, A SURVEY WAS COMPLETED IN ACCORDANCE WITH SECTION 17-23-17. I FURTHER CERTIFY THAT I HAVE VERIFIED ALL MEASUREMENTS AND THAT MONUMENTS HAVE BEEN PLACED AS SHOWN ON THIS PLAT, I HEREBY STATE THAT THIS PLAT IS TRUE AND CORRECT TO THE BEST OF MY KNOWLEDGE, INFORMATION, BELIEF AND IN MY PROFESSIONAL OPINION.

(SURVEYOR), P.L.S. DATE

BOUNDARY DESCRIPTION

Beginning at the West Quarter Corner of Section 6, Township 10 South, Range 2 East, Salt Lake Base and Meridian; thence South 89°18'00" East 658.47 feet to a rebar and cap #166405; thence South 00°02'31" West 288.75 feet; thence North 89°02'42" East 6.49 feet; thence South 00°05'50" East 1068.29 feet; thence West 666.47 feet; thence North 00°12'00" West 126.64 feet; thence East 2.50 feet; thence North 00°05'50" West 342.27 feet; thence South 89°59'56" West 277.32 feet; thence North 00°02'00" West 235.37 feet; thence West 378.10 feet; thence North 00°26'12" West 529.99 feet; thence North 89°15'34" West 1.46 feet; thence North 00°26'12" West 73.48 feet; thence South 89°43'34" East 23.43 feet; thence Southeasterly 91.79 feet along the arc of a 315 foot radius curve to the right, through a central angel of 16°41'45" the chord of which bears South 81°22'43" East 91.47 feet; thence South 73°01'51" East 42.07 feet; thence Southeasterly 110.72 feet along the arc of a 385 foot radius curve to the left, through a central angel of 16°28'39" the chord of which bears South 81°16'11" East 110.34 feet; thence South 89°30'30" East 368.24 feet; thence North 00°25'42" West 103.60 feet; thence South 89°18'00" East 29.48 feet to the point of beginning.

Parcel contains: 30.86 acres

Basis of Bearing: the line between the East Quarter Corner and the Southeast Corner of Section 1, Township 10 South, Range 2 East, Salt Lake Base and Meridian which bears South 00°05'50" East (NAD 27).

OWNER'S DEDICATION

We, the undersigned owners of all the real property depicted on this plat and described in the surveyors certificate on this plat, have caused the land described on this plat to be divided into lots, streets, parks, open spaces, easements and other public uses as designated on the plat and now do hereby dedicate under the provisions of 10-9a-607, Utah code, without condition, restriction or reservation to Santaquin City, Utah, all streets, water, sewer and other utility easements and improvements, open spaces, parks and all other places of public use and enjoyment to Santaquin City, Utah together with all improvements required by the Development Agreement between the undersigned and Santaquin City for the benefit of the City an the inhabitants thereof.

OWNER(S): PRINTED

AUTHORIZED SIGNATURES

ACKNOWLEDGEMENT

On the _____ day of _____, 20 , personally appeared before me the persons signing the foregoing Owners Dedication known to me to be authorized to execute the foregoing Owners Dedication for and on behalf of the owners who duly acknowledge to me that the Owners Dedication was executed by them on behalf of the Owners.

My Commission Expires _____

NOTARY PUBLIC SIGNATURE

COMMISSION NUMBER

PRINTED NAME OF NOTARY

ACCEPTANCE BY LEGISLATIVE BODY

The_____ of _____, County of Utah, Approves this subdivision an hereby accepts the dedication of all streets, easements, and other parcels of land intended for public purposes for the perpetual use of the public this _____day of_____, 20

APPROVED MAYOR OF SANTAQUIN CITY

CITY ENGINEER
(See Seal Below)

ATTEST BY CITY CLERK-RECORDER
(See Seal Below)

PLAT 'A'
SHEET 1 OF 2

SANTAQUIN ESTATES

A RESIDENTIAL SUBDIVISION

SANTAQUIN UTAH COUNTY, UTAH

SURVEYOR SEAL	NOTARY PUBLIC SEAL	CITY-COUNTY ENGINEER SEAL	CLERK-RECORDED SEAL

Curve Table					
Curve #	Length	Radius	Delta	Chord	Chord Bearing
C1	91.79	315.00	16°41'45"	91.47	N81°22'43"W
C2	110.72	385.00	16°28'39"	110.34	S81°16'11"E
C3	91.79	315.00	16°41'45"	91.47	N81°22'43"W
C4	110.72	385.00	16°28'39"	110.34	S81°16'11"E
C5	394.57	250.00	90°25'42"	354.87	N44°47'09"E
C6	23.32	15.00	89°04'48"	21.04	N44°58'06"W
C7	473.48	300.00	90°25'42"	425.85	N44°47'09"E
C8	187.79	350.00	30°44'30"	185.55	N74°37'45"E
C9	20.06	15.00	76°38'09"	18.60	N82°25'25"W
C10	21.06	15.00	80°26'15"	19.37	S3°53'13"E
C11	224.56	350.00	36°45'37"	220.72	N17°57'06"E
C12	23.80	15.00	90°55'12"	21.38	S45°01'54"W
C13	23.32	15.00	89°04'48"	21.04	S44°58'06"E
C14	28.02	192.50	8°20'27"	28.00	N39°56'07"W
C15	192.02	250.00	44°00'30"	187.34	N22°06'05"W
C16	147.86	192.50	44°00'30"	144.25	N22°06'05"W
C17	242.94	307.50	45°15'56"	236.67	N22°43'48"W
C18	544.32	1185.00	26°19'05"	539.54	N76°20'57"W
C19	139.78	300.00	26°41'46"	138.52	S76°32'18"E
C20	89.22	300.00	17°02'23"	88.89	N19°44'45"E
C21	78.45	500.00	8°59'23"	78.37	S69°32'48"E
C22	130.33	1031.50	7°14'22"	130.25	N70°25'18"W
C23	202.75	500.00	23°14'02"	201.37	S11°15'10"W
C24	246.69	1000.00	14°08'03"	246.06	S7°25'52"E
C25	251.35	1000.00	14°24'04"	250.68	N7°17'52"W
C26	246.66	500.00	28°15'56"	244.17	S14°07'58"W
C27	150.66	1000.00	8°37'56"	150.52	S4°18'58"E
C28	148.97	1000.00	8°32'06"	148.83	N4°21'53"W
C29	58.52	500.00	6°42'22"	58.49	S86°38'29"W
C30	219.07	300.00	41°50'20"	214.23	N69°04'50"E
C31	254.41	300.00	48°35'22"	246.86	N23°51'59"E
C32	23.59	15.00	90°05'51"	21.23	N44°57'05"E
C33	23.54	15.00	89°54'09"	21.20	N45°02'55"W
C34	23.91	50.00	27°23'46"	23.68	N13°36'03"E
C35	145.57	55.00	151°38'39"	106.65	S48°31'24"E
C36	29.97	50.00	34°20'44"	29.53	S72°49'39"W
C37	23.54	15.00	89°54'09"	21.20	S45°02'55"E
C38	37.03	50.00	42°25'50"	36.19	N68°47'04"W
C39	163.18	55.00	169°59'39"	109.58	N47°26'02"E
C40	32.70	50.00	37°27'58"	32.12	S18°49'49"E
C41	23.59	15.00	90°05'51"	21.23	N44°57'05"E
C42	258.26	1027.50	14°24'04"	257.58	N7°17'52"W
C43	244.43	972.50	14°24'04"	243.79	N7°17'52"W
C44	89.01	972.50	5°14'39"	88.98	S11°52'34"E
C45	24.23	15.00	92°32'32"	21.68	S37°01'02"W
C46	55.30	472.50	6°42'22"	55.27	S86°38'29"W
C47	61.74	527.50	6°42'22"	61.71	S86°38'29"W
C48	24.23	15.00	92°32'45"	21.68	S50°26'20"E
C49	253.47	1027.50	14°08'03"	252.83	S7°25'52"E
C50	64.53	972.50	3°48'07"	64.52	S2°15'54"E
C51	174.68	472.50	21°10'53"	173.68	S10°13'36"W
C52	213.91	527.50	23°14'02"	212.44	S11°15'10"W
C53	32.22	50.00	36°55'11"	31.66	S39°16'38"W
C54	137.68	55.00	143°25'51"	104.45	N13°58'42"W
C55	16.49	50.00	18°53'31"	16.41	S76°14'52"E
C56	23.48	15.00	89°40'18"	21.15	N21°57'58"W
C57	133.81	1059.00	7°14'22"	133.72	N70°25'18"W
C58	126.86	1004.00	7°14'23"	126.78	N70°25'18"W
C59	68.15	527.50	7°24'10"	68.11	S70°20'24"E
C60	24.54	15.00	93°43'02"	21.89	S66°30'10"W
C61	59.27	472.50	7°11'15"	59.24	S70°26'51"E
C62	24.19	15.00	92°23'56"	21.65	S20°39'16"E
C63	72.29	327.50	12°38'52"	72.15	N19°13'16"E
C64	23.66	15.00	90°22'27"	21.28	S58°05'03"W
C65	24.74	15.00	94°29'18"	22.03	N33°45'50"W
C66	70.32	272.50	14°47'07"	70.12	N20°52'23"E
C67	260.23	527.50	28°15'56"	257.60	S14°07'58"W
C68	162.00	472.50	19°38'39"	161.21	S9°49'20"W
C69	146.52	972.50	8°37'56"	146.38	S4°18'58"E
C70	153.06	1027.50	8°32'06"	152.92	N4°21'53"W
C71	154.81	1027.50	8°37'56"	154.66	S4°18'58"E
C72	144.87	972.50	8°32'06"	144.74	N4°21'53"W
C73	171.20	1154.00	8°30'01"	171.05	N85°15'30"W
C74	23.32	15.00	89°04'48"	21.04	S44°58'06"E
C75	561.32	1216.00	26°26'54"	556.35	N76°17'03"W
C76	125.91	269.00	26°49'05"	124.76	S76°28'08"E
C77	270.04	1154.00	13°24'27"	269.43	N70°01'29"W
C78	153.51	331.00	26°34'19"	152.14	S76°36'25"E

Curve Table					
Curve #	Length	Radius	Delta	Chord	Chord Bearing
C79	223.57	1185.00	10°48'36"	223.24	N84°06'12"W
C80	320.74	1185.00	15°30'29"	319.76	N70°56'39"W
C81	28.95	500.00	3°19'03"	28.95	S26°36'25"W
C82	217.71	500.00	24°56'54"	216.00	S12°28'27"W
C83	110.76	1000.00	6°20'46"	110.70	S3°32'13"E
C84	135.93	1000.00	7°47'17"	135.82	S10°36'15"E
C85	73.38	192.50	21°50'26"	72.94	N24°50'40"W
C86	46.46	192.50	13°49'38"	46.34	N7°00'39"W
C87	23.59	15.00	90°05'50"	21.23	N44°57'05"E
C88	26.48	55.00	27°34'49"	26.22	S13°30'31"W
C89	51.05	55.00	53°11'02"	49.24	S26°52'24"E
C90	68.04	55.00	70°52'49"	63.78	S88°54'19"E
C91	2.74	50.00	3°08'06"	2.74	S57°13'19"W
C92	27.24	50.00	31°12'38"	26.90	S74°23'42"W
C93	1.76	50.00	2°00'58"	1.76	N88°59'30"W
C94	35.27	50.00	40°24'52"	34.54	N67°46'35"W
C95	54.38	55.00	56°38'53"	52.19	S75°53'36"E
C96	52.65	55.00	54°51'07"	50.67	N48°21'24"E
C97	56.15	55.00	58°29'38"	53.74	N8°18'59"W
C98	68.24	1027.50	3°48'19"	68.23	N2°00'00"W
C99	84.53	1027.50	4°42'48"	84.50	N6°15'33"W
C100	88.17	1027.50	4°54'59"	88.14	N11°04'27"W
C101	17.32	1027.50	0°57'57"	17.32	N14°00'55"W
C102	57.77	972.50	3°24'13"	57.76	N1°47'57"W
C103	80.38	972.50	4°44'08"	80.35	N5°52'07"W
C104	80.12	972.50	4°43'14"	80.10	N10°35'48"W
C105	26.16	972.50	1°32'28"	26.16	N13°43'40"W
C106	72.20	1027.50	4°01'35"	72.19	S12°29'06"E
C107	79.53	1027.50	4°26'06"	79.51	S8°15'16"E
C108	68.30	1027.50	3°48'32"	68.29	S4°07'57"E
C109	33.43	1027.50	1°51'51"	33.43	S1°17'46"E
C110	32.41	527.50	3°31'14"	32.41	S1°23'46"W
C111	60.00	527.50	6°31'01"	59.97	S6°24'54"W
C112	60.69	527.50	6°35'29"	60.65	S12°58'09"W
C113	60.81	527.50	6°36'18"	60.78	S19°34'02"W
C114	10.09	527.50	1°05'45"	10.09	S89°26'48"W
C115	51.65	527.50	5°36'38"	51.63	S86°05'36"W
C116	27.95	472.50	3°23'21"	27.95	S1°19'50"W
C117	60.45	472.50	7°19'50"	60.41	S6°41'25"W
C118	61.91	472.50	7°30'27"	61.87	S14°06'34"W
C119	24.36	472.50	2°57'15"	24.36	S19°20'25"W
C120	18.77	55.00	19°33'16"	18.68	N47°57'35"E
C121	54.54	55.00	56°49'11"	52.34	N9°46'21"E
C122	47.82	55.00	49°49'01"	46.33	N43°32'44"W
C123	16.55	55.00	17°14'24"	16.49	N77°04'26"W
C124	10.52	1059.00	0°34'08"	10.52	N67°05'11"W
C125	46.01	1059.00	2°29'21"	46.00	N68°36'55"W
C126	46.07	1059.00	2°29'33"	46.06	N71°06'22"W
C127	31.22	1059.00	1°41'21"	31.22	N73°11'49"W
C128	14.96	472.50	1°48'52"	14.96	S73°08'03"E
C129	44.31	472.50	5°22'23"	44.29	S69°32'25"E
C130	49.57	1004.00	2°49'43"	49.56	N68°12'58"W
C131	50.01	1004.00	2°51'14"	50.00	N71°03'27"W
C132	27.29	1004.00	1°33'26"	27.29	N73°15'46"W
C133	22.76	527.50	2°28'21"	22.76	S72°48'18"E
C134	45.39	527.50	4°55'49"	45.38	S69°06'13"E
C135	91.70	472.50	11°07'12"	91.56	S14°05'03"W
C136	70.30	472.50	8°31'27"	70.23	S4°15'44"W
C137	5.76	972.50	0°20'22"	5.76	S0°10'11"E
C138	60.05	972.50	3°32'16"	60.04	S2°06'30"E
C139	64.60	972.50	3°48'22"	64.59	S5°46'48"E
C140	16.11	972.50	0°56'57"	16.11	S8°09'28"E
C141	44.41	1027.50	2°28'35"	44.41	N7°23'39"W
C142	60.18	1027.50	3°21'22"	60.18	N4°28'40"W
C143	48.47	1027.50	2°42'09"	48.46	N1°26'55"W
C144	27.92	972.50	1°38'43"	27.92	N0°55'11"W
C145	48.07	972.50	2°49'55"	48.06	N3°09'30"W
C146	48.25	972.50	2°50'33"	48.24	N5°59'44"W
C147	20.63	972.50	1°12'56"	20.63	N8°01'29"W
C148	27.81	1027.50	1°33'02"	27.80	S7°51'26"E
C149	48.23	1027.50	2°41'21"	48.22	S5°44'14"E
C150	48.06	1027.50	2°40'48"	48.06	S3°03'09"E
C151	30.71	1027.50	1°42'45"	30.71	S0°51'23"E
C152	7.97	527.50	0°51'57"	7.97	S0°25'59"W
C153	50.02	527.50	5°25'59"	50.00	S3°34'57"W
C154	50.20	527.50	5°27'10"	50.18	S9°01'31"W
C155	50.85	527.50	5°31'24"	50.83	S14°30'49"W
C156	52.03	527.50	5°39'04"	52.01	S20°06'02"W

Curve Table					
Curve #	Length	Radius	Delta	Chord	Chord Bearing
C157	49.16	527.50	5°20'22"	49.14	S25°35'45"W
C158	4.66	272.50	0°58'45"	4.66	N27°46'34"E
C159	65.66	272.50	13°48'22"	65.50	N20°23'00"E
C160	50.18	1154.00	2°29'28"	50.17	N75°28'59"W
C161	46.18	1154.00	2°17'34"	46.18	N73°05'28"W
C162	46.05	1154.00	2°17'12"	46.05	N70°48'05"W
C163	46.00	1154.00	2°17'03"	46.00	N68°30'58"W
C164	46.03	1154.00	2°17'07"	46.02	N66°13'53"W
C165	35.60	1154.00	1°46'04"	35.60	N64°12'17"W
C166	10.50	331.00	1°49'06"	10.50	S64°13'49"E
C167	46.04	331.00	7°58'13"	46.01	S69°07'28"E
C168	48.53	331.00	8°23'59"	48.48	S77°18'34"E
C169	48.43	331.00	8°23'01"	48.39	S85°42'05"E

Line Table		
LINE #	LENGTH	DIRECTION
L1	48.11	S04°02'09"E
L2	48.31	S06°41'42"E
L3	48.40	N07°38'15"W
L4	48.18	N05°13'35"W
L5	48.05	N02°47'31"W
L6	49.83	N00°11'16"W
L7	57.91	N03°05'55"E
L8	50.13	N08°12'38"E
L9	50.57	N12°46'22"E
L10	51.37	N17°23'29"E
L11	23.83	S00°25'42"E
L12	29.43	N65°03'06"W

Line Table		
LINE #	LENGTH	DIRECTION
L14	40.00	N90°00'00"W
L15	21.38	S00°05'50"E
L16	77.36	S02°57'50"W
L17	87.09	S02°57'50"W
L18	81.68	N05°08'36"W
L19	78.43	N05°08'36"W
L20	89.62	N05°08'36"W
L21	98.31	N07°08'24"W
L22	13.78	N07°08'24"W
L23	10.94	S89°30'30"E

FOUND SECTION CORNER
COMMON AREA DEDICATED TO SANTAQUIN CITY
LIMITED COMMON (SHARED DRIVEWAY ACCESS, PUE)
BOUNDARY
SECTION LINE
ROAD CENTER LINE
EASEMENT LINE
BUILDING SETBACK

TRANE ENGINEERING, P.C.
CONSULTING ENGINEERS AND LAND SURVEYORS
27 EAST MAIN LEHI, UTAH 84043 (801) 768-4544

PLAT "A"
SHEET 2 OF 2

SANTAQUIN ESTATES

A RESIDENTIAL SUBDIVISION

SANTAQUIN UTAH COUNTY, UTAH

SURVEYOR SEAL	NOTARY PUBLIC SEAL	CITY-COUNTY ENGINEER SEAL	CLERK-RECORDED SEAL

IRRIGATION NOTES

1. The Contractor shall be familiar with the irrigation technical specifications for this project. Failure to do so shall not relieve him of meeting all of the requirements contained therein.

2. The irrigation plan is diagrammatic in nature, and some drafting liberties have been taken to maintain the graphic clarity of the drawings. All irrigation equipment shall be located in planting areas only, unless noted otherwise. The Contractor shall install piping to minimize changes in direction, avoid placement under large trees or large shrubs, and avoid placement under hardscape features. Refer to the irrigation equipment schedule, installation details, and specifications for equipment and its proper installation.

3. The Contractor shall use only the equipment and products specified in the construction drawings. No substitution of materials will be allowed on the irrigation system without prior authorization from the Landscape Architect and the Owner.

4. The Contractor shall visit and inspect the project site. He shall take into consideration known and reasonably inferable conditions affecting the proposed work. Failure to visit the site shall not relieve the Contractor of furnishing materials and performing the work required. Any discrepancies between existing site conditions and those indicated on the plans shall be called to the attention of the Landscape Architect prior to continuance of the project.

5. If the water point of connection is located other than as shown on the drawings, or if the water pressure is different than indicated on the plans, or appears to be unusually high or low, the Contractor shall immediately notify the Landscape Architect prior to proceeding with any irrigation work.

6. The Contractor shall keep the premises clean and free of excess equipment, materials, and rubbish incidental to work of this project. Work areas shall be swept clean and trash and debris picked up daily. Open trenches or hazards shall be protected with yellow caution tape. The Contractor is responsible for removal and legal disposal (offsite) of trash and debris generated by his work on this project.

7. Pipe fittings shall conform to the following standards unless otherwise noted:
   - A. All main line fittings four (4) inches or larger shall be push-on, gasketed, and constructed of ductile iron material.
   - B. All main line fittings three (3) inches and smaller shall be solvent weld Schedule 80 PVC.
   - C. M.J. tees, Schedule 80 tees with SxT Schedule 80 bushings, or Harco ductile iron service tees are approved on PVC main lines for automatic control valve installation. M.J. fittings shall be greased and wrapped.
   - D. All lateral line fittings shall be solvent weld Schedule 40 PVC.
   - E. All risers and exposed fittings shall be solvent weld Schedule 80 PVC, including conversions to metal pipe and fixtures, unless otherwise noted on the plans.
   - F. All main line fittings four (4) inches and larger, whether ductile iron or solvent weld, shall be thrust blocked.

8. Irrigation wire shall conform to the following:
   - A. All irrigation control wire (hereafter referred to as 2-wire) from the controller to the field devices must be Polyethylene double-jacketed or UF-B UL PVC double-jacketed two-conductor solid core designed for direct burial systems. The following is recommended:

i. All 2-wire shall be soft drawn, annealed, solid copper conforming to ASTM 33. Conductor insulation must be 4/64-inch thick PVC, conforming to UL Standard #493 for thermoplastic-insulated style UF (Underground Feeder), rated at 60 degrees C.

ii. The two insulated conductors are laid in parallel and encased in a single outer jacket of 3/64-inch thick, high density, sunlight resistant polyethylene conforming to ICEA S-61-402 and NEMA WC5, having a minimum wall thickness of 0.045-inch.

iii. The two conductors must be color-coded: normally one conductor red and one black. Both conductors shall be the same size: 14 AWG.

   - B. All wire crossing water, attached to bridges, going under paving, or where conditions require protection, shall be housed in conduit or sleeves. All out-of-ground conduits shall be rigid metal. All buried conduit may be PVC. In areas where rodents are a known issue, all wire shall be placed in a conduit.
   - C. All splices shall be water-tight. All connections made inside the box to connect the 2-wire to the valve shall be made using a dry-splice connector DBR/Y. Each connector shall be completely sealed and water-proof.
   - D. All other splices in 2-wire wire shall be housed in a separate round valve box and use DBR/Y connectors.
   - E. Lightning arrestors and eight (8) foot long by 5/8-inch diameter copper ground rods shall be used as recommended by the controller manufacturer, and be installed per manufacturer recommendations and installation (8) inch round valve box.
   - F. No aluminum wire shall be used on this project.

9. Run a single fourteen (14) gauge wire along the top of the main line to be used for tracking the location of the main line. The color of the tracing wire shall be different than any other wire color used.

10. All pressure main lines shall have between twenty (20) and thirty (30) inches of cover, while all lateral lines shall have between twelve (12) and fourteen (14) inches of cover. Trench bedding and backfill material shall consist of existing site soil free of rocks larger than one (1) inch in diameter and any other debris. Wasted pipe and other excess project materials or rubbish (tape, wire, trash, wrappers, boxes, plastic or glass bottles, etc.) shall not be backfilled into the trenches. All trenches shall be backfilled, and then watered sufficiently to insure no settling of the surface. In the event of any backfill settlement prior to the end of the guarantee period, the Contractor shall perform all required repairs at his own expense.

11. All control valves shall be located within shrub areas where possible and installed per the details shown on the plans. Each control valve shall have a shut-off valve, and only one (1) control valve and gate valve per valve box. Shut-off valve may be at beginning of manifolds. If manifolds are used, the manifold must be sized so that all valves in manifold are are able to water at the same time. The bottom of the remote control valve shall be a minimum of four (4) inches above the gravel. Isolation gate valves on the main line shall be located in separate valve boxes.

12. All main lines and lateral lines shall be sleeved where they pass under any paved areas. The size of the sleeve shall be twice the size of the pipe being sleeved, unless otherwise specified on the drawings.

13. The automatic controller will be the Vineyard Loop Road Controller, that is to be relocated into the pump house and mounted on the wall. Coordinate with City on location.

14. Prior to backfilling any trenches or irrigation lines:
   - A. All main lines shall be capped and pressure tested at 120 psi for a period of 4 hours. Any leaks found shall be corrected by removing the leaking pipe or fittings and installing new material in its place. Repeat the pressure test to insure the absence of leaks.
   - B. The Contractor shall not allow nor cause any of his work to be covered until it has been inspected, tested, and approved by the Landscape Architect.
   - C. Where a main line has been allowed to sit in the trench uncovered for any length of time prior to testing, the line may be shaded with a thin layer of soil to minimize weather related expansion or contraction of the pipe.

16. The Contractor shall adjust all irrigation heads to provide an even coverage and to keep spray off of buildings, fences,
walkways, and paved surfaces.

17. When the sprinkler system has been completed, the Contractor shall, in the presence of the Landscape Architect or Owner's Representative, conduct a coverage test of the water afforded to the planting areas to insure that it is consistent and uniform. The Contractor shall provide, at his own expense, all materials and labor necessary to correct any deficiencies or inadequacies discovered during the coverage test.

The Contractor shall keep on site a current and accurate as-built record of his work. It shall include exact dimensioned locations, grades, elevations, and the size of all exterior and interior underground piping, valves, and drains. Dimensions shall indicate distances from columns, buildings, curbs, and similar permanent features on the site. This information shall be recorded on a print as the work progresses, but shall be permanently recorded on a reproducible. Please provide both a hard and digital copy.

18. The irrigation contractor shall maintain the system for the duration of the contract period, including the maintenance period.

19. Upon final acceptance of the sprinkler irrigation system as being operational and properly installed, the Contractor shall guarantee the workmanship, materials, fixtures, and equipment to be free from defects for a period of one (1) year after that date.

PLANTING NOTES

1. The Contractor shall be familiar with the planting and irrigation technical specifications - failure to do so will not relieve the contractor of his responsibility to fulfill all requirements in said specifications.

2. Prior to any planting operations, the irrigation system shall be fully operational and all planting areas shall be thoroughly moistened.

3. The planting plan is diagrammatic, and all plant locations are approximate. Plant symbols take precedence over plant quantities shown on the plans and in the Plant Material Schedule. The Contractor shall verify all plant quantities and notify the Landscape Architect of any discrepancies between the quantities and the symbols shown. The Plant Materials Schedule is for the Contractor's convenience only.

4. No substitution of size, grade, variety or any species shall be permitted except by written permission of the Landscape Architect. Upon receiving Notice to Proceed, the Contractor shall provide written proof that the specified plant material is available and has been secured or reserved specifically for this project. Obtain nursery stock and other plant materials from reliable and stable sources prior to order and delivery.

5. Final Grade Preparation
   - A. The subgrade Material Shall be rough graded to plus or minus one tenth (+0.1) foot of the final rough grade, which will allow the Contractor to achieve final finished grade through the placement of the topsoil.
   - B. Protect existing trees, shrubs, lawns, existing structures, fences, roads, sidewalks, paving, curb and gutter and other features during Construction.
   - C. Protect above or below grade utilities. Contact utility companies to repair damage to utilities. Contractor shall pay all cost of repairs which he causes.
   - D. Maintain all benchmarks, control monuments and stakes, whether newly established by surveyor or previously existing. Protect from damage and dislocation.
   - E. Grading Intent: Spot elevations and contours indicated are based on the best available data. The intent is to maintain constant slopes between spot elevations.
   - F. Conduct work in an orderly manner. Do not create a nuisance. Do not permit soil accumulation on streets or sidewalks. Do not allow soil to be washed into sewers and storm drains.
   - G. Grade slopes to provide adequate drainage after compaction. Do not create water pockets or ridges. Use all means necessary to prevent erosion of freshly graded areas during construction until surfaces have been constructed and landscaping areas have taken hold.
   - H. Grades shall be smooth, even, and maintain a consistent uniform slope. Grades with undulating surfaces will be rejected and require re-grading.
   - I. The Contractor shall maintain a minimum of two (2) percent drainage away from all buildings, structures, and walls. Finished grades shall be smoothed to eliminate puddling or standing water.
   - J. All finished grades shall be approved by the Landscape Architect prior to installation of any plant materials.

6. All planting areas shall receive a minimum of four (4) inches of imported topsoil in turf areas and twelve (12) inches in planting beds. All topsoil used on this project shall be stockpiled and provided by owner. Contractor shall place and spread topsoil per these plans and specifications.

7. The following procedure shall be followed in placing all topsoil:
   - A. All areas to receive topsoil which have a slope of less than ten (10) percent shall be cross-ripped to a depth of four (4) to six (6) inches.
   - B. The surface of the subgrade shall be scarified to a depth of two (2) inches to provide a transition zone between the subgrade and the topsoil. Place the topsoil on the subgrade and fine grade to the final finished grade and topsoil depths as indicated on the drawings and in these notes.
   - C. Any required soil amendments (i.e. organic matter, fertilizer, gypsum, etc.) shall be placed directly on the topsoil at the required rates and spread evenly over the planting area. The amendments shall then be thoroughly blended into the topsoil to a depth of four (4) inches. Where only a dry, granular fertilizer is to be added, it may be applied to the surface and raked in during the fine grading process.

8. All plants used for this project shall conform to the following:
   - A. Any inspection certificates required by law shall accompany each delivery of plants and such certificate shall be filed with the Landscape Architect. All plants shall be subject to inspection and approval at the place of growth or upon delivery to the site for their quality, size, species, and variety. Such approval shall not impair the right of inspection and rejection at the site or during progress of work for size and condition of the plants, latent defects, or injuries. Any and all rejected plants shall be removed immediately from the premises by the Contractor. The
   Contractor shall make all replacements at his expense should he fail to comply in full with any of the specifications. Necessary replacements will be made as soon as weather conditions permit and all such plants replaced shall conform to all specifications herein.
   - B. Plants shall be fresh and vigorous, of normal habit and growth, and free of disease, insects and insect eggs and insect larvae, weeds and weed seed. No heeled-in plants from cold storage shall be accepted except on approval by the Landscape Architect prior to installation.

9. All plants shall be installed using the following procedures:
   - A. Plants shall be generally located as indicated by the drawing. The Contractor shall stake out the location of all plants and planting areas, and no excavation or installation shall commence until such locations have been approved by the Landscape Architect.
   - B. All trees and shrubs shall be planted in pits as detailed in the planting details contained herein or as noted on the drawings. Tree and shrub pits shall be circular in outline, with a diameter at least two (2) times the diameter of the rootball depth. When the plant is properly placed in the plant pit, the root collar shall be at or approximately one (1) inch above finished grade. The sides of the plant pit shall be roughened, and not smooth or sculpted.
   - C. Plant backfill mix shall be one hundred (100) percent native site soil.
   - D. For container grown plants, remove the container and place the plant vertically in the plant pit, directly on undisturbed soil. The root crown or collar shall be at or approximately one (1) inch above the finished grade. Perennial plants and ornamental grasses shall be planted with root collar at finished grade.
   - E. For balled and burlapped plants, place the plant vertically in the center of the pit, with the rootball resting on undisturbed soil. Cut and remove the wire basket and burlap or other wrapping material from the rootball. This may be done with the rootball in the pit. Any burlap or wire pieces underneath the rootball may be left in place if they cannot be removed. Do not fold the burlap over, but cut away as much as possible without disturbing the rootball. No burlap shall be pulled from under the rootball. Backfill the bottom one third (1/3) of the pit as the wire and burlap are removed. In all cases, maintain the integrity of the rootball.
   - F. Specified backfill material shall be carefully and firmly worked and tamped under and around the rootball to fill all voids. When backfilled and compacted to two thirds (2/3) the depth of the pit, thoroughly water with a hose to completely soak the roots and remove any air pockets.
   - G. The plant pit shall then be completely backfilled with the specified backfill mix and tamped well. A shallow watering basin or rain cup shall be formed around each plant. This basin will be equal in diameter to that of the original planting pit.
   - H. After planting, the following operations shall be performed:
   - I. Stake and mulch all trees per installation details.
   - II. Remove all nursery stakes ties, and tags from all plants. Prune and remove any dead, damaged, or broken branches. Maintain side growth on all trees.

10. Staking shall be performed as follows:
   - A. Two (2) 2ˣx 2ˣ square or 2' diameter round wood stakes, minimum ten (10) feet in length, shall be used to support each tree planted under this contract unless otherwise indicated. Metal t-posts shall not be used.
   - B. Tree ties shall conform to the staking detail shown on the planting detail sheet. Wire and vinyl hose shall not be used.
   - C. Each stake shall be located adjacent to the rootball, on opposing sides, to provide maximum support to the trunk. Do not penetrate the rootball with the stake.
   - D. The stakes shall be driven into the pit bottom after the tree has been placed in the pit, but before backfilling begins so as to avoid damage to the roots.
   - E. Stakes and ties shall be removed after one (1) full growing season from the time the tree was installed.

11. All plants shall be thoroughly watered immediately after planting. This shall mean full and thorough saturation of all backfill in the pits and beds during the same day of planting. Water shall be applied only by open end hose at very low pressure to avoid air pockets, injury to the plant, or washing away of backfill. When installed, watered, and fully settled, the plants shall be vertical. Subsequent watering shall be provided by the site's irrigation system. The Contractor shall insure that all plants, especially trees, receive sufficient water to maintain healthy growth and vigor. Over-watering shall be avoided, and prolonged saturation of the soil around the trees shall be eliminated by appropriately controlling the irrigation circuit which provides water to that area.

12. Mulch (see plant materials schedule and specifications for size requirements) shall be placed to a depth of three (3) inches on top of the topsoil in all planting beds and over tree planting pits. The finished grade of the mulch shall be as follows:
   - A. Two (2) inches below the surface or finished grade of any paving, mow strips, or walks adjacent to the planting area.
   - B. One (1) inch below top of metal edging.
   - C. At adjacent finished grade of the turf surrounding tree planting pits.
   - D. No mulch required in tree pits.
   - E. Just prior to placement of the mulch, the Contractor shall treat the mulched areas with a pre-emergent herbicide according to the manufacturer's recommendations.

13. For projects with turf grass sod, all sod used for this project shall be free of grassy and broad-leaf weeds, contain no bare or burned spots, and be clean and strongly rooted. It shall be of the varieties noted in the plans and Plant Material Schedule. The sod shall be cut using approved methods and equipment. It shall be cut in pieces not exceeding one (1) square yard, with a uniform thickness on all pieces. Sod thickness may vary between a minimum of on (1) inch and a maximum of one and one half (1 ½) inches, but must be consistent throughout this project. The Contractor shall notify the Landscape Architect of the source of the sod prior to placement. The sod shall be stripped and delivered to the site not more than twenty-four (24) hours prior to laying. It shall be maintained in a moist and healthy condition to encourage immediate growth.

14. The following procedure shall be followed when installing the sod:
   - A. Lay the sod on smooth, moist topsoil, working off planks if required.
   - B. Rake the topsoil to loosen and level prior to placing each course of sod.
   - C. Lay strips perpendicular to the direction of the slope. Strips shall be parallel to each other, with their end seams staggered. The sod shall be neither stretched nor overlapped, and all joints shall be butted tightly together.
   - D. Roll the sod immediately after placing and thoroughly water with a fine spray to a depth sufficient that the underside of the new sod and the soil immediately below the sod are thoroughly wet.
   - E. On slopes two (2) horizontal to one (1) vertical or steeper, lay the sod perpendicular to the slope and secure every row with wooden pegs at two (2) feet maximum on center. Drive the pegs flush with the soil portion of the sod.
   - F. Sod pieces shall be laid tightly together. Sod areas with gaps caused by pieces not being laid tightly enough together or areas with ridges from overlapping pieces shall not be accepted and the Contractor will be required to re-lay the sod.

15. For projects with grass seed, the contractor may choose to apply seed by drilling or hydroseeding. Hydroseeding shall conform to the following:
   - A. Wood fiber mulch shall be echofiber or conwed or equal, that is virgin wood fiber, free of growth - or germination-inhibiting substances. The mulch shall be air dried with not more than fifteen (15) percent moisture by weight. The total organic weight shall be a minimum of ninety eight (98) percent. Inorganic ash content shall be 0.7±0.2 percent. Water holding capacity shall be 1000G/100G (oven dried weight). The PH range shall be 4.0 - 6.0. The fiber length shall meet the following:
   - I. Fifty (50) percent shall be at least 0.15 inches in length or longer.
   - II. Fifty (50) percent shall be retained on the twenty eight (28) mesh screen
   - B. The seed mix shall be as specified on the plans. Provide written certification that the seed conforms to Utah Seed Law and is in compliance with Utah State Department of Agriculture Regulations.
   - C. The tackifier shall be M-Binder or Plantego or equal.
   - D. Application rates shall be as follows:

I. Wood Fiber Mulch	50 Pounds (min.)/1,000 SF
II. Seed Mix	see plans (7 Pounds/1,000 SF TYP.)
III. Tackifier	100 Pounds/Acre
IV. Fertilizer	7-8 Pounds/1,000 SF
V. Water	92 Gallons/1,000 SF

16. One-step preparation and application of hydroseed mulch shall be as follows:
   - A. The wood fiber mulch, seed, tackifier, fertilizer, and water shall be mixed together in a hydroseeding machine having capacity of at least two thousand (2,000) gallons to allow for a homogeneous slurry which is thoroughly mixed and can be applied easily without clogging. The machinge shall be mounted on a traveling unit which is either self-propelled or drawn by a separate unit. Equipment used in the hydroseeding process shall be thoroughly cleaned of all seed and other materials used in any previous hydroseeding process, prior to hydroseeding on this project.
   - B. The equipment shall have a built-in agitation system and operating capacity sufficient to agitate, suspend, and homogeneously mix a slurry containing not less than fifty (50) pounds of organic mulching amendment plus chemical additives and solids for each one hundred (100) gallons of water.
   - C. The slurry shall be prepared at the site and its components shall be mixed to supply the rates of application as specified. The slurry preparation shall begin by adding water to the tank when the engine is at half (1/2) throttle. The engine throttle shall be open to full speed when the tank is one half (1/2) filled with water. All organic amendments, fiber, and chemicals shall then be added by the time the tank is two thirds (2/3) to three fourths (3/4) full. At this time and not before, the seed mix shall also be added. Spraying shall commence immediately when the tank is full, and the slurry is mixed.
   - D. Apply the hydroseed to form even appearing cover over the required areas. The slurry shall be applied in a downward drilling motion via a fan stream nozzle. It is important to ensure that all the components enter and mix with the soil. Use only qualified and trained personnel to insure uniformity of the hydroseed applications.
   - E. The hydroseeding slurry components shall not be left in the hydroseed machine for more than two (2) hours to avoid seed deterioration.

17. Throughout the course of planting, excess and waste materials as well as excavated subsoil shall be continuously and promptly removed. All areas shall be kept clear and all reasonable precautions taken to avoid damage to existing structures, plants, and grass. When planting has been completed in an area, it shall be thoroughly cleaned of all debris, rubbish, subsoil, and waste materials. These shall be removed from the property and disposed of legally. All planting tools shall also be put away.

flagship homes

1250 East 200 South, Ste. 1D
Lehi | Utah | 84043

STATE OF UTAH
BRONSON R. TATTON
1/31/2022
LICENSED LANDSCAPE ARCHITECT

call **811** or visit www.bluestakes.org
before you dig to have all utilities
located and marked

SANTAQUIN ESTATES

LANDSCAPE PLANS

Main Street & 900 East . Santaquin . Utah

JANUARY 2022

LANDSCAPE
notes & details

L0.1

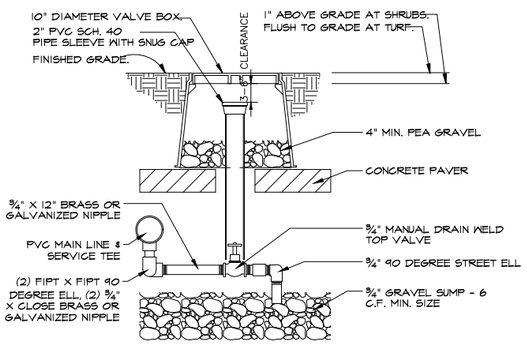

1 MANUAL DRAIN VALVE ASSEMBLY

1 1/2" = 1'-0" DETAIL-FILE

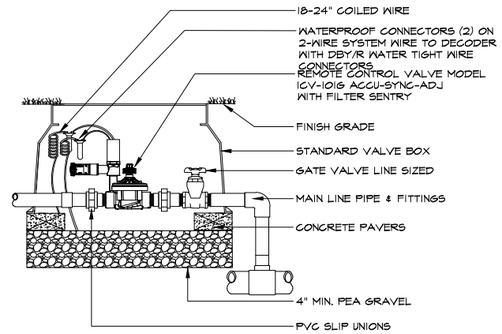

2 REMOTE CONTROL VALVE ASSEMBLY

1 1/2" = 1'-0" B-07

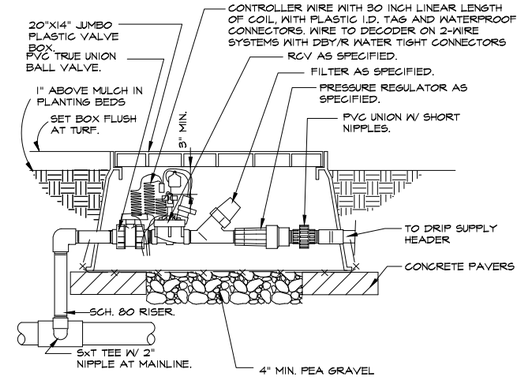

3 DRIP VALVE ASSEMBLY

1 1/2" = 1'-0" B-06

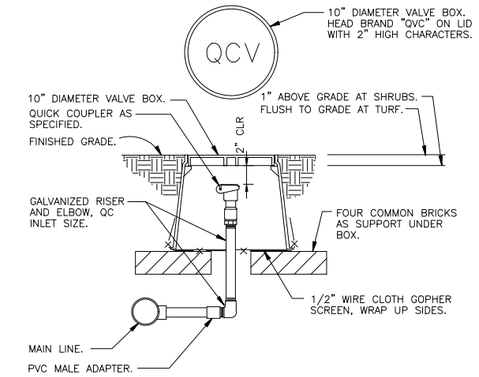

4 QUICK COUPLING VALVE IN BOX

1 1/2" = 1'-0" FX-IR-FX-QUIC-04

flagship homes

1250 East 200 South, Ste. 1D
Lehi | Utah | 84043

STATE OF UTAH · BRONSON R. · LICENSED LANDSCAPE ARCHITECT · 1/31/2022

call **811** or visit www.bluestakes.org before you dig to have all utilities located and marked

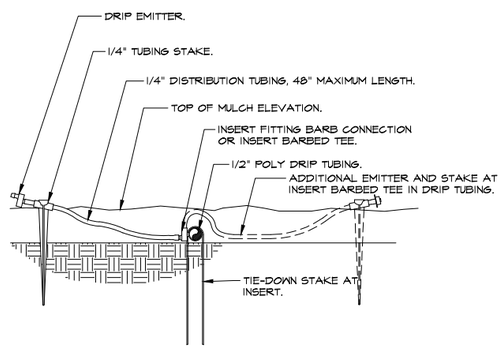

5 DRIP EMITTER AT 1/4" TUBING

3" = 1'-0" FX-IR-FX-EMIT-03

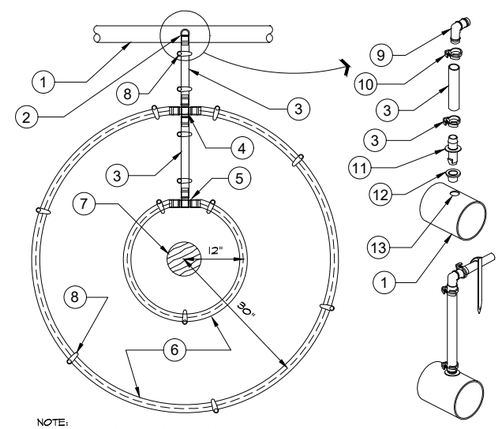

NOTE:
PLACE TIE DOWN STAKES EVERY 3 FT. IN SAND, 4 FT. IN LOAM, AND 5 FT. IN CLAY, AS WELL AS AT ALL CHANGE OF DIRECTION SUCH AS AT TEES OR ELLS.

DRIPLINE TO LATERAL "XPANDO" ADAPTER CONNECTION DETAIL

1. PVC LATERAL SUPPLY PIPE, SIZE AS PER PLAN WITH MINIMUM SIZE 1 1/2" DIAMETER.
2. DRIPLINE CONNECTION TO BELOW GRADE LATERAL PIPE, SEE DRIPLINE TO LATERAL "XPANDO" ADAPTER CONNECTION DETAIL.
3. 1/2" PLOYETHYLENE BLANK TUBING, AS REQUIRED.
4. BARB CROSS INSERT FITTING.
5. BARB TEE INSERT FITTING.
6. AT-GRADE DRIPLINE, INNER RING 12" FROM PLANT, OUTTER RING 30" FROM PLANT. DRIPLINE TO BE 0.9GPH EMITTERS AT 12" O.C.
7. PLANT TRUNK.
8. TYPICAL ANTELCO ASTA TIE-DOWN STAKE, SEE NOTES.
9. DRIPLINE BARBED INSERT ELL.
10. RATCHET CLAMP AT ALL BARBED CONNECTIONS, ANTELCO PART NO. 44345.
11. INSERT ADAPTER, ANTELCO "XPANDO" 13MM X 14MM, PART NO. 45595.
12. 13MM ANTELCO "CAPO; RUBBER GROMMET, NO. 45735.
13. DRILL 5/8" HOLE IN PVC LATERAL PIPE WHERE REQUIRED. YOU MUST USE A "FORSTNER" DRILL BIT FOR DRILLING INTO PVC. REMOVE ANY EXCESS BURRS OR ROUGH EDGES.

6 20 GPH DRIPLINE RING-0.9 GPH @ 12" O.C.

N.T.S. FX-IR-FX-EMIT-02

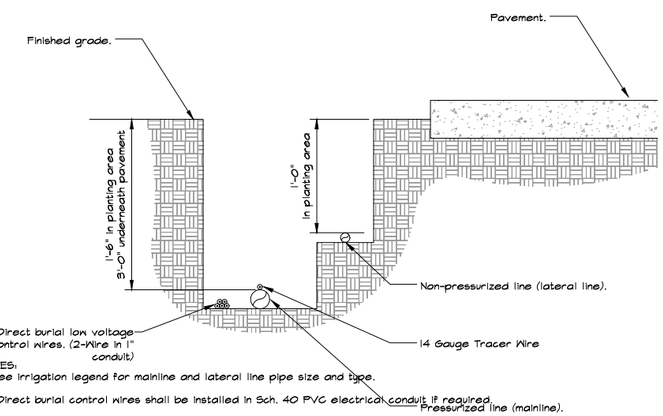

NOTES:
1- See irrigation legend for mainline and lateral line pipe size and type.
2- Direct burial control wires shall be installed in Sch. 40 PVC electrical conduit if required.
3- 2-wire irrigation wire shall be installed in Sch. 40 PVC electrical conduit.

7 IRRIGATION TRENCHING

N.T.S. 8

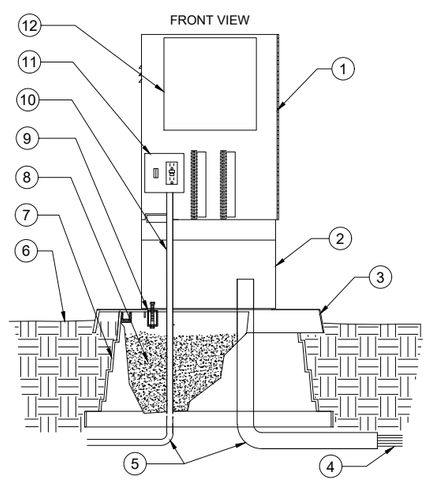

9 QUICKPAD CONTROLLER BASE

N.T.S. FX-IR-STBX-ENCS-13

1. CONTROLLER ENCLOSURE AS SPECIFIED.
2. OPTIONAL PEDESTAL.
3. QUICKPAD-3/16" MINIMUM THICKNESS ALUMINUM POWDERCOATED PREFORMED PAD. SEE QUICPAD TO ENCLOSURE CHART FOR MODEL. INSTALL AS PER MANUFACTURER'S SPECIFICATIONS.
4. PROVIDE CONDUITS FOR CONTROL WIRES TO CONTROL VALVES.
5. PVC LONG SWEEP ELLS.
6. FINISH GRADE-2" (50MM) BELOW TOP OF QUICKPAD.
7. QUICK PAD MOUNTING BASE.
8. PEA GRAVEL 3/4 FULL INSIDE OF BASE.
9. QUICK PAD MOUNTING BRACE.
10. 120 VOLT SERVICE IN CONDUIT.
11. CONTROLLER SUB-ASSEMBLY (CSA) INCLUDES GFI AND TERMINAL STRIPS WITH PLACARDS.
12. AUTOMATIC CONTROLLER AS SPECIFIED.

QUICKPAD TO ENCLOSURE CHART

QUICKPAD FOR STRONG BOX CONTROLLER ENCLOSURES

QUICKPAD MODEL NO.	CONTROLLER ENCLOSURE	QUICKPAD DIMENSIONS
QP-16	SB-16	28.5"X18.5" (724X470MM)
QP-18	SB-18	28.5"X18.5" (724X470MM)
QP-18D	SB-18D	28.5"X28.5" (724X724MM)
QP-22	SB-22	28.5"x28.5" (724x724mm)
QP-24	SB-24	28.5"X18.5" (724X470MM)
QP-24D	SB-24D	28.5"X18.5" (724X470MM)
QP-D	METERED ENCLOSURE	28.5"X18.5" (724X470MM)
QP-LD16	LIGHT DUTY LD-16	28.5"X18.5" (724X470MM)

QUICKPAD FOR STRONG BOX BACKFLOW ENSLCOSURES

QP-20BF	SBBC-20	32"X19" (813X483MM)
QP-30BF	SBBC-30	32"X19" (813X483MM)

QUICKPAD FOR ORIGINAL EQUIPMENT MANUFACTURERS PEDESTALS

QP-CAL	CALSENSE	28.5"X18.5" (724X470MM)
QP-TOROG	TORO GOLF	19"X16" (483X406MM)
QP-MC42	IRRITROL & SUPERIOR	19"X16" (483X406MM)
QP-RBG	RAIN BIRD GOLF	28.5"X18.5" (724X470MM)
QP-RBPEDI6	RAIN BIRD COMMERCIAL	19"X16" (483X406MM)
QP-RM	RAINMASTER	19"X16" (483X406MM)
QP-HUN	HUNTER COMMERCIAL	19"X16" (483X406MM)
QP-SIGM	SIGNATURE METAL	28.5"X18.5" (724X470MM)
QP-SIGP	SIGNATURE PLASTIC	28.5"X18.5" (724X470MM)

SANTAQUIN ESTATES

LANDSCAPE PLANS

Main Street & 900 East . Santaquin . Utah

JANUARY 2022

LANDSCAPE notes & details

L0.2

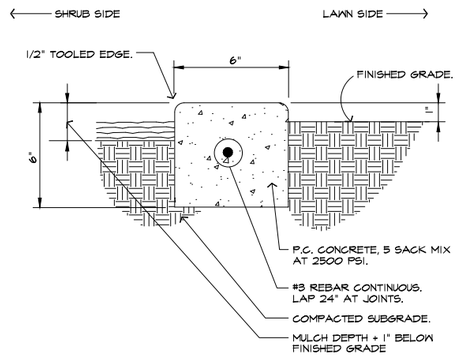

1 6" CAST IN PLACE CONCRETE MOW STRIP

NTS

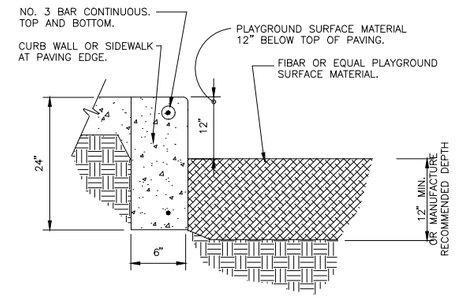

2 PLAY SPACE EDGE AND SURFACING

NTS

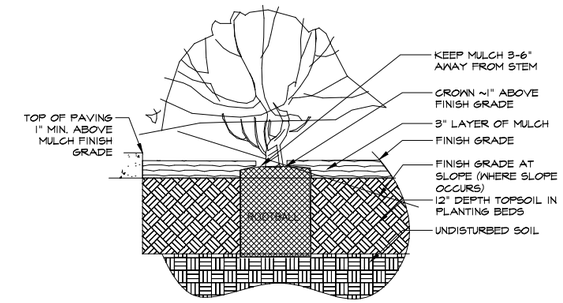

3 SHRUB/PRENNIAL/ORNAMENTAL GRASS PLANTING

1" = 1'-0"

B-10

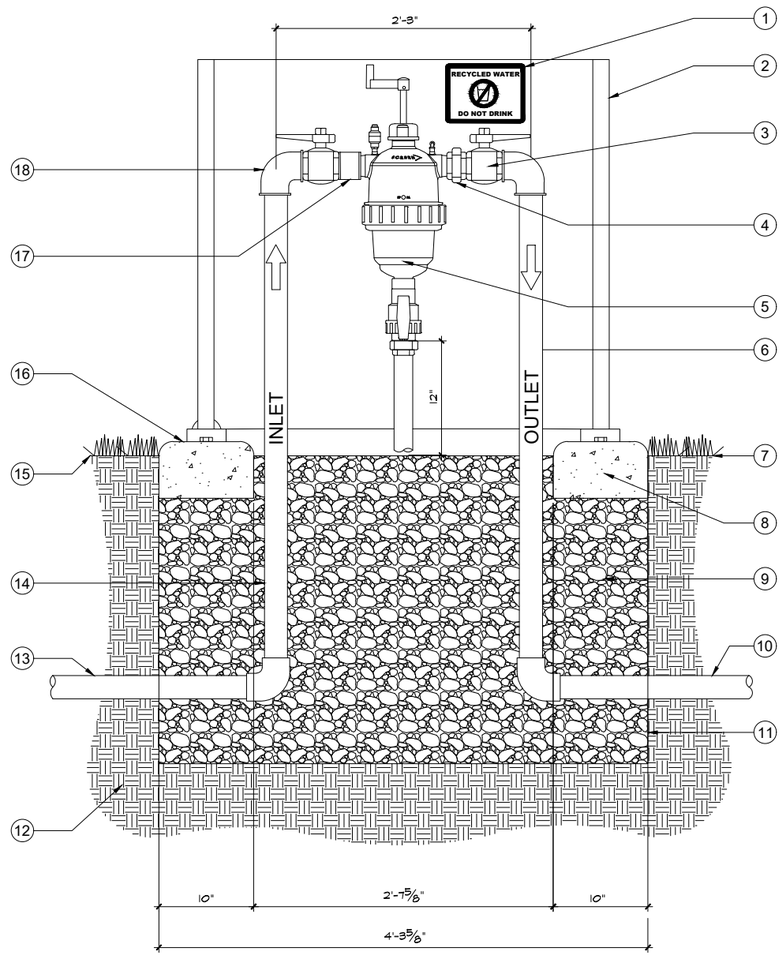

1. RECYCLED WATER STICKER DO NOT DRINK
2. STRONGBOX SBBC-40ALHP 40"L, 34"H, 24"W
3. 2" BRONZE VALVE
4. 2" GALVANIZED UNION
5. 2 IN T SCANAWAY FILTER UNIT
6. 2" GALVANIZED PIPE
7. LANDSCAPE
8. 6" THICK CONCRETE PAD
9. 3/4" CRUSHED GRAVEL SUMP BOX
10. MAINLINE
11. LANDSCAPE FABRIC
12. NATIVE SOIL
13. 2" CLASS 315 PVC PIPE
14. 2" GALVANIZED PIPE
15. FINISH GRADE
16. SECURED SWIVEL MOUNTING PLATES
17. 2" GALVANIZED COUPLING
18. 2" GALVANIZED ELBOW

4 2" T SCANAWAY

1 1/2" = 1'-0"

FX-IR-AMI-FILT-06

DETAIL-FILE

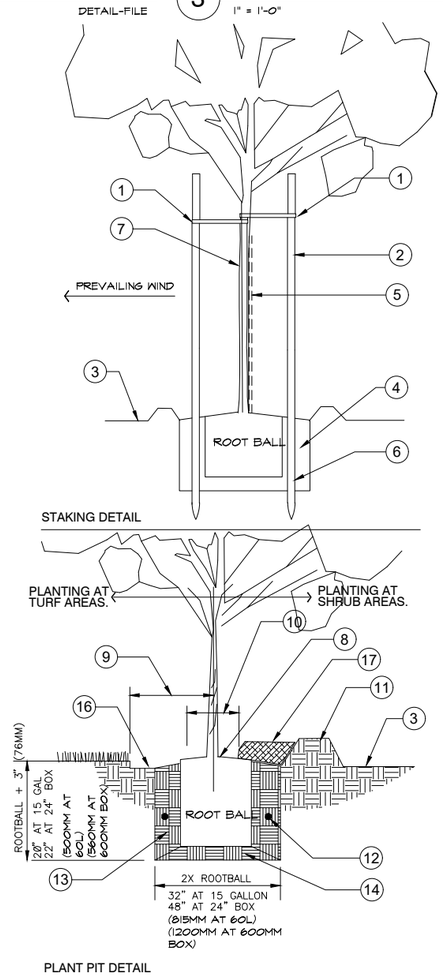

1. GINCH-TIE: DO NOT OVER TIGHTEN. ALLOW TREE TO MOVE SOMEWHAT TO BUILD CALIPER.
2. 2" (50MM) DIAMETER LODGE POLE PINE TREE STAKE.
3. FINISHED GRADE.
4. BACKFILL AS PER PLANTING DETAIL.
5. REMOVE NURSERY STAKE BY THE END OF MAINTENANCE.
6. AVOID DAMAGE TO THE ROOT BALL WITH THE SUPPORT STAKES.
7. TREE AS SPECIFIED.
8. SET ROOTBALL CROWN 1 1/2" (38MM) HIGHER THAN THE SURROUNDING FINISHED GRADE. SLOPE BACKFILL AWAY FROM ROOTBALL FOR POSITIVE DRAINAGE.
9. KEEP TURF CLEAR FOR A 18" (450MM) RADIUS CIRCLE AROUND THE TREE. MULCH WITH A 3" (76MM) THICK LAYER OF SHREDDED BARK.
10. KEEP MULCH 6" TO 8" (150-200MM) FROM BASE OF TREE.
11. 4" (100MM) HIGH WATER WELL AT SHRUB AREAS.
12. PLANT TABLETS AS NOTED OR SPECIFIED.
13. BACKFILL MIX AS NOTED OR SPECIFIED.
14. NATIVE SOIL MIX FIRMLY COMPACTED.
15. BACKFILL 1/2 OF PLANT PIT AND WATER THOROUGHLY. ALLOW WATER TO SOAK IN AND FINISH BACKFILL.
16. RECESS TURF AREA 1" (25MM) NO MULCH WHEN TREES ARE IN TURF
17. MULCH WATER WELL AREA TO 3" (75MM) DEPTH.

NOTES.

- STAKE ALL TRESS 24" (600MM) BOX AND SMALLER. INSTALL V.I.T. PRODUCTS MODEL TG-4 TRIM GUARD ON ALL TREES PLANTED IN TURF.
- REFER TO PLANTING DETAIL AND SPECIFICATIONS FOR PLANT PIT SIZE.
- WRAP TIES AROUND THE TREE TRUNK AND STAKE USING THE STANDARD OR FIGURE EIGHT METHOD. SECURE WITH GALVANIZED NAILS DRIVEN THROUGH TIES AND INTO THE STAKE TO PREVENT SLIPPAGE.
- INSTALL GINCH-TIE PER MANUFACTURER'S RECOMMENDATIONS.

5 TREE PLANTING WITH CINCH-TIE STAKE

N.T.S.

DETAIL-FILE

flagship homes
1250 East 200 South, Ste. 1D
Lehi | Utah | 84043

STATE OF UTAH
BRONSON R.
LICENSED LANDSCAPE ARCHITECT
1/31/2022

call **811** or visit www.bluestakes.org before you dig to have all utilities located and marked

SANTAQUIN ESTATES

LANDSCAPE PLANS

Main Street & 900 East . Santaquin . Utah

JANUARY 2022

LANDSCAPE notes & details

L0.3

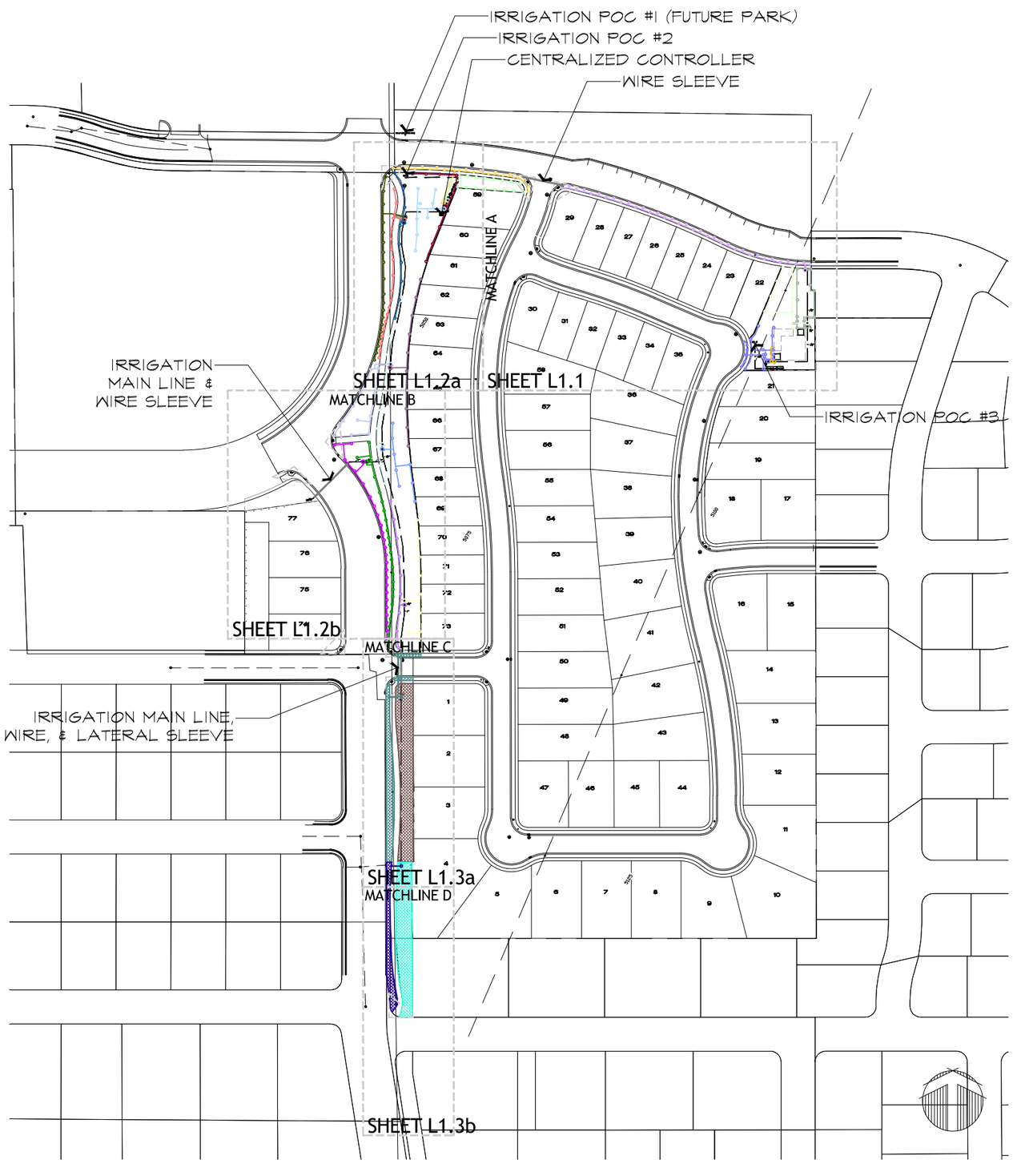

IRRIGATION SCHEDULE

SYMBOL	MANUFACTURER/MODEL/DESCRIPTION	QTY	PSI	DETAIL
L S R LST SST RST	Hunter MP Strip PROS-06-PRS40-CV Turf Rotator, 6" pop-up with factory installed check valve, pressure regulated to 40 psi, MP Rotator nozzle on PRS40 body. LST=Ivory left strip, SST=Brown side strip, RST=Copper right strip.	69	40	
M L O	Hunter MP1000 PROS-06-PRS40-CV Turf Rotator, 6" pop-up with check valve, pressure regulated to 40 psi, MP Rotator nozzle on PRS40 body. M=Maroon adj arc 90 to 210, L=Light Blue 210 to 270 arc, O=Olive 360 arc.	52	40	
K G R	Hunter MP2000 PROS-06-PRS40-CV Turf Rotator, 6" pop-up with factory installed check valve, pressure regulated to 40 psi, MP Rotator nozzle on PRS40 body. K=Black adj arc 90-210, G=Green adj arc 210-270, R=Red 360 arc.	40	40	
B Y A	Hunter MP3000 PROS-06-PRS40-CV Turf Rotator, 6" pop-up with factory installed check valve, pressure regulated to 40 psi, MP Rotator nozzle on PRS40 body. B=Blue adj arc 90-210, Y=Yellow adj arc 210-270, A=Gray 360 arc.	41	40	
LB	Hunter MP3500 PROS-06-PRS40-CV Turf Rotator, 6" Pop-up with factory installed check valve, pressure regulated to 40 psi, MP Rotator nozzle on PRS40 body. LB=light brown adjustable arc, 90-210.	83	40	

SYMBOL	MANUFACTURER/MODEL/DESCRIPTION	QTY	DETAIL
	Drip Control Zone Kit Assembly - Low Flow Hunter ICZ-101-40I" ICV Globe Valve with 1" HY100 filter system. Pressure Regulation: 40psi. Flow Range: 2 GPM to 20 GPM. 150 mesh stainless steel screen.	7	
	Area to Receive Drip Emitters Netafim SPCV Single Outlet Pressure Compensating Drip Emitter, 1.5psi Internal Check Valve, with Self-Piercing Barb. Blue= 0.5gph, Black= 1.0gph, Red= 2.0gph.	25,325 s.f.	
	Emitter Notes: 0.5 GPH emitters (1 assigned to each 1 gal plant)	180	
	0.5 GPH emitters (2 assigned to each 5 gal plant)	284	
	0.5 GPH emitters (4 assigned to each 15 & 15 gal plant)	28	
	0.5 GPH emitters (4 assigned to each 15 & 15, 6-8' Ht. plant)	16	

SYMBOL	MANUFACTURER/MODEL/DESCRIPTION	QTY	DETAIL
	Electric Remote Control Valve Assembly Hunter ICV-G - 1", 1-1/2", 2", and 3" Plastic Electric Remote Control Valves, Globe Configuration, with NPT Threaded Inlet/Outlet, for Commercial/Municipal Use.	19	
	Quick Coupler Valve Assembly Hunter HQ-3RC, yellow rubber cover, red brass and stainless steel, with 3/4" NPT inlet, 1-piece body.	4	
m.v.	Master Valve Assembly 2" Hunter ICV-G - 1", 1-1/2", 2", and 3" Plastic Electric Master Valve, Globe Configuration, with NPT Threaded Inlet/Outlet, for Commercial/Municipal Use.	2	
D	Drain Valve Assembly 3/4" slotted valve with brass or galvanized nipples.	4	
A	Controller Assembly Hydro Point WTOXR-C-30-CH2, 18-gauge anodized, pre-assembled, aluminum back panel retrofits into any front entry pedestal 18" w x 36" h x 12" d or larger. (e.g., VIT Strongbox Enclosure Pedestal SB-1855 series)	1	
F.S	Flow Sensor Assembly Hunter HFS-100, Flow Sensor for use with ACC controller, 1" Schedule 40 Sensor Body, 24 VAC, 2 amp.	2	
F	Filter Assembly Amiad 2-OL-MSIG- Steel Screen, Amiad 2" Mini Sigma, On-Line Self-Cleaning Filter, BSPT or NPT Inlet-outlet. Stainless Steel Weavewire Screen Element. ADI-P Bluetooth Range Controller. Maximum working pressure 116psi. Included in the assembly is a solid aluminum Strong Box Enclosure (SBBC 40ALHP).	2	
POC #1 (FOR FUTURE PARK)	Point of Connection 2" Location approximate, design pressure is 75 PSI. If different contact landscape architect.	1	
POC #2	Point of Connection 2" Location approximate, design pressure is 75 PSI. If different contact landscape architect.	1	
POC #3	Point of Connection 2" Location approximate, design pressure is 75 PSI. If different contact landscape architect.	1	
	Irrigation Lateral Line: PVC Schedule 40	5,938 l.f.	
	Irrigation Mainline: PVC Schedule 40	1,801 l.f.	
	Pipe Sleeve: PVC Schedule 40 Sleeve size 2x size of pipe being sleeved.	352.1 l.f.	

Valve Callout
Valve Number
Valve Flow

flagship homes
1250 East 200 South, Ste. 1D
Lehi | Utah | 84043

STATE OF UTAH
BRONSON R. ... LICENSED LANDSCAPE ARCHITECT
1/31/2022

call **811** or visit www.bluestakes.org before you dig to have all utilities located and marked

SANTAQUIN ESTATES

LANDSCAPE PLANS

Main Street & 900 East . Santaquin . Utah

JANUARY 2022

LANDSCAPE irrigation overview

L1.0

MATCHLINE A (SEE SHEET L1.2 VIEWPORT A)

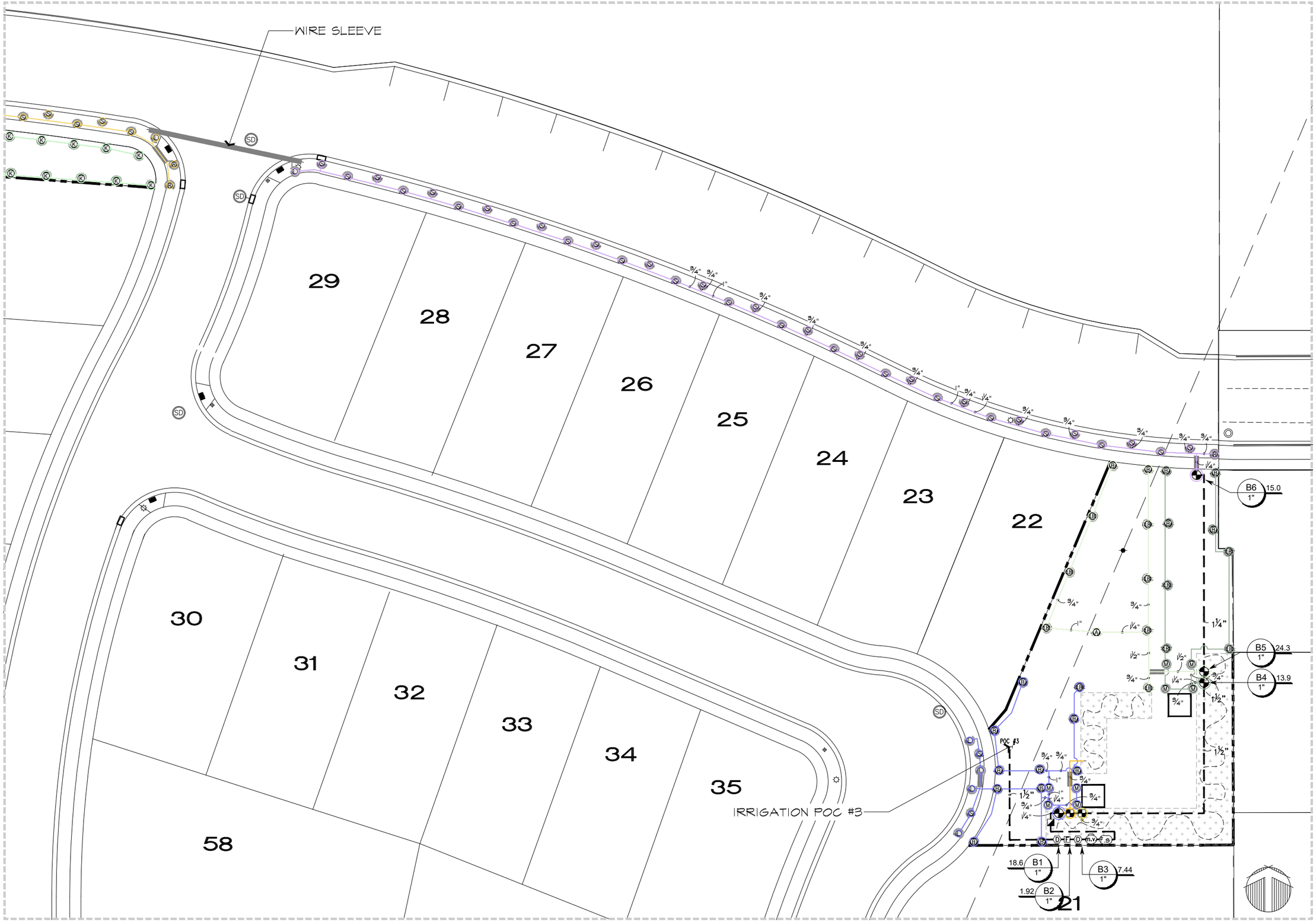

flagship homes

1250 East 200 South, Ste. 1D
Lehi | Utah | 84043

STATE OF UTAH
LICENSED LANDSCAPE ARCHITECT
1/31/2022

call **811** or visit www.bluestakes.org before you dig to have all utilities located and marked

SANTAQUIN ESTATES

LANDSCAPE PLANS

Main Street & 900 East . Santaquin . Utah

JANUARY 2022

LANDSCAPE irrigation plan

L1.1

MATCHLINE B (SEE THIS SHEET VIEWPORT A)

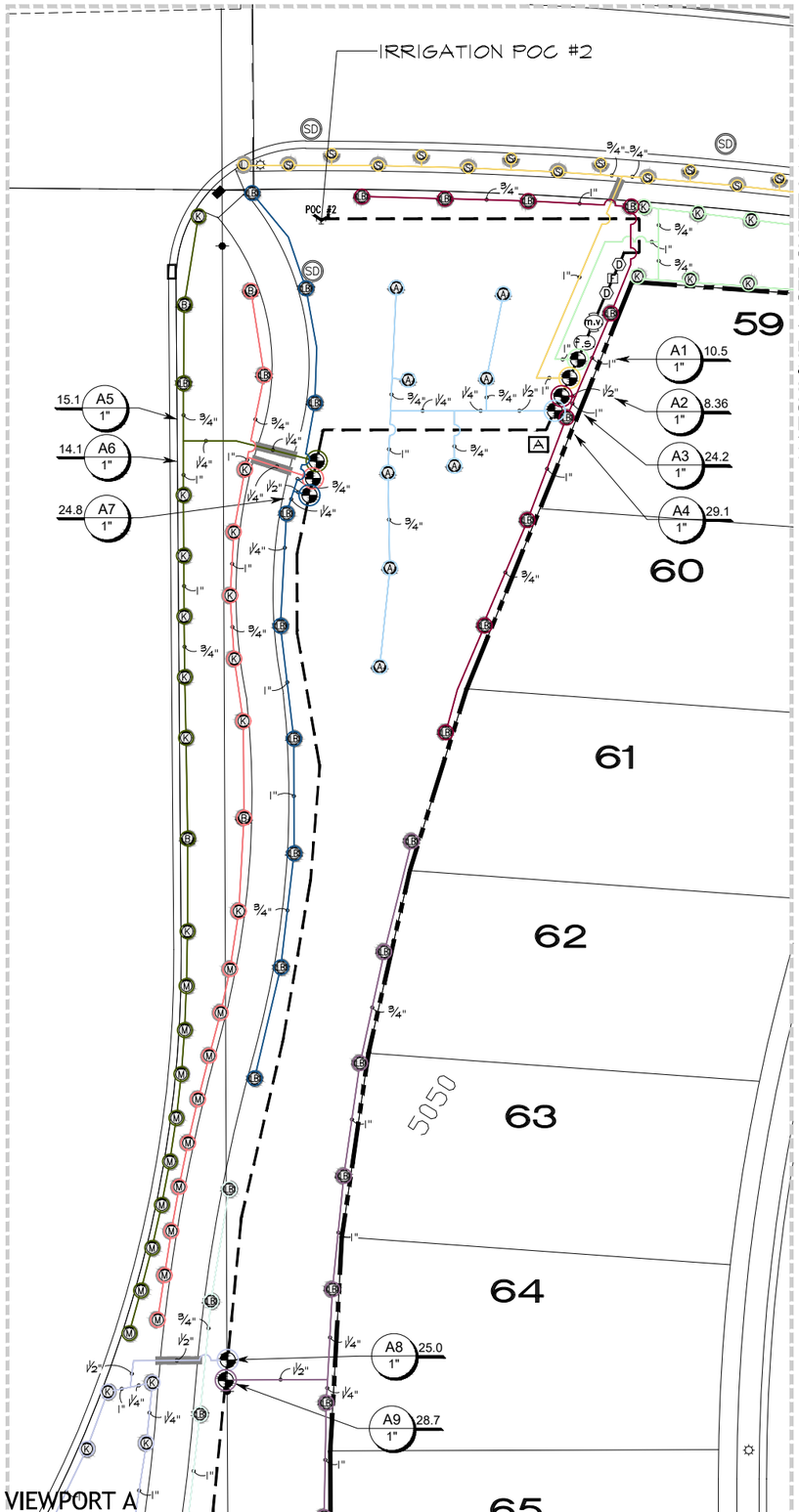

VIEWPORT A
MATCHLINE B (SEE THIS SHEET VIEWPORT B)

MATCHLINE A (SEE SHEET L1.1)

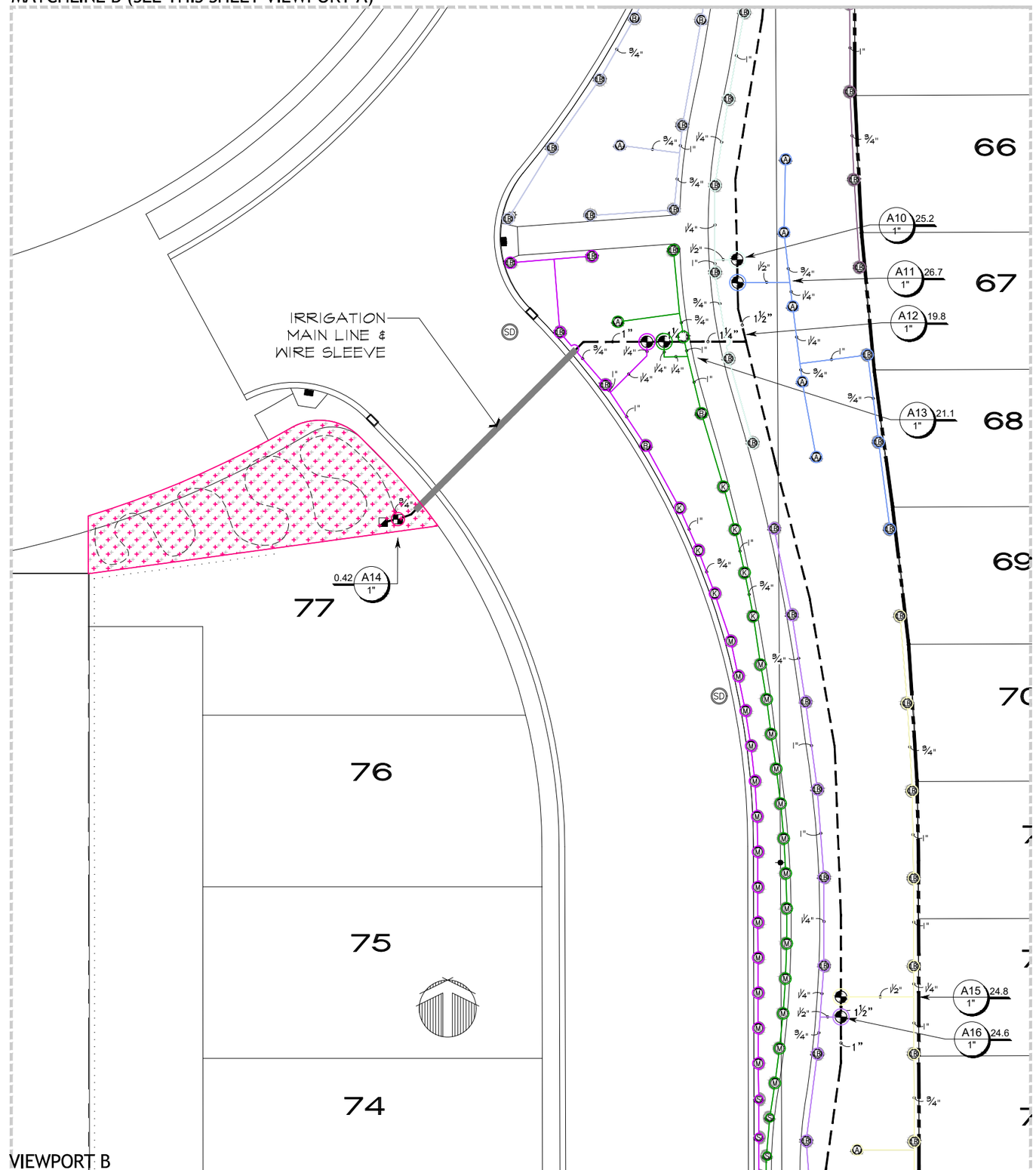

VIEWPORT B
MATCHLINE C (SEE SHEET L1.3 VIEWPORT A)

flagship homes
1250 East 200 South, Ste. 1D
Lehi | Utah | 84043

STATE OF UTAH
BRONSON R. ZUNDEL
LICENSED LANDSCAPE ARCHITECT
1/31/2022

call **811** or visit www.bluestakes.org
before you dig to have all utilities
located and marked

SANTAQUIN ESTATES

LANDSCAPE PLANS

Main Street & 900 East . Santaquin . Utah

JANUARY 2022

LANDSCAPE
irrigation plan

L1.2

MATCHLINE C (SEE SHEET L1.2 VIEWPORT B)

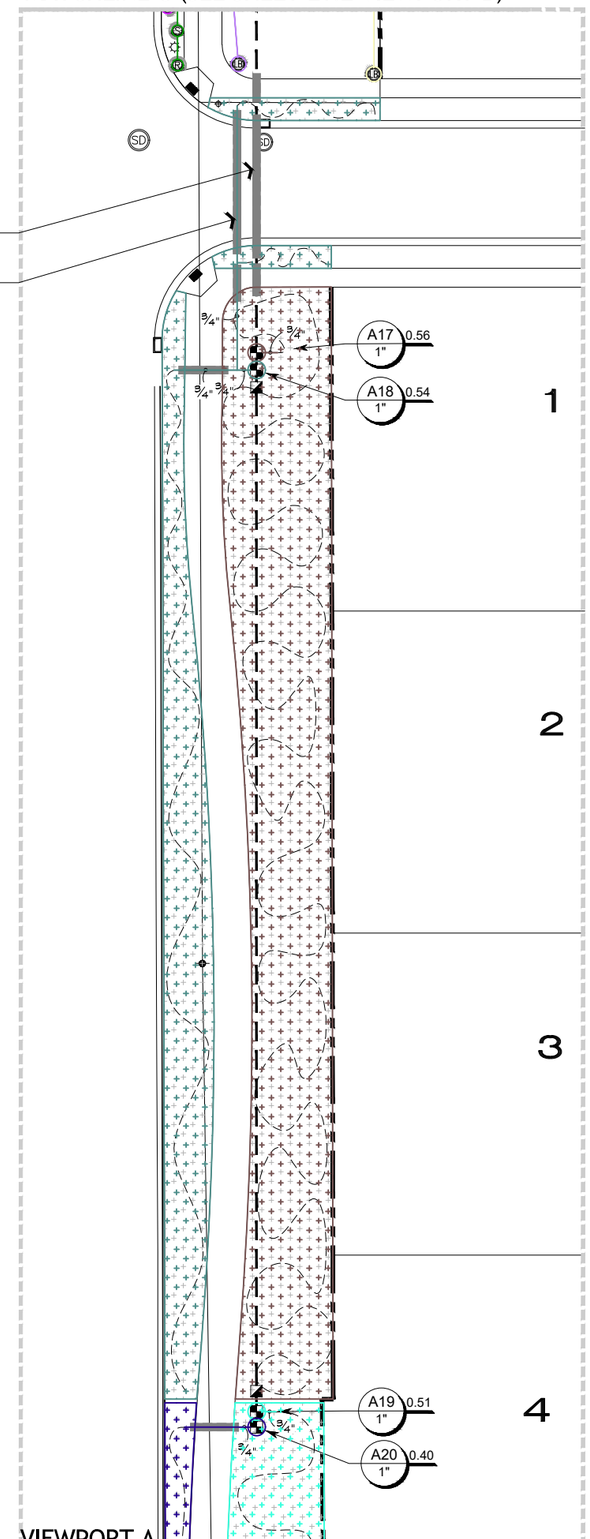

VIEWPORT A

MATCHLINE D (SEE THIS SHEET VIEWPORT B)

MATCHLINE D (SEE THIS SHEET VIEWPORT A)

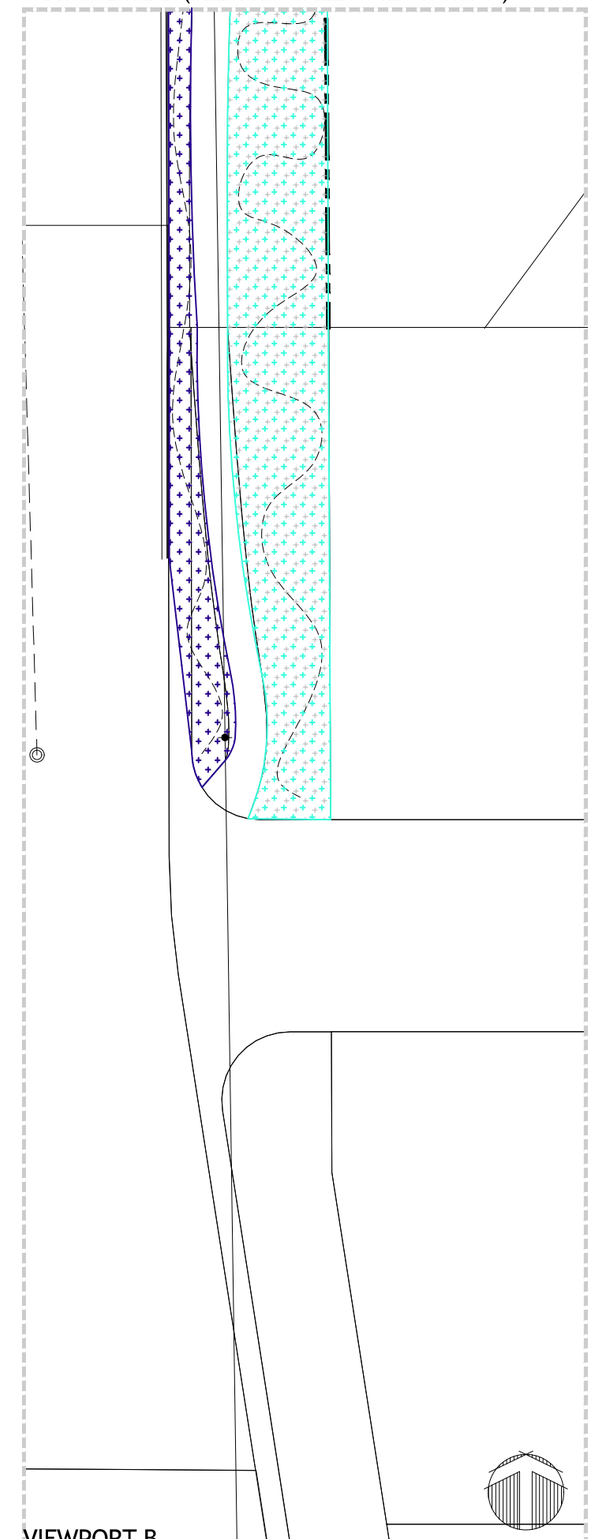

VIEWPORT B

flagship homes

1250 East 200 South, Ste. 1D
Lehi | Utah | 84043

STATE OF UTAH
BRONSON
1/31/2022
LICENSED LANDSCAPE ARCHITECT

call **811** or visit www.bluestakes.org
before you dig to have all utilities
located and marked

SANTAQUIN ESTATES

LANDSCAPE PLANS

Main Street & 900 East . Santaquin . Utah

JANUARY 2022

LANDSCAPE
irrigation plan

L1.3

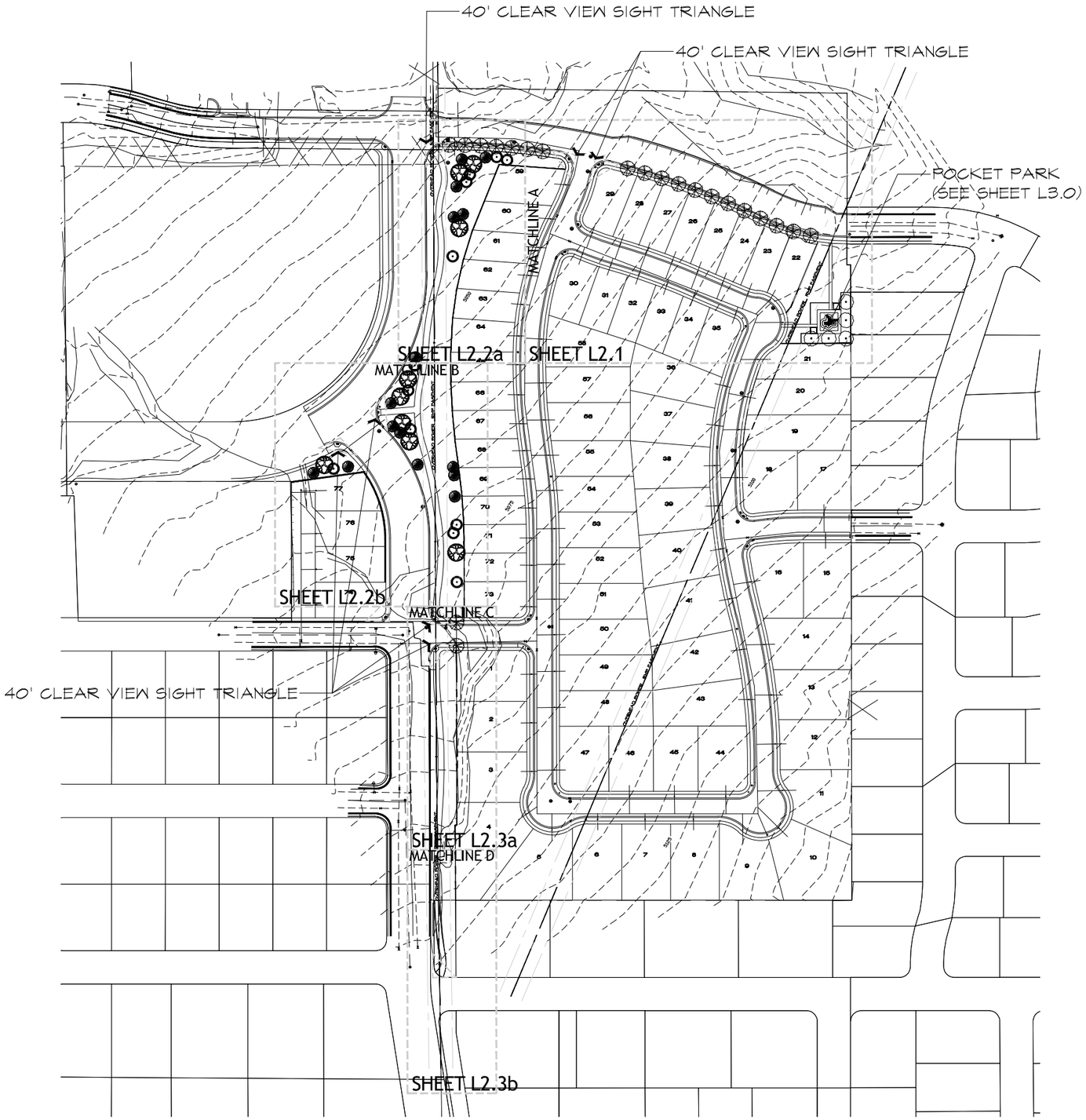

PLANT SCHEDULE

TREES	BOTANICAL / COMMON NAME	CONT	CAL	SIZE	QTY
	Acer x freemanii 'Jeffered' / Autumn Blaze Maple Mature Size: H50' W40'	B & B	2\"Cal		5
	Gleditsia triacanthos 'Skyline' / Skyline Honey Locust Mature Size: H45' W35'	B & B	2\"Cal		21
	Picea pungens / Blue Phase Colorado Spruce Mature Size: H30-60' W10-20'	B & B		6-8' Ht.	15
	Pinus nigra / Austrian Black Pine Mature Size: H50-60' W20-40'	B & B		6-8' Ht.	12
	Platanus x acerifolia / London Plane Tree Mature Size: H40-60' W30-40'	B & B		6-8' Ht.	9
SHRUBS	**BOTANICAL / COMMON NAME**	**SIZE**			
	Rhus aromatica 'Gro-Low' / Gro-Low Fragrant Sumac Mature Size: H3' W8'	5 gal			29
	Rosa shrub 'Knock Out' / Knock Out Rose Mature Size: H3' W3'	5 gal			113
	Stipa tenacissima / Mexican Feather Grass Mature Size: H2' W2'	1 gal			71
ANNUALS/PERENNIALS	**BOTANICAL / COMMON NAME**	**SIZE**			
	Nepeta x faassenii 'Walkers Low' / Walkers Low Catmint Mature Size: H24-30\" W36\"	1 gal			15
GRASSES	**BOTANICAL / COMMON NAME**	**SIZE**			
	Calamagrostis x acutiflora 'Karl Foerster' / Feather Reed Grass Mature Size: H3-5' W2-3'	1 gal			31
	Pennisetum alopecuroides 'Hamein' / Hamein Dwart Fountain Grass Mature Size: H2' W3'	1 gal			63
GROUND COVERS	**BOTANICAL / COMMON NAME**	**CONT**			
	Planting Bed Area Mulch (4" depth) 2-4" decorative cobble rock mulch. Submit sample for approved by Santaquin City prior to placing. Average depth of four inches (4"). Install Mirafi 600 (or approved equal) fabric prior to installation of mulch.	mulch			24,934 sf
	Play Area Surfacing / 12" min. depth of Engineered Wood Fiber	None			900 sf
	Turf Sod Bluegrass / Kentucky Bluegrass	sod			71,447 sf

flagship homes
1250 East 200 South, Ste. 1D
Lehi | Utah | 84043

STATE OF UTAH
BRONSON R. ...
LICENSED LANDSCAPE ARCHITECT
1/31/2022

call **811** or visit www.bluestakes.org
before you dig to have all utilities
located and marked

SANTAQUIN ESTATES

LANDSCAPE PLANS

Main Street & 900 East . Santaquin . Utah

JANUARY 2022

LANDSCAPE
planting
overview

L2.0

MATCHLINE A (SEE SHEET L2.2 VIEWPORT A)

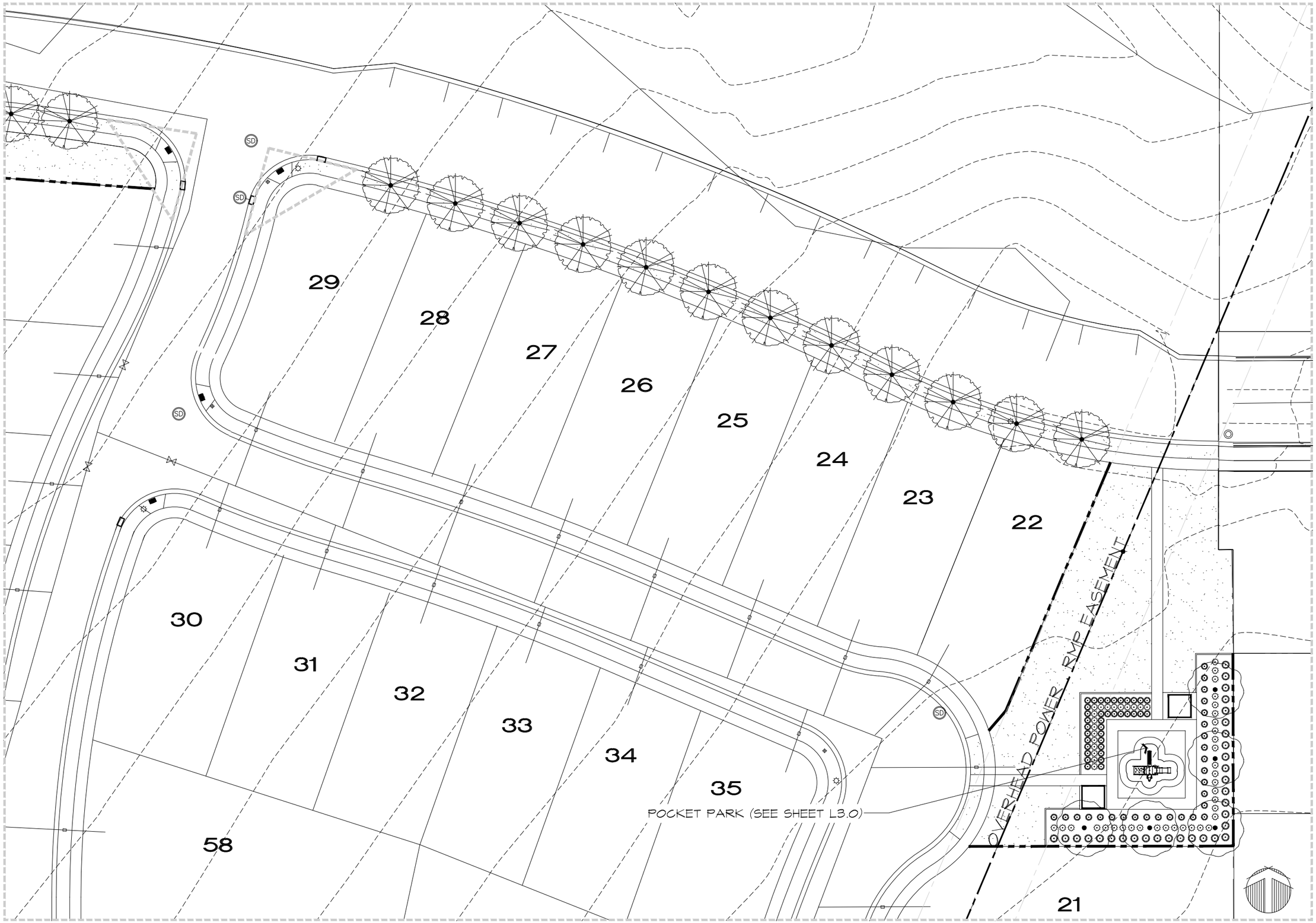

flagship homes

1250 East 200 South, Ste. 1D
Lehi | Utah | 84043

STATE OF UTAH
BRONSON
LICENSED LANDSCAPE ARCHITECT
1/31/2022

call **811** or visit www.bluestakes.org
before you dig to have all utilities
located and marked

SANTAQUIN ESTATES

LANDSCAPE PLANS

Main Street & 900 East . Santaquin . Utah

JANUARY 2022

LANDSCAPE
planting plan

L2.1

MATCHLINE B (SEE THIS SHEET VIEWPORT A)

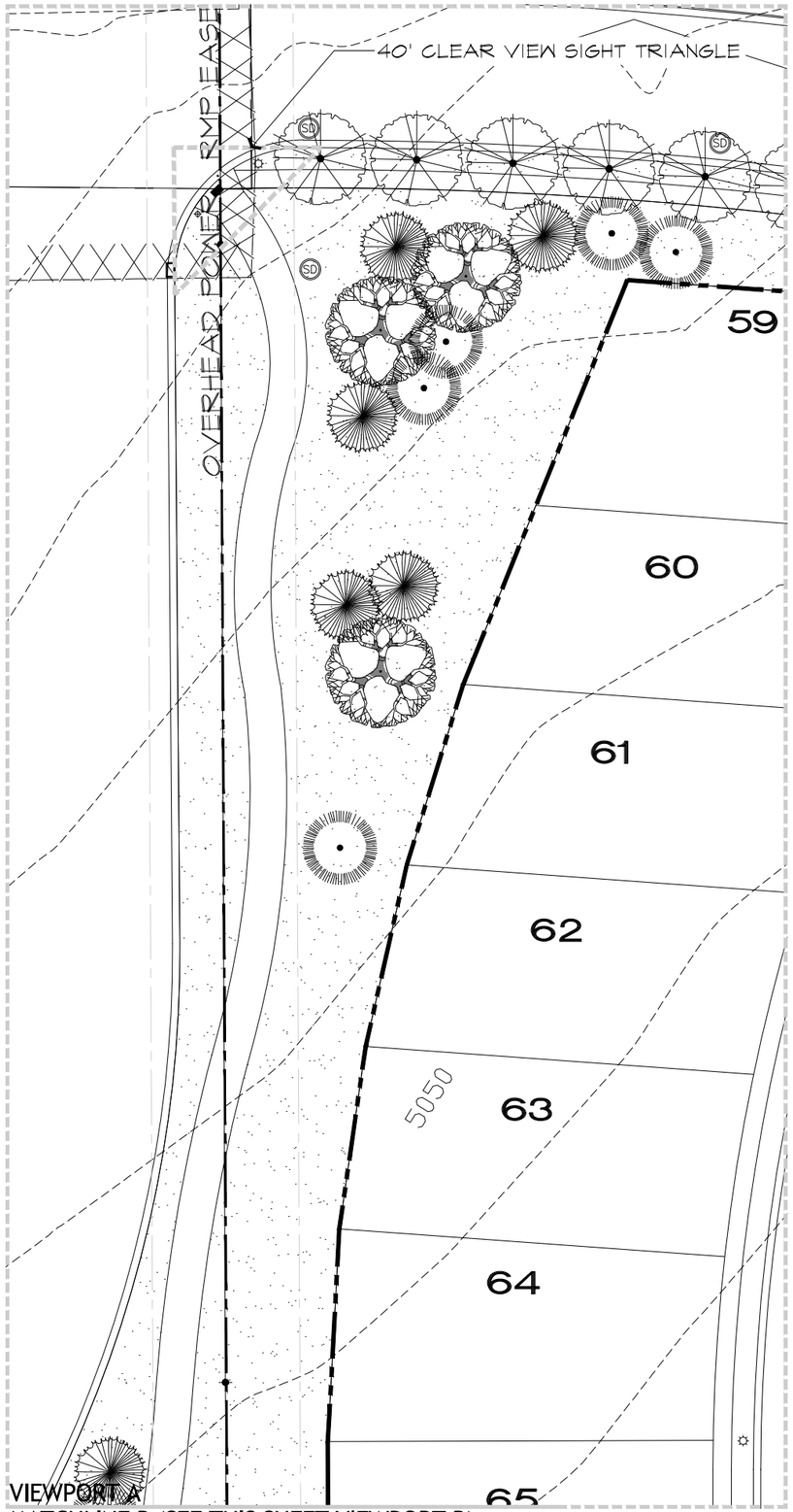

VIEWPORT A

MATCHLINE B (SEE THIS SHEET VIEWPORT B)

MATCHLINE A (SEE SHEET L2.1)

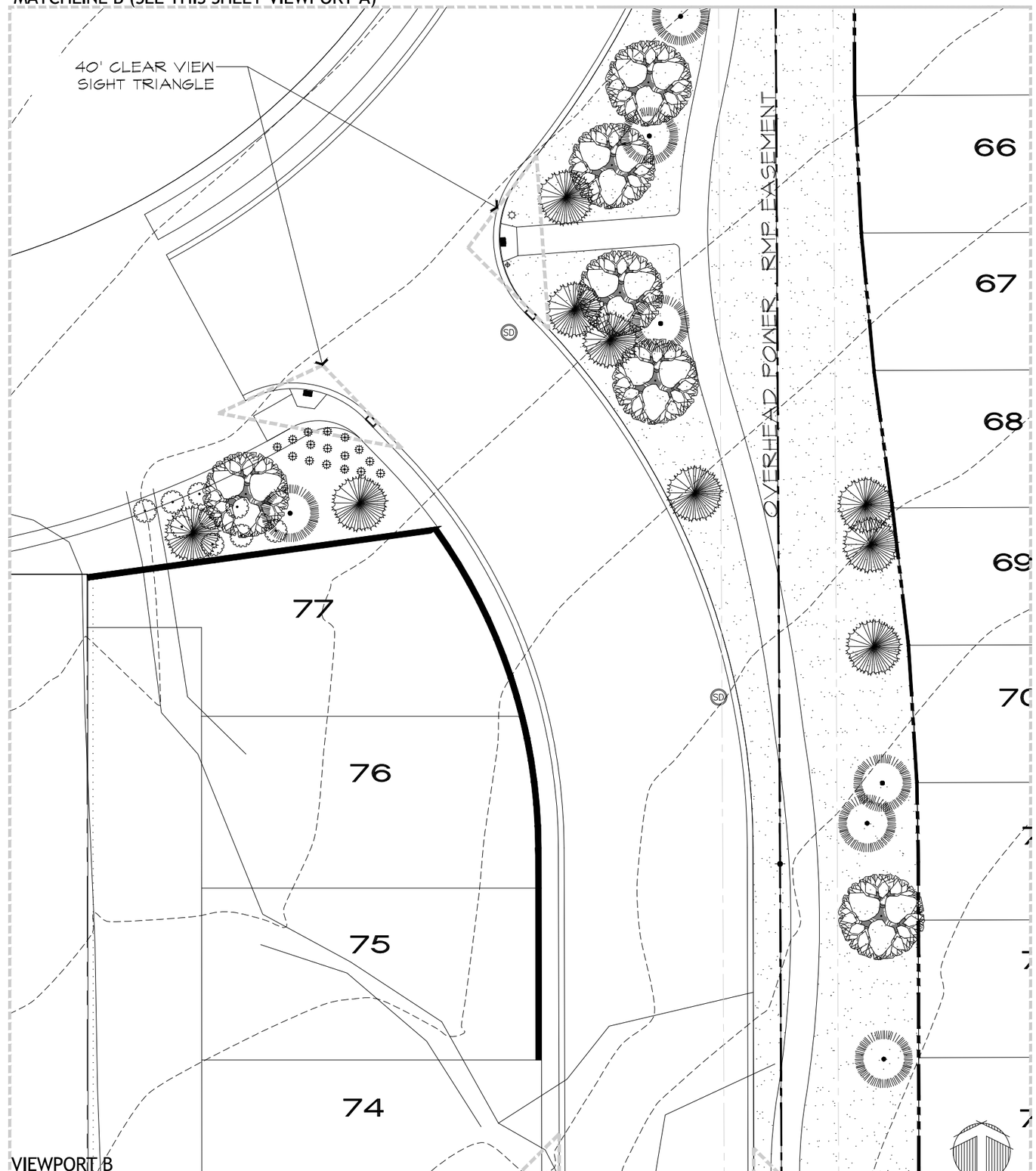

VIEWPORT B

MATCHLINE C (SEE SHEET L2.3 VIEWPORT A)

flagship homes

1250 East 200 South, Ste. 1D
Lehi | Utah | 84043

STATE OF UTAH
RONSON K. ...
LICENSED LANDSCAPE ARCHITECT
1/31/2022

call **811** or visit www.bluestakes.org
before you dig to have all utilities
located and marked

SANTAQUIN ESTATES

LANDSCAPE PLANS

Main Street & 900 East . Santaquin . Utah

JANUARY 2022

LANDSCAPE
planting plan

L2.2

MATCHLINE C (SEE SHEET L2.2 VIEWPORT B)

MATCHLINE D (SEE THIS SHEET VIEWPORT A)

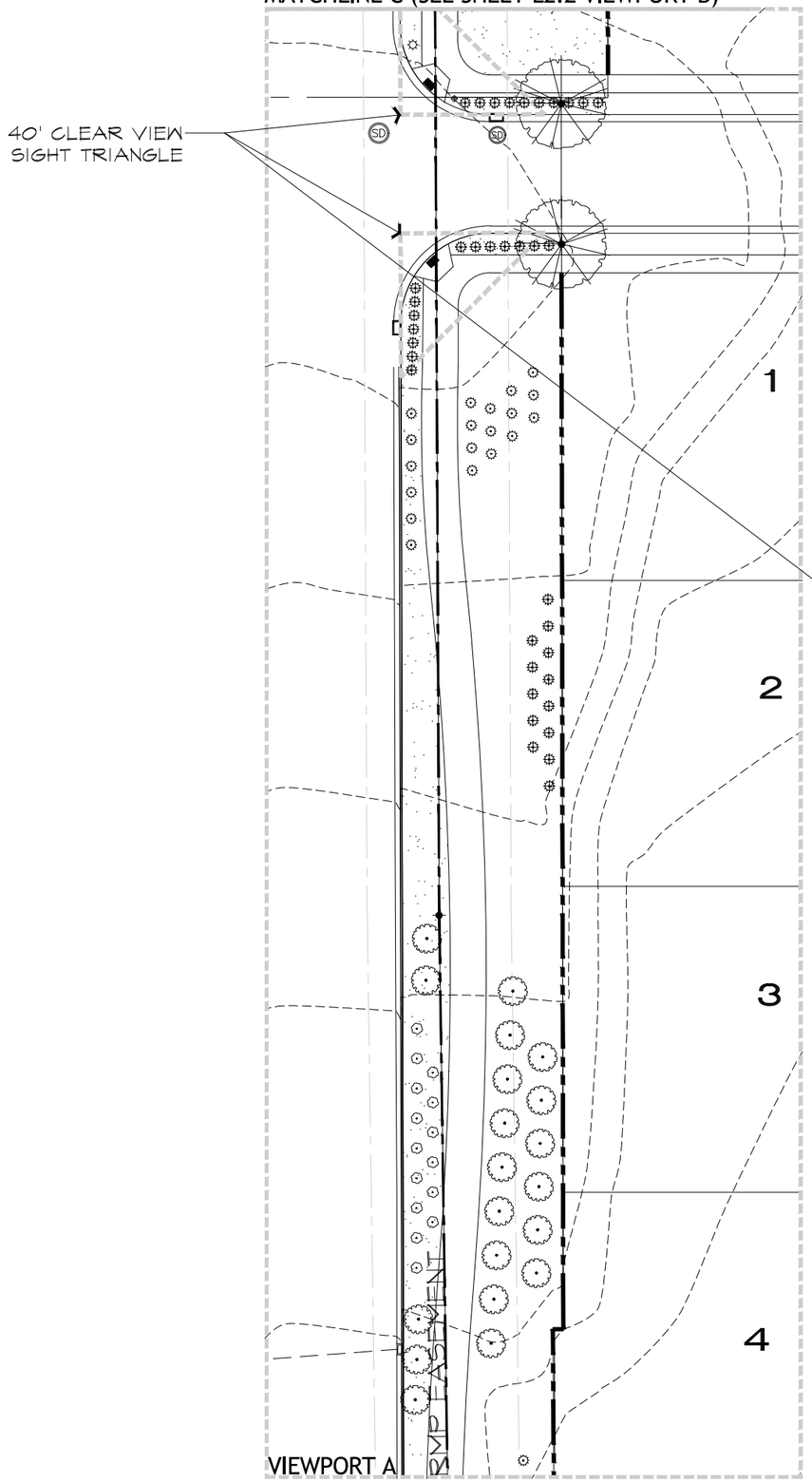

VIEWPORT A

MATCHLINE D (SEE THIS SHEET VIEWPORT B)

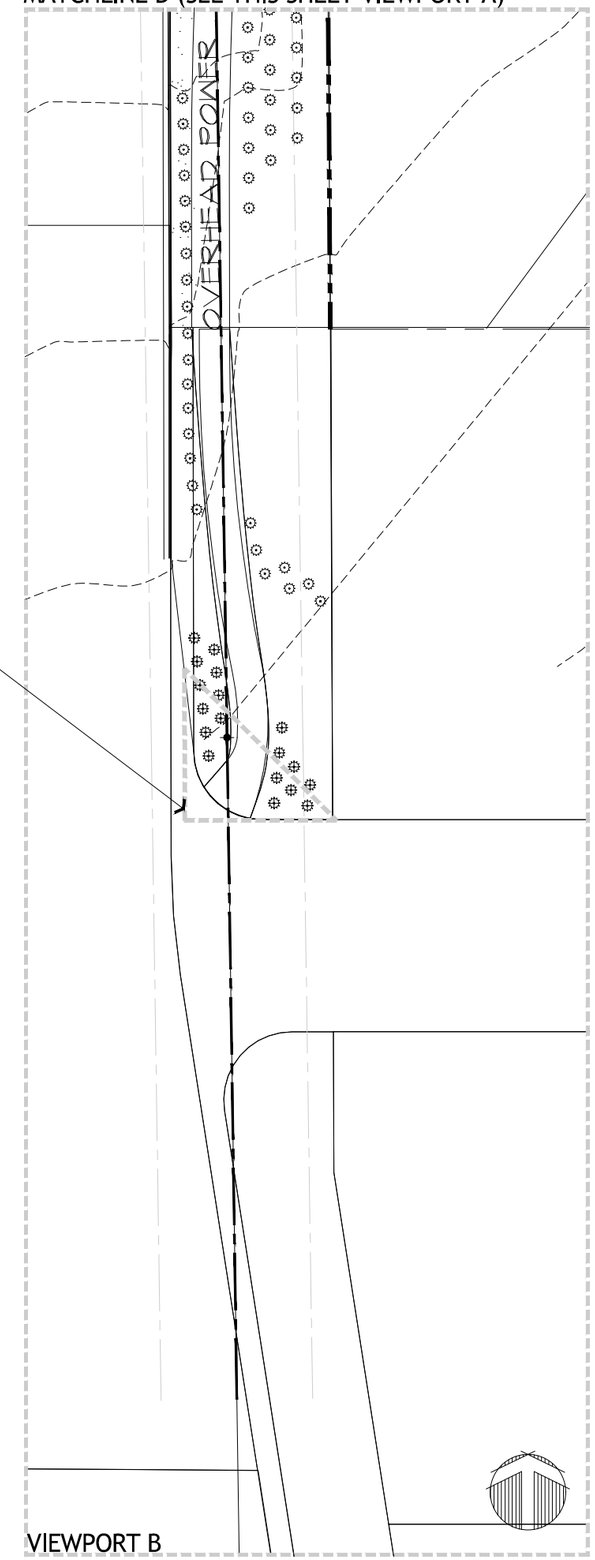

VIEWPORT B

flagship homes

1250 East 200 South, Ste. 1D
Lehi | Utah | 84043

STATE OF UTAH
BRONSON R. ... LICENSED LANDSCAPE ARCHITECT
1/31/2022

call **811** or visit www.bluestakes.org before you dig to have all utilities located and marked

SANTAQUIN ESTATES

LANDSCAPE PLANS

Main Street & 900 East . Santaquin . Utah

JANUARY 2022

LANDSCAPE planting plan

L2.3

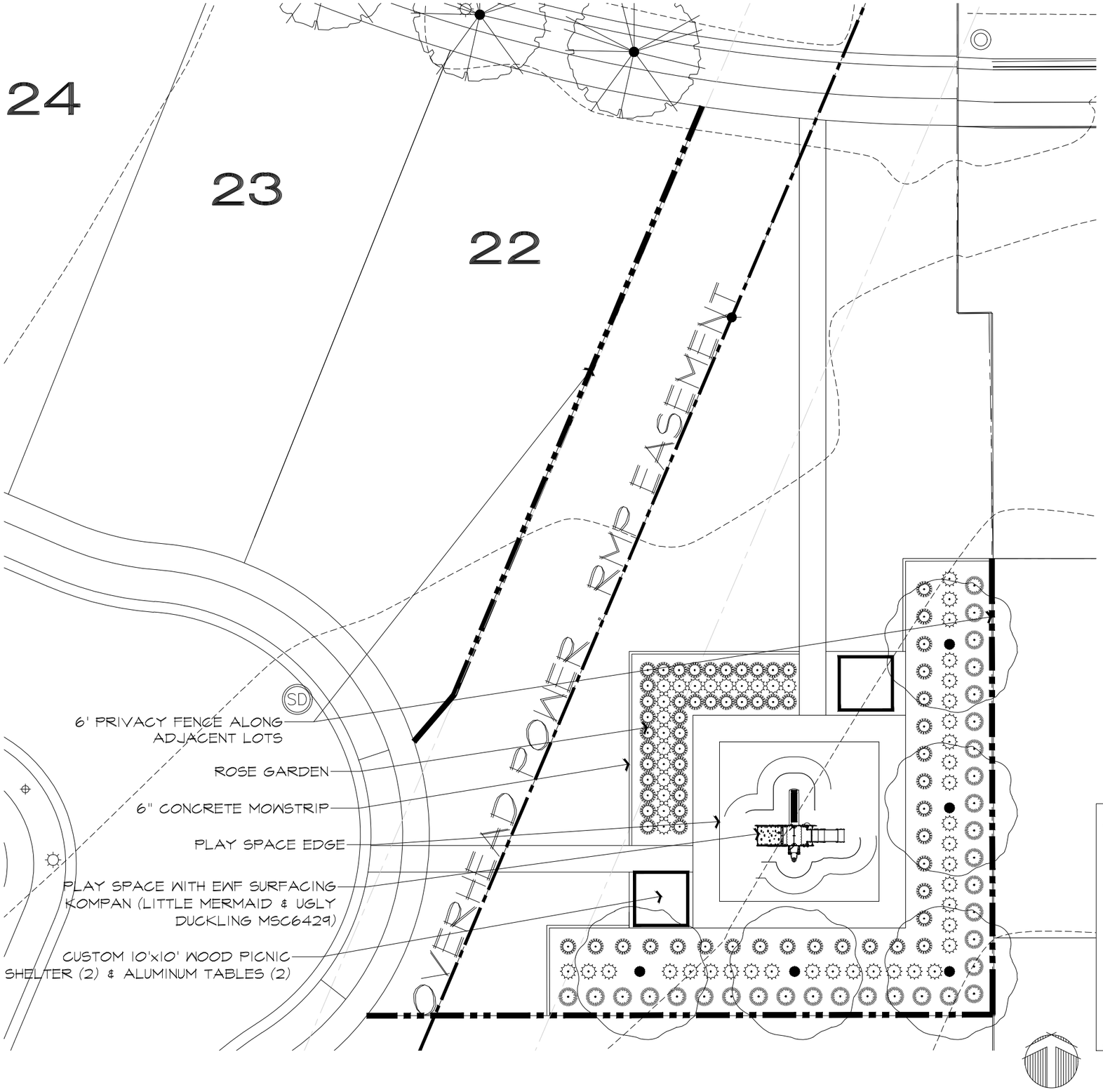

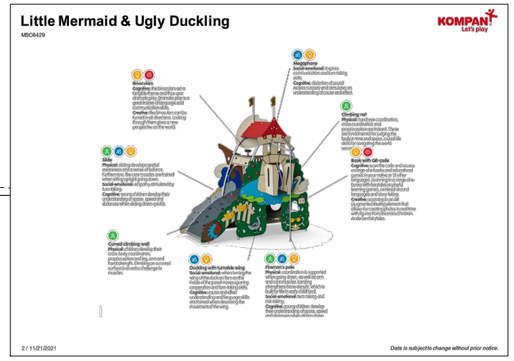

flagship homes
1250 East 200 South, Ste. 1D
Lehi | Utah | 84043

STATE OF UTAH
BRONSON R. TAYLOR
LICENSED LANDSCAPE ARCHITECT
1/31/2022

call **811** or visit www.bluestakes.org before you dig to have all utilities located and marked

SANTAQUIN ESTATES

LANDSCAPE PLANS

Main Street & 900 East . Santaquin . Utah

JANUARY 2022

LANDSCAPE amenity plan

L3.0

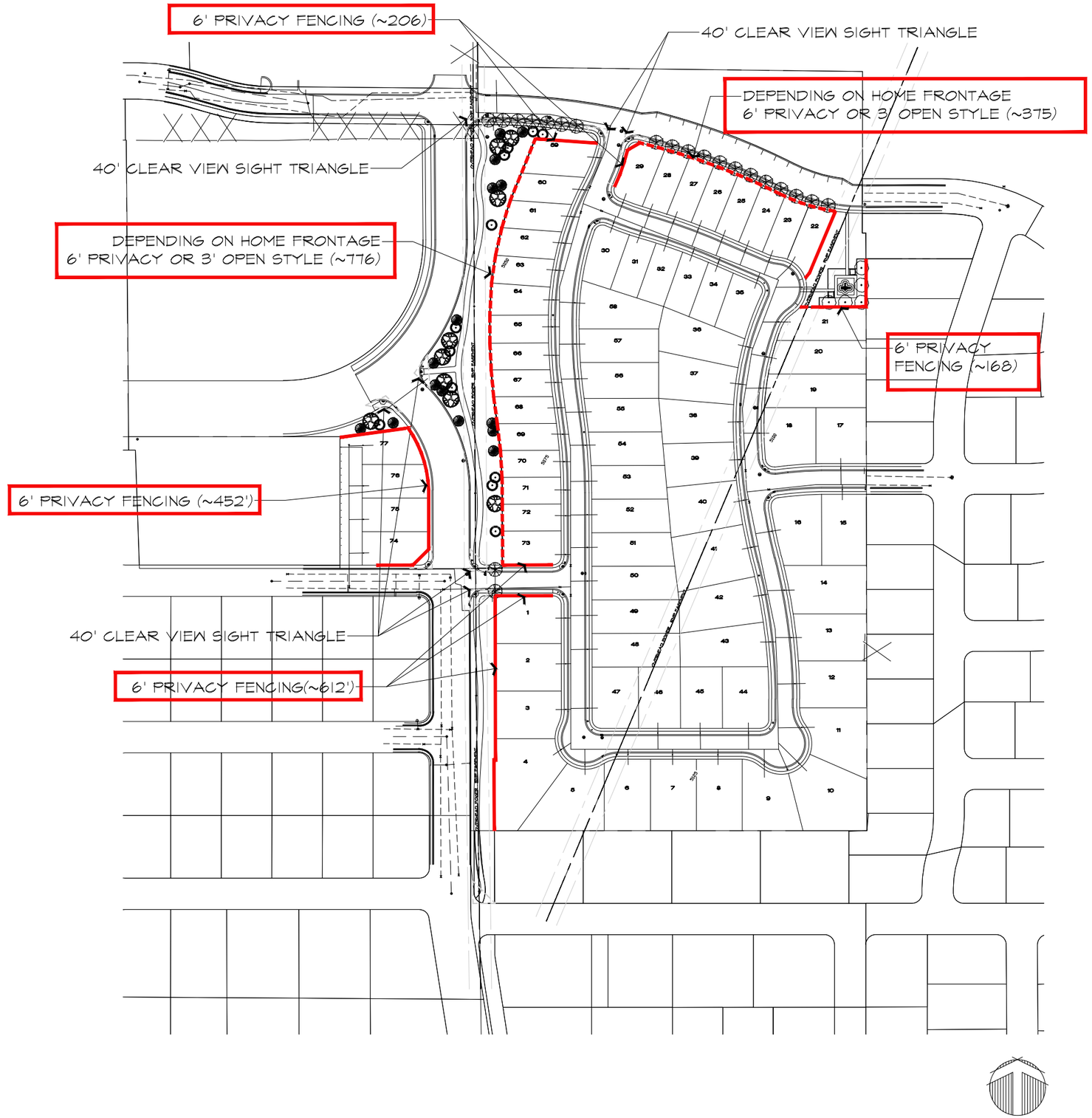

flagship homes

1250 East 200 South, Ste. 1D
Lehi | Utah | 84043

STATE OF UTAH
BRONSON R. ...
LICENSED LANDSCAPE ARCHITECT
1/31/2022

call **811** or visit www.bluestakes.org
before you dig to have all utilities
located and marked

SANTAQUIN ESTATES

LANDSCAPE PLANS

Main Street & 900 East . Santaquin . Utah

JANUARY 2022

LANDSCAPE
fencing overview

L4.0

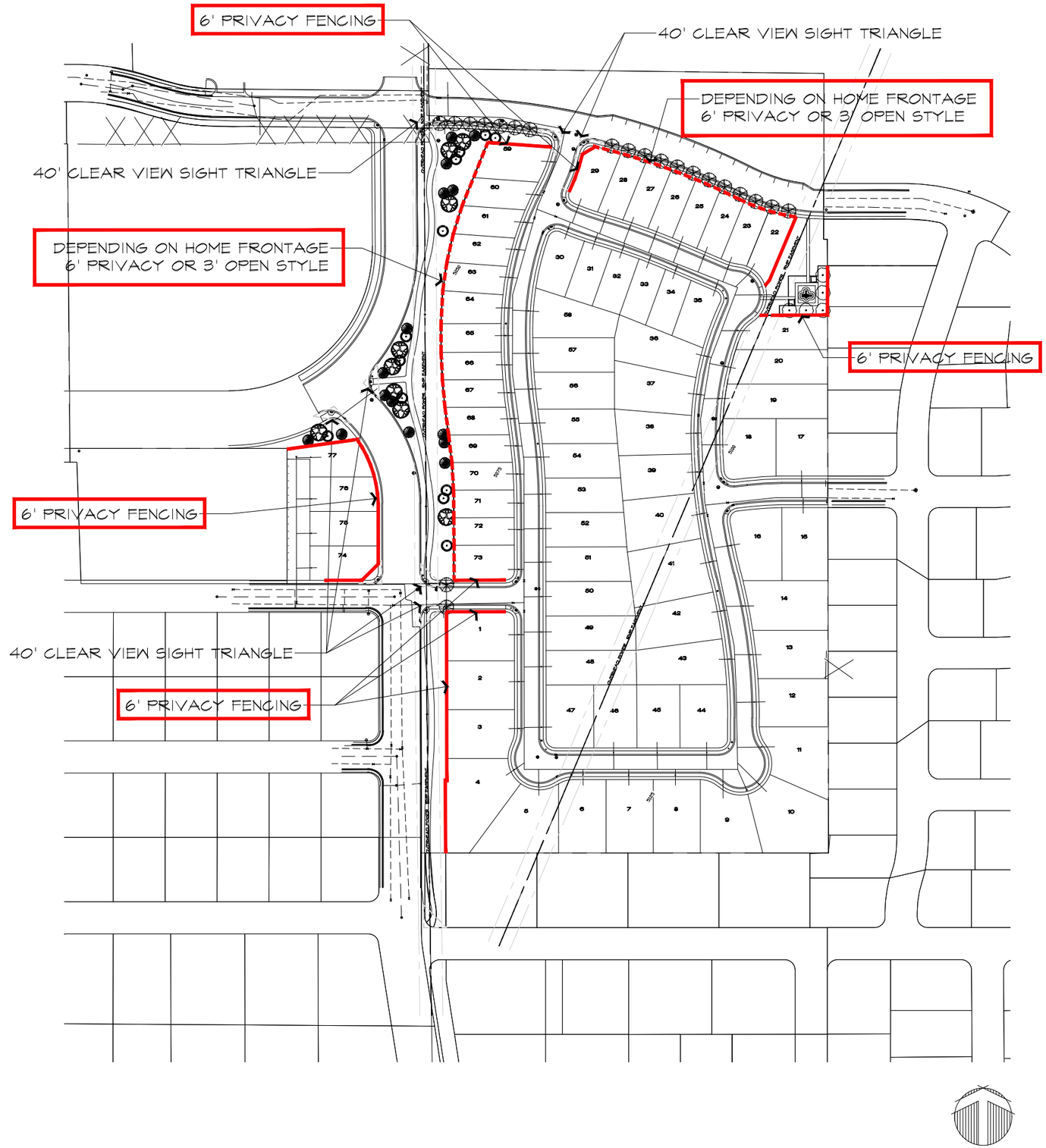

flagship homes

1250 East 200 South, Ste. 1D
Lehi | Utah | 84043

STATE OF UTAH
FRONSOM R.
LICENSED LANDSCAPE ARCHITECT
1/7/2022

preliminary plans
not for construction

call **811** or visit www.bluestakes.org
before you dig to have all utilities
located and marked

SANTAQUIN ESTATES

LANDSCAPE PLANS

Main Street & 900 East . Santaquin . Utah

JANUARY 2022

LANDSCAPE
fencing overview

L4.0