General Specs:
1. All material and work shall be finished and completed in strict accordance with all provisions of the applicable adopted model building code, amendments, ordinances and all referenced standards.
2. Under no conditions shall structural member be removed, cut, relocated, or otherwise damaged without engineer's written consent.
3. Fire-stopping system shall be installed to resist the spread of fire, smoke, and gases according to all applicable codes.
4. General Contractor to provide miscellaneous blocking and framing as required to support facing materials, fixtures, specialty items, and trim.
5. Back filling of holes around column shall be done with the excavated soil and compacted continuously as the hole is being filled to minimize settling . It is normal and expected that settling will occur and addition materials will need to be added to level the holes. If gravel is to be used as back fill, it must be a well-graded, crushed, granular aggregate such as IN-53's or IL-CA-6.
6. Interior finishes shall have flame spread and smoke developed indexes that are less than or equal to what the governing building code allows.
7. Purchaser responsible for holding all trades accountable for maintaining / repairing any penetrations through insulation and/or barrier(s) to their original uncompromised state.

Wood Specs:
1. Design and construction of all structural wood members shall be in accordance with the current or referenced issue of American Wood Council-NDS with supplement.
2. Minimum grades of all wood members shall be as follows unless noted otherwise:
   Girts - (2X4) MSR1650 SPF - (2x6) #2 SPF or better
   Purlins, studs & bracing - (2x4) #2 SPF or better - (2x6) #2 SPF or better
   Columns - (2x6) #1 SYP treated & non-treated
   Columns - (2x8) #1 SYP treated & MSR2400 SYP non-treated
   Truss webs, chords, headers, joist, rafters & all other framing material
      #1 or #2 SYP - (2x4 & 2x6)
      MSR 2400 SYP - (2x8, 2x10 & 2x12)
      2.0E F_b = 3,100psi - (LVL)
3. All members in contact with soil or concrete shall be preservative-treated to min 0.8 #/c.f. retention CCA for columns/posts and UC4 Ground Contact for all others.
4. Plywood and OSB, when shown on construction documents shall be APA rated.
5. Deflections of wood members shall be limited to the model building code-specified minimums.

Fastener Specs:
1. Nails shall be called out on drawings by penny weight. The following fasteners & specs have been used in design & shall be used in construction:
   - 10d x 1 ½" - .148" x 1 ½"
   - 10d - .120" x 2 ¾" threaded pneumatic
   - 16d - .162" x 3 ½" common
   - 16d R.S. - .148" x 3 ½" threaded hardened-steel
2. Substitution of fasteners shall not be permitted without the written consent of the design engineer except as follows:
   - 10d nails may be used to replace 16d or 16d R.S. nails where specified at a 2:1 ratio.
   - 16d or 16d R.S. nails may be used to replace 10d nails where specified at a 2:3 ratio.
3. Unless noted otherwise all nails shall be evenly distributed over the connection area, placed in an orderly straight pattern, and shall be driven into the center of the narrow face of 2x members when applicable. Edge distances, end distances and spacing for nails shall be sufficient to prevent splitting of the wood. Nails that do not make a solid connection shall be compensated for by adding extra nails that meet the required specs.
4. Fasteners in pressure treated lumber must be hot-dipped galvanized, stainless steel or tested for that purpose.
5. All light-gauge metal connectors shall be fastened per manufacturer's specs.
6. Fasteners called out on the drawings shall be as follows:
   - STRUCTURAL-X5 - ¼" x 1 ½" GRK R55 or equal
   - STRUCTURAL-5 - ⅜" x 2 ½" GRK R55 or equal
   - STRUCTURAL-M - ⅜" x 4" GRK R55 or equal
   - STRUCTURAL-L - ⅜" x 6" GRK R55 or equal
   - PURLIN SCREW - ⅜" x 6" FASTENMASTER HEADLOK or equal
   - I-BEAM SCREW - ¼-20 x 2 ¾" IMPAX WOOD TO METAL SELF-DRILLER or equal
   - CONCRETE SCREW - ¼ x 2 ¾" TAPCON or equal

Sheet Metal Specs:
1. Roof material: Pre-finished galvanized or galvalume panels, colors as selected by owner. Panels shall be min. 29 gauge.
2. Fasteners: Stainless steel capped #9 carbon steel screw with an integral washer, EPDM seal & finish to match sheet metal color.
3. Install fasteners in pattern shown in drawings.
4. Gutters and down spouts shall be 29 gauge, pre-finished, color as selected by owner.
5. Metal roofing & siding diaphragm strength shall be per FBi Buildings Inc. proprietary specs.

Finishes (when applicable):
1. Drywall installation must take into consideration the fact that there will be unavoidable truss deflections. Proper usage of deflection clips and fastener patterns must be utilized to reduce cracking potential.
2. Interior finishes shall have flame spread and smoke developed indexes that are less than or equal to what the governing building code allows.

Insulation & Vapor Retarder (when applicable):
1. Ceiling insulation shall meet or exceed R-values shown on drawings. All indicated spaces shall be completely filled to avoid any gaps or voids.
2. Place visqueen vapor retarder on warm side of insulation and secure in place. Seal joints and holes around penetrations with tape.
3. Below-grade insulation shall be rigid foam insulation and shall meet the requirements of the Energy Code Compliance Report, if applicable. See detail on sheet 650.
4. Insulation materials must meet flame spread and smoke development ratings of the applicable codes
5. Insulation shall be compliant with all provisions of the applicable code and Energy Compliance Reports if applicable. Vapor retarders shall be placed on warm side of insulation and have all penetrations properly sealed.
6. Building interiors shall be separated from foam plastic insulation with approved thermal barriers in accordance with the applicable codes.

Supplemental Specs:
1. General Contractor shall comply with the current National Fire Protection Association regulations as set forth by local fire marshal.
2. Fire extinguishers shall be provided according to the requirements of the governing authorities.
3. Finished buildings shall comply with the adopted accessibility code.
4. Fire-resistant rated walls, fire blocking, and draftstops shall not be compromised, lessening their intended usefulness in the structure.

Accessibility/ADA Specs:
1. Ext doors shall be operable from the inside without the use of a key or special knowledge or effort.
2. Door hardware shall be capable of operation with the use of one (1) hand and shall not require tight pinching, tight grasping or twisting of the wrist to operate. Thumb turn deadbolts are prohibited; lever or paddle deadbolt releases are acceptable. Door threshold shall not exceed one-half inch (1/2") in height, thresholds exceeding one-quarter inch (1/4") in height shall have a 1:2 bevel. Door closures shall meet opening force and sweep period requirements.
3. Exterior doors to have ADA-compliant hardware for exiting requirements.
4. Handicap entrances shall have thresholds that meet the requirements of the appropriate accessibility code
5. Minimum 48" x 48" landing required on both sides of egress doors.

COPYRIGHT FBi Buildings, Inc.

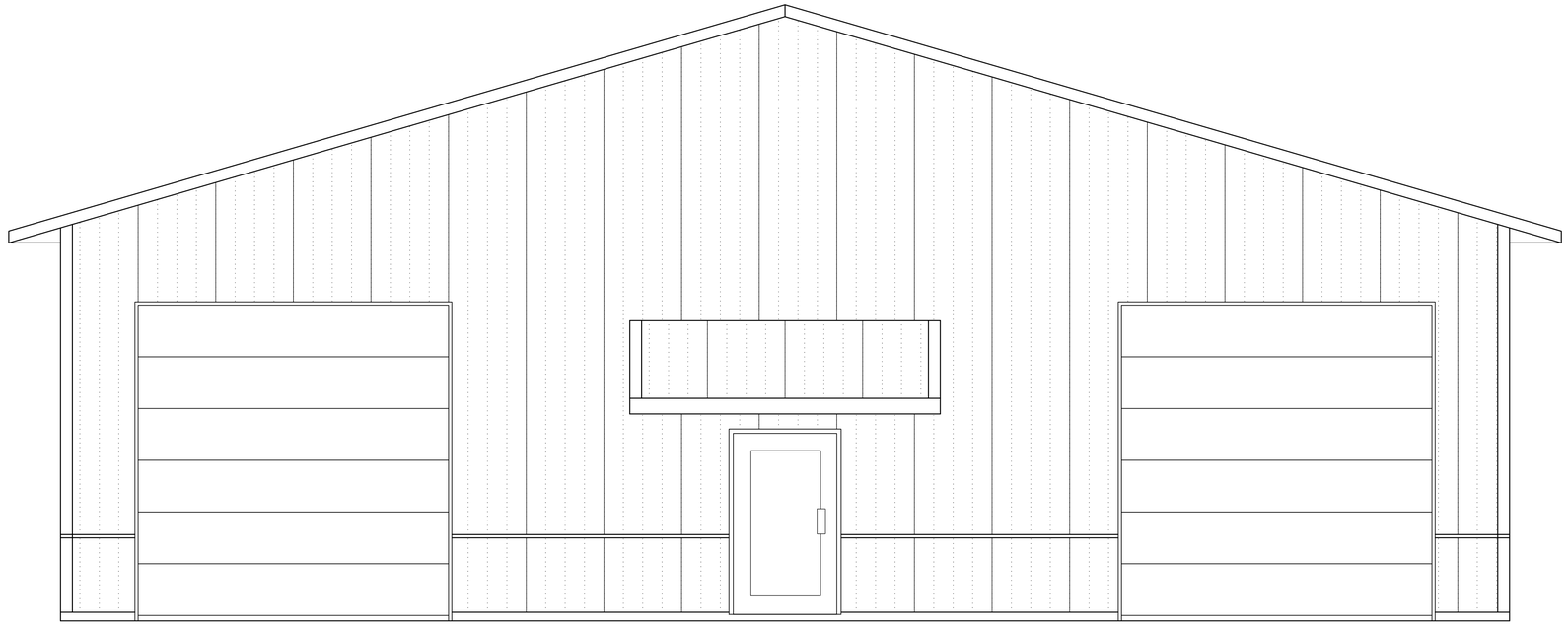

STATEMENT OF COMPLIANCE

I have signed & sealed the drawings shown in the sheet index for structural items only. This project is designed using the ASCE 7-16 Standard.

LICENSED STRUCTURAL ENGINEER
Alan J. Schornbach
081-006212
STATE OF ILLINOIS
SEAL
EXPIRES 11-30-2026

Sig: Alan Schornbach

ILLINOIS REGISTRATION #: 081-006212

Date: 5/01/2026

ILLINOIS DESIGN FIRM REGISTRATION #: 184-001764

SHEET INDEX

001
100
200
300
400
600
650
.
.
.
.
.
.
.
.
.
.
.

DESIGN LOADS:

ASCE LOAD STANDARD:	7-16	
GROUND SNOW LOAD (P_g):	30	psf
ROOF SNOW LOAD (P_s):	22.2	psf
ROOF LIVE LOAD (reducible, L_r):	20	psf
TOP CHORD DEAD LOAD:	4	psf
BOTTOM CHORD DEAD LOAD:	6	psf
BALANCED SNOW:	22.2	psf
WINDWARD SIDE:	6.6	psf
LEEWARD SIDE:	22.2	psf
LEEWARD UNBALANCED:	17.2	psf
UNBALANCED DIST. FROM RIDGE:	8.8	lnft
ADDITIONAL DRIFT:		
magnitude at start:	N/A	psf
magnitude at end:	N/A	psf
distance:	N/A	lnft
ADDITIONAL SLIDING:		
magnitude:	N/A	psf
distance:	N/A	lnft
DESIGN WIND SPEED:	115	mph
RISK CATEGORY:	2	
EXPOSURE CATEGORY:	C	
INTERNAL PRESSURE COEFFICIENT:	+/-.18	
SEISMIC DESIGN CATEGORY:	B	
SITE CLASS:	D	
RESPONSE MODIFICATION FACTOR:	6 1/2	
ANALYSIS PROCEDURE:	SIMPLIFIED	
PRESUMED SOIL BEARING PRESSURE:	3,000	psf

THE ALLOWABLE FIRE AREA FOR THIS PROJECT IS GOVERNED BY SECTION 903.2.9 #1 FROM THE 2012 IBC. OTHER USES WITH MORE STRINGENT FIRE AREA RESTRICTIONS WITHIN THE S-1 OCCUPANCY USE GROUP ARE NOT PERMITTED WITH THIS DESIGN.

SHEET INDEX

001 TITLE SHEET
100 FOUNDATION PLAN
200 FLOOR PLAN
300 ROOF & ATTIC DETAILS
400 EXTERIOR ELEVATIONS
600 OVERHEAD DOOR & WALL FRAMING DETAILS
650 MISC STANDARD DETAILS

DRAWING SYMBOL INDEX

℄ = CENTERLINE OF DIMENSION

⊗ = 4"x3" DOWNSPOUT LOCATION

|||| = LAMINATED COLUMN ORIENTATION (NON-STANDARD)

NO.	DATE	BY	DESCRIPTION
.	2026-04-30	JAKE P.	REVIEW SET

SEAL

Rochelle Car Wash

450 Coronado Dr.
Rochelle, IL 61068

SHEET TITLE:
TITLE SHEET

FBi Buildings
fbibuildings.com • (800) 552-2981

DRAWN (reviewed) BY :	Jake P. (Bill B.)
MTO BY :	XX
ENG. BY :	Alan S.
PSC :	Seth S.
SHEET :	001
FBi PROJECT # :	20-3154-00

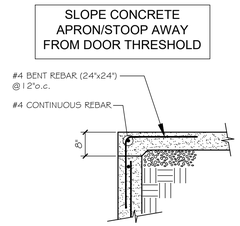

TYPICAL DOOR THRESHOLD
SCALE: 1/2" = 1'-0"

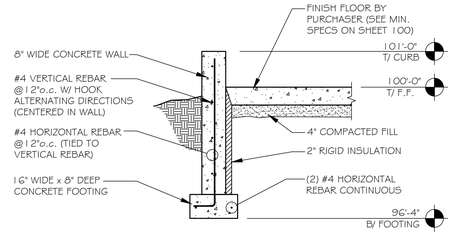

1 / 100 **FOUNDATION DETAIL**
SCALE: 1/2" = 1'-0"

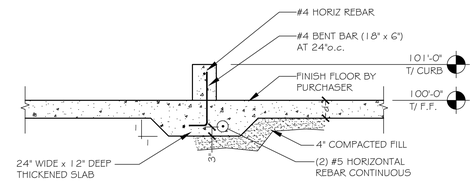

2 / 100 **FOUNDATION DETAIL**
SCALE: 1/2" = 1'-0"

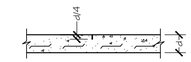

CONTROL JOINT DETAIL
SCALE: 1/2" = 1'-0"

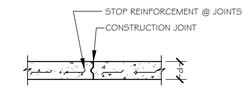

CONSTRUCTION JOINT DETAIL
SCALE: 1/2" = 1'-0"

Concrete Specs:
1. All concrete work shall conform to the current or referenced issues of "Building Code Requirements for reinforced Concrete", ACI 318, "Specification for Structural concrete for Buildings", ACI 301, "Manual of Standard Practice for Detailing Reinforced Concrete Structures" as adopted by the American Concrete Institute, and all other appropriate standards as dictated by weather conditions, site conditions, reinforcing steel requirements, etc.
2. All concrete exposed to weather shall be air entrained 5% +/- 1%.
3. All concrete shall have a 28 day strength of 4,000 psi.
4. All reinforcing bars shall conform to ASTM A615, grade 60.
5. Lap splices shall be class B according to the latest issue of the "Concrete Reinforcing Steel Institute Handbook:, unless noted otherwise.
6. Anchor bolts shall conform to ASTM A307 or better. Anchor bolts shall be carefully placed so that no modifications to post bracket plates are required.
7. Completed work shall not vary from the plumb, from the level, from the indicated grade or from the planned position more than 1/4" in ten feet.
8. All exposed edges of concrete shall have 3/4" chamfer.
9. Slab Finishing: Broom finish all areas near exit doors or as designated to be "slip-resistant" surfaces.
10. Under no conditions shall water be added to the concrete mix at the job site.
11. All walking surfaces, including floors of corridors, stairways and other components of the means of egress shall have a slip resistant surface.
12. Welded wire fabric shall conform to ASTM A185, unless otherwise noted.
13. Where hooks are indicated, provide standard hooks per ACI and CRSI for all bars unless other hook dimensions are shown on the plans.
14. Reinforcement in footings, walls, and beams shall be continuous. Lap bars a minimum of 36 diameters, unless noted otherwise.
15. Where walls sit on column footings, provide dowels for the wall. Dowels shall be the same size and spacing as the vertical wall reinforcement, unless noted otherwise, with lap splices as shown on the applicable sections. Install dowels in the footings forms before concrete is placed. Do NOT stick dowels into footings after concrete is placed.
16. Field bending of reinforcing steel is prohibited.
17. Minimum concrete cover over main reinforcing steel shall be as follows: 3" at foundations, 2" at all dirt faces of walls and beams exposed to the weather, 1" at all pier and column ties, and 3/4" at other faces and in structural slabs unless shown or noted otherwise.
18. Sawn or tooled control / contraction joints shall be provided in all slabs as per details or per ASTM D1751.
19. All drilled-in dowels & anchor bolts / rods shall be installed per manufacturer or engineer's instructions.
20. Minimum 6-mil vapor barrier required under slabs on grade conforming to ASTM E1745, Class C or ASTM D4397 mils.
21. Fiber-mesh reinforcement shall not be used in place of steel reinforcing. May be used to help resist shrinkage cracking.
22. Concrete slump shall be 4" +/- 1".
23. Isolation joints for slab-on-grade shall be used at all locations.
24. Floor treatment / cuning compounds shall be used.
25. Control joints shall be used on above grade walls at maximum spacing of 25' o.c.
26. Top horizontal rebar shall be kept 5" (min) from top of concrete.
27. Purchaser and their concrete designer/contractor are responsible for specifying the concrete floor slab. This includes slab thickness, slab reinforcement, and slab control joints. All must adhere to the concrete codes listed in spec item #1 above.

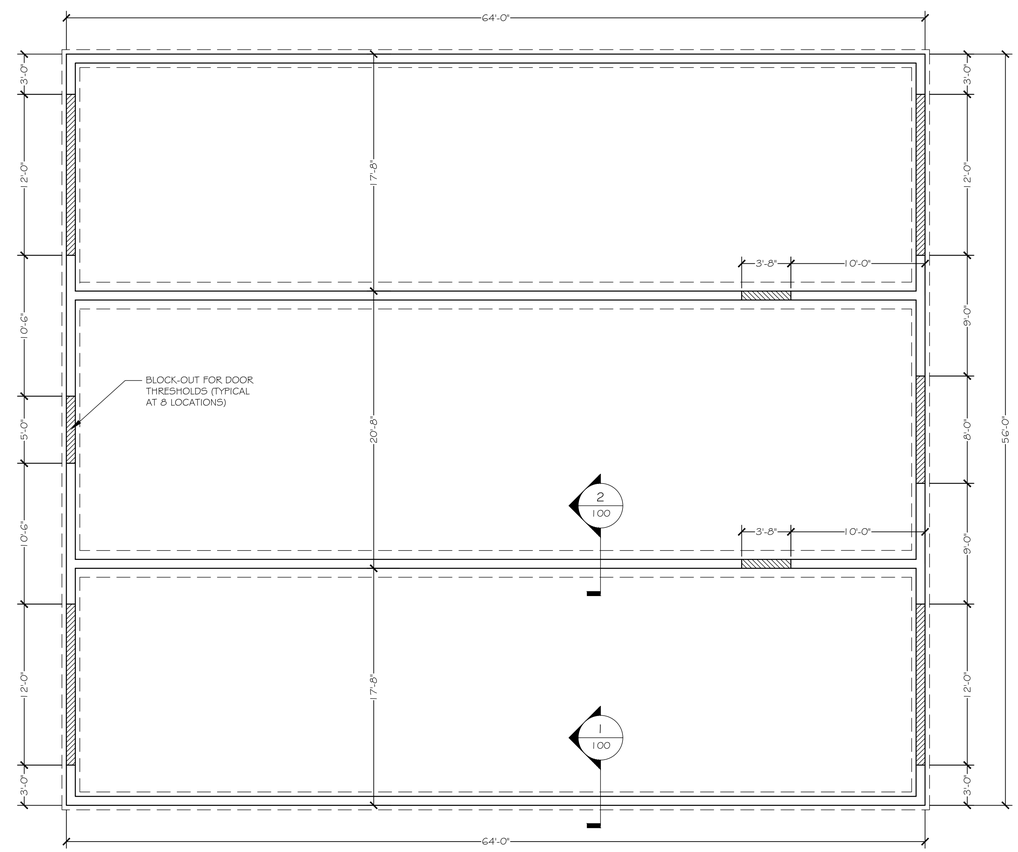

FOUNDATION PLAN
SCALE : 3/16" = 1'-0"

N

COPYRIGHT FBi Buildings, Inc.

NO.	DATE	BY	DESCRIPTION
1	2026-04-30	JAKE P.	REVIEW SET

SEAL

Rochelle Car Wash
450 Coronado Dr.
Rochelle, IL 61068

SHEET TITLE:
FOUNDATION PLAN

FBi Buildings
fbibuildings.com • (800) 552-2981

DRAWN (reviewed) BY :	Jake P. (Bill B.)
MTO BY :	XX
ENG. BY :	Alan S.
PSC :	Seth S.
SHEET :	100
FBi PROJECT # :	20-3154-00

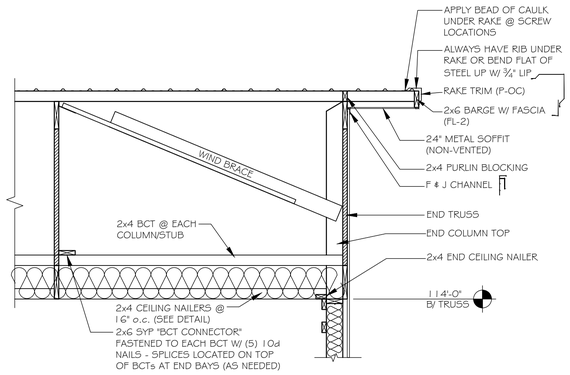

2 / 200 **GABLE END SECTION**
SCALE: ½" = 1'-0"

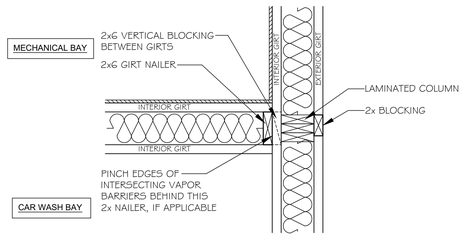

A / 200 **PARTITION FRAMING DETAIL (TYP.)**
SCALE: 1" = 1'-0"

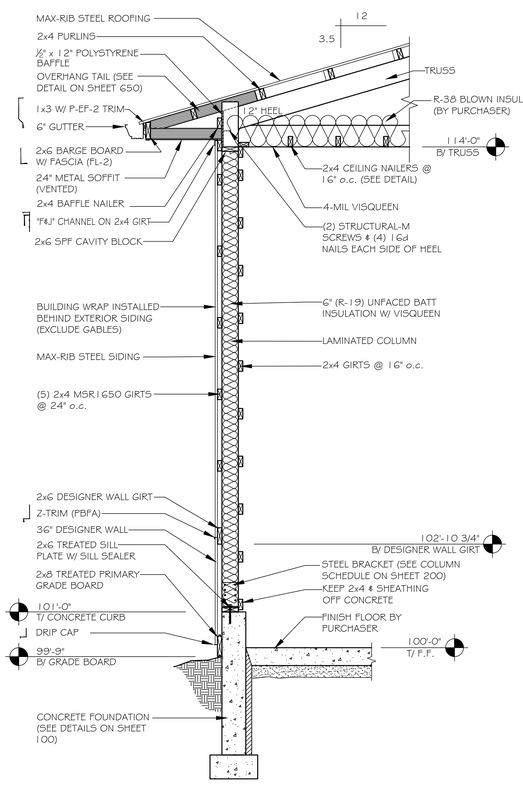

1 / 200 **WALL SECTION**
SCALE: ½" = 1'-0"

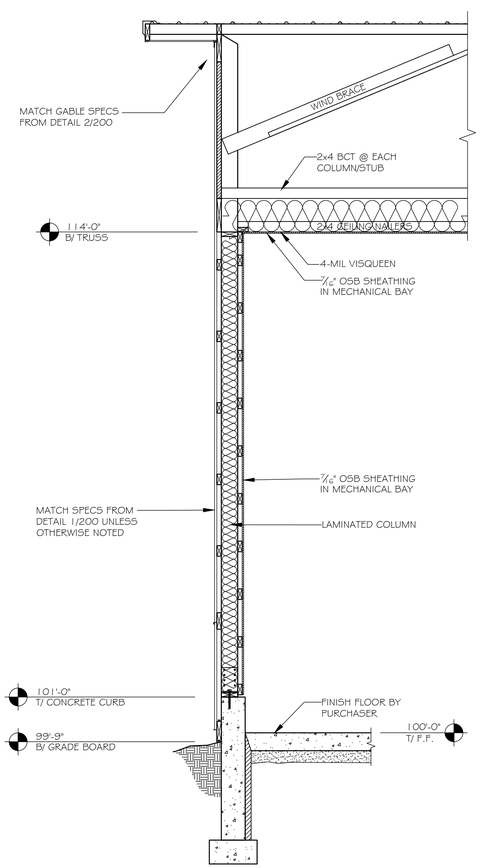

3 / 200 **WALL SECTION**
SCALE: ½" = 1'-0"

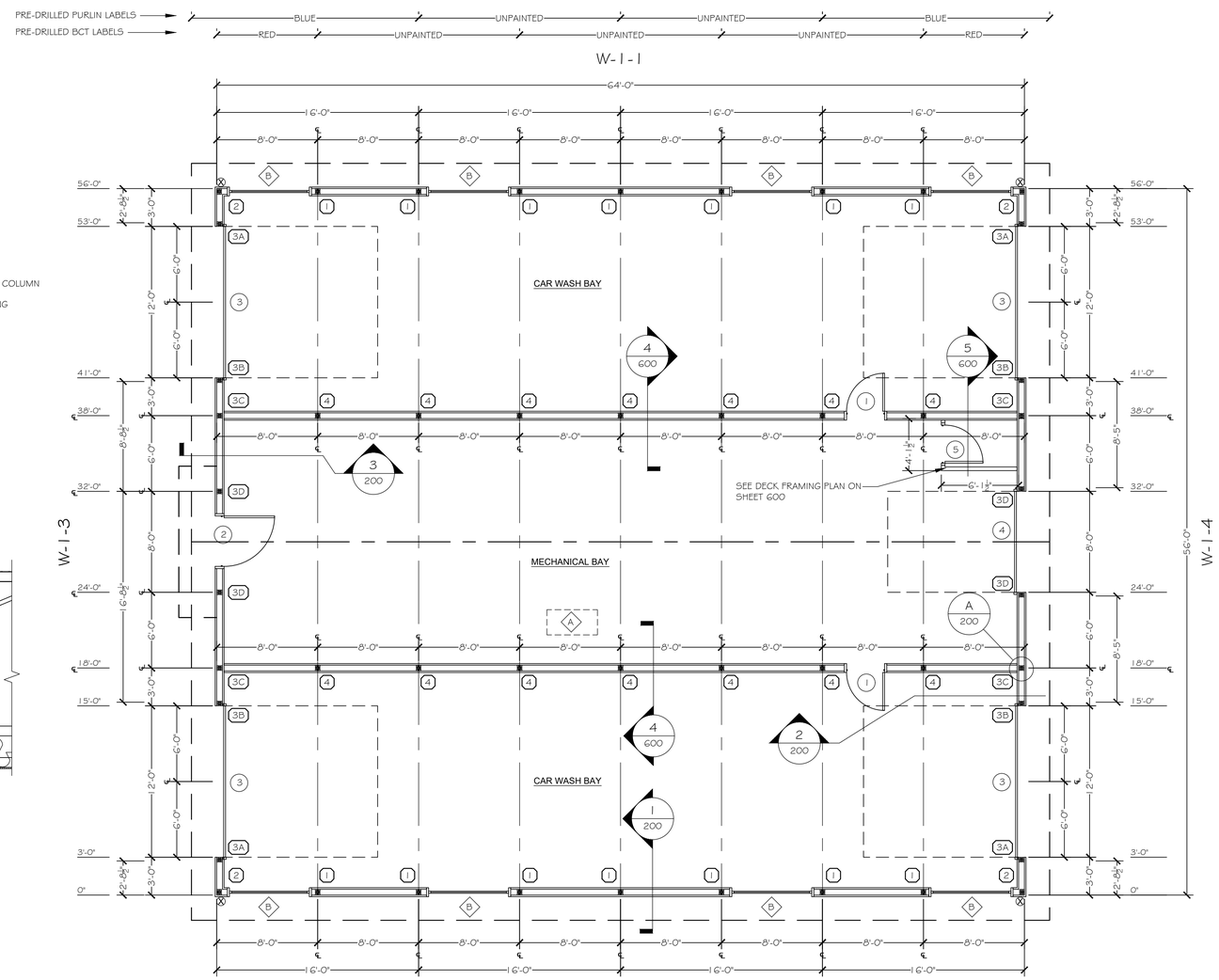

FLOOR PLAN
SCALE : 3/16" = 1'-0"

DIAGONAL: (56'-0" x 64'-0") = 85'-0½"

⊗ = 4" x 3" DOWNSPOUT LOCATION

COLUMN TAG KEY (CONV LIFT):
1 — COLUMN
1B — COLUMN ENDFILL

COLUMN STUB SCHEDULE

FULL COLUMNS OR STUBS							
LABEL	STUB / COL. SIZE	LENGTH	UPLIFT ANCHORS	UPLIFT ANCHOR FASTENERS	COMMENTS	BRACKET TYPE	STUB / COL. DEPTH
1	3-PLY 2x6	14'-0"	(2) 1/2" Ø x 6" TITEN	(8) STRUCTURAL-M SCREWS	FULL SIDE COLUMN	UNIV.	N/A
2	3-PLY 2x6	14'-0"	(2) 1/2" Ø x 6" TITEN	(8) STRUCTURAL-M SCREWS	FULL CORNER COLUMN	UNIV.	N/A
3	3-PLY 2x6	14'-0"	(2) 1/2" Ø x 6" TITEN	(8) STRUCTURAL-M SCREWS	FULL END COLUMN	UNIV.	N/A
4	3-PLY 2x6	14'-0"	(2) 1/2" Ø x 6" TITEN	(8) STRUCTURAL-M SCREWS	INTERIOR BEARING COLUMN	UNIV.	N/A

END FILL SCHEDULE

LABEL	COLOR / LENGTH
A	RED
B	GREEN
C	YELLOW
D	ORANGE

MISCELLANEOUS PRE-CUT SCHEDULE

LENGTH	COLOR	COMMENTS
+	RED	+
+	GREEN	+
+	YELLOW	+
+	ORANGE	+

OPENINGS SCHEDULE

LABEL	TYPE	MFTR/MODEL	SIZE	ROUGHOUT	ACCESSORIES	DETAIL LOCATION / COMMENTS
1	WALKDOOR	AJ #7100 SERIES	3068	40 5/16" x 81"	SOLID PANEL & LEVER LOCKSET	FBi TO FRAME OUT & INSTALL, SEE FRAME OUT DETAIL ON SHEET 650
2	ALUM WALKDOOR	BY PURCHASER	4070	53" x 86 1/2"	PURCHASER TO SUPPLY & INSTALL CODE COMPLIANT HARDWARE	FBi TO FRAME OUT & INSTALL, PURCHASER TO SUPPLY
3	OVERHEAD	BY PURCHASER	12' x 12'	12'-0" x 12'-0"		FBi TO FRAME OUT, PURCHASER TO SUPPLY & INSTALL, SEE DOOR #3 DETAIL ON SHEET 600
4	OVERHEAD	BY PURCHASER	8' x 10'	8'-0" x 10'-0"		FBi TO FRAME OUT, PURCHASER TO SUPPLY & INSTALL, SEE DOOR #4 DETAIL ON SHEET 600
5	WALKDOOR	BY PURCHASER	3068	VERIFY ON SITE	PURCHASER TO SUPPLY & INSTALL CODE COMPLIANT HARDWARE	FBi TO FRAME OUT, PURCHASER TO SUPPLY & INSTALL
A	ATTIC ACCESS	FBi	24" x 48"	24 1/8" x 48 1/8"		VERIFY LOCATION W/ PURCHASER, SEE DETAIL ON SHEET 300
B	ALUM WINDOW	BY PURCHASER	6476	6'-4" x 7'-6"	BY PURCHASER	FBi TO FRAME OUT & INSTALL, PURCHASER TO SUPPLY

PRE-CUT GIRT SCHEDULE

LENGTH (-1/16")	COLOR
16'-8 1/2"	RED
16'-0"	GREEN
8'-8 1/2"	YELLOW
8'-5"	ORANGE
2'-8 1/2"	PURPLE

NO.	DATE	BY	DESCRIPTION
	2026-04-30	JAKE P.	REVIEW SET

SEAL

Rochelle Car Wash
450 Coronado Dr.
Rochelle, IL 61068

SHEET TITLE:
FLOOR PLAN

FBi Buildings
fbibuildings.com • (800) 552-2981

DRAWN (reviewed) BY : Jake P. (Bill B.)
MTO BY : XX
ENG. BY : Alan S.
PSC : Seth S.
SHEET : 200
FBi PROJECT # : 20-3154-00

COPYRIGHT FBi Buildings, Inc.

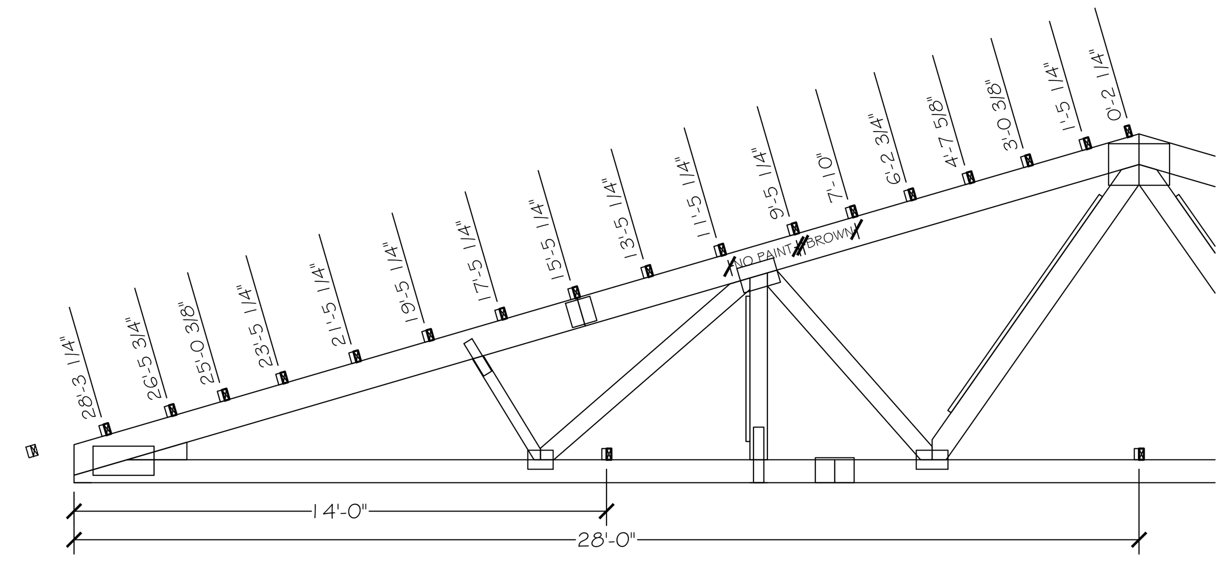

PURLIN & BCT PLACEMENT DRAWING

SCALE: 1/4" = 1'-0"

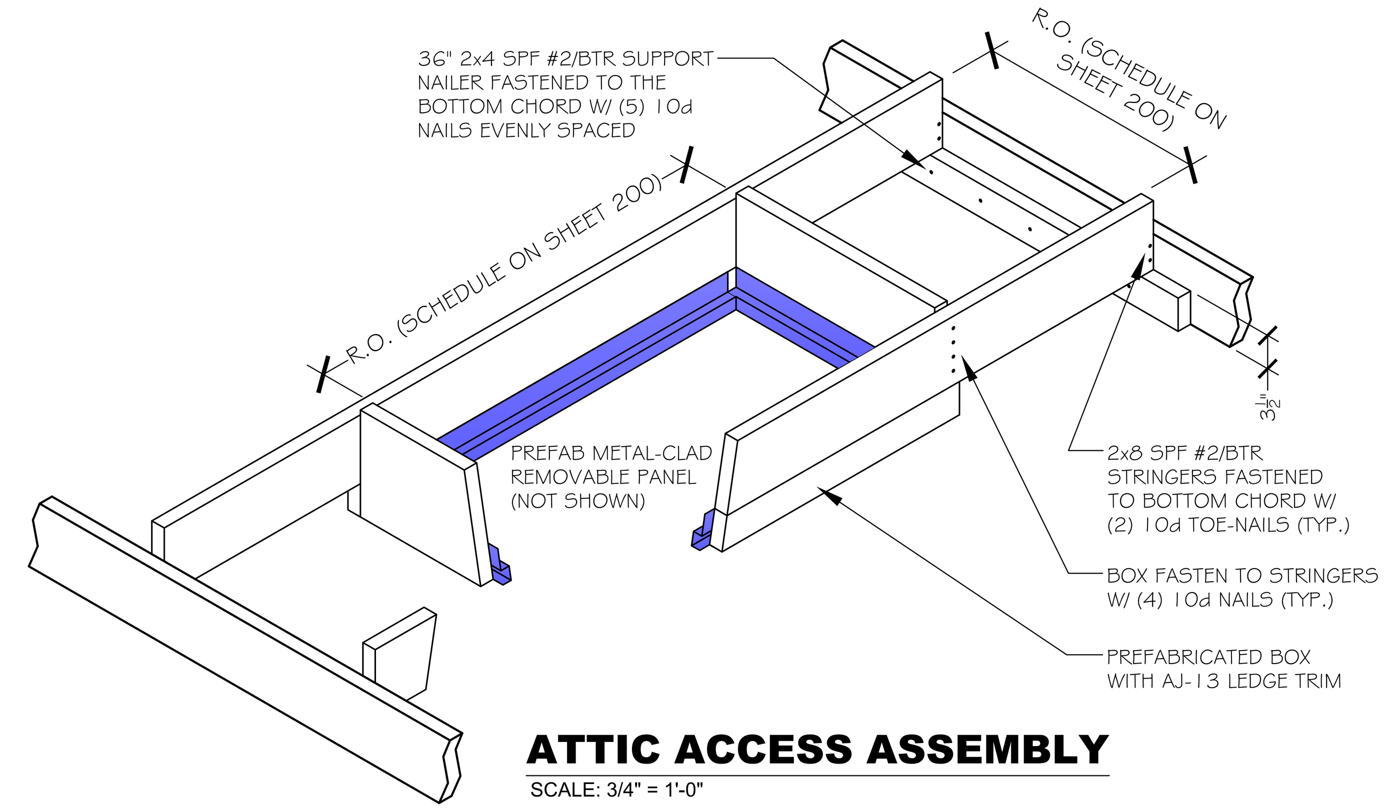

ATTIC ACCESS ASSEMBLY

SCALE: 3/4" = 1'-0"

20-3154-00 Rochelle Car Wash T1 - Combined bearing conditions	Ply: 1 Qty: 9 Wgt: 539.0 lbs	SEQN: 14184 / T4 / COMN FROM: JSS	DRW: ... / ... 04/24/2026

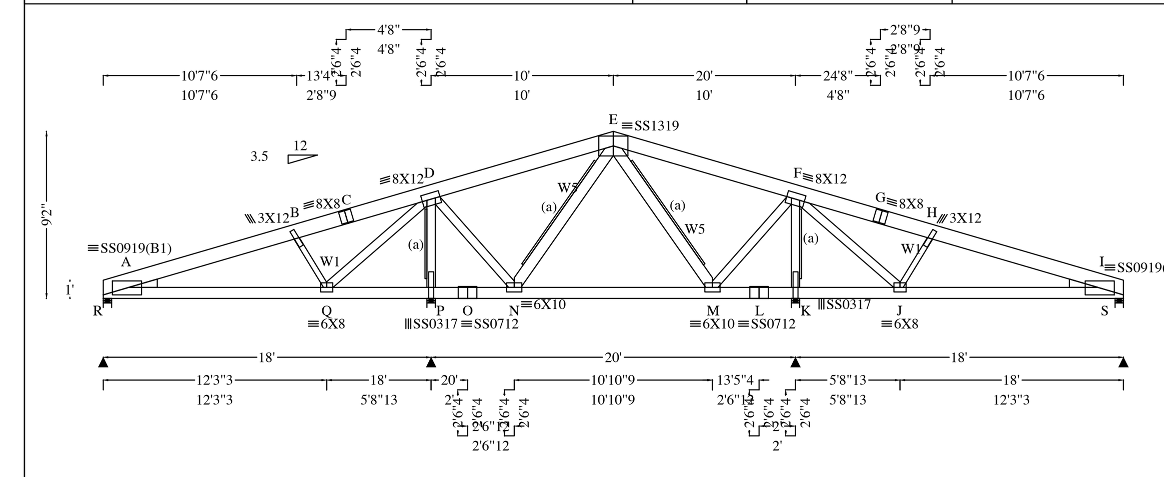

Loading Criteria (psf)	Wind Criteria	Snow Criteria (Pg,Pf in PSF)	Defl/CSI Criteria
TCLL: 23.00 TCDL: 4.00 BCLL: 0.00 BCDL: 6.00 Des Ld: 33.00 NCBCLL: 0.00 Soffit: 2.00 Load Duration: 1.15 Spacing: 96.0 "	Wind Std: ASCE 7-16 Speed: 115 mph Enclosure: Closed Risk Category: II EXP: C Mean Height: 15.00 ft TCDL: 2.0 psf BCDL: 0.6 psf MWFRS Parallel Dist: 0 to h/2 C&C Dist a: 5.60 ft GCpi: 0.18 Wind Duration: 1.60	Pg: 30.0 Ct: 1.2 CAT: III Pf: 24.9 Ce: 0.9 Lu: 31.0 Cs: 1.00 Snow Duration: 1.15 Code / Misc Criteria Bldg Code: IBC 2018 TPI Std: 2014 Rep Factors Used: No FT/RT: 10(0)/5(0)/4(0) Plate Type(s): 18SS, WAVE	PP Deflection in loc L/defl L/# VERT(LL): 0.116 A 999 240 VERT(TL): 0.168 A 999 240 HORZ(LL): 0.038 A - - HORZ(TL): 0.055 A - - Creep Factor: 2.0 Max TC CSI: 0.492 Max BC CSI: 0.366 Max Web CSI: 0.895 Mfg Specified Camber: VIEW Ver: 23.01.02.0731.18

▲ Maximum Reactions (lbs)

Loc	Gravity R+	/ R-	/ Rh	Non-Gravity / Rw	/ U	/ RL
R	2207	/-	/-	/766	/677	/456
P	6387	/-	/-	/2075	/1813	/-
K	6387	/-	/-	/2004	/1813	/-
S	2207	/-	/-	/837	/677	/-

Wind reactions based on MWFRS
R Brg Wid = 5.5 Min Req = 1.8 (Truss)
P Brg Wid = 5.5 Min Req = 4.9 (Truss)
K Brg Wid = 5.5 Min Req = 4.9 (Truss)
S Brg Wid = 5.5 Min Req = 1.8 (Truss)
Bearings R, P, K, & S are a rigid surface.

Maximum Top Chord Forces Per Ply (lbs)

Chords	Tens.	Comp.	Chords	Tens.	Comp.
A - B	1318	- 2853	E - F	782	- 1112
B - C	1089	- 1983	F - G	1110	- 1799
C - D	1110	- 1799	G - H	1089	- 1983
D - E	836	- 1112	H - I	1318	- 2853

Maximum Bot Chord Forces Per Ply (lbs)

Chords	Tens.	Comp.	Chords	Tens.	Comp.
A - Q	2588	- 1009	M - L	748	- 954
Q - P	709	- 846	L - K	748	- 954
P - O	758	- 954	K - J	698	- 846
O - N	758	- 954	J - I	2588	- 1009
N - M	1249	- 239			

Maximum Web Forces Per Ply (lbs)

Webs	Tens.	Comp.	Webs	Tens.	Comp.
B - Q	1238	- 2058	E - M	796	- 1317
Q - D	3349	- 1588	M - F	1932	- 767
D - P	2668	- 6164	K - F	2644	- 6164
D - N	1932	- 743	F - J	3349	- 1588
N - E	774	- 1317	J - H	1238	- 2058

Lumber

<gap/>Top chord: 2x10 SP 2400f-2.0E;
Bot chord: 2x8 SP 2400f-2.0E;
Webs: 2x6 SP #1; W1 2x4 SP #1;
W5 2x8 SP 2400f-2.0E;
Lt Wedge: 2x6 SP #1;Rt Wedge: 2x6 SP #1;

Bracing

<gap/>(a) 1x4 #3SRB SPF-S or better "L" reinforcement. 80% length of web member. Attach with 8d Box or Gun (0.113"x2.5",min.)nails @ 6" oc.

Purlins

<gap/>In lieu of structural panels or rigid ceiling use purlins to laterally brace chords as follows:

Chord	Spacing(in oc)	Start(ft)	End(ft)
TC	24	0.00	28.00
TC	24	28.00	56.00
BC	192	0.15	55.85

Apply purlins to any chords above or below fillers at 24" OC unless shown otherwise above.

Loading

<gap/>Truss designed for unbalanced snow loads.

Wind

<gap/>Wind loads based on MWFRS with additional C&C member design.

<gap/>Wind loading based on both gable and hip roof types.

Additional Notes

<gap/>WARNING: Furnish a copy of this DWG to the installation contractor. Special care must be taken during handling, shipping and installation of trusses. See "WARNING" note below.

TRUSSES MAY BE SET BEFORE OR AFTER INSTALLATION OF INTERIOR BEARING PARTITION COLUMNS

WARNING READ AND FOLLOW ALL NOTES ON THIS DRAWING!
IMPORTANTFURNISH THIS DRAWING TO ALL CONTRACTORS INCLUDING THE INSTALLERS

Trusses require extreme care in fabricating, handling, shipping, installing and bracing. Refer to and follow the latest edition of BCSI (Building Component Safety Information, by TPI and SBCA) for safety practices prior to performing these functions. Installers shall provide temporary bracing per BCSI. Unless noted otherwise,top chord shall have properly attached structural sheathing and bottom chord shall have a properly attached rigid ceiling. Locations shown for permanent lateral restraint of webs shall have bracing installed per BCSI sections B3, B7, or B10, as applicable. Apply plates to each face of truss and position as shown above and on the Joint Details, unless noted otherwise. Refer to drawings 160A-Z for standard plate positions.

ITW Building Components Group Inc. shall not be responsible for any deviation from this drawing,any failure to build the truss in conformance with ANSI/TPI 1, or for handling, shipping, installation and bracing of trusses. A seal on this drawing or cover page listing this drawing, indicates acceptance of professional engineering responsibility solely for the design shown. The suitability and use of this drawing for any structure is the responsibility of the Building Designer per ANSI/TPI 1 Sec.2.

For more information see this job's general notes page and these web sites: ITWBCG: www.itwbcg.com; TPI: www.tpinst.org; SBCA: www.sbcindustry.com; ICC: www.iccsafe.org

TRUSS DRAWING

SCALE : N.T.S.

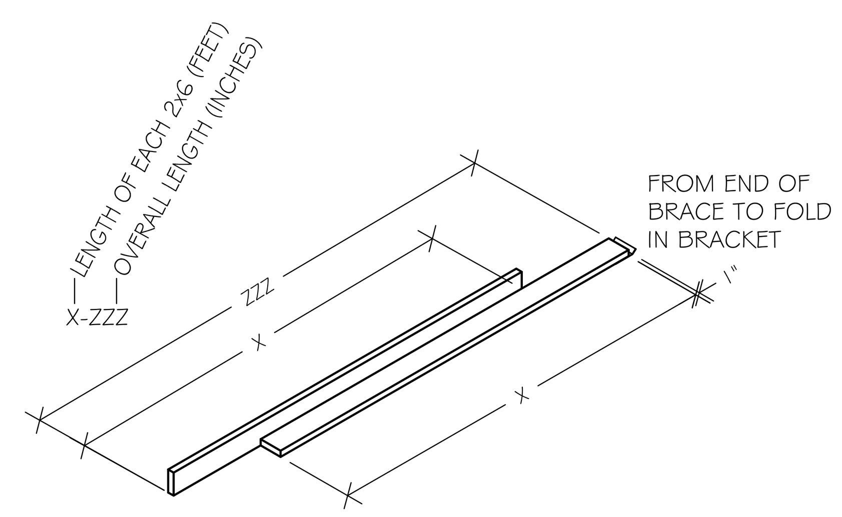

WIND BRACE ASSEMBLY

SEE ALSO DETAIL ON SHEET 651

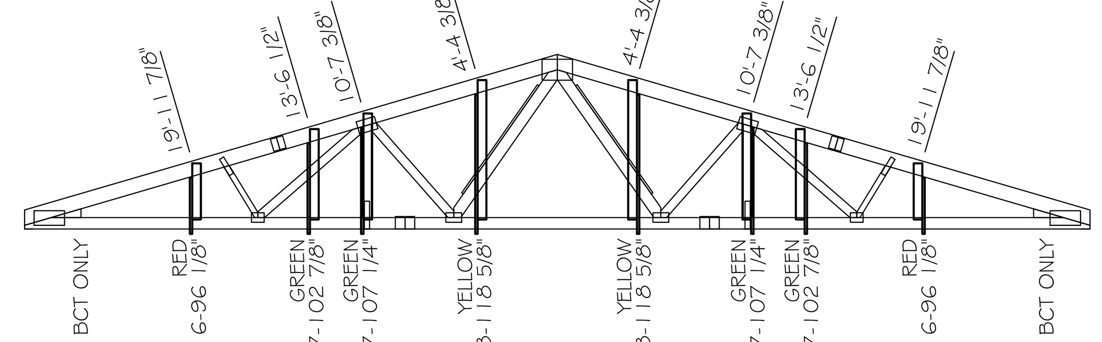

NORTH END WIND BRACE LOCATION

SCALE: 1/8" = 1'-0"

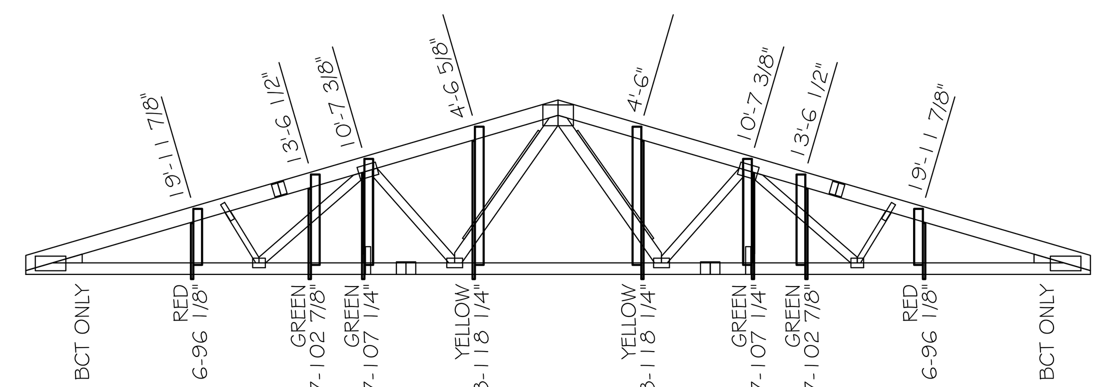

SOUTH END WIND BRACE LOCATION

SCALE: 1/8" = 1'-0"

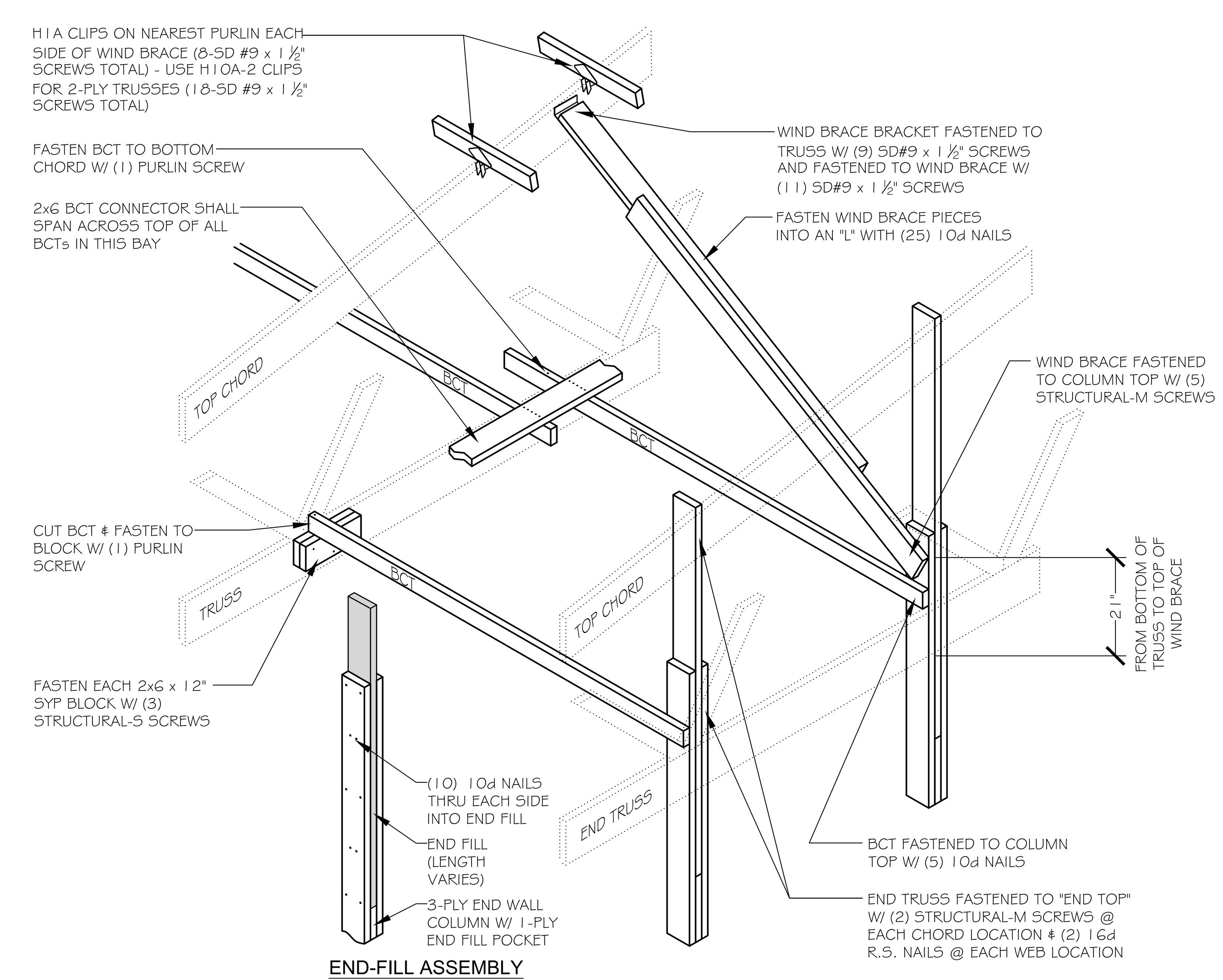

END TOP/WIND BRACE CONNECTION

SCALE: 1/2" = 1'-0"

NO.	DATE	BY	DESCRIPTION
.	2026-04-30	JAKE P.	REVIEW SET

SEAL

Rochelle Car Wash

450 Coronado Dr.
Rochelle, IL 61068

SHEET TITLE:
ROOF & ATTIC DETAILS

FBi Buildings
fbibuildings.com • (800) 552-2981

DRAWN (reviewed) BY :	Jake P. (Bill B.)
MTO BY :	XX
ENG. BY :	Alan S.
PSC :	Seth S.
SHEET :	300
FBi PROJECT # :	20-3154-00

COPYRIGHT FBi Buildings, Inc.

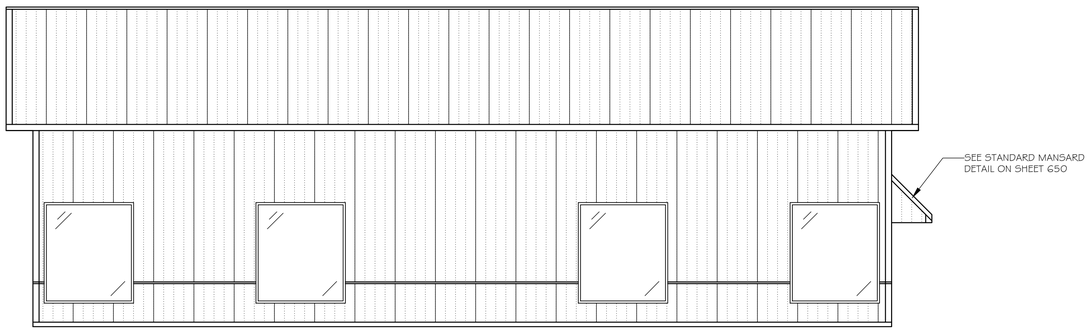

EAST ELEVATION
SCALE: 3/16" = 1'-0"

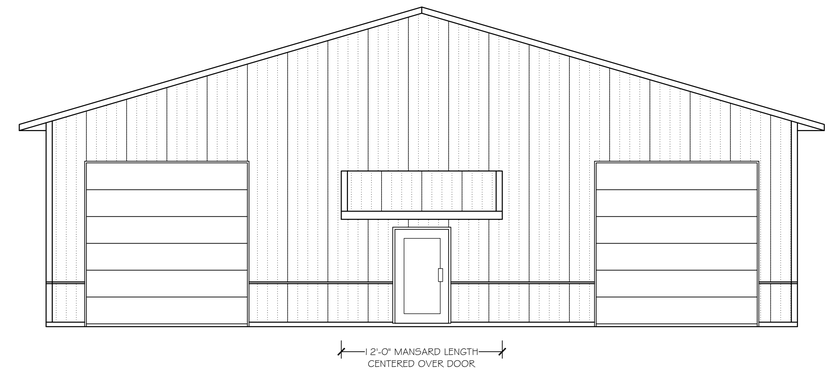

NORTH ELEVATION
SCALE: 3/16" = 1'-0"

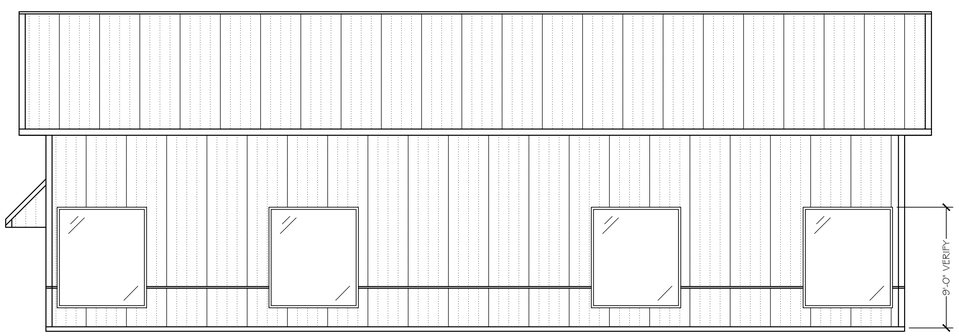

WEST ELEVATION
SCALE: 3/16" = 1'-0"

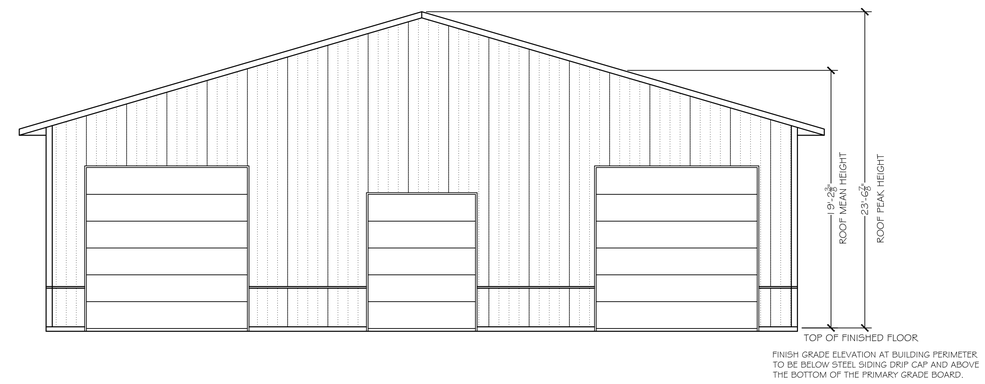

SOUTH ELEVATION
SCALE: 3/16" = 1'-0"

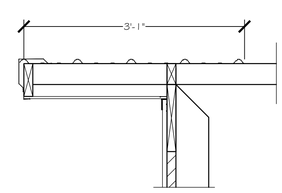

ROOF STARTER PANEL
SCALE: 1" = 1'-0"

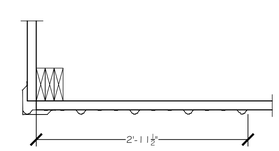

SIDEWALL STARTER PANEL
SCALE: 1" = 1'-0"

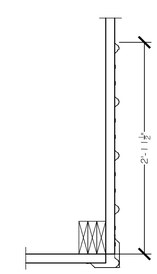

ENDWALL STARTER PANEL
SCALE: 1" = 1'-0"

COPYRIGHT FBi Buildings, Inc.

NO.	DATE	BY	DESCRIPTION
1	2026-04-30	JAKE P.	REVIEW SET

SEAL

Rochelle Car Wash
450 Coronado Dr.
Rochelle, IL 61068

SHEET TITLE:
BUILDING ELEVATIONS

FBi Buildings
fbibuildings.com • (800) 552-2981

DRAWN (reviewed) BY :	Jake P. (Bill B.)
MTO BY :	XX
ENG. BY :	Alan S.
PSC :	Seth S.
SHEET :	400
FBi PROJECT # :	20-3154-00

OVERHEAD DOOR DETAILS

WALL FRAMING DETAILS

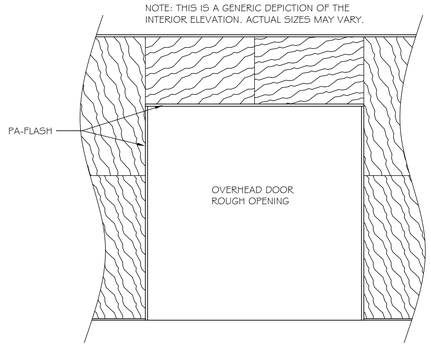

OHD #4 INTERIOR FINISH ELEVATION

SCALE: 1/4" = 1'-0"

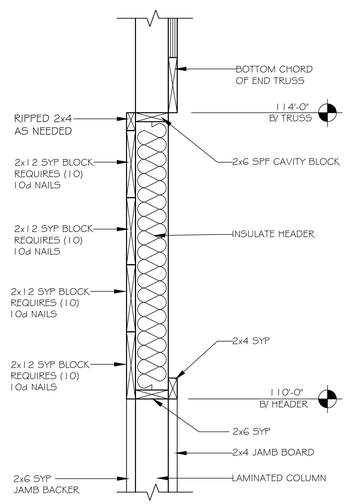

DOOR #4 HEADER DETAIL

SCALE: 1" = 1'-0"

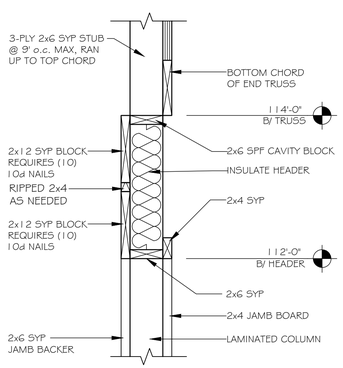

DOOR #3 HEADER DETAIL

SCALE: 1" = 1'-0"

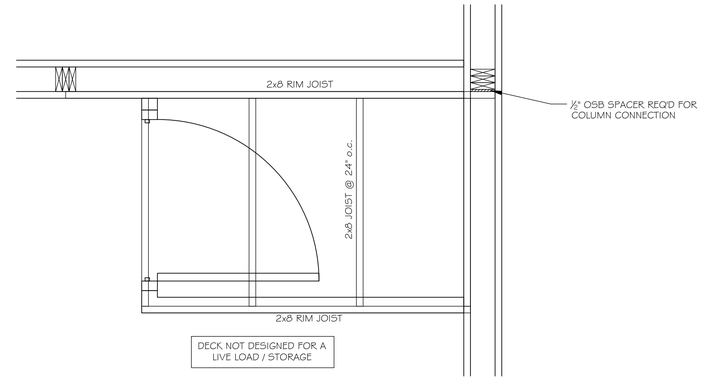

DECK FRAMING PLAN

SCALE : 3/4" = 1'-0"

22

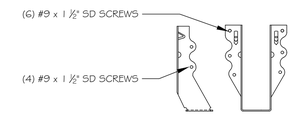

SIMPSON LU26 BRACKET

SCALE : N.T.S.

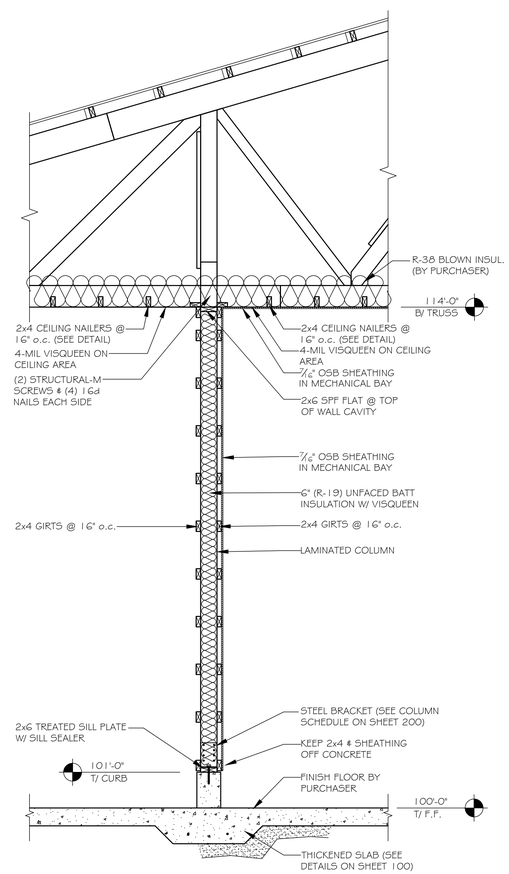

4/600 WALL SECTION

SCALE: 1/2" = 1'-0"

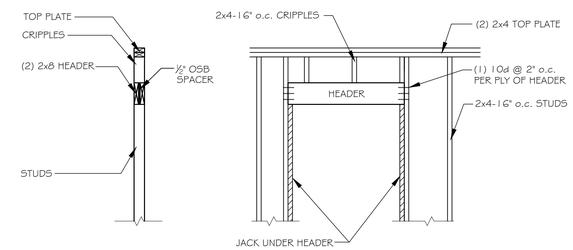

STUD WALL HEADER DETAIL (TYP.)

SCALE: 1/2" = 1'-0"

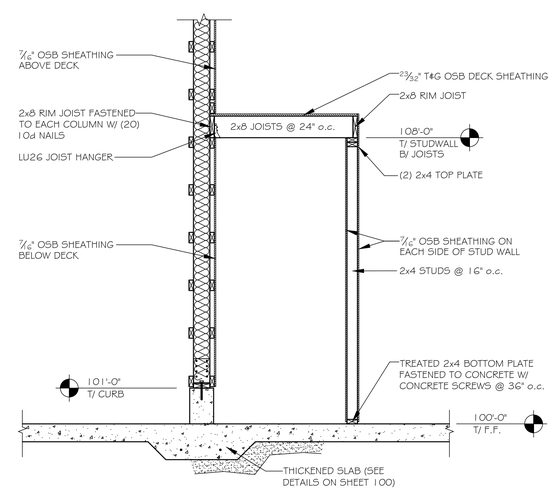

5/600 WALL SECTION

SCALE: 1/2" = 1'-0"

NO.	DATE	BY	DESCRIPTION
1	2026-04-30	JAKE P.	REVIEW SET

SEAL

Rochelle Car Wash
450 Coronado Dr.
Rochelle, IL 61068

SHEET TITLE:
OVERHEAD DOOR & WALL FRAMING DETAILS

FBi Buildings
fbibuildings.com • (800) 552-2981

DRAWN (reviewed) BY :	Jake P. (Bill B.)
MTO BY :	XX
ENG. BY :	Alan S.
PSC :	Seth S.
SHEET :	600
FBi PROJECT # :	20-3154-00

COPYRIGHT FBi Buildings, Inc.

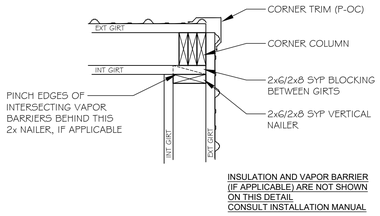

TYPICAL CORNER DETAIL

SCALE: 1" = 1'-0"

THIS IS A GENERIC DETAIL TO SHOW OVERHANG FASTENERS. ACTUAL OVERHANG CONSTRUCTION MAY VARY FROM THIS DETAIL.

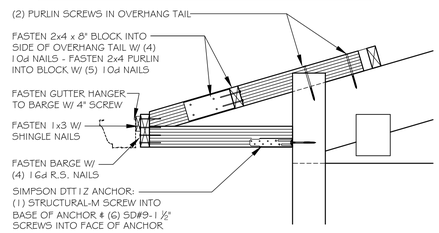

24" OVERHANG CONNECTION

SCALE: 1" = 1'-0"

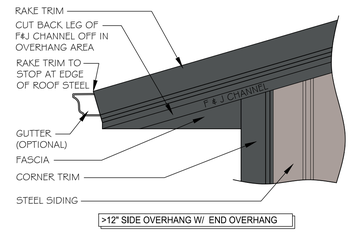

RAKE FINISH DETAIL

SCALE: 1" = 1'-0"

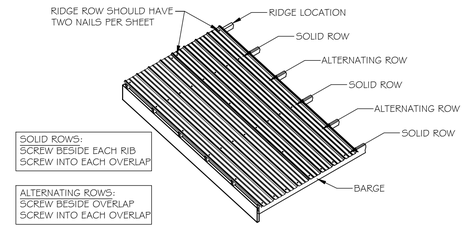

ALTERNATING SCREW PATTERN (ROOF)

SCALE: 1/4" = 1'-0"

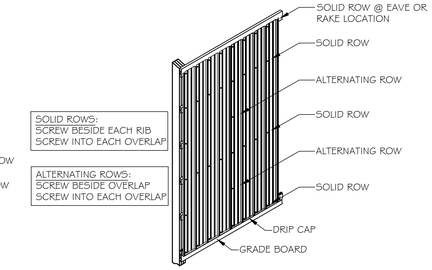

ALTERNATING SCREW PATTERN (WALL)

SCALE: 1/4" = 1'-0"

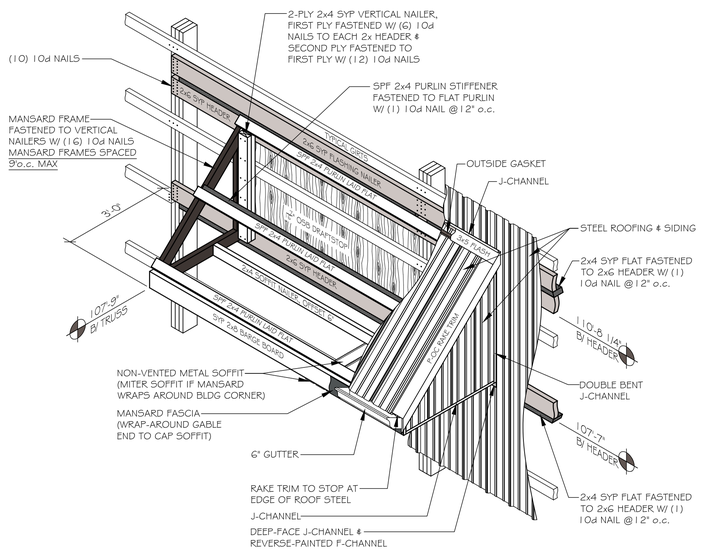

STANDARD MANSARD DETAIL

SCALE: 1/2" = 1'-0"

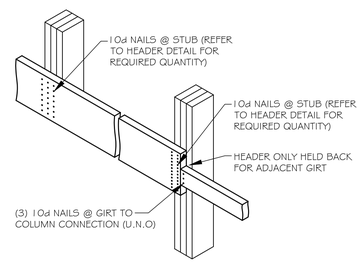

WOOD HEADER FASTENER PATTERN

SCALE: 3/4" = 1'-0"

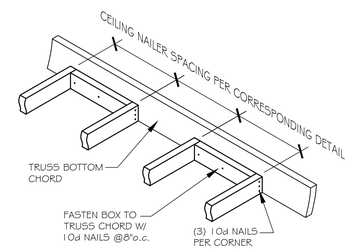

CEILING NAILER CONSTRUCTION

SCALE: 3/4" = 1'-0"

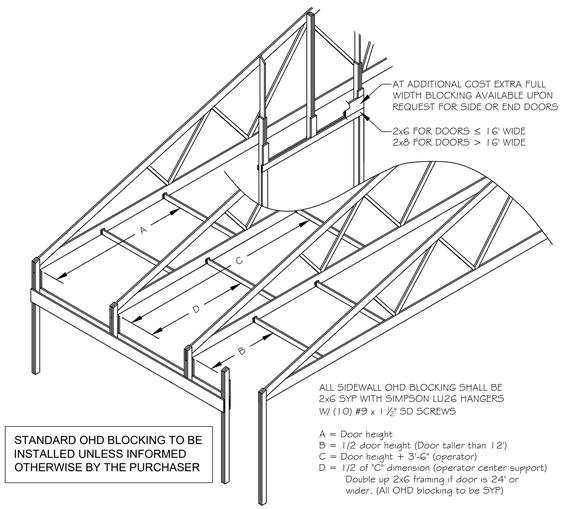

STANDARD OHD BLOCKING TO BE INSTALLED UNLESS INFORMED OTHERWISE BY THE PURCHASER

TYPICAL OHD BLOCKING DETAIL (TYPICAL 24" HEADROOM TRACK ONLY)

SCALE: NTS

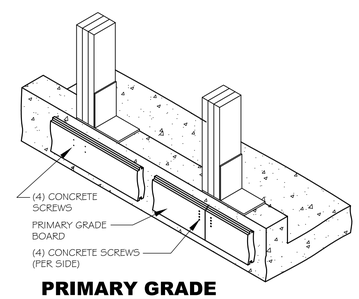

PRIMARY GRADE BOARD CONNECTION

SCALE: 3/4" = 1'-0"

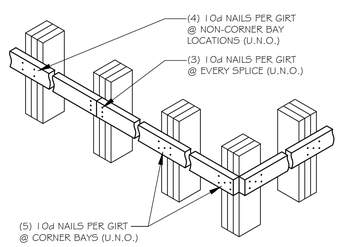

GIRT CONNECTIONS

SCALE: 3/4" = 1'-0"

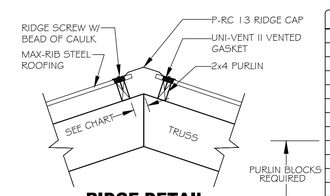

REFERENCE CHART

ROOF PITCH	DISTANCE TO FIRST PURLIN
2/12	3"
2.5/12	2 3/4"
3/12	2 1/2"
3.25/12	2 1/2"
3.5/12	2 1/4"
4/12	2 1/4"
4.5/12	2"
5/12	1 3/4"
5.5/12	1 3/4"
6/12	1 1/2"
6.5/12	1 1/2"
7/12	1 1/4"
7.5/12	1"

RIDGE DETAIL

SCALE: 1" = 1'-0"

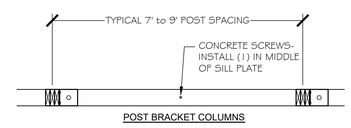

SILL PLATE INSTALLATION

SCALE: 1/2" = 1'-0"

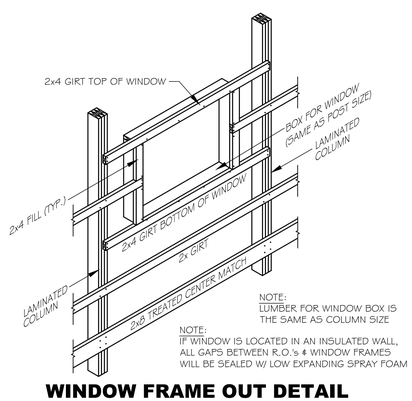

WINDOW FRAME OUT DETAIL

SCALE: 3/8" = 1'-0"

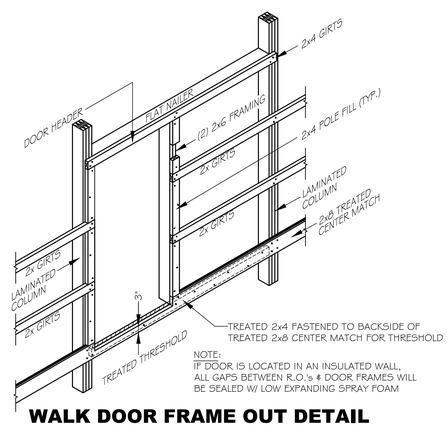

WALK DOOR FRAME OUT DETAIL

SCALE: 3/8" = 1'-0"

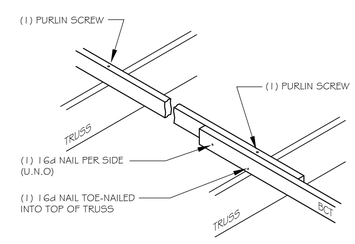

BCT CONNECTION

SCALE: 3/4" = 1'-0"

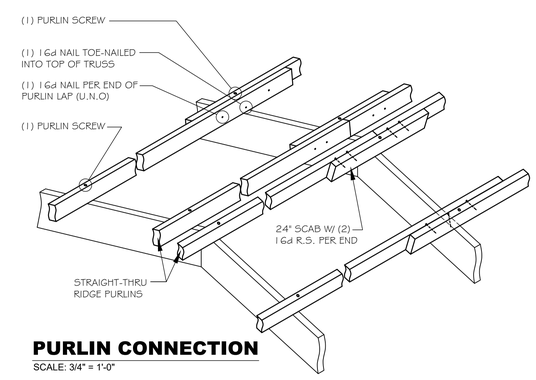

PURLIN CONNECTION

SCALE: 3/4" = 1'-0"

COPYRIGHT FBi Buildings, Inc.

NO.	DATE	BY	REVISION SET DESCRIPTION
1	2026-04-30	JAKE P.	

SEAL

Rochelle Car Wash
450 Coronado Dr.
Rochelle, IL 61068

SHEET TITLE:
MISC DETAIL

FBi Buildings
fbibuildings.com • (800) 552-2981

DRAWN (reviewed) BY :	Jake P. (Bill B.)
MTO BY :	XX
ENG. BY :	Alan S.
PSC :	Seth S.
SHEET :	650
FBi PROJECT # :	20-3154-00