AUTOMATIC SYSTEMS CO.

Mr. Victor Kane
City of Oelwein, IA
20 Second Avenue SW
Oelwein, IA 50662

April 28, 2020

SUBJECT: Oelwein, IA Main Lift Station Flow Meter Replacement – Revision No. 1

Mr. Kane,
The following proposal is for the replacement or your existing Main Lift Station Flow Meter which is obsolete. Our proposal includes equipment and services as detailed below.

Revision No. 1 changed the flow meter from a 4" to 6" meter. The original serial number in ABB's database indicated a 4" meter but based on your field verification it is a 6" meter. I have attached the dimensions of the proposed meter.

A One (1) **Main Lift Flow Meter,** 6" inline, hard-rubber lined, integrally mounted 120 Vac NEMA 4X transmitter with 4-20 mA output, and stainless steel grounding rings.

B One (1) **Onsite Field Services** to include start-up and testing.

Your net price for Item A thru B, FOB factory with **freight allowed** to jobsite including **one (1) year warranty** from date of startup (not to exceed 18 months from date of shipment)…….**$ 5,610.00 PLUS TAX .**

The above price for Item A thru B **does not** include any:

1. Sales or use taxes.
2. Bond costs.
3. License fees or permits of any kind.
4. Installation of the flow meter.

Thank you very much for the opportunity of providing you with the above proposal, should you wish to proceed with an order please sign on the space provided below and return a copy to this office.

We look forward to hearing from you, should you have any questions please don't hesitate to give me a call.

Sincerely,

Travis Moran

Automatic Systems Company

Accepted by:_____Date:_____

...Sensor dimensions

FEW – DN150 to 400 (6 to 16 in. NB)

Dimensions in mm (in.)

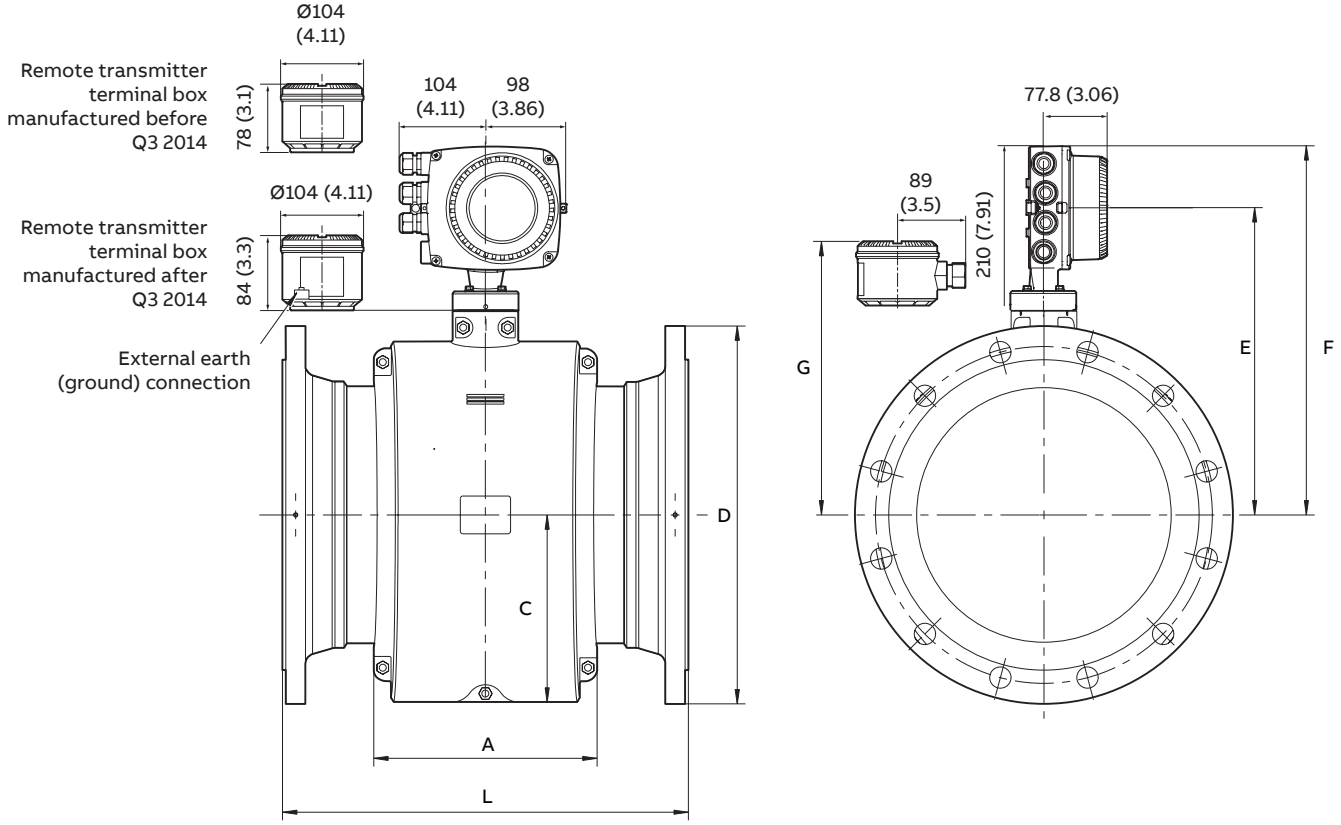

DN150 to 400 (6 to 16 in. NB) (FEW)

DN	Process connection type	Dimensions in mm (in.)							Approx. weight in kg (lb)	
		D	L	F	C	E	G	A	Integral	Remote
DN150 (6 in.)	PN10 to 16	285 (11.22)	300 (11.81)	371 (14.61)	146 (9.88)	296 (11.65)	251 (9.88)	166 (6.54)	33 (73)	31 (68)
	PN25 to 40	300 (11.81)							39 (86)	37 (81)
	JIS5K	265 (10.43)							33 (73)	31 (68)
	JIS10K	280 (11.02)							33 (73)	31 (68)
	AS4087 PN16	280 (11.02)							33 (73)	31 (68)
	AS4087 PN35	305 (11.81)							39 (86)	37 (81)
	ASME B16.5 CL300	320 (12.60)							47 (103)	45 (99)
	ASME B16.5 CL150	279 (10.98)							33 (73)	31 (68)
DN200 (8 in.)	PN10	340 (13.39)	350 (13.78)	411 (16.18)	170 (6.69)	336 (13.23)	291 (11.46)	200 (7.87)	41 (90)	39 (86)
	PN16	340 (13.39)							41 (90)	39 (86)
	PN25	360 (14.17)							55 (121)	53 (117)
	PN40	375 (14.76)							65 (143)	63 (139)
	AS4087 PN16	335 (13.19)							41 (90)	39 (86)
	AS4087 PN35	370 (14.57)							65 (143)	63 (139)
	JIS5K	320 (12.60)							41 (90)	39 (86)
	JIS10K	330 (12.99)							41 (90)	39 (86)
	ASME B16.5 CL300	380 (14.96)							72 (158)	70 (154)
	ASME B16.5 CL150	345 (13.58)							50 (110)	48 (106)
DN250 (10 in.)	PN10	395 (15.55)	450 (17.72)	426 (16.77)	198 (7.80)	351 (13.82)	306 (12.05)	235 (9.62)	61 (134)	59 (130)
	PN16	405 (15.94)							65 (143)	63 (139)
	PN25	425 (16.73)							84 (185)	82 (180)
	PN40	450 (17.72)							95 (209)	93 (205)
	AS4087 PN16	405 (15.94)							65 (143)	63 (139)
	AS4087 PN35	430 (16.93)							95 (209)	93 (205)
	JIS5K	385 (15.16)							65 (143)	63 (139)
	JIS10K	400 (15.75)							65 (143)	63 (139)
	ASME B16.5 CL300	445 (17.52)							105 (231)	103 (227)
	ASME B16.5 CL150	405 (15.94)							70 (154)	68 (150)
DN300 (12 in.)	PN10	445 (17.52)	500 (19.69)	449 (17.68)	228 (8.98)	374 (14.72)	329 (12.95)	272 (10.71)	74 (163)	72 (158)
	PN16	460 (18.11)							80 (176)	78 (172)
	PN25	485 (19.09)							100 (220)	98 (216)
	JIS5K	430 (16.93)							80 (176)	78 (172)
	JIS10K	445 (17.52)							80 (176)	78 (172)
	AS4087 PN16	455 (17.91)							80 (176)	78 (172)
	AS4087 PN35	490 (19.29)							130 (286)	128 (282)
	ASME B16.5 CL300	520 (20.47)							150 (330)	148 (326)
	ASME B16.5 CL150	485 (19.09)							105 (231)	103 (227)
	PN40	515 (20.28)	600 (23.62)						130 (286)	128 (282)
DN350 (14 in.)	PN10	505 (19.88)	550 (21.65)	464 (18.27)	265 (10.43)	389 (15.31)	344 (13.54)	322 (12.68)	95 (209)	93 (205)
	PN16	520 (20.47)							110 (242)	108 (238)
	PN25	555 (21.85)							145 (319)	143 (315)
	JIS5K	480 (18.90)							95 (209)	93 (205)
	JIS10K	490 (19.29)							95 (209)	93 (205)
	AS4087 PN16	525 (20.67)							130 (286)	128 (282)
	AS4087 PN35	550 (21.65)							185 (407)	183 (403)
	ASME B16.5 CL300	585 (23.03)							140 (308)	138 (304)
	ASME B16.5 CL150	535 (21.06)							105 (231)	103 (227)
	PN40	580 (22.83)	650 (25.59)						195 (429)	193 (425)
DN400 (16 in.)	PN10	565 (22.24)	600 (23.62)	506 (19.92)	265 (10.43)	431 (16.97)	386 (15.20)	322 (12.68)	103 (227)	101 (222)
	PN16	580 (22.83)							126 (277)	124 (273)
	PN25	620 (24.41)							170 (374)	168 (370)
	JIS5K	540 (21.26)							103 (227)	101 (223)
	JIS10K	560 (22.05)							116 (255)	114 (251)
	AS4087 PN16	580 (22.83)							154 (339)	152 (335)
	AS4087 PN35	610 (24.02)							302 (664)	300 (660)
	ASME B16.5 CL300	650 (25.59)							265 (583)	263 (578)
	ASME B16.5 CL150	600 (23.62)							175 (385)	173 (381)
	PN40	660 (25.98)	650 (25.59)						258 (568)	256 (564)

DN150 to 400 (6 to 16 in. NB) (FEW) dimensions / weights