AT&T MOBILITY

PROJECT: NSB

AT&T SITE ID: MI4740

AT&T FA#: 15443122

SBA SITE#: MI11404-S

MI4740
40451 12 MILE ROAD
NOVI, MI 48377

SITE PHOTO

PROJECT INFORMATION

SITE ADDRESS:	40451 12 MILE ROAD NOVI, MI 48377
COUNTY:	OAKLAND
SITE NAME:	MI4740
SITE NUMBER:	MI4740
FA NUMBER:	15443122
USID NUMBER:	305880
LATITUDE:	42° 29' 41.0" N
LONGITUDE:	83° 26' 54.3" W
GROUND ELEVATION:	907' AMSL
TOWER OWNER:	SBA COMMUNICATIONS CORPORATION 5900 BROKEN SOUND PARKWAY NW BOCA RATON, FL 33487
SITE ACQUISITION:	ANTHONY ZOLNIERZAK 412.269.5927
CONSTRUCTION MANAGER:	TYLER MILLER 913.458.6194
LEAD ENGINEER:	JORDAN HENRY 913.458.4293

PROJECT MANAGER:	STEPHANIE HARDWICK
PHONE:	317.822.8969
APPLICANT:	AT&T MOBILITY
CONTACT:	–
PHONE:	–

AREA MAP

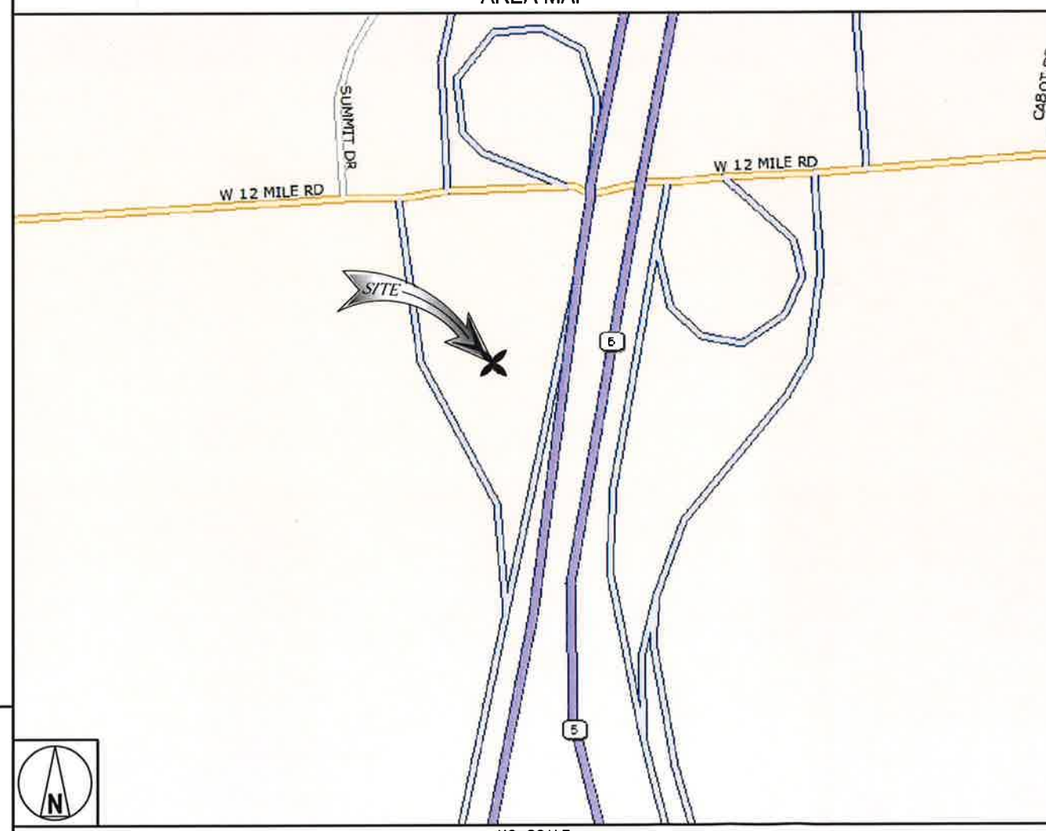

NO SCALE

ENGINEERING

2015 MICHIGAN BUILDING CODE
2017 MICHIGAN ELECTRICAL CODE
TIA-222-G OR LATEST EDITION

DRAWING INDEX

SHEET NO:	SHEET TITLE
TITLE PAGE	TITLE PAGE
–	–
C-1	OVERALL SITE PLAN
C-2	COMPOUND PLAN
C-3	WIC PLATFORM WITH GENERATOR
C-4	SITE DETAILS
C-5	SITE DETAILS
C-6	SIGNAGE DETAILS
C-7	SPECIAL INSPECTIONS
C-8	CONCRETE WORK NOTES
C-9	SITE WORK AND DRAINAGE NOTES
–	–
T-1	ELEVATION
T-2	ANTENNA LAYOUT
T-3	ANTENNA CONFIGURATION
T-4	EQUIPMENT DETAILS
T-5	EQUIPMENT DETAILS
T-6	STRUCTURAL NOTES
T-7	EQUIPMENT NOTES
–	–
E-1	ELECTRICAL SECTION NOTES
E-2	OVERALL ELECTRICAL PLAN
E-3	ONE-LINE GROUNDING DIAGRAM
E-4	GROUNDING DETAILS
E-5	GROUNDING DETAILS
E-6	GROUNDING DETAILS
–	–
N-1	GENERAL NOTES
N-2	GENERAL NOTES
–	–
–	AT&T RF PLUMBING DIAGRAMS ATTACHED

RECEIVED
MAY 20 2022
CITY OF NOVI
COMMUNITY DEVELOPMENT

REFERENCE MATERIALS

THESE LTE DRAWINGS ARE BASED ON THE AT&T RFDS DATED 01/03/2022

11"x17" PLOT WILL BE HALF SCALE UNLESS OTHERWISE NOTED

CONTRACTOR SHALL VERIFY ALL PLANS & EXISTING DIMENSIONS & CONDITIONS ON THE JOB SITE & SHALL IMMEDIATELY NOTIFY THE ENGINEER IN WRITING OF ANY DISCREPANCIES BEFORE PROCEEDING WITH THE WORK OR BE RESPONSIBLE FOR SAME

TO OBTAIN LOCATION OF PARTICIPANTS UNDERGROUND FACILITIES BEFORE YOU DIG IN MICHIGAN, CALL MISS DIG

811 OR (800) 482-7171
www.missdig.org

48 HOURS BEFORE YOU DIG

-THESE PLANS ADHERE TO ALL OF THE REQUIREMENTS CALLED OUT IN THE JURISDICTION PLANNING AND ZONING FOR ANTENNAS AND SUPPORT STRUCTURES WHERE SITE IS LOCATED.
-SUBCONTRACTOR SHALL VERIFY ALL PLANS AND EXISTING CONDITIONS ON SITE. IMMEDIATELY NOTIFY ENGINEER OF ANY DISCREPANCIES PRIOR TO PERFORMING ANY WORK OR BE RESPONSIBLE FOR THE SAME

APPLICANT/OWNER:

AT&T MOBILITY

16025 NORTHLAND DR
SOUTHFIELD, MI 48075

PREPARED BY:

BLACK & VEATCH

6800 W. 115TH ST, SUITE 2292
OVERLAND PARK, KANSAS 66211
(913) 458-2000

PROJECT NUMBER: 129391

STATE OF MICHIGAN
JOSHUA R. TURNER
No. 6201310514
LICENSED PROFESSIONAL ENGINEER
Turner, Josh
05/17/2022

IT IS A VIOLATION OF LAW FOR ANY PERSON, UNLESS THEY ARE ACTING UNDER THE DIRECTION OF A LICENSED PROFESSIONAL ENGINEER, TO ALTER THIS DOCUMENT.

LANDLORD/PROPERTY OWNER SIGNATURE

REV	DATE	DESCRIPTION
0	05.17.22	ISSUED FOR CONSTRUCTION

PROJECT LOCATION: USID (305880)

MI4740

40451 12 MILE ROAD
NOVI, MI 48377

DRAWING DESCRIPTION:

TITLE PAGE

DRAWING NUMBER:

TITLE PAGE

THIS DRAWING IS NOT A SITE SURVEY

THE PURPOSE OF THIS DRAWING IS TO SHOW HOW THE DEVELOPED SITE RELATES TO THE PARENT PARCEL AND ADJACENT PROPERTIES.

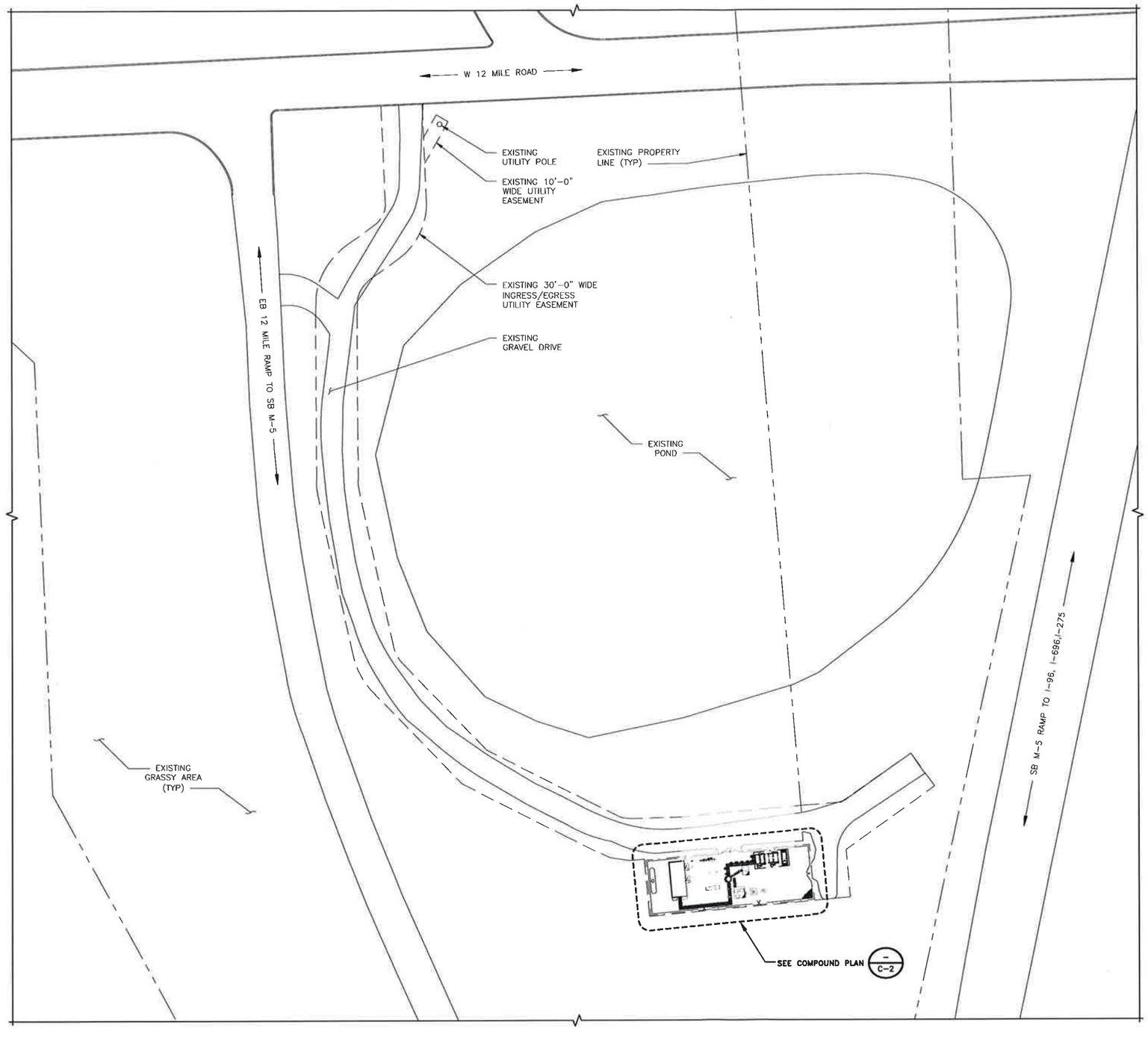

N

OVERALL SITE PLAN

40' 20' 0 40' 80'
1"=40'

1

APPLICANT/OWNER:

AT&T MOBILITY

16025 NORTHLAND DR
SOUTHFIELD, MI 48075

PREPARED BY:

BLACK & VEATCH

6800 W. 115TH ST, SUITE 2292
OVERLAND PARK, KANSAS 66211
(913) 458-2000

PROJECT NUMBER: 129391

STATE OF MICHIGAN
JOSHUA R. TURNER
No. 6201310514
LICENSED PROFESSIONAL ENGINEER
05/17/2022

IT IS A VIOLATION OF LAW FOR ANY PERSON, UNLESS THEY ARE ACTING UNDER THE DIRECTION OF A LICENSED PROFESSIONAL ENGINEER, TO ALTER THIS DOCUMENT.

LANDLORD/PROPERTY OWNER SIGNATURE

REV	DATE	DESCRIPTION
0	05.17.22	ISSUED FOR CONSTRUCTION

PROJECT LOCATION: USID (305880)

MI4740

40451 12 MILE ROAD
NOVI, MI 48377

DRAWING DESCRIPTION:

OVERALL SITE PLAN

DRAWING NUMBER:

C-1

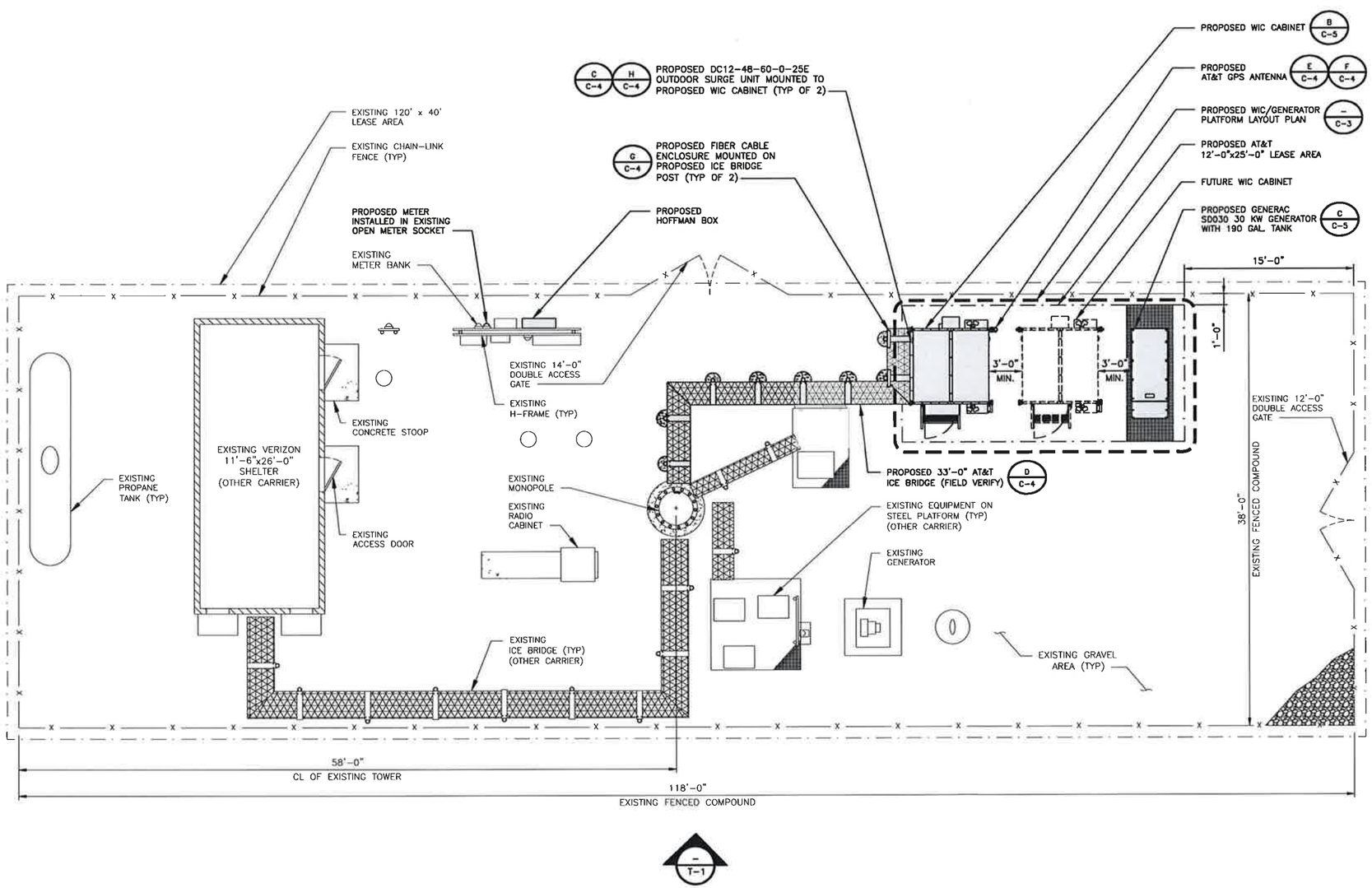

THIS IS NOT AN ALL INCLUSIVE LIST. CONTRACTOR SHALL UTILIZE SPECIFIED EQUIPMENT PART OR ENGINEER APPROVED EQUIVALENT. CONTRACTOR SHALL VERIFY ALL NEEDED EQUIPMENT TO PROVIDE A FUNCTIONAL SITE.

THE PROJECT GENERALLY CONSISTS OF THE FOLLOWING:

INSTALL (1) KENWOOD T1512KT12H-153126-H3 PLATFORM (OR ENGINEER APPROVED EQUAL)
INSTALL (6) COMMSCOPE NNH4-65C-R6-V3
INSTALL (3) NOKIA AEQK ANTENNAS
INSTALL (3) NOKIA AEQU ANTENNAS
INSTALL (3) AIRSCALE TRI RRH 4T4R B12/14/29 370W AHLBBA
INSTALL (3) AIRSCALE DUAL RRH 4T4R B25/66 320W AHFIB
INSTALL (3) AIRSCALE RRH 4T4R B5 160W AHCA
INSTALL (3) AIRSCALE RRH 4T4R B30 100W AHNA
INSTALL (2) RAYCAP DC9-48-60-24-8C-EV SURGE UNITS
INSTALL (5) #6 DC POWER TRUNKS
INSTALL (2) 24-PAIR FIBER TRUNKS

PROPOSED-PLATFORM:
INSTALL (1) VERTIV XTE 802 CABINET, W/EQUIPMENT (NEQ20060)
INSTALL (1) GPS KIT
INSTALL (1) GENERAC SD030 30KW GENERATOR W/190 GALLON TANK

PROPOSED-SITE:
INSTALL (2) ROSENBERGER FB-15-ABOX FIBER ENCLOSURES
INSTALL (2) RAYCAP DC12-48-60-0-25E OUTDOOR SURGE UNITS
INSTALL APPROXIMATELY 33 LF OF ICE BRIDGE

AT&T TO VERIFY REQUIRED PLATFORM EQUIPMENT.

PROJECT DESCRIPTION

1. CONTRACTOR SHALL FIELD VERIFY ALL DIMENSIONS.
2. CONTRACTOR SHALL MAINTAIN A 10'-0" MINIMUM SEPARATION BETWEEN THE PROPOSED LTE GPS ANTENNA AND TRANSMITTING ANTENNAS.
3. PROPERTY LINES ARE APPROXIMATIONS ONLY.
4. ANTENNAS & MOUNTS OMITTED FOR CLARITY.
5. FOR FIBER TRUNK REF AT&T LTE GUIDE LINES REV. 1.9 PAGE 13 TABLE 2.1.2.
6. FOR DC POWER CABLE TRUNK REF AT&T LTE GUIDE LINES REV 1.9 PAGE 14 TABLE 2.1.3

NOTES

WOOD FENCE
CHAIN LINK FENCE
PROPOSED ICE BRIDGE
EXISTING ICE BRIDGE

COMPOUND PLAN

6' 4' 2' 0 5' 10'
3/16"=1'-0"

1

LEGEND

APPLICANT/OWNER:

AT&T MOBILITY

16025 NORTHLAND DR
SOUTHFIELD, MI 48075

PREPARED BY:

BLACK & VEATCH

6800 W. 115TH ST, SUITE 2292
OVERLAND PARK, KANSAS 66211
(913) 458-2000

PROJECT NUMBER: 129391

STATE OF MICHIGAN
JOSHUA R. TURNER
No. 6201310514
LICENSED PROFESSIONAL ENGINEER
05/17/2022

IT IS A VIOLATION OF LAW FOR ANY PERSON, UNLESS THEY ARE ACTING UNDER THE DIRECTION OF A LICENSED PROFESSIONAL ENGINEER, TO ALTER THIS DOCUMENT.

LANDLORD/PROPERTY OWNER SIGNATURE

REV	DATE	DESCRIPTION
0	05.17.22	ISSUED FOR CONSTRUCTION

PROJECT LOCATION: USID (305880)

MI4740

40451 12 MILE ROAD
NOVI, MI 48377

DRAWING DESCRIPTION:

COMPOUND PLAN

DRAWING NUMBER:

C-2

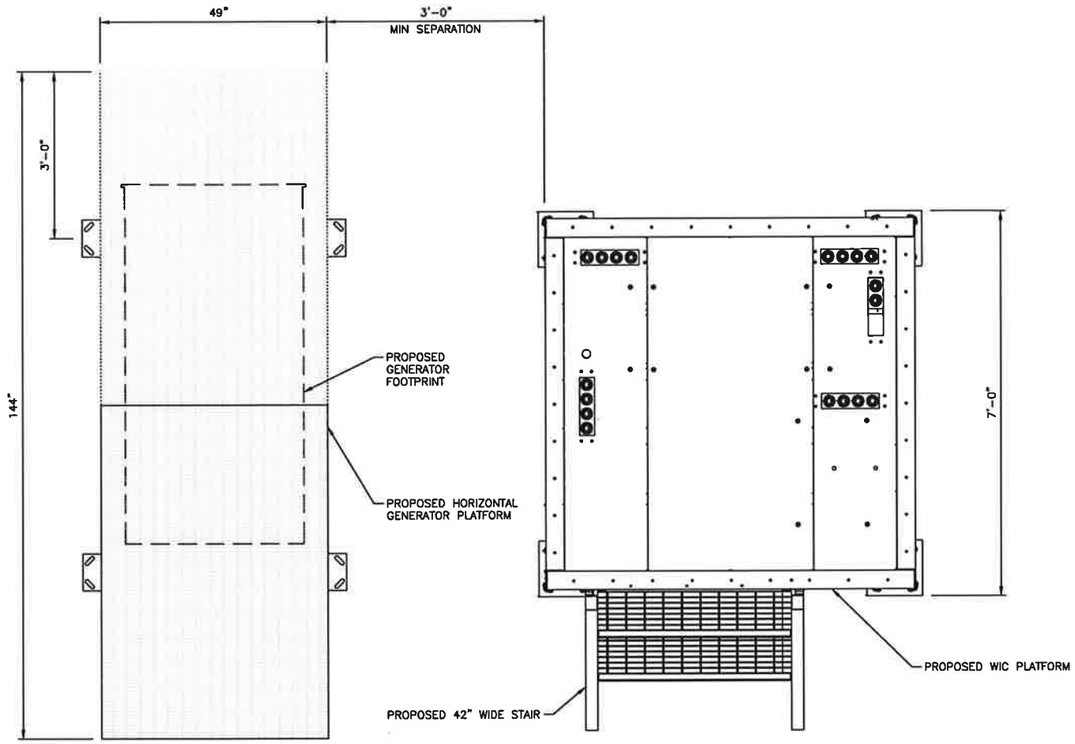

PLATFORM LAYOUT PLAN | NO SCALE | A

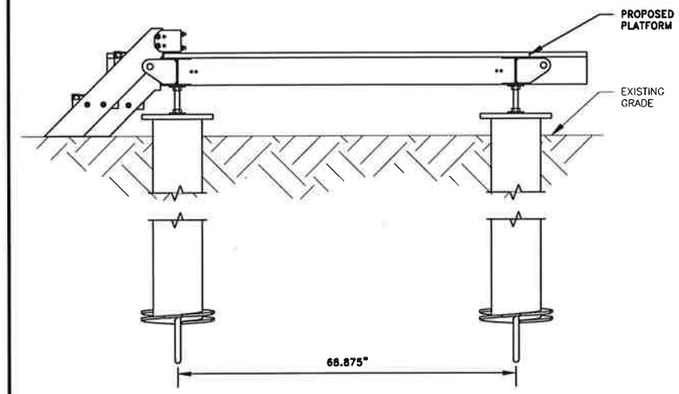

PLATFORM HELICAL MOUNT KIT (SIDE ELEVATION) | NO SCALE | B

NOTES:

1. DRAWINGS ARE FOR GRAPHIC REPRESENTATION OF THE FINAL ASSEMBLY. CONTRACTOR MUST REFERENCE MANUFACTURERS DRAWINGS PRIOR TO CONSTRUCTION.
2. PROPOSED WIC CABINET, GENERATOR CONNECTIONS TO THE PROPOSED PLATFORM, WIC PLATFORM, GENERATOR PLATFORM, HELICAL PIERS SYSTEM AND ALL HARDWARE AND CONNECTIONS ARE DESIGNED AND FABRICATED BY THE MANUFACTURER. CAPACITY VERIFICATION AND INSTALLATION SPECIFICATION ARE THE RESPONSIBILITY OF THE MANUFACTURER. CONTRACTOR SHALL REFER TO MANUFACTURER FOR DETAILED INSTALLATION SPECIFICATION AND CAPACITY REQUIREMENTS.

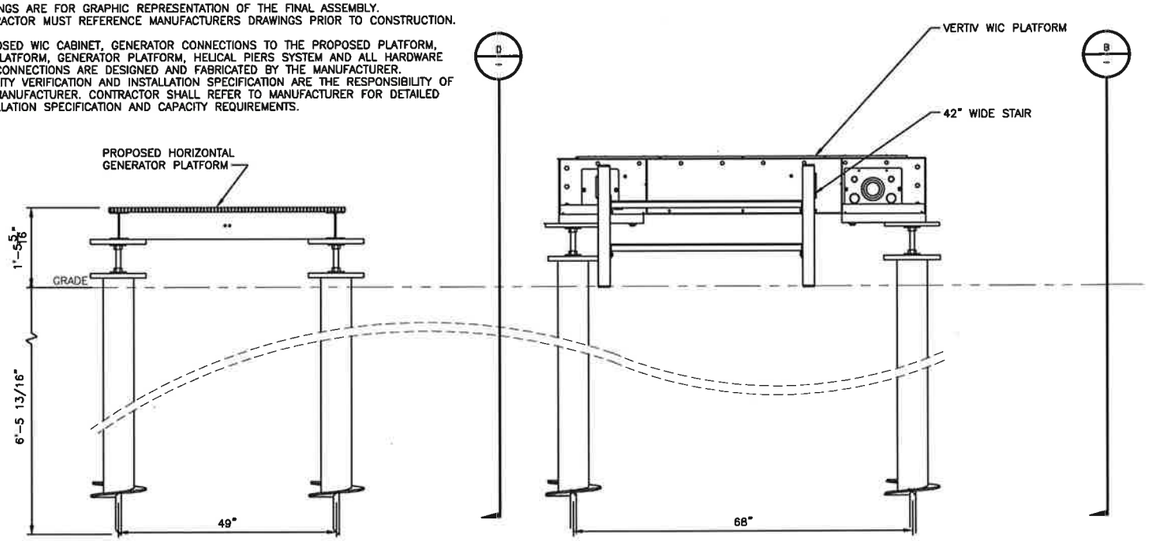

PLATFORM ELEVATION | NO SCALE | C

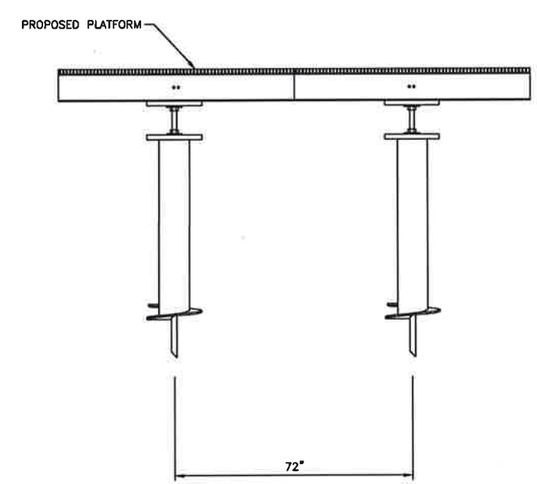

PLATFORM ELEVATION | NO SCALE | D

APPLICANT/OWNER:

AT&T MOBILITY

16025 NORTHLAND DR
SOUTHFIELD, MI 48075

PREPARED BY:

BLACK & VEATCH

6800 W. 115TH ST, SUITE 2292
OVERLAND PARK, KANSAS 66211
(913) 458-2000

PROJECT NUMBER: 129391

STATE OF MICHIGAN
JOSHUA R. TURNER
No. 6201310514
LICENSED PROFESSIONAL ENGINEER
05/17/2022

IT IS A VIOLATION OF LAW FOR ANY PERSON, UNLESS THEY ARE ACTING UNDER THE DIRECTION OF A LICENSED PROFESSIONAL ENGINEER, TO ALTER THIS DOCUMENT.

LANDLORD/PROPERTY OWNER SIGNATURE

REV	DATE	DESCRIPTION
0	05.17.22	ISSUED FOR CONSTRUCTION

PROJECT LOCATION: USID (305880)

MI4740

40451 12 MILE ROAD
NOVI, MI 48377

DRAWING DESCRIPTION:

WIC PLATFORM W/GENERATOR

DRAWING NUMBER:

C-3

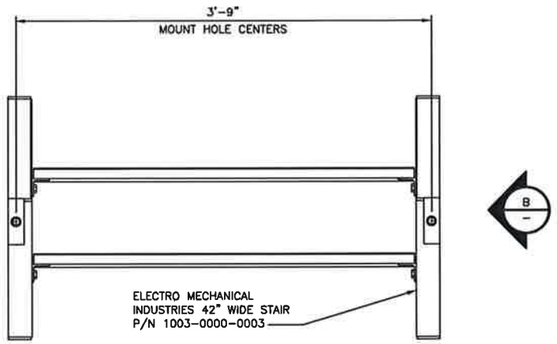

WIC STAIRS FRONT ELEVATION | NO SCALE | A

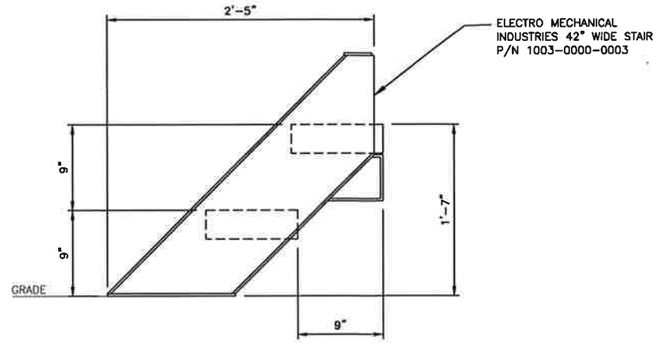

WIC STAIRS SIDE ELEVATION | NO SCALE | B

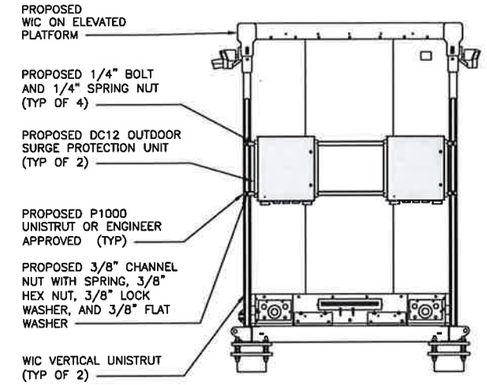

DC12 MOUNTING DETAIL | NO SCALE | C

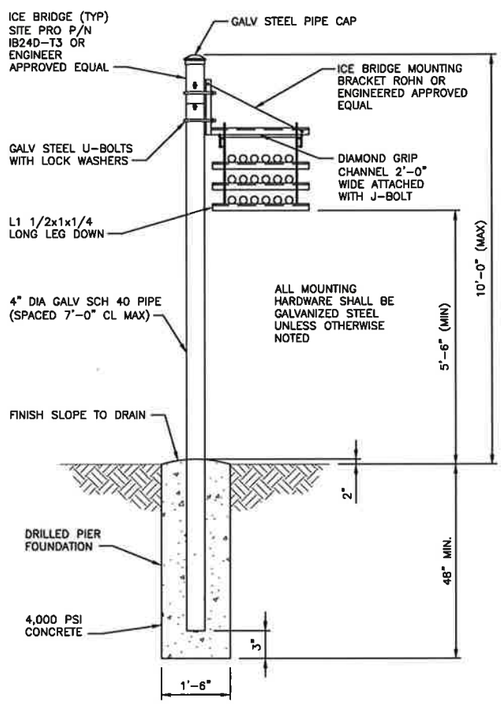

ICE BRIDGE DETAIL | NO SCALE | D

1. IT IS CRITICAL THAT THE GPS ANTENNA IS MOUNTED SUCH THAT IT IS WITHIN 2 DEGREES OF VERTICAL AND THE BASE OF THE ANTENNA IS WITHIN 2 DEGREES OF LEVEL.
2. DO NOT SWEEP TEST GPS ANTENNA.
3. PLACE PROPOSED GPS ANTENNA A MIN. OF 10' (3 METER) HORIZONTALLY FROM ALL EXISTING TRANSMITTING ANTENNAS.
4. THE GPS ANTENNA MOUNT IS DESIGNED TO FASTEN TO A STANDARD 3/4" DIAMETER, SCHEDULE 40, GALVANIZED STEEL OR STAINLESS STEEL PIPE. THE PIPE MUST NOT BE THREADED AT THE ANTENNA MOUNT END. THE PIPE SHALL BE CUT TO THE REQUIRED LENGTH (MINIMUM OF 18") USING A HAND OR ROTARY PIPE CUTTER TO ASSURE A SMOOTH AND PERPENDICULAR CUT. A HACK SAW SHALL NOT BE USED. THE CUT PIPE END SHALL BE DEBURRED AND SMOOTH EDGES IN ORDER TO SEAL AGAINST THE NEOPRENE GASKET ATTACHED TO THE ANTENNA MOUNT.

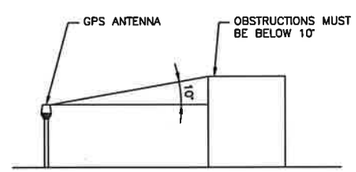

GPS SPECIFICATIONS | NO SCALE | E

NOTES

1. MIN 3 METERS (10 FT) SEPARATION BETWEEN ACTIVE eNODEB GPS AND E911 LMU GPS ANTENNAS.
2. INSTALL GPS ANTENNA AS SPECIFIED ON SITE PLAN. IF INSTALLING ON ICE BRIDGE, ENSURE THAT THE GPS IS A MINIMUM OF 24" ABOVE ALL STEEL

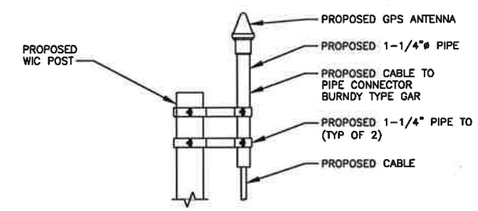

LTE GPS ANTENNA WIC MOUNT DETAIL | NO SCALE | F

ROSENBERGER FB-15-ABOX

DIMENSIONS, WxHxD:	18"x18"x3" (457x457x76mm) PLUS MOUNTING
ENCLOSURE TYPE:	ALUMINUM, NON-PAINTED
CABLE I/O:	CABLES CAN ENTER ANY OF THE 4 SIDES CABLES CAN EXIT ANY OF THE REMAINING 3 SIDES
MOUNTING:	WALL, H-BRACKET OR PIPE UP TO 3.5" O.D.
CAPACITY:	35 METERS OF 10MM FIBER TRUNK CABLE OR 75 METERS OF 7 MM FIBER JUMPER CABLE
TOTAL WEIGHT:	7 lbs (3.18 kg)

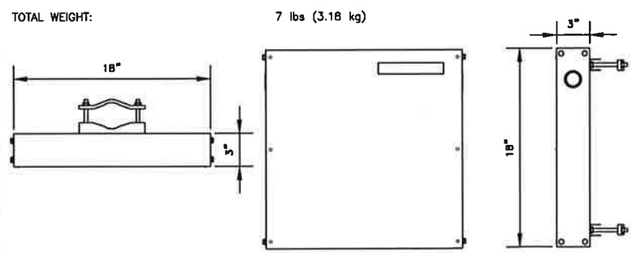

EXTERIOR FIBER CABLE ENCLOSURE | NO SCALE | G

RAYCAP DC12-48-60-0-25E

DIMENSIONS, WxHxD:	24"x24"x8" (609.6x609.6x203.2mm)
ENCLOSURE TYPE:	NEMA 4 RATED
INPUT SIZE QUANTITY & SIZE:	(4) 2.0" CONDUIT FITTINGS (4) M63 CABLE GLANDS
NOMINAL OPERATING VOLTAGE:	48 VDC
NOMINAL DISCHARGE CURRENT:	20 KA 8/20MS
MAXIMUM DISCHARGE CURRENT:	60 KA 8/20MS
MAXIMUM CONTINUOUS OPERATING VOLTAGE:	75 VDC
VOLTAGE PROTECTION RATING:	400 V
TOTAL WEIGHT:	56.3 LBS

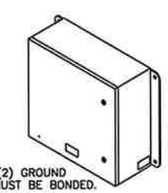

NOTE:
THERE ARE (2) GROUND AND BOTH MUST BE BONDED.

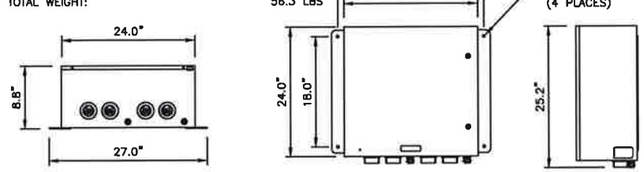

OUTDOOR DC SURGE PROTECTION SOLUTION | NO SCALE | H

APPLICANT/OWNER:

AT&T MOBILITY

16025 NORTHLAND DR
SOUTHFIELD, MI 48075

PREPARED BY:

BLACK & VEATCH

6800 W. 115TH ST, SUITE 2292
OVERLAND PARK, KANSAS 66211
(913) 458-2000

PROJECT NUMBER: 129391

STATE OF MICHIGAN
JOSHUA R. TURNER
No. 6201310514
LICENSED PROFESSIONAL ENGINEER
05/17/2022

IT IS A VIOLATION OF LAW FOR ANY PERSON, UNLESS THEY ARE ACTING UNDER THE DIRECTION OF A LICENSED PROFESSIONAL ENGINEER, TO ALTER THIS DOCUMENT.

LANDLORD/PROPERTY OWNER SIGNATURE

REV	DATE	DESCRIPTION
0	05.17.22	ISSUED FOR CONSTRUCTION

PROJECT LOCATION: USID (305880)

MI4740

40451 12 MILE ROAD
NOVI, MI 48377

DRAWING DESCRIPTION:

SITE DETAILS

DRAWING NUMBER:

C-4

NOTES:

1. SEPARATION DIMENSION TO BE VERIFIED WITH LOCAL UTILITY COMPANY REQUIREMENTS.

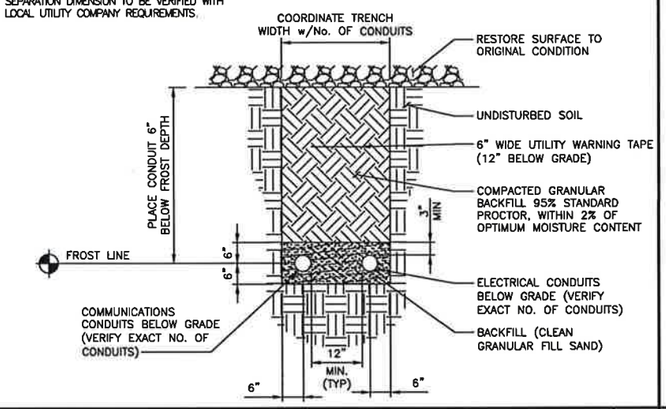

TYPICAL UNDERGROUND TRENCH DETAIL AND NOTES | NO SCALE | A

VERTIV – XTE 802, 6'x6' WALK IN CABINET (WIC)

DIMENSIONS, HxWxD: 113.0"x80.0"x80.0" (EXTERNAL)
105.0"x72.0"x72.0" (INTERNAL)

WEIGHT: ~4000 lbs (EMPTY)
~7000 lbs (FULL)

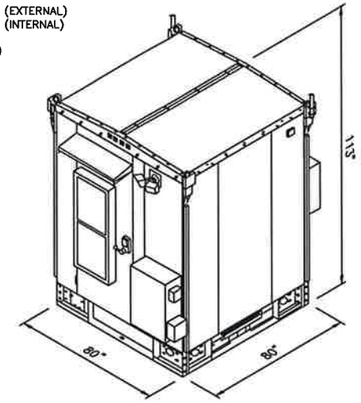

WALK IN CABINET DETAIL | NO SCALE | B

GENERAC (SD030) INDUSTRIAL GENERATOR W/ 190 GAL TANK

DIMENSIONS, W/TANK LxWxH: 94"x38"x61.1" (2407x965x1551mm)

DRY WEIGHT (30kw DIESEL): 510 lbs (232 kg)

RATED ENGINE SPEED (RPM): 1800

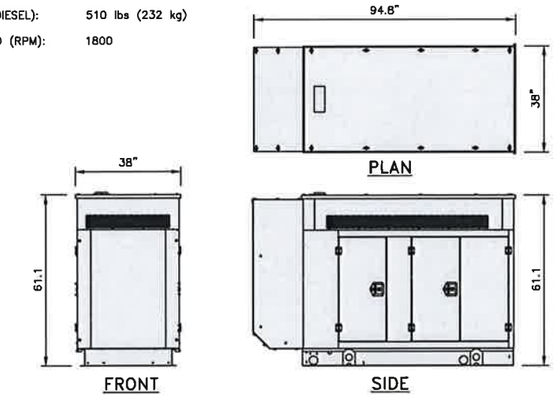

GENERAC GENERATOR DETAIL | NO SCALE | C

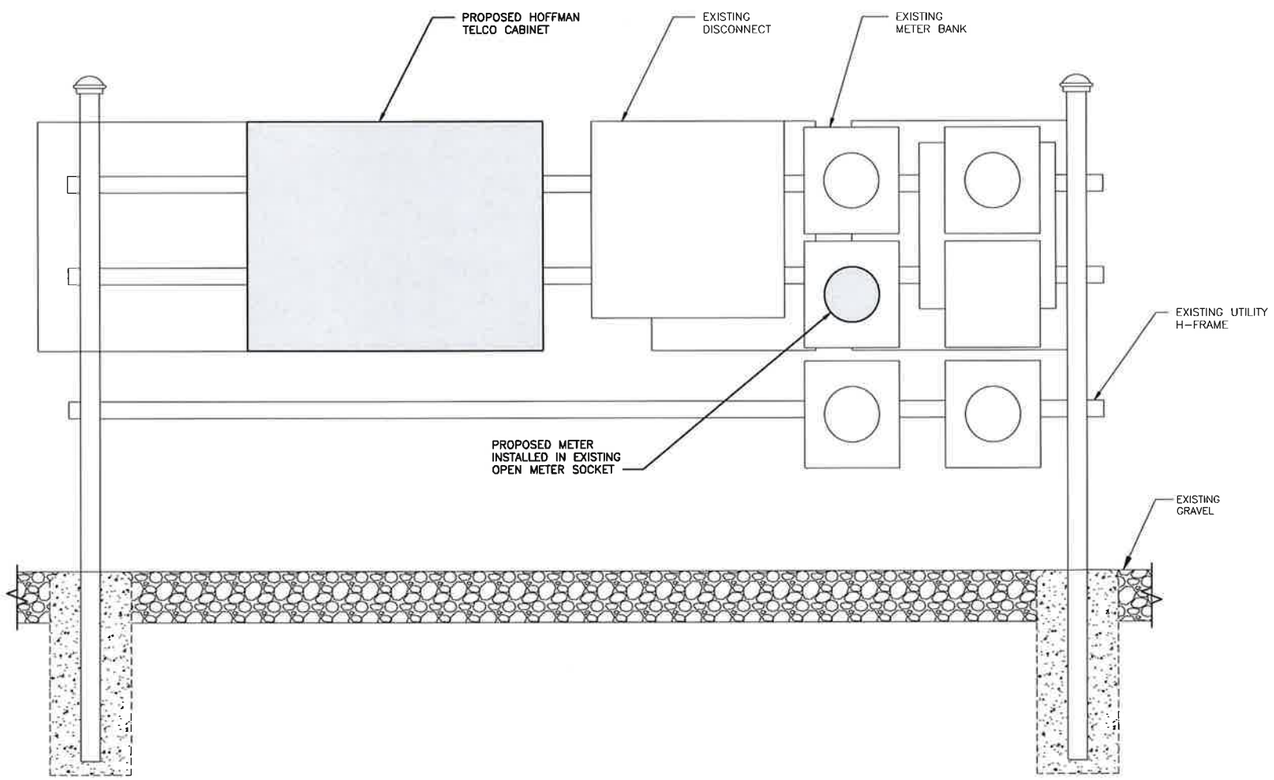

H-FRAME DETAIL | NO SCALE | D

NOT USED | NO SCALE | E

APPLICANT/OWNER:

AT&T MOBILITY

16025 NORTHLAND DR
SOUTHFIELD, MI 48075

PREPARED BY:

BLACK & VEATCH

6800 W. 115TH ST, SUITE 2292
OVERLAND PARK, KANSAS 66211
(913) 458-2000

PROJECT NUMBER: 129391

STATE OF MICHIGAN
JOSHUA R. TURNER
No. 6201310514
LICENSED PROFESSIONAL ENGINEER
05/17/2022

IT IS A VIOLATION OF LAW FOR ANY PERSON, UNLESS THEY ARE ACTING UNDER THE DIRECTION OF A LICENSED PROFESSIONAL ENGINEER, TO ALTER THIS DOCUMENT.

LANDLORD/PROPERTY OWNER SIGNATURE

REV	DATE	DESCRIPTION
0	05.17.22	ISSUED FOR CONSTRUCTION

PROJECT LOCATION: USID (305880)

MI4740

40451 12 MILE ROAD
NOVI, MI 48377

DRAWING DESCRIPTION:

SITE DETAILS

DRAWING NUMBER:

C-5

NOTICE

Beyond This Point you are entering a controlled area where RF emissions *may exceed* the FCC General Population Exposure Limits.

Follow all posted signs and site guidelines for working in a RF environment.

Ref: 47CFR 1.1307(b)

CAUTION

AT&T operates antennas at this site.

Beyond This Point you are entering an area where radio frequency (RF) fields may exceed the FCC Occupational Exposure Limits.

Follow safety guidelines for working inan RF environment.

Contact AT&T AT 800-638-2822, option 9 and 3, and follow their instructions prior to performing maintenance or repairs beyond this point

Caution Sign #CABTP-AL-057 This is AT&T Site_____

ALERTING SIGNS

ALERTING SIGN
(FOR CELL SITE BATTERIES)

ALERTING SIGN
(FOR DIESEL FUEL)

ALERTING SIGN
(FOR PROPANE)

WARNING!

DANGER DO NOT TOUCH TOWER!

SERIOUS "RF" BURN HAZARD!

MAINTAIN AN ADEQUATE CLEARANCE BETWEEN TOWER SUPPORTS AND GUY WIRES

FAILURE TO OBEY ALL POSTED SIGNS AND SITE GUIDELINES FOR WORKING IN A RADIO FREQUENCY ENVIRONMENT COULD RESULT IN SERIOUS INJURY. CONTACT CURRENT MAY EXCEED LIMITS PRESCRIBED IN ANSI/EEE C95.1-1992 FOR CONTROLLED ENVIRONMENTS.

AT&T

ALERTING SIGN

Property of AT&T

Authorized Personnel Only

In case of emergency, or prior to performing maintenance on this site, call 800-638-2822 and reference cell site number _____ FA# _____

AT&T

INFO SIGN #4

INFORMATION

AT&T Mobility operates telecommunications antennas at this location. Remain at least 3 feet away from any antenna and obey all posted signs.

Contact the owner(s) of the antenna(s) before working closer than 3 feet from the antenna.

Contact AT&T Mobility at 800-638-2822 prior to performing any maintenance or repairs near AT&T Mobility antennas.

This is Site#_____
Contact the management office if this door/hatch/gate is found unlocked.

INFORMACION

En esta propiedad se ubican antenas de telecomunicaciones operadas por AT&T Mobility. Favor mantener una distancia de no menos de 3 pies y obedecer todos los avisos.

Comuníquese con el propietario o los propietarios de las antenas antes de trabajar o realizar 4 una distancia de menos de 3 pies de la antena.

Comuníquese con AT&T Mobility 800-638-2822 antes de realizar cualquier mantenimiento o reparación cerca de la antenas de AT&T Mobility.

Esta es la estación base número _____

Favor comunicarse con la oficina de la administración del edificio si esta puerta o compuerta se encuentra sin candado.

INFO SIGN #1

INFORMATION

ACTIVE ANTENNAS ARE MOUNTED

☐ ON THE OUTSIDE OF THIS BUILDING
☐ BEHIND THIS PANEL
☐ ON THIS STRUCTURE

STAY BACK A MINIMUM OF 3 FEET FROM THESE ANTENNAS

Contact AT&T Mobility at 800-638-2822 and follow their instructions prior to performing any maintenance or repairs closer than 3 feet from the antennas.

This is AT&T Mobility site# _____

INFO SIGN #2

STAY BACK 3 FEET FROM ANTENNA

AT&T

INFO SIGN #3

GENERAL SIGNAGE GUIDELINES

Structure Type	INFO SIGN #1	INFO SIGN #2	INFO SIGN #3	INFO SIGN #4	Striping	NOTICE SIGN	CAUTION SIGN
Towers							
Monopole/Monopine/Monopalm	entrance gates, shelter doors **OR** on the outdoor cabinets	climbing side of the Tow er	On backside of Antennas	entrance gates, shelter doors **OR** on the outdoor cabinets			At the height of the first climbing step, min. 9ft above ground
SCE Tow ers/ Tow ers w ith high voltage	entrance gates, shelter doors **OR** on the outdoor cabinets	climbing side of the Tow er	On backside of Antennas	entrance gates, shelter doors **OR** on the outdoor cabinets			At the height of the first climbing step, min. 9ft above ground
Light Poles / Flag Poles	entrance gates, shelter doors **OR** on the outdoor cabinets	on the pole, no less than 3ft below the Antenna and no less than 9ft above ground	On backside of Antennas	entrance gates, shelter doors **OR** on the outdoor cabinets			
Utility Wood Poles (JPA)	entrance gates, shelter doors **OR** on the outdoor cabinets	on the pole, no less than 3ft below the Antenna and no less than 9ft above ground	On backside of Antennas	entrance gates, shelter doors **OR** on the outdoor cabinets		If GP max value of MPE at antenna level is: 0-99%: Notice sign; over 99%: Caution sign at no less than 3ft below antenna and 9ft above ground	
Microcells mounted on non-JPA poles	entrance gates, shelter doors **OR** on the outdoor cabinets	on the pole, no less than 3ft below the Antenna and no less than 9ft above ground	On backside of Antennas	entrance gates, shelter doors **OR** on the outdoor cabinets		Notice or Caution sign at no less than 9ft above ground: only if the exposure exceeds 90% of the General Public exposure at 6ft above ground or at outside surface of adjacent buildings	
Roof Tops							
At all access points to the roof	X			X			
On Antennas	X		X	X			
Concealed Antennas	X	X		X			
antennas mounted facing outside the building	X	X		X			
antennas on support structure	X	X		X			
Roofview Graph:							
Radiation area is w ithin 3ft from antenna	X	adjacent to each antenna		X		either Notice or Caution sign (based on Roofview results) at antennas/barrier	
Radiation area is beyond 3ft from antenna	X	adjacent to each antenna		X	diagonal, yellow striping as to Roofview graph		
Church Steeples	Access to steeple	adjacent to antennas if antennas are concealed	On backside of Antennas	Access to steeple			Caution sign at the antennas
Water Stations	Access to ladder	adjacent to antennas if antennas are concealed	On backside of Antennas	Access to ladder			Caution sign beside Info sign #1, min. 9ft above ground

Notes for Rooftop sites:

1. Either NOTICE or CAUTION signs need to be posted at each sector as close as possible to: the outer edge of the striped off area or the outer antennas of the sector.
2. If Roofview show s: only blue = Notice Sign, blue and yellow = Caution Sign, only yellow = Caution Sign to be installed.
3. Should the required striping area interfere w ith any structures or equipment (A/C, vents, roof hatch, doors, other antennas, dishes, etc.), please notify AT&T to modify the striping area, prior to starting the w ork

SIGNAGE GUIDELINES CHART

APPLICANT/OWNER:

AT&T MOBILITY

16025 NORTHLAND DR
SOUTHFIELD, MI 48075

PREPARED BY:

BLACK & VEATCH

6800 W. 115TH ST, SUITE 2292
OVERLAND PARK, KANSAS 66211
(913) 458-2000

PROJECT NUMBER: 129391

STATE OF MICHIGAN
JOSHUA R. TURNER
No. 6201310514
LICENSED PROFESSIONAL ENGINEER
05/17/2022

IT IS A VIOLATION OF LAW FOR ANY PERSON, UNLESS THEY ARE ACTING UNDER THE DIRECTION OF A LICENSED PROFESSIONAL ENGINEER, TO ALTER THIS DOCUMENT.

LANDLORD/PROPERTY OWNER SIGNATURE

REV	DATE	DESCRIPTION
0	05.17.22	ISSUED FOR CONSTRUCTION

PROJECT LOCATION: USID (305880)

MI4740

40451 12 MILE ROAD
NOVI, MI 48377

DRAWING DESCRIPTION:

SIGNAGE DETAILS

DRAWING NUMBER:

C-6

LIST OF SPECIAL INSPECTIONS

	LIST OF ITEMS REQUIRING SPECIAL INSPECTIONS
•	INSPECTION OF REINFORCING STEEL, INCLUDING PRE-STRESSING TENDONS, AND PLACEMENT PER SECTION 1910.4 OF THE IBC.
•	INSPECTION OF ANCHORS POST-INSTALLED IN HARDENED CONCRETE MEMBERS PER SECTION 1909.1 OF THE IBC.
•	AT THE TIME FRESH CONCRETE IS SAMPLED TO FABRICATED SPECIMENS FOR STRENGTH TEXT, PERFORM SLUMP AND AIR CONTENT TESTS, AND DETERMINE THE TEMPERATURE OF THE CONCRETE PER SECTION 1910.10 OF THE IBC.
•	INSPECTIONS OF SOILS PER TABLE 1705.6 OF THE IBC.

TABLE 1704.3
REQUIRED VERIFICATION AND INSPECTION OF STEEL CONSTRUCTION

VERIFICATION AND INSPECTION	CONTINUOUS	PERIODIC	REFERENCED STANDARD	IBC REFERENCE
1. MATERIAL VERIFICATION OF HIGH-STRENGTH BOLTS, NUTS AND WASHERS:				
a. IDENTIFICATION MARKINGS TO CONFORM TO ASTM STANDARDS SPECIFIED IN THE APPROVED CONSTRUCTION DOCUMENTS.	–	X	ACI 360, SEC. A3.3, APPLICABLE ASTM MATERIAL STANDARDS	–
b. MANUFACTURER'S CERTIFICATE OF COMPLIANCE REQUIRED.	–	X	–	–
2. INSPECTION OF HIGH-STRENGTH BOLTING:				
a. SNUG-TIGHT JOINTS	–	X	ACI 360, SEC. A3.3, APPLICABLE ASTM MATERIAL STANDARDS	1704.3.3
b. PRETENSIONED AND SLIP-CRITICAL JOINTS USING TURN-OF-NUT WITH MATCHMARKING, TWIST-OFF BOLT OR DIRECT TENSION INDICATOR METHODS OF INSTALLATION.	–	X		
c. PRETENSIONED AND SLIP-CRITICAL JOINTS USING TURN-OF-NUT WITHOUT MATCHMARKING OR CALIBRATED WRENCH METHODS OF INSTALLATION.	X	–		
3. MATERIAL VERIFICATION OF STRUCTURAL STEEL AND COLD-FORMED STEEL DECK:				
a. FOR STRUCTURAL STEEL, IDENTIFICATION MARKINGS TO CONFORM TO AISC 360.	–	X	ACI 360, SEC. M5.5	
b. FOR OTHER STEEL, IDENTIFICATION MARKINGS TO CONFORM TO ASTM STANDARDS SPECIFIED IN THE APPROVED CONSTRUCTION DOCUMENTS.	–	X	APPLICABLE ASTM MATERIAL STANDARDS	
c. MANUFACTURER'S CERTIFIED TEST REPORTS.	–	X		
4. MATERIAL VERIFICATION OF WELD FILLER MATERIALS:				
a. IDENTIFICATION MARKINGS TO CONFORM TO AWS SPECIFICATION IN THE APPROVED CONSTRUCTION DOCUMENTS.	–	X	AISC 360, SEC. A3.5 AND APPLICABLE AWS A5 DOCUMENTS	–
b. MANUFACTURER'S CERTIFICATE OF COMPLIANCE REQUIRED.	–	X	–	–
5. INSPECTION OF WELDING:				
a. STRUCTURAL STEEL AND COLD-FORMED STEEL DECK:				
1. COMPLETE AND PARTIAL JOINT PENETRATION GROOVE WELDS.	X	–	AWS D1.1	1704.3.1
2. MULTIPASS FILLET WELDS.	X	–		
3. SINGLE-PASS FILLET WELDS > 5/16".	X	–		
4. PLUG AND SLOT WELDS.	X	–		
5. SINGLE-PASS FILLET WELDS ≤ 5/16".	–	X		
6. FLOOR AND DECK WELDS.	–	X	AWS D1.3	
b. REINFORCING STEEL:				
1. VERIFICATION OF WELDABILITY OF REINFORCING STEEL OTHER THAN ASTM A 706.	–	X	AWS D1.4 ACI 318: SEC. 3.5.2	–
2. REINFORCING STEEL RESISTING FLEXURAL AND AXIAL FORCES IN INTERMEDIATE AND SPECIAL MOMENT FRAMES, AND BOUNDARY ELEMENTS OF SPECIAL STRUCTURAL WALLS OF CONCRETE AND SHEAR REINFORCEMENT.	X	–		
3. SHEAR REINFORCEMENT.	X	–		
4. OTHER REINFORCING STEEL.	–	X		
6. INSPECTION OF STEEL FRAME JOINT DETAILS FOR COMPLIANCE:				
a. DETAILS SUCH AS BRACING AND STIFFENING.	–	X	–	1704.3.2
b. MEMBER LOCATIONS.	–	X		
c. APPLICATION OF JOINT DETAILS AT EACH CONNECTION.	–	X		

TABLE 1704.7
REQUIRED VERIFICATION AND INSPECTION OF SOILS

VERIFICATION AND INSPECTION TASK	CONTINUOUS DURING TASK LISTED	PERIODIC DURING TASK LISTED
1. VERIFY MATERIALS BELOW SHALLOW FOUNDATIONS ARE ADEQUATE TO ACHEIVE THE DESIGN BEARING CAPACITY.	–	X
2. VERIFY EXCAVATIONS ARE EXTENDED TO PROPER DEPTH AND HAVE REACHED PROPER MATERIAL.	–	X
3. PERFORM CLASSIFICATION AND TESTING OF COMPACTED FILL MATERIALS.	–	X
4. VERIFY USE OF PROPER MATERIALS, DENSITIES AND LIFT THICKNESSES DURING PLACEMENT AND COMPACTION OF COMPACTED FILL.	X	–
5. PRIOR TO PLACEMENT OF COMPACTED FILL, OBSERVE SUBGRADE AND VERIFY THAT SITE HAS BEEN PREPARED PROPERLY.	–	X

TABLE 1705.3
REQUIRED VERIFICATION AND INSPECTION OF CONCRETE CONSTRUCTION

VERIFICATION AND INSPECTION	CONTINUOUS	PERIODIC	REFERENCED STANDARD	IBC REFERENCE
1. INSPECTION OF REINFORCING STEEL, INCLUDING PRE-STRESSING TENDONS, AND PLACEMENT	–	X	ACI 318: 3.5, 7.1-7.7	1910.4
2. INSPECTION OF REINFORCING STEEL WELDING ON ACCORDANCE WITH TABLE 1704.3, ITEM 5b.	–	–	AWS D1.4 ACI 318: 3.5.2	–
3. INSPECTION OF BOLTS TO BE INSTALLED IN CONCRETE PRIOR TO AND DURING PLACEMENT OF CONCRETE WHERE ALLOWABLE LOADS HAVE BEEN INCREASED WHERE STRENGTH DESIGN IS USED.	–	–	ACI 318: 8.1.3, 21.2.8	1908.5, 1909.1
4. INSPECTION OF ANCHORS INSTALLED IN HARDED CONCRETE.	–	X	ACI 318: 3.8.6, 8.1.3, 21.2.8	1909.1
5. VERIFYING USE OF REQUIRED DESIGN MIX.	–	X	ACI 318: Ch 4, 5.2-5.4	1904.2, 1910.2, 1910.3
6. AT THE TIME FRESH CONCRETE IS STAMPED TO FABRICATE SPECIMENS FOR STRENGTH TESTS, PERFORM SLUMP AND AIR CONTENT TESTS, AND DETERMINE THE TEMPERATURE OF THE CONCRETE.	X	–	ASTM C 172 ASTM C 31 ACI 318: 5.6, 5.8	1910.10
7. INSPECTION OF CONCRETE AND SHOTCRETE PLACEMENT FOR PROPER APPLICATION TECHNIQUES.	X	–	ACI 318: 5.9, 5.10	1910.6, 1910.7, 1910.8
8. INSPECTION FOR MAINTENANCE OF SPECIFIED CURING TEMPERATURE AND TECHNIQUES.	X	–	ACI 318: 5.9, 5.10	1910.9
9. INSPECTION OF PRE-STRESSED CONCRETE: a. APPLICATION OF PRE-STRESSING FORCES. b. GROUTING OF BONDED PRE-STRESSING TENDONS IN THE SEISMIC-FORCE RESISTING SYSTEM.	– –	– –	ACI 318: 18.20 ACI 318: 18.18.4	–
10. ERECTION OF PRECAST CONCRETE MEMBERS.	–	–	ACI 318: Ch. 16	–
11. VERIFICATION OF IN-SITU CONCRETE STRENGTH, PRIOR TO STRESSING OF TENDONS IN POST-TENSIONED CONCRETE AND PRIOR TO REMOVAL OF SHORES AND FORMS FROM BEAMS AND STRUCTURAL SLAB.	–	X	ACI 318: 6.2	–
12. INSPECT FRAMEWORK FOR SHAPE, LOCATION AND DIMENSIONS OF THE CONCRETE MEMBER BEING FORMED.	–	X	ACI 318: 6.1.1	–

TABLE 1705.6
REQUIRED VERIFICATION AND INSPECTION OF CONCRETE CONSTRUCTION

VERIFICATION AND INSPECTION	CONTINUOUS DURING TASK LISTED	PERIODICALLY DURING TASK LISTED
1. VERIFY MATERIALS BELOW SHALLOW FOUNDATIONS ARE ADEQUATE TO ACHIEVE THE DESIGN BEARING CAPACITY.	–	X
2. VERIFY EXCAVATIONS ARE EXTENDED TO PROPER DEPTH AND HAVE REACHED PROPER MATERIAL.	–	X
3. PERFORM CLASSIFICATION AND TESTING OF COMPACTED FILL MATERIALS.	–	X
4. VERIFY USE OF PROPER MATERIALS, DENSITIES AND LIFT THICKNESS DURING PLACEMENT AND COMPACTION OF COMPACTED FILL.	X	–
5. PRIOR TO PLACEMENT OF COMPACTED FILL, OBSERVE SUBGRADE AND VERIFY THAT SITE HAS BEEN PREPARED PROPERLY.	–	X

SPECIAL INSTRUCTIONS

APPLICANT/OWNER:

AT&T MOBILITY

16025 NORTHLAND DR
SOUTHFIELD, MI 48075

PREPARED BY:

BLACK & VEATCH

6800 W. 115TH ST, SUITE 2292
OVERLAND PARK, KANSAS 66211
(913) 458-2000

PROJECT NUMBER: 129391

STATE OF MICHIGAN
JOSHUA R. TURNER
No. 6201310514
LICENSED PROFESSIONAL ENGINEER
05/17/2022

IT IS A VIOLATION OF LAW FOR ANY PERSON, UNLESS THEY ARE ACTING UNDER THE DIRECTION OF A LICENSED PROFESSIONAL ENGINEER, TO ALTER THIS DOCUMENT.

LANDLORD/PROPERTY OWNER SIGNATURE

REV	DATE	DESCRIPTION
0	05.17.22	ISSUED FOR CONSTRUCTION

PROJECT LOCATION: USID (305880)

MI4740

40451 12 MILE ROAD
NOVI, MI 48377

DRAWING DESCRIPTION:

SPECIAL INSPECTIONS

DRAWING NUMBER:

C-7

PART 1 – GENERAL

1.1 SCOPE:

A. FORM WORK, REINFORCING STEEL, ACCESSORIES, CAST–IN PLACE CONCRETE, FINISHING, CURING AND TESTING FOR STRUCTURAL CONCRETE FOUNDATIONS.

1.2 REFERENCES:

A. ACI (AMERICAN CONCRETE INSTITUTE)

1. ACI 301 SPECIFICATION FOR STRUCTURAL CONCRETE FOR BUILDINGS.
2. ACI 304 REGOMMENDED PRACTICE FOR MEASURING, MIXING, TRANSPORTING AND PLACING CONCRETE.
3. ACI 305 RECOMMENDED PRACTICE FOR HOT WEATHER CONCRETING.
4. ACI 306 RECOMMENDED PRACTICE FOR COLD WEATHER CONCRETING.
5. ACI 308 STANDARD PRACTICE FOR CURING CONCRETING.
6. ACI 309 STANDARD PRACTICE FOR CONSOLIDATION OF CONCRETE.
7. ACI 318 BUILDING CODE REQUIREMENTS FOR REINFORCED CONCRETE.
8. ACI 347 RECOMMENDED PRACTICE FOR CONCRETE FORMWORK DRILL PIERS.

B. ASTM (AMERICAN SOCIETY FOR TESTING AND MATERIALS). THE APPLICABLE STANDARDS OF THE AMERICAN SOCIETY FOR TESTING AND MATERIALS ARE LISTED IN THE ACI STANDARDS AND ARE A PART OF THIS SPECIFICATION.

PART 2 – PRODUCTS

2.1 REINFORCING MATERIALS:

A. REINFORCING BARS: ASTM A615, GRADE 60, PROPOSED DEFORMED BILLET–STEEL BARS, PLAIN FINISH.

B. FURNISH CHAIRS, BOLSTERS, BAR SUPPORTS, SPACERS AS REQUIRED FOR SUPPORT OF REINFORCING STEEL AND WIRE FABRIC.

2.2 CONCRETE MATERIALS:

A. PORTLAND CEMENT SHALL BE TYPE II, CONFORMING TO ASTM C–150.

B. AGGREGATE SHALL CONFORM TO ASTM C–33.

1. FINE AGGREGATE SHALL BE UNIFORMLY GRADED, CLEAN SHARP, WASHED NATURAL, OR CRUSHED SAND, FREE FROM ORGANIC IMPURITIES.
2. COARSE AGGREGATE SHALL BE NATURAL WASHED GRAVEL OR WASHED CRUSHED ROCK HAVING HARD, STRONG, DURABLE PIECES, FREE FROM ADHERENT COATINGS.
3. MAXIMUM SIZE OF COARSE AGGREGATE SHALL BE 3/4 INCH IN ACCORDANCE WITH THE REQUIREMENTS OF ASTM C–33 GRADATION SIZE NO. 67.

C. WATER USED IN CONCRETE MIX SHALL BE POTABLE, CLEAN, AND FREE FROM OILS, ACIDS, SALTS, CHLORIDES, ALKALI, SUGAR, VEGETABLE, OR OTHER INJURIOUS SUBSTANCES.

D. THE CONCRETE SHALL CONTAIN AN AIR–ENTRAINING ADMIXTURE COMPLYING WITH THE REQUIREMENTS OF ASTM C–260 AND ACI 212. 1R AND A WATER– REDUCING ADMIXTURE COMPLYING WITH THE REQUIREMENTS OF ASTM C–494 AND ACI 212. 1R. ADMIXTURES SHALL BE PURCHASED AND BATCHED IN LIQUID SOLUTION. THE USE OF CALCIUM CHLORIDE OR AN ADMIXTURE CONTAINING CALCIUM CHLORIDE IS PROHIBITED. ADMIXTURES SHALL BE OF THE SAME MANUFACTURER TO ASSURE COMPATIBILITY. ACCEPTABLE MANUFACTURERS ARE:

1. W.R. GRACE
2. SIKA CORP.
3. MASTER BUILDERS
4. EUCLID CHEMICAL CO.
5. APPROVED EQUAL

E. CURING COMPOUND SHALL CONFORM TO ASTM C309, TYPE I, ID, CLASS A AND B AND ASTM C171 AS APPLICABLE.

2.3 CONCRETE MIX:

A. PROPORTION CONCRETE MIX IN ACCORDANCE WITH REQUIREMENTS OF ACI 301. THE STRENGTH OF CONCRETE SHALL BE AS INDICATED ON THE DRAWINGS. WHERE STRENGTH IS NOT CLEARLY INDICATED, CONCRETE SHALL HAVE A MINIMUM 28 DAY COMPRESSIVE STRENGTH OF 4000 PSI.

B. THE CONCRETE MIX SHALL BE DESIGNED FOR A MAXIMUM SLUMP OF THREE INCHES (PLUS OR MINUS 1–INCH) AT THE POINT OF DISCHARGE. MIXES OF THE STIFFEST CONSISTENCY THAT CAN BE EFFICIENTLY PLACED SHALL BE USED.

C. ALL CONCRETE SHALL BE TO SIX PERCENT (6%) AIR ENTRAINED (PLUS OR MINUS 1%).

D. ALL STRUCTURAL CONCRETE SHALL CONTAIN A WATER–REDUCING AGENT.

PART 3 – EXECUTION

3.1 GENERAL:

A. CONSTRUCT AND ERECT THE FORM WORK IN ACCORDANCE WITH ACI 301 AND ACI 347.

B. COLD–WEATHER CONCRETING SHALL BE IN ACCORDANCE WITH ACI 306.

C. HOT–WEATHER CONCRETING SHALL BE IN ACCORDANCE WITH ACI 305.

3.2 INSERTS, EMBEDDED COMPONENTS AND OPENINGS:

A. CONTRACTOR SHALL CHECK ALL CIVIL, ARCHITECTURAL, STRUCTURAL AND ELECTRICAL DRAWINGS FOR OPENINGS, SLEEVES, ANCHOR BOLTS, INSERTS AND OTHER ITEMS TO BE BUILT INTO THE CONCRETE WORK.

B. COORDINATE THE WORK OF OTHER SECTION IN FORMING AND SETTING OPENINGS. RECESSES, SLOTS, CHASES, ANCHORS, INSERTS AND OTHER ITEMS TO BE EMBEDDED.

C. EMBEDDED ITEMS SHALL BE SET ACCURATELY IN LOCATION, ALIGNMENT, ELEVATION AND PLUMBNESS, LOCATE AND MEASURE FROM ESTABLISHED SURVEYED REFERENCE BENCHMARKS.

D. EMBEDDED ITEMS SHALL BE ANCHORED INTO PLACE IN A MANNER TO PREVENT MOVEMENT DURING CONCRETE PLACEMENT AND CONSOLIDATION. COMPONENTS FORMING A PART OF A COMPLETE ASSEMBLY SHALL BE ALIGNED BEFORE ANCHORING INTO PLACE. PROVIDE TEMPORARY BRACING, ANCHORAGE, AND TEMPLATES AS REQUIRED TO MAINTAIN THE SETTING AND ALIGNMENT.

3.3 REINFORCEMENT PLACEMENT:

A. PLACE REINFORCEMENT ACCORDING TO CHECKED AND RELEASED DRAWINGS AND IN ACCORDANCE WITH ACI 301 AND ACI 318.

B. ACCURATELY POSITION, SUPPORT AND SECURE REINFORCEMENT AGAINST DISPLACEMENT FROM FORM WORK CONSTRUCTION OR CONCRETE PLACEMENT AND CONSOLIDATION. SUPPORT REINFORCING ON METAL CHAIRS, RUNNERS, BOLSTERS, SPACERS AND HANGERS.

C. SPLICES OF REINFORCING BARS SHALL BE CLASS B UNLESS SHOWN OTHERWISE ON THE DRAWINGS. SPLICES SHALL BE STAGGERED. FULL DEVELOPMENT LENGTH SHALL BE PROVIDED ACROSS JOINTS.

D. LOCATE REINFORCING TO PROVIDE CONCRETE COVER AND SPACING SHOWN ON THE DRAWINGS. MINIMUM COVER SHALL BE AS REQUIRED BY ACI 318.

E. WELDING OF AND TO ANY REINFORCING MATERIALS INCLUDING TACK WELDING OF CROSSING BARS IS STRICTLY PROHIBITED.

3.4 CONCRETE PLACEMENT:

A. PRIOR TO PLACING CONCRETE, THE FORMS AND REINFORCEMENT SHALL BE THOROUGHLY INSPECTED; ALL TEMPORARY BRACING, TIES AND CLEATS REMOVED; ALL OPENINGS FOR UTILITIES PROPERLY BOXED; ALL FORMS PROPERLY SECURED IN THERE CORRECT POSITION AND MADE TIGHT. ALL REINFORCEMENT AND EMBEDDED ITEMS SHALL BE SECURED IN THEIR PROPER LOCATIONS. ALL OLD AND DRY CONCRETE AND DIRT SHALL BE CLEANED OFF AND ALL STANDING WATER AND OTHER FOREIGN MATERIAL REMOVED.

B. PLACING CONCRETE SHALL BE IN ACCORDANCE WITH ACI 301 AND ACI 304 AND SHALL BE CARRIED OUT AT SUCH A RATE THAT THE CONCRETE PREVIOUSLY PLACED IS STILL PLASTIC AND INTEGRATED WITH THE FRESHLY PLACED CONCRETE. CONCRETING ONCE STARTED, SHALL BE CARRIED ON AS A CONTINUOUS OPERATION UNTIL THE SECTION IS COMPLETED. NO COLD JOINTS SHALL BE ALLOWED.

C. ALL CONCRETE SHALL BE THOROUGHLY CONSOLIDATED AND COMPACTED BY VIBRATION SPACING, RODDING, OR FORKING DURING THE OPERATION OF PLACING AND DEPOSITING IN ACCORDANCE WITH ACI 309. THE CONCRETE SHALL BE THOROUGHLY WORKED AROUND REINFORCEMENT, EMBEDDED ITEMS, AND INTO THE CORNER OF THE FORMS SO AS TO ELIMINATE ALL AIR AND STONE POCKETS.

3.5 FINISHING:

A. FINISHING OF THE FLOOR SLABS SHALL BE IN ACCORDANCE WITH ACI 302.1 SECTION 7.2 WITH A MINIMUM OF THREE TROWELINGS. THE SLAB FINISH TOLERANCE AS MEASURED IN ACCORDANCE WITH ASTM E 1155 SHALL HAVE AN OVERALL TEST NUMBER FOR FLATNESS, FF= 20 AND FOR LEVEL, FL=15. THE MINIMUM LOCAL NUMBER FOR FLATNESS, FF= 15 AND FOR LEVEL, FL=10.

B. SURFACE OF FLOOR SLAB SHALL RECEIVE TWO COATS OF CLEAR SEALER/HARDENER.

C. ABOVE GRADE WALL SURFACES SHALL HAVE A SMOOTH FORM FINISH AS DEFINED IN CHAPTER 10 OF ACI 301.

3.6 CURING:

A. FRESHLY DEPOSITED CONCRETE SHALL BE PROTECTED FROM PREMATURE DRYING AND EXCESSIVELY HOT AND COLD TEMPERATURES AND SHALL BE MAINTAINED WITH MINIMUM MOISTURE LOSS AT A RELATIVELY CONSTANT TEMPERATURE FOR A PERIOD OF TIME NECESSARY FOR THE HYDRATION OF THE CEMENT AND PROPER HARDENING OF THE CONCRETE.

B. CONCRETE SHALL BE KEPT CONTINUOUSLY MOIST AT LEAST OVERNIGHT, IMMEDIATELY FOLLOWING THE INITIAL CURING. BEFORE THE CONCRETE HAS DRIED, ADDITIONAL CURING SHALL BE ACCOMPLISHED BY ONE OF THE FOLLOWING MATERIALS OR METHODS:

1. PONDING OR CONTINUOUS SPRINKLING.
2. ABSORPTIVE MAT OR FABRIC KEPT CONTINUOUSLY WET.
3. NON–ABSORPTIVE FILM (POLYETHYLENE) OVER PREVIOUSLY SPRINKLED SURFACE.
4. SAND OR OTHER COVERING KEPT CONTINUOUSLY WET.
5. CONTINUOUS STEAM (NOT EXCEEDING 150° F) OR VAPOR MIST BATH.
6. SPRAYED–ON CURING COMPOUND APPLIED IN TWO COATS, SPRAYED IN PERPENDICULAR DIRECTION.

C. THE FINAL CURING SHALL CONTINUE UNTIL THE CUMULATIVE NUMBER OF DAYS OR FRACTION THEREOF, NOT NECESSARILY CONSECUTIVE, DURING WHICH TEMPERATURE OF THE AIR IN CONTACT WITH CONCRETE IS ABOVE 50° F HAS TOTALED SEVEN (7) DAYS. CONCRETE SHALL NOT BE PERMITTED TO FREEZE DURING THE CURING PERIOD. RAPID DRYING AT THE END OF THE CURING PERIOD SHALL BE PREVENTED.

CONCRETE WORK NOTES

APPLICANT/OWNER:

AT&T MOBILITY

16025 NORTHLAND DR
SOUTHFIELD, MI 48075

PREPARED BY:

BLACK & VEATCH

6800 W. 115TH ST, SUITE 2292
OVERLAND PARK, KANSAS 66211
(913) 458–2000

PROJECT NUMBER: 129391

STATE OF MICHIGAN
JOSHUA R. TURNER
No. 6201310514
LICENSED PROFESSIONAL ENGINEER
05/17/2022

IT IS A VIOLATION OF LAW FOR ANY PERSON, UNLESS THEY ARE ACTING UNDER THE DIRECTION OF A LICENSED PROFESSIONAL ENGINEER, TO ALTER THIS DOCUMENT.

LANDLORD/PROPERTY OWNER SIGNATURE

REV	DATE	DESCRIPTION
0	05.17.22	ISSUED FOR CONSTRUCTION

PROJECT LOCATION: USID (305880)

MI4740

40451 12 MILE ROAD
NOVI, MI 48377

DRAWING DESCRIPTION:

CONCRETE WORK NOTES

DRAWING NUMBER:

C-8

PART 1 – GENERAL

CLEARING, GRUBBING, STRIPPING, EROSION CONTROL, SURVEY, LAYOUT, SUBGRADE PREPARATION AND FINISH GRADING AS REQUIRED TO COMPLETE THE PROPOSED WORK SHOWN IN THESE PLANS.

1.1 REFERENCES:

A. DOT (STATE DEPARTMENT OF TRANSPORTATION STANDARD SPECIFICATIONS FOR HIGHWAY CONSTRUCTION–CURRENT EDITION).

B. ASTM (AMERICAN SOCIETY FOR TESTING AND MATERIALS).

C. OSHA (OCCUPATION SAFETY AND HEALTH ADMINISTRATION).

1.2 INSPECTION AND TESTING:

A. FIELD TESTING OF EARTHWORK COMPACTION AND CONCRETE CYLINDERS SHALL BE PERFORMED BY CONTRACTORS INDEPENDENT TESTING LAB. THIS WORK TO BE COORDINATED BY THE CONTRACTOR.

B. ALL WORK SHALL BE INSPECTED AND RELEASED BY THE GENERAL CONTRACTOR WHO SHALL CARRY OUT THE GENERAL INSPECTION OF THE WORK WITH SPECIFIC CONCERN TO PROPER PERFORMANCE OF THE WORK AS SPECIFIED AND/OR CALLED FOR ON THE DRAWINGS. IT IS THE CONTRACTOR'S RESPONSIBILITY TO REQUEST TIMELY INSPECTIONS PRIOR TO PROCEEDING WITH FURTHER WORK THAT WOULD MAKE PARTS OF WORK INACCESSIBLE OR DIFFICULT TO INSPECT.

1.3 SITE MAINTENANCE AND PROTECTION:

A. PROVIDE ALL NECESSARY JOB SITE MAINTENANCE FROM COMMENCEMENT OF WORK UNTIL COMPLETION OF THE SUBCONTRACT.

B. AVOID DAMAGE TO THE SITE AND TO EXISTING FACILITIES, STRUCTURES, TREES, AND SHRUBS DESIGNATED TO REMAIN. TAKE PROTECTIVE MEASURES TO PREVENT EXISTING FACILITIES THAT ARE NOT DESIGNATED FOR REMOVAL FROM BEING DAMAGED BY THE WORK.

C. KEEP SITE FREE OF ALL PONDING WATER.

D. PROVIDE EROSION CONTROL MEASURES IN ACCORDANCE WITH STATE DOT AND EPA REQUIREMENTS.

E. PROVIDE AND MAINTAIN ALL TEMPORARY FENCING, BARRICADES, WARNING SIGNALS AND SIMILAR DEVICES NECESSARY TO PROTECT AGAINST THEFT FROM PROPERTY DURING THE ENTIRE PERIOD OF CONSTRUCTION. REMOVE ALL SUCH DEVICES UPON COMPLETION OF THE WORK.

F. EXISTING UTILITIES: DO NOT INTERRUPT EXISTING UTILITIES SERVING FACILITIES OCCUPIED BY THE OWNER OR OTHERS, EXCEPT WHEN PERMITTED IN WRITING BY THE ENGINEER AND THEN ONLY AFTER ACCEPTABLE TEMPORARY UTILITY SERVICES HAVE BEEN PROVIDED.

1. PROVIDE A MINIMUM 48–HOUR NOTICE TO THE ENGINEER AND RECEIVE WRITTEN NOTICE TO PROCEED BEFORE INTERRUPTING ANY UTILITY SERVICE.

PART 2 – PRODUCTS

2.1 SUITABLE BACKFILL: ASTM D2321 (CLASS I, II, III OR IV) FREE FROM FROZEN LUMPS, REFUSE, STONES OR ROCKS LARGER THAN 3 INCHES IN ANY DIMENSION OR OTHER MATERIAL THAT MAY MAKE THE INORGANIC MATERIAL UNSUITABLE FOR BACKFILL.

2.2 NON–POROUS GRANULAR EMBANKMENT AND BACKFILL: ASTM D2321 (CLASS III, IVA OR IVB) COARSE AGGREGATE. FREE FROM FROZEN LUMPS, REFUSE, STONES OR ROCKS LARGER THAN 3 INCHES IN ANY DIMENSION OR OTHER MATERIAL THAT MAY MAKE THE INORGANIC MATERIAL UNSUITABLE FOR BACKFILL.

2.3 POROUS GRANULAR EMBANKMENT AND BACKFILL: ASTM D2321 (CLASS IA, IB OR II) COARSE AGGREGATE FREE FROM FROZEN LUMPS, REFUSE, STONES OR ROCKS LARGER THAN 3 INCHES IN ANY DIMENSION OR OTHER MATERIAL THAT MAY MAKE THE INORGANIC MATERIAL UNSUITABLE FOR BACKFILL.

2.4 SELECT STRUCTURAL FILL: GRANULAR FILL MATERIAL MEETING THE REQUIREMENTS OF ASTM E850–95. FOR USE AROUND AND UNDER STRUCTURES WHERE STRUCTURAL FILL MATERIAL ARE REQUIRED.

2.5 GRANULAR BEDDING AND TRENCH BACKFILL: WELL–GRADED SAND MEETING THE GRADATION REQUIREMENTS OF ASTM D2487 (SE OR SW–SM).

2.6 COARSE AGGREGATE FOR ACCESS ROAD SUBBASE COURSE SHALL CONFORM TO ASTM D2940.

2.7 UNSUITABLE MATERIAL: HIGH AND MODERATELY PLASTIC SILTS AND CLAYS (LL>45). MATERIAL CONTAINING REFUSE, FROZEN LUMPS, DEMOLISHED BITUMINOUS MATERIAL, VEGETATIVE MATTER, WOOD, STONES IN EXCESS OF 3 INCHES IN ANY DIMENSION, AND DEBRIS AS DETERMINED BY THE CONSTRUCTION MANAGER. TYPICALLY THESE WILL BE SOILS CLASSIFIED BY ASTM AS: PT, MH, CH, OH, ML, AND OL.

2.8 GEOTEXTILE FABRIC: MIRAFI 500X OR ENGINEER APPROVED EQUAL.

2.9 PLASTIC MARKING TAPE: SHALL BE ACID AND ALKALI RESISTANT POLYETHYLENE FILM SPECIFICALLY MANUFACTURED FOR MARKING AND LOCATING UNDERGROUND UTILITIES, 6 INCHES WIDE WITH A MINIMUM THICKNESS OF 0.004 INCH. TAPE SHALL HAVE MINIMUM STRENGTH OF 1500 PSI IN BOTH DIRECTIONS AND MANUFACTURED WITH INTEGRAL CONDUCTORS, FOIL BACKING OR OTHER MEANS TO ENABLE DETECTION BY A METAL DETECTOR WHEN BURIED UP TO 3 FEET DEEP. THE METALLIC CORE OF THE TAPE SHALL BE ENCASED IN A PROTECTIVE JACKET OR PROVIDED WITH OTHER MEANS TO PROTECT IT FROM CORROSION. TAPE COLOR SHALL BE RED FOR ELECTRIC UTILITIES AND ORANGE FOR TELECOMMUNICATION UTILITIES.

PART 3 – EXECUTION

3.1 GENERAL:

A. BEFORE STARTING GENERAL SITE PREPARATION ACTIVITIES, INSTALL EROSION AND SEDIMENT CONTROL MEASURES. THE WORK AREA SHALL BE CONSTRUCTED AND MAINTAINED IN SUCH CONDITION THAT IN THE EVENT OF RAIN THE SITE WILL BE DRAINED AT ANY TIME.

B. BEFORE ALL SURVEY, LAYOUT, STAKING, AND MARKING, ESTABLISH AND MAINTAIN ALL LINES, GRADES, ELEVATIONS AND BENCHMARKS NEEDED FOR EXECUTION OF THE WORK.

C. CLEAR AND GRUB THE AREA WITHIN THE LIMITS OF THE SITE. REMOVE TREES, BRUSH, STUMPS, RUBBISH AND OTHER DEBRIS AND VEGETATION RESTING ON OR PROTRUDING THROUGH THE SURFACE OF THE SITE AREA TO BE CLEARED.

1. REMOVE THE FOLLOWING MATERIALS TO A DEPTH OF NO LESS THAN 12 INCHES BELOW THE ORIGINAL GROUND SURFACE: ROOTS, STUMPS, AND OTHER DEBRIS, BRUSH, AND REFUSE EMBEDDED IN OR PROTRUDING THROUGH THE GROUND SURFACE, RAKE, DISK OR PLOW THE AREA TO A DEPTH OF NO LESS THAN 6 INCHES, AND REMOVE TO A DEPTH OF 12 INCHES ALL ROOTS AND OTHER DEBRIS THEREBY EXPOSED.

2. REMOVE TOPSOIL MATERIAL COMPLETELY FROM THE SURFACE UNTIL THE SOIL NO LONGER MEETS THE DEFINITION OF TOPSOIL. AVOID MIXING TOPSOIL WITH SUBSOIL OR OTHER UNDESIRABLE MATERIALS.

3. EXCEPT WHERE EXCAVATION TO GREATER DEPTH IS INDICATED, FILL DEPRESSIONS RESULTING FROM CLEARING, GRUBBING AND DEMOLITION WORK COMPLETELY WITH SUITABLE FILL.

A. REMOVE FROM THE SITE AND DISPOSE IN AN AUTHORIZED LANDFILL ALL DEBRIS RESULTING FROM CLEARING AND GRUBBING OPERATIONS. BURNING WILL NOT BE PERMITTED.

B. PRIOR TO EXCAVATING, THOROUGHLY EXAMINE THE AREA TO BE EXCAVATED AND/OR TRENCHED TO VERIFY THE LOCATIONS OF FEATURES INDICATED ON THE DRAWINGS AND TO ASCERTAIN THE EXISTENCE AND LOCATION OF ANY STRUCTURE, UNDERGROUND STRUCTURE, OR OTHER ITEM NOT SHOWN THAT MIGHT INTERFERE WITH THE PROPOSED CONSTRUCTION. NOTIFY THE CONSTRUCTION MANAGER OF ANY OBSTRUCTIONS THAT WILL PREVENT ACCOMPLISHMENT OF THE WORK AS INDICATED ON THE DRAWINGS.

C. SEPARATE AND STOCK PILE ALL EXCAVATED MATERIALS SUITABLE FOR BACKFILL. ALL EXCESS EXCAVATED AND UNSUITABLE MATERIALS SHALL BE DISPOSED OF OFF–SITE IN A LEGAL MANNER.

3.2 BACKFILL:

A. AS SOON AS PRACTICAL, AFTER COMPLETING CONSTRUCTION OF THE RELATED STRUCTURE, INCLUDING EXPIRATION OF THE SPECIFIED MINIMUM CURING PERIOD FOR CAST–IN–PLACE CONCRETE, BACKFILL THE EXCAVATION WITH APPROVED MATERIAL TO RESTORE THE REQUIRED FINISHED GRADE.

1. PRIOR TO PLACING BACKFILL AROUND STRUCTURES, ALL FORMS SHALL BE REMOVED AND THE EXCAVATION CLEANED OF ALL TRASH, DEBRIS, AND UNSUITABLE MATERIALS.

2. BACKFILL BY PLACING AND COMPACTING SUITABLE BACKFILL MATERIAL OR SELECT GRANULAR BACKFILL MATERIAL WHEN REQUIRED IN UNIFORM HORIZONTAL LAYERS OF NO GREATER THAN 8–INCHES LOOSE THICKNESS AND COMPACTED. WHERE HAND OPERATED COMPACTORS ARE USED, THE FILL MATERIAL SHALL BE PLACED IN LIFTS NOT TO EXCEED 4 INCHES IN LOOSE DEPTH AND COMPACTED.

3. WHENEVER THE DENSITY TESTING INDICATES THAT THE CONTRACTOR HAS NOT OBTAINED THE SPECIFIED DENSITY, THE SUCCEEDING LAYER SHALL NOT BE PLACED UNTIL THE SPECIFICATION REQUIREMENTS ARE MET UNLESS OTHERWISE AUTHORIZED BY THE GEOTECHNICAL ENGINEER. THE CONTRACTOR SHALL TAKE WHATEVER APPROPRIATE ACTION IS NECESSARY, SUCH AS DISKING AND DRYING, ADDING WATER, OR INCREASING THE COMPACTIVE EFFORT TO MEET THE MINIMUM COMPACTION REQUIREMENTS.

B. THOROUGHLY COMPACT EACH LAYER OF BACKFILL TO A MINIMUM OF 95 PERCENT OF THE MAXIMUM DRY DENSITY AS PROVIDED BY THE STANDARD PROCTOR TEST, ASTM D 698.

3.3 TRENCH EXCAVATION:

A. UTILITY TRENCHES SHALL BE EXCAVATED TO THE LINES AND GRADES SHOWN ON THE DRAWINGS OR AS DIRECTED BY THE GENERAL CONTRACTOR. PROVIDE SHORING, SHEETING AND BRACING AS REQUIRED TO PREVENT CAVING OR SLOUGHING OF THE TRENCH WALLS.

B. EXTEND THE TRENCH WIDTH A MINIMUM OF 6 INCHES BEYOND THE OUTSIDE EDGE OF THE OUTERMOST CONDUIT.

C. WHEN SOFT YIELDING, OR OTHERWISE UNSTABLE SOIL CONDITIONS ARE ENCOUNTERED, BACKFILL AT THE REQUIRED TRENCH TO A DEPTH OF NO LESS THAN 12 INCHES BELOW THE REQUIRED ELEVATION AND BACKFILL WITH GRANULAR BEDDING MATERIAL.

3.4 TRENCH BACKFILL:

A. PROVIDE GRANULAR BEDDING MATERIAL IN ACCORDANCE WITH THE DRAWINGS AND THE UTILITY REQUIREMENTS.

B. NOTIFY THE GENERAL CONTRACTOR 24 HOURS IN ADVANCE OF BACKFILLING.

C. CONDUCT UTILITY CHECK TESTS BEFORE BACKFILLING. BACKFILL AND COMPACT TRENCH BEFORE ACCEPTANCE TESTING.

D. PLACE GRANULAR TRENCH BACKFILL UNIFORMLY ON BOTH SIDES OF THE CONDUITS IN 6–INCH UNCOMPACTED LIFTS UNTIL 12 INCHES OVER THE CONDUITS. SOLIDLY RAM AND TAMP BACKFILL INTO SPACE AROUND CONDUITS.

E. PROTECT CONDUIT FROM LATERAL MOVEMENT, IMPACT DAMAGE, OR UNBALANCED LOADING.

F. ABOVE THE CONDUIT EMBEDMENT ZONE, PLACE AND COMPACT SATISFACTORY BACKFILL MATERIAL IN 8–INCH MAXIMUM LOOSE THICKNESS LIFTS TO RESTORE THE REQUIRED FINISHED SURFACE GRADE.

G. COMPACT FINAL TRENCH BACKFILL TO A DENSITY EQUAL TO OR GREATER THAN THAT OF THE EXISTING UNDISTURBED MATERIAL IMMEDIATELY ADJACENT TO THE TRENCH BUT NO LESS THAN A MINIMUM OF 95 PERCENT OF THE MAXIMUM DRY DENSITY AS PROVIDED BY THE STANDARD PROCTOR TEST, ASTM D 698.

3.5 AGGREGATE ACCESS ROAD:

A. CLEAR, GRUB, STRIP AND EXCAVATE FOR THE ACCESS ROAD TO THE LINES AND GRADES INDICATED ON THE DRAWINGS. SCARIFY TO A DEPTH OF 6 INCHES AND PROOF–ROLL. ALL HOLES, RUTS, SOFT PLACES AND OTHER DEFECTS SHALL BE CORRECTED.

B. THE ENTIRE SUBGRADE SHALL BE COMPACTED TO NOT LESS THAN 95 PERCENT OF THE MAXIMUM DRY DENSITY AS PROVIDED BY THE MODIFIED PROCTOR TEST, ASTM D 1557.

C. AFTER PREPARATION OF THE SUBGRADE IS COMPLETE THE GEOTEXTILE FABRIC (MIRAFI 500X) SHALL BE INSTALLED TO THE LIMITS INDICATED ON THE DRAWINGS BY ROLLING THE FABRIC OUT LONGITUDINALLY ALONG THE ROADWAY. THE FABRIC SHALL NOT BE DRAGGED ACROSS THE SUBGRADE. PLACE THE ENTIRE ROLL IN A SINGLE OPERATION, ROLLING OUT AS SMOOTHLY AS POSSIBLE.

1. OVERLAPS PARALLEL TO THE ROADWAY WILL BE PERMITTED AT THE CENTERLINE AND AT LOCATIONS BEYOND THE ROADWAY SURFACE WIDTH (I.E. WITHIN THE SHOULDER WIDTH) ONLY. NO LONGITUDINAL OVERLAPS SHALL BE LOCATED BETWEEN THE CENTERLINE AND THE SHOULDER. PARALLEL OVERLAPS SHALL BE A MINIMUM OF 3 FEET WIDE.

2. TRANSVERSE (PERPENDICULAR TO THE ROADWAY) OVERLAPS AT THE END OF A ROLL SHALL OVERLAP IN THE DIRECTION OF THE AGGREGATE PLACEMENT (PREVIOUS ROLL ON TOP) AND SHALL HAVE A MINIMUM LENGTH OF 3 FEET.

3. ALL OVERLAPS SHALL BE PINNED WITH STAPLES OR NAILS A MINIMUM OF 10 INCHES LONG TO INSURE POSITIONING DURING PLACEMENT OF AGGREGATE. PIN LONGITUDINAL SEAMS AT 25 FOOT CENTERS AND TRANSVERSE SEAMS EVERY 5 FEET.

D. THE AGGREGATE BASE AND SURFACE COURSES SHALL BE CONSTRUCTED IN LAYERS NOT MORE THAN 4 INCH (COMPACTED) THICKNESS. AGGREGATE TO BE PLACED ON GEOTEXTILE FABRIC SHALL BE END–DUMPED ON THE FABRIC FROM THE FREE END OF THE FABRIC OR OVER PREVIOUSLY PLACED AGGREGATE. THE FIRST LIFT SHALL BE BLADED DOWN TO A THICKNESS OF 8 INCHES PRIOR TO COMPACTION. AT NO TIME SHALL EQUIPMENT, EITHER TRANSPORTING THE AGGREGATE OR GRADING THE AGGREGATE, BE PERMITTED ON THE ROADWAY WITH LESS THAN 4 INCHES OF MATERIAL COVERING THE FABRIC.

E. THE AGGREGATE SHALL BE IMMEDIATELY COMPACTED TO NOT LESS THAN 95 PERCENT OF THE MAXIMUM DRY DENSITY AS PROVIDED BY THE MODIFIED PROCTOR TEST, ASTM D 1557 WITH A TAMPING ROLLER, OR WITH A PNEUMATIC–TIRED ROLLER, OR WITH A VIBRATORY MACHINE OR ANY COMBINATION OF THE ABOVE. THE TOP LAYER SHALL BE GIVEN A FINAL ROLLING WITH A THREE–WHEEL OR TANDEM ROLLER.

3.6 FINISH GRADING:

A. PERFORM ALL GRADING TO PROVIDE POSITIVE DRAINAGE AWAY FROM STRUCTURES AND SMOOTH, EVEN SURFACE DRAINAGE OF THE ENTIRE AREA WITHIN THE LIMITS OF CONSTRUCTION. GRADING SHALL BE COMPATIBLE WITH ALL SURROUNDING TOPOGRAPHY AND STRUCTURES.

B. UTILIZE SATISFACTORY FILL MATERIAL RESULTING FROM THE EXCAVATION WORK IN THE CONSTRUCTION OF FILLS, EMBANKMENTS AND FOR REPLACEMENT OF REMOVED UNSUITABLE MATERIALS.

C. ACHIEVE FINISHED GRADE BY PLACING A MINIMUM OF 4 INCHES OF 1/2" – 3/4" CRUSHED STONE ON TOP SOIL STABILIZER FABRIC.

D. REPAIR ALL ACCESS ROADS AND SURROUNDING AREAS USED DURING THE COURSE OF THIS WORK TO THEIR ORIGINAL CONDITION.

SITE WORK AND DRAINAGE NOTES

APPLICANT/OWNER:

AT&T MOBILITY

16025 NORTHLAND DR
SOUTHFIELD, MI 48075

PREPARED BY:

BLACK & VEATCH

6800 W. 115TH ST, SUITE 2292
OVERLAND PARK, KANSAS 66211
(913) 458–2000

PROJECT NUMBER: 129391

STATE OF MICHIGAN
JOSHUA R. TURNER
No. 6201310514
LICENSED PROFESSIONAL ENGINEER
05/17/2022

IT IS A VIOLATION OF LAW FOR ANY PERSON, UNLESS THEY ARE ACTING UNDER THE DIRECTION OF A LICENSED PROFESSIONAL ENGINEER, TO ALTER THIS DOCUMENT.

LANDLORD/PROPERTY OWNER SIGNATURE

REV	DATE	DESCRIPTION
0	05.17.22	ISSUED FOR CONSTRUCTION

PROJECT LOCATION: USID (305880)

MI4740

40451 12 MILE ROAD
NOVI, MI 48377

DRAWING DESCRIPTION:

SITE WORK AND DRAINAGE NOTES

DRAWING NUMBER:

C-9

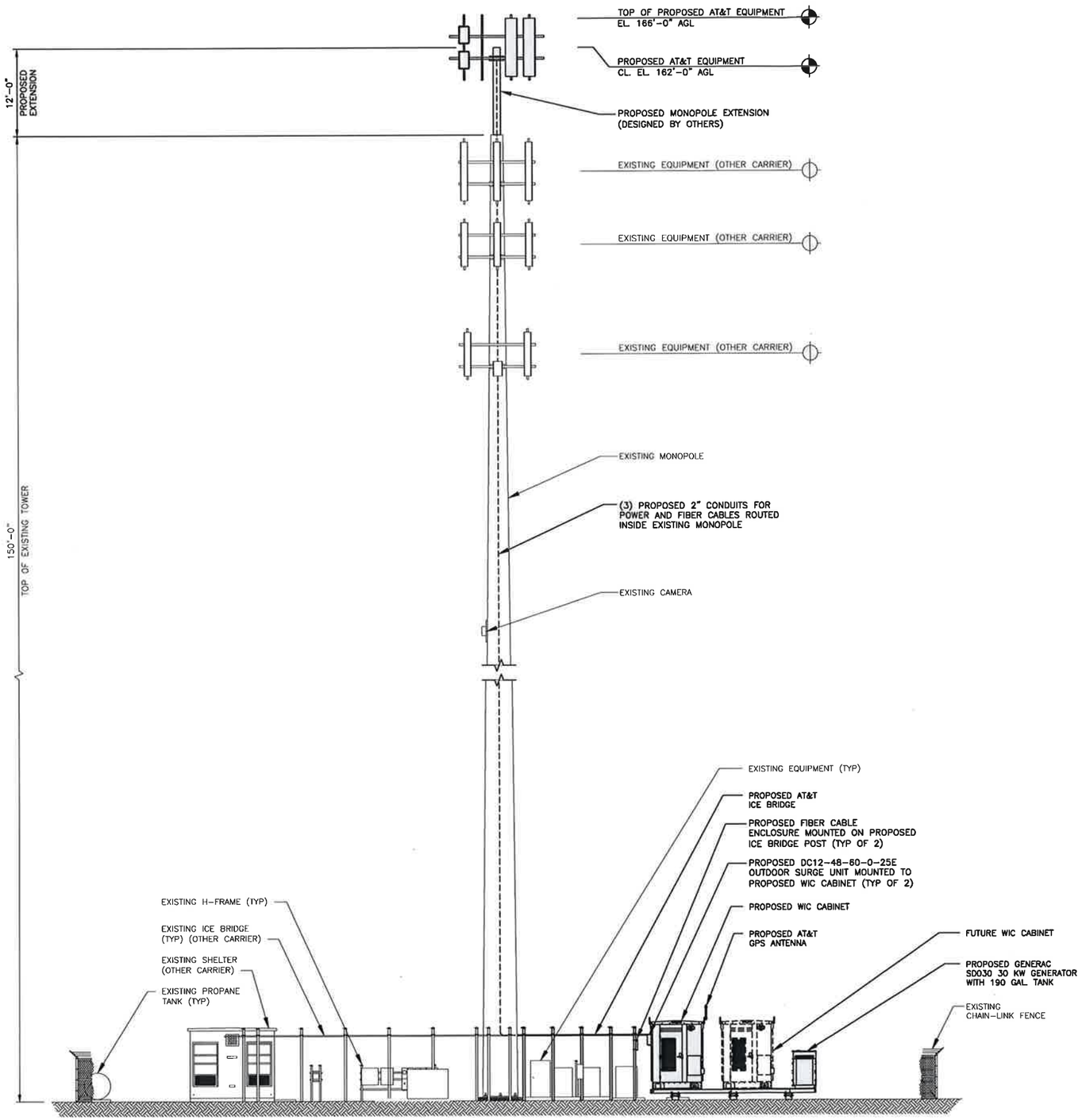

FINAL ELEVATION

8' 4' 0 8' 16'
1/8"=1'-0"

1

INSTALL:

- (12) PROPOSED ANTENNAS
- (12) PROPOSED RRHs
- (2) PROPOSED DC9 SURGE SUPPRESSION UNITS
- (2) PROPOSED 24-PAIR FIBER TRUNKS
- (5) PROPOSED #6 DC POWER TRUNKS
- (1) PROPOSED PLATFORM

TOWER SCOPE OF WORK 2

THE PASSING STRUCTURAL ANALYSIS FOR THE EXISTING TOWER AT THIS SITE WAS COMPLETED BY TOWER ENGINEERING SOLUTIONS ON FEBRUARY 09, 2022 CONFORMING TO TIA-222-G. ACCORDING TO THE TOWER ENGINEERING SOLUTIONS STRUCTURAL ANALYSIS, THE TOWER HAS SUFFICIENT CAPACITY.

STRUCTURAL ANALYSIS NOTE 3

THE PASSING ANTENNA MOUNT EVALUATION LETTER FOR THE EXISTING MOUNT WAS COMPLETED BY BLACK & VEATCH ON MAY 11, 2022. THE MOUNT HAS SUFFICIENT CAPACITY FOR THE EXISTING AND PROPOSED LOADING OBSERVED ON THESE CONSTRUCTION DRAWINGS.

MOUNT ANALYSIS NOTE 4

1. WHEN STACKING CABLES 3 OR MORE DEEP, USE STACKABLE SNAP-INS, TALLEY PART NUMBER SSH-158-3 (OR ENGINEER APPROVED EQUAL).

GENERAL NOTES 4

APPLICANT/OWNER:

AT&T MOBILITY

16025 NORTHLAND DR
SOUTHFIELD, MI 48075

PREPARED BY:

BLACK & VEATCH

6800 W. 115TH ST, SUITE 2292
OVERLAND PARK, KANSAS 66211
(913) 458-2000

PROJECT NUMBER: 129391

STATE OF MICHIGAN
JOSHUA R. TURNER
No. 6201310514
LICENSED PROFESSIONAL ENGINEER
05/17/2022

IT IS A VIOLATION OF LAW FOR ANY PERSON, UNLESS THEY ARE ACTING UNDER THE DIRECTION OF A LICENSED PROFESSIONAL ENGINEER, TO ALTER THIS DOCUMENT.

LANDLORD/PROPERTY OWNER SIGNATURE

REV	DATE	DESCRIPTION
0	05.17.22	ISSUED FOR CONSTRUCTION

PROJECT LOCATION: USID (305880)

MI4740

40451 12 MILE ROAD
NOVI, MI 48377

DRAWING DESCRIPTION:

ELEVATION

DRAWING NUMBER:

T-1

THIS DOCUMENT WAS PREPARED BASED ON THE INFORMATION PROVIDED TO BLACK & VEATCH. IF EXISTING CONDITIONS DO NOT REFLECT THOSE REPRESENTED, THESE CONSTRUCTION DRAWINGS ARE NO LONGER VALID.

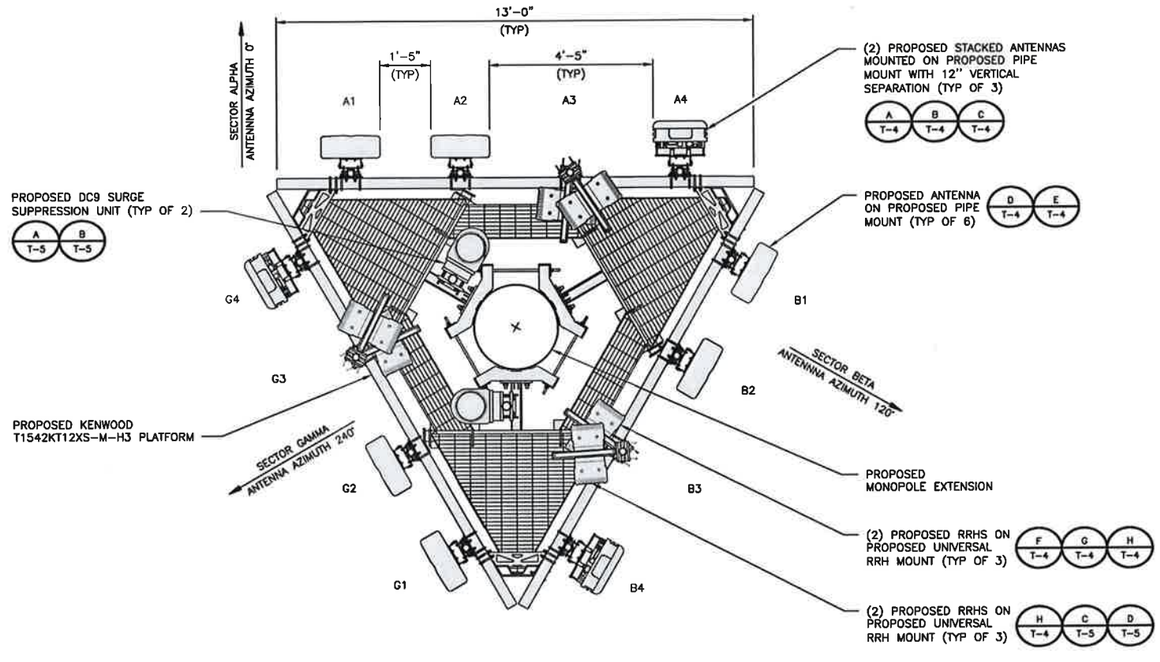

ANTENNA LAYOUT

12" 6" 0 1' 2' 3' 4' 5'
1/2"=1'-0"

1

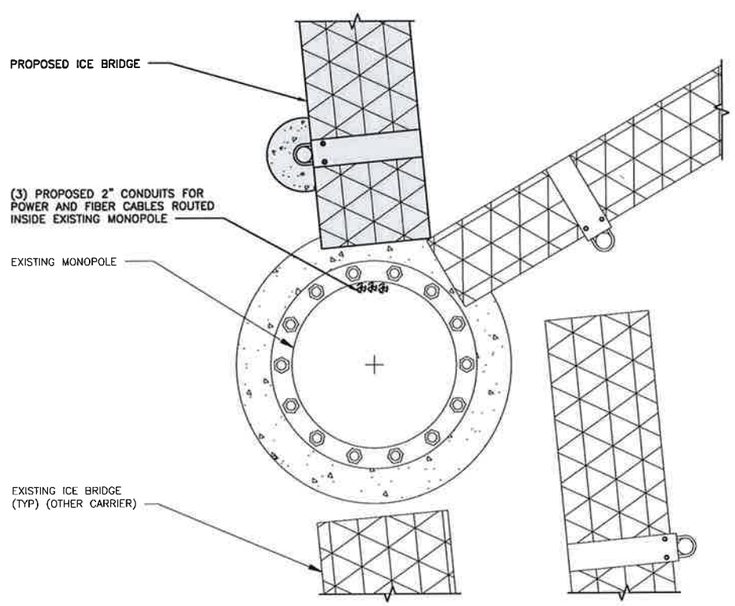

COAX ROUTING DIAGRAM

12" 6" 0 1' 2' 3'
3/4"=1'-0"

2

THE PASSING ANTENNA MOUNT EVALUATION LETTER FOR THE EXISTING MOUNT WAS COMPLETED BY BLACK & VEATCH ON MAY 11, 2022. THE MOUNT HAS SUFFICIENT CAPACITY FOR THE EXISTING AND PROPOSED LOADING OBSERVED ON THESE CONSTRUCTION DRAWINGS.

MOUNT ANALYSIS NOTE

3

1. CONTRACTOR SHALL REFER TO THE LATEST RFDS PRIOR TO THE CONSTRUCTION COMMENCING.
2. BLACK AND VEATCH RECOMMENDS EQUAL HORIZONTAL SPACING OF ANTENNAS TO ENSURE ADEQUATE WEIGHT DISTRIBUTION.
3. CONTRACTOR SHALL ENSURE 3'-0" MINIMUM SPACING BETWEEN LTE 700 B17 AND LTE 700 B14 (FIRSTNET) ANTENNAS. ANY VARIATION FROM THIS DIRECTIVE SHALL REQUIRE APPROVAL FROM THE AT&T PROJECT MANAGER PRIOR TO CLOSEOUT.

NOTES

4

1. GROUNDING SHALL BE IN ACCORDANCE WITH ATT-TP-76416.
2. CONTRACTOR SHALL HAVE A COMPLETE UNDERSTANDING OF THE CONTENTS OF AT&T STANDARD TP-76416.
3. ALL INSTALLATIONS SHALL BE FIELD VERIFIED.
4. ALL GROUNDING CONDUCTORS SHALL BE #2 AWG SUNLIGHT RESISTANT-TINNED STRANDED COPPER UNLESS NOTED OTHERWISE.
5. ALL RRH4X25-B30 RRH MODELS WILL REQUIRE A #6 AWG SUNLIGHT RESISTANT-TINNED STRANDED COPPER DUE TO THE LIMITED SPACE AT THE GROUNDING TERMINATION POINT.
6. ALL 2X60W 850 & 1900 RRHS MODELS WILL REQUIRE A TOP AND BOTTOM CONNECTION.

GROUNDING NOTES

5

APPLICANT/OWNER:

AT&T MOBILITY

16025 NORTHLAND DR
SOUTHFIELD, MI 48075

PREPARED BY:

BLACK & VEATCH

6800 W. 115TH ST, SUITE 2292
OVERLAND PARK, KANSAS 66211
(913) 458-2000

PROJECT NUMBER: 129391

STATE OF MICHIGAN
JOSHUA R. TURNER
No. 6201310514
LICENSED PROFESSIONAL ENGINEER
05/17/2022

IT IS A VIOLATION OF LAW FOR ANY PERSON, UNLESS THEY ARE ACTING UNDER THE DIRECTION OF A LICENSED PROFESSIONAL ENGINEER, TO ALTER THIS DOCUMENT.

LANDLORD/PROPERTY OWNER SIGNATURE

REV	DATE	DESCRIPTION
0	05.17.22	ISSUED FOR CONSTRUCTION

PROJECT LOCATION: USID (305880)

MI4740

40451 12 MILE ROAD
NOVI, MI 48377

DRAWING DESCRIPTION:

ANTENNA LAYOUT

DRAWING NUMBER:

T-2

THIS DOCUMENT WAS PREPARED BASED ON THE INFORMATION PROVIDED TO BLACK & VEATCH. IF EXISTING CONDITIONS DO NOT REFLECT THOSE REPRESENTED, THESE CONSTRUCTION DRAWINGS ARE NO LONGER VALID.

Antenna Requirements (verify with current RFDS)

Sector	Technology	Final Antenna Configuration	Antenna	Antenna Azimuth	Number of TMAs	Number of RRHs	RRH Model #	RRH Model #	Number of Surge Protection	Surge Protection Model #
A1	LTE	Commscope NNH4-65C-R6-V3	Proposed	0°	-	2	Airscale RRH 4T4R B5 160W AHCA	Airscale RRH 4T4R B30 100W AHNA	2	Raycap DC9
A2	LTE	Commscope NNH4-65C-R6-V3	Proposed	0°	-	2	AIRSCALE TRI RRH 4T4R B12/14/29 370W AHLBBA	Airscale Dual RRH 4T4R B25/66 320W AHFIB	-	-
A3	-	-	-	-	-	-	-	-	-	-
A4	C-BAND	Nokia AEQU+AEQK	Proposed	0°	-	-	-	-	-	-
B1	LTE	Commscope NNH4-65C-R6-V3	Proposed	120°	-	2	Airscale RRH 4T4R B5 160W AHCA	Airscale RRH 4T4R B30 100W AHNA	-	-
B2	LTE	Commscope NNH4-65C-R6-V3	Proposed	120°	-	2	AIRSCALE TRI RRH 4T4R B12/14/29 370W AHLBBA	Airscale Dual RRH 4T4R B25/66 320W AHFIB	-	-
B3	-	-	-	-	-	-	-	-	-	-
B4	C-BAND	Nokia AEQU+AEQK	Proposed	120°	-	-	-	-	-	-
G1	LTE	Commscope NNH4-65C-R6-V3	Proposed	240°	-	2	Airscale RRH 4T4R B5 160W AHCA	Airscale RRH 4T4R B30 100W AHNA	-	-
G2	LTE	Commscope NNH4-65C-R6-V3	Proposed	240°	-	2	AIRSCALE TRI RRH 4T4R B12/14/29 370W AHLBBA	Airscale Dual RRH 4T4R B25/66 320W AHFIB	-	-
G3	-	-	-	-	-	-	-	-	-	-
G4	C-BAND	Nokia AEQU+AEQK	Proposed	240°	-	-	-	-	-	-

FINAL ANTENNA CONFIGURATION

1

APPLICANT/OWNER:

AT&T MOBILITY

16025 NORTHLAND DR
SOUTHFIELD, MI 48075

PREPARED BY:

BLACK & VEATCH

6800 W. 115TH ST, SUITE 2292
OVERLAND PARK, KANSAS 66211
(913) 458-2000

PROJECT NUMBER: 129391

STATE OF MICHIGAN
JOSHUA R. TURNER
No. 6201310514
LICENSED PROFESSIONAL ENGINEER
05/17/2022

IT IS A VIOLATION OF LAW FOR ANY PERSON, UNLESS THEY ARE ACTING UNDER THE DIRECTION OF A LICENSED PROFESSIONAL ENGINEER, TO ALTER THIS DOCUMENT.

LANDLORD/PROPERTY OWNER SIGNATURE

REV	DATE	DESCRIPTION
0	05.17.22	ISSUED FOR CONSTRUCTION

PROJECT LOCATION: USID (305880)

MI4740

40451 12 MILE ROAD
NOVI, MI 48377

DRAWING DESCRIPTION:

ANTENNA CONFIGURATION

DRAWING NUMBER:

T-3

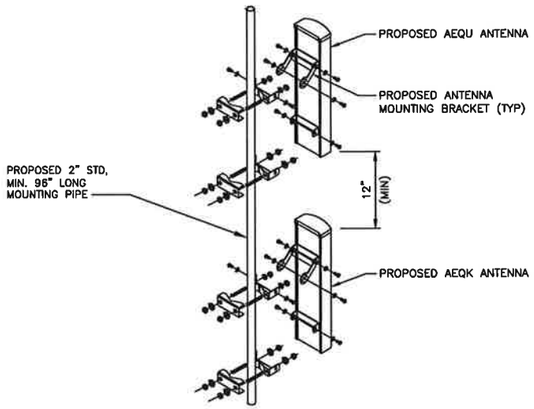

ANTENNA PIPE MOUNTING DETAIL | NO SCALE | A

AIRSCALE MAA 64T64R 192AE N77 200W AEQK

DIMENSIONS, HxWxD: 29.5"x17.7"x9.5" (749x450x241mm)

WEIGHT: 99.2 lbs (45kg)

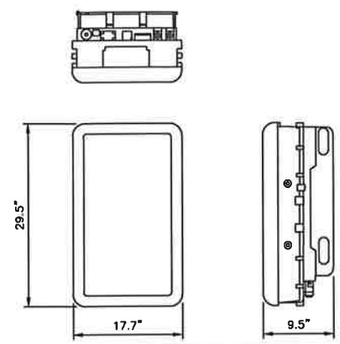

ANTENNA SPECIFICATION | NO SCALE | B

AIRSCALE MAA 64T64R 192AE N77 200W AEQU

DIMENSIONS, HxWxD: 29.5"x17.7"x9.5" (750x450x240mm)

WEIGHT: 99.2 lbs (45kg)

AEQU ANTENNA IS ALWAYS MOUNTED ABOVE AEQK.

* PAINTING REQUIREMENTS

PAINT TO BE SHERWIN WILLIAMS POLANE G PLUS POLYURETHANE ENAMEL mmWAVE TRANSPARENT PAINT (NO METALLICS)

NOT ALL SURFACES OF AEQU CAN BE PAINTED. THERMAL FINS AND AROUND CONNECTORS SHOULD BE MASKED.

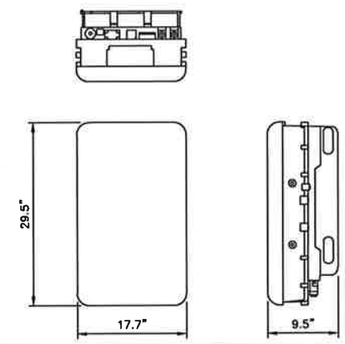

ANTENNA SPECIFICATION | NO SCALE | C

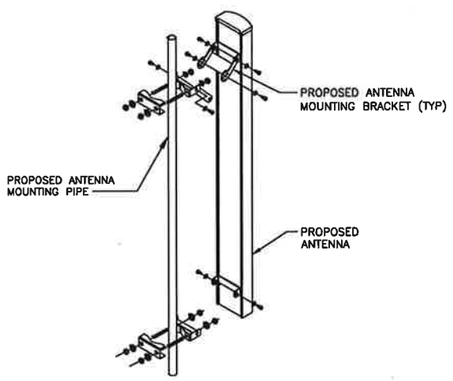

ANTENNA PIPE MOUNTING DETAIL | NO SCALE | D

COMMSCOPE NNH4-65C-R6-V3

DIMENSIONS HxWxD: 96.0"x19.6"x7.8" (2438x498x198mm)

WEIGHT: 102.1lbs

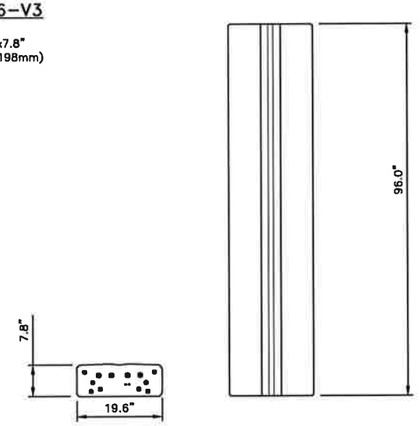

ANTENNA SPECIFICATIONS | NO SCALE | E

NOKIA TRIBAND RRH B12/14/29 AHLBBA

DIMENSIONS, HxWxD: 24"x14.9"x12.7" (610x358x189mm)

WEIGHT: 101.4 lbs (46kg)

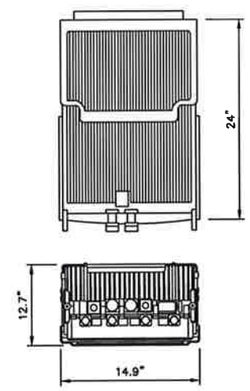

RRH SPECIFICATIONS | NO SCALE | F

AIRSCALE DUAL RRH 4T4R B25/66 320W AHFIB

DIMENSIONS, HxWxD: 28.7"x15.4"x9.4" (730x390x240mm)

WEIGHT: 88.2 lbs (40kg)

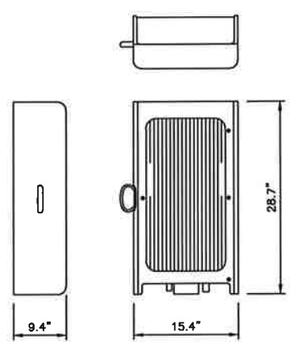

RRH SPECIFICATIONS | NO SCALE | G

COMMSCOPE MTC3326DHD

NOTE:
P100 UNISTRUT TO BE INSTALLED WITH TYPICAL BOLTING HARDWARE WHEN REQUIRED FOR MOUNTING RRHs ONLY.

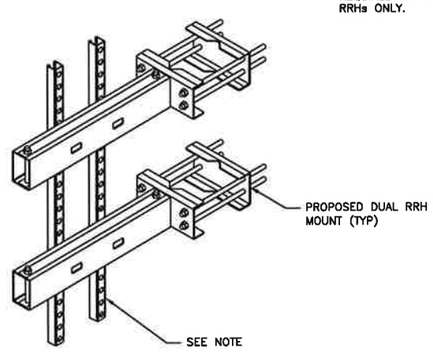

DUAL RRH MOUNTING DETAIL | NO SCALE | H

1. CLOSEOUT DELIVERABLE SHALL INCLUDE PHOTOS OF ALL MOUNTING HARDWARE INSTALLED TIGHT AND MARKED.
2. CONTRACTOR SHALL UTILIZE SPECIFIED EQUIPMENT MOUNTING HARDWARE UNLESS OTHERWISE APPROVED BY ENGINEERING.

NOTES | J

APPLICANT/OWNER:

AT&T MOBILITY

16025 NORTHLAND DR
SOUTHFIELD, MI 48075

PREPARED BY:

BLACK & VEATCH

6800 W. 115TH ST, SUITE 2292
OVERLAND PARK, KANSAS 66211
(913) 458-2000

PROJECT NUMBER: 129391

STATE OF MICHIGAN
JOSHUA R. TURNER
No. 6201310514
LICENSED PROFESSIONAL ENGINEER
05/17/2022

IT IS A VIOLATION OF LAW FOR ANY PERSON, UNLESS THEY ARE ACTING UNDER THE DIRECTION OF A LICENSED PROFESSIONAL ENGINEER, TO ALTER THIS DOCUMENT.

LANDLORD/PROPERTY OWNER SIGNATURE

REV	DATE	DESCRIPTION
0	05.17.22	ISSUED FOR CONSTRUCTION

PROJECT LOCATION: USID (305880)

MI4740

40451 12 MILE ROAD
NOVI, MI 48377

DRAWING DESCRIPTION:

EQUIPMENT DETAILS

DRAWING NUMBER:

T-4

RAYCAP DC9-48-60-24-8C-EV

ENCLOSURE DIMENSIONS, HxWxL:	31.4"x10.24"x18.28" (797x260x464mm)
NUMBER OF PROTECTED CIRCUITS:	9
NOMINAL OPERATING VOLTAGE:	-48 VDC, (MAX CONTINUOUS: 60VDC)
NOMINAL DISCHARGE CURRENT:	20 kA 8/20µs (MAX IMPULSE:12.5 kA 10/3500µs)
VOLTAGE PROTECTION RATING:	330 V
WIND LOADING:	150 mph SUSTAINED (105.7 lbs) 195 mph GUST (213.6 lbs)
TOTAL WEIGHT:	26.2 lbs

* DETAIL IS FOR GRAPHIC REPRESENTATION, CONTRACTOR MUST REFERENCE MANUFACTURERS DRAWINGS PRIOR TO CONSTRUCTION.

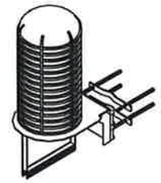

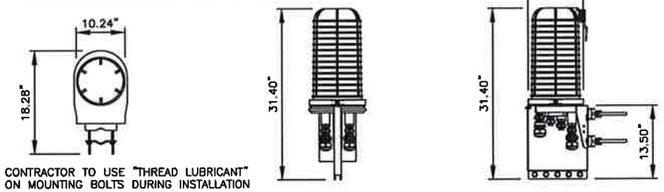

CONTRACTOR TO USE "THREAD LUBRICANT" ON MOUNTING BOLTS DURING INSTALLATION

DC SURGE SUPPRESSOR DETAIL | NO SCALE | A

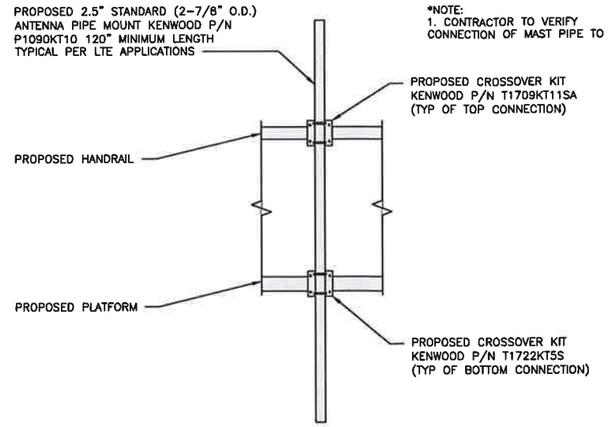

*NOTE:
1. CONTRACTOR TO VERIFY CONNECTION OF MAST PIPE TO FRAME.

MAST PIPE CONNECTION DETAIL | NO SCALE | B

AIRSCALE RRH 4T4R B5 160W AHCA

DIMENSIONS, HxWxD:	13.3"x11.6"x6.5"
UNIT WEIGHT:	36.8 lbs

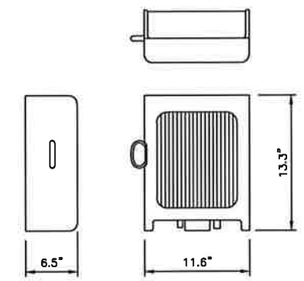

RRH SPECIFICATIONS | NO SCALE | C

AIRSCALE RRH 4T4R B30 100W AHNA

DIMENSIONS, HxWxD:	13.74"x12.48"x6.3" (349x317x160mm)
WEIGHT:	85.9 lbs (39.02kg)

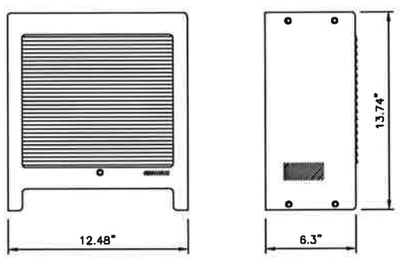

RRH SPECIFICATIONS | NO SCALE | D

NOT USED | NO SCALE | E

NOT USED | NO SCALE | F

NOT USED | NO SCALE | G

NOT USED | NO SCALE | H

NOT USED | NO SCALE | J

APPLICANT/OWNER:

AT&T MOBILITY

16025 NORTHLAND DR
SOUTHFIELD, MI 48075

PREPARED BY:

BLACK & VEATCH

6800 W. 115TH ST, SUITE 2292
OVERLAND PARK, KANSAS 66211
(913) 458-2000

PROJECT NUMBER: 129391

STATE OF MICHIGAN
JOSHUA R. TURNER
No. 6201310514
LICENSED PROFESSIONAL ENGINEER
05/17/2022

IT IS A VIOLATION OF LAW FOR ANY PERSON, UNLESS THEY ARE ACTING UNDER THE DIRECTION OF A LICENSED PROFESSIONAL ENGINEER, TO ALTER THIS DOCUMENT.

LANDLORD/PROPERTY OWNER SIGNATURE

REV	DATE	DESCRIPTION
0	05.17.22	ISSUED FOR CONSTRUCTION

PROJECT LOCATION: USID (305880)

MI4740

40451 12 MILE ROAD
NOVI, MI 48377

DRAWING DESCRIPTION:

EQUIPMENT DETAILS

DRAWING NUMBER:

T-5

PART 1 – GENERAL

1.1 SCOPE:

A. PROVIDE FABRICATION AND ERECTION OF STRUCTURAL STEEL AND OTHER ITEMS AS SHOWN ON THE DRAWINGS OR REQUIRED BY OTHER SECTIONS OF THESE SPECIFICATIONS.

1.2 REFERENCES:

A. AMERICAN INSTITUTE OF STEEL CONSTRUCTION (AISC). MANUAL OF STEEL CONSTRUCTION (13TH EDITION), ALLOWABLE STRESS DESIGN (ASD).

B. AMERICAN SOCIETY FOR TESTING AND MATERIALS (ASTM).
ASTM A36: STRUCTURAL STEEL
ASTM A53: PIPE, STEEL BLACK AND HOT DIPPED, ZINC-COATED WELDED AND SEAMLESS.
ASTM A108: STEEL BARS, CARBON, COLD FINISHED, STANDARD QUALITY.
ASTM A123: ZINC (HOT-DIPPED GALVANIZED) COATING ON IRON AND STEEL PRODUCTS.
ASTM A307: CARBON STEEL BOLTS AND STUDS, 60,000 PSI TENSILE STRENGTH.
ASTM A325: HIGH-STRENGTH BOLT FOR STRUCTURAL STEEL JOINTS.
ASTM A490: HEAT-TREATED, STRUCTURAL STEEL BOLTS, 150 (KSI) (1035MPA) TENSILE STRENGTH.
ASTM A500: COLD-FORMED WELDED AND SEAMLESS CARBON STEEL STRUCTURAL TUBING IN ROUNDS AND SHAPES.
ASTM A563: ARCBON AND ALLOY STEEL NUTS.
ASTM B695: COATINGS OF ZINC MECHANICALLY DEPOSITED ON IRON AND STEEL.
ASTM F436: HARDENED STEEL WASHERS.
ASTM F959: COMPRESSIBLE-WASHER-TYPE DIRECT TENSION INDICATOR FOR USE WITH STRUCTURAL FASTENERS.

C. AMERICAN WELDING SOCIETY (AWS):
AWS A5.1: COVERED CARBON STEEL ARC WELDING ELECTRODES.
AWS A5.5: LOW ALLOY STEEL COVERED ARC WELDING ELECTRODES.
AWS D1.1: STRUCTURAL WELDING CODE – STEEL.

D. RESEARCH COUNCIL ON STRUCTURAL CONNECTIONS (RCSC): "SPECIFICATIONS FOR STRUCTURAL JOINTS USING ASTM A325 BOLTS OR ASTM A490 BOLTS" AS ENDORSED BY AISC.

E. STEEL STRUCTURES PAINTING COUNCIL (SSPC):
SSPC-SP3: POWER TOOL CLEANING.
SSPC-PAINT 11: RED IRON OXIDE, ZINC CHROME, RAW LINSEED OIL OR ALKYD PAINT.

1.3 SUBMITTALS:

A. SUBMIT THE FOLLOWING FOR APPROVAL:

1. FABRICATION AND ERECTION DRAWINGS SHOWING ALL DETAILS, CONNECTIONS, MATERIAL DESIGNATIONS, AND ALL TOP STEEL ELEVATIONS.

B. WELDERS SHALL BE QUALIFIED AS PRESCRIBED IN AWS D1.1.

PART 2 – PRODUCTS

2.1 STRUCTURAL STEEL:

A. SHAPES, PLATES AND BARS SHALL CONFORM TO ASTM A36 AND ASTM A992.

B. STRUCTURAL TUBING SHALL CONFORM TO ASTM A500, GRADE B. STEEL PIPE SHALL CONFORM TO ASTM A53, TYPE E OR S, GRADE B.

2.2 ANCHOR BOLTS:

A. ANCHOR BOLTS SHALL CONFORM TO ASTM A307 WITH HEAVY HEXAGONAL NUTS.

2.3 BOLTS:

A. COMMON (MACHINE) BOLTS SHALL CONFORM TO ASTM A307 GRADE A AND NUTS TO ASTM A563. ONE COMMON BOLT ASSEMBLY SHALL CONSIST OF A BOLT, A HEAVY HEX NUT, AND A HARDENED WASHER.

B. HIGH STRENGTH BOLT SHALL CONFORM TO ASTM A325, ONE HIGH STRENGTH BOLT ASSEMBLY SHALL CONSIST OF A HEAVY HEX STRUCTURAL BOLT, A HEAVY HEX NUT, A HARDENED WASHER CONFIRMING WITH ASTM F436 AND A DIRECT TENSION INDICATOR CONFORMING WITH STM F959. THE HARDENED WASHER SHALL BE INSTALLED AGAINST THE ELEMENT TURNED IN TIGHTENING.UNLESS NOTED OTHERWISE ON THE DRAWINGS, ALL CONNECTIONS SHALL BE BEARING TYPE CONNECTIONS.

2.4 WELDING ELECTRODES:

A. WELDING ELECTRODES SHALL COMPLY WITH AWS D1.1 USING A5.1 OR A5.5 E70XX AND SHALL BE COMPATIBLE WITH THE WELDING PROCESS SELECTED.

2.5 PRIMER:

A. PRIMER SHALL BE RED OXIDE-CHROMATE PRIMER COMPLYING WITH SSPC PAINT SPECIFICATION NO. 11.

PART 3 – EXECUTION

3.1 FABRICATION:

A. SHOP FABRICATE AND ASSEMBLY MATERIALS AS SPECIFIED HEREIN.

1. FABRICATE ITEMS OF STRUCTURAL STEEL IN ACCORDANCE WITH THE AISC-ASD SPECIFICATION, AND AS INDICATED ON THE APPROVED SHOP DRAWINGS.

2. ALL EXPOSED STRUCTURAL STEEL SHALL BE HOT DIP GALVANIZED PER ASTM.

3. PROPERLY MARK AND MATCH-MARK MATERIALS FOR FIELD ASSEMBLY AND FOR IDENTIFICATION AS TO LOCATION FOR WHICH INTENDED.

4. FABRICATE AND DELIVER IN A SEQUENCE WHICH WILL EXPEDITE ERECTION AND MINIMIZE FIELD HANDLING OF MATERIALS.

5. WHERE FINISHING IS REQUIRED, COMPLETE THE ASSEMBLY, INCLUDING THE WELDING OF UNITS, BEFORE START OF FINISHING OPERATIONS.

6. PROVIDE FINISH SURFACE OF MEMBERS EXPOSED IN THE FINAL STRUCTURE FREE FROM MARKINGS, BURNS, AND OTHER DEFECTS.

B. PROVIDE CONNECTIONS AS SPECIFIED HEREIN:

1. PROVIDE BOLTS AND WASHERS OF TYPES AND SIZE REQUIRED FOR COMPLETION OF FIELD ERECTION. USE 3/4 INCH DIAMETER A325 BOLTS UNLESS NOTED OTHERWISE.

2. INSTALL HIGH STRENGTH THREADED FASTENERS IN ACCORDANCE WITH RCSC "SPECIFICATION FOR STRUCTURAL JOINTS USING ASTM A325 OR ASTM A490 BOLTS."

3. WELDED CONSTRUCTION SHALL COMPLY WITH AWS D1.1 FOR PROCEDURES, APPEARANCE, QUALITY OF WELD, AND METHODS USED IN CORRECTING WELDED WORK.

4. THE FABRICATOR SHALL FURNISH AND INSTALL ERECTION CLIPS FOR FIT-UP OF WELDED CONNECTIONS.

5. DOUBLE ANGLE MEMBERS SHALL HAVE WELDED FILLERS SPACED IN ACCORDANCE WITH CHAPTER E4 OF THE AISC-ASD SPECIFICATION.

6. GUSSET AND STIFFENER PLATES SHALL BE 3/8 INCH THICK MINIMUM.

3.2 PRIMING:

A. STRUCTURAL STEEL SHALL BE PRIMED AS SPECIFIED HEREIN, UNLESS SHOWN OTHERWISE ON THE DRAWINGS.

B. STRUCTURAL STEEL SURFACE PREPARATION SHALL CONFORM TO SSPC-SP3, "POWER TOOL CLEANING."

C. SURFACE PREPARATION AND PRIMER SHALL BE IN ACCORDANCE WITH AISC CODE OF STANDARD PRACTICE AS INCLUDED IN THE ASD MANUAL OF STEEL CONSTRUCTION.

D. MATERIALS SHALL REMAIN CLOSED UNTIL REQUIRED FOR USE, MANUFACTURER'S POT-LIFE REQUIREMENTS SHALL BE STRICTLY ADHERED TO.

E. PRIMER SHALL BE APPLIED TO DRY, CLEAN, PREPARED SURFACE AND UNDER FAVORABLE CONDITIONS IN ACCORDANCE WITH MANUFACTURER'S INSTRUCTIONS. UNLESS OTHERWISE RECOMMENDED BY THE MANUFACTURER PRIMING SHALL NOT BE DONE WHEN AMBIENT TEMPERATURE IS LESS THAN 50 DEGREE F, THE RELATIVE HUMIDITY IS MORE THAN 90 PERCENT, OR THE SURFACE TEMPERATURE IS LESS THAN 5 DEGREE F ABOVE THE DEW POINT.

F. GENERALLY ALL PRIMER SHALL BE SPRAY APPLIED. BRUSH OR ROLLER APPLICATION SHALL BE RESTRICTED TO TOUCHUP AND TO AREAS NOT ACCESSIBLE BY SPRAY GUN.

G. PRIMER SHALL BE UNIFORMLY APPLIED WITHOUT RUNS, SAGS, SOLVENT BLISTERS, DRY SPRAY OR OTHER BLEMISHES. ALL BLEMISHES AND OTHER IRREGULARITIES SHALL BE REPAIRED OR REMOVED AND THE AREA RE-COATED. SPECIAL ATTENTION SHALL BE PAID TO CREVICES, WELD LINES, BOLT HEADS, CORNERS, EDGES, ETC., TO OBTAIN THE REQUIRED NOMINAL FILM THICKNESS.

H. THE DRY FILM THICKNESS OF THE PRIMER SHALL BE 2.0 MILS.

I. IF THE PRIMER IS DAMAGED BY WELDING OR PHYSICAL ABUSE, THE AREA SHALL BE TOUCHED-UP AND REPAIRED. THE TOUCHUP PAINT SHALL BE COMPATIBLE WITH THE APPLIED PRIMER WITH MINIMUM DRY FILM THICKNESS OF 1.5 MILS.

3.3 INSTALLATION:

A. INSTALLATION OF STRUCTURAL STEEL SHALL COMPLY WITH AISC "CODE OF STANDARD PRACTICE."

B. STRUCTURAL FIELD WELDING SHALL BE DONE BY THE ELECTRIC SUBMERGED OR SHIELDED METAL ARC PROCESS. WELDED CONSTRUCTION SHALL COMPLY WITH AWS D1.1.

C. PROVIDE ANCHOR BOLTS AND OTHER CONNECTORS REQUIRED FOR SECURING STRUCTURAL STEEL TO ELEVATOR SHAFT WALLS AND OTHER IN-PLACE WORK. PROVIDE TEMPLATES AND OTHER DEVICES NECESSARY FOR PRESETTING BOLTS AND ANCHORS TO ACCURATE LOCATIONS.

D. SPLICE MEMBERS ONLY WHERE INDICATED ON THE DRAWINGS.

E. ANY GAS CUTTING TORCHES HAVE TO BE APPROVED IN WRITING BY THE PROJECT STRUCTURAL ENGINEER.

F. PROVIDE TEMPORARY SHORING BRACING WITH CONNECTIONS OF SUFFICIENT STRENGTH TO BEAR IMPOSED LOADS. REMOVE TEMPORARY CONNECTIONS AND MEMBERS WHEN PERMANENT MEMBERS ARE IN PLACE AND THE FINAL CONNECTIONS HAVE BEEN MADE.

G. ALIGN AND ADJUST MEMBERS, AND OTHER SURFACES WHICH WILL BE IN PERMANENT CONTACT, BEFORE ASSEMBLY.

H. HIGH-STRENGTH BOLTS, AT A MINIMUM, SHALL BE TIGHTENED TO A "SNUG TIGHT" CONDITION AS DEFINED IN THE LATEST AISC SPECIFICATION. ALL HIGH-STRENGTH BOLTS SPECIFIED ON THE DESIGN DRAWINGS TO BE USED IN PRETENSIONED OR SLIP-CRITICAL JOINTS SHALL BE TIGHTENED TO A BOLT TENSION NOT LESS THAN THAT GIVEN IN AISC TABLE J3.1. INSTALLATION SHALL BE BY ANY OF THE FOLLOWING METHODS: TURN-OF NUT METHOD, A DIRECT-TENSION-INDICATOR, TWIST-OFF-TYPE TENSION-CONTROL BOLT, CALIBRATED WRENCH, OR ALTERNATIVE DESIGN BOLT.

APPLICANT/OWNER:

AT&T MOBILITY

16025 NORTHLAND DR
SOUTHFIELD, MI 48075

PREPARED BY:

BLACK & VEATCH

6800 W. 115TH ST, SUITE 2292
OVERLAND PARK, KANSAS 66211
(913) 458-2000

PROJECT NUMBER: 129391

STATE OF MICHIGAN
JOSHUA R. TURNER
No. 6201310514
LICENSED PROFESSIONAL ENGINEER
05/17/2022

IT IS A VIOLATION OF LAW FOR ANY PERSON, UNLESS THEY ARE ACTING UNDER THE DIRECTION OF A LICENSED PROFESSIONAL ENGINEER, TO ALTER THIS DOCUMENT.

LANDLORD/PROPERTY OWNER SIGNATURE

REV	DATE	DESCRIPTION
0	05.17.22	ISSUED FOR CONSTRUCTION

PROJECT LOCATION: USID (305880)

MI4740

40451 12 MILE ROAD
NOVI, MI 48377

DRAWING DESCRIPTION:

STRUCTURAL NOTES

DRAWING NUMBER:

T-6

ANTENNA MOUNTING

1. DESIGN AND CONSTRUCTION OF ANTENNA SUPPORTS SHALL CONFORM TO CURRENT ANSI/TIA-222 OR APPLICABLE LOCAL CODES.

2. ALL STEEL MATERIALS SHALL BE GALVANIZED AFTER FABRICATION IN ACCORDANCE WITH ASTM A123 "ZINC (HOT-DIP GALVANIZED) COATINGS ON IRON AND STEEL PRODUCTS", UNLESS NOTED OTHERWISE.

3. ALL BOLTS, ANCHORS AND MISCELLANEOUS HARDWARE SHALL BE GALVANIZED IN ACCORDANCE WITH ASTM A153 "ZINC-COATING (HOT-DIP) ON IRON AND STEEL HARDWARE", UNLESS NOTED OTHERWISE.

4. DAMAGED GALVANIZED SURFACES SHALL BE REPAIRED BY COLD GALVANIZING IN ACCORDANCE WITH ASTM A780.

5. ALL ANTENNA MOUNTS SHALL BE INSTALLED WITH LOCK NUTS, LOCK WASHERS, OR DOUBLE NUTS AND SHALL BE TORQUED TO MANUFACTURER'S RECOMMENDATIONS.

6. CONTRACTOR SHALL INSTALL ANTENNA PER MANUFACTURER'S RECOMMENDATION FOR INSTALLATION AND GROUNDINAG.

7. ALL UNUSED PORTS ON ANY ANTENNAS SHALL BE TERMINATED WITH A 50-OHM LOAD TO ENSURE ANTENNAS PERFORM AS DESIGNED.

8. PRIOR TO SETTING ANTENNA AZIMUTHS AND DOWNTILTS, ANTENNA CONTRACTOR SHALL CHECK THE ANTENNA MOUNT FOR TIGHTNESS AND ENSURE THAT THEY ARE PLUMB. ANTENNA AZIMUTHS SHALL BE SET FROM TRUE NORTH AND BE ORIENTED WITHIN +/- 5% AS DEFINED BY THE RFDS. ANTENNA DOWNTILTS SHALL BE WITHIN +/- 0.5% AS DEFINED BY THE RFDS. REFER TO ND-00246.

9. JUMPERS FROM THE TMA'S MUST TERMINATE TO OPPOSITE POLARIZATIONS IN EACH SECTOR.

10. CONTRACTOR SHALL RECORD THE SERIAL #, SECTOR, AND POSITION OF EACH ACTUATOR INSTALLED AT THE ANTENNAS AND PROVIDE THE INFORMATION TO AT&T.

11. TMA'S SHALL BE MOUNTED ON PIPE DIRECTLY BEHIND ANTENNAS AS CLOSE TO ANTENNA AS FEASIBLE IN A VERTICAL POSITION.

TORQUE REQUIREMENTS

12. ALL RF CONNECTIONS SHALL BE TIGHTENED BY A TORQUE WRENCH.

13. ALL 8M ANTENNA HARDWARE SHALL BE TIGHTENED TO 9 LB-FT (12 NM).

14. ALL 12M ANTENNA HARDWARE SHALL BE TIGHTENED TO 43 LB-FT (58 NM).

15. ALL GROUNDING HARDWARE SHALL BE TIGHTENED UNTIL THE LOCK WASHER COLLAPSES AND THE GROUNDING HARDWARE IS NO LONGER LOOSE.

16. ALL DIN TYPE CONNECTIONS SHALL BE TIGHTENED TO 18-22 LB-FT (24.4 – 29.8 NM).

17. ALL N TYPE CONNECTIONS SHALL BE TIGHTENED TO 15-20 LB-IN (1.7 – 2.3 NM).

FIBER & POWER CABLE MOUNTING

18. THE FIBER OPTIC TRUNK CABLES SHALL BE INSTALLED INTO CONDUITS, CHANNEL CABLE TRAYS, OR CABLE TRAY. WHEN INSTALLING FIBER OPTIC TRUNK CABLES INTO A CABLE TRAY SYSTEM, THEY SHALL BE INSTALLED INTO AN INTER DUCT AND A PARTITION BARRIER SHALL BE INSTALLED BETWEEN THE 600 VOLT CABLES AND THE INTER DUCT IN ORDER TO SEGREGATE CABLE TYPES. OPTIC FIBER TRUNK CABLES SHALL HAVE APPROVED CABLE RESTRAINTS EVERY (60) SIXTY FEET AND SECURELY FASTENED TO THE CABLE TRAY SYSTEM. NFPA 70 (NEC) ARTICLE 770 RULES SHALL APPLY.

19. THE TYPE TC-ER CABLES SHALL BE INSTALLED INTO CONDUITS, CHANNEL CABLE TRAYS, OR CABLE TRAY AND SHALL BE SECURED AT INTERVALS NOT EXCEEDING (6) SIX FEET. AN EXCEPTION; WHERE TYPE TC-ER CABLES ARE NOT SUBJECT TO PHYSICAL DAMAGE, CABLES SHALL BE PERMITTED TO MAKE A TRANSITION BETWEEN CONDUITS, CHANNEL CABLE TRAYS, OR CABLE TRAY WHICH ARE SERVING UTILIZATION EQUIPMENT OR DEVICES, A DISTANCE (6) SIX FEET SHALL NOT BE EXCEEDED WITHOUT CONTINUOUS SUPPORTING. NFPA 70 (NEC) ARTICLES 336 AND 392 RULES SHALL APPLY.

20. WHEN INSTALLING OPTIC FIBER TRUNK CABLES OR TYPE TC-ER CABLES INTO CONDUITS, NFPA 70 (NEC) ARTICLE 300 RULES SHALL APPLY.

COAXIAL CABLE NOTES

21. TYPES AND SIZES OF THE ANTENNA CABLE ARE BASED ON ESTIMATED LENGTHS. PRIOR TO ORDERING CABLE, CONTRACTOR SHALL VERIFY ACTUAL LENGTH BASED ON CONSTRUCTION LAYOUT AND NOTIFY THE PROJECT MANAGER IF ACTUAL LENGTHS EXCEED ESTIMATED LENGTHS.

22. CONTRACTOR SHALL VERIFY THE DOWN-TILT OF EACH ANTENNA WITH A DIGITAL LEVEL.

23. CONTRACTOR SHALL CONFIRM COAX COLOR CODING PRIOR TO CONSTRUCTION. REFER TO "ANTENNA SYSTEM LABELING STANDARD" ND-00027 LATEST VERSION.

24. ALL JUMPERS TO THE ANTENNAS FROM THE MAIN TRANSMISSION LINE SHALL BE 1/2" DIA. LDF AND SHALL NOT EXCEED 6'-0".

25. ALL COAXIAL CABLE SHALL BE SECURED TO THE DESIGNED SUPPORT STRUCTURE, IN AN APPROVED MANNER, AT DISTANCES NOT TO EXCEED 4'-0" OC.

26. CONTRACTOR SHALL FOLLOW ALL MANUFACTURER'S RECOMMENDATIONS REGARDING BOTH THE INSTALLATION AND GROUNDING OF ALL COAXIAL CABLES, CONNECTORS, ANTENNAS, AND ALL OTHER EQUIPMENT.

27. CONTRACTOR SHALL WEATHERPROOF ALL ANTENNA CONNECTORS WITH SELF AMALGAMATING TAPE. WEATHERPROOFING SHALL BE COMPLETED IN STRICT ACCORDANCE WITH AT&T STANDARDS.

28. CONTRACTOR SHALL GROUND ALL EQUIPMENT. INCLUDING ANTENNAS, RET MOTORS, TMA'S, COAX CABLES, AND RET CONTROL CABLES AS A COMPLETE SYSTEM. GROUNDING SHALL BE EXECUTED BY QUALIFIED WIREMEN IN COMPLIANCE WITH MANUFACTURER'S SPECIFICATION AND RECOMMENDATION.

29. CONTRACTOR SHALL PROVIDE STRAIN-RELIEF AND CABLE SUPPORTS FOR ALL CABLE ASSEMBLIES, COAX CABLES, AND RET CONTROL CABLES. CABLE STRAIN-RELIEFS AND CABLE SUPPORTS SHALL BE APPROVED FOR THE PURPOSE. INSTALLATION SHALL BE IN ACCORDANCE WITH MANUFACTURER'S SPECIFICATIONS AND RECOMMENDATIONS.

30. CONTRACTOR TO VERIFY THAT EXISTING COAX HANGERS ARE STACKABLE SNAP IN HANGERS. IF EXISTING HANGERS ARE NOT STACKABLE SNAP IN HANGERS THE CONTRACTOR SHALL REPLACE EXISTING HANGERS WITH NEW SNAP IN HANGERS IF APPLICABLE.

GENERAL CABLE AND EQUIPMENT NOTES

31. CONTRACTOR SHALL BE RESPONSIBLE TO VERIFY ANTENNA, TMAS, DIPLEXERS, AND COAX CONFIGURATION, MAKE AND MODELS PRIOR TO INSTALLATION.

32. ALL CONNECTIONS FOR HANGERS, SUPPORTS, BRACING, ETC. SHALL BE INSTALLED PER TOWER.

MANUFACTURER'S RECOMMENDATIONS

33. CONTRACTOR SHALL REFERENCE THE TOWER STRUCTURAL ANALYSIS/DESIGN DRAWINGS FOR DIRECTIONS ON CABLE DISTRIBUTION/ROUTING.

34. ALL OUTDOOR RF CONNECTORS/CONNECTIONS SHALL BE WEATHERPROOFED, EXCEPT THE RET CONNECTORS, USING BUTYL TAPE AFTER INSTALLATION AND FINAL CONNECTIONS ARE MADE. BUTYL TAPE SHALL HAVE A MINIMUM OF ONE-HALF TAPE WIDTH OVERLAP ON EACH TURN AND EACH LAYER SHALL BE WRAPPED THREE TIMES. WEATHERPROOFING SHALL BE SMOOTH WITHOUT BUCKLING. BUTYL BLEEDING IS NOT ALLOWED.

35. IF REQUIRED TO PAINT ANTENNAS AND/OR COAX:
   A. TEMPERATURE SHALL BE ABOVE 50° F.
   B. PAINT COLOR MUST BE APPROVED BY BUILDING OWNER/LANDLORD.
   C. FOR REGULATED TOWERS, FAA/FCC APPROVED PAINT IS REQUIRED.
   D. DO NOT PAINT OVER COLOR CODING OR ON EQUIPMENT MODEL NUMBERS.

36. ALL CABLES SHALL BE GROUNDED WITH COAXIAL CABLE GROUND KITS. FOLLOW THE MANUFACTURER'S RECOMMENDATIONS.
   A. GROUNDING AT THE ANTENNA LEVEL.
   B. GROUNDING AT MID LEVEL, TOWERS WHICH ARE OVER 200'-0", ADDITIONAL CABLE GROUNDING REQUIRED.
   C. GROUNDING AT BASE OF TOWER PRIOR TO TURNING HORIZONTAL.
   D. GROUNDING OUTSIDE THE EQUIPMENT SHELTER AT ENTRY PORT.
   E. GROUNDING INSIDE THE EQUIPMENT SHELTER AT THE ENTRY PORT.

37. ALL PROPOSED GROUND BAR DOWNLEADS ARE TO BE TERMINATED TO THE EXISTING ADJACENT GROUND

38. BAR DOWNLEADS A MINIMUM DISTANCE OF 4'-0" BELOW GROUND BAR. TERMINATIONS MAY BE EXOTHERMIC OR COMPRESSION.

39. THE CONTRACTOR SHALL BE RESPONSIBLE FOR VERIFYING THE ANTENNA AND THE COAX CONFIGURATION IS THE CORRECT MAKE AND MODELS, PRIOR TO INSTALLATION.

40. ALL CONNECTIONS FOR HANGERS, SUPPORTS, BRACING, ETC. SHALL BE INSTALLED PER TOWER MANUFACTURER'S SPECIFICATION & RECOMMENDATIONS.

GROUNDING NOTES

41. GROUNDING IS SHOWN DIAGRAMMATICALLY ONLY.

42. CONTRACTOR SHALL GROUND ALL EQUIPMENT AS A COMPLETE SYSTEM. GROUNDING SHALL BE IN COMPLIANCE WITH NEC SECTION 250 AND AT&T GROUNDING AND BONDING REQUIREMENTS (ATT-TP-76416) AND MANUFACTURER'S SPECIFICATIONS.

43. ALL GROUND CONDUCTORS SHALL BE COPPER; NO ALUMINUM CONDUCTORS SHALL BE USED.

44. ALL CABLES SHALL BE GROUNDED WITH COAXIAL CABLE GROUNDING KITS. FOLLOW THE MANUFACTURER'S RECOMMENDATIONS.
   A. GROUNDING AT THE ANTENNA LEVEL.
   B. GROUNDING AT MID LEVEL, TOWERS WHICH ARE OVER 200', ADDITIONAL CABLE GROUNDING REQUIRED.
   C. GROUNDING AT BASE OF TOWER PRIOR TO TURNING HORIZONTAL.
   D. GROUNDING OUTSIDE THE EQUIPMENT SHELTER AT ENTRY PORT.
   E. GROUNDING INSIDE THE EQUIPMENT SHELTER AT THE ENTRY PORT.

45. ALL PROPOSED GROUNDING BAR DOWNLEADS ARE TO BE TERMINATED TO THE EXISTING ADJACENT GROUNDING BAR DOWNLEADS A MINIMUM DISTANCE OF 4'-0" BELOW GROUNDING BAR. TERMINATIONS MAY BE EXOTHERMIC OR COMPRESSION.

APPLICANT/OWNER:

AT&T MOBILITY

16025 NORTHLAND DR
SOUTHFIELD, MI 48075

PREPARED BY:

BLACK & VEATCH

6800 W. 115TH ST, SUITE 2292
OVERLAND PARK, KANSAS 66211
(913) 458-2000

PROJECT NUMBER: 129391

STATE OF MICHIGAN
JOSHUA R. TURNER
No. 6201310514
LICENSED PROFESSIONAL ENGINEER
05/17/2022

IT IS A VIOLATION OF LAW FOR ANY PERSON, UNLESS THEY ARE ACTING UNDER THE DIRECTION OF A LICENSED PROFESSIONAL ENGINEER, TO ALTER THIS DOCUMENT.

LANDLORD/PROPERTY OWNER SIGNATURE

REV	DATE	DESCRIPTION
0	05.17.22	ISSUED FOR CONSTRUCTION

PROJECT LOCATION: USID (305880)

MI4740

40451 12 MILE ROAD
NOVI, MI 48377

DRAWING DESCRIPTION:

EQUIPMENT NOTES

DRAWING NUMBER:

T-7

PART 1 – GENERAL

1.1 GENERAL CONDITIONS:

A. CONTRACTOR SHALL INSPECT THE EXISTING SITE CONDITIONS PRIOR TO SUBMITTING BID. ANY QUESTIONS ARISING DURING THE BID PERIOD IN REGARDS TO THE CONTRACTORS FUNCTIONS, THE SCOPE OF WORK, OR ANY OTHER ISSUE RELATED TO THIS PROJECT SHALL BE BROUGHT UP DURING THE BID PERIOD WITH THE PROJECT MANAGER FOR CLARIFICATION, NOT AFTER THE CONTRACT HAS BEEN AWARDED.

B. THE CONTRACTOR SHALL OBTAIN PERMITS, LICENSES, MAKE ALL DEPOSITS, AND PAY ALL FEES REQUIRED FOR THE CONSTRUCTION PERFORMANCE FOR THE WORK UNDER THIS SECTION.

C. DRAWINGS SHOW THE GENERAL ARRANGEMENT OF ALL SYSTEMS AND COMPONENTS COVERED UNDER THIS SECTION. THE CONTRACTOR SHALL VERIFY ALL DIMENSIONS. DRAWING SHALL NOT BE SCALED TO DETERMINE DIMENSIONS.

1.2 LAWS, REGULATIONS, ORDINANCES, STATUTES AND CODES.

A. ALL WORK SHALL BE INSTALLED IN ACCORDANCE WITH THE LATEST EDITION OF THE NATIONAL ELECTRICAL CODE, AND ALL APPLICABLE LOCAL LAWS, REGULATIONS, ORDINANCES, STATUTES AND CODES. CONDUIT BENDS SHALL BE THE RADIUS BEND FOR THE TRADE SIZE OF CONDUIT IN COMPLIANCE WITH THE LATEST EDITIONS OF NEC.

1.3 REFERENCES:

A. THE PUBLICATIONS LISTED BELOW ARE PART OF THIS SPECIFICATION. EACH PUBLICATION SHALL BE THE LATEST REVISION AND ADDENDUM IN EFFECT ON THE DATE. THIS SPECIFICATION IS ISSUED FOR CONSTRUCTION UNLESS OTHERWISE NOTED. EXCEPT AS MODIFIED BY THE REQUIREMENT SPECIFIED HEREIN OR THE DETAILS OF THE DRAWINGS, WORK INCLUDED IN THIS SPECIFICATION SHALL CONFORM TO THE APPLICABLE PROVISION OF THESE PUBLICATIONS.

1. ANSI/IEEE (AMERICAN NATIONAL STANDARDS INSTITUTE)
2. ASTM (AMERICAN SOCIETY FOR TESTING AND MATERIALS)
3. ICEA (INSULATED CABLE ENGINEERS ASSOCIATION)
4. NEMA (NATIONAL ELECTRICAL MANUFACTURER'S ASSOCIATION)
5. NFPA (NATIONAL FIRE PROTECTION ASSOCIATION)
6. OSHA (OCCUPATIONAL SAFETY AND HEALTH ADMINISTRATION)
7. UL (UNDERWRITERS LABORATORIES INC.)
8. AT&T GROUNDING AND BONDING STANDARDS TP-76416

1.4 SCOPE OF WORK

A. WORK UNDER THIS SECTION SHALL CONSIST OF FURNISHING ALL LABOR, MATERIAL, AND ASSOCIATED SERVICES REQUIRED TO COMPLETE REQUIRED CONSTRUCTION AND BE OPERATIONAL.

B. ALL ELECTRICAL EQUIPMENT UNDER THIS CONTRACT SHALL BE PROPERLY TESTED, ADJUSTED, AND ALIGNED BY THE CONTRACTOR.

C. THE CONTRACTOR SHALL BE RESPONSIBLE FOR ALL EXCAVATING, DRAINING, TRENCHES, BACKFILLING, AND REMOVAL OF EXCESS DIRT.

D. THE CONTRACTOR SHALL FURNISH TO THE OWNER WITH CERTIFICATES OF A FINAL INSPECTION AND APPROVAL FROM THE INSPECTION AUTHORITIES HAVING JURISDICTION.

E. THE CONTRACTOR SHALL PREPARE A COMPLETE SET OF AS-BUILT DRAWINGS, DOCUMENT ALL WIRING EQUIPMENT CONDITIONS, AND CHANGES WHILE COMPLETING THIS CONTRACT. THE AS-BUILT DRAWINGS SHALL BE SUBMITTED AT COMPLETION OF THE PROJECT.

PART 2 – PRODUCTS

2.1 GENERAL:

A. ALL MATERIALS AND EQUIPMENT SHALL BE UL LISTED, NEW, AND FREE FROM DEFECTS.

B. ALL ITEMS OF MATERIALS AND EQUIPMENT SHALL BE ACCEPTABLE TO THE AUTHORITY HAVING JURISDICTION AS SUITABLE FOR THE USE INTENDED.

C. ALL EQUIPMENT SHALL BEAR THE UNDERWRITERS LABORATORIES LABEL OF APPROVAL, AND SHALL CONFORM TO REQUIREMENT OF THE NATIONAL ELECTRICAL CODE.

D. ALL OVERCURRENT DEVICES SHALL HAVE AN INTERRUPTING CURRENT RATING THAT SHALL BE GREATER THAN THE SHORT CIRCUIT CURRENT TO WHICH THEY ARE SUBJECTED, 10,000 AIC MINIMUM. VERIFY AVAILABLE SHORT CIRCUIT CURRENT DOES NOT EXCEED THE RATING OF ELECTRICAL EQUIPMENT IN ACCORDANCE WITH ARTICLE 110.24 NEC OR THE MOST CURRENT ADOPTED CODE PER THE GOVERNING JURISDICTION.

2.2 MATERIALS AND EQUIPMENT:

A. CONDUIT:

1. RIGID METAL CONDUIT (RMC) SHALL BE HOT-DIPPED GALVANIZED INSIDE AND OUTSIDE INCLUDING ENDS AND THREADS AND ENAMELED OR LACQUERED INSIDE IN ADDITION TO GALVANIZING.

2. LIQUIDTIGHT FLEXIBLE METAL CONDUIT SHALL BE UL LISTED.

3. CONDUIT CLAMPS, STRAPS AND SUPPORTS SHALL BE STEEL OR MALLEABLE IRON. ALL FITTINGS SHALL BE COMPRESSION AND CONCRETE TIGHT TYPE. GROUNDING BUSHINGS WITH INSULATED THROATS SHALL BE INSTALLED ON ALL CONDUIT TERMINATIONS.

4. NONMETALLIC CONDUIT AND FITTINGS SHALL BE SCHEDULE 40 PVC. INSTALL USING SOLVENT-CEMENT-TYPE JOINTS AS RECOMMENDED BY THE MANUFACTURER.

B. CONDUCTORS AND CABLE:

1. CONDUCTORS AND CABLE SHALL BE FLAME-RETARDANT, MOISTURE AND HEAT RESISTANT THERMOPLASTIC, SINGLE CONDUCTOR, COPPER, TYPE THHN/THWN-2, 600 VOLT, SIZE AS INDICATED, #12 AWG SHALL BE THE MINIMUM SIZE CONDUCTOR USED.

2. #10 AWG AND SMALLER CONDUCTOR SHALL BE SOLID OR STRANDED AND #8 AWG AND LARGER CONDUCTORS SHALL BE STRANDED.

3. SOLDERLESS, COMPRESSION-TYPE CONNECTORS SHALL BE USED FOR TERMINATION OF ALL STRANDED CONDUCTORS.

4. STRAIN-RELIEF SUPPORTS GRIPS SHALL BE HUBBELL KELLEMS OR APPROVED EQUAL. CABLES SHALL BE SUPPORTED IN ACCORDANCE WITH THE NEC AND CABLE MANUFACTURER'S RECOMMENDATIONS.

5. ALL CONDUCTORS SHALL BE TAGGED AT BOTH ENDS OF THE CONDUCTOR, AT ALL PULL BOXES, J-BOXES, EQUIPMENT AND CABINETS AND SHALL BE IDENTIFIED WITH APPROVED PLASTIC TAGS (ACTION CRAFT, BRADY, OR APPROVED EQUAL).

C. DISCONNECT SWITCHES:

1. DISCONNECT SWITCHES SHALL BE HEAVY DUTY, DEAD-FRONT, QUICK-MAKE, QUICK-BREAK, EXTERNALLY OPERABLE, HANDLE LOCKABLE AND INTERLOCK WITH COVER IN CLOSED POSITION, RATING AS INDICATED, UL LABELED FURNISHED IN NEMA 3R ENCLOSURE, SQUARE-D OR ENGINEER APPROVED EQUAL.

D. CHEMICAL ELECTROLYTIC GROUNDING SYSTEM:

1. INSTALL CHEMICAL GROUNDING AS REQUIRED. THE SYSTEM SHALL BE ELECTROLYTIC MAINTENANCE FREE ELECTRODE CONSISTING OF RODS WITH A MINIMUM #2 AWG CU EXOTHERMICALLY WELDED PIGTAIL, PROTECTIVE BOXES, AND BACKFILL MATERIAL. MANUFACTURER SHALL BE LYNCOLE XIT GROUNDING ROD TYPES K2-(*)CS OR K2L-(*)CS (*) LENGTH AS REQUIRED.

2. GROUND ACCESS BOX SHALL BE A POLYPLASTIC BOX FOR NON-TRAFFIC APPLICATIONS, INCLUDING BOLT DOWN FLUSH COVER WITH "BREATHER" HOLES, XIT MODEL #XB-22. ALL DISCONNECT SWITCHES AND CONTROLLING DEVICES SHALL BE PROVIDED WITH ENGRAVED LAMICOID NAMEPLATES INDICATING EQUIPMENT CONTROLLED, BRANCH CIRCUITS ID NUMBERING, AND THE ELECTRICAL POWER SOURCE.

3. BACKFILL MATERIAL SHALL BE LYNCONITE AND LYNCOLE GROUNDING GRAVEL.

E. SYSTEM GROUNDING:

1. ALL GROUNDING COMPONENTS SHALL BE TINNED AND GROUNDING CONDUCTOR SHALL BE #2 AWG BARE, SOLID, TINNED, COPPER. ABOVE GRADE GROUNDING CONDUCTORS SHALL BE INSULATED WHERE NOTED.

2. GROUNDING BUSES SHALL BE BARE, TINNED, ANNEALED COPPER BARS OF RECTANGULAR CROSS SECTION. STANDARD BUS BARS MGB, SHALL BE FURNISHED AND INSTALLED BY THE CONTRACTOR. THEY SHALL NOT BE FABRICATED OR MODIFIED IN THE FIELD. ALL GROUNDING BUSES SHALL BE IDENTIFIED WITH MINIMUM 3/4" LETTERS BY WAY OF STENCILING OR DESIGNATION PLATE.

3. CONNECTORS SHALL BE HIGH-CONDUCTIVITY, HEAVY DUTY, LISTED AND LABELED AS GROUNDING CONNECTORS FOR THE MATERIALS USED. USE TWO-HOLE COMPRESSION LUGS WITH HEAT SHRINK FOR MECHANICAL CONNECTIONS. INTERIOR CONNECTIONS USE TWO-HOLE COMPRESSION LUGS WITH INSPECTION WINDOW AND CLEAR HEAT SHRINK.

4. EXOTHERMIC WELDED CONNECTIONS SHALL BE PROVIDED IN KIT FORM AND SELECTED FOR THE SPECIFIC TYPES, SIZES, AND COMBINATIONS OF CONDUCTORS AND OTHER ITEMS TO BE CONNECTED.

5. GROUND RODS SHALL BE COPPER-CLAD STEEL WITH HIGH-STRENGTH STEEL CORE AND ELECTROLYTIC-GRADE COPPER OUTER SHEATH, MOLTEN WELDED TO CORE, 5/8"x10'-0". ALL GROUNDING RODS SHALL BE INSTALLED WITH INSPECTION SLEEVES.

6. INSTALL AN EQUIPMENT GROUNDING CONDUCTOR IN ALL CONDUITS IN COMPLIANCE WITH THE AT&T SPECIFICATIONS AND NEC. THE EQUIPMENT GROUNDING CONDUCTORS SHALL BE BONDED AT ALL JUNCTION BOXES, PULLBOXES, DISCONNECT SWITCHES, STARTERS, AND EQUIPMENT CABINETS.

F. OTHER MATERIALS:

1. THE CONTRACTOR SHALL PROVIDE OTHER MATERIALS, THOUGH NOT SPECIFICALLY DESCRIBED, WHICH ARE REQUIRED FOR A COMPLETELY OPERATIONAL SYSTEM AND PROPER INSTALLATION OF THE WORK.

2. PROVIDE PULL BOXES AND JUNCTION BOXES WHERE SHOWN OR REQUIRED BY NEC.

G. PANELS AND LOAD CENTERS:

1. ALL PANEL DIRECTORIES SHALL BE TYPEWRITTEN.

PART 3 – EXECUTION

3.1 GENERAL:

A. ALL MATERIAL AND EQUIPMENT SHALL BE INSTALLED IN STRICT ACCORDANCE WITH THE MANUFACTURER'S RECOMMENDATIONS.

B. EQUIPMENT SHALL BE TIGHTLY COVERED AND PROTECTED AGAINST DIRT OR WATER, AND AGAINST CHEMICAL OR MECHANICAL INJURY DURING INSTALLATION AND CONSTRUCTION PERIODS.

3.2 LABOR AND WORKMANSHIP:

A. ALL LABOR FOR THE INSTALLATION OF MATERIALS AND EQUIPMENT FURNISHED FOR THE ELECTRICAL SYSTEM SHALL BE INSTALLED BY EXPERIENCED WIREMEN, IN A NEAT AND WORKMAN-LIKE MANNER.

B. ALL ELECTRICAL EQUIPMENT SHALL BE ADJUSTED, ALIGNED AND TESTED BY THE CONTRACTOR AS REQUIRED TO PRODUCE THE INTENDED PERFORMANCE.

C. UPON COMPLETION OF WORK, THE CONTRACTOR SHALL THOROUGHLY CLEAN ALL EXPOSED EQUIPMENT, REMOVE ALL LABELS AND ANY DEBRIS, CRATING OR CARTONS AND LEAVE THE INSTALLATION FINISHED AND READY FOR OPERATION.

3.3 COORDINATION:

A. THE CONTRACTOR SHALL COORDINATE THE INSTALLATION OF ELECTRICAL ITEMS WITH THE OWNER-FURNISHED EQUIPMENT DELIVERY SCHEDULE TO PREVENT UNNECESSARY DELAYS IN THE TOTAL WORK.

3.4 INSTALLATION:

A. CONDUIT:

1. ALL ELECTRICAL WIRING SHALL BE INSTALLED IN CONDUIT AS SPECIFIED. NO CONDUIT OR TUBING OF LESS THAN 3/4 INCH TRADE SIZE.

2. PROVIDE RIGID PVC SCHEDULE 80 CONDUITS FOR ALL RISERS, RMC OTHERWISE NOTED. EMT MAY BE INSTALLED FOR EXTERIOR CONDUITS WHERE NOT SUBJECT TO PHYSICAL DAMAGE.

3. INSTALL SCHEDULE 40 PVC CONDUIT WITH A MINIMUM COVER OF 24" UNDER ROADWAYS, PARKING LOTS, STREETS, AND ALLEYS. CONDUIT SHALL HAVE A MINIMUM COVER OF 18" IN ALL OTHER NON-TRAFFIC APPLICATIONS (REFER TO LATEST NEC, TABLE 300.5).

4. USE GALVANIZED FLEXIBLE STEEL CONDUIT WHERE DIRECT CONNECTION TO EQUIPMENT WITH MOVEMENT, VIBRATION, OR FOR EASE OF MAINTENANCE. USE LIQUID TIGHT, FLEXIBLE METAL CONDUIT FOR OUTDOOR APPLICATIONS. INSTALL GALVANIZED FLEXIBLE STEEL CONDUIT AT ALL POINTS OF CONNECTION TO EQUIPMENT MOUNTED ON SUPPORT TO ALLOW FOR EXPANSION AND CONTRACTION.

5. A RUN OF CONDUIT BETWEEN BOXES OR EQUIPMENT SHALL NOT CONTAIN MORE THAN THE EQUIVALENT OF THREE QUARTER-BENDS. CONDUIT BEND SHALL BE MADE WITH THE UL LISTED BENDER OR FACTORY 90 DEGREE ELBOWS MAY BE USED.

6. FIELD FABRICATED CONDUITS SHALL BE CUT SQUARE WITH A CONDUIT CUTTING TOOL AND REAMED TO PROVIDE A SMOOTH INSIDE SURFACE.

7. PROVIDE INSULATED GROUNDING BUSHING FOR ALL CONDUITS.

8. CONTRACTOR IS RESPONSIBLE FOR PROTECTING ALL CONDUITS DURING CONSTRUCTION. TEMPORARY OPENINGS IN THE CONDUIT SYSTEM SHALL BE PLUGGED OR CAPPED TO PREVENT ENTRANCE OF MOISTURE OR FOREIGN MATTER. CONTRACTOR SHALL REPLACE ANY CONDUITS CONTAINING FOREIGN MATERIALS THAT CANNOT BE REMOVED.

9. ALL CONDUITS SHALL BE SWABBED CLEAN BY PULLING AN APPROPRIATE SIZE MANDREL THROUGH THE CONDUIT BEFORE INSTALLATION OF CONDUCTORS OR CABLES. CONDUIT SHALL BE FREE OF DIRT AND DEBRIS.

10. INSTALL PULL STRINGS IN ALL CLEAN EMPTY CONDUITS. IDENTIFY PULL STRINGS AT EACH END.

11. INSTALL 2" HIGHLY VISIBLE AND DETECTABLE TAPE 12" ABOVE ALL UNDERGROUND CONDUITS AND CONDUCTORS.

12. CONDUITS SHALL BE INSTALLED IN SUCH A MANNER AS TO ENSURE AGAINST COLLECTION OF TRAPPED CONDENSATION.

13. PROVIDE CORE DRILLING AS NECESSARY FOR PENETRATIONS TO ALLOW FOR RACEWAYS AND CABLES TO BE ROUTED THROUGH THE BUILDING. DO NOT PENETRATE STRUCTURAL MEMBERS. SLEEVES AND/OR PENETRATIONS IN FIRE RATED CONSTRUCTION SHALL BE EFFECTIVELY SEALED WITH FIRE RATED MATERIAL WHICH SHALL MAINTAIN THE FIRE RATING OF THE WALL OR STRUCTURE. FIRE STOPS AT FLOOR PENETRATIONS SHALL PREVENT PASSAGE OF WATER, SMOKE, FIRE, AND FUMES. ALL MATERIAL SHALL BE UL APPROVED FOR THIS PURPOSE.

B. CONDUCTORS AND CABLE:

1. ALL POWER WIRING SHALL BE COLOR CODED AS FOLLOWS:

DESCRIPTION	208/240/120 VOLT SYSTEMS
PHASE A	BLACK
PHASE B	RED
PHASE C	BLUE
NEUTRAL	WHITE
GROUNDING	GREEN

2. SPLICES SHALL BE MADE ONLY AT OUTLETS, JUNCTION BOXES, OR ACCESSIBLE RACEWAY CONDUITS APPROVED FOR THIS PURPOSE.

3. PULLING LUBRICANTS SHALL BE UL APPROVED. CONTRACTOR SHALL USE NYLON OR HEMP ROPE FOR PULLING CONDUCTOR OR CABLES INTO THE CONDUIT.

4. CABLES SHALL BE NEATLY TRAINED, WITHOUT INTERLACING, AND BE OF SUFFICIENT LENGTH IN ALL BOXES & EQUIPMENT TO PERMIT MAKING A NEAT ARRANGEMENT. CABLES SHALL BE SECURED IN A MANNER TO AVOID TENSION ON CONDUCTORS OR TERMINALS. CONDUCTORS SHALL BE PROTECTED FROM MECHANICAL INJURY AND MOISTURE. SHARP BENDS OVER CONDUIT BUSHINGS IS PROHIBITED. DAMAGED CABLES SHALL BE REMOVED AND REPLACED AT THE CONTRACTOR'S EXPENSE.

C. DISCONNECT SWITCHES:

1. INSTALL DISCONNECT SWITCHES LEVEL AND PLUMB. CONNECT TO WIRING SYSTEM AND GROUNDING SYSTEM AS INDICATED.

D. GROUNDING:

1. ALL METALLIC PARTS OF ELECTRICAL EQUIPMENT WHICH DO NOT CARRY CURRENT SHALL BE GROUNDED IN ACCORDANCE WITH THE REQUIREMENTS OF THE BUILDING MANUFACTURER, AT&T GROUNDING AND BONDING STANDARDS TP-76416, ND-00135, AND THE NATIONAL ELECTRICAL CODE.

2. PROVIDE ELECTRICAL GROUNDING AND BONDING SYSTEM INDICATED WITH ASSEMBLY OF MATERIALS, INCLUDING GROUNDING ELECTRODES, BONDING JUMPERS AND ADDITIONAL ACCESSORIES AS REQUIRED FOR A COMPLETE INSTALLATION.

3. ALL GROUNDING CONDUCTORS SHALL PROVIDE A STRAIGHT DOWNWARD PATH TO GROUND WITH GRADUAL BEND AS REQUIRED. GROUNDING CONDUCTORS SHALL NOT BE LOOPED OR SHARPLY BENT. ROUTE GROUNDING CONNECTIONS AND CONDUCTORS TO GROUND IN THE SHORTEST AND STRAIGHTEST PATHS POSSIBLE TO MINIMIZE TRANSIENT VOLTAGE RISES.

4. BUILDINGS AND/OR NEW TOWERS GREATER THAN 75 FEET IN HEIGHT AND WHERE THE MAIN GROUNDING CONDUCTORS ARE REQUIRED TO BE ROUTED TO GRADE, THE CONTRACTOR SHALL ROUTE TWO GROUNDING CONDUCTORS FROM THE ROOFTOP, TOWERS, AND WATER TOWERS GROUNDING RING, TO THE EXISTING GROUNDING SYSTEM. THE GROUNDING CONDUCTORS SHALL NOT BE SMALLER THAN 2/0 AWG COPPER. ROOFTOP GROUNDING RING SHALL BE BONDED TO THE EXISTING GROUNDING SYSTEM, THE BUILDING STEEL COLUMNS, LIGHTNING PROTECTION SYSTEM, AND BUILDING MAIN WATER LINE (FERROUS OR NONFERROUS METAL PIPING ONLY). SEE STANDARD 6.3.2.2.

5. TIGHTEN GROUNDING AND BONDING CONNECTORS, INCLUDING SCREWS AND BOLTS, IN ACCORDANCE WITH MANUFACTURER'S PUBLISHED TORQUE TIGHTENING VALUES FOR CONNECTORS AND BOLTS. WHERE MANUFACTURER'S TORQUING REQUIREMENTS ARE NOT AVAILABLE, TIGHTEN CONNECTIONS TO COMPLY WITH TIGHTENING TORQUE VALUES SPECIFIED IN UL TO ASSURE PERMANENT AND EFFECTIVE GROUNDING.

6. CONTRACTOR SHALL VERIFY THE LOCATIONS OF GROUNDING TIE-IN-POINTS TO THE EXISTING GROUNDING SYSTEM. ALL UNDERGROUND GROUNDING CONNECTIONS SHALL BE MADE BY THE EXOTHERMIC WELD PROCESS AND INSTALLED IN ACCORDANCE WITH THE MANUFACTURER'S INSTRUCTIONS.

7. ALL GROUNDING CONNECTIONS SHALL BE INSPECTED FOR TIGHTNESS. EXOTHERMIC WELDED CONNECTIONS SHALL BE APPROVED BY THE INSPECTOR HAVING JURISDICTION BEFORE BEING PERMANENTLY CONCEALED.

8. APPLY CORROSION-RESISTANT FINISH TO FIELD CONNECTIONS AND PLACES WHERE FACTORY APPLIED PROTECTIVE COATINGS HAVE BEEN DESTROYED. USE KOPR-SHIELD ANTI-OXIDATION COMPOUND ON ALL COMPRESSION GROUNDING CONNECTIONS.

9. A SEPARATE, CONTINUOUS, INSULATED EQUIPMENT GROUNDING CONDUCTOR SHALL BE INSTALLED IN ALL FEEDER AND BRANCH CIRCUITS.

10. BOND ALL INSULATED GROUNDING BUSHINGS WITH A BARE #6 AWG GROUNDING CONDUCTOR TO A GROUND BUS.

11. DIRECT BURIED GROUNDING CONDUCTORS SHALL BE INSTALLED AT A NOMINAL DEPTH OF 36" MINIMUM BELOW GRADE, OR 6" BELOW THE FROST LINE, USE THE GREATER OF THE TWO DISTANCES.

12. ALL GROUNDING CONDUCTORS EMBEDDED IN OR PENETRATING CONCRETE SHALL BE INSTALLED IN SCHEDULE 40 PVC CONDUIT.

13. THE INSTALLATION OF CHEMICAL ELECTROLYTIC GROUNDING SYSTEM SHALL BE IN STRICT ACCORDANCE WITH MANUFACTURER'S INSTRUCTIONS. REMOVE SEALING TAPE FROM LEACHING AND BREATHER HOLES. INSTALL PROTECTIVE BOX FLUSH WITH GRADE.

14. DRIVE GROUND RODS UNTIL TOPS ARE A MINIMUM DISTANCE OF 36" DEPTH OR 6" BELOW FROST LINE, USING THE GREATER OF THE TWO DISTANCES.

15. IF COAX ON THE ICE BRIDGE IS MORE THAN 6 FT. FROM THE GROUNDING BAR AT THE BASE OF THE TOWER, A SECOND GROUNDING BAR WILL BE NEEDED AT THE END OF THE ICE BRIDGE, TO GROUND THE COAX CABLE GROUNDING KITS AND IN-LINE ARRESTORS.

16. CONTRACTOR SHALL REPAIR, AND/OR REPLACE, EXISTING GROUNDING SYSTEM COMPONENTS DAMAGED DURING CONSTRUCTION AT THE CONTRACTOR'S EXPENSE.

3.5 ACCEPTANCE TESTING:

A. CERTIFIED PERSONNEL USING CERTIFIED EQUIPMENT SHALL PERFORM REQUIRED TESTS AND SUBMIT WRITTEN TEST REPORTS UPON COMPLETION.

B. WHEN MATERIAL AND/OR WORKMANSHIP IS FOUND NOT TO COMPLY WITH THE SPECIFIED REQUIREMENTS, THE NON-COMPLYING ITEMS SHALL BE REMOVED FROM THE PROJECT SITE AND REPLACED WITH ITEMS COMPLYING WITH THE SPECIFIED REQUIREMENTS PROMPTLY AFTER RECEIPT OF NOTICE FOR NON-COMPLIANCE.

C. TEST PROCEDURES:

1. ALL FEEDERS SHALL HAVE INSULATION TESTED AFTER INSTALLATION, BEFORE CONNECTION TO DEVICES. THE CONDUCTORS SHALL TEST FREE FROM SHORT CIRCUITS AND GROUNDS. TESTING SHALL BE FOR ONE MINUTE USING 1000V DC. PROVIDE WRITTEN DOCUMENTATION FOR ALL TEST RESULTS.

2. PRIOR TO ENERGIZING CIRCUITRY, TEST WIRING DEVICES FOR ELECTRICAL CONTINUITY AND PROPER POLARITY CONNECTIONS.

3. MEASURE AND RECORD VOLTAGES BETWEEN PHASES AND BETWEEN PHASE CONDUCTORS AND NEUTRALS. SUBMIT A REPORT OF MAXIMUM AND MINIMUM VOLTAGES.

4. PERFORM GROUNDING TEST TO MEASURE GROUNDING RESISTANCE OF GROUNDING SYSTEM USING THE IEEE STANDARD 3-POINT "FALL-OF-POTENTIAL" METHOD. PROVIDE PLOTTED TEST VALUES AND LOCATION SKETCH. NOTIFY THE ENGINEER IMMEDIATELY IF MEASURED VALUE IS OVER 5 OHMS.

APPLICANT/OWNER:

AT&T MOBILITY

16025 NORTHLAND DR
SOUTHFIELD, MI 48075

PREPARED BY:

BLACK & VEATCH

6800 W. 115TH ST, SUITE 2292
OVERLAND PARK, KANSAS 66211
(913) 458-2000

PROJECT NUMBER: 129391

STATE OF MICHIGAN
JOSHUA R. TURNER
No. 6201310514
LICENSED PROFESSIONAL ENGINEER
05/17/2022

IT IS A VIOLATION OF LAW FOR ANY PERSON, UNLESS THEY ARE ACTING UNDER THE DIRECTION OF A LICENSED PROFESSIONAL ENGINEER, TO ALTER THIS DOCUMENT.

LANDLORD/PROPERTY OWNER SIGNATURE

REV	DATE	DESCRIPTION
0	05.17.22	ISSUED FOR CONSTRUCTION

PROJECT LOCATION: USID (305880)

MI4740

40451 12 MILE ROAD
NOVI, MI 48377

DRAWING DESCRIPTION:

ELECTRICAL SECTION NOTES

DRAWING NUMBER:

E-1

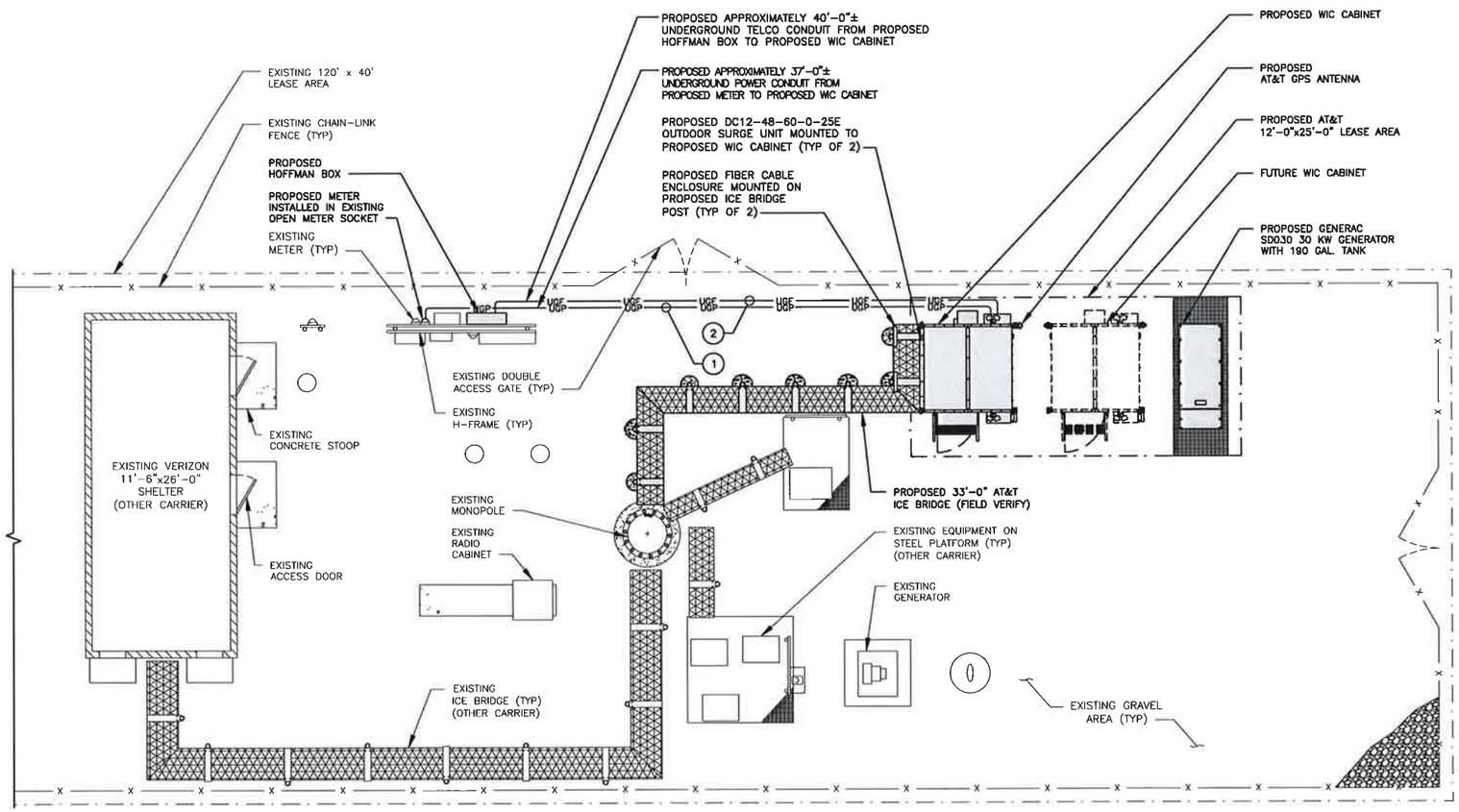

OVERALL ELECTRICAL PLAN

6' 4' 2' 0 5' 10'
3/16"=1'-0"

1

NOTE:
CONTRACTOR & FCM TO VERIFY DESIGN SHOWN ON DRAWINGS WITH DESIGN PROVIDED BY LEC AND EXISTING SITE CONDITIONS PRIOR TO THE START OF CONSTRUCTION. IF DISCREPANCIES ARE NOTED, CONTRACTOR OR FCM TO NOTIFY BLACK & VEATCH OF DISCREPANCIES PRIOR TO CONSTRUCTION START.

1. PROVIDE AND INSTALL (3) 1-1/4" HDPE CONDUIT WITH LONG SWEEPS FOR FIBER FROM PROPOSED HAND HOLE TO PROPOSED PLATFORM.
2. PROPOSED POWER IN PROPOSED 2-1/2" SCH 40 HDPE CONDUIT, FROM PROPOSED METER TO PROPOSED FUSIBLE DISCONNECT AT CABINET. (FIELD VERIFY LOCATION)
3. METER AT UTILITY H-FRAME.
4. CONTRACTOR TO COORDINATE POWER FEED, CONDUIT SIZE AND UTILITY LOCATIONS OF POWER ENTERING METER WITH LOCAL UTILITY PROVIDER.
5. PROPOSED HOFFMAN BOX ADDED TO UTILITY H-FRAME.
6. PROVIDE AND INSTALL (3) 1-1/4" HDPE CONDUIT WITH LONG SWEEPS FOR FIBER FROM PROPOSED HAND HOLE TO PROPOSED HOFFMAN BOX.
7. PROVIDE AND INSTALL (3) 1-1/4" HDPE CONDUIT WITH LONG SWEEPS FOR FIBER FROM PROPOSED HAND HOLE AT COMPOUND TO PROPOSED HAND HOLE IN RIGHT-OF-WAY.
8. PROPOSED HAND HOLE.
9. PROPOSED FIBER IN SINGLE 1-1/4" HDPE CONDUIT FROM PROPOSED HAND HOLE IN RIGHT-OF-WAY TO PROPOSED MEET-ME-POINT.
10. EDGE OF ACCESS DRIVE.
11. APPROXIMATE RIGHT-OF-WAY LOCATION. (CONTRACTOR TO VERIFY)
12. PROPOSED HAND HOLE AT RIGHT-OF-WAY FOR FIBER.
13. PROPOSED MEET-ME-POINT

ELECTRICAL KEY NOTES

1. ALL CONDUIT IN COMPOUND TO SWITCH TO SCH 80 WHEN CROSSING AN ACCESS POINT OR AREA FOR VEHICLE TRAFFIC (FIELD VERIFY LOCATION)
2. PULL STRING TO BE INSTALLED IN ALL PROPOSED CONDUIT.
3. WHEN BORING, CHANGE CONDUIT TO 4" HDPE CONDUIT.
4. THE CONDUIT ROUTING IS DIAGRAMMATICALLY SHOWN ON THE PLANS AND ARE ONLY APPROXIMATIONS. THE EXACT LOCATION AND ROUTING SHALL BE FIELD VERIFIED.
5. ALL ELECTRICAL EQUIPMENT AND CONTROLLING DEVICES SHALL BE PROVIDED WITH ENGRAVED LAMICOID NAMEPLATES, INDICATING THE CIRCUITS ORIGINATION AND ALL EQUIPMENT TERMINATIONS.
6. CONTRACTOR SHALL PROVIDE STRAIN-RELIEF AND CABLE SUPPORTS FOR ALL CABLE ASSEMBLIES, COAX CABLES, AND RET CONTROL CABLES. CABLE STRAIN-RELIEFS, CABLE SUPPORTS SHALL BE APPROVED FOR THE PURPOSE. INSTALLATION SHALL BE IN ACCORDANCE WITH THE MANUFACTURER'S SPECIFICATIONS AND RECOMMENDATIONS.
7. ALL CONDUITS SHALL BE INSTALLED IN COMPLIANCE WITH THE 2017 NATIONAL ELECTRIC CODE (NEC) OR AS REQUIRED BY THE LOCAL JURISDICTION, WHICHEVER IS THE MOST STRINGENT.
8. EXISTING UTILITIES MUST BE PROTECTED DURING CONSTRUCTION OF THE PROPOSED IMPROVEMENTS

NOTES

CHAIN-LINK FENCE	x x x x
LEASE AREA	
PROPOSED ICE BRIDGE	
EXISTING ICE BRIDGE	
OVERHEAD POWER	OHP OHP OHP OHP
UNDERGROUND POWER	UGP UGP UGP UGP
OVERHEAD UTILITIES	OHU OHU OHU OHU
UNDERGROUND FIBER & POWER	UGF/P UGF/P UGF/P UGF/P UGF/P
UNDERGROUND FIBER	UGF UGF UGF UGF

LEGEND

APPLICANT/OWNER:

AT&T MOBILITY

16025 NORTHLAND DR
SOUTHFIELD, MI 48075

PREPARED BY:

BLACK & VEATCH

6800 W. 115TH ST, SUITE 2292
OVERLAND PARK, KANSAS 66211
(913) 458-2000

PROJECT NUMBER: 129391

STATE OF MICHIGAN
JOSHUA R. TURNER
No. 6201310514
LICENSED PROFESSIONAL ENGINEER
05/17/2022

IT IS A VIOLATION OF LAW FOR ANY PERSON, UNLESS THEY ARE ACTING UNDER THE DIRECTION OF A LICENSED PROFESSIONAL ENGINEER, TO ALTER THIS DOCUMENT.

LANDLORD/PROPERTY OWNER SIGNATURE

REV	DATE	DESCRIPTION
0	05.17.22	ISSUED FOR CONSTRUCTION

PROJECT LOCATION: USID (305880)

MI4740

40451 12 MILE ROAD
NOVI, MI 48377

DRAWING DESCRIPTION:

OVERALL ELECTRICAL PLAN

DRAWING NUMBER:

E-2

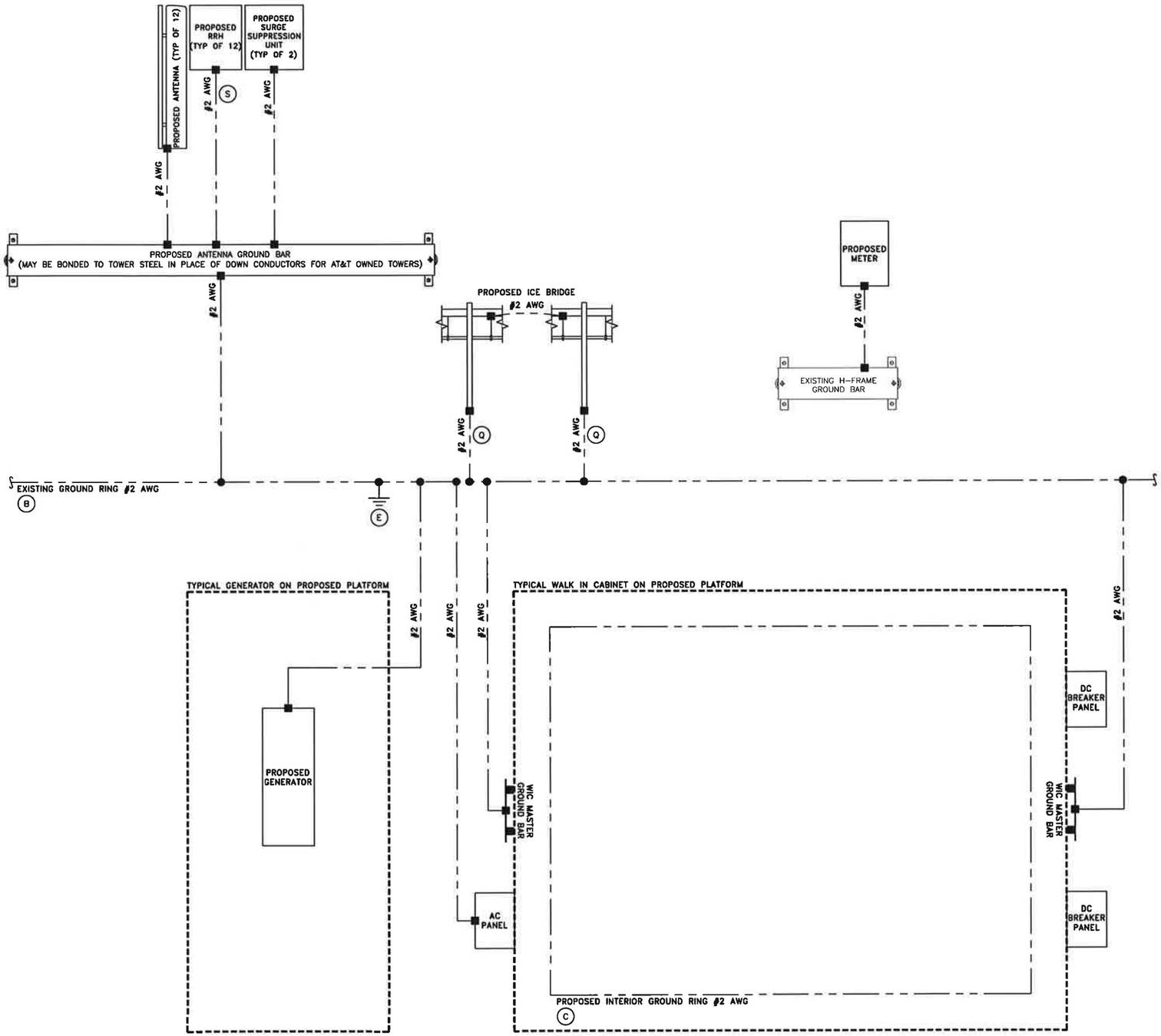

TOWER ANTENNA EQUIPMENT GROUNDING ONE-LINE

● EXOTHERMIC CONNECTION ■ MECHANICAL CONNECTION ⏚ GROUND ROD

LEGEND

1. GROUNDING IS SHOWN DIAGRAMMATICALLY ONLY.
2. CONTRACTOR SHALL GROUND ALL EQUIPMENT AS A COMPLETE SYSTEM. GROUNDING SHALL BE IN COMPLIANCE WITH NEC SECTION 250 AND AT&T GROUNDING AND BONDING REQUIREMENTS (ATT-TP-76416) AND MANUFACTURER'S SPECIFICATIONS.
3. ALL EXTERIOR GRADE GROUND CONDUCTORS SHALL BE SUNLIGHT RESISTANT GREEN TINNED STRANDED COPPER.
4. RF EQUIPMENT BUS BAR SHALL BE ISOLATED FROM THE EQUIPMENT RACKS METAL FRAMEWORK.
5. ALL GROUND CONDUCTORS SHALL BE COPPER; NO ALUMINUM CONDUCTORS SHALL BE USED.

NOTES

(A) EXTERIOR GROUND RING: #2 AWG SOLID COPPER, BURIED AT A DEPTH OF AT LEAST 30 INCHES BELOW GRADE, OR 6 INCHES BELOW THE FROST LINE AND APPROXIMATELY 24 INCHES FROM THE EXTERIOR WALL OR FOOTING. (ATT-TP-76416 2.2.3.5/7.5.1)

(B) TOWER GROUND RING: THE GROUND RING SYSTEM SHALL BE INSTALLED AROUND AN ANTENNA TOWER'S LEGS, AND/OR GUY ANCHORS. WHERE SEPARATE SYSTEMS HAVE BEEN PROVIDED FOR THE TOWER AND THE BUILDING, AT LEAST TWO BONDS SHALL BE MADE BETWEEN THE TOWER RING GROUND SYSTEM AND THE BUILDING RING GROUND SYSTEM USING MINIMUM #2 AWG SOLID COPPER CONDUCTORS. (ATT-TP-76416 7.5.1)

(C) INTERIOR GROUND RING: #2 AWG STRANDED GREEN INSULATED COPPER CONDUCTOR EXTENDED AROUND THE PERIMETER OF THE EQUIPMENT AREA. ALL NON-TELECOMMUNICATIONS RELATED METALLIC OBJECTS FOUND WITHIN A SITE SHALL BE GROUNDED TO THE INTERIOR GROUND RING WITH #6 AWG STRANDED GREEN INSULATED CONDUCTOR. (ATT-TP-76416 7.6.4)

(D) BOND TO INTERIOR GROUND RING: #2 AWG SOLID TINNED COPPER WIRE PRIMARY BONDS SHALL BE PROVIDED AT LEAST AT FOUR POINTS ON THE INTERIOR GROUND RING, LOCATED AT THE CORNERS OF THE BUILDING. (ATT-TP-76416 7.5.2.2)

(E) GROUND ROD: UL LISTED COPPER CLAD STEEL. MINIMUM 5/8" DIAMETER BY EIGHT FEET LONG. ALL GROUND RODS SHALL BE INSTALLED WITH INSPECTION SLEEVES. GROUND RODS SHALL BE DRIVEN TO THE DEPTH OF GROUND RING CONDUCTOR. (ATT-TP-76416 7.5.1.3. SEPARATION OF GROUND RODS SHOULD BE TWICE THEIR LENGTH PER ATT-TP-76418 2.2.3.9).

(F) CELL REFERENCE GROUND BAR: POINT OF GROUND REFERENCE FOR ALL COMMUNICATIONS EQUIPMENT FRAMES. ALL BONDS ARE MADE WITH #2 AWG STRANDED GREEN INSULATED COPPER CONDUCTORS UNLESS OTHERWISE NOTED. BOND TO GROUND RING WITH (2) #2 SOLID TINNED COPPER CONDUCTORS. (ATT-TP-76416 7.6.7)

(G) HATCH PLATE GROUND BAR: BOND TO THE INTERIOR GROUND RING WITH TWO #2 AWG STRANDED GREEN INSULATED COPPER CONDUCTORS. WHEN A HATCH-PLATE AND A CELL REFERENCE GROUND BAR ARE BOTH PRESENT, THE CRGB MUST BE CONNECTED TO THE HATCH-PLATE AND TO THE INTERIOR GROUND RING USING #2 AWG STRANDED GREEN INSULATED COPPER CONDUCTORS.

(H) EXTERIOR CABLE ENTRY PORT GROUND BARS: LOCATED AT THE ENTRANCE TO THE CELL SITE BUILDING. BOND TO GROUND RING WITH A #2 AWG SOLID TINNED COPPER CONDUCTORS WITH AN EXOTHERMIC WELD AND INSPECTION SLEEVE. (ATT-TP-76416 7.6.7.2)

(J) TOWER EXIT GROUND BAR: #2 AWG SOLID TINNED COPPER BOND TO THE TOWER GROUND RING. (ATT-TP-76416 7.5.5)

(K) TELCO GROUND BAR: BOND TO BOTH CELL REFERENCE GROUND BAR AND EXTERIOR GROUND RING. (ATT-TP-76416 7.6.8)

(L) FRAME BONDING: THE BONDING POINT FOR TELECOM EQUIPMENT FRAMES SHALL BE THE GROUND BUS THAT IS NOT ISOLATED FROM THE EQUIPMENTS METAL FRAMEWORK. BOND THE FRAME GROUND BUS TO THE "I" SECTION OF THE CELL REFERENCE GROUND BAR. (ATT-TP-76416 7.8)

(M) INTERIOR UNIT BONDS: METAL FRAMES, CABINETS AND INDIVIDUAL METALLIC UNITS LOCATED WITH THE AREA OF THE INTERIOR GROUND RING REQUIRE A #6 AWG STRANDED GREEN INSULATED COPPER BOND TO THE INTERIOR GROUND RING. (ATT-TP-76416 7.12.3.1)

(N) FENCE AND GATE GROUNDING: METAL FENCES WITHIN 7 FEET OF THE EXTERIOR GROUND RING OR OBJECTS BONDED TO THE EXTERIOR GROUND RING SHALL BE BONDED TO THE GROUND RING WITH A #2 AWG SOLID TINNED COPPER CONDUCTOR AT AN INTERVAL NOT EXCEEDING 25 FEET. BONDS SHALL BE MADE AT EACH GATE POST AND ACROSS GATE OPENINGS. (ATT-TP-76416 7.12.2.2)

(P) EXTERIOR UNIT BONDS: METALLIC OBJECTS, EXTERNAL TO OR MOUNTED TO THE BUILDING, SHALL BE BONDED TO THE EXTERIOR GROUND RING. (ATT-TP-76416 7.12.2)

(Q) ICE BRIDGE SUPPORTS: EACH ICE BRIDGE LEG SHALL BE BONDED TO THE GROUND RING WITH #2 AWG BARE TINNED COPPER CONDUCTOR. PROVIDE EXOTHERMIC WELDS AT BOTH THE ICE BRIDGE LEG AND BURIED GROUND RING. (ATT-TP-76416 7.4.2.6)

(R) DURING ALL DC POWER SYSTEM CHANGES INCLUDING DC SYSTEM CHANGE OUTS, RECTIFIER REPLACEMENTS OR ADDITIONS, BREAKER DISTRIBUTION CHANGES, BATTERY ADDITIONS, BATTERY REPLACEMENTS AND INSTALLATIONS OR CHANGES TO DC CONVERTER SYSTEMS IT SHALL BE REQUIRED THAT SERVICES CONTRACTORS VERIFY ALL DC POWER SYSTEMS ARE EQUIPPED WITH A MASTER DC SYSTEM RETURN GROUND CONDUCTOR FROM THE DC POWER SYSTEM COMMON RETURN BUS DIRECTLY CONNECTED TO THE CELL SITE REFERENCE GROUND BAR (CRGB) PER TP76300 SECTION H 6 AND TP76416 FIGURE 7-11 REQUIREMENTS.

(S) ALL ALU 2X60W 850 AND 1900 RRHS REQUIRE TWO GROUNDS, ONE ON TOP AND ONE ON BOTTOM.

GROUNDING KEY NOTES

APPLICANT/OWNER:

AT&T MOBILITY

16025 NORTHLAND DR
SOUTHFIELD, MI 48075

PREPARED BY:

BLACK & VEATCH

6800 W. 115TH ST, SUITE 2292
OVERLAND PARK, KANSAS 66211
(913) 458-2000

PROJECT NUMBER: 129391

STATE OF MICHIGAN
JOSHUA R. TURNER
No. 6201310514
LICENSED PROFESSIONAL ENGINEER
05/17/2022

IT IS A VIOLATION OF LAW FOR ANY PERSON, UNLESS THEY ARE ACTING UNDER THE DIRECTION OF A LICENSED PROFESSIONAL ENGINEER, TO ALTER THIS DOCUMENT.

LANDLORD/PROPERTY OWNER SIGNATURE

REV	DATE	DESCRIPTION
0	05.17.22	ISSUED FOR CONSTRUCTION

PROJECT LOCATION: USID (305880)

MI4740

40451 12 MILE ROAD
NOVI, MI 48377

DRAWING DESCRIPTION:

ONE-LINE GROUNDING DIAGRAM

DRAWING NUMBER:

E-3

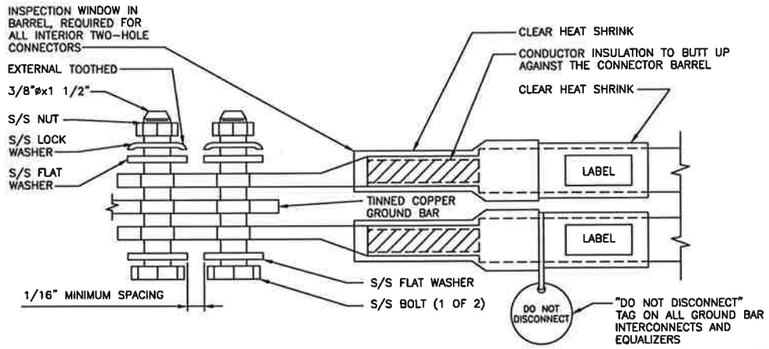

NOTES

1. EXOTHERMIC WELD (2) TWO, #2 AWG BARE TINNED SOLID COPPER CONDUCTORS TO GROUND BAR. ROUTE CONDUCTORS TO BURIED GROUND RING AND PROVIDE PARALLEL EXOTHERMIC WELD.
2. ALL GROUND BARS SHALL BE STAMPED IN TO THE METAL "IF STOLEN DO NOT RECYCLE." THE CONTRACTOR SHALL USE PERMANENT MARKER TO DRAW THE LINES BETWEEN EACH SECTION AND LABEL EACH SECTION ("P", "A", "I") WITH 1" HIGH LETTERS.
3. ALL HARDWARE SHALL BE STAINLESS STEEL 3/8" DIAMETER OR LARGER. ALL HARDWARE 18-8 STAINLESS STEEL INCLUDING LOCK WASHERS, COAT ALL SURFACES WITH AN ANTI-OXIDANT COMPOUND BEFORE MATING.
4. FOR GROUND BOND TO STEEL ONLY: INSERT A CADMIUM FLAT WASHER BETWEEN LUG AND STEEL, COAT ALL SURFACES WITH AN ANTI-OXIDANT COMPOUND BEFORE MATING.
5. DO NOT INSTALL CABLE GROUND KIT AT A BEND AND ALWAYS DIRECT GROUND CONDUCTOR DOWN TO GROUND BUS.
6. NUT & WASHER SHALL BE PLACED ON THE FRONT SIDE OF THE GROUND BAR AND BOLTED ON THE BACK SIDE. INSTALL BLACK HEAT-SHRINKING TUBE, 600 VOLT INSULATION, ON ALL GROUND TERMINATIONS. THE INTENT IS TO WEATHERPROOF THE COMPRESSION CONNECTION.
7. SUPPLIED AND INSTALLED BY CONTRACTOR.
8. THE CONTRACTOR SHALL BE RESPONSIBLE FOR INSTALLING ADDITIONAL GROUND BAR AS REQUIRED, PROVIDING 50% SPARE CONNECTION POINTS.
9. ENSURE THE WIRE INSULATION TERMINATION IS WITHIN 1/8" OF THE BARREL (NO SHINERS).
10. BOLTS SHALL BE MADE "SNUG-TIGHT" PLUS 1/4 TURN.

INTERIOR TWO HOLE LUG DETAIL — NO SCALE — 1

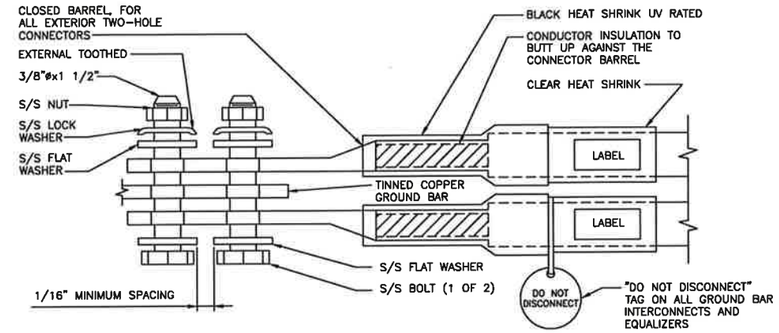

NOTES

1. EXOTHERMIC WELD (2) TWO, #2 AWG BARE TINNED SOLID COPPER CONDUCTORS TO GROUND BAR. ROUTE CONDUCTORS TO BURIED GROUND RING AND PROVIDE PARALLEL EXOTHERMIC WELD.
2. ALL GROUND BARS SHALL BE STAMPED IN TO THE METAL "IF STOLEN DO NOT RECYCLE." THE CONTRACTOR SHALL USE PERMANENT MARKER TO DRAW THE LINES BETWEEN EACH SECTION AND LABEL EACH SECTION ("P", "A", "I") WITH 1" HIGH LETTERS.
3. ALL HARDWARE SHALL BE STAINLESS STEEL 3/8" DIAMETER OR LARGER. ALL HARDWARE 18-8 STAINLESS STEEL INCLUDING LOCK WASHERS, COAT ALL SURFACES WITH AN ANTI-OXIDANT COMPOUND BEFORE MATING.
4. FOR GROUND BOND TO STEEL ONLY: INSERT A CADMIUM FLAT WASHER BETWEEN LUG AND STEEL, COAT ALL SURFACES WITH AN ANTI-OXIDANT COMPOUND BEFORE MATING.
5. DO NOT INSTALL CABLE GROUND KIT AT A BEND AND ALWAYS DIRECT GROUND CONDUCTOR DOWN TO GROUND BUS.
6. NUT & WASHER SHALL BE PLACED ON THE FRONT SIDE OF THE GROUND BAR AND BOLTED ON THE BACK SIDE. INSTALL BLACK HEAT-SHRINKING TUBE, 600 VOLT INSULATION, ON ALL GROUND TERMINATIONS. THE INTENT IS TO WEATHERPROOF THE COMPRESSION CONNECTION.
7. SUPPLIED AND INSTALLED BY CONTRACTOR.
8. THE CONTRACTOR SHALL BE RESPONSIBLE FOR INSTALLING ADDITIONAL GROUND BAR AS REQUIRED, PROVIDING 50% SPARE CONNECTION POINTS.
9. ENSURE THE WIRE INSULATION TERMINATION IS WITHIN 1/8" OF THE BARREL (NO SHINERS).
10. BOLTS SHALL BE MADE "SNUG-TIGHT" PLUS 1/4 TURN.

EXTERIOR TWO HOLE LUG DETAIL — NO SCALE — 2

NEWTON INSTRUMENT COMPANY, INC. BUTNER, N.C.

NO	REQUIRED	PART NUMBER	DESCRIPTION
1	1	HAGAR TGBI-14420C OR A.L.T 382227	GALVANIZED STEEL GROUND BAR * (1/4" x 4" x 20)
2	2	A-6056	WALL MOUNTING BRACKET
3	2	3061-4	INSULATORS
4	2	3012-1	5/8"-11x1" H.H.C.S. BOLTS
5	4	3015-8	5/8" LOCKWASHER

* HOLE CENTERS TO MATCH NEMA DOUBLE LUG CONFIGURATION.

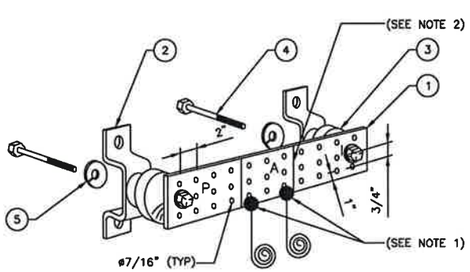

EACH GROUND CONDUCTOR TERMINATING ON ANY GROUND BAR SHALL HAVE AN IDENTIFICATION TAG ATTACHED AT EACH END THAT WILL IDENTIFY ITS ORIGIN AND DESTINATION

SECTION "P" - SURGE PROTECTORS

(EC) CELL REFERENCE GROUND BAR (IF COLLOCATED)
(EC) GENERATOR FRAMEWORK (IF AVAILABLE) (#2 AWG)
(EC) TELCO GROUND BAR (#2 AWG)
(EC) COMMERCIAL POWER COMMON NEUTRAL/GROUND BOND (3/0)
(EC) FIBER GROUND BAR (#2 AWG)
(EC) POWER ROOM REFERENCE GROUND BAR (#2 AWG)
(AT&T) RECTIFIER FRAMES

SECTION "A" - SURGE ABSORBERS

(EC) INTERIOR GROUND RING (#2 AWG)
(EC) EXTERNAL EARTH GROUND FIELD (BURIED GROUND RING) (#2 AWG)
(EC) METALLIC COLD WATER PIPE (IF AVAILABLE) (1/0 AWG)
(EC) BUILDING STEEL (IF AVAILABLE) (1/0 AWG)

SECTION "I" - ISOLATED GROUND ZONE

(AT&T) ALL ISOLATED GROUND REFERENCE
(AT&T) GROUND WINDOW BAR

DETAIL NOTES

1. EXOTHERMICALLY WELD #2 AWG BARE TINNED SOLID COPPER CONDUCTOR TO GROUND BAR. ROUTE CONDUCTOR TO BURIED GROUND RING AND PROVIDE PARALLEL EXOTHERMIC WELD.
2. THE INSTALLER SHALL USE PERMANENT MARKER TO DRAW THE LIKE BETWEEN SECTION AND LABEL EACH SECTION ("P", "A", "I" WITH 1" HIGH LETTERS

REFERENCE GROUNDING BAR DETAIL — NO SCALE — 3

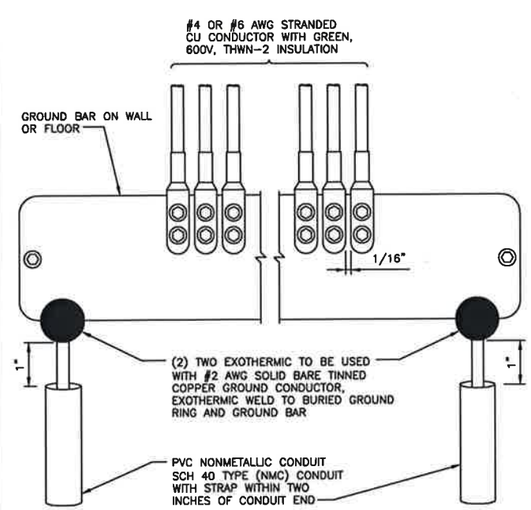

GROUNDING BAR DETAIL — NO SCALE — 4

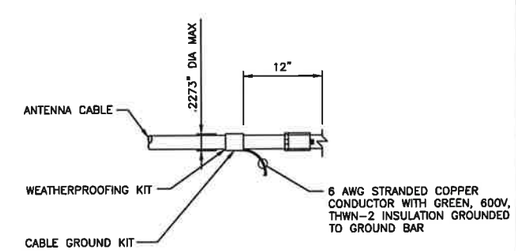

CONNECTION OF CABLE GROUNDING KIT TO ANTENNA CABLE — NO SCALE — 5

APPLICANT/OWNER:

AT&T MOBILITY

16025 NORTHLAND DR
SOUTHFIELD, MI 48075

PREPARED BY:

BLACK & VEATCH

6800 W. 115TH ST, SUITE 2292
OVERLAND PARK, KANSAS 66211
(913) 458-2000

PROJECT NUMBER: 129391

STATE OF MICHIGAN
JOSHUA R. TURNER
No. 6201310514
LICENSED PROFESSIONAL ENGINEER
05/17/2022

IT IS A VIOLATION OF LAW FOR ANY PERSON, UNLESS THEY ARE ACTING UNDER THE DIRECTION OF A LICENSED PROFESSIONAL ENGINEER, TO ALTER THIS DOCUMENT.

LANDLORD/PROPERTY OWNER SIGNATURE

REV	DATE	DESCRIPTION
0	05.17.22	ISSUED FOR CONSTRUCTION

PROJECT LOCATION: USID (305880)

MI4740

40451 12 MILE ROAD
NOVI, MI 48377

DRAWING DESCRIPTION:

GROUNDING DETAILS

DRAWING NUMBER:

E-4

NOT USED	NO SCALE	1	NOT USED	NO SCALE	2	NOT USED	NO SCALE	3	NOTES

1. NUMBER OF GROUND BARS MAY VARY DEPENDING ON THE TYPE OF TOWER, ANTENNA LOCATION, AND CONNECTION ORIENTATION. THE CONTRACTOR SHALL BE RESPONSIBLE FOR INSTALLING ADDITIONAL GROUND BAR AS REQUIRED, PROVIDING 50% SPARE CONNECTION POINTS.
2. DO NOT INSTALL CABLE GROUND KIT AT A BEND AND ALWAYS DIRECT GROUND CONDUCTOR DOWN TO GROUND BAR.
3. GROUND KIT SHALL BE TYPE AND PART NUMBER AS SUPPLIED OR RECOMMENDED BY CABLE MANUFACTURER.
4. WEATHER PROOFING SHALL BE TYPE AND PART NUMBER AS SUPPLIED OR RECOMMENDED BY CABLE MANUFACTURER.
5. PROVIDE GROUND KIT 6" BEFORE TURN TRANSITION FROM TOWER TO ICE BRIDGE.
6. WHEN THE SCOPE OF WORK REQUIRES THE ADDITION OF A GROUND BAR TO AN EXISTING TOWER, THE CONTRACTOR SHALL OBTAIN APPROVAL FROM THE TOWER OWNER PRIOR TO MOUNTING THE GROUND BARS TO THE TOWER.
7. EXTEND TWO (2) #2 AWG TINNED CU CONDUCTOR FROM BURIED GROUND RING AND CONNECT TO THE PROPOSED TOWER. FOLLOW MANUFACTURERS RECOMMENDATIONS FOR GROUND CONNECTIONS TO THE TOWER. (APPLICABLE TO NEW TOWERS ONLY.)

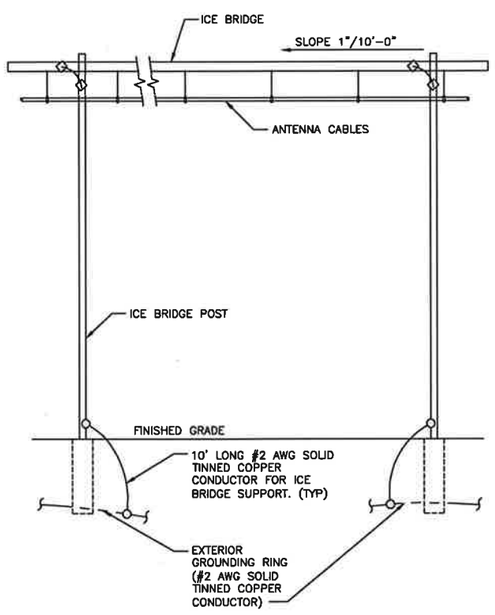

ICE BRIDGE DETAIL	NO SCALE	4	NOT USED	NO SCALE	5

APPLICANT/OWNER:

AT&T MOBILITY

16025 NORTHLAND DR
SOUTHFIELD, MI 48075

PREPARED BY:

BLACK & VEATCH

6800 W. 115TH ST, SUITE 2292
OVERLAND PARK, KANSAS 66211
(913) 458-2000

PROJECT NUMBER: 129391

STATE OF MICHIGAN
JOSHUA R. TURNER
No. 6201310514
LICENSED PROFESSIONAL ENGINEER
05/17/2022

IT IS A VIOLATION OF LAW FOR ANY PERSON, UNLESS THEY ARE ACTING UNDER THE DIRECTION OF A LICENSED PROFESSIONAL ENGINEER, TO ALTER THIS DOCUMENT.

LANDLORD/PROPERTY OWNER SIGNATURE

REV	DATE	DESCRIPTION
0	05.17.22	ISSUED FOR CONSTRUCTION

PROJECT LOCATION: USID (305880)

MI4740

40451 12 MILE ROAD
NOVI, MI 48377

DRAWING DESCRIPTION:

GROUNDING DETAILS

DRAWING NUMBER:

E-5

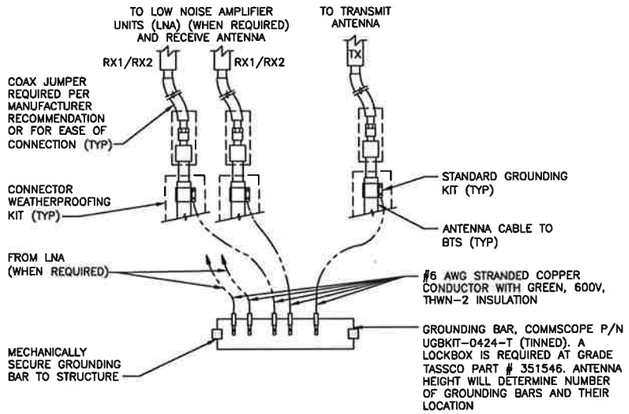

ANTENNA GROUNDING BAR DETAIL | NO SCALE | 1

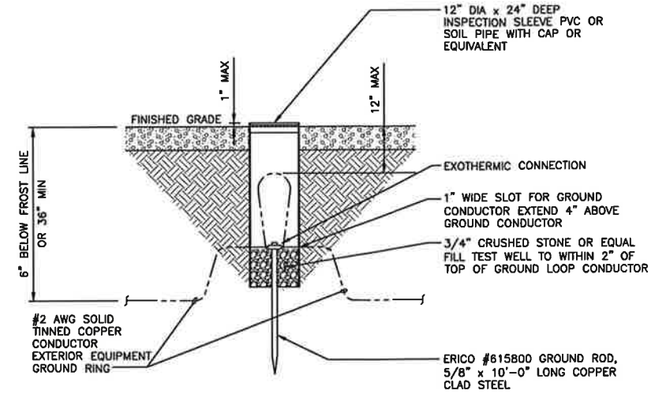

TEST GROUND ROD WITH INSPECTION SLEEVE DETAIL | NO SCALE | 2

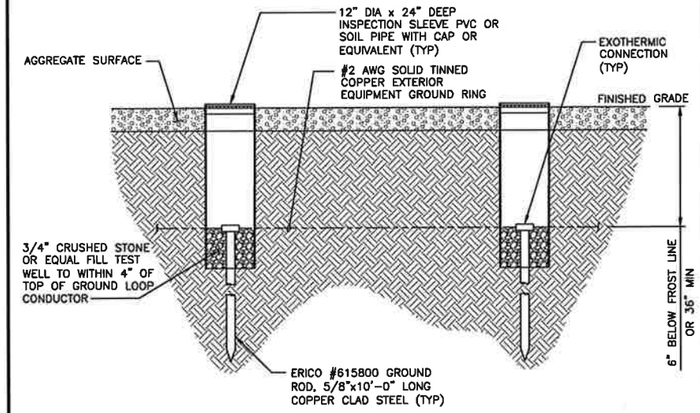

GROUNDING ROD WITH INSPECTION SLEEVE DETAIL | NO SCALE | 3

NOTE

1. NO GEOTECHNICAL REPORT WAS ISSUED FOR THIS SITE. ALL DESIGN WORK IS BASED ON ASSUMED SITE CONDITIONS.

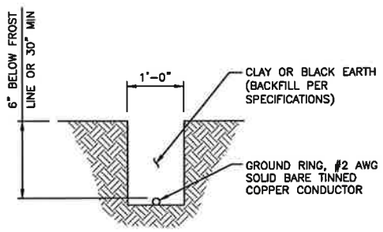

GROUNDING RING TRENCH DETAIL | NO SCALE | 4

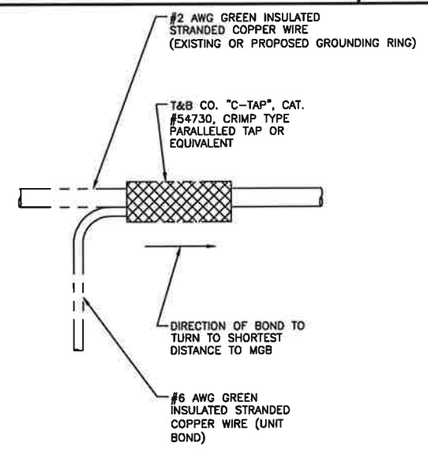

GROUNDING WIRE CONNECTION DETAIL | NO SCALE | 5

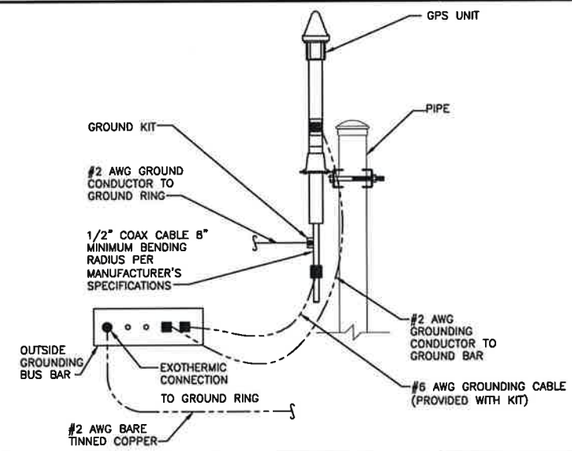

LTE GPS ANTENNA GROUNDING DETAIL | NO SCALE | 6

NOT USED | NO SCALE | 7

NOT USED | NO SCALE | 8

NOT USED | NO SCALE | 9

APPLICANT/OWNER:

AT&T MOBILITY

16025 NORTHLAND DR
SOUTHFIELD, MI 48075

PREPARED BY:

BLACK & VEATCH

6800 W. 115TH ST, SUITE 2292
OVERLAND PARK, KANSAS 66211
(913) 458-2000

PROJECT NUMBER: 129391

STATE OF MICHIGAN
JOSHUA R. TURNER
No. 6201310514
LICENSED PROFESSIONAL ENGINEER
05/17/2022

IT IS A VIOLATION OF LAW FOR ANY PERSON, UNLESS THEY ARE ACTING UNDER THE DIRECTION OF A LICENSED PROFESSIONAL ENGINEER, TO ALTER THIS DOCUMENT.

LANDLORD/PROPERTY OWNER SIGNATURE

REV	DATE	DESCRIPTION
0	05.17.22	ISSUED FOR CONSTRUCTION

PROJECT LOCATION: USID (305880)

MI4740

40451 12 MILE ROAD
NOVI, MI 48377

DRAWING DESCRIPTION:

GROUNDING DETAILS

DRAWING NUMBER:

E-6

EXOTHERMIC CONNECTION	
MECHANICAL CONNECTION	
CHEMICAL ELECTROLYTIC GROUNDING SYSTEM	
TEST CHEMICAL ELECTROLYTIC GROUNDING SYSTEM	T
EXOTHERMIC WITH INSPECTION SLEEVE	
GROUNDING BAR	
GROUND ROD	
TEST GROUND ROD WITH INSPECTION SLEEVE	T
SINGLE POLE SWITCH	$
DUPLEX RECEPTACLE	
DUPLEX GFCI RECEPTACLE	GFC
FLUORESCENT LIGHTING FIXTURE (2) TWO LAMPS 48-T8	F
SMOKE DETECTION (DC)	SD
EMERGENCY LIGHTING (DC)	
SECURITY LIGHT W/PHOTOCELL LITHONIA ALXW LED-1-25A400/51K-SR4-120-PE-DDBTXD	
CHAINLINK FENCE	X X X X
WOOD/WROUGHT IRON FENCE	
WALL STRUCTURE	
LEASE AREA	
PROPERTY LINE (PL)	
SETBACKS	
PROPOSED ICE BRIDGE	
EXISTING ICE BRIDGE	
EXISTING CABLE TRAY	
WATER LINE	
UNDERGROUND POWER	UGP UGP UGP UGP
UNDERGROUND TELCO	UGT UGT UGT UGT
OVERHEAD POWER	OHP OHP OHP OHP
OVERHEAD TELCO	OHT OHT OHT OHT
UNDERGROUND TELCO/POWER	UGT/P UGT/P UGT/P UGT/P
ABOVE GROUND POWER	AGP AGP AGP AGP AGP
ABOVE GROUND TELCO	AGT AGT AGT AGT AGT
ABOVE GROUND TELCO/POWER	AGT/P AGT/P AGT/P AGT/P
WORKPOINT	W.P.
SECTION REFERENCE	XX / X-X
DETAIL REFERENCE	XX / X-X
PHOTO REFERENCE	PHOTO / TITLE PAGE

AB	ANCHOR BOLT
ABV	ABOVE
AC	ALTERNATING CURRENT
ADDL	ADDITIONAL
AFF	ABOVE FINISHED FLOOR
AFG	ABOVE FINISHED GRADE
AIC	AMPERAGE INTERRUPTION CAPACITY
ALUM	ALUMINUM
ALT	ALTERNATE
ANT	ANTENNA
APPROX	APPROXIMATE
ARCH	ARCHITECTURAL
ATS	AUTOMATIC TRANSFER SWITCH
AWG	AMERICAN WIRE GAUGE
BATT	BATTERY
BLDG	BUILDING
BLK	BLOCK
BLKG	BLOCKING
BM	BEAM
BTC	BARE TINNED COPPER CONDUCTOR
BOF	BOTTOM OF FOOTING
CAB	CABINET
CANT	CANTILEVERED
CEC	CALIFORNIA ELECTRIC CODE
CHG	CHARGING
CLG	CEILING
CLR	CLEAR
COL	COLUMN
COMM	COMMON
CONC	CONCRETE
CONSTR	CONSTRUCTION
DBL	DOUBLE
DC	DIRECT CURRENT
DEPT	DEPARTMENT
DF	DOUGLAS FIR
DIA	DIAMETER
DIAG	DIAGONAL
DIM	DIMENSION
DWG	DRAWING
DWL	DOWEL
(E)	EXISTING
EA	EACH
EC	ELECTRICAL CONDUCTOR
EL	ELEVATION
ELEC	ELECTRICAL
EMT	ELECTRICAL METALLIC TUBING
ENG	ENGINEER
EQ	EQUAL
EXP	EXPANSION
EXT	EXTERIOR
FAB	FABRICATION
FF	FINISH FLOOR
FG	FINISH GRADE
FIF	FACILITY INTERFACE FRAME
FIN	FINISH(ED)
FLR	FLOOR
FDN	FOUNDATION
FOC	FACE OF CONCRETE
FOM	FACE OF MASONRY
FOS	FACE OF STUD
FOW	FACE OF WALL
FS	FINISH SURFACE
FT	FOOT
FTG	FOOTING
GA	GAUGE
GEN	GENERATOR
GFCI	GROUND FAULT CIRCUIT INTERRUPTER
GLB	GLUE LAMINATED BEAM
GLV	GALVANIZED
GPS	GLOBAL POSITIONING SYSTEM
GND	GROUND
GSM	GLOBAL SYSTEM FOR MOBILE
HDR	HEADER
HGR	HANGER
HVAC	HEAT/VENTILATION/AIR CONDITIONING
HT	HEIGHT
IGR	INTERIOR GROUND RING
IN	INCH

INT	INTERIOR
LB(S)	POUND(S)
LF	LINEAR FEET
LTE	LONG TERM EVOLUTION
MAS	MASONRY
MAX	MAXIMUM
MB	MACHINE BOLT
MECH	MECHANICAL
MFR	MANUFACTURER
MGB	MASTER GROUND BAR
MIN	MINIMUM
MISC	MISCELLANEOUS
MTL	METAL
MTS	MANUAL TRANSFER SWITCH
MW	MICROWAVE
(N)	NEW
NEC	NATIONAL ELECTRIC CODE
NO.(#)	NUMBER
NTS	NOT TO SCALE
OC	ON CENTER
OPNG	OPENING
(P)	PROPOSED
P/C	PRECAST CONCRETE
PCS	PERSONAL COMMUNICATION SERVICES
PCU	PRIMARY CONTROL UNIT
PRC	PRIMARY RADIO CABINET
PP	POLARIZING PRESERVING
PSF	POUNDS PER SQUARE FOOT
PSI	POUNDS PER SQUARE INCH
PT	PRESSURE TREATED
PWR	POWER CABINET
QTY	QUANTITY
RAD	RADIUS
RECT	RECTIFIER
REF	REFERENCE
REINF	REINFORCEMENT
REQ'D	REQUIRED
RET	REMOTE ELECTRIC TILT
RMC	RIGID METALLIC CONDUIT
RRH	REMOTE RADIO HEAD
RRU	REMOTE RADIO UNIT
RWY	RACEWAY
SCH	SCHEDULE
SHT	SHEET
SIAD	SMART INTEGRATED DEVICE
SIM	SIMILAR
SPEC	SPECIFICATION
SQ	SQUARE
SS	STAINLESS STEEL
STD	STANDARD
STL	STEEL
STRUCT	STRUCTURAL
TEMP	TEMPORARY
THK	THICKNESS
TMA	TOWER MOUNTED AMPLIFIER
TN	TOE NAIL
TOA	TOP OF ANTENNA
TOC	TOP OF CURB
TOF	TOP OF FOUNDATION
TOP	TOP OF PLATE (PARAPET)
TOS	TOP OF STEEL
TOW	TOP OF WALL
TVSS	TRANSIENT VOLTAGE SUPPRESSION SYSTEM
TYP	TYPICAL
UG	UNDERGROUND
UL	UNDERWRITERS LABORATORY
UNO	UNLESS NOTED OTHERWISE
UMTS	UNIVERSAL MOBILE TELECOMMUNICATIONS SYSTEM
UPS	UNINTERRUPTIBLE POWER SYSTEM (DC POWER PLANT)
VIF	VERIFIED IN FIELD
W	WIDE
W/	WITH
WD	WOOD
W.P.	WORK POINT
WP	WEATHERPROOF
WT	WEIGHT

LEGEND & ABBREVIATIONS

1

NOT USED

2

APPLICANT/OWNER:

AT&T MOBILITY

16025 NORTHLAND DR
SOUTHFIELD, MI 48075

PREPARED BY:

BLACK & VEATCH

6800 W. 115TH ST, SUITE 2292
OVERLAND PARK, KANSAS 66211
(913) 458-2000

PROJECT NUMBER: 129391

STATE OF MICHIGAN
JOSHUA R. TURNER
No. 6201310514
LICENSED PROFESSIONAL ENGINEER
05/17/2022

IT IS A VIOLATION OF LAW FOR ANY PERSON, UNLESS THEY ARE ACTING UNDER THE DIRECTION OF A LICENSED PROFESSIONAL ENGINEER, TO ALTER THIS DOCUMENT.

LANDLORD/PROPERTY OWNER SIGNATURE

REV	DATE	DESCRIPTION
0	05.17.22	ISSUED FOR CONSTRUCTION

PROJECT LOCATION: USID (305880)

MI4740

40451 12 MILE ROAD
NOVI, MI 48377

DRAWING DESCRIPTION:

GENERAL NOTES

DRAWING NUMBER:

N-1

GENERAL CONSTRUCTION

1. FOR THE PURPOSE OF CONSTRUCTION DRAWINGS, THE FOLLOWING DEFINITIONS SHALL APPLY:
   GENERAL CONTRACTOR – OVERLAND CONTRACTING INC. (B&V)
   CONTRACTOR: (CONSTRUCTION)
   OWNER – AT&T
2. ALL SITE WORK SHALL BE COMPLETED AS INDICATED ON THE DRAWINGS AND AT&T PROJECT SPECIFICATIONS.
3. GENERAL CONTRACTOR SHALL VISIT THE SITE AND SHALL FAMILIARIZE HIMSELF WITH ALL CONDITIONS AFFECTING THE PROPOSED WORK AND SHALL MAKE PROVISIONS. GENERAL CONTRACTOR SHALL BE RESPONSIBLE FOR FAMILIARIZING HIMSELF WITH ALL CONTRACT DOCUMENTS, FIELD CONDITIONS, DIMENSIONS, AND CONFIRMING THAT THE WORK MAY BE ACCOMPLISHED AS SHOWN PRIOR TO PROCEEDING WITH CONSTRUCTION. ANY DISCREPANCIES SHALL BE BROUGHT TO THE ATTENTION OF THE ENGINEER PRIOR TO THE COMMENCEMENT OF WORK.
4. ALL MATERIALS FURNISHED AND INSTALLED SHALL BE IN STRICT ACCORDANCE WITH ALL APPLICABLE CODES, REGULATIONS, AND ORDINANCES. GENERAL CONTRACTOR SHALL ISSUE ALL APPROPRIATE NOTICES AND COMPLY WITH ALL LAWS, ORDINANCES, RULES, REGULATIONS, AND LAWFUL ORDERS OF ANY PUBLIC AUTHORITY REGARDING THE PERFORMANCE OF WORK.
5. ALL WORK CARRIED OUT SHALL COMPLY WITH ALL APPLICABLE MUNICIPAL AND UTILITY COMPANY SPECIFICATIONS AND LOCAL JURISDICTIONAL CODES, ORDINANCES, AND APPLICABLE REGULATIONS.
6. UNLESS NOTED OTHERWISE, THE WORK SHALL INCLUDE FURNISHING MATERIALS, EQUIPMENT, APPURTENANCES, AND LABOR NECESSARY TO COMPLETE ALL INSTALLATIONS AS INDICATED ON THE DRAWINGS.
7. PLANS ARE NOT TO BE SCALED. THESE PLANS ARE INTENDED TO BE A DIAGRAMMATIC OUTLINE ONLY UNLESS OTHERWISE NOTED. DIMENSIONS SHOWN ARE TO FINISH SURFACES UNLESS OTHERWISE NOTED. SPACING BETWEEN EQUIPMENT IS THE MINIMUM REQUIRED CLEARANCE. THEREFORE, IT IS CRITICAL TO FIELD VERIFY DIMENSIONS, SHOULD THERE BE ANY QUESTIONS REGARDING THE CONTRACT DOCUMENTS, THE CONTRACTOR SHALL BE RESPONSIBLE FOR OBTAINING A CLARIFICATION FROM THE ENGINEER PRIOR TO PROCEEDING WITH THE WORK. DETAILS ARE INTENDED TO SHOW DESIGN INTENT. MODIFICATIONS MAY BE REQUIRED TO SUIT JOB DIMENSIONS OR CONDITIONS AND SUCH MODIFICATIONS SHALL BE INCLUDED AS PART OF WORK AND PREPARED BY THE ENGINEER PRIOR TO PROCEEDING WITH WORK.
8. THE CONTRACTOR SHALL INSTALL ALL EQUIPMENT AND MATERIALS IN ACCORDANCE WITH MANUFACTURER'S RECOMMENDATIONS UNLESS SPECIFICALLY STATED OTHERWISE.
9. IF THE SPECIFIED EQUIPMENT CANNOT BE INSTALLED AS SHOWN ON THESE DRAWINGS, THE CONTRACTOR SHALL PROPOSE AN ALTERNATIVE INSTALLATION SPACE FOR APPROVAL BY THE ENGINEER PRIOR TO PROCEEDING.
10. GENERAL CONTRACTOR SHALL BE RESPONSIBLE FOR THE SAFETY OF WORK AREA, ADJACENT AREAS AND BUILDING OCCUPANTS THAT ARE LIKELY TO BE AFFECTED BY THE WORK UNDER THIS CONTRACT. WORK SHALL CONFIRM TO ALL OSHA REQUIREMENTS AND THE LOCAL JURISDICTION.
11. GENERAL CONTRACTOR SHALL COORDINATE WORK AND SCHEDULE WORK ACTIVITIES WITH OTHER DISCIPLINES.
12. ERECTION SHALL BE DONE IN A WORKMANLIKE MANNER BY COMPETENT EXPERIENCED WORKMAN IN ACCORDANCE WITH APPLICABLE CODES AND THE BEST ACCEPTED PRACTICE. ALL MEMBERS SHALL BE LAID PLUMB AND TRUE AS INDICATED ON THE DRAWINGS.
13. SEAL PENETRATIONS THROUGH FIRE RATED AREAS WITH UL LISTED MATERIALS APPROVED BY LOCAL JURISDICTION. CONTRACTOR SHALL KEEP AREA CLEAN, HAZARD FREE, AND DISPOSE OF ALL DEBRIS.
14. WORK PREVIOUSLY COMPLETED IS REPRESENTED BY LIGHT SHADED LINES AND NOTES. THE SCOPE OF WORK FOR THIS PROJECT IS REPRESENTED BY DARK SHADED LINES AND NOTES. CONTRACTOR SHALL NOTIFY THE GENERAL CONTRACTOR OF ANY EXISTING CONDITIONS THAT DEVIATE FROM THE DRAWINGS PRIOR TO BEGINNING CONSTRUCTION.
15. CONTRACTOR SHALL PROVIDE WRITTEN NOTICE TO THE CONSTRUCTION MANAGER 48 HOURS PRIOR TO COMMENCEMENT OF WORK.
16. THE CONTRACTOR SHALL PROTECT EXISTING IMPROVEMENTS, PAVEMENTS, CURBS, LANDSCAPING AND STRUCTURES. ANY DAMAGED PART SHALL BE REPAIRED AT CONTRACTOR'S EXPENSE TO THE SATISFACTION OF THE OWNER.
17. THE CONTRACTOR SHALL CONTACT UTILITY LOCATING SERVICES PRIOR TO THE START OF CONSTRUCTION.
18. GENERAL CONTRACTOR SHALL COORDINATE AND MAINTAIN ACCESS FOR ALL TRADES AND CONTRACTORS TO THE SITE AND/OR BUILDING.
19. THE GENERAL CONTRACTOR SHALL BE RESPONSIBLE FOR SECURITY OF THE SITE FOR THE DURATION OF CONSTRUCTION UNTIL JOB COMPLETION.
20. THE GENERAL CONTRACTOR SHALL MAINTAIN IN GOOD CONDITION ONE COMPLETE SET OF PLANS WITH ALL REVISIONS, ADDENDA, AND CHANGE ORDERS ON THE PREMISES AT ALL TIMES.
21. THE GENERAL CONTRACTOR SHALL PROVIDE PORTABLE FIRE EXTINGUISHERS WITH A RATING OF NOT LESS THAN 2–A OT 2–A:10–B:C AND SHALL BE WITHIN 25 FEET OF TRAVEL DISTANCE TO ALL PORTIONS OF WHERE THE WORK IS BEING COMPLETED DURING CONSTRUCTION.
22. ALL EXISTING ACTIVE SEWER, WATER, GAS, ELECTRIC, AND OTHER UTILITIES SHALL BE PROTECTED AT ALL TIMES, AND WHERE REQUIRED FOR THE PROPER EXECUTION OF THE WORK, SHALL BE RELOCATED AS DIRECTED BY THE ENGINEER. EXTREME CAUTION SHOULD BE USED BY THE CONTRACTOR WHEN EXCAVATING OR DRILLING PIERS AROUND OR NEAR UTILITIES. CONTRACTOR SHALL PROVIDE SAFETY TRAINING FOR THE WORKING CREW. THIS SHALL INCLUDE BUT NOT BE LIMITED TO A) FALL PROTECTION, B) CONFINED SPACE, C) ELECTRICAL SAFETY, AND D) TRENCHING & EXCAVATION.
23. ALL EXISTING INACTIVE SEWER, WATER, GAS, ELECTRIC, AND OTHER UTILITIES, WHICH INTERFERE WITH THE EXECUTION OF THE WORK, SHALL BE REMOVED, CAPPED, PLUGGED OR OTHERWISE DISCONNECTED AT POINTS WHICH WILL NOT INTERFERE WITH THE EXECUTION OF THE WORK, AS DIRECTED BY THE RESPONSIBLE ENGINEER, AND SUBJECT TO THE APPROVAL OF THE OWNER AND/OR LOCAL UTILITIES.
24. THE AREAS OF THE OWNER'S PROPERTY DISTURBED BY THE WORK AND NOT COVERED BY THE TOWER, EQUIPMENT OR DRIVEWAY, SHALL BE GRADED TO A UNIFORM SLOPE, AND STABILIZED TO PREVENT EROSION.
25. CONTRACTOR SHALL MINIMIZE DISTURBANCE TO THE EXISTING SITE DURING CONSTRUCTION. EROSION CONTROL MEASURES, IF REQUIRED DURING CONSTRUCTION, SHALL BE IN CONFORMANCE WITH THE FEDERAL AND LOCAL JURISDICTION FOR EROSION AND SEDIMENT CONTROL.
26. NO FILL OR EMBANKMENT MATERIAL SHALL BE PLACED ON FROZEN GROUNDING. FROZEN MATERIALS, SNOW OR ICE SHALL NOT BE PLACED IN ANY FILL OR EMBANKMENT.
27. THE SUBGRADE SHALL BE BROUGHT TO A SMOOTH UNIFORM GRADE AND COMPACTED TO 95 PERCENT STANDARD PROCTOR DENSITY UNDER PAVEMENT AND STRUCTURES AND 80 PERCENT STANDARD PROCTOR DENSITY IN OPEN SPACE. ALL TRENCHES IN PUBLIC RIGHT OF WAY SHALL BE BACKFILLED WITH FLOWABLE FILL OR OTHER MATERIAL PRE–APPROVED BY THE LOCAL JURISDICTION.
28. ALL NECESSARY RUBBISH, STUMPS, DEBRIS, STICKS, STONES, AND OTHER REFUSE SHALL BE REMOVED FROM THE SITE AND DISPOSED OF IN A LAWFUL MANNER.
29. ALL BROCHURES, OPERATING AND MAINTENANCE MANUALS, CATALOGS, SHOP DRAWINGS, AND OTHER DOCUMENTS SHALL BE TURNED OVER TO THE GENERAL CONTRACTOR AT COMPLETION OF CONSTRUCTION AND PRIOR TO PAYMENT.
30. CONTRACTOR SHALL SUBMIT A COMPLETE SET OF AS–BUILT REDLINES TO THE GENERAL CONTRACTOR UPON COMPLETION OF PROJECT AND PRIOR TO FINAL PAYMENT.
31. CONTRACTOR SHALL LEAVE PREMISES IN A CLEAN CONDITION.
32. THE PROPOSED FACILITY WILL BE UNMANNED AND DOES NOT REQUIRE POTABLE WATER OR SEWER SERVICE, AND IS NOT FOR HUMAN HABITAT (NO HANDICAP ACCESS REQUIRED).
33. OCCUPANCY IS LIMITED TO PERIODIC MAINTENANCE AND INSPECTION, APPROXIMATELY 2 TIMES PER MONTH, BY AT&T TECHNICIANS.
34. NO OUTDOOR STORAGE OR SOLID WASTE CONTAINERS ARE PROPOSED.
35. ALL MATERIAL SHALL BE FURNISHED AND WORK SHALL BE PERFORMED IN ACCORDANCE WITH THE LATEST REVISION AT&T MOBILITY GROUNDING STANDARD "TECHNICAL SPECIFICATION FOR CONSTRUCTION OF GSM/GPRS WIRELESS SITES" AND "TECHNICAL SPECIFICATION FOR FACILITY GROUNDING". IN CASE OF A CONFLICT BETWEEN THE CONSTRUCTION SPECIFICATION AND THE DRAWINGS, THE DRAWINGS SHALL GOVERN.
36. CONTRACTORS SHALL BE RESPONSIBLE FOR OBTAINING ALL PERMITS AND INSPECTIONS REQUIRED FOR CONSTRUCTION. IF CONTRACTOR CANNOT OBTAIN A PERMIT, THEY MUST NOTIFY THE GENERAL CONTRACTOR IMMEDIATELY.
37. CONTRACTOR SHALL REMOVE ALL TRASH AND DEBRIS FROM THE SITE ON A DAILY BASIS.
38. INFORMATION SHOWN ON THESE DRAWINGS WAS OBTAINED FROM SITE VISITS AND/OR DRAWINGS PROVIDED BY THE SITE OWNER. CONTRACTORS SHALL NOTIFY THE ENGINEER OF ANY DISCREPANCIES PRIOR TO ORDERING MATERIAL OR PROCEEDING WITH CONSTRUCTION.
39. NO WHITE STROBE LIGHTS ARE PERMITTED. LIGHTING IF REQUIRED, WILL MEET FAA STANDARDS AND REQUIREMENTS.
40. ALL COAXIAL CABLE INSTALLATIONS TO FOLLOW MANUFACTURER'S INSTRUCTIONS AND RECOMMENDATIONS.
41. CONTRACTOR WILL REFER TO LATEST RFDS SHEET PRIOR TO CONSTRUCTION COMMENCING.

GENERAL NOTES

APPLICANT/OWNER:

AT&T MOBILITY

16025 NORTHLAND DR
SOUTHFIELD, MI 48075

PREPARED BY:

BLACK & VEATCH

6800 W. 115TH ST, SUITE 2292
OVERLAND PARK, KANSAS 66211
(913) 458–2000

PROJECT NUMBER: 129391

STATE OF MICHIGAN
JOSHUA R. TURNER
No. 6201310514
LICENSED PROFESSIONAL ENGINEER
05/17/2022

IT IS A VIOLATION OF LAW FOR ANY PERSON, UNLESS THEY ARE ACTING UNDER THE DIRECTION OF A LICENSED PROFESSIONAL ENGINEER, TO ALTER THIS DOCUMENT.

LANDLORD/PROPERTY OWNER SIGNATURE

REV	DATE	DESCRIPTION
0	05.17.22	ISSUED FOR CONSTRUCTION

PROJECT LOCATION: USID (305880)

MI4740

40451 12 MILE ROAD
NOVI, MI 48377

DRAWING DESCRIPTION:

GENERAL NOTES

DRAWING NUMBER:

N-2

Diagram - Sector	D	Diagram File Name - MI4740_Sector_A_After.vsd					
Atoll Site Name -	DTL04740	Location Name -	DTL04740	Market -	DETROIT	Market Cluster -	MICHIGAN/INDIANA
Comments:							

MI4740_SECTOR_A_AFTER

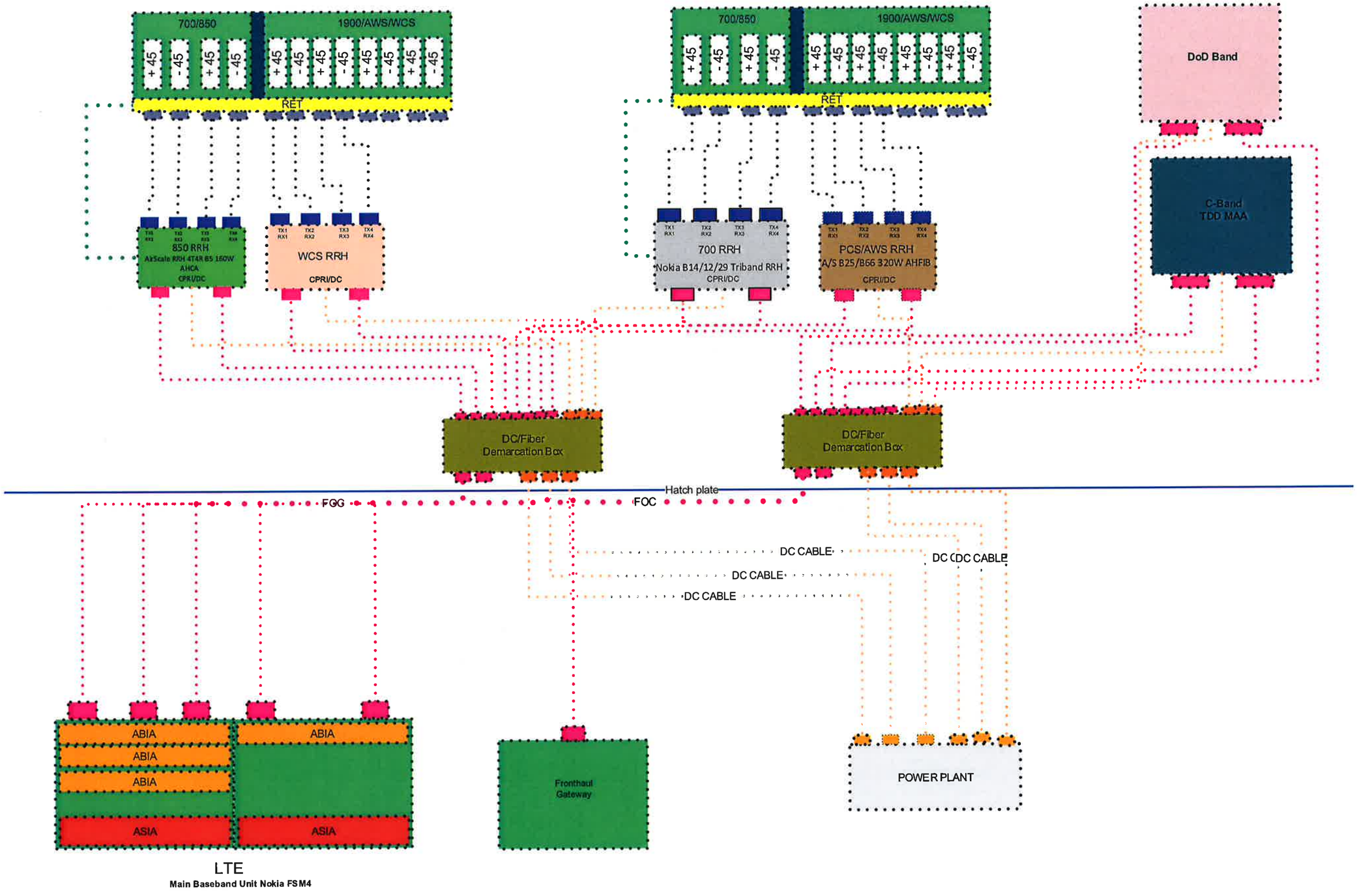

Diagram - Sector	E	Diagram File Name - MI4740_Sector_B_After.vsd					
Atoll Site Name -	DTL04740	Location Name -	DTL04740	Market -	DETROIT	Market Cluster -	MICHIGAN/INDIANA
Comments:							

MI4740_SECTOR_B_AFTER

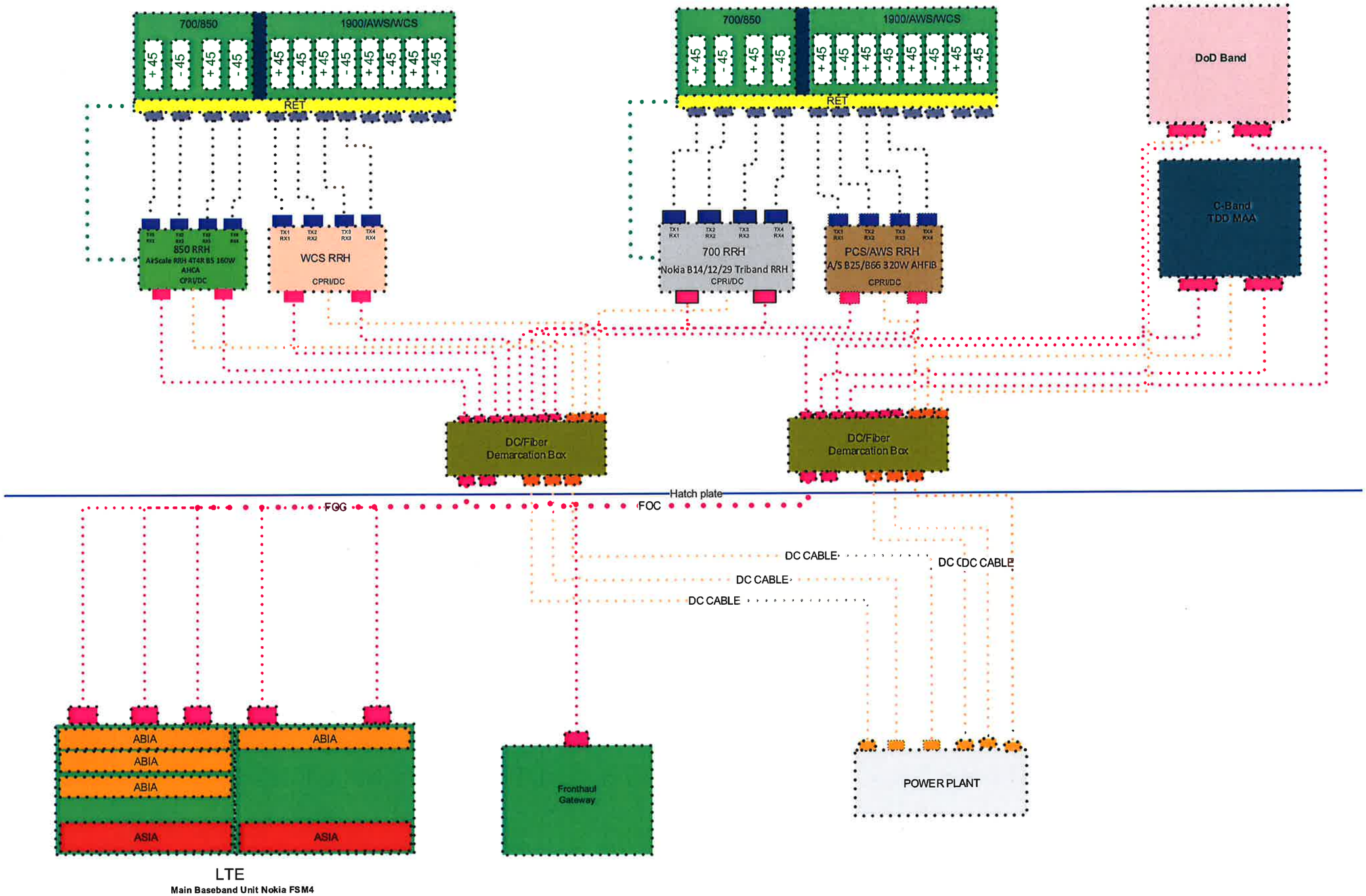

Diagram - Sector F | Diagram File Name - MI4740_Sector_C_After.vsd
Atoll Site Name - DTL04740 | Location Name - DTL04740 | Market - DETROIT | Market Cluster - MICHIGAN/INDIANA
Comments:
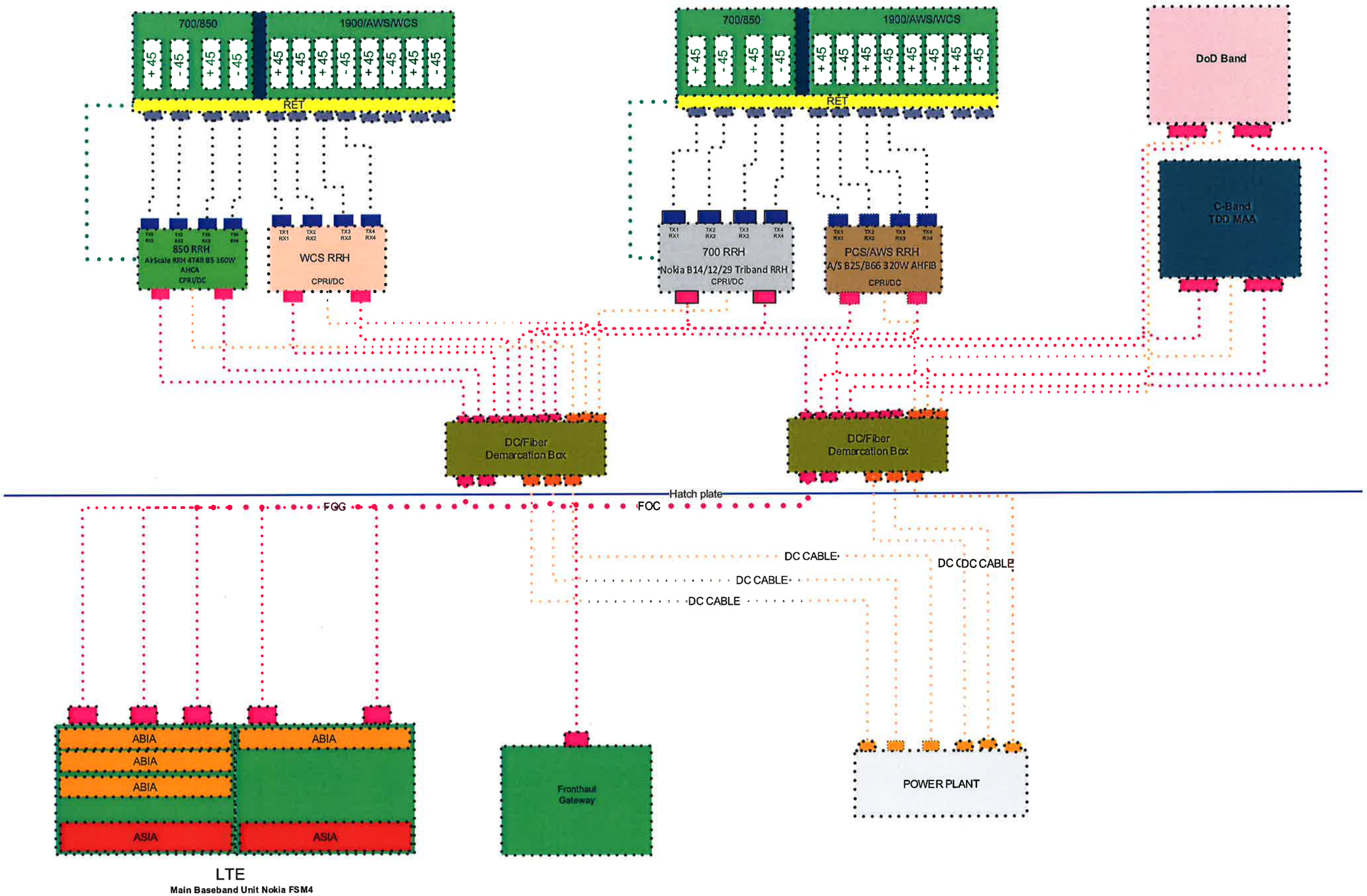
MI4740_SECTOR_C_AFTER