# TOWN OF LOS GATOS

**BUILDING INSPECTION DEPARTMENT - PHONE 354-6876**

## APPLICATION FOR BUILDING PERMIT

B 3441

FOR APPLICANT TO FILL IN

BUILDING ADDRESS: 249 L.G.B. LOS GATOS

LOT NO: | BLOCK: | TRACT:

SIZE OF LOT: | NO. OF BLDGS. NOW ON LOT: 1

USE OF EXISTING BLDG: YES RESIDE

OWNER: L. MOORE

MAIL ADDRESS: AS ABOVE

CITY: LOS GATOS | TEL. NO.

ARCHITECT OR ENGINEER: | TEL. NO.

ADDRESS:

CONTRACTOR: WOODS CONS. | TEL. NO. 353 1450

ADDRESS: 23251 SUMMIT RD LG

STATE LIC. NO. 221227 | CITY: LOS GATOS

### DESCRIPTION OF WORK

NEW | ADD ✓ | ALTER | REPAIR | DEMOLISH

SQ. FT. SIZE | NO. OF STORIES | NO. OF FAMILIES 1

USE OF STRUCTURE DESCRIPTION OF WORK: DORMER ADDED TO EXISTING ROOF LINE

$ 2,756.00 VALUATION

BLDG. 24.00

PLAN CHK.

SMI 50

TOTAL 24.50

I hereby acknowledge that I have read this application and state that the information given is correct. I agree to comply with all Town Ordinances and State Laws relating to building construction. I certify that I shall not commence work until I have obtained a building permit. I agree to conform to the provisions of the State of California Labor Code relating to Workmen's Compensation Insurance.

I HEREBY CERTIFY THAT I AM PROPERLY LICENSED OR THAT I AM EXEMPT FROM BEING LICENSED BY THE STATE OF CALIFORNIA CONTRACTOR'S LICENSE LAW

SIGNATURE OF PERMITTEE: Robert Woods

FOR

DATE REC'D | BY

P.C. NO. | P.C. FEE

### USE AND OCCUPANCY APPROVAL

BUILDING INSPECTOR (354-6878) — DATE / /

FIRE MARSHAL (354-6821) — DATE / /

PUBLIC WORKS (354-6863) — DATE / /

ISSUED BY (354-6872) PLANNING DIRECTOR — DATE / /

249 L.G. Blvd.

| FIRE ZONE | CONST. TYPE | GROUP | PROCESSED BY |
|---|---|---|---|
| 3 | V | I | WB |

| USE ZONE | SPECIAL CONDITIONS | VARIANCE # | USE PERMIT |
|---|---|---|---|
| R1 | none | | |

| BUILDING SETBACKS | FRONT | REAR | R. SIDE | L. SIDE |
|---|---|---|---|---|
| | EXISTING | | | |

### BUILDING PERMIT APPROVAL

| | | DATE |
|---|---|---|
| PLANNING DEPT. | | / / |
| FIRE MARSHAL | | / / |
| PUBLIC WORKS | | / / |
| ISSUED BY BUILDING INSPECTOR | R. W. | 11-3-76 |

### INSPECTION RECORD

| | | |
|---|---|---|
| | | |

VALIDATION

NOV 24 1976 5630 ** 0024.50

### APPROVALS

| | DATE | INSPECTOR'S SIG. |
|---|---|---|
| FOUNDATION LOCATION FORMS, MATERIALS | | |
| FRAME FIRE STOPS BRACING BOLTS | | |
| FURNACE LOCATION GAS VENT, DUCTS | | |
| LATH INT. | | |
| LATH EXT. | | |
| | | |
| LANDSCAPING PARKING AND GRADING | | |
| IMPROVEMENTS COMPLETED | 7-18-77 | WB |
| FINAL | | |

DISTRIBUTION

# TOWN OF LOS GATOS

BUILDING INSPECTION DEPARTMENT · PHONE 354-6876

APPLICATION FOR BUILDING PERMIT

B 3532

1

FOR APPLICANT TO FILL IN

BUILDING ADDRESS: 249 Los GATOS BLVD

DWELLING

J. MOORE

AS ABOVE

Los GATOS

Woods Cons 3331450

23229 Summit Rd

Los Gatos

DESCRIPTION OF WORK

Replace old Deck and staircase with new materials

875.00

TOTAL

249 Los Gatos

BUILDING PERMIT APPROVAL DATE

INSPECTION RECORD

VALIDATION

MAR 31 '93 2961 • 0009.50

USE AND OCCUPANCY APPROVAL

APPROVALS

| | DATE | INSPECTOR'S INITIALS |
|---|---|---|
| FOUNDATION LOCATION FORMS MATERIALS | | |
| FRAME FIRE STOPS BRACING BOLTS | | |
| FURNACE LOCATION SAFETY DUCTS | | |
| LATH INT | | |
| LATH EXT | | |
| | | |
| LANDSCAPING PARKING AND GRADING | | |
| IMPROVEMENTS COMPLETED | | |
| FINAL | 3-31-93 | |

DISTRIBUTION

249 Los Gatos

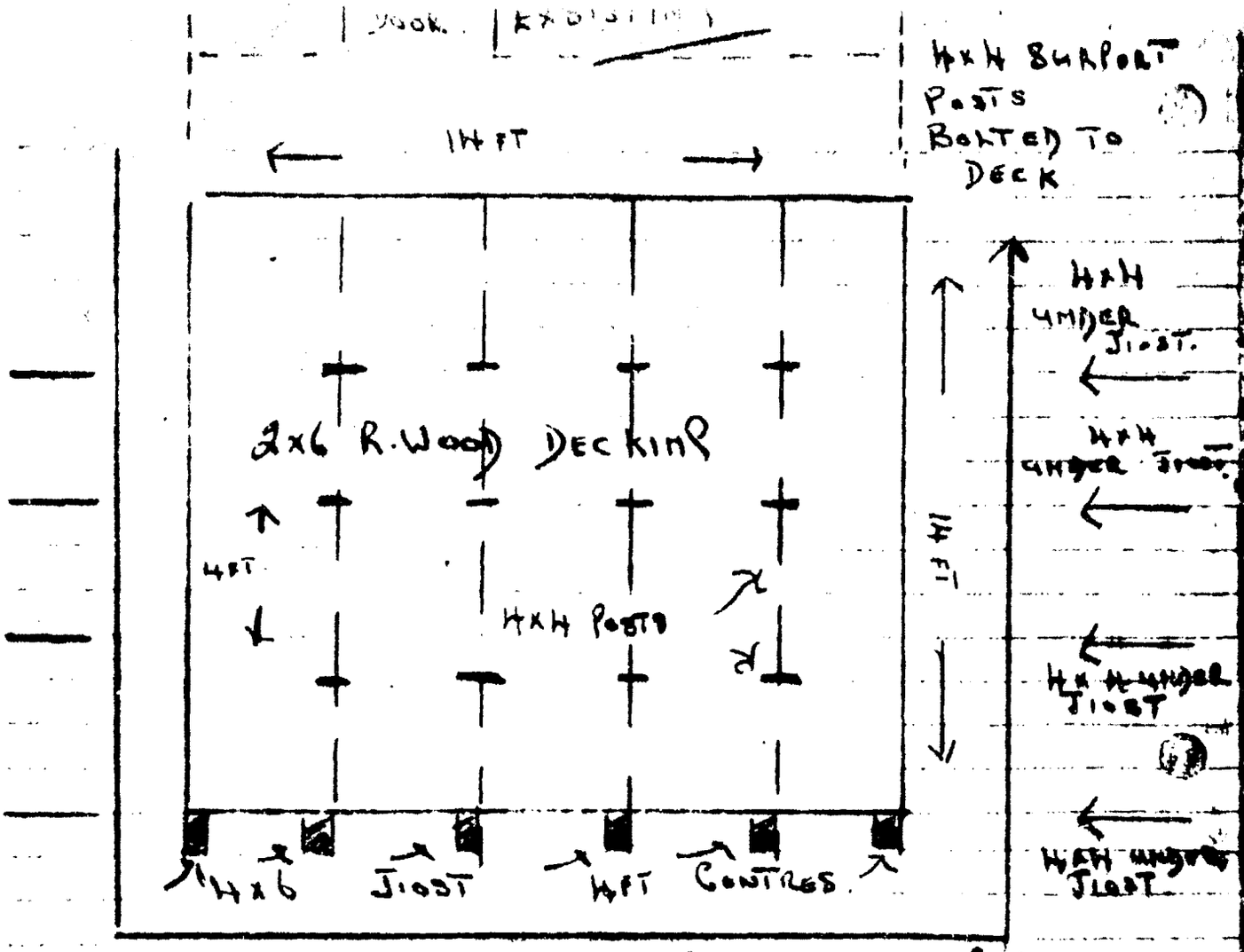


DECK SITS ON EXSISTING FLAT ROOF. EXSISTING ROOF CONSISTS OF 4x8 BEAMS WITH 2x6 T.G NOTTY PINE 4x8 ON 4FT CENTRES.
DECK STRENGHT AND SUPPORT TAKEN UP BY OUTSIDE WALL OF HOWER ROOM.
DISTANCE BETWEEN FLAT ROOF AND DECK 2FT.
GROUND TO DECK 12FT.
STIARCASE 2x12 STRINGERS REDWOOD
TREADS & RISERS 2x12 + 2x6
STIARCASE SUPPORTED FROM CONCRETE POD TO STRINGERS BY 4x4 R.WOOD POSTS.

249 LOS GATOS BLVD

AA

3/31/77

**TOWN of LOS GATOS**

CIVIC CENTER • 110 EAST MAIN STREET • P.O. BOX 949 • LOS GATOS, CALIFORNIA 95031

# SECONDARY DWELLING UNIT PERMIT

GRANTED TO: JOHN AND MAXINE MOORE

PROPERTY OWNER AT: 249 LOS GATOS BLVD.

PURSUANT TO CHAPTER 3.96 OF THE LOS GATOS ZONING ORDINANCE, APPROVAL IS GRANTED SUBJECT TO CONDITIONS FOR AN EXISTING SECONDARY DWELLING UNIT LOCATED AT, AND DESCRIBED AS FOLLOWS:

APN: 529-24-022

THIS APPROVAL IS SUBJECT TO THE COMPLETION OF CONDITIONS ATTACHED TO THIS PERMIT AS REQUIRED BY THE BUILDING OFFICIAL AND THE TOWN OF LOS GATOS. FAILURE TO COMPLETE ANY OF THESE CONDITIONS WITHIN THEIR RESPECTIVE TIME FRAMES, MAY RESULT IN THE REVOCATION OF THE SECONDARY DWELLING UNIT PERMIT.

DATE ISSUED: DECEMBER 20, 1985

ALL CONDITIONS MUST BE COMPLETED WITHIN 30 DAYS UNLESS SPECIFIED OTHERWISE.

| | APPROVAL DATE |
|---|---|
| AFFIDAVIT FILED WITH PLANNING DIRECTOR. | 1-14-86 |
| DECLARATION OF RESTRICTION FILED WITH PLANNING DIRECTOR | 1-14-86 |
| APPROPRIATE BUILDING PERMITS FILED WITH BUILDING OFFICIAL | N/A |

FINAL APPROVAL: JANUARY 15, 1986

PLANNING DIRECTOR

BUILDING OFFICIAL

TOWN of LOS GATOS
P.O. BOX 949
LOS GATOS, CALIFORNIA 95030

BUILDING DEPARTMENT

December 12, 1985

John and Maxine Moore
P. O. Box 2217
Los Gatos, California 95031

RE: Secondary Unit, 249 Los Gatos Boulevard APN# 529-24-022

In response to your application, an inspection was made to determine requirements for approval of an existing secondary dwelling unit as provided in Section 3.96.010 of the Town Zoning Ordinance.

Attached is the Building Department's report indicating code corrections required for approval. Most correction work will require permits from the Building Department; application for permits may be made through that Department. Further, all corrections will require a final inspection.

Any interested person may appeal to the Board of Appeals from any decision of the Building Official. A request for an appeal must be made in writing to the Town Clerk within thirty days.

In addition, it is required that a deed restriction and/or affidavit be recorded with the County Assessor concerning owner occupancy of one of the dwelling units on the property. Once building permit requirements have been finalized, see Kirk Heinrichs in the Planning Department.

Sincerely,

Archie Watson

Archie Watson
Building Official

AW:sam
cc: Kirk Heinrichs, Planning Department
Encl.

| | | |
|---|---|---|
| CALCULATED BY [illegible] | **STEVEN A. ARNOLD**<br>Civil Engineer<br>1671 The Alameda Suite 305<br>SAN JOSE, CALIFORNIA 95126 | JOB NO. 22499 |
| CHECKED BY [illegible] | | DATE 12/23/[illegible] |
| SIGNED BY [illegible] | | PAGE 1 OF 12 |
| RCE NO. 22301 | PROJECT [illegible] | |

[illegible]

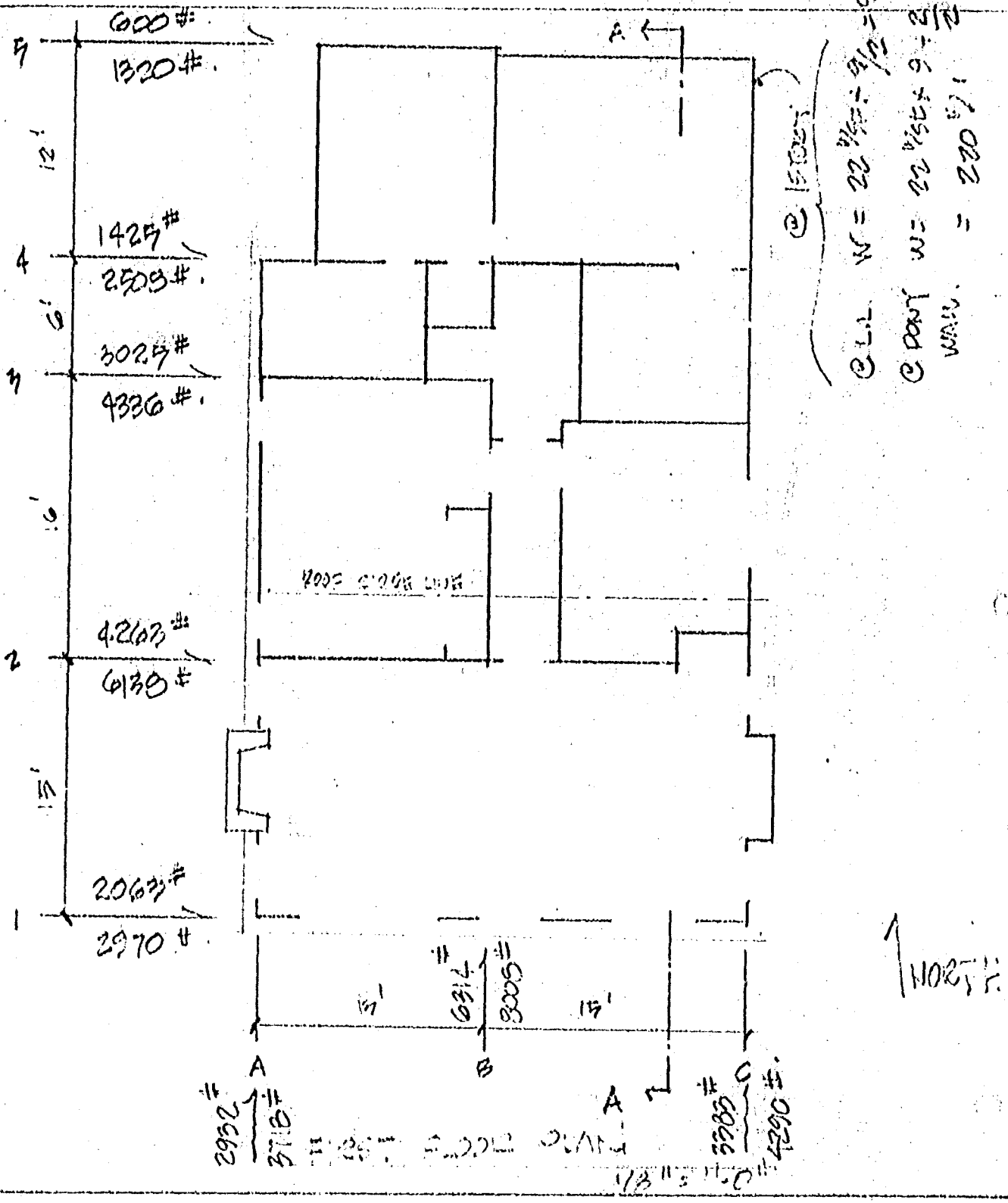

| CALCULATED BY BWS<br>CHECKED BY SAA<br>SIGNED BY "<br>RCE NO. 22301 | STEVEN A. ARNOLD<br>Civil Engineer<br>1671 The Alameda Suite 305<br>SAN JOSE, CALIFORNIA 95126<br>PROJECT 140715 | JOB NO. 22499<br>DATE 12/29/99<br>PAGE 2 OF 12 |
|---|---|---|

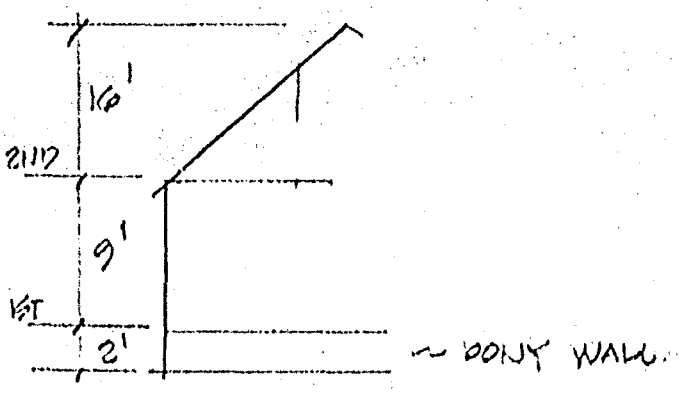


TYPICAL SECTION.

NORTH SOUTH DIRECTION, @ LOWER LEVEL WALLS.

BY INSPECTION WIND GOVERNS.

$W = 22\ \#/SF \times 16' + \frac{9'}{2} = 451\ \#/'$

@ LINE A.

$V_A = 451 \times \frac{12}{2} = 2706\ \#$

@ LINE B.

$V_B = 451 \times \frac{28}{2} = 6314\ \#$

@ C

$V_C = 451 \times \frac{15}{2} = 3383\ \#$

| | | |
|---|---|---|
| CALCULATED BY RWS<br>CHECKED BY SAA<br>SIGNED BY "<br>RCE NO. 22301 | **STEVEN A. ARNOLD**<br>Civil Engineer<br>1671 The Alameda Suite 305<br>SAN JOSE, CALIFORNIA 95126<br>PROJECT MOORE | JOB NO. 22499<br>DATE 12/29/89<br>PAGE 7 OF 12 |

EAST WEST DIRECTION.

BY INSPECTION WIND GOVERNS. @ LOWER LEVEL WALL.

$W = 22\,\#/ft^2 \times \frac{16'}{2} \times \frac{9'}{2} = 279\,\#/'$

$V_1 = 279 \times \frac{15'}{2} = 2092\#.$

$V_2 = 279 \times \frac{16+15}{2} = 4263\#.$

$V_3 = 279 \times \frac{16+6}{2} = 2925\#.$

$V_4 = 275\,\#/' \times \frac{6'}{2} + 100\,\#/' \times 12'/2 = 1425\#.$

$V_5 = 100 \times \frac{12}{2} = 600\#$

NORTH SOUTH DIRECTION @ BOXY WALLS.

$W = 22\,\#/ft^2 \times 16' + 9' + \frac{2'}{2} = 572\,\#/'$

$V_A = 572 \times \frac{13}{2} = 3718\#.$

$V_B = 572 \times \frac{23}{2} = 8003\#.$

| | | |
|---|---|---|
| CALCULATED BY DWG<br>CHECKED BY SAA<br>SIGNED BY<br>RCE NO. 22301 | STEVEN A. ARNOLD<br>Civil Engineer<br>1671 The Alameda Suite 305<br>SAN JOSE, CALIFORNIA 95126<br>PROJECT MOORE | JOB NO. 22489<br>DATE 12/29/89<br>PAGE 4 OF 13 |

C C.

$V_C = 572 \times \frac{15'}{2} =$

EAST WEST DIRECTION, C FONY WALLS.

$w = 22\,\#/ft \times \left(\frac{16'}{2} + 9' + \frac{2'}{2}\right) = 396\,\#/'$

$V_1 = \frac{396 \times 15}{2} = 2970\,\#.$

$V_2 = 396 \times \frac{15 + 16}{2} = 6138\,\#.$

$V_3 = 396 \times \frac{16 + 6}{2} = 4356\,\#$

$V_4 = 396 \times \frac{6}{2} + 220 \times \frac{12}{2} = 2509\,\#.$

$V_5 = 220 \times \frac{12}{2} = 1320\,\#$

RED

Block ____ Parcel No. ____

# ATC-20 Detailed Evaluation Safety Assessment Form

**BUILDING DESCRIPTION:**

Name: ____

Address: 219 Ron Bales Blvd

No. of Stories: 2

Basement: Yes ☐ No ☐ Unknown ☒

Approximate Age: 60+ Years

Approximate Area: 2000 ? Square feet

**Structural System:**

Wood Frame ☒ Unreinforced Masonry ☐

Reinforced Masonry ☐ Tilt-up ☐

Concrete Frame ☐ Concrete Shear Wall ☐

Steel Frame ☐ Other ____

**Primary Occupancy:** 4 units? (maybe 2 units)

Dwelling ☒ Other Residential ☒ Commercial ☐

Office ☐ Industrial ☐ Public Assembly ☐

School ☐ Government ☐ Emer. Serv. ☐

Historic ☐ Other ____

**OVERALL RATING:** *(Check One)*

INSPECTED (Green) ☐

LIMITED ENTRY (Yellow) ☐

UNSAFE (Red) ☒

**INSPECTOR:**

Inspector ID McDonald / Kang / Johnson

Affiliation ____

**INSPECTION DATE:**

Mo/day/year 10/20/89

Time 12:05 am (pm)

Has one whole service level (2) mil. broken

**Instructions:** Complete building evaluation and checklist on next page and then summarize results below.

| Posting: | *Existing* | *Recommended* |
|---|---|---|
| None | ☐ | |
| Inspected *(Green)* | ☐ | ☐ |
| Limited Entry *(Yellow)* | ☐ | ☐ |
| Unsafe *(Red)* | ☒ | ☒ |

Posted at this Assessment: ☒ Yes ☒ No

Existing posting by: Lloyd Crowder

**Recommendations:**

☐ No further action required

☒ Engineering Evaluation required (circle one) Structural Geotechnical Other ____

☐ Barricades needed in the following areas: ____

☐ Other *(falling hazard removal, shoring/bracing required, etc.)*: ____

**Comments** *(Why posted Unsafe, etc.)*:

Building displaced 12" and moved over longitudinally

1/16" gone!

Unsafe entry 2 floors

Has anchor bolts but cracks all around, has failed

*Sheet* ____ *of* ____



and inspection conferencing and notes

| | | |
|---|---|---|
| CALCULATED BY BWS<br>CHECKED BY SAA<br>SIGNED BY "<br>RCE NO. 22301 | **STEVEN A. ARNOLD**<br>**Civil Engineer**<br>1671 The Alameda Suite 305<br>SAN JOSE, CALIFORNIA 95126<br>PROJECT MOORE | JOB NO. 22489<br>DATE 12/28/89<br>PAGE 0 OF 13 |

STRUCTURAL CALCULATIONS
FOR EARTHQUAKE DAMAGE
REPAIR FOR THE MOORE
RESIDENCE AT
249 LOS GATOS BLVD.
LOS GATOS, CALIFORNIA.

Town of Los Gatos
BUILDING DEPARTMENT
APPROVED
By 2/2/90

CERTIFICATE EXPIRES
9-30-93

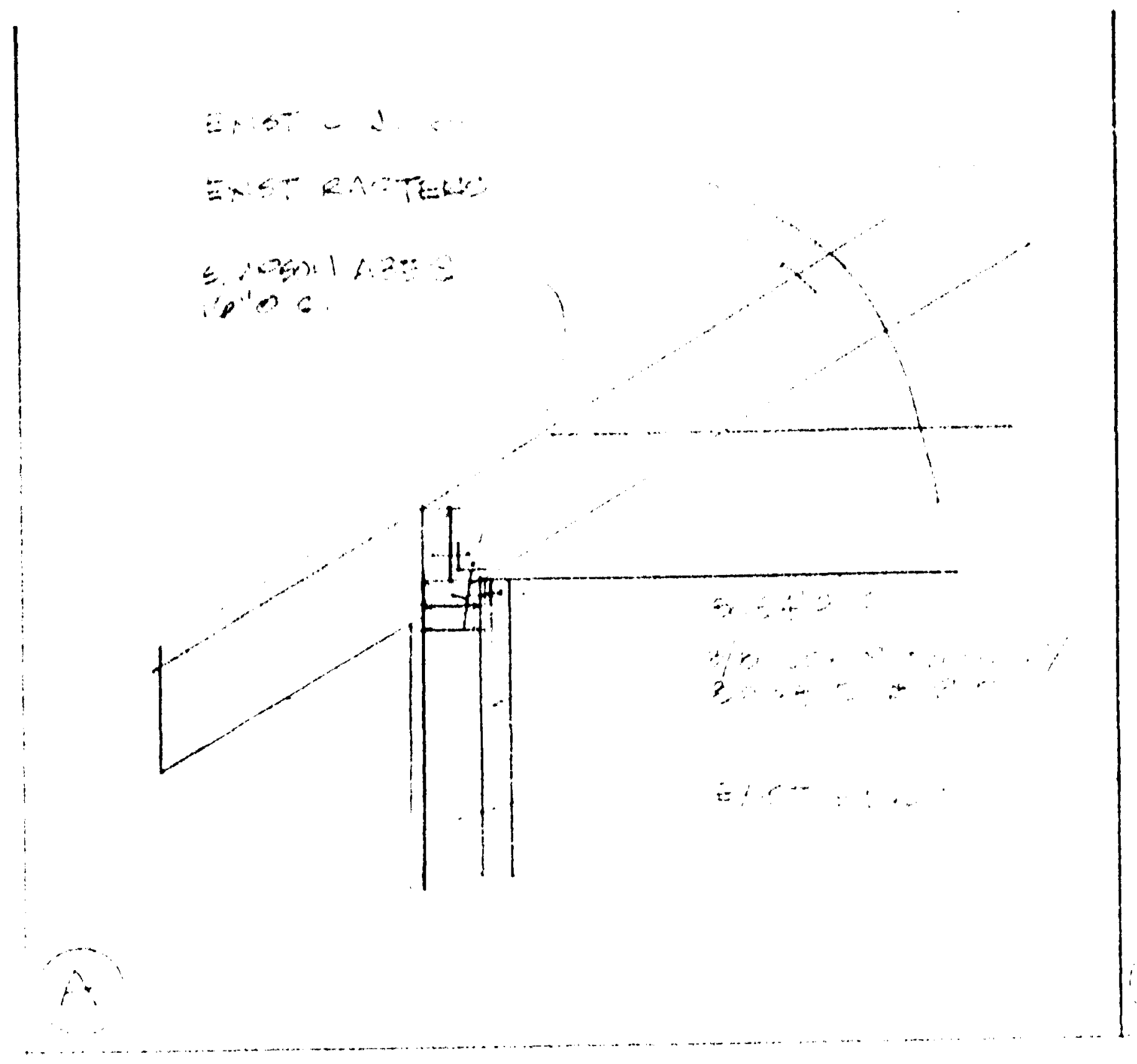

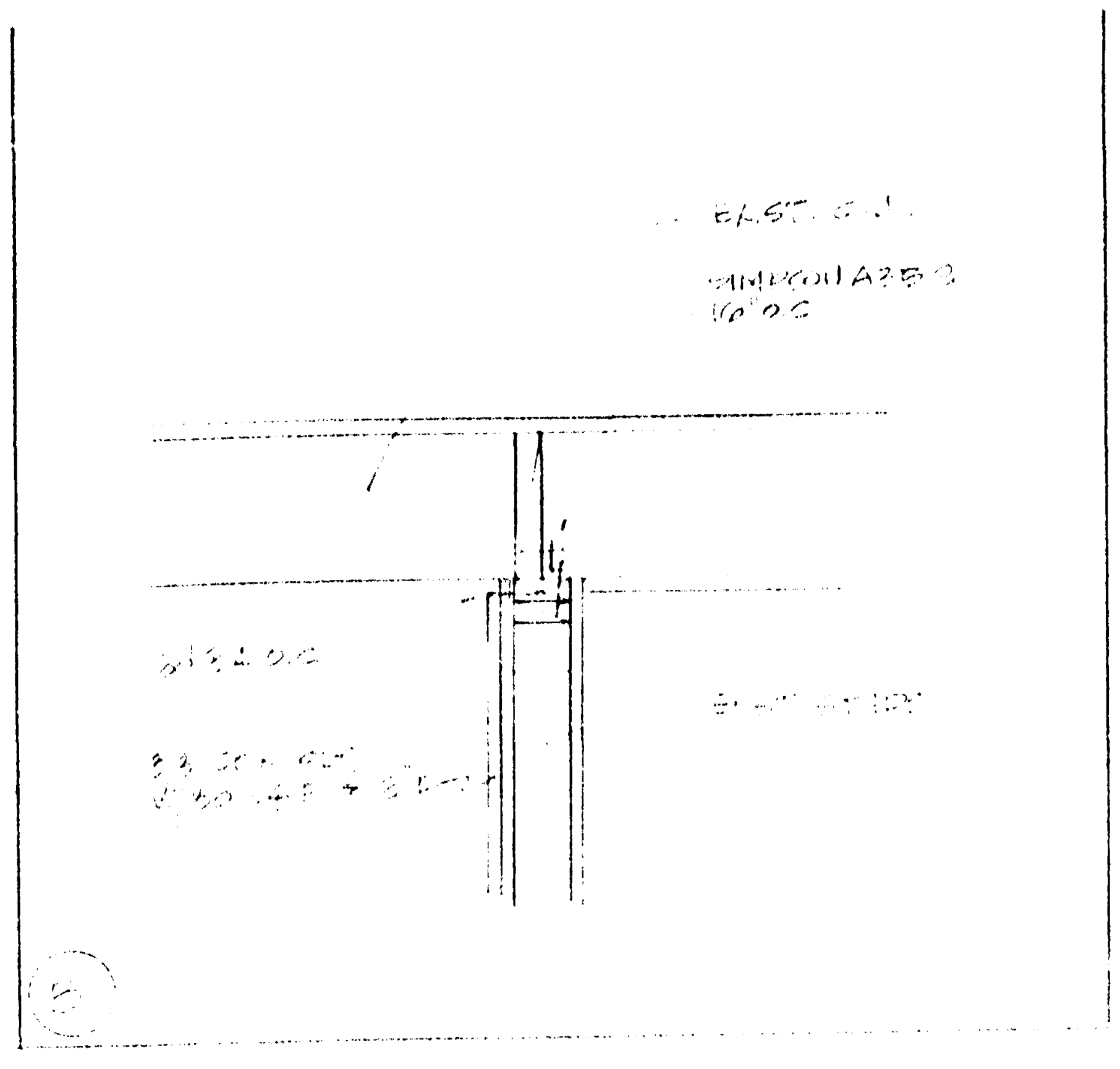

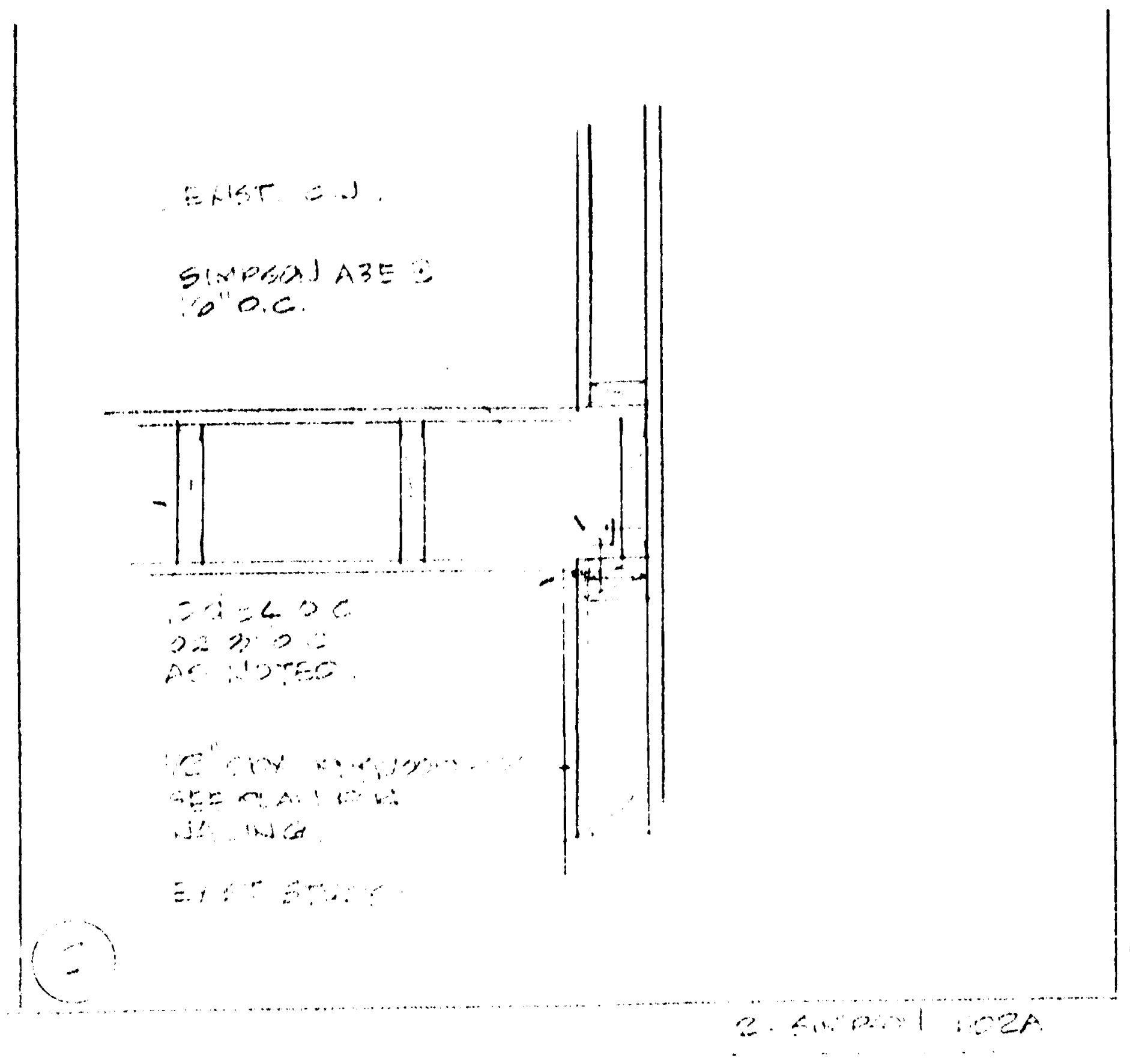

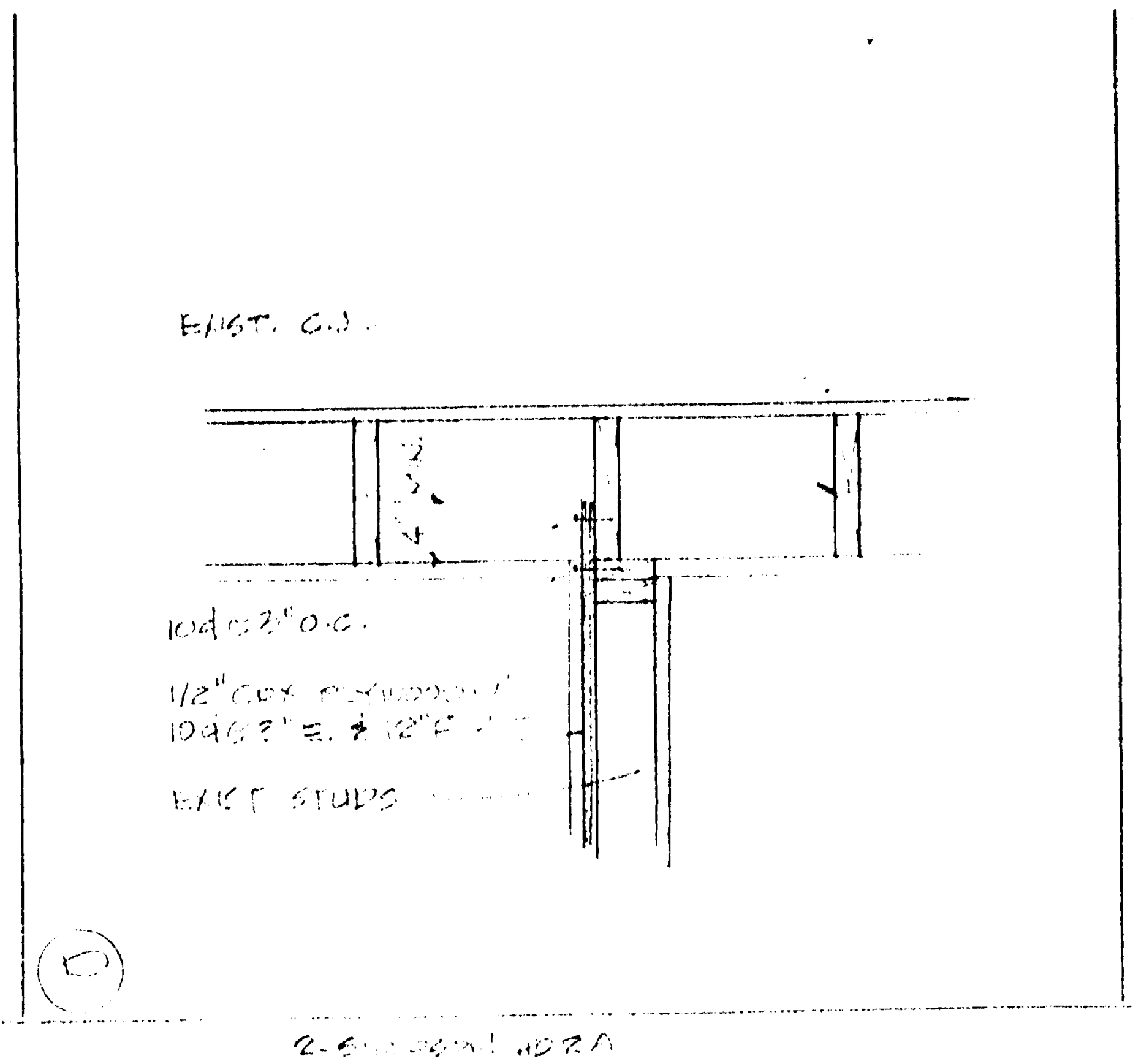

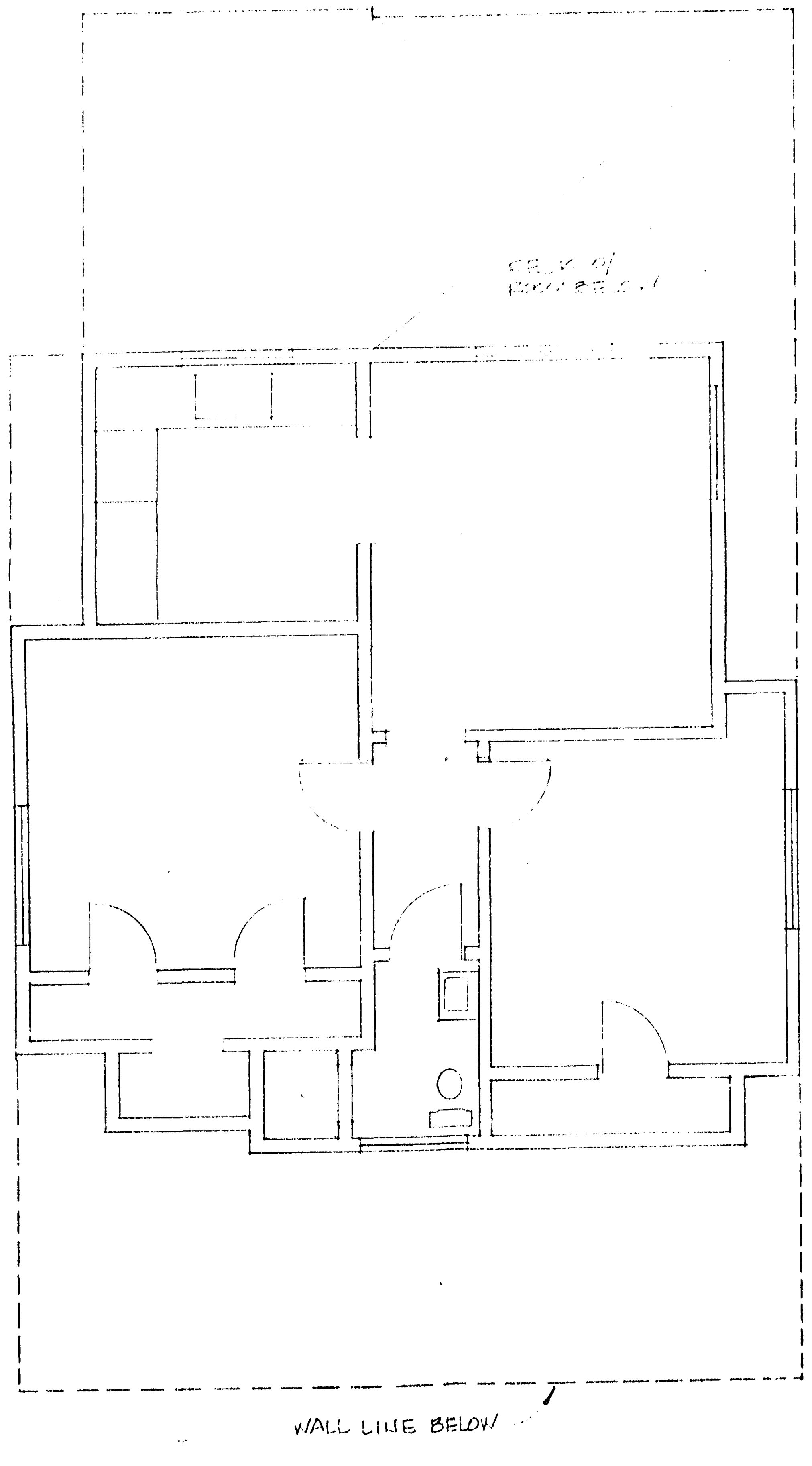

## SECOND FLOOR PLAN

SCALE - 1/4" = 1'-0"

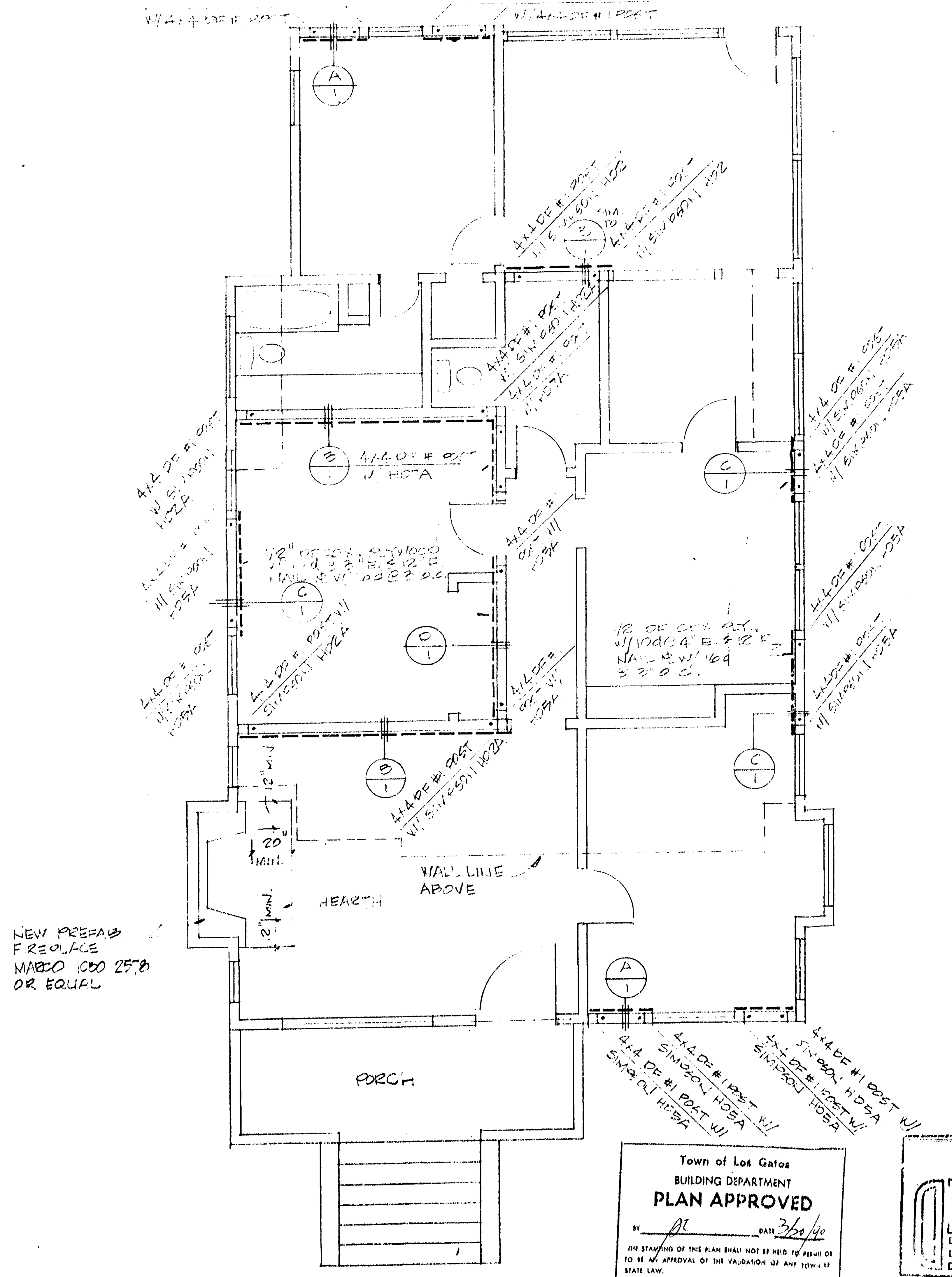

## FIRST FLOOR PLAN

SCALE - 1/4" = 1'-0"

PLANNING DEPARTMENT
APPROVED
HAS BEEN APPROVED AS
APPLICATION TO
OR TO WHAT
MAY REQUIRE A SEPARATE
Kirk
2-19-90

LEGEND

| | |
|---|---|
| — — — — | 3/8" D.F. CDX PLYWOOD W/ 8d @ 4" E. & 12" F. NAIL SILL PLATE W/ 16d @ 4" O.C. UNLESS NOTED OTHERWISE |

Town of Los Gatos
BUILDING DEPARTMENT
PLAN APPROVED
BY ____ DATE 3/20/90
THE STAMPING OF THIS PLAN SHALL NOT BE HELD TO PERMIT OR TO BE AN APPROVAL OF THE VIOLATION OF ANY TOWN OR STATE LAW.

TOWN OF LOS GATOS
BUILDING DEPARTMENT
RECEIVED
MAR 16 1990
BY

CERTIFICATE EXPIRES
9-30-93

REVISIONS

FLOOR PLANS & SITE PLAN

| Date | | Sheet |
|---|---|---|
| 2.26 .989 | **STEVEN ARNOLD**<br>CIVIL ENGINEER<br>1671 The Alameda, Suite 305 San Jose California 95126<br>(408) 286-9111<br>APPROVED:<br>STEVEN A. ARNOLD RCE 22301 | 1 of 2 |
| Scale 1/4" = 1' | | Job No. |

FOUNDATION PLAN
FOR THE MOORE RESIDENCE
249 LOS GATOS BLVD.
LOS GATOS, CALIFORNIA

SHEET NO.
1
OF 2

22480

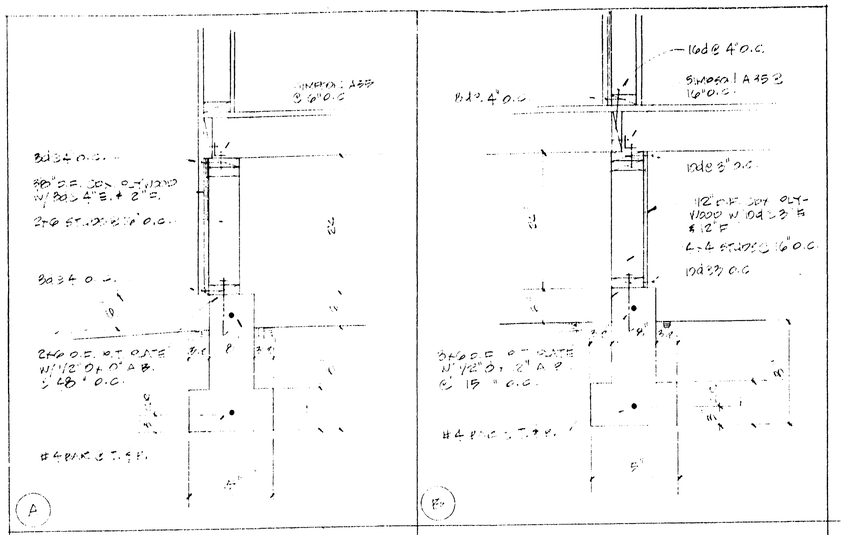





## STRUCTURAL SPECIFICATIONS

1. All work to be in conformance with UBC 1985 edition.
2. Foundation & Concrete: (Minimum footing depth 18" below natural grade).
   A. Basis for design: F'c = 2000 PSI/use 5 sack mix.
   B. All concrete shall be reinforced.
   C. Concrete shall be machine mixed and delivered in accordance with ASTM C-94. Submit mix designs to engineer for approval prior to pouring concrete.
   D. Backfill shall be placed in layers not to exceed 6" layers and shall be moistened and thoroughly compacted prior to placing next layer.
3. Steel Reinforcement:
   A. Conforming to ASTM A-615 grade 40
   B. Reinforcement to be continuous, stagger splices in adjacent bars, min. lap 30 bar diameters.
   C. Hold reinforcement in its true horizontal and vertical position with devices sufficiently numerous to prevent displacement.
4. Carpentry:
   A. Glu-Lams: Douglas Fir in accordance WCLA PS 56-73 standard specs. Combination symbol 22F-V3, DF/DF, end seal, protect from moisture at all times. Provide AITC Certificate.
   B. Plywood unless otherwise noted: At floors, 3/4" Douglas Fir CDX, T & G, Structural II, glue and nail, 10d @ 6"E, 10"F.
   C. Bolts: Drill holes 1/16" oversized. Use standard malleable iron washers and nuts or heads against wood.
   D. Metal Anchors: Simpson or approved equal/use connectors as specified in latest Simpson catalog.
5. Project engineer shall inspect rough framing.
6. Beams/ledgers/plates/headers to be DF #1
   Joists to be DF#2
   Studs to be construction grade or better

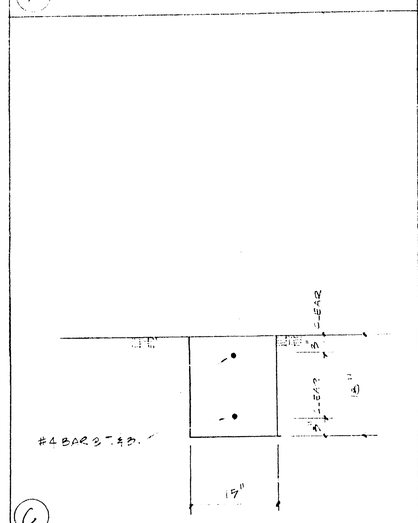


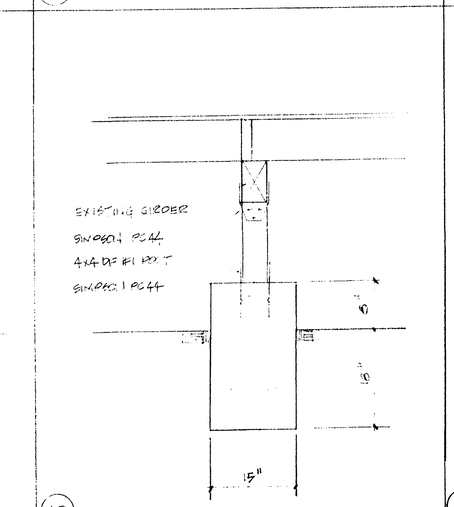


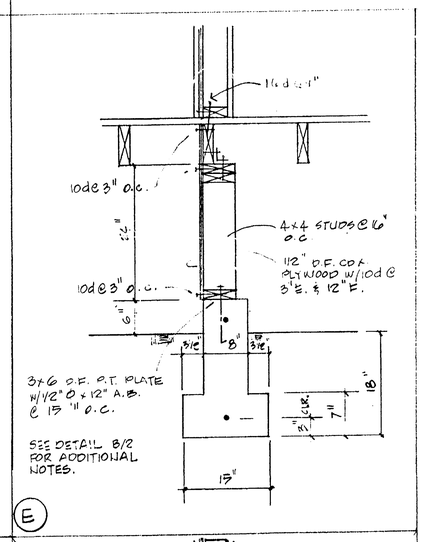


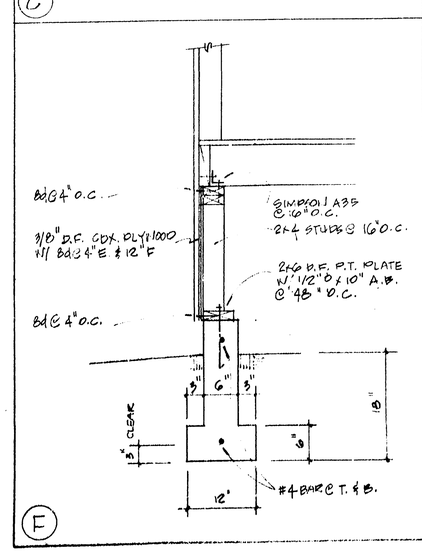


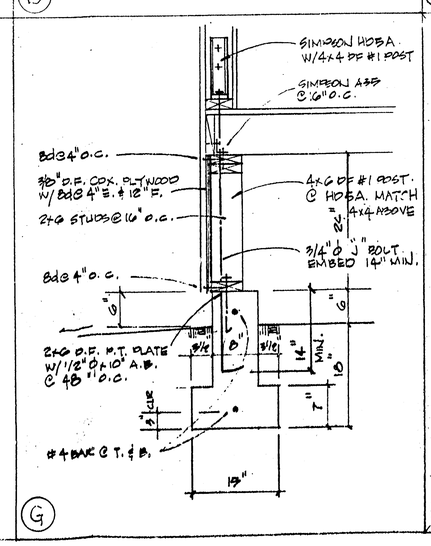


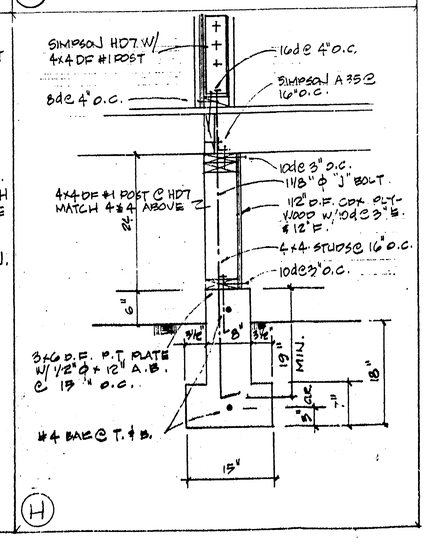


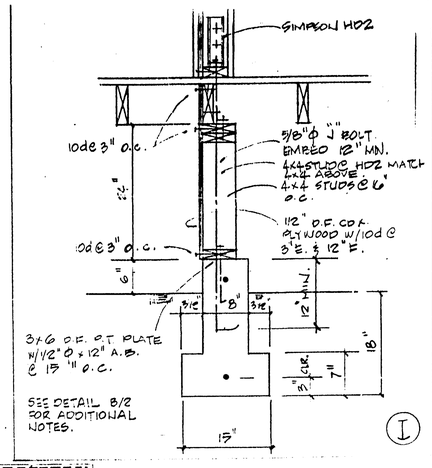


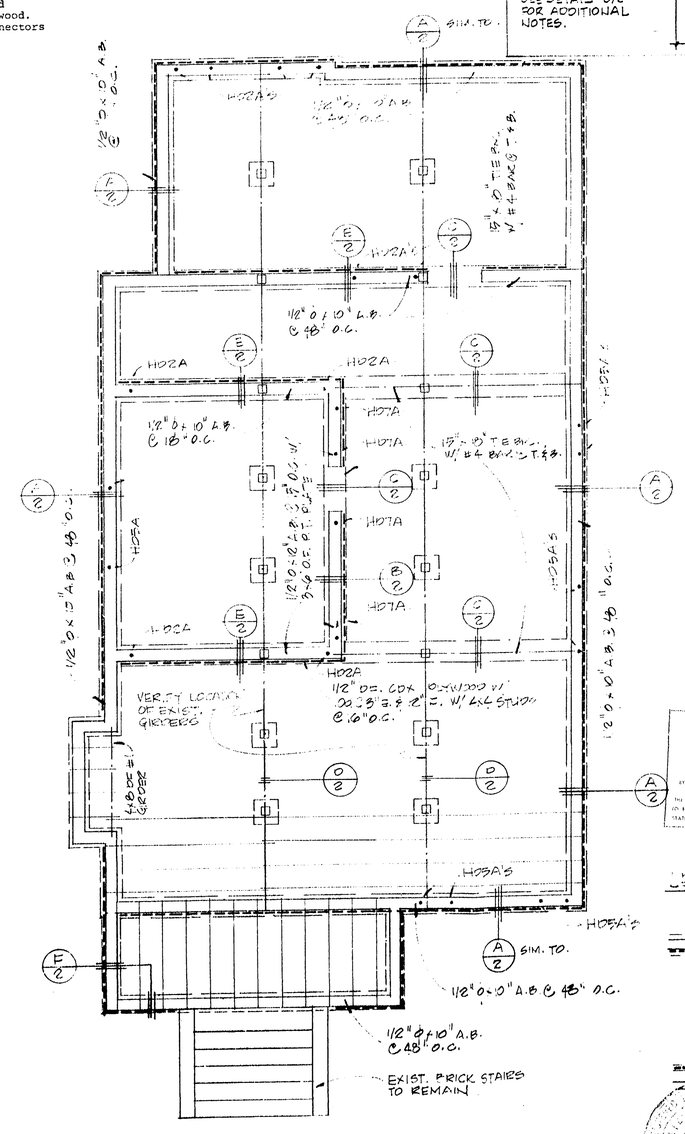


FOUNDATION PLAN

SCALE - 1/4" = 1'-0"

Town of Los Gatos
BUILDING DEPARTMENT
PLAN APPROVED
DATE 3-30-90

THE GRANTING OF THIS PLAN CHECK DOES NOT PERMIT THE VIOLATION OF ANY PROVISION OF THE UBC OR OTHER STATE LAW.

## LEGEND :

DENOTES POWER WALL SHEAR PLY. 3/8" D.F. COX W/ 8d @ 4" E. & 12" F. UNLESS NOTED OTHERWISE.

DENOTES SIMPSON HD HOLDOWN. HD2A, HDSA02, HD7A AS NOTED SEE DETAILS G, H, & I/2

CERTIFICATE EXPIRES 9-30-93

FOUNDATION PLAN FOR THE MOORE RESIDENCE 249 LOS GATOS BLVD. LOS GATOS, CALIFORNIA


STEVEN ARNOLD
CIVIL ENGINEER
1071 The Alameda, Suite 305 San Jose California 95126
(408) 286-9111
APPROVED: STEVEN A. ARNOLD RCE 23201


| Date | Scale | Sheet | Job No. |
|---|---|---|---|
| 12/26 | 1/4" = 1'-0" | 2 of 2 | 88-22 |

SHEET NO 2 OF 2

22488

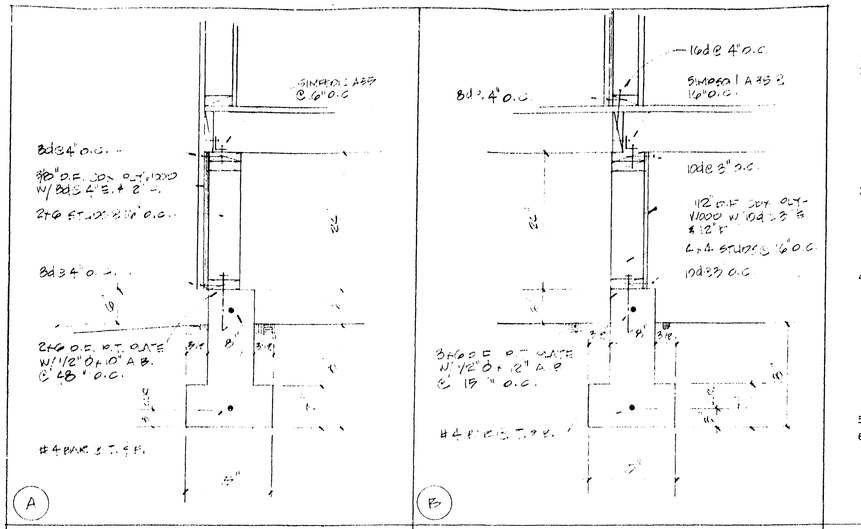


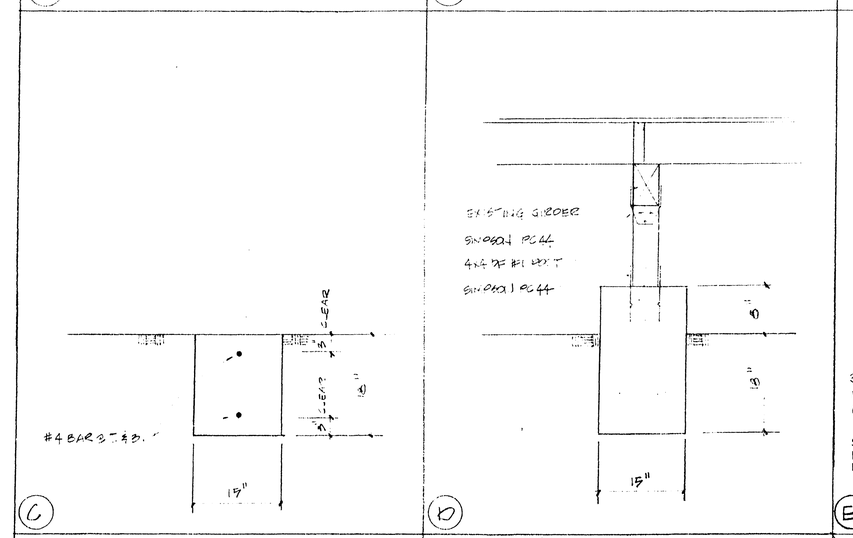


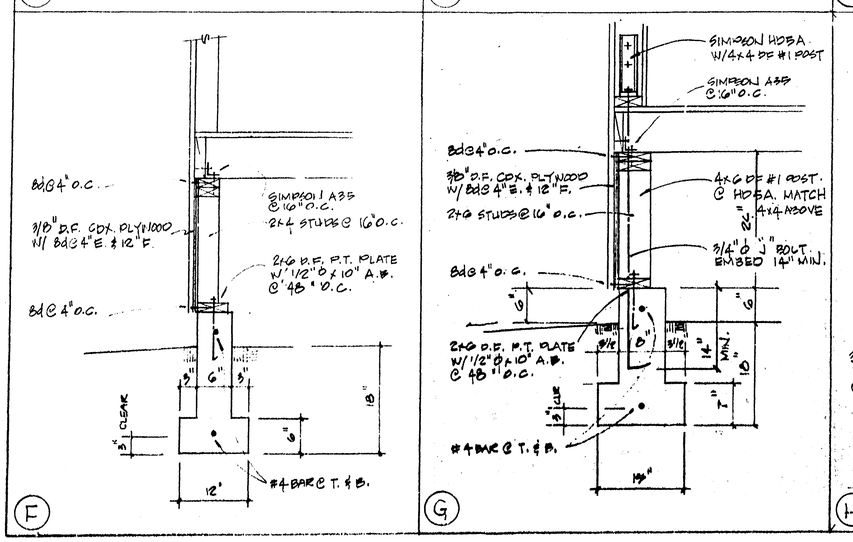


STRUCTURAL SPECIFICATIONS

1. All work to be in conformance with UBC 1985 edition.
2. Foundation & Concrete: (Minimum footing depth 18" below natural grade).
   A. Basis for design: F'c = 2000 PSI/use 5 sack mix.
   B. All concrete shall be reinforced.
   C. Concrete shall be machine mixed and delivered in accordance with ASTM C-94. Submit mix designs to engineer for approval prior to pouring concrete.
   D. Backfill shall be placed in layers not to exceed 6" layers and shall be moistened and thoroughly compacted prior to placing next layer.
3. Steel Reinforcement:
   A. Conforming to ASTM A-615 grade 40
   B. Reinforcement to be continuous, stagger splices in adjacent bars, min. lap 30 bar diameters.
   C. Hold reinforcement in its true horizontal and vertical position with devices sufficiently numerous to prevent displacement.
4. Carpentry:
   A. Glu-Lams: Douglas Fir in accordance WCLA PS 56-73 standard specs. Combination symbol 22F-V3, DF/DF, end seal, protect from moisture at all times. Provide AITC Certificate.
   B. Plywood unless otherwise noted: At floors, 3/4" Douglas Fir CDX, T & G, Structural II, glue and nail, 10d @ 6"E, 10"F.
   C. Bolts: Drill holes 1/16" oversized. Use standard malleable iron washers and nuts or heads against wood.
   D. Metal Anchors: Simpson or approved equal/use connectors as specified in latest Simpson catalog.
5. Project engineer shall inspect rough framing.
6. Beams/ledgers/plates/headers to be DF #1
   Joist: to be DF#2
   Studs to be construction grade or better

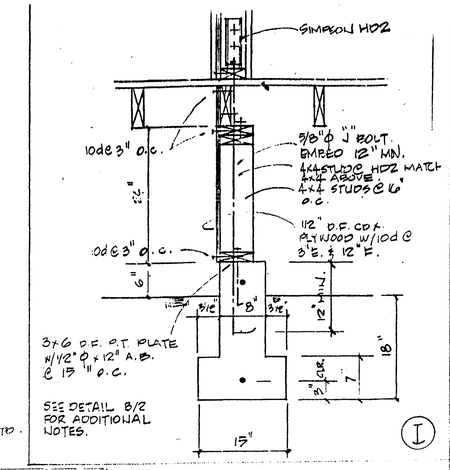


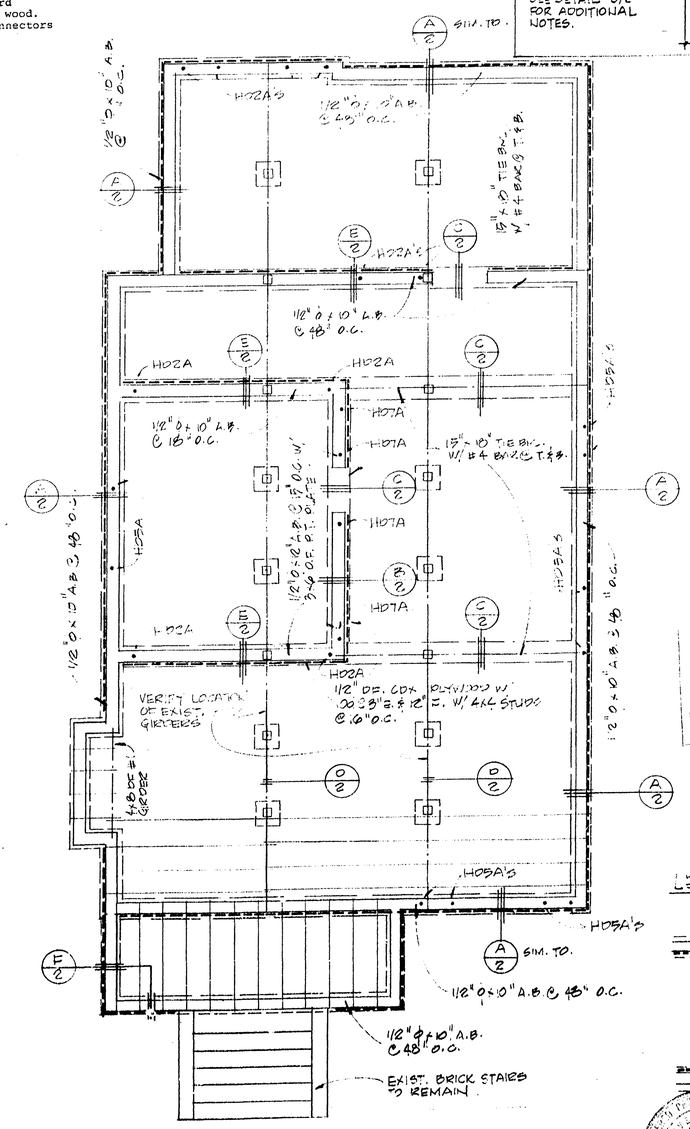


FOUNDATION PLAN

SCALE - 1/4" = 1'-0"

Town of Los Gatos
BUILDING DEPARTMENT
PLAN APPROVED
BY _____ DATE _____
NOT PROVIDED AS A CONSTRUCTION PERMIT OR BUILDING PERMIT. PLAN REVIEW PURSUANT TO THE VALUATION OF 2 OR MORE UNITS.

LEGEND :

DENOTES POINT WALL SHEAR PLY. 3/8" D.F. CDX W/ 8d @ 4" E. & 12" F. UNLESS NOTED OTHERWISE.

DENOTES SIMPSON HD HOLDOWN. HD2A, HD5A&D2 HD7A AS NOTED SEE DETAILS G, H, & I/2

CERTIFICATE EXPIRE 9-30-93

REV 5-21-93

FOUNDATION PLAN

Sheet 2 of 2 Job No. 22489

STEVEN ARNOLD
CIVIL ENGINEER
1671 The Alameda, Suite 305 San Jose California 95126
(408) 286-9111
APPROVED: STEVEN A. ARNOLD RCE 23397

Date 12/28
Scale 1/4" = 1'-0"

FOUNDATION PLAN FOR THE MOORE RESIDENCE 249 LOS GATOS BLVD. LOS GATOS, CALIFORNIA

SHEET NO 2 OF 2

22489

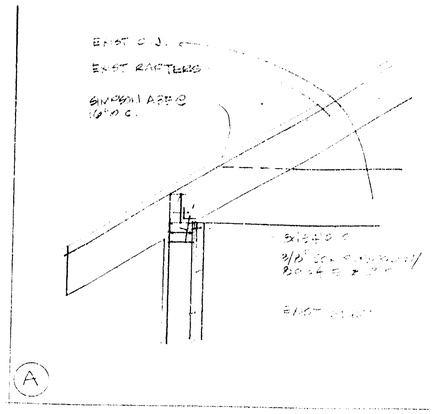

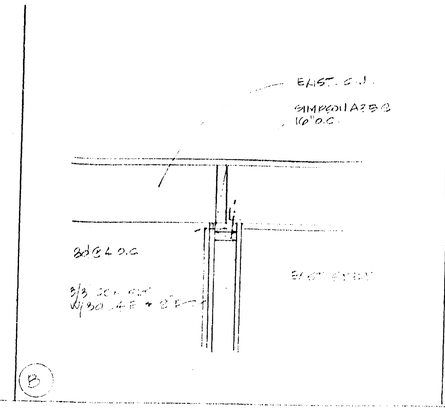

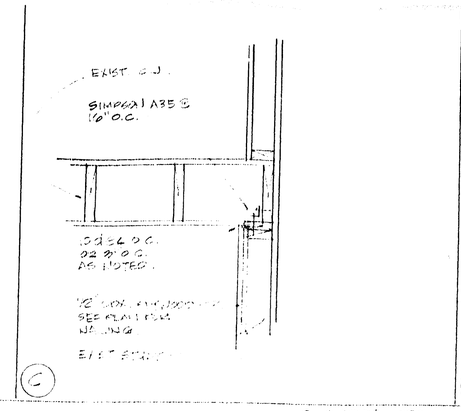

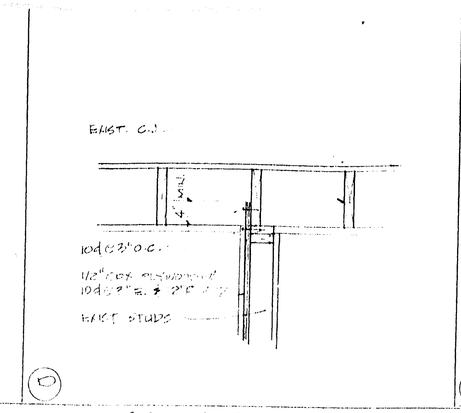

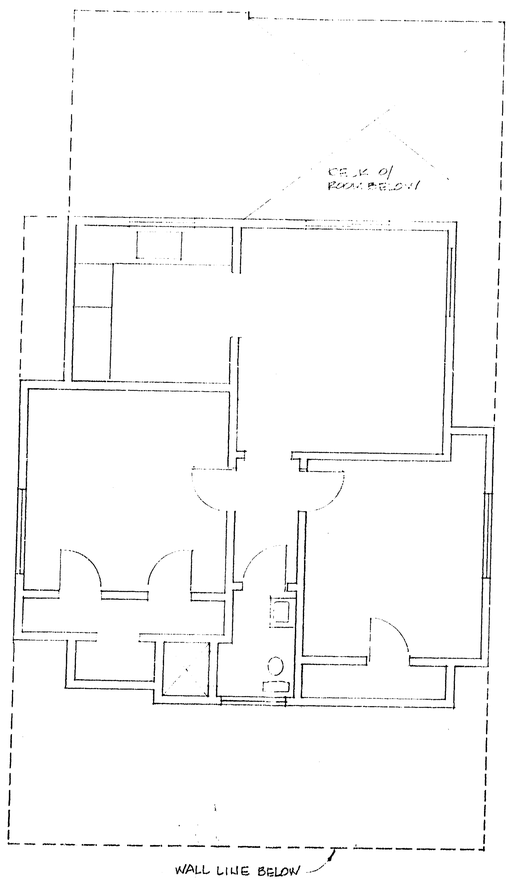

SECOND FLOOR PLAN

SCALE - 1/4" = 1'-0"

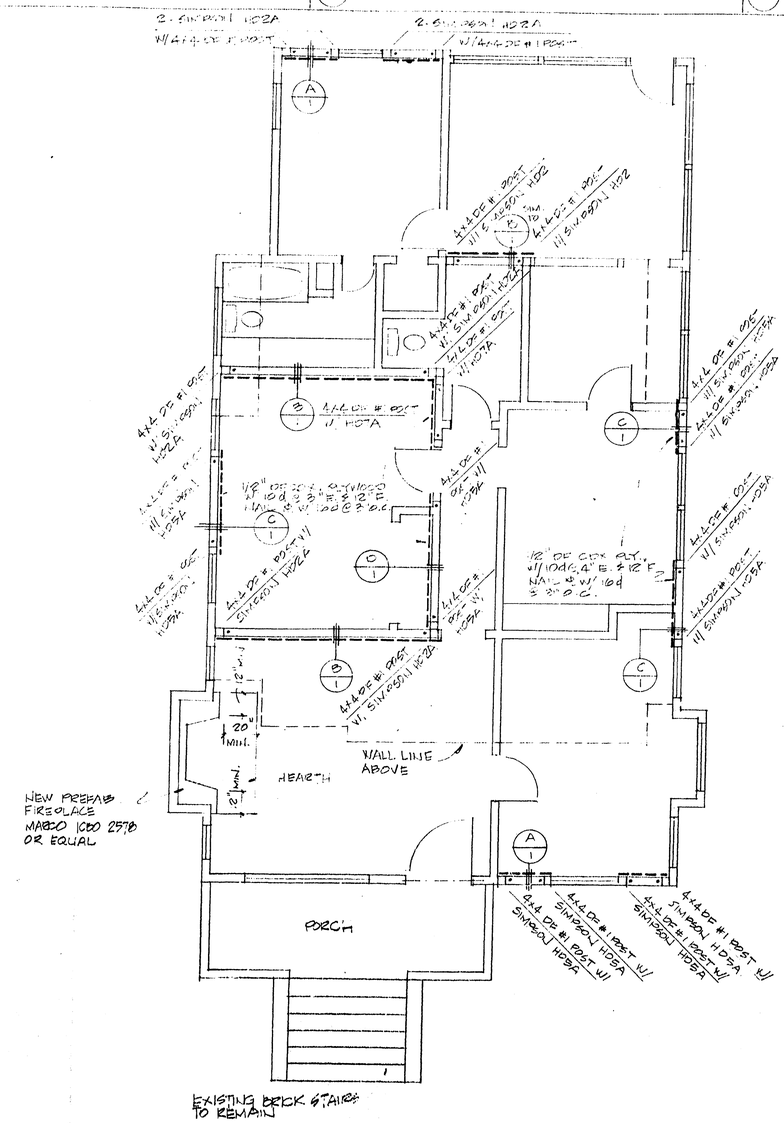

FIRST FLOOR PLAN

SCALE - 1/4" = 1'-0"

Town of Los Gatos
BUILDING DEPARTMENT
PLAN APPROVED
BY ___ DATE 2/2/90
THE STAMPING OF THIS PLAN SHALL NOT BE HELD TO PERMIT OR TO BE AN APPROVAL OF THE VIOLATION OF ANY TOWN OR STATE LAW.

LEGEND

▬ ▬ ▬ 3/8" D.F. CDX PLYWOOD W/ 8d @ 4" E. & 12" F. NAIL SILL PLATE W/ 16d @ 4" O.C. UNLESS NOTED OTHERWISE

REGISTERED PROFESSIONAL ENGINEER
STEVEN ARNOLD
No. 22301
CIVIL
STATE OF CALIFORNIA
CERTIFICATE EXPIRES 9-30-93

FOUNDATION PLAN
FOR THE MOORE RESIDENCE
249 LOS GATOS BLVD.
LOS GATOS, CALIFORNIA

| Date | STEVEN ARNOLD | Sheet |
|---|---|---|
| 12.26 1989 | CIVIL ENGINEER<br>1671 The Alameda, Suite 305 San Jose California 95126<br>(408) 286-9111 | 1 of 2 |
| Scale 1/4" = 1' | APPROVED:<br>STEVEN A. ARNOLD RCE 22301 | Job No. |

FLOOR PLANS & SITE PLAN

REVISIONS

SHEET NO.
1
OF 2

22489

# TOWN OF LOS GATOS

110 E. MAIN ST., LOS GATOS, CA. 95030
BUILDING INSPECTION DEPARTMENT - PHONE 354-6874

[redacted]

B 19192 1

| | |
|---|---|
| BUILDING ADDRESS | 249 Los Gatos Blvd |
| DATE | 6/7/90 |
| LOT NO | TRACT |
| TYPE OF BUILDING | Apartments |
| NO. OF BUILDINGS | 2 |
| Owner | Jack Moore |
| ADDRESS | 2542 S bascom Ste 215 Campbell, Ca |
| ARCHITECT OR ENGINEER | |
| ADDRESS | |
| CONTRACTOR | Owner builder |
| ADDRESS | |
| STATE LICENSE | TOWN LICENSE |

| | | | |
|---|---|---|---|
| NEW | 1400 40' | ALTER | REPAIR |
| DEMOLISH | | | |
| 1st Fl. | 2nd Fl. | GAR | BSMT |
| OTHER | | | |
| TOTAL FLOOR AREA | 2200 | NO. OF UNITS | 2 |
| NO. OF GARAGES | 2 | | |

~~Earthquake related~~, demolish and rebuild partial enclose front porch per drawings

As Built

| BUILDING PERMIT APPROVAL | | DATE |
|---|---|---|
| PLAN CHECK | Bob | 6/8/90 |
| ENGINEERING DEPT | | |
| FIRE DEPT | | |
| BUILDING DEPT | | 7/11/90 |
| SEWER CONNECT | | |

| | | | |
|---|---|---|---|
| FE 30 | BPC 35.00 | TYPE CONST | |
| SEWER 30 | BP 25.00 | OCC. GROUP | |
| WTR 30 | DOC 2.20 | USE ZONE | |
| INSPECT 30 | 42.20 | FIRE DIST. | |
| VALUATION | $ 1000 | | |

FEES & TAXES

| | | |
|---|---|---|
| BUILDING PERMIT | $ 42 | 20 |
| SEISMIC TAX | | 50 |
| CONSTRUCTION TAX | 2 | 20 |
| UTILITY TAX | 2 | 20 |
| PARK TAX | 1 | 60 |
| PLAN CHECK FEE | 35 | 00 |
| TOTAL | $ 93 | 70 |

NAME

ADDRESS

☐ NOT APPLICABLE

I CERTIFY THAT I AM PROPERLY LICENSED BY THE STATE OF CALIFORNIA CONTRACTOR'S LICENSE LAW.

SIGNATURE X

WORKER'S COMPENSATION DECLARATION

**A** I HEREBY AFFIRM THAT I HAVE A POLICY OF WORKER'S COMPENSATION INSURANCE. A CERTIFIED COPY OF A CERTIFICATE OF THAT INSURANCE IS HEREWITH FURNISHED, AND ON FILE WITH THE TOWN. I FURTHER AFFIRM THAT I SHALL KEEP THE INSURANCE IN EFFECT THROUGHOUT THE JOB.

SIGNATURE X

CERTIFICATE OF EXEMPTION FROM WORKER'S COMPENSATION INSURANCE

**B** I CERTIFY THAT IN THE PERFORMANCE OF THE WORK FOR WHICH THIS PERMIT IS ISSUED, I SHALL NOT EMPLOY ANY PERSON IN ANY MANNER SO AS TO BECOME SUBJECT TO THE WORKER'S COMPENSATION LAWS OF CALIFORNIA.

SIGNATURE X

I CERTIFY THAT I HAVE READ THIS APPLICATION AND STATE THAT THE ABOVE INFORMATION IS CORRECT. I AGREE TO COMPLY WITH ALL TOWN ORDINANCES AND STATE LAWS RELATING TO BUILDING CONSTRUCTION, AND HEREBY AUTHORIZE REPRESENTATIVES OF THIS CITY TO ENTER UPON THE ABOVE MENTIONED PROPERTY FOR INSPECTION PURPOSES.

SIGNATURE X

INSPECTION RECORD

VALIDATION

33BLA111 07/17/90 TOTAL 93.70

| INSPECTIONS | APPROVALS DATE | INSPECTOR'S INIT. |
|---|---|---|
| FOUNDATION LOCATION FORMS, REINFORCE | | |
| FRAME FIRE STOPS BRACING, BELTS | | |
| FURNACE LOCATION GAS VENT, DUCTS | | |
| INSULATION | | |
| LATH INT | | |
| INSULATION CERT | | |
| LANDSCAPING PARKING AND DRIVING | | |
| HANDICAPPED COMPLETED | | |
| FINAL | | |

249 Los Gatos Blvd  Porch partial enclosure

Carpentry material:

Beams, ledgers, plates to be DF #1
Joists to be DF#2
Studs to be construction grade or better

Town of Los Gatos
BUILDING DEPARTMENT
PLAN APPROVED
DATE 2-11-2

THE ISSUANCE OF THIS PLAN SHALL NOT BE HELD TO PERMIT OR TO BE AN APPROVAL OF THE VALIDATION OF ANY TOWN OR STATE LAW

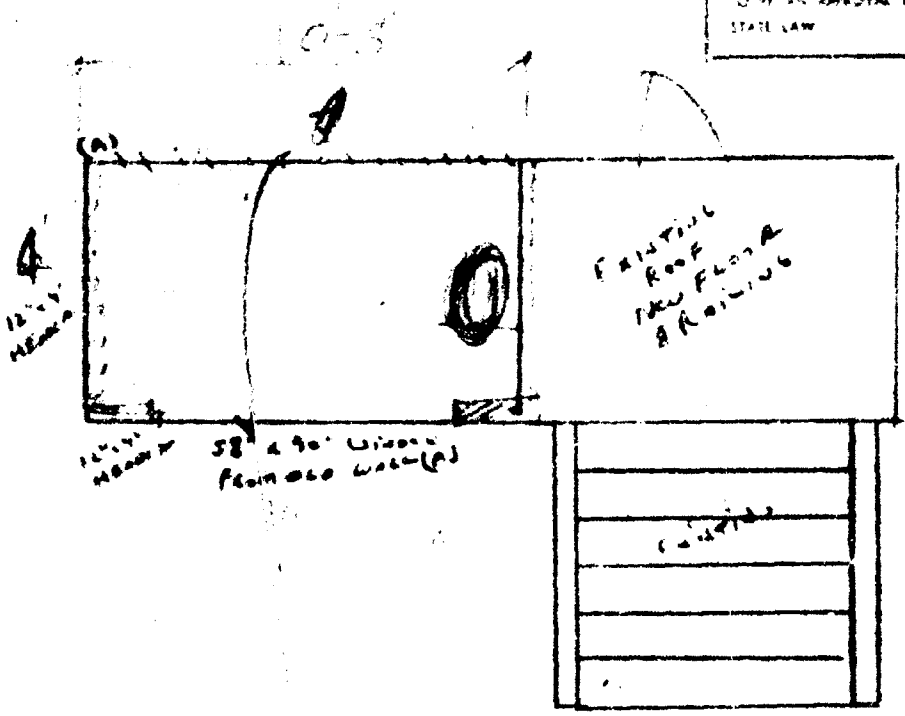


Scale: ¼" to 1'-0"

Inspetion for As Built

Town of Los Gatos
BUILDING DEPARTMENT
PLAN APPROVED

DATE

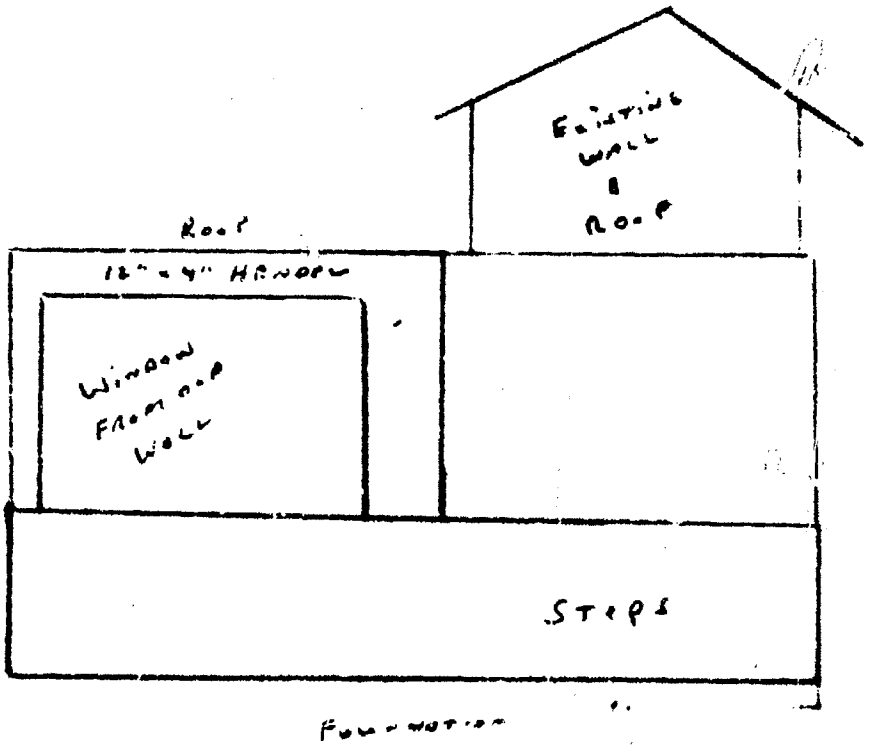


Scale ½" to 1'-0"

249 Los Gatos Blvd
Front view of partial porch enclosure

**TOWN OF LOS GATOS**

**OWNER-BUILDER VERIFICATION**

**ATTENTION OWNER-BUILDERS!**

IF YOU PLAN TO IMPROVE YOUR PROPERTY AND EMPLOY PERSONS OTHER THAN YOUR IMMEDIATE FAMILY, THE FOLLOWING INFORMATION WILL BE OF BENEFIT TO YOU. STATE AND FEDERAL LAWS REQUIRE THAT YOU:

1. REGISTER WITH THE STATE AND FEDERAL GOVERNMENTS AS AN EMPLOYER.
2. WITHHOLD AND REMIT INCOME TAX FOR EACH EMPLOYEE.
3. PAY SOCIAL SECURITY COSTS ON EACH EMPLOYEE.
4. WITHHOLD AND REMIT SOCIAL SECURITY COSTS ON EACH EMPLOYEE.
5. PAY WORKER'S COMPENSATION INSURANCE COSTS ON EACH EMPLOYEE.
6. WITHHOLD AND REMIT DISABILITY INSURANCE COSTS FOR EACH EMPLOYEE.
7. PAY UNEMPLOYMENT INSURANCE COSTS ON EACH EMPLOYEE.

YOU MAY CONSTRUCT IMPROVEMENTS FOR SALE ONLY UNDER SPECIFIC, LIMITED CONDITIONS.

YOU MAY CONSTRUCT IMPROVEMENTS FOR RENTAL-OCCUPANCY ONLY UNDER SPECIFIC, LIMITED CONDITIONS.

YOU MAY SUBCONTRACT PORTIONS OF THE CONSTRUCTION TO ANY PERSON OR FIRM, BUT THEY MUST BE LICENSED BY THE STATE OF CALIFORNIA.

INFORMATION ABOUT INSURANCE, LIEN LAWS, AND OTHER CONSTRUCTION MATTERS MAY BE OBTAINED FROM THE CONTRACTORS STATE LICENSE BOARD AND VARIOUS BUSINESS AND TRADE ASSOCIATIONS.

Please complete and return this information at your earliest opportunity to avoid unnecessary delay in processing and issuing your Building Permit.

1. I personally plan to provide the major labor and materials for construction of the proposed property improvement: ✓ (yes) or ____ (no).

2. I have signed an application for a Building permit for the proposed work: ✓ (yes) or ____ (no).

I AGREE TO CHECK THAT EACH SUBCONTRACTOR HAS A VALID TOWN OF LOS GATOS BUSINESS LICENSE BEFORE THEY BEGIN WORK. (YOU MAY VERIFY BUSINESS LICENSE STATUS WITH THE [redacted] FINANCE DEPT. AT 354-6836).

(SIGNATURE) July 17 1990 (DATE)

Property Owner: J. P. Moore

Address: 249 Los Gatos Blvd L6
(Of job site)

BL01:POWNER\OWNERVER

# TOWN OF LOS GATOS

ST., LOS GATOS, CA. 95030

BUILDING INSPECTION DEPARTMENT · PHONE 354-6876

**APPLICATION FOR BUILDING PERMIT**

B 18551

1

| | | | |
|---|---|---|---|
| BUILDING ADDRESS | 249 Los Gatos Blvd | DATE | |
| LOT NO. | TRACT | SIZE OF LOT | |
| USE OF EXISTING BUILDING | Duplex | NO. OF BUILDINGS NOW ON LOT | |
| OWNER | L Moore | PH | |
| ADDRESS | 249 Los Gatos Blvd | CITY | Los Gatos |
| ARCHITECT OR ENGINEER | STEVEN ARNOLD | PH | |
| ADDRESS | 1671 The Alameda Ste 305 | CITY | San Jose |
| CONTRACTOR | Rivol Enterprises | PH | 227-6801 |
| ADDRESS | 16200 Greenwood Rd | CITY | Morgan Hill Calif |
| STATE LICENSE | B 166307 | TOWN LICENSE | |

| | | | | |
|---|---|---|---|---|
| NEW | ADD | ALTER | REPAIR | DEMOLISH |
| 1st FL | 2nd FL | GAR | BSMT | OTHER |
| TOTAL FLOOR AREA | | NO OF STORIES | | NO OF LIVING UNITS |

install new Foundation

ESTIMATE VALUATION 25,000 OL

CONTRACTOR LICENSE AGENT

NAME

ADDRESS

☐ NOT APPLICABLE

I CERTIFY THAT I AM PROPERLY LICENSED BY THE STATE OF CALIFORNIA CONTRACTOR'S LICENSE LAW.

SIGNATURE X

**A** WORKER'S COMPENSATION DECLARATION

I HEREBY AFFIRM THAT I HAVE A POLICY OF WORKER'S COMPENSATION INSURANCE. A CERTIFIED COPY OF A CERTIFICATE OF THAT INSURANCE IS HEREWITH FURNISHED, AND ON FILE WITH THE TOWN. I FURTHER AFFIRM THAT I SHALL KEEP THE INSURANCE IN EFFECT THROUGHOUT THE JOB.

SIGNATURE X

**B** CERTIFICATE OF EXEMPTION FROM WORKER'S COMPENSATION INSURANCE

I CERTIFY THAT IN THE PERFORMANCE OF THE WORK FOR WHICH THIS PERMIT IS ISSUED, I SHALL NOT EMPLOY ANY PERSON IN ANY MANNER SO AS TO BECOME SUBJECT TO THE WORKER'S COMPENSATION LAWS OF CALIFORNIA.

SIGNATURE X

I CERTIFY THAT I HAVE READ THIS APPLICATION AND STATE THAT THE ABOVE INFORMATION IS CORRECT. I AGREE TO COMPLY WITH ALL TOWN ORDINANCES AND STATE LAWS RELATING TO BUILDING CONSTRUCTION, AND HEREBY AUTHORIZE REPRESENTATIVES OF THIS CITY TO ENTER UPON THE ABOVE MENTIONED PROPERTY FOR INSPECTION PURPOSES.

SIGNATURE X

| BUILDING PERMIT APPROVAL | | DATE |
|---|---|---|
| PLAN DEPT. | | / / |
| ENGINEERING DEPT | | / / |
| FIRE DEPT. | | / / |
| BUILDING DEPT. | | 2/3/90 |
| SEWER CONNECT | | |
| FR. SB | TYPE CONST. | |
| REAR SB | OCC. GROUP | |
| LEFT SB | USE ZONE | |
| RIGHT SB | FIRE SPR. | |
| VALUATION | $ | EQ |

| FEES & TAXES | |
|---|---|
| BUILDING PERMIT | $ |
| SIESMIC TAX | |
| CONSTRUCTION TAX | |
| UTILITY TAX | |
| PARK TAX | |
| PLAN CHECK FEE | |
| TOTAL | $ EQ |

**INSPECTION RECORD**

THIS permit for Foundation Repair only

Footings 2-22-90 [illegible]

Concrete Stem Walls 3-5-90 Bill

Final 3/16/90 Bill

VALIDATION

Allen LANEY

| APPROVALS | DATE | INSPECTOR'S SIG. |
|---|---|---|
| FOUNDATION, LOCATION, FORMS, MATERIALS | | |
| FRAME: FIRE STOPS, BRACING, BOLTS | | |
| FURNACE: LOCATION, GAS VENT, DUCTS | | |
| INSULATION | | |
| LATH. EXT. | | |
| INSULATION CERT. | | |
| LANDSCAPING PARKING AND GRADING | | |
| IMPROVEMENTS COMPLETED | | |
| FINAL | 3-16-90 | [illegible] |

DISTRIBUTION: 1. INSPECTION RECORD 2. INTERIM RECORD 3. PERMITTEE 4. TOWN CLERK

# TOWN OF LOS GATOS
# COMMUNITY DEVELOPMENT
# BUILDING PERMIT

| | | | |
|---|---|---|---|
| Permit ID/Type: | B19-0091 BUILDING/BUILDING/RESIDENTIAL/REROOF | Applied: | 02/07/2019 |
| Work Description: | T/O (E) COMP R/R WITH COMP 2100 SF | Approved: | |
| Status: | PENDING | Issued: | |
| Address: | 249 LOS GATOS BLVD, LOS GATOS, CA 95030 | Expires: | 8/6/2019 |
| Owner: | NGUYEN FAMILY TRUST<br>18030 SARATOGA LOS GATOS RD<br>MONTE SERENO, CA 95030 | Phone: | [redacted]3 |
| Contractor: | DBA LOS GATOS ROOFING<br>P O BOX 1726<br>LOS GATOS, CA 95031 | Phone: | 408-298-9399 |
| License No.: | 800707 | | |
| Job Value: | $10,000.00 | Buildings: | 1 |
| Total Sq. Ft.: | <$SQUARE_FEET$> | Houses: | 0 |
| Building Use: | Dwellings | Census #: | 434 |
| Occupancy Type: | R-3 | Construction Type: | V-B |

| | |
|---|---|
| Total Fees | $410.00 |
| Total Payments | $0.00 |
| **Balance Due** | $410.00 |

**LICENSED CONTRACTOR'S DECLARATION**

I hereby affirm under penalty of perjury that I am licensed under provisions of Chapter 9 (commencing with Section 7000) of Division 3 of the Business and Professions Code, and my license is in full force and effect.

License Class C-39 California Contractor License No. 800707

Expiration Date 8-30-19 Contractor Signature

**WORKERS' COMPENSATION DECLARATION WARNING: FAILURE TO SECURE WORKERS' COMPENSATION COVERAGE IS UNLAWFUL, AND SHALL SUBJECT AN EMPLOYER TO CRIMINAL PENALTIES AND CIVIL FINES UP TO ONE HUNDRED THOUSAND DOLLARS ($100,000), IN ADDITION TO THE COST OF COMPENSATION, DAMAGES AS PROVIDED FOR IN SECTION 3706 OF THE LABOR CODE, INTEREST, AND ATTORNEY'S FEES.**

I hereby affirm under penalty of perjury one of the following declarations:

____ I have and will maintain a certificate of consent to self-insure for workers' compensation, issued by the Director of Industrial Relations as provided for by Section 3700 of the Labor Code, for the performance of the work for which this permit is issued. Policy No. _____

X I have and will maintain workers' compensation insurance, as required by Section 3700 of the Labor Code, for the performance of the work for which this permit is issued. My workers' compensation insurance carrier and policy number are:

Carrier Redwood Fire & Cas Policy Number Wine 200086 Expiration Date 3-22-19

Name of Agent _____ Phone # _____

____ I certify that, in the performance of the work for which this permit is issued, I shall not employ any person in any manner so as to become subject to the workers' compensation laws of California, and agree that, if I should become subject to the workers' compensation provisions of Section 3700 of the Labor Code, I shall forthwith comply with those provisions.

Signature of Applicant Date 2-10-19

B19-0091

TOWN OF LOS GATOS
BUILDING DIVISION PERMIT APPLICATION
(Email: Building@LosGatosCA.gov)

| | | |
|---|---|---|
| *PROJECT ADDRESS 249 Los Gatos Blvd. | | *APN# 529-24-022 |
| *OWNER NAME C. Nguyen | *PHONE - REQUIRED [redacted] | E-MAIL |
| *STREET ADDRESS Same | *CITY, STATE, ZIP | FAX |
| APPLICANT NAME Contractor | PHONE 408 298-9399 | E-MAIL info@losgatosroofing.com |
| STREET ADDRESS | CITY, STATE, ZIP | FAX |
| TENANT CONTACT NAME | PHONE | E-MAIL |
| **BUSINESS NAME Jireh Inc. DBA Los Gatos Roofing | | CONTACT FAX |
| BUSINESS ADDRESS, CITY, STATE, ZIP 888 Faulstich Ct San Jose CA 95112 | | |
| *CONTACT: ☐ OWNER ☐ H.O.A. ☐ TENANT ☒ CONTRACTOR ☐ PERMIT SERVICE ☐ ARCHITECT ☐ DESIGNER ☐ ENGINEER | | |
| *CONTRACTOR NAME Los Gatos Roofing | PHONE 408 298-9399 | LICENSE TYPE C-39 |
| *STATE LICENSE # 800707 | STATE LICENSE EXPIRES 10/31/19 | TOWN BUSINESS LICENSE # 34051 |
| *DESCRIPTION OF WORK Remove existing comp. roofing. Install 21 sq Comp Over 7/16" OSB | | |
| *CONSTRUCTION VALUATION (Per Structure): 10,762.00 | | |
| *AREA OF REMODEL SPACE: S.F. | *NEW OR RELOCATED PLUMBING FIXTURES: Y N | |
| **EXISTING USE(S) | **PROPOSED USE(S) | |
| **OCCUPANCY(S): | **CONSTRUCTION TYPE: | HISTORIC DISTRICT OR PRE-1941? Y N |
| FIRE SPRINKLERS: Y N | FIRE HAZARD AREA: Y N | **HAZARDOUS MATERIALS? Y N | *SEPTIC or SEWER |

*REQUIRED INFORMATION FOR ALL APPLICATIONS
**REQUIRED FOR COMMERCIAL APPLICATIONS

| | EXISTING | | PROPOSED | |
|---|---|---|---|---|
| First Floor | | S.F. | | S.F. |
| Second Floor | | S.F. | | S.F. |
| Third Floor/Attic – Habitable? Y N | | S.F | | S.F |
| Basement/Cellar – Habitable? Y N | | S.F. | | S.F. |
| Garage – Attached Detached | | S.F. | | S.F. |
| Pool House/Cabana Pool/Spa | | S.F. | | S.F. |
| Porch Deck Retaining Wall | | S.F./L.F. | | S.F. |

REROOF - RESIDENTIAL AND COMMERCIAL

| | | |
|---|---|---|
| TEAR-OFF: SHAKE COMP WOOD SHINGLES TILE B.U.R. | # of SQUARES PER STRUCTURE | COOL ROOF Y (N) |
| NEW: SHAKE COMP WOOD SHINGLES TILE B.U.R. | | ICC ES/ESR # |
| CONSTRUCTION VALUATION (PER STRUCTURE): 10762 | 21 | CLASS A C |

Please complete Electrical, Mechanical, and Plumbing details on reverse side

N:\DEV\FORMS\BUILDING\BLDGAPPLICATION Rev 09/19/16

# TOWN OF LOS GATOS
## COMMUNITY DEVELOPMENT
## BUILDING PERMIT

| | | | |
|---|---|---|---|
| Permit ID/Type: | B22-0242 BUILDING/BUILDING/RESIDENTIAL/POOL | Applied: | 03/22/2022 |
| Work Description: | New Pool 550 sf and Spa 50 sf | Approved: | 03/22/2022 |
| Status: | PLAN CHECK | Issued: | |
| Address: | 249 LOS GATOS BLVD, LOS GATOS, CA 95030 | Expires: | 10/9/2022 |
| Owner: | NGUYEN FAMILY TRUST<br>18030 SARATOGA LOS GATOS RD<br>MONTE SERENO, CA 95030 | Phone: | [redacted] |
| Contractor: | SOUTH BAY GUNITE INC<br>4986 PARRISH CT<br>SAN JOSE, CA 95111 | Phone: | 4083629553 |
| License No.: | 294213 | | |
| Job Value: | $100,000.00 | Buildings: | 1 |
| Total Sq. Ft.: | 600 | Houses: | 0 |
| Building Use: | Dwellings | Census #: | 434 |
| Occupancy Type: | R-3 | Construction Type: | V-B |

| | |
|---|---|
| Total Fees | $3259.82 |
| Total Payments | $0.00 |
| **Balance Due** | $3259.82 |

**LICENSED CONTRACTOR'S DECLARATION**

I hereby affirm under penalty of perjury that I am licensed under provisions of Chapter 9 (commencing with Section 7000) of Division 3 of the Business and Professions Code, and my license is in full force and effect.

License Class C-53 California Contractor License No. 294213

Expiration Date 09-30-2023 Contractor Signature

**WORKERS' COMPENSATION DECLARATION WARNING: FAILURE TO SECURE WORKERS' COMPENSATION COVERAGE IS UNLAWFUL, AND SHALL SUBJECT AN EMPLOYER TO CRIMINAL PENALTIES AND CIVIL FINES UP TO ONE HUNDRED THOUSAND DOLLARS ($100,000), IN ADDITION TO THE COST OF COMPENSATION, DAMAGES AS PROVIDED FOR IN SECTION 3706 OF THE LABOR CODE, INTEREST, AND ATTORNEY'S FEES.**

I hereby affirm under penalty of perjury one of the following declarations:

____ I have and will maintain a certificate of consent to self-insure for workers' compensation, issued by the Director of Industrial Relations as provided for by Section 3700 of the Labor Code, for the performance of the work for which this permit is issued. Policy No. _____

✓ I have and will maintain workers' compensation insurance, as required by Section 3700 of the Labor Code, for the performance of the work for which this permit is issued. My workers' compensation insurance carrier and policy number are:

Carrier PREFERRED Employers INS. Policy Number ON0943103 Expiration Date 01-14-2023

Name of Agent ODELIA Phone # 818-676-0016

____ I certify that, in the performance of the work for which this permit is issued, I shall not employ any person in any manner so as to become subject to the workers' compensation laws of California, and agree that, if I should become subject to the workers' compensation provisions of Section 3700 of the Labor Code, I shall forthwith comply with those provisions.

Signature of Applicant Date 4-13-2022

***This Page***
***Intentionally***
***Left Blank***