CIVIL ENGINEERING PLANS
FOR
PINNACLE ON SIXTH
LAKE WORTH BEACH, FLORIDA 33460

DEVELOPER: PINNACLE ON SIXTH, LLC
9100 S. DADELAND BOULEVARD, SUITE 700
MIAMI, FL 33156
TEL: 305-854-7100

SURVEYOR: BROWN & PHILLIPS, INC.
1860 OLD OKEECHOBEE ROAD., SUITE 509
WEST PALM BEACH, FL 33409
TEL: 561-615-3988

PLANNER: URBAN DESIGN STUDIO, LLC
610 CLEMATIS STREET, SUITE CU-02
WEST PALM BEACH, FL 33401
TEL: 561-366-1100

ARCHITECT: LUCILLE HINNERS ARCHITECTURE LLC
1440 SW 14TH DRIVE
BOCA RATON, FL 33486
TEL: 305-491-3320

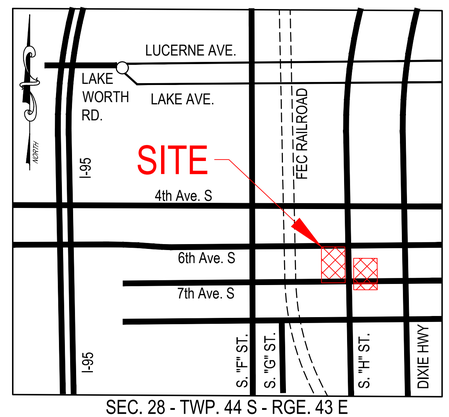

SEC. 28 - TWP. 44 S - RGE. 43 E

LOCATION MAP
N.T.S.

INDEX OF SHEETS

SHEET	DESCRIPTION	DRAWING DATE	LATEST REVISION	REVISION DATE
C0.0	COVER SHEET	3/30/2026	2	7/16/2026
C0.1	GENERAL NOTES	3/30/2026	-	-
C1.1	DEMOLITION & EROSION CONTROL PLAN	3/30/2026	1	6/10/2026
C2.1	SIGNING, STRIPING & GEOPMETRIC PLAN	3/30/2026	2	7/16/2026
C3.1	PAVING, GRADING & DRAINAGE PLAN	3/30/2026	2	7/16/2026
C4.1	PAVING, GRADING & DRAINAGE DETAILS	3/30/2026	-	-
C4.2	PAVING, GRADING & DRAINAGE DETAILS	3/30/2026	-	-
C4.3	PAVING, GRADING & DRAINAGE DETAILS	3/30/2026	-	-
C5.1	POTABLE WATER & SANITARY SEWER PLAN	3/30/2026	2	7/16/2026
C6.1	POTABLE WATER & SANITARY SEWER DETAILS	3/30/2026	-	-
C6.2	POTABLE WATER & SANITARY SEWER DETAILS	3/30/2026	-	-
C6.3	POTABLE WATER & SANITARY SEWER DETAILS	3/30/2026	-	-
C6.4	POTABLE WATER & SANITARY SEWER DETAILS	3/30/2026	-	-

ABBREVIATIONS:

BUFFER EASEMENT	B.E.
CATCH BASIN	CB
CLEANOUT	CO
CONCRETE	CONC.
CORRUGATED METAL PIPE	CMP
EDGE OF PAVEMENT	EOP
EXISTING	EXIST./ EX
FINISHED FLOOR ELEVATION	FFE
FIRE HYDRANT	FH
FORCE MAIN	FM
GATE VALVE	GV
HIGH POINT	HP
LIFT STATION	LS
LIGHT POLE	LP
LINEAR FEET	LF
MANHOLE	MH
MATCH EXISTING	ME
MINIMUM	MIN.
POST INDICATOR VALVE	PIV
POLYVINYL CHLORIDE	PVC
PROPOSED	PROP.
PROPERTY LINE	P/L
REDUCED PRESSURE ZONE	RPZ
REINFORCED CONCRETE PIPE	RCP
SANITARY	SAN
STORM MANHOLE	SMH
STORM	STM
SERVICE	SVC
TYPICAL	TYP
UTILITY EASEMENT	U.E.
UNKNOWN	UNK
VERIFY IN FIELD	VIF
WATER MAIN	WM
WATER	WTR
YARD DRAIN	YD

Call 48 hours before you dig
It's the Law!
1-800-432-4770
Sunshine State One Call of Florida, Inc.

CDI
CIVIL DESIGN, INC.
Service Driven Design – Engineered Results
1400 Centrepark Blvd, Suite 905
West Palm Beach, FL 33401
T: 561.659.5760 F: 561.659.5772
www.civil-design.com
Registry No. 9664

DATUM = NAVD '88
NGVD '29 CONVERSION FACTOR = (+)1.54'

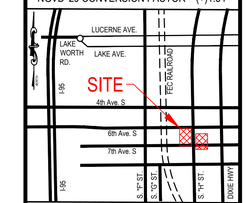

SEC. 28 - TWP. 44 S - RGE. 43 E

LOCATION MAP
N.T.S.

PINNACLE ON SIXTH

LAKE WORTH BEACH, FL

APPROVED BY:

T. Jeff Trompeter, State of Florida, Professional Engineer, License No. 51045. This item has been digitally signed and sealed by T. Jeff Trompeter on the date indicated here. Printed copies of this document are not considered signed and sealed and the signature must be verified on any electronic copies.

CDI PROJECT NO.
26974-01

DATE: 03/30/2026
DESIGNED: CDI
DRAWN: CDI

NO.	DATE	REVISION DESCRIPTION
1	6/10/26	ADDRESS CITY SPRT COMMENTS
2	7/16/26	ADDRESS CITY SPRT COMMENTS

COVER SHEET

C0.0

GENERAL NOTES:

1. COORDINATION OF DRAWINGS AND DISCIPLINES. IT IS THE CONTRACTOR'S RESPONSIBILITY TO REVIEW ALL DRAWINGS AND SPECIFICATIONS FOR COMPLETENESS AND ACCURACY. FURTHER, CONTRACTOR IS TO COORDINATE ALL TRADES AND DISCIPLINES PROPERLY. ANY DISCREPANCIES IN PLANS OR SPECIFICATIONS ARE TO BE BROUGHT TO THE ATTENTION OF THE ENGINEER IN WRITING.

2. BUILDINGS. CONTRACTOR IS ADVISED THAT THE BUILDINGS AND ASSOCIATED SYSTEMS ARE STILL UNDER DESIGN AND REVIEW. AS SUCH, THERE MAY BE MODIFICATIONS TO SERVICE LINES (MATERIALS, SIZES, LOCATIONS, DEPTHS, ETC.) AS THE BUILDING DOCUMENTS ARE FINALIZED AND PERMITTED.

3. SAFETY. IT SHALL BE THE CONTRACTOR'S SOLE RESPONSIBILITY TO TAKE THE NECESSARY PRECAUTIONS TO ENSURE PROPER SAFETY AND WORKMANSHIP WHEN WORKING IN THE VICINITY OF EXISTING UTILITY LINES. THE CONTRACTOR SHALL BE RESPONSIBLE TO COORDINATE WITH THE RESPECTIVE UTILITY PROVIDER ON ANY WORK IN THE VICINITY OF OVERHEAD OR UNDERGROUND LINES. CONTRACTOR SHALL VERIFY PROPER CLEARANCE BELOW EXISTING OVERHEAD LINES PRIOR TO WORKING WITHIN THE VICINITY OF THE LINES. THE CONTRACTOR SHALL BE RESPONSIBLE FOR TAKING SUCH MEASURES AS NECESSARY TO PROTECT THE HEALTH, SAFETY AND WELFARE OF THOSE PERSONS HAVING ACCESS TO THE WORK SITE.

4. FAMILIARITY WITH SITE CONDITIONS. THE CONTRACTOR SHALL VISIT THE SITE AND ACQUAINT HIMSELF WITH ALL EXISTING CONDITIONS. THE EXISTING GRADES SHOWN ON THE DRAWINGS ARE AS PROVIDED BY THE SURVEYOR AND NO REPRESENTATION IS MADE AS TO THEIR ACCURACY OR CONSISTENCY. THE CONTRACTOR SHALL VERIFY ALL EXISTING GRADES TO THE EXTENT NECESSARY TO ENSURE COMPLETION OF THE JOB TO THE PROPOSED GRADES INDICATED ON THE DRAWINGS.

5. WORKMANSHIP. ALL WORK SHALL BE PERFORMED IN A WORKMANSHIP-LIKE MANNER AND SHALL CONFORM WITH ALL APPLICABLE CITY, COUNTY, STATE AND FEDERAL REGULATIONS AND/OR CODES, INCLUDING OSHA.

6. ELEVATIONS. ALL ELEVATIONS REFER TO THE NORTH AMERICAN VERTICAL DATUM OF 1988 (NAVD'88).

7. SITE PLAN. REFER TO SITE PLAN PREPARED BY URBAN DESIGN STUDIO, LLC FOR ADDITIONAL INFORMATION.

8. SURVEY. REFER TO SURVEY PREPARED BY BROWN & PHILLIPS, INC. FOR BENCHMARK LOCATIONS, ELEVATIONS & ADDITIONAL INFORMATION.

9. FIELD LOCATIONS. THE CONTRACTOR SHALL CONTACT "SUNSHINE STATE ONE CALL OF FLORIDA, INC. (1-800-432-4770)" AT LEAST 48 HOURS PRIOR TO BEGINNING ANY EXCAVATION. THE CONTRACTOR SHALL GIVE ADEQUATE NOTIFICATION TO ALL AFFECTED UTILITY OWNERS FOR REMOVAL, RELOCATION AND ALTERATION OF THEIR EXISTING FACILITIES.

10. PROTECTION OF UTILITIES. THE CONTRACTOR SHALL BE RESPONSIBLE AT ALL TIMES THROUGHOUT THE DURATION OF CONSTRUCTION FOR THE PROTECTION OF ALL EXISTING AND NEWLY INSTALLED ABOVE GROUND, UNDERGROUND, AND ON THE SURFACE STRUCTURES AND UTILITIES FROM DAMAGE OR SERVICE DISRUPTION.

11. EXISTING UTILITIES. EXISTING UTILITY LOCATIONS SHOWN ON THESE PLANS ARE APPROXIMATE. THE ENGINEER ASSUMES NO RESPONSIBILITY FOR THE ACCURACY OF THE EXISTING UTILITIES SHOWN ON THE PLANS OR FOR ANY EXISTING UTILITIES THAT ARE NOT SHOWN ON THE PLANS.
    - 11.1. PRIOR TO THE START OF ANY CONSTRUCTION ACTIVITY, IT SHALL BE THE CONTRACTOR'S RESPONSIBILITY TO MAKE ARRANGEMENTS FOR FIELD LOCATIONS OF EXISTING UTILITIES.
    - 11.2. PRIOR TO BEGINNING CONSTRUCTION, THE CONTRACTOR SHALL PROVIDE WRITTEN VERIFICATION REGARDING THE SIZE, LOCATION, ELEVATION, AND MATERIAL OF EXISTING UTILITIES WITHIN THE AREA OF CONSTRUCTION.
    - 11.3. ANY RELOCATIONS OF THE VARIOUS EXISTING UTILITIES SHALL BE COORDINATED WITH THE RESPECTIVE UTILITY PROVIDER IN A TIMELY MANNER TO MINIMIZE IMPACT ON THE CONSTRUCTION SCHEDULE.
    - 11.4. THE CONTRACTOR SHALL BE RESPONSIBLE FOR DAMAGE TO ANY EXISTING UTILITIES FOR WHICH IT FAILS TO REQUEST LOCATIONS FROM THE UTILITY OWNER. THE CONTRACTOR IS RESPONSIBLE AS WELL FOR DAMAGE TO ANY EXISTING UTILITIES WHICH ARE PROPERLY LOCATED.
    - 11.5. IF UPON EXCAVATION, AN EXISTING UTILITY IS FOUND TO BE IN CONFLICT WITH THE PROPOSED CONSTRUCTION OR TO BE OF A SIZE OR MATERIAL DIFFERENT FROM THAT SHOWN ON THE PLANS; THE CONTRACTOR SHALL IMMEDIATELY NOTIFY THE ENGINEER.

12. FIELD REVIEWS. THE CONTRACTOR SHALL NOTIFY THE ENGINEER 48 HOURS PRIOR TO ANY REQUIRED FIELD REVIEWS OR INSPECTIONS AND SHALL SUPPLY ALL EQUIPMENT NECESSARY, LABOR AND MATERIALS FOR INSPECTION AND/OR TEST. ALL WORK SHALL BE OPEN AND SUBJECT TO REVIEW AND/OR INSPECTION BY AUTHORIZED PERSONNEL OF THE OWNER, INVOLVED UTILITY COMPANIES, PROJECT ENGINEER AND REGULATORY AGENCIES. ALL RECOMMENDATIONS AND REQUIREMENTS OF INSPECTION PERSONNEL OTHER THAN THE OWNER'S SHALL BE REPORTED TO THE ENGINEER PRIOR TO IMPLEMENTATION.

13. DIFFERING SITE CONDITIONS. THE CONTRACTOR SHALL IMMEDIATELY NOTIFY THE ENGINEER OF ANY DISCREPANCIES FOUND BETWEEN THE DRAWINGS AND THE FIELD CONDITIONS PRIOR TO CONSTRUCTION IN THE AREA OF CONFLICT. ANY DIFFERING SITE CONDITIONS FROM THAT WHICH ARE REPRESENTED ON THE PLANS, WHETHER ABOVE, ON OR BELOW THE SURFACE OF THE GROUND, ARE TO BE BROUGHT TO THE IMMEDIATE ATTENTION OF THE ENGINEER AND THE OWNER IN WRITING.

14. REQUIRED PERMITS. IT IS THE RESPONSIBILITY OF THE CONTRACTOR(S) TO ENSURE THAT ALL REQUIRED PERMITS ARE OBTAINED AND AT THE JOB SITE PRIOR TO THE COMMENCEMENT OF CONSTRUCTION. CONTRACTOR SHALL ABIDE BY ALL PERMIT CONDITIONS.

15. DEWATERING. IF REQUIRED, THE CONTRACTOR SHALL BE RESPONSIBLE FOR OBTAINING AND COMPLYING WITH ANY DEWATERING PERMITS AND/OR APPROVALS NECESSARY FOR THE CONSTRUCTION OF THE PROPOSED FACILITIES AND SYSTEMS.

16. USE OF EXISTING MATERIALS. NO EXISTING MATERIAL SHALL BE USED IN NEW CONSTRUCTION UNLESS APPROVED DURING THE SHOP DRAWING APPROVAL PROCESS.

17. EXISTING LANDSCAPE. CONTRACTOR SHALL BE EXTREMELY CAUTIOUS WHEN WORKING NEAR TREES WHICH ARE TO BE SAVED, WHETHER SHOWN ON THE PLAN OR DESIGNATED IN THE FIELD.

18. SHOP DRAWINGS. THE CONTRACTOR SHALL PROVIDE SHOP DRAWINGS, PRODUCT DATA, MATERIAL SPECIFICATIONS AND OTHER INFORMATION REGARDING CONSTRUCTION MATERIALS AND STRUCTURES AS REQUESTED BY THE OWNER, ENGINEER OR JURISDICTIONAL AGENCY. SHOP DRAWINGS MUST BE NEWLY PREPARED INFORMATION, DRAWN TO ACCURATE SCALE. DO NOT REPRODUCE CONTRACT DOCUMENTS OR COPY STANDARD INFORMATION AS THE BASIS OF SHOP DRAWINGS. STANDARD INFORMATION PREPARED WITHOUT SPECIFIC REFERENCE TO THE PROJECT WILL NOT BE CONSIDERED A SHOP DRAWING.
    - 18.1. BY SUBMITTAL OF ANY SHOP DRAWING OR CATALOG DATA, BEARING AN APPROVAL STAMP, THE CONTRACTOR REPRESENTS THAT IT HAS DETERMINED AND VERIFIED ALL FIELD MEASUREMENTS, FIELD CONSTRUCTION CRITERIA, MATERIALS, DIMENSIONS, CATALOG NUMBERS AND SIMILAR DATA, OR WILL DO SO, AND THAT IT HAS CHECKED AND COORDINATED EACH ITEM WITH OTHER APPLICABLE APPROVED SHOP DRAWINGS AND THE CONTRACT REQUIREMENTS.
    - 18.2. SHOP DRAWINGS AND CATALOG DATA SUBMITTED WITHOUT THE CONTRACTOR'S STAMP OF APPROVAL WILL BE RETURNED TO THE CONTRACTOR WITHOUT REVIEW. APPROVAL OF SHOP DRAWINGS, SAMPLES, OR CATALOG DATA BY THE ENGINEER SHALL NOT AUTHORIZE ANY DEVIATION FROM THE REQUIREMENT OF THE CONTRACT DOCUMENTS.
    - 18.3. ANY PROPOSED SUBSTITUTE OR EQUAL TO THAT SHOWN ON THE CONTRACT DOCUMENTS SHALL BE ACCOMPANIED BY CALCULATIONS SUBSTANTIATING EQUIVALENCY. SHOP DRAWINGS WITH SUBSTITUTE MATERIALS NOT ACCOMPANIED BY CALCULATIONS WILL BE RETURNED WITHOUT REVIEW.
    - 18.4. THE CONTRACTOR SHALL CONFIRM COMPATIBILITY OF PIPE SLOPES AND INVERTS DURING SHOP DRAWING AND MATERIALS ORDERING PHASE OF THE PROJECT AND ADVISE THE ENGINEER IN WRITING OF ANY DISCREPANCIES.
    - 18.5. INDIVIDUAL SHOP DRAWINGS FOR ALL PRECAST STRUCTURES ARE REQUIRED. CATALOG LITERATURE WILL NOT BE ACCEPTED FOR PRECAST STRUCTURES.

19. TESTING. THE CONTRACTOR SHALL BE RESPONSIBLE FOR ALL REQUIRED TESTS TO BE PERFORMED BY AN INDEPENDENT TESTING LABORATORY. THE CONTRACTOR UNDERSTANDS THAT ANY AND ALL TESTS, INSPECTIONS, PROCEDURES INCLUDING ALL LABOR, MATERIALS, TIME AND EFFORT IN ORDER TO HAVE ALL WORK DESIGNATED AS FINAL BY THE RESPECTIVE JURISDICTIONAL AUTHORITIES AND THAT SUCH TESTS, INSPECTIONS AND PROCEDURES ARE INCLUDED IN THE BID OR PROVIDED BY OWNER AS STATED IN THE CONTRACT BETWEEN THE OWNER AND CONTRACTOR.

20. RECORD DRAWINGS. RECORD DRAWINGS SHALL BE PREPARED BY A FLORIDA REGISTERED LAND SURVEYOR AND SUBMITTED IN SUFFICIENT QUANTITIES AS REQUIRED BY THE OWNER, ENGINEER AND JURISDICTIONAL AGENCIES TO COMPLETE THE CLOSE-OUT OF THE PROJECT. THE CONTRACTOR SHALL PROVIDE THE ENGINEER OF RECORD WITH ADEQUATE RECORD DRAWING INFORMATION, WHICH HAS BEEN PREPARED BY A LAND SURVEYOR REGISTERED IN THE STATE OF FLORIDA. THE SURVEYOR SHALL SIGN AND SEAL THE RECORD DRAWINGS. THE FOLLOWING SHALL BE THE MINIMUM REQUIREMENTS FOR RECORD DRAWING INFORMATION:
    - 20.1. THE WORDS "RECORD DRAWINGS" SHALL BE WRITTEN IN BOLD LETTERS IN A CONSPICUOUS PLACE. NO RUBBER STAMP ON PLANS SHALL BE ACCEPTED.
    - 20.2. ANY CHANGES IN ALIGNMENT, PIPE CONFLICTS, LOCATION OF STORM MANHOLES, CATCH BASINS, ETC. SHALL BE SHOWN TO SCALE ON RECORD DRAWINGS. THE "PROPOSED" ALIGNMENT, ETC. SHALL BE CROSSED OUT OR REMOVED AS REQUIRED BY THE RESPECTIVE REGULATORY AGENCY.
    - 20.3. THE DRAWINGS SHALL BE LEGIBLE AND THE AS-BUILT DIMENSIONS EASY TO IDENTIFY.
    - 20.4. DATA FOR STRUCTURES, PIPE SLOPES, AND PIPE LENGTHS AS CONSTRUCTED SHALL BE SHOWN ON THE PLAN SHEET NEXT TO "PROPOSED" DIMENSIONS. THE "PROPOSED" NUMBERS SHALL BE CROSSED OUT. IF THE ASBUILT CONDITION IS THE SAME AS THE PROPOSED INFORMATION, THEN THE PROPOSED INFORMATION WILL BE CROSSED OUT AND THE ASBUILT DATA WRITTEN.

21. FINAL UTILITY ADJUSTMENTS. ALL UTILITIES SHALL BE ADJUSTED TO NEW FINISH GRADES AND PROPERLY SET TO PAVEMENT CROSS SLOPE AS REQUIRED.

SITE DEMOLITION AND EROSION CONTROL NOTES:

1. SITE ACCESS. SUITABLE STABILIZED ROADS ARE TO BE PROVIDED DURING CONSTRUCTION FOR FIRE AND PARAMEDICAL ACCESS.

2. SITE. CONTRACTOR ACCEPTS THE SITE AS IS. FOR DAMAGES CAUSED BY THE CONTRACTOR, ANY REPAIRS TO EXISTING SITE ELEMENTS INCLUDING PAVEMENT, SIDEWALKS, CURBING, DRAINAGE, SANITARY SEWER, WATER, SIGNAGE & STRIPING SHALL BE INCLUDED IN THE BID PRICE.

3. EROSION CONTROL. THE CONTRACTOR SHALL INSTALL AND MAINTAIN EROSION AND TURBIDITY BARRIERS PRIOR TO AND DURING CONSTRUCTION TO PREVENT VIOLATION OF STATE WATER QUALITY STANDARDS FOR OFFSITE DISCHARGES. THESE BARRIERS SHALL REMAIN IN PLACE UNTIL CONSTRUCTION IS COMPLETED, SOILS ARE STABILIZED, AND VEGETATION HAS BEEN ESTABLISHED.

4. FILTER FABRIC. WITHIN THE LIMITS OF CONSTRUCTION, FILTER FABRIC SHALL BE INSTALLED ON ALL CATCH BASIN GRATES AND MAINTAINED UNTIL CONSTRUCTION IS COMPLETE.

5. ADJACENT IMPACTS. CONTRACTOR SHALL PROTECT ADJACENT WATER BODIES, WETLANDS AND PROPERTIES FROM DAMAGE BY SEDIMENTATION OR OTHER POTENTIAL CONSTRUCTION RELATED CAUSES.

6. SILT FENCES. SILT FENCES SHALL BE INSTALLED AND MAINTAINED AROUND ALL CLEARING PERIMETERS.

7. SITE CLEARING. AREAS INDICATED SHALL BE COMPLETELY CLEAR OF ALL TIMBER, BRUSH, STUMPS, ROOTS, GRASS, WEEDS, RUBBISH AND ALL OTHER DEBRIS AND OBSTRUCTIONS RESTING ON OR PROTRUDING THROUGH THE SURFACE OF THE GROUND. THIS DEBRIS SHALL BE DISPOSED OF IN A LEGAL MANNER. BURNING OF THIS MATERIAL IS NOT PERMITTED UNLESS THE CONTRACTOR OBTAINS SPECIFIC PERMITS ALLOWING SUCH ACTIVITY.

GEOMETRIC, SIGNING, AND STRIPING NOTES:

1. DIMENSIONS. ALL DIMENSIONS TO EDGE OF PAVEMENT OR FACE OF CURB UNLESS OTHERWISE NOTED.

2. REFERENCES. WORK SHALL BE PERFORMED IN ACCORDANCE WITH THE FLORIDA DEPARTMENT OF TRANSPORTATION (FDOT) STANDARD SPECIFICATIONS FOR ROAD AND BRIDGE CONSTRUCTION (LATEST EDITION), FDOT TRAFFIC DESIGN STANDARDS (LATEST EDITION), MANUAL ON UNIFORM TRAFFIC CONTROL DEVICES (MUTCD) (LATEST EDITION), CITY OF LAKE WORTH BEACH STANDARDS AND PALM BEACH COUNTY TYPICALS FOR PAVEMENT MARKINGS, SIGNING & GEOMETRICS, LATEST EDITION. ALL REFERENCES ARE INCORPORATED INTO THE PLAN DOCUMENTS. CONTRACTOR IS RESPONSIBLE FOR OBTAINING COMPLETE COPIES OF THE LATEST EDITION OF THE REFERENCES.

3. ROADWAY STRIPING. ALL ROADWAY STRIPING SHALL BE THERMOPLASTIC IN ACCORDANCE WITH THE RESPECTIVE JURISDICTIONAL AUTHORITY REQUIREMENTS.

4. BUILDING TIES. BUILDING TIES SHOWN ARE APPROXIMATE. CONTRACTOR TO VERIFY WITH ARCHITECTURAL PLANS. BUILDINGS SHOWN ON THESE DRAWINGS MAY NOT REFLECT MINOR ARCHITECTURAL REVISIONS AND SHOULD NOT BE RELIED UPON FOR STAKING OF BUILDINGS. CONTRACTOR SHOULD OBTAIN LATEST ARCHITECTURAL INFORMATION AND ESTABLISH GEOMETRIC DATA FOR STAKING. SHOULD THE CONTRACTOR IDENTIFY A CONFLICT BETWEEN THE ARCHITECTURAL INFORMATION AND THESE DRAWINGS, NOTIFY THE ENGINEER IN WRITING.

5. DIMENSIONS. DIMENSIONS SHOWN ARE FOR REFERENCE LINEWORK PROVIDED BY OTHER CONSULTANTS. FEATURES SHOWN ON THESE DRAWINGS MAY NOT REFLECT REVISIONS BY OTHERS AND SHOULD NOT BE SOLEY RELIED UPON FOR STAKING. SHOULD THE CONTRACTOR IDENTIFY A CONFLICT BETWEEN OTHER DISCIPLINES AND THESE DRAWINGS, NOTIFY THE ENGINEER AND OWNER IN WRITING.

6. MAINTENANCE OF TRAFFIC. CONTRACTOR SHALL BE RESPONSIBLE FOR FURNISHING A PROPER TRAFFIC MAINTENANCE AND CONTROL PLAN IN ACCORDANCE WITH REGULATORY STANDARDS. INCLUDED WILL BE THE LABOR, EQUIPMENT AND MATERIALS REQUIRED TO IMPLEMENT THAT PLAN. ALL WORK MUST BE DONE IN ACCORDANCE WITH AGENCY REQUIREMENTS AND ANY REQUIRED PERMITS OR APPROVALS MUST BE APPLIED FOR AND OBTAINED BY THE CONTRACTOR.

PAVING, GRADING, AND DRAINAGE NOTES:

1. REFERENCES. WORK SHALL BE PERFORMED IN ACCORDANCE WITH THE FLORIDA DEPARTMENT OF TRANSPORTATION (FDOT) STANDARD SPECIFICATIONS FOR ROAD AND BRIDGE CONSTRUCTION, LATEST EDITION, AND FDOT ROADWAY TRAFFIC DESIGN STANDARDS, LATEST EDITION. ALL FDOT INDICES ARE INCORPORATED AS PLAN REFERENCES. CONTRACTOR IS RESPONSIBLE FOR OBTAINING COMPLETE COPIES OF THE LATEST EDITION OF THE FDOT INDICES.

2. SITE FAMILIARIZATION. PRIOR TO BID PREPARATION, THE CONTRACTOR MUST BECOME FAMILIAR WITH THE OVERALL SITE CONDITIONS AND PERFORM ADDITIONAL INVESTIGATIONS AS DETERMINED NECESSARY TO UNDERSTAND THE LIMIT AND DEPTH OF EXPECTED ORGANIC MATERIAL, ADEQUACY OF EXISTING MATERIALS AS FILL, DEWATERING REQUIREMENTS, CLEAN FILL REQUIRED FROM OFFSITE AND MATERIALS TO BE DISPOSED OF OFFSITE. ANY DELAY, INCONVENIENCE OR EXPENSE CAUSED TO THE CONTRACTOR DUE TO INADEQUATE INVESTIGATION OF EXISTING CONDITIONS SHALL BE INCIDENTAL TO THE CONTRACT AND NO EXTRA COMPENSATION WILL BE ALLOWED. THE MATERIALS ANTICIPATED TO BE ENCOUNTERED DURING CONSTRUCTION MAY REQUIRE DRYING PRIOR TO USE AS BACKFILL AND THE CONTRACTOR MAY HAVE TO IMPORT MATERIALS, AT NO EXTRA COST, FROM OFFSITE TO MEET THE REQUIREMENTS FOR COMPACTION AND PROPER FILL.

3. SITE FILL BALANCE. IT IS THE CONTRACTOR'S RESPONSIBILITY TO DETERMINE EXISTING SITE CONDITIONS OF SOIL DURING THE BID PREPARATION TO DETERMINE IF ANY OFF SITE MATERIALS WILL NEED TO BE IMPORTED TO ACHIEVE THE GRADES SPECIFIED ON THE PLANS.

4. RESTORATION. ALL DISTURBED AREAS SHALL BE RESTORED TO PRE-CONSTRUCTION CONDITION OR BETTER AS DETERMINED BY THE ENGINEER, OWNER AND RESPECTIVE JURISDICTIONAL AUTHORITY.

5. HORIZONTAL CONTROL AND LAYOUT. CONTRACTOR/OWNER SHALL COORDINATE WITH A REGISTERED SURVEYOR TO LAY OUT LINE, GRADES, STRUCTURES, LOT CORNERS, ETC. AS NECESSARY TO CONSTRUCT THE PROPOSED FACILITIES IN ACCORDANCE WITH THE PLANS AND SPECIFICATIONS. BENCH MARKS SHALL BE ESTABLISHED BY A REGISTERED SURVEYOR. BENCH MARKS SHALL BE PERMANENT AND EASILY ACCESSIBLE AND MAINTAINED AND REPLACED IF DISTURBED OR DESTROYED. HORIZONTAL CONTROL SHALL SIMILARLY BE ESTABLISHED AND MAINTAINED.

6. CLEARING, GRADING AND DISPOSAL. CLEARING AND GRADING SHALL CONFORM TO SECTION 110 OF THE FDOT STANDARD SPECIFICATIONS FOR ROAD AND BRIDGE CONSTRUCTION, LATEST EDITION. CLEARING SHALL BE CONTAINED TO THE CONSTRUCTION AREA AND/OR AS DIRECTED BY THE OWNER AND/OR HIS REPRESENTATIVE. ALL ROOTS, STUMPS, OR OTHER OBSTRUCTIONS SHALL BE REMOVED TO A DEPTH OF 18" BELOW NATURAL GRADE OR DESIGN GRADE WHICHEVER IS LOWER. ALL DEBRIS SHALL BE REMOVED FROM THE AREA AND BE DISPOSED OF LEGALLY.

7. EXCAVATION AND EMBANKMENT. ALL EXCAVATION AND EMBANKMENT SHALL CONFORM TO THE FDOT STANDARD SPECIFICATIONS FOR ROAD AND BRIDGE CONSTRUCTION, LATEST EDITION.

8. EARTHWORK. NO SEPARATE PAYMENT SHALL BE PROVIDED TO THE CONTRACTOR FOR EARTHWORK ASSOCIATED WITH THIS CONTRACT. ALL COSTS ASSOCIATED WITH SITE PREPARATION NECESSARY TO EXECUTE THE WORK SET FORTH IN THE CONTRACT SHALL BE INCLUDED IN THE BID.

9. EXCESS MATERIAL. ANY EXCESS MATERIAL REMAINING UPON COMPLETION OF CONSTRUCTION SHALL BE REMOVED TO AN ACCEPTABLE LOCATION AT THE EXPENSE OF THE CONTRACTOR. AT THE OWNER'S OPTION, A LOCATION MAY BE IDENTIFIED FOR MATERIAL STOCK PILING OR THE OWNER MAY INSTRUCT THE CONTRACTOR TO REMOVE THE EXCESS MATERIAL IN WHICH CASE THE CONTRACTOR IS TO LEGALLY DISPOSE OF ALL MATERIALS OFFSITE.

10. FINISHED SITE GRADING. THE CONTRACTOR SHALL BE RESPONSIBLE FOR FINAL GRADING OF THE SITE TO WITHIN ±0.1 FOOT OF ALL THE PROPOSED FINISHED GRADE ELEVATIONS THROUGHOUT THE PROJECT SITE AS DEPICTED ON THE PLANS. ELEVATIONS OF CONSTRUCTED FACILITIES, I.E. ROADWAYS, DRAINAGE, ETC. ARE TO BE AS INDICATED ON THE PLANS UNLESS APPROVED DIFFERENTLY IN WRITING.

11. BUILDING AREAS. ALL ORGANIC AND OTHER UNSUITABLE MATERIAL IN BUILDING OR PAVEMENT AREAS SHALL BE REMOVED AND REPLACED IN ACCORDANCE WITH THE GEOTECHNICAL REPORT RECOMMENDATIONS AND SOUND CONSTRUCTION PRACTICES.

12. LANDSCAPE AREAS. ALL LANDSCAPE AREAS SHALL CONTAIN SUITABLE LANDSCAPE MATERIAL FOR LANDSCAPE INSTALLATION. ALL LANDSCAPE AREAS SHALL BE SUITABLY SLOPED TO PROVIDE POSITIVE DRAINAGE.

13. SOD AREAS. ELEVATIONS OF GRASSED AREAS ARE GIVEN AT FINISHED SOD/SEED GRADE. CONTRACTOR TO GRADE AREAS RECEIVING SOD LOWER TO ACCOMMODATE SOD THICKNESS.

14. UNSUITABLE MATERIALS. WHERE ENCOUNTERED, UNSUITABLE MATERIAL SHALL BE REMOVED TO A DEPTH AND AREA DETERMINED BY THE ENGINEER. BACKFILLING SHALL BE IN LAYERS NOT GREATER THAN 8" THICKNESS AND COMPACTED TO 98 PERCENT OF MAXIMUM DENSITY AS DETERMINED BY AASHTO T-180. ANY UNSTABLE SOIL AND/OR SOIL CONTAINING ORGANIC MATERIAL ENCOUNTERED DURING CONSTRUCTION, INCLUDING BUT NOT LIMITED TO MUCK, SILT, SLUDGE, AND MARL SHALL BE REMOVED AND SHALL BE REPLACED BY MATERIAL ACCEPTABLE TO THE ENGINEER. IF ANY ROCK, HARDPAN, ETC. IS ENCOUNTERED DURING CONSTRUCTION OF ANY ITEMS, THE REMOVAL AND BACKFILL REQUIRED SHALL BE CONSIDERED INCIDENTAL TO CONSTRUCTION OF THAT ITEM AND NO SEPARATE PAYMENT WILL BE MADE.

15. GRADING. GRADING FROM PROPOSED TO EXISTING CONDITIONS SHALL NOT BE STEEPER THAN 3H:1V NOR FLATTER THAN 20H:1V. ALL SWALES AND SLOPES SHALL BE SODDED AFTER GRADING.

16. ELEVATIONS. ELEVATIONS GIVEN ADJACENT TO CURB OR FRONT OF SIDEWALK ARE CONSIDERED EDGE OF PAVEMENT GRADES UNLESS OTHERWISE NOTED.

17. POSITIVE DRAINAGE. CONTRACTOR IS RESPONSIBLE FOR GRADING ALL PAVEMENT TO DRAIN POSITIVELY. INTERSECTIONS SHALL BE TRANSITIONED TO PROVIDE A SMOOTH DRIVING SURFACE WHILE MAINTAINING POSITIVE DRAINAGE. SHOULD AREAS OF POOR DRAINAGE BE OBSERVED, THE CONTRACTOR SHALL NOTIFY THE ENGINEER PRIOR TO PLACEMENT OF CURBS OR PAVEMENT COURSES, SO THAT RECOMMENDATIONS FOR CORRECTION CAN BE MADE.

18. ADA AREAS. PAVEMENT GRADES AT HANDICAP PARKING SPACES SHALL NOT EXCEED 2% IN ANY DIRECTION. PROPOSED AND EXISTING SIDEWALKS SHALL BE RAMPED FLUSH WITH PAVEMENT. RAMPS SHALL NOT EXCEED A 12H:1V SLOPE. SIDEWALK RAMPS SHALL BE TEXTURED IN CONFORMANCE WITH FDOT STANDARDS EXCEPT WHERE LOCAL CODES DICTATE OTHERWISE OR IF INDICATED OTHERWISE ON THE PLANS. CONTRACTOR SHALL COORDINATE WITH THE ENGINEER AND THE JURISDICTIONAL AUTHORITY FOR FORM BOARD AND PRE-POUR INSPECTIONS PRIOR TO ANY CONCRETE INSTALLATION. IT IS THE CONTRACTOR'S SOLE RESPONSIBILITY TO ENSURE THAT ALL RAMP TEXTURED SURFACES AND SIDEWALK LONGITUDINAL AND CROSS SLOPES ARE IN CONFORMANCE WITH LOCAL, STATE AND FEDERAL ADA AND BUILDING CODE STANDARDS.

19. ASPHALT MIX DESIGN. BEFORE CONSTRUCTION OF ASPHALT SURFACE, A JOB MIX FORMULA SHALL BE SUBMITTED FOR APPROVAL TO THE ENGINEER.

20. ROADWAY CONSTRUCTION. ALL ROADWAY CONSTRUCTION AND MATERIAL SHALL CONFORM TO THE APPLICABLE FDOT STANDARD SPECIFICATIONS FOR ROAD AND BRIDGE CONSTRUCTION, LATEST EDITION. ALL SUBBASE, BASE COURSE, PRIME COAT, TACK COAT AND ASPHALT MATERIALS SHALL BE INSTALLED IN ACCORDANCE WITH FDOT STANDARD SPECIFICATIONS (LATEST EDITION).

21. DRAINAGE STRUCTURES. ALL PRECAST DRAINAGE STRUCTURES SHALL BE CONSTRUCTED AS PER THE PLANS AND IN ACCORDANCE WITH FDOT STANDARD SPECIFICATIONS FOR ROAD AND BRIDGE CONSTRUCTION (LATEST EDITION). ALL GRATES SHALL BE SECURED TO THE DRAINAGE STRUCTURE WITH A CHAIN AND EYEBOLT.

22. PIPE LENGTHS. PIPE LENGTHS SHOWN ON THE PLANS REPRESENT SCALED DISTANCES BETWEEN CENTERLINES OF DRAINAGE STRUCTURES AND FROM INVERTS OF ENDWALLS AND/OR MITERED END SECTIONS.

23. PIPE INSTALLATION. PIPE TRENCH SHALL BE DRY WHILE PIPE IS BEING LAID AND TO BE BEDDED PER DETAIL AND IN CONFORMANCE WITH THE FDOT STANDARD SPECIFICATIONS FOR ROAD AND BRIDGE CONSTRUCTION (LATEST EDITION). ALL CORRUGATED PIES SHALL BE INSTALLED WITH MAXIMUM LENGTHS IN ORDER TO MINIMIZE JOINTS.

24. PIPE TRENCHES. PIPE TRENCHES TO BE EXCAVATED AND BACKFILLED IN ACCORDANCE WITH FDOT STANDARD SPECIFICATIONS FOR ROAD AND BRIDGE CONSTRUCTION (LATEST EDITION).

25. DRAINAGE PIPING. ALL DRAINAGE PIPES TO BE REINFORCED CONCRETE (RCP) UNLESS NOTED OTHERWISE ON THE PLANS. REQUIRED PIPE THICKNESS IN COMPLIANCE WITH ACPA STANDARDS AND ACTM C76.

26. REINFORCED CONCRETE PIPE (RCP). REINFORCED CONCRETE PIPE (RCP) SHALL BE PER ASTM C-76 CLASS III, UNLESS OTHERWISE SPECIFIED. INSTALLATION OF RCP SHALL BE IN ACCORDANCE WITH FDOT SPECIFICATIONS (LATEST EDITION).

27. DRAINAGE CONNECTIONS. CONTRACTOR SHALL BE RESPONSIBLE FOR REMOVAL OF DEBRIS AND SILT WHERE CONNECTIONS TO EXISTING DRAINAGE STRUCTURES OR SWALES ARE TO BE PERFORMED. SWALES, DITCHES, LAKES, ETC. SHALL BE RESTORED TO THEIR ORIGINAL DESIGN SECTION AND SODDED. SUCH REMOVAL AND RESTORATION SHALL BE TO THE POINT OF LEGAL POSITIVE OUTFALL.

28. DRAINAGE JOINT WRAPPING. ALL DRAINAGE PIPE JOINTS TO BE WRAPPED IN FILTER FABRIC PER FDOT INDEX 350-001. THE FIRST JOINT OF PIPE ENTERING OR LEAVING A DRAINAGE STRUCTURE SHALL BE WRAPPED WITH FILTER FABRIC PER FDOT SPECIFICATIONS.

29. DRAINAGE LAMPING. ALL DRAINAGE SYSTEMS SHALL BE PUMPED DOWN BELOW ONE-THIRD OF THE DIAMETER OF THE PIPE (FROM THE INVERT) AND LAMPED AS A REQUIREMENT OF THE FINAL DRAINAGE INSPECTION.

30. SUBGRADE. SUBBASE SHALL BE FREE OF MUCK, STUMPS, ROOTS, UNDERBRUSH, VEGETATIVE MATTER, GARBAGE, TRASH OR ANY MATERIAL THAT WILL NOT PROVIDE A SUITABLE STABLE, CLEAN SUBGRADE. SUBGRADE SHALL BE AS SHOWN ON THE PLANS AND TO BE COMPACTED TO 98 PERCENT OF THE MAXIMUM DENSITY AS DETERMINED BY AASHTO T-180 UNLESS OTHERWISE NOTED ON THE PLANS.

31. UNDER PAVEMENT UTILITIES AND CONDUITS. THE SEQUENCE OF CONSTRUCTION SHALL BE SUCH THAT ALL UNDERGROUND INSTALLATIONS OF ANY KIND, INCLUDING IRRIGATION AND ELECTRICAL CONDUITS, THAT WILL REMAIN UNDER THE PROPOSED PAVEMENT OR WITHIN 10 FEET OF ITS EDGES SHALL BE INSTALLED PRIOR TO CONSTRUCTION OF THE BASE.

32. UTILITIES BY OTHERS. THE CONTRACTOR SHALL PROVIDE ACCESS AND ALLOW FOR COORDINATION SERVICES TO ACCOMMODATE UTILITIES, CONDUIT AND/OR SLEEVE CONSTRUCTION BY OTHERS. ANY UTILITIES, CONDUITS AND/OR SLEEVES INSTALLED BY OTHERS AND DAMAGED BY THE CONTRACTOR SHALL BE REPAIRED AT THE CONTRACTOR'S EXPENSE.

33. BASE. BASE SHALL BE AS SHOWN ON SECTION AND SHALL BE COMPACTED TO 98 PERCENT OF THE MAXIMUM DENSITY AS DETERMINED BY AASHTO T-180 UNLESS OTHERWISE NOTED ON THE PLANS.

34. ASPHALT TACK AND PRIME COATS. PRIME COAT SHALL BE APPLIED AT THE RATE OF 0.15 GALLONS PER SQUARE YARD. WHERE REQUIRED, TACK SHALL BE APPLIED AT THE RATE OF 0.08 GALLONS PER SQUARE YARD.

35. UTILITIES BY OTHERS. AT NO ADDITIONAL COST TO THE OWNER, THE CONTRACTOR SHALL PROVIDE ACCESS AND ALLOW FOR COORDINATION SERVICES TO ACCOMMODATE UTILITIES, CONDUIT AND/OR SLEEVE CONSTRUCTION BY OTHERS. ANY UTILITIES, CONDUITS AND/OR SLEEVES INSTALLED BY OTHERS AND DAMAGED BY THE CONTRACTOR SHALL BE REPAIRED AT THE CONTRACTOR'S EXPENSE.

36. CURB TRANSITIONS. ALL EXPOSED ENDS OF CURB SHALL TRANSITION TO FINISHED GRADE.

37. CONCRETE. ALL CONCRETE SHALL BE 3,000 PSI CONCRETE (MINIMUM 28 DAY COMPRESSIVE STRENGTH) UNLESS OTHERWISE SPECIFIED.

38. REINFORCING STEEL. ALL REINFORCING STEEL SHALL CONFORM TO ASTM A-615 AND HAVE A TENSILE STRENGTH OF 60,000 PSI OR AS OTHERWISE NOTED.

39. FIELD REVIEWS. FIELD REVIEWS OF CONSTRUCTED FACILITIES WILL BE REQUIRED DURING THE CONSTRUCTION PROCESS. THE CONTRACTOR IS TO NOTIFY THE ENGINEER A MINIMUM OF 48 HOURS PRIOR TO THE REQUESTED TIME FOR REVIEW OF THE COMPLETED ITEMS. CONTRACTOR TO PROVIDE ALL LABOR, EQUIPMENT AND MATERIALS NECESSARY TO ACCOMMODATE THE FIELD REVIEW. THESE REVIEWS INCLUDE BUT ARE NOT LIMITED TO:
    - 39.1. DRAINAGE PIPE AND STRUCTURE REVIEW
    - 39.2. SUBGRADE REVIEW
    - 39.3. CURB REVIEWS
    - 39.4. BASE REVIEWS
    - 39.5. PUMP OUT AND LAMPING OF DRAINAGE SYSTEM
    - 39.6. SEMI-FINAL AND FINAL REVIEWS

40. COMPLETENESS FOR REVIEW. FACILITIES MUST BE COMPLETED PRIOR TO SCHEDULING THE FIELD REVIEW. IF A FIELD REVIEW FAILS TO MEET THE AGENCY REQUIREMENTS AND AN ADDITIONAL REVIEW IS REQUIRED, THE CONTRACTOR WILL BE RESPONSIBLE TO PAY ANY FEES ASSOCIATED WITH THE ADDITIONAL REVIEW.

41. TESTING. TESTING OF CONSTRUCTION MATERIALS AND/OR CONSTRUCTED FACILITIES WILL BE REQUIRED AS OUTLINED IN THE GOVERNING SPECIFICATIONS AS NECESSARY TO MEET THE REQUIREMENTS OF THE JURISDICTIONAL AGENCIES. ALL TESTING IS TO BE DONE BY A FLORIDA LICENSED TESTING LABORATORY. THE CONTRACTOR IS TO SUBMIT ALL REQUIRED TESTS ON UTILITY EMBANKMENT, BACKFILL, SUBGRADE, BASE AND SURFACE COURSE MATERIAL TO THE ENGINEER PRIOR TO ANY REQUEST FOR PAYMENT. IF ANY TESTS FAIL TO MEET THE SPECIFICATIONS, THE CONTRACTOR, SHALL CORRECT ALL DEFICIENT WORK AND SUBMIT TEST RESULTS INDICATING COMPLIANCE WITH THESE SPECIFICATIONS PRIOR TO ANY REQUEST FOR PAYMENT.

42. DENSITY TESTING. THE CONTRACTOR SHALL BE RESPONSIBLE FOR OBTAINING THE NECESSARY TESTING TO ASSURE THAT THE PROPER COMPACTION HAS BEEN ACHIEVED ON THE SUBGRADE, BASE MATERIAL, PIPE BASE MATERIAL AND ALL OTHER PERTINENT AREAS THAT HAVE BEEN COMPLETED. THE CONTRACTOR SHALL PROVIDE THE OWNER AND THE ENGINEER COPIES OF ALL TEST RESULTS. ALL REPORTS ARE TO BE SIGNED AND SEALED BY A REGISTERED GEOTECHNICAL ENGINEER IN THE STATE OF FLORIDA.

43. VERTICAL DISTRIBUTION OF DENSITY TESTING. NUCLEAR DENSITY COMPACTION TESTS ARE TO BE TAKEN ON EVERY LIFT PLACED (12" MAXIMUM THICKNESS), STARTING WITH THE SOIL AT THE SPRINGLINE OF THE UTILITY OR AT THE BASE OF ANY STRUCTURE AND PROCEEDING UPWARD TO GRADE AT THE LOCATIONS DEFINED BY THE HORIZONTAL DISTRIBUTION OF DENSITY TESTING NOTE. IF THICKER LIFTS ARE APPROVED AND IMPLEMENTED, DENSITY TESTING SHALL BE PERFORMED VIA DIG DOWNS TO SUFFICIENT DEPTH TO TEST EACH 12 INCHES FOR THE FULL THICKNESS OF LIFT.

44. HORIZONTAL DISTRIBUTION OF DENSITY TESTING. DENSITY TESTING SHALL BE PERFORMED AT THE FOLLOWING MINIMUM LOCATIONS WITH HORIZONTAL SPACING PER THE VERTICAL DISTRIBUTION OF DENSITY TAKING NOTE. MORE SPECIFICALLY:
    - A. PIPE TRENCHES - TESTS SHALL BE PERFORMED AT RANDOMLY SELECTED LOCATIONS WITHIN EACH 300 FOOT INTERVAL (MAXIMUM) ALONG THE LENGTH OF A PIPE INSTALLATION, AND BETWEEN EACH SET OF STRUCTURES SEPARATED BY LESS THAN 300 FEET. AT LEAST ONE TEST SHALL BE PERFORMED FOR EVERY 12 INCH BACKFILL LAYER, STARTING WITH THE FIRST TEST PERFORMED AT THE PIPE SPRINGLINE (COVERING THE 12" LAYER BELOW SPRINGLINE ELEVATION).
    - B. STRUCTURES - TESTS SHALL BE PERFORMED AT EACH MANHOLE OR DRAINAGE STRUCTURE. AT LEAST ONE TEST SHALL BE PERFORMED FOR EVERY 12 INCH BACKFILL LIFT, STARTING WITH THE FIRST TEST PERFORMED AT THE BASE OF THE STRUCTURE (COVERING THE 12" LAYER BELOW BASE ELEVATION).
    - C. SUBGRADE - TESTS SHALL BE PERFORMED AT RANDOMLY SELECTED LOCATIONS WITHIN EACH 300 FOOT INTERVAL (MAXIMUM) ALONG THE LENGTH OF THE ROADWAY, SIDEWALK, OR PATHWAY AND EVERY 6,000 SQUARE FEET OF PARKING AREA.
    - D. BASE ROCK - TESTS SHALL BE PERFORMED AT RANDOMLY SELECTED LOCATIONS WITHIN EACH 300 FOOT INTERVAL (MAXIMUM) ALONG THE LENGTH OF THE ROADWAY, SIDEWALK, OR PATHWAY AND EVERY 6,000 SQUARE FEET OF PARKING AREA.
    - E. ROAD CROSSINGS - TESTS SHALL BE PERFORMED FOR EACH 12 INCH LIFT WITHIN ANY OPEN CUT ROAD CROSSING LOCATION.

WATER AND SANITARY SEWER NOTES:

1. AVAILABILITY OF SYSTEMS FOR ASBUILT MEASUREMENTS. CONTRACTOR SHALL BE RESPONSIBLE FOR MAKING ALL WATER MAIN BENDS, VALVES, HYDRANTS, TEES AND WATER SERVICE TAPS AVAILABLE TO FACILITATE DIRECT PHYSICAL MEASUREMENT OF RECORD DRAWING INFORMATION. THE CONTRACTOR SHALL COORDINATE WITH THE OWNER, ENGINEER AND SURVEYOR TO OBTAIN RECORD DRAWING MEASUREMENTS SO AS NOT TO ENDANGER THE GENERAL PUBLIC OR CREATE DELAY IN THE PROGRESS OF THE PROJECT. CONTRACTOR SHALL PROVIDE 48 HOURS MINIMUM WRITTEN NOTICE.

2. SYSTEM CLEANING. CONTRACTOR SHALL THOROUGHLY CLEAN ALL SANITARY AND DRAINAGE GRAVITY SYSTEMS TO FACILITATE MEASUREMENT OF RECORD DRAWING INFORMATION. CLEANING SHALL BE PERFORMED PRIOR TO "PRE-LAMPING" INSPECTIONS BY ENGINEER. CONTRACTOR SHALL ALSO HAVE ALL MANHOLE RIMS INSTALLED PRIOR TO PRE-LAMPING.

3. WATER MAINS. ALL WATER MAINS TO BE PVC C-900 UNLESS OTHERWISE NOTED ON THE PLANS. ALL LINES FROM THE WATER MAIN TO A FIRE HYDRANT TO BE DUCTILE IRON PIPE (DIP) UNLESS OTHERWISE NOTED ON THE PLANS.

4. WATER SERVICE LINES. ALL WATER SERVICE LINES TO BE PVC SCHEDULE 40 UNLESS NOTED OTHERWISE ON THE PLANS.

5. SANITARY SEWER LINES. ALL SANITARY SEWER GRAVITY MAINS LESS THAN 12' IN DEPTH TO BE PVC SDR 26 UNLESS NOTED OTHERWISE ON PLANS.

6. MINIMUM PIPE DEPTHS. ALL PRESSURE PIPE TO BE INSTALLED AT MIN. 30" COVER FROM FINISHED GRADE.

7. VALVES. ALL VALVES ARE TO BE CONSTRUCTED COMPLETELY IN GRASSED AREAS UNLESS SHOWN OTHERWISE ON THE PLANS. NO VALVES SHALL BE CONSTRUCTED WITHIN THE SIDEWALK, CURB OR PARKING STALLS.

8. EXISTING UTILITIES IMPACTED. ALL EXISTING VALVES AND MANHOLES IMPACTED BY CONSTRUCTION OF THIS PROJECT SHALL BE ADJUSTED IN ACCORDANCE WITH THE UTILITY SPECIFICATIONS.

9. FIELD VERIFICATION. PRIOR TO CONSTRUCTION, IT IS THE RESPONSIBILITY OF THE CONTRACTOR TO FIELD VERIFY (ELEVATION & LOCATION) ALL EXISTING UTILITIES. ANY DISCREPANCIES SHALL BE BROUGHT TO THE ATTENTION OF THE ENGINEER PRIOR TO CONTINUATION OF WORK.

10. PIPE COLOR INFUSION. ALL WATER MAINS (BLUE), FORCE MAINS (GREEN) AND RECLAIM WATER MAINS (PURPLE) SHALL BE PVC C-900 COLORED DURING INFUSION PROCESS, UNLESS A DIFFERENT MATERIAL IS OTHERWISE NOTED.

11. MAGNETIC TAPE. MAGNETIC TAPE IS REQUIRED FOR PVC WATER MAINS, FORCE MAINS, AND RECLAIM WATER MAINS AND SHALL BE 6" WIDE, IMPRINTED WITH 2" HIGH LETTERING READING "CAUTION - WATER MAIN BURIED BELOW", "CAUTION - FORCE MAIN BURIED BELOW" OR "CAUTION - RECLAIM WATER MAIN BURIED BELOW", AS REQUIRED.

12. TESTING. PRESSURE TESTING AND CERTIFICATION SHALL FOLLOW THE CITY OF LAKE WORTH BEACH MINIMUM ENGINEERING AND CONSTRUCTION STANDARDS LATEST EDITION.

13. VERTICAL PIPE SEPARATIONS. ALL WATER MAINS TO CROSS OVER SANITARY SEWER SERVICES. WHERE 18" MINIMUM CLEARANCE CANNOT BE MAINTAINED, 20 LINEAR FEET OF DUCTILE IRON WATER MAIN SHALL BE CENTERED ON THE CROSSING AND THE SEWER SERVICE SHALL BE C-900, SDR-18. IN NO CASE SHALL THERE BE LESS THAN 6" CLEARANCE.

14. RECORD DRAWING NOTE. RECORD DRAWINGS SHALL INCLUDE ALL UTILITY OBJECTS AND ASSOCIATED LOCATIONS IDENTIFIED AS REQUIRED BY THE CITY OF LAKE WORTH BEACH AND SHOWN IN THE AS-BUILT LOCATION.

15. WATER MAIN DUCTILE IRON PIPE (DIP). ALL WATER MAIN DUCTILE IRON PIPE AND PIPE FITTINGS SHALL BE PAINTED WITH A 4" WIDE CONTINUOUS BLUE LINE THAT RUNS PARALLEL TO THE AXIS OF THE PIPE AND THAT IS LOCATED ALONG THE TOP OF THE PIPE. APPROVED PAINT: INDURON, AQUANAUT 5082 ALASKAN BLUE (ONE COAT, 3 MILS DRY FILM THICKNESS APPLIED WITH 1/2" NAP MEDIUM ROLLER).

16. PIPE COLORS. ALL WATER MAIN PIPE, INCLUDING FITTINGS, INSTALLED ON OR AFTER AUGUST 28, 2003, EXCEPT PIPE INSTALLED UNDER A CONSTRUCTION PERMIT FOR WHICH THE DEPARTMENT RECEIVED A COMPLETE APPLICATION BEFORE AUGUST 28, 2003, SHALL BE COLOR CODED OR MARKED USING BLUE AS A PREDOMINANT COLOR TO DIFFERENTIATE DRINKING WATER FROM RECLAIMED OR OTHER WATER. UNDERGROUND PLASTIC PIPE SHALL BE SOLID-WALL BLUE PIPE, SHALL HAVE A CO-EXTRUDED BLUE EXTERNAL SKIN, OR SHALL BE WHITE OR BLACK WITH BLUE STRIPES INCORPORATED INTO, OR APPLIED TO, THE PIPE WALL; AND UNDERGROUND METAL OR CONCRETE PIPE SHALL HAVE BLUE STRIPES APPLIED TO THE PIPE WALL. PIPE STRIPED DURING MANUFACTURING OF THE PIPE SHALL HAVE CONTINUOUS STRIPES THAT RUN PARALLEL TO THE AXIS OF THE PIPE, THAT ARE LOCATED AT NO GREATER THAN 90-DEGREE INTERVALS AROUND THE PIPE, AND THAT WILL REMAIN INTACT DURING AND AFTER INSTALLATION OF THE PIPE. IF TAPE OR PAINT IS USED TO STRIPE PIPE DURING INSTALLATION OF THE PIPE, THE TAPE OR PAINT SHALL BE APPLIED IN A CONTINUOUS LINE THAT RUNS PARALLEL TO THE AXIS OF THE PIPE AND THAT IS LOCATED ALONG THE TOP OF PIPE; FOR PIPES WITH AN INTERNAL DIAMETER OF 24 INCHES OR GREATER, TAPE OR PAINT SHALL BE APPLIED IN CONTINUOUS LINES ALONG EACH SIDE OF THE PIPE AS WELL AS ALONG THE TOP OF THE PIPE. ABOVEGROUND PIPE AT DRINKING WATER TREATMENT PLANTS SHALL BE COLOR CODED AND LABELED IN ACCORDANCE WITH SUBSECTION 62-555.320(10), F.A.C., AND ALL OTHER ABOVEGROUND PIPE SHALL BE PAINTED BLUE OR COLOR CODED OR MARKED LIKE UNDERGROUND PIPE.

CIVIL DESIGN, INC.
Service Driven Design ~ Engineered Results
1400 Centrepark Blvd, Suite 905
West Palm Beach, FL 33401
T: 561.659.5760 F: 561.659.5772
www.civil-design.com
Registry No. 9664

DATUM = NAVD '88
NGVD '29 CONVERSION FACTOR = (+)1.54'

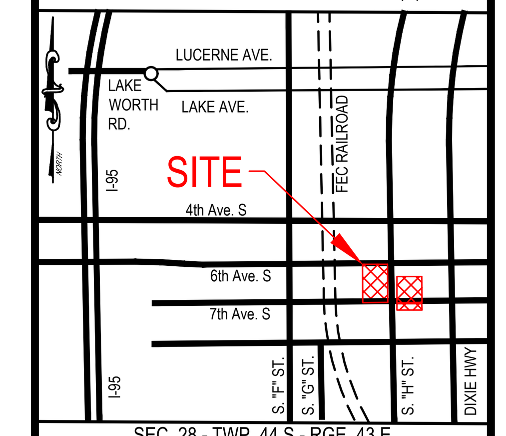

SEC. 28 - TWP. 44 S - RGE. 43 E
LOCATION MAP
N.T.S.

PINNACLE ON SIXTH

LAKE WORTH BEACH, FL

APPROVED BY:

T. Jeff Trompeter, State of Florida, Professional Engineer, License No. 51045. This item has been digitally signed and sealed by T. Jeff Trompeter on the date indicated here. Printed copies of this document are not considered signed and sealed and the signature must be verified on any electronic copies.

CDI PROJECT NO.
26974-01

DATE: 03/30/2026
DESIGNED: CDI
DRAWN: CDI

NO.	DATE	REVISION DESCRIPTION

GENERAL NOTES

C0.1

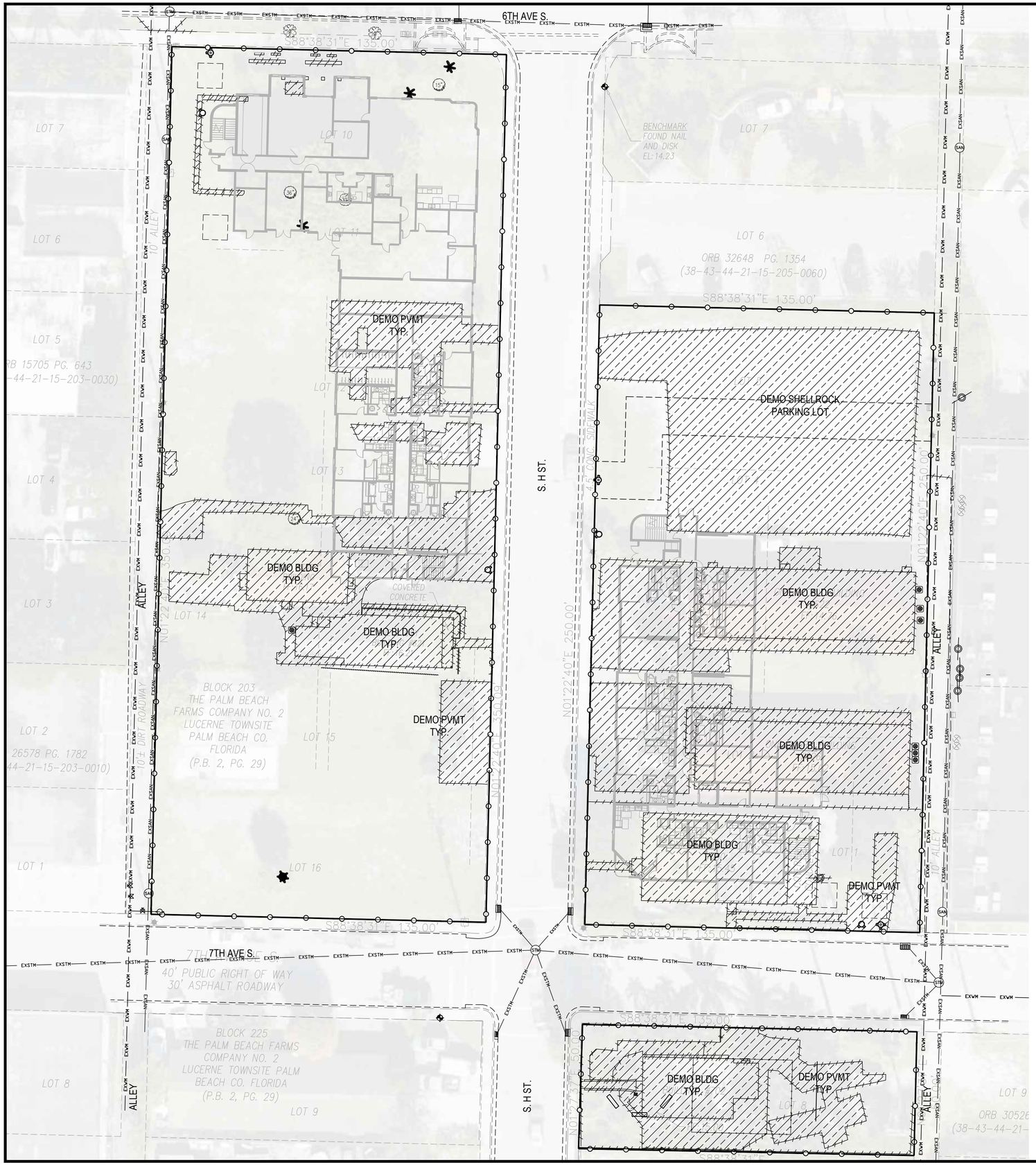

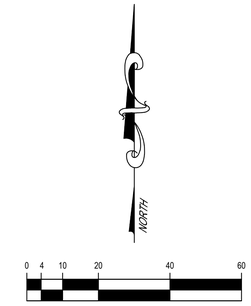

LEGEND

EXISTING WATERMAIN	EXWM
EXISTING SANITARY SEWER	EXSAN
EXISTING STORM DRAINAGE	EXSTM
EXISTING TREES	
EXISTING TO BE REMOVED	
EXISTING TO BE REMOVED	
PROPOSED SILT FENCE	

NOTES:

1. PROTECT ALL EXISTING AND PROPOSED INLETS DURING CONSTRUCTION.
2. SWEEP ROADS AND CONSTRUCTION SITE PERIODICALLY TO REMOVE CONSTRUCTION DEBRIS AND SEDIMENT.
3. STORM DRAINAGE TO BE SEDIMENT AND SILT FREE DURING CONSTRUCTION AND AT FINAL SITE WALK THROUGH.
4. ALL AREAS TO BE DEMOLISHED ARE TO BE REMOVED IN THEIR ENTIRETY. BACKFILL WITH CLEAN, SUITABLE MATERIAL APPROPRIATE TO THE FUTURE APPLICATION AND IN COMPLIANCE WITH THE RESPECTIVE REQUIREMENTS (i.e. STRUCTURAL BUILDING FILL, LANDSCAPE FILL, PARKING LOT SUBGRADE).
5. EXISTING BASEROCK MAY NOT BE REUSED FOR PROPOSED BASE COURSE UNLESS CERTIFIED BY THE GEOTECHNICAL ENGINEER THAT IT MEETS THE REQUIRED SPECIFICATIONS. IT MAY BE USED FOR SUBGRADE STABILIZATION.
6. REFER TO LANDSCAPE PLANS FOR ALL RELOCATION/REMOVAL OF LANDSCAPING AND TREES.
7. IT SHALL BE THE CONTRACTOR'S RESPONSIBILITY TO DETERMINE THE LOCATION, DEPTH AND CONDITION OF ALL EXISTING UNDERGROUND UTILITIES PRIOR TO SHOP DRAWING SUBMITTAL AND/OR COMMENCEMENT OF CONSTRUCTION. PROVIDE WRITTEN CONFIRMATION/DIAGRAMS OF ALL UTILITIES WITHIN THE LIMITS OF CONSTRUCTION OR ANTICIPATED CONSTRUCTION (HORIZONTAL & VERTICAL LOCATIONS, PIPE SIZES, ETC.)
8. IT SHALL ALSO BE THE CONTRACTOR'S RESPONSIBILITY TO PROTECT AND SUPPORT THESE EXISTING UTILITIES AND MAINTAIN CONTINUOUS SERVICE OF ALL UTILITIES DURING THE ENTIRE COURSE OF CONSTRUCTION UNLESS OTHERWISE COORDINATED WITH AND APPROVED BY AFFECTED UTILITY PROVIDERS AND CUSTOMERS.
9. CONTRACTOR IS ADVISED THAT THE EXISTING UTILITIES SHOWN ARE BASED ON SURVEY AND ASBUILT DATA AVAILABLE AT TIME OF DESIGN.

CDI
CIVIL DESIGN, INC.
Service Driven Design – Engineered Results
1400 Centrepark Blvd, Suite 905
West Palm Beach, FL 33401
T: 561.659.5760 F: 561.659.5772
www.civil-design.com
Registry No. 9664

DATUM = NAVD '88
NGVD '29 CONVERSION FACTOR = (+)1.54'

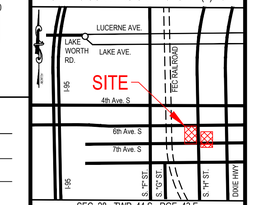

SEC. 28 - TWP. 44 S - RGE. 43 E
LOCATION MAP
N.T.S.

PINNACLE ON SIXTH

LAKE WORTH BEACH, FL

APPROVED BY:

T. Jeff Trompeter, State of Florida, Professional Engineer, License No. 51045. This item has been digitally signed and sealed by T. Jeff Trompeter on the date indicated here. Printed copies of this document are not considered signed and sealed and the signature must be verified on any electronic copies.

CDI PROJECT NO.
26974-01

DATE: 03/30/2026
DESIGNED: CDI
DRAWN: CDI

NO.	DATE	REVISION DESCRIPTION
1	6/10/26	ADDRESS CITY SPRT COMMENTS

SITE DEMOLITION & EROSION CONTROL PLAN

C1.1

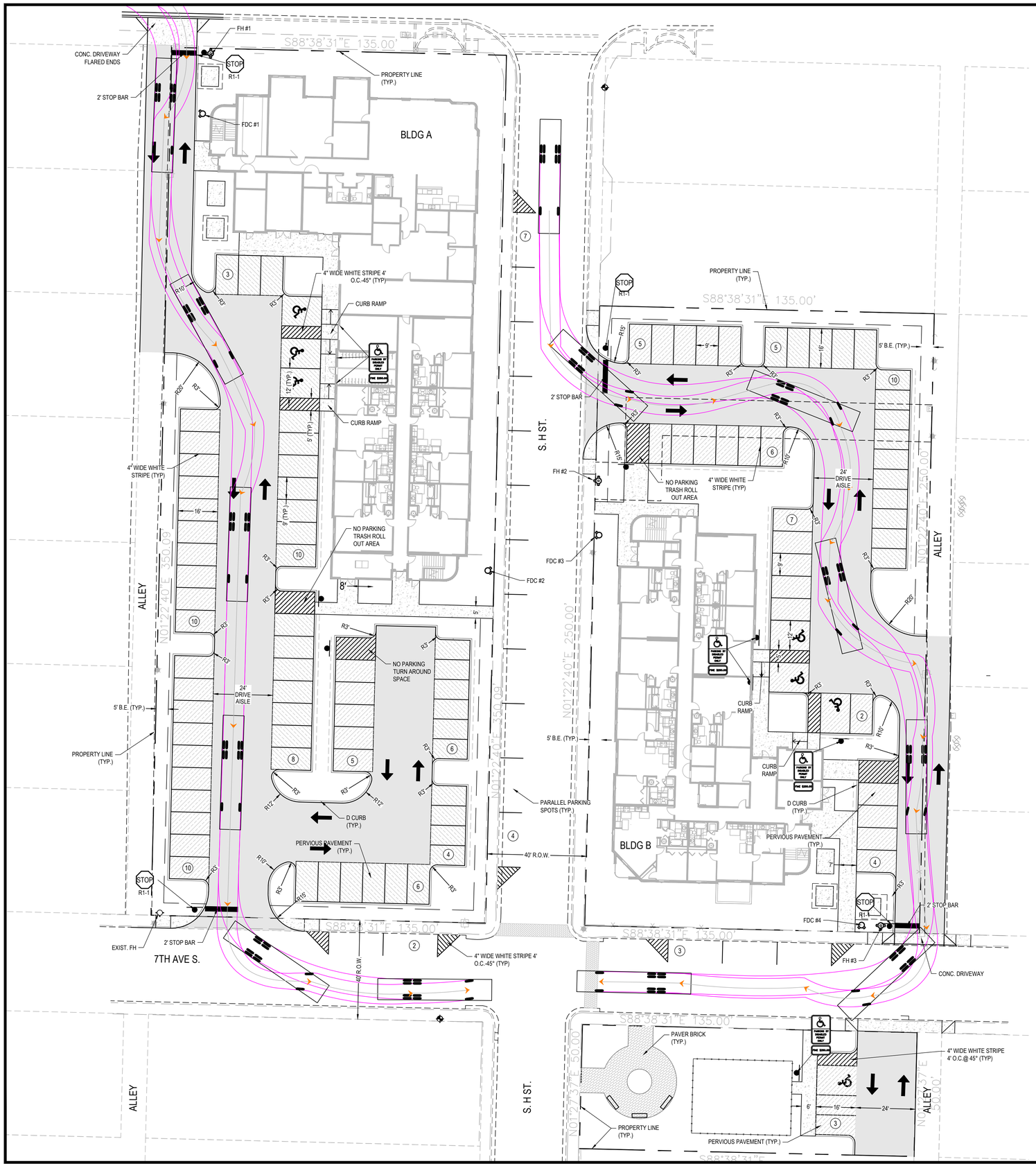

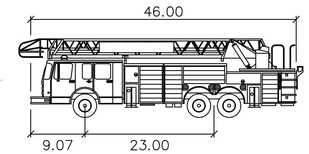

PBC 46'

	feet
Width	: 8.50
Track	: 8.04
Lock to Lock Time	: 6.0
Steering Angle	: 45.0

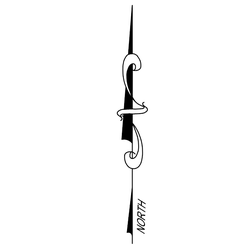

0 4 10 20 40 60

SCALE: 1" = 20'

LEGEND

PROPOSED PAVEMENT / PERVIOUS	
PROPOSED CONCRETE	
PAVER BRICK	
UTILITY EASEMENT	U.E.
BUFFER EASEMENT	B.E.
STOP SIGN & 2' STOP BAR (THERMO.)	
STOP SIGN (R1-1)	STOP R1-1
HANDICAP (FTP-20-06) & $250 FINE SIGN (FTP-22-06)	PARKING BY DISABLED PERMIT ONLY / FINE $250.00
PARKING STALL COUNT	#

ACCESSIBILITY NOTES:

1. ACCESSIBLE ROUTES SHALL BE CONSTRUCTED TO MEET THE REQUIREMENTS OF THE FLORIDA ACCESSIBILITY CODE FOR BUILDING CONSTRUCTION.
2. ALL WALKS CROSSING A VEHICULAR AREA SHALL HAVE DETECTABLE WARNING SURFACE (TRUNCATED DOME) IN ACCORDANCE WITH THE FLORIDA ACCESSIBILITY CODE FOR BUILDING CONSTRUCTION.
3. CURB RAMP SLOPES AND DIMENSIONS SHALL BE IN ACCORDANCE WITH THE FLORIDA DEPARTMENT OF TRANSPORTATION (FDOT) STANDARD INDEX NO. 522. AND 406, 405.2 THROUGH 405.5 & 405.10 OF THE FLORIDA ACCESSIBILITY CODE FOR BUILDING CONSTRUCTION

CDI
CIVIL DESIGN, INC.
Service Driven Design – Engineered Results
1400 Centrepark Blvd, Suite 905
West Palm Beach, FL 33401
T: 561.659.5760 F: 561.659.5772
www.civil-design.com
Registry No. 9664

DATUM = NAVD '88
NGVD '29 CONVERSION FACTOR = (+)1.54'

SEC. 28 - TWP. 44 S - RGE. 43 E
LOCATION MAP
N.T.S.

PINNACLE ON SIXTH

LAKE WORTH BEACH, FL

APPROVED BY:

T. Jeff Trompeter, State of Florida, Professional Engineer, License No. 51045. This item has been digitally signed and sealed by T. Jeff Trompeter on the date indicated here. Printed copies of this document are not considered signed and sealed and the signature must be verified on any electronic copies.

CDI PROJECT NO.
26974-01

DATE:	03/30/2026
DESIGNED:	CDI
DRAWN:	CDI

NO.	DATE	REVISION DESCRIPTION
1	6/10/26	ADDRESS CITY SPRT COMMENTS
2	7/16/26	ADDRESS CITY SPRT COMMENTS

SIGNING, STRIPING & GEOMETRIC PLAN

C2.1

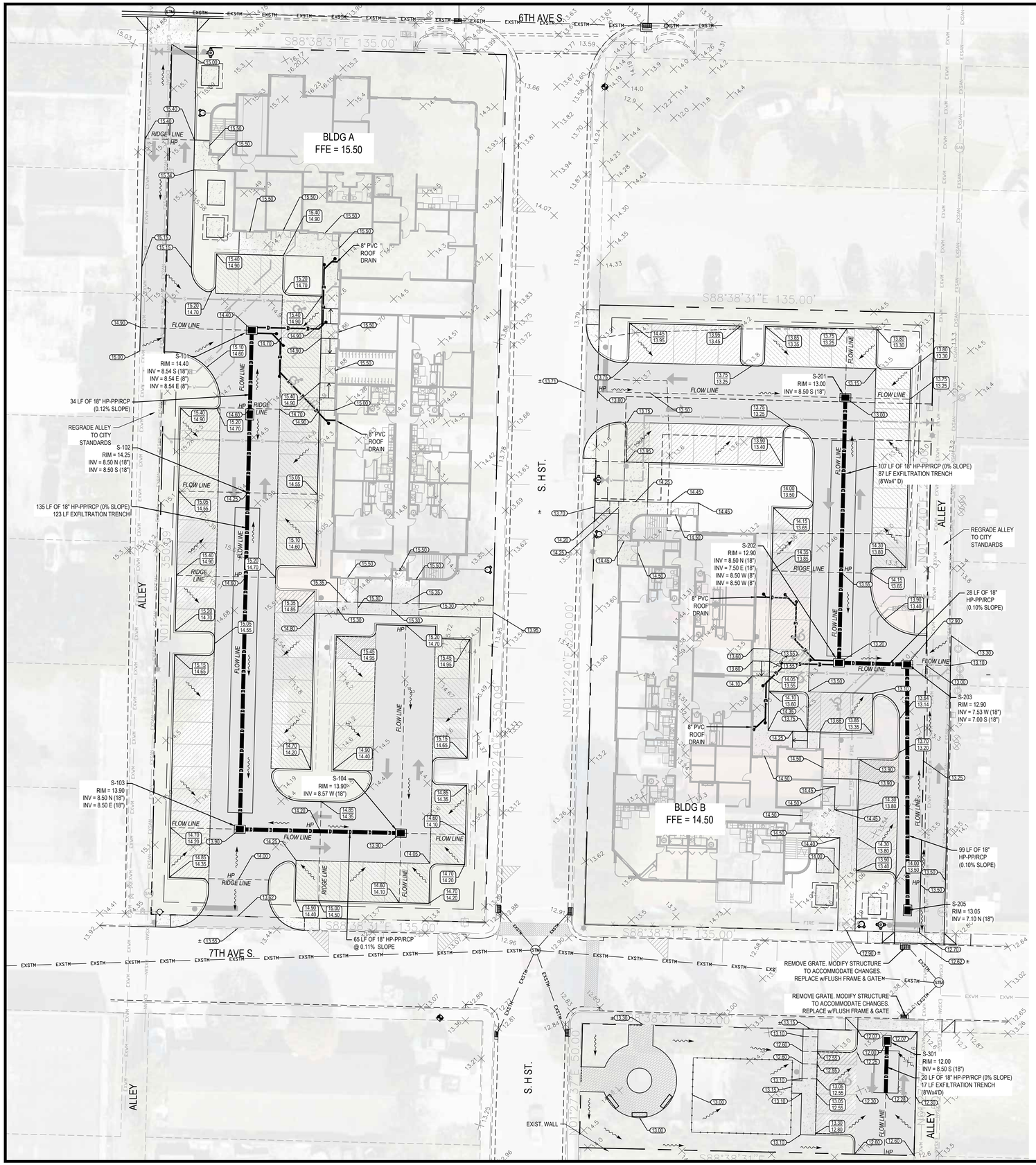

NOTES:

1. ALL DRAINAGE STRUCTURES DESIGNATED U.S.F. 170 MANHOLE LIDS TO BE LABELED "STORM".
2. CONTRACTOR IS ADVISED THAT THE EXISTING UTILITIES SHOWN ARE BASED ON SURVEY AND ASBUILT DATA AVAILABLE AT TIME OF DESIGN.
3. IT SHALL BE THE CONTRACTOR'S RESPONSIBILITY TO DETERMINE THE LOCATION, DEPTH AND CONDITION OF ALL EXISTING UNDERGROUND UTILITIES PRIOR TO SHOP DRAWING SUBMITTAL AND/OR COMMENCEMENT OF CONSTRUCTION. PROVIDE WRITTEN CONFIRMATION/DIAGRAMS OF ALL UTILITIES WITHIN THE LIMITS OF CONSTRUCTION OR ANTICIPATED CONSTRUCTION (HORIZONTAL & VERTICAL LOCATIONS, PIPE SIZES, ETC.)
4. IT SHALL ALSO BE THE CONTRACTOR'S RESPONSIBILITY TO PROTECT AND SUPPORT THESE EXISTING UTILITIES AND MAINTAIN CONTINUOUS SERVICE OF ALL UTILITIES DURING THE ENTIRE COURSE OF CONSTRUCTION UNLESS OTHERWISE COORDINATED WITH AND APPROVED BY AFFECTED UTILITY PROVIDERS AND CUSTOMERS.

NORTH

0 4 10 20 40 60

SCALE: 1" = 20'

LEGEND

- EXISTING WATERMAIN — EXWM
- EXISTING SANITARY SEWER — EXSAN
- EXISTING STORM DRAINAGE — EXSTM
  - STRUCTURE NUMBER: S-100
  - RIM ELEVATION: 00.00 RIM
  - INVERT: 0.00
  - STRUCTURE BOTTOM: 0.00 BOT
- PROPOSED STORM DRAINAGE LINE W/ STORM STRUCTURE
- PROPOSED SANITARY SEWER
- PROPOSED WATERMAIN
- PROPOSED WATER SERVICE
- PROPOSED FIRE LINE — FIRE
- PROPOSED PAVEMENT / PERVIOUS
- PROPOSED CONCRETE
- PAVER BRICK
- EXISTING ELEVATION — +13.46
- PROPOSED ELEVATION — 17.00
- DIRECTION OF FLOW

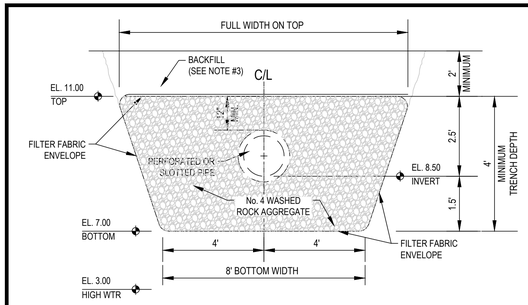

CROSS SECTION

N.T.S

GENERAL NOTES:

1. CONFORM WITH ALL REQUIREMENTS OF FDOT INDEX NO. 285 EXCEPT AS SHOWN ON OR MODIFIED BY THIS DETAIL AND THESE GENERAL NOTES.
2. FILTER FABRIC SHALL BE "MIRAFI" TYPE 160N, AND SHALL CONFORM WITH SECTION 985 OF THE FDOT SPECIFICATIONS. ALL FILTER FABRIC JOINTS SHALL LAP A MINIMUM OF TWO (2) FEET.
3. PROVIDE CLEAN SAND BACKFILL ABOVE EXFILTRATION TRENCH LOCATED UNDER GRASSED AREAS. PROVIDE SELECT BACKFILL IN ACCORDANCE WITH SECTION 443 OF THE FDOT SPECIFICATIONS ABOVE EXFILTRATION TRENCH LOCATED UNDER ROADWAY PAVEMENT OR DRIVEWAY PAVEMENT.

N.T.S.	DETAIL
EXFILTRATION TRENCH DETAIL	1

CDI
CIVIL DESIGN, INC.
Service Driven Design – Engineered Results
1400 Centrepark Blvd, Suite 905
West Palm Beach, FL 33401
T: 561.659.5760 F: 561.659.5772
www.civil-design.com
Registry No. 9664

DATUM = NAVD '88
NGVD '29 CONVERSION FACTOR = (+)1.54'

SEC. 28 - TWP. 44 S - RGE. 43 E
LOCATION MAP
N.T.S.

PINNACLE ON SIXTH

LAKE WORTH BEACH, FL

APPROVED BY:

T. Jeff Trompeter, State of Florida, Professional Engineer, License No. 51045. This item has been digitally signed and sealed by T. Jeff Trompeter on the date indicated here. Printed copies of this document are not considered signed and sealed and the signature must be verified on any electronic copies.

CDI PROJECT NO.
26974-01

DATE: 03/30/2026
DESIGNED: CDI
DRAWN: CDI

NO.	DATE	REVISION DESCRIPTION
1	6/10/26	ADDRESS CITY SPRT COMMENTS
2	7/16/26	ADDRESS CITY SPRT COMMENTS

PAVING & DRAINAGE PLAN

C3.1

GENERAL NOTES

1. EXISTING UTILITIES. THE CONTRACTOR SHALL BE RESPONSIBLE FOR CONTACTING ALL UTILITY COMPANIES AND "SUNSHINE STATE ONE CALL OF FLORIDA, INC." TO LOCATE ALL EXISTING UTILITIES WITHIN THE CONSTRUCTION AREA PRIOR TO CONSTRUCTION. CONTRACTOR SHALL VERIFY THE HORIZONTAL AND VERTICAL LOCATION OF ALL EXISTING UTILITIES PRIOR TO COMMENCING CONSTRUCTION. THE CONTRACTOR SHALL BE RESPONSIBLE FOR PROTECTING ALL EXISTING UTILITIES DURING CONSTRUCTION AND RESETTING UTILITIES TO NEW GRADE AND SLOPE WITHIN THE LIMITS OF CONSTRUCTION.
2. SAFETY. THE CONTRACTOR SHALL BE RESPONSIBLE FOR COMPLYING WITH THE PROVISIONS OF THE FLORIDA TRENCH SAFETY ACT, THE FLORIDA UNDERGROUND FACILITY DAMAGE PREVENTION AND SAFETY ACT, AND ALL APPLICABLE O.S.H.A. REQUIREMENTS. THE CONTRACTOR SHALL BE RESPONSIBLE FOR TAKING ALL NECESSARY PRECAUTIONS WHEN WORKING IN THE VICINITY OF OVERHEAD ELECTRIC LINES.
3. MAINTENANCE OF TRAFFIC. CONTRACTOR SHALL PROVIDE MAINTENANCE OF TRAFFIC (MOT) PLANS, PREPARED BY A WORK SITE TRAFFIC SUPERVISOR AS CERTIFIED BY THE AMERICAN TRAFFIC SAFETY SERVICES ASSOCIATION, PRIOR TO COMMENCING CONSTRUCTION WITHIN CITY OF LAKE WORTH RIGHT-OF-WAY.
4. ACCESS. THE CONTRACTOR SHALL BE RESPONSIBLE FOR MAINTAINING SAFE VEHICULAR AND PEDESTRIAN ACCESS AT ALL TIMES.
5. WARRANTY. ALL WORK, MATERIALS, OR EQUIPMENT SHALL BE WARRANTED FOR A MINIMUM OF ONE YEAR, FROM THE DATE OF FINAL ACCEPTANCE BY THE CITY OF LAKE WORTH, AGAINST DEFECTIVE MATERIALS AND/OR WORKMANSHIP. ALL WORK FOUND TO BE DEFECTIVE WILL BE REPLACED BY THE CONTRACTOR AT NO EXPENSE TO THE CITY OF LAKE WORTH.
6. SHOP DRAWINGS. THE CONTRACTOR SHALL PROVIDE A MINIMUM OF SEVEN (7) COPIES (OR MORE, IF REQUIRED) OF SHOP DRAWINGS, PRODUCT DATA, MATERIAL SPECIFICATIONS AND OTHER INFORMATION REGARDING CONSTRUCTION MATERIALS AND STRUCTURES AS REQUESTED BY THE ENGINEER OF RECORD OR THE CITY OF LAKE WORTH. SHOP DRAWINGS MUST BE NEWLY PREPARED INFORMATION, DRAWN TO ACCURATE SCALE. STANDARD INFORMATION PREPARED WITHOUT SPECIFIC REFERENCE TO THE PROJECT WILL BE RETURNED TO THE CONTRACTOR WITHOUT REVIEW. SHOP DRAWINGS SHALL BE SUBJECT TO THE FOLLOWING:
   A. BY SUBMITTAL OF ANY SHOP DRAWING OR CATALOG DATA, BEARING AN APPROVAL STAMP, THE CONTRACTOR REPRESENTS THAT IT HAS DETERMINED AND VERIFIED ALL FIELD MEASUREMENTS, FIELD CONSTRUCTION CRITERIA, MATERIALS, DIMENSIONS, CATALOG NUMBERS AND SIMILAR DATA, OR WILL DO SO, AND THAT IT HAS CHECKED AND COORDINATED EACH ITEM WITH OTHER APPLICABLE APPROVED SHOP DRAWINGS AND THE CONTRACT REQUIREMENTS.
   B. SHOP DRAWINGS AND CATALOG DATA SUBMITTED WITHOUT THE CONTRACTOR'S STAMP OF APPROVAL WILL BE RETURNED TO THE CONTRACTOR WITHOUT REVIEW. APPROVAL OF SHOP DRAWINGS, SAMPLES, OR CATALOG DATA BY THE ENGINEER OF RECORD OR THE CITY OF LAKE WORTH SHALL NOT AUTHORIZE ANY DEVIATION FROM THE REQUIREMENTS OF THE CONTRACT DOCUMENTS.
   C. ANY PROPOSED SUBSTITUTE OR EQUAL TO THE THAT SHOWN ON THE CONTRACT DOCUMENTS SHALL BE ACCOMPANIED BY CALCULATIONS SUBSTANTIATING EQUIVALENCY. SHOP DRAWINGS WITH SUBSTITUTE MATERIALS NOT ACCOMPANIED BY CALCULATIONS WILL BE RETURNED WITHOUT REVIEW.
   D. THE CONTRACTOR SHALL CONFIRM COMPATIBILITY OF PIPE SLOPES AND INVERTS DURING THE SHOP DRAWING AND MATERIALS ORDERING PHASE OF THE PROJECT AND ADVISE THE ENGINEER OF RECORD IN WRITING OF ANY DISCREPANCIES.
   E. INDIVIDUAL SHOP DRAWINGS FOR ALL PRECAST STRUCTURES ARE REQUIRED. CATALOG LITERATURE WILL NOT BE ACCEPTED FOR PRECAST STRUCTURES.
7. FIELD REVIEWS. THE CONTRACTOR SHALL PROVIDE NOTIFICATION, 48 HOURS (MIN.), PRIOR TO ANY REQUIRED FIELD REVIEWS OR INSPECTIONS AND SHALL SUPPLY ALL NECESSARY EQUIPMENT, LABOR, AND MATERIALS FOR INSPECTION AND/OR TEST. ALL WORK SHALL BE OPEN AND SUBJECT TO REVIEW AND/OR INSPECTION BY AUTHORIZED PERSONNEL OF THE CITY OF LAKE WORTH AND THE ENGINEER OF RECORD.
13. DENSITY TESTING. THE CONTRACTOR SHALL BE RESPONSIBLE FOR OBTAINING ALL NECESSARY TESTING TO ENSURE THAT THE PROPER COMPACTION HAS BEEN ACHIEVED FOR ALL SUBGRADE, BASE MATERIAL, PIPE BASE MATERIAL, BACKFILL, & ALL OTHER AREAS WHERE COMPACTION REQUIREMENTS ARE SPECIFIED. ALL TEST RESULTS SHALL BE SIGNED & SEALED BY A FLORIDA LICENSED PROFESSIONAL ENGINEER AND COPIES SHALL BE PROVIDED TO THE ENGINEER OF RECORD AND THE CITY OF LAKE WORTH.
14. PERMITS. THE CONTRACTOR SHALL NOT COMMENCE CONSTRUCTION PRIOR TO RECEIPT OF ALL APPLICABLE PERMITS AND APPROVALS INCLUDING AN APPROVED MAINTENANCE OF TRAFFIC PLAN. THE CONTRACTOR SHALL ABIDE BY ALL APPLICABLE REQUIREMENTS OF THE PERMITS AND AGENCY APPROVALS.
15. EROSION CONTROL. ALL EROSION CONTROL MEASURES SHALL BE INSTALLED IN ACCORDANCE WITH FDOT INDICES 102, 103 AND 106, THE FDEP NATIONAL POLLUTANT DISCHARGE ELIMINATION SYSTEM (NPDES) GENERAL PERMIT (IF APPLICABLE), AND THE STORMWATER POLLUTION PREVENTION PLAN (SWPPP). FILTER FABRIC, HAY BALES, OR ROCK BAGS SHALL BE INSTALLED IN EACH INLET THROUGHOUT THE CONSTRUCTION PERIOD. A SOIL TRACKING PREVENTION DEVICE (STPD) SHALL CONSTRUCTED AT ALL UNSTABILIZED CONSTRUCTION ACCESS POINTS, PER FOOT INDEX NO. 106.
16. STORM DRAINAGE. ALL STORM DRAINAGE PIPE JOINTS SHALL BE WRAPPED IN FILTER FABRIC PER FOOT STANDARD INDEX NO. 280. ALL DRAINAGE STRUCTURES SHALL CONFORM TO THE REQUIREMENTS OF FDOT STANDARD SPECIFICATIONS FOR ROAD AND BRIDGE CONSTRUCTION, LATEST EDITION. ALL GRATES SHALL BE SECURED TO THE STRUCTURES WITH AN EYEBOLT AND CHAIN. ALL STORM DRAINAGE SHALL BE FREE OF SILT AND SEDIMENT AT THE TIME OF FINAL ACCEPTANCE BY THE CITY OF LAKE WORTH.
17. DEWATERING. THE CONTRACTOR SHALL BE RESPONSIBLE FOR OBTAINING AND COMPLYING WITH ANY DEWATERING PERMITS AND/OR APPROVALS NECESSARY FOR CONSTRUCTION. NO WATER FROM DEWATERING MEASURES SHALL BE DISCHARGED OFF-SITE. ALL DISCHARGE SHALL BE CONTAINED IN ON-SITE SEDIMENT BASINS.
18. SIDEWALKS. ALL SIDEWALKS SHALL BE CONSTRUCTED TO MEET THE REQUIREMENTS OF THE FLORIDA BUILDING CODE, CHAPTER 11 - FLORIDA ACCESSIBILITY CODE FOR BUILDING CONSTRUCTION. ALL CURB RAMPS SHALL BE CONSTRUCTED IN ACCORDANCE WITH FDOT STANDARD INDEX NO. 304 AND THE REQUIREMENTS OF THE FLORIDA BUILDING CODE. ALL WALKWAYS CROSSING VEHICULAR AREAS SHALL HAVE A DETECTABLE WARNING SURFACE (TRUNCATED DOMES) IN ACCORDANCE WITH FDOT STANDARD INDEX NO. 304 AND THE FLORIDA BUILDING CODE, CHAPTER 11 - ACCESSIBILITY CODE FOR BUILDING CONSTRUCTION. ALL SIDEWALKS SHALL BE BROOM FINISHED WITH AN EVEN, DUSTLESS SURFACE AND SHALL BE FREE OF CRACKS AT TIME OF FINAL ACCEPTANCE BY THE CITY OF LAKE WORTH.
19. PAVEMENT. WHERE FULL-DEPTH PAVEMENT REPLACEMENT IS SPECIFIED, EXISTING BASEROCK MAY NOT BE REUSED, HOWEVER IT MAY BE UTILIZED AS SUBGRADE STABILIZATION MATERIAL. ALL SUBGRADE SHALL BE FREE OF MUCK, ROOTS, UNDERBRUSH, VEGETATIVE MATTER, GARBAGE, TRASH, OR ANY OTHER UNSUITABLE MATERIALS. BASEROCK AND ASPHALT SHALL BE PLACED IN MULTIPLE LIFTS AND SHALL BE PLACED IN ACCORDANCE WITH THE APPLICABLE FDOT STANDARD SPECIFICATIONS FOR ROAD AND BRIDGE CONSTRUCTION, LATEST EDITION. FINAL LIFT OF ASPHALT SHALL PROVIDE A UNIFORM FINISH AND SHALL BE PLACED TO CORRECT MINOR IMPERFECTIONS IN THE FIRST LIFT AND TO PROVIDE POSITIVE DRAINAGE FOR THE ROADWAY.
20. SIGNING AND PAVEMENT MARKING. ALL PAVEMENT MARKINGS WITHIN CITY OF LAKE WORTH RIGHT-OF-WAY SHALL BE THERMOPLASTIC. THERMOPLASTIC SHALL NOT BE INSTALLED ON PAVEMENT UNTIL A MINIMUM OF FIVE CALENDAR DAYS AFTER THE FINAL LIFT OF ASPHALT HAS BEEN COMPLETED. BLUE/BLUE REFLECTIVE PAVEMENT MARKERS (RPM) SHALL BE INSTALLED TO INDICATE THE LOCATION OF ALL FIRE HYDRANTS.

CITY OF LAKE WORTH PUBLIC SERVICES DEPARTMENT | GENERAL NOTES | 01

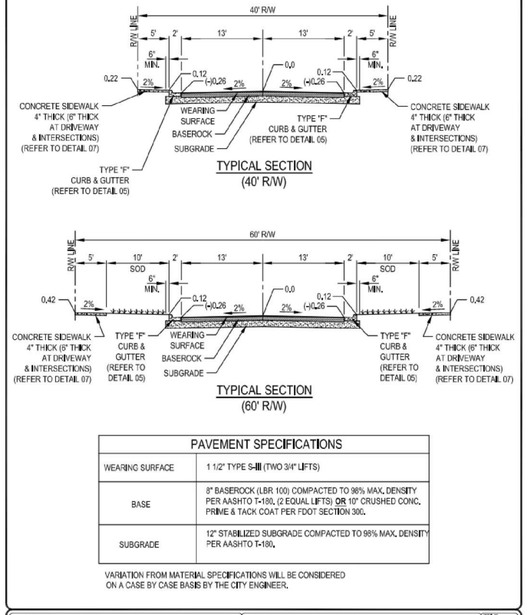

PAVEMENT SPECIFICATIONS	
WEARING SURFACE	1 1/2" TYPE S-III (TWO 3/4" LIFTS)
BASE	8" BASEROCK (LBR 100) COMPACTED TO 98% MAX. DENSITY PER AASHTO T-180, (2 EQUAL LIFTS) OR 10" CRUSHED CONC. PRIME & TACK COAT PER FDOT SECTION 300.
SUBGRADE	12" STABILIZED SUBGRADE COMPACTED TO 98% MAX. DENSITY PER AASHTO T-180.

VARIATION FROM MATERIAL SPECIFICATIONS WILL BE CONSIDERED ON A CASE BY CASE BASIS BY THE CITY ENGINEER.

CITY OF LAKE WORTH PUBLIC SERVICES DEPARTMENT | TYPICAL RIGHT-OF-WAY SECTIONS | 02

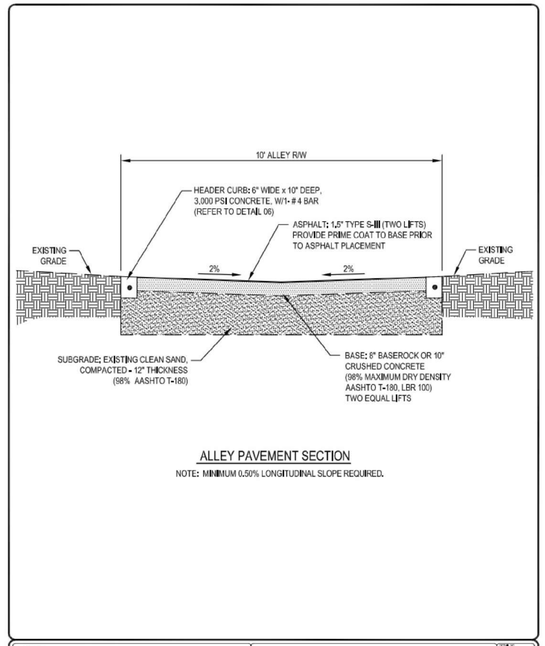

CITY OF LAKE WORTH PUBLIC SERVICES DEPARTMENT | ALLEY PAVEMENT SECTION | 03

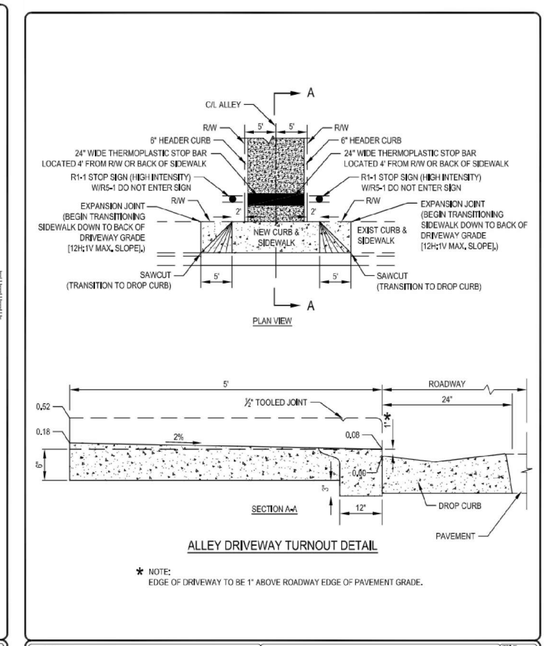

CITY OF LAKE WORTH PUBLIC SERVICES DEPARTMENT | ALLEY AND DRIVEWAY TURNOUTS | 04

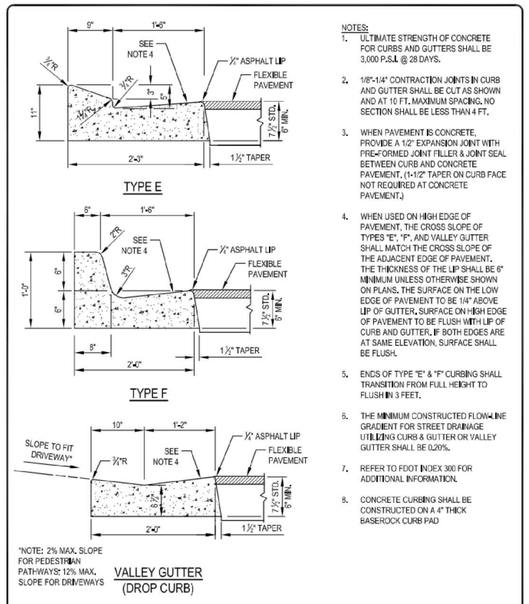

NOTES:
1. ULTIMATE STRENGTH OF CONCRETE FOR CURBS AND GUTTERS SHALL BE 3,000 P.S.I. @ 28 DAYS.
2. 1/8"-1/4" CONTRACTION JOINTS IN CURB AND GUTTER SHALL BE CUT AS SHOWN AND AT 10 FT. MAXIMUM SPACING. NO SECTION SHALL BE LESS THAN 4 FT.
3. WHEN PAVEMENT IS CONCRETE, PROVIDE A 1/2" EXPANSION JOINT WITH PRE-FORMED JOINT FILLER & JOINT SEAL BETWEEN CURB AND CONCRETE PAVEMENT. (1-1/2" TAPER ON CURB FACE NOT REQUIRED AT CONCRETE PAVEMENT.)
4. WHEN USED ON HIGH EDGE OF PAVEMENT, THE CROSS SLOPE OF TYPES "E", "F", AND VALLEY GUTTER SHALL MATCH THE CROSS SLOPE OF THE ADJACENT EDGE OF PAVEMENT. THE THICKNESS OF THE LIP SHALL BE 6" MINIMUM UNLESS OTHERWISE SHOWN ON PLANS. THE SURFACE ON THE LOW EDGE OF PAVEMENT TO BE 1/4" ABOVE LIP OF GUTTER. SURFACE ON HIGH EDGE OF PAVEMENT TO BE FLUSH WITH LIP OF CURB AND GUTTER. IF BOTH EDGES ARE AT SAME ELEVATION, SURFACE SHALL BE FLUSH.
5. ENDS OF TYPE "E" & "F" CURBING SHALL TRANSITION FROM FULL HEIGHT TO FLUSH IN 3 FEET.
6. THE MINIMUM CONSTRUCTED FLOW-LINE GRADIENT FOR STREET DRAINAGE UTILIZING CURB & GUTTER OR VALLEY GUTTER SHALL BE 0.20%.
7. REFER TO FDOT INDEX 300 FOR ADDITIONAL INFORMATION.
8. CONCRETE CURBING SHALL BE CONSTRUCTED ON A 4" THICK BASEROCK CURB PAD

CITY OF LAKE WORTH PUBLIC SERVICES DEPARTMENT | CONCRETE CURB AND GUTTER | 05

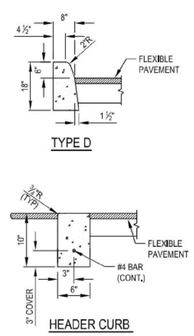

NOTES:
1. ULTIMATE STRENGTH OF CONCRETE FOR CURBS SHALL BE 3,000 P.S.I. @ 28 DAYS.
2. 1/8" -1/4" CONTRACTION JOINTS IN CURBS SHALL BE 3 1/2" MIN. DEPTH (AS MEASURED FROM TOP OF ADJACENT PAVEMENT) AND AT 10-FOOT CENTERS. NO SECTION SHALL BE LESS THAN 4 FEET.
3. WHEN PAVEMENT IS CONCRETE, PROVIDE A 1/2" EXPANSION JOINT WITH PRE-FORMED JOINT FILLER & JOINT SEAL BETWEEN CURB AND CONCRETE PAVEMENT. (1-1/2" TAPER ON CURB FACE NOT REQUIRED AT CONCRETE PAVEMENT.)
4. ENDS OF ALL CURBING SHALL TRANSITION FROM FULL HEIGHT TO FLUSH IN 3 FEET.
5. THE MINIMUM CONSTRUCTED FLOW-LINE GRADIENT FOR STREET DRAINAGE UTILIZING CURB & GUTTER OR VALLEY GUTTER SHALL BE 0.20%.
6. REFER TO FDOT INDEX 300 FOR ADDITIONAL INFORMATION.

CITY OF LAKE WORTH PUBLIC SERVICES DEPARTMENT | CONCRETE CURB | 06

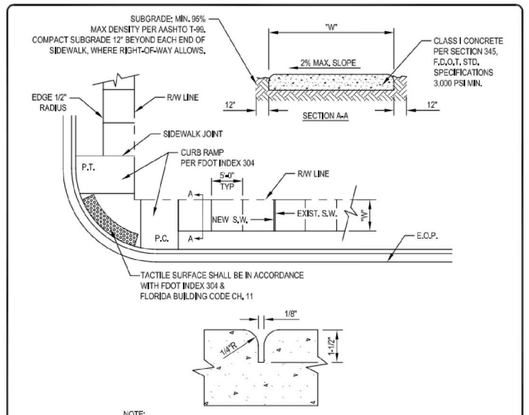

NOTE:
1. ALL SIDEWALKS SHALL BE CONSTRUCTED THROUGH DRIVEWAYS.
2. ALL SIDEWALKS SHALL INCLUDE ADA COMPLIANT RAMPS @ INTERSECTIONS.
3. CONCRETE SHALL BE BROOM FINISHED WITH EVEN DUSTLESS SURFACE.

TABLE OF SIDEWALK THICKNESS - "T"	
RESIDENTIAL AREAS	4"
WITHIN 10' OF CROSS-STREETS, AT DRIVEWAYS & OTHER AREAS	6"
TABLE OF SIDEWALK WIDTHS - "W"	
STANDARD WIDTH	5'
OTHER AREAS AS SPECIFIED BY THE CITY ENGINEER.	

CONCRETE WALK CONSTRUCTION

CITY OF LAKE WORTH PUBLIC SERVICES DEPARTMENT | CONCRETE WALK | 07

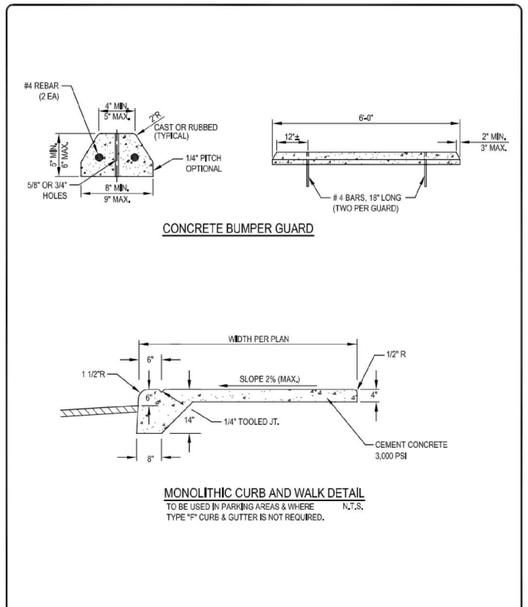

CITY OF LAKE WORTH PUBLIC SERVICES DEPARTMENT | CONCRETE BUMPER GUARD AND MONOLITHIC CURB AND WALK | 08

CDI CIVIL DESIGN, INC.
Service Driven Design – Engineered Results
1400 Centrepark Blvd, Suite 905
West Palm Beach, FL 33401
T: 561.659.5760 F: 561.659.5772
www.civil-design.com
Registry No. 9664

DATUM = NAVD '88
NGVD '29 CONVERSION FACTOR = (+)1.54'

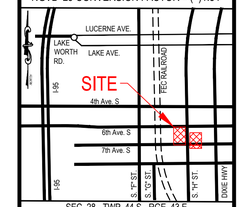

PINNACLE ON SIXTH

LAKE WORTH BEACH, FL

APPROVED BY:

T. Jeff Trompeter, State of Florida, Professional Engineer, License No. 51045. This item has been digitally signed and sealed by T. Jeff Trompeter on the date indicated here. Printed copies of this document are not considered signed and sealed and the signature must be verified on any electronic copies.

CDI PROJECT NO. 26974-01

DATE: 03/30/2026
DESIGNED: CDI
DRAWN: CDI

NO.	DATE	REVISION DESCRIPTION

PAVING, GRADING & DRAINAGE DETAILS

C4.1

PAVEMENT MARKING SPECIFICATIONS

All Pavement markings to be installed per these typicals, plans and specifications, and as directed by the City Engineer and shall conform to the requirements of F.D.O.T. and the manual on uniform traffic control devices, (MUTCD).

PERMANENT MARKINGS

Installation:
- All markings shall be installed by the extruded method.
- Markings shall be free of weaves, bows, drips, drags, and other degrading items.
- Chalk shall be used for all layout markings

Materials:
- All materials shall be alkyd or hydrocarbon thermoplastic meeting all FDOT specifications.

Thickness:
- All markings shall be installed to yield 90 mils of material measured above the pavement surface.

Spheres:
- Reflective glass sheres are to be applied to all stripes and markings per FDOT specifications.

Alternate Material:
- STAYMARK marking tape, or equivalent may be used, as approved or directed by the City Engineer.

Layout:
- Layout shall be made using marking chalk.
- It is recommended that marking layout be inspected by the City Engineer prior to the placement of final markings.

TEMPORARY MARKINGS

Temporary markings may be used only as specified in this section, or as approved or directed by the City Engineer.

Final Pavement Surface:
- Only foil backed marking tape is allowed.
- All tape shall be totally removed concurrent with permanent marking placement.

Other Pavement Surfaces:
- Intermediate pavement surfaces may be marked with FDOT approved materials, designs, and specifications.

CITY OF LAKE WORTH PUBLIC SERVICES DEPARTMENT	PAVEMENT MARKING SPECIFICATIONS	13

ALL PAVEMENT MARKINGS

All paved surfaces shall be properly marked prior to the hours of darkness.

RAISED PAVEMENT MARKERS

- R.P.M.s shall be installed on all lane lines and centerlines, spaced at 20' or 40'.
- R.P.M.s shall be a 4 x 4 type class "B" marker meeting F.D.O.T. specifications and shall be approved by the City Engineer prior to use.
- R.P.M.'s shall be installed using alkyd thermoplastic on asphalt and epoxy on concrete.

OTHER NOTES

- All Materials within right-of-way shall be thermoplastic and per F.D.O.T. specifications.
- Pavement marking within private parking lots may be painted according to F.D.O.T. specifications, except for all stop bars adjacent to public rifgt-of-way.

CITY OF LAKE WORTH PUBLIC SERVICES DEPARTMENT	PAVEMENT MARKING SPECIFICATIONS	14

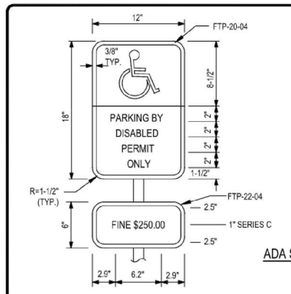

NOTES:

SIGN FTP-20-04
1. ALL LETTERS ARE 1" SERIES "C".
2. TOP PORTION OF SIGN SHALL HAVE A REFLECTORIZED BLUE BACKGROUND WITH WHITE REFLECTORIZED LEGEND & BORDER.
3. BOTTOM PORTION OF SIGN SHALL HAVE A REFLECTORIZED WHITE BACKGROUND WITH BLACK OPAQUE LEGEND & BORDER.

SIGN FTP-22-04
1. ALL LETTERS ARE 1" SERIES "C".
2. BACKGROUND WHITE, LEGEND AND BORDER BLACK.

ADA SIGN DETAILS

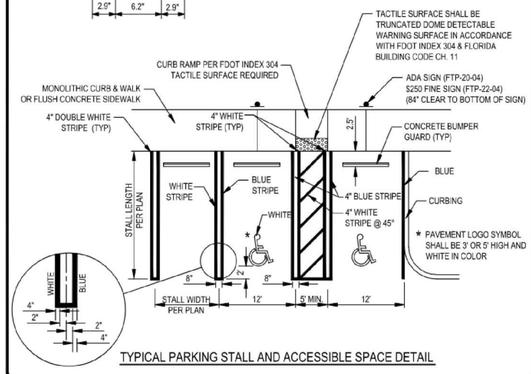

TYPICAL PARKING STALL AND ACCESSIBLE SPACE DETAIL

CITY OF LAKE WORTH PUBLIC SERVICES DEPARTMENT	ACCESSIBLE PARKING SIGNAGE AND PAVEMENT MARKINGS	15

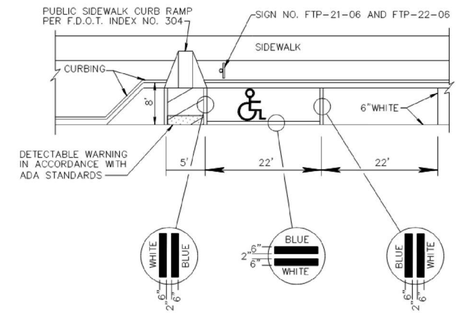

NOTE:

HANDICAPPED PARKING SPACE MUST BE FIRST OR LAST PARALLEL PARKING SPACE IN THE ROW. ADJACENT TO LANDSCAPE ISLAND. IF SPACE, IS AT THE FRONT OF PARKING ROW ACCESS PANEL MUST BE IN FRONT OF CAR AND IF SPACE IS AT THE END OF PARKING ROW ACCESS PANEL MUST BE AT THE REAR OF CAR.

CITY OF LAKE WORTH PUBLIC SERVICES DEPARTMENT	TYPICAL PARKING SPACES	16

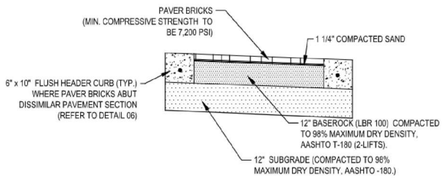

NOTE: INSTALLATION OF PAVER BRICKS SHALL BE IN CONFORMANCE WITH MANUFACTURER'S INSTALLATION CRITERIA. PAVER BRICK THICKNESS SHALL BE MINIMUM 2-3/8 INCHES. PAVER BRICK SHALL BE COLORED THROUGH THE FULL DEPTH OF THE PAVER AND NOT JUST THE SURFACE. THE SAND BEDDING COURSE SHALL BE WELL GRADED, CLEAN, WASHED LIMESTONE SCREENINGS WITH 100% PASSING A 3/8" SIEVE SIZE AND A MAXIMUM 3% PASSING A No. 200 SIEVE SIZE. DO NOT USE MASON SAND. ALL EDGES OF THE PAVER BRICK SHALL BE RESTRAINED BY CONCRETE HEADER CURB OR VALLEY GUTTER. CITY TO APPROVE SIDEWALK PAVER MANUFACTURER, TYPE, COLOR, AND SIZE. SUBMIT THREE (3) SAMPLE PAVERS FOR APPROVAL.

PAVER BRICK DETAIL
N.T.S.

CITY OF LAKE WORTH PUBLIC SERVICES DEPARTMENT	PAVER BRICK	17

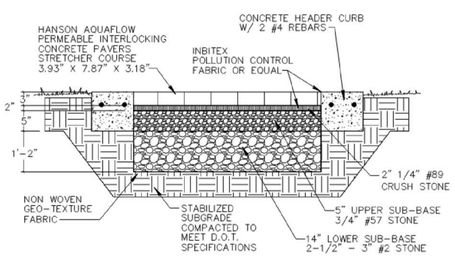

NOTE:

CONTRACTOR TO FIELD VERIFY EXACT LOCATION, SIZE AND DEPTH OF ALL EXISTING UTILITIES AT THE OF CONSTRUCTION AND REPORT ANY DISCREPANCIES TO THE CITY ENGINEER.

CITY OF LAKE WORTH PUBLIC SERVICES DEPARTMENT	PERVIOUS PAVER SECTION DETAIL	18

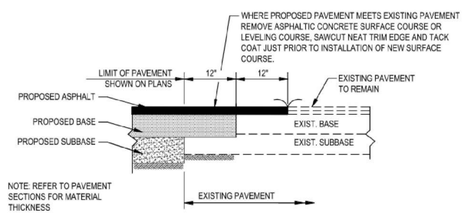

PAVEMENT RESTORATION DETAIL

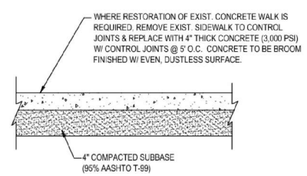

CONCRETE SIDEWALK RESTORATION DETAIL
N.T.S.

CITY OF LAKE WORTH PUBLIC SERVICES DEPARTMENT	PAVEMENT AND SIDEWALK RESTORATION	19

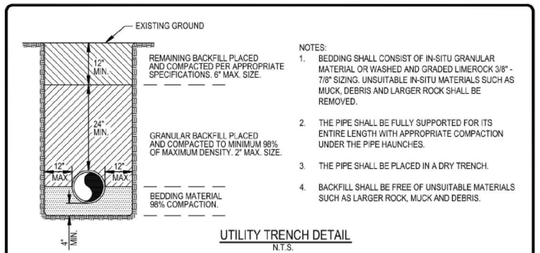

NOTES:
1. BEDDING SHALL CONSIST OF IN-SITU GRANULAR MATERIAL OR WASHED AND GRADED LIMEROCK 3/8" - 7/8" SIZING. UNSUITABLE IN-SITU MATERIALS SUCH AS MUCK, DEBRIS AND LARGER ROCK SHALL BE REMOVED.
2. THE PIPE SHALL BE FULLY SUPPORTED FOR ITS ENTIRE LENGTH WITH APPROPRIATE COMPACTION UNDER THE PIPE HAUNCHES.
3. THE PIPE SHALL BE PLACED IN A DRY TRENCH.
4. BACKFILL SHALL BE FREE OF UNSUITABLE MATERIALS SUCH AS LARGER ROCK, MUCK AND DEBRIS.

UTILITY TRENCH DETAIL
N.T.S.

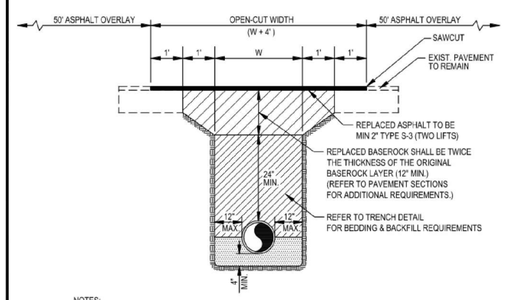

NOTES:
1. PAVEMENT OVERLAY MAY BE REQUIRED IN OPEN-CUT AREAS AT THE DISCRETION OF THE CITY ENGINEER.
2. THE CONTRACTOR SHALL COMPLY WITH APPLICABLE TRENCH SAFETY REGULATIONS.
3. FINISHED SURFACE SHALL HAVE SMOOTH FINISH & SHALL MATCH FLUSH TO SURROUNDING PAVEMENT.
4. ASPHALT OVERLAY SHALL EXTEND A MINIMUM OF 50' BEYOND THE LIMITS OF THE OPEN CUT.

PAVEMENT OPEN-CUT DETAIL
N.T.S.

CITY OF LAKE WORTH PUBLIC SERVICES DEPARTMENT	UTILITY TRENCH AND PAVEMENT OPEN-CUT	21

CDI
CIVIL DESIGN, INC.
Service Driven Design – Engineered Results
1400 Centrepark Blvd, Suite 905
West Palm Beach, FL 33401
T: 561.659.5760 F: 561.659.5772
www.civil-design.com
Registry No. 9664

DATUM = NAVD '88
NGVD '29 CONVERSION FACTOR = (+)1.54'

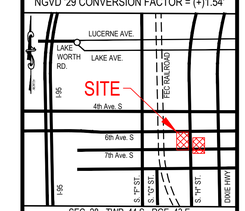

SEC. 28 - TWP. 44 S - RGE. 43 E
LOCATION MAP
N.T.S.

PINNACLE ON SIXTH

LAKE WORTH BEACH, FL

APPROVED BY:

T. Jeff Trompeter, State of Florida, Professional Engineer, License No. 51045. This item has been digitally signed and sealed by T. Jeff Trompeter on the date indicated here. Printed copies of this document are not considered signed and sealed and the signature must be verified on any electronic copies.

CDI PROJECT NO.
26974-01

DATE:	03/30/2026
DESIGNED:	CDI
DRAWN:	CDI

NO.	DATE	REVISION DESCRIPTION

PAVING, GRADING & DRAINAGE DETAILS

C4.2

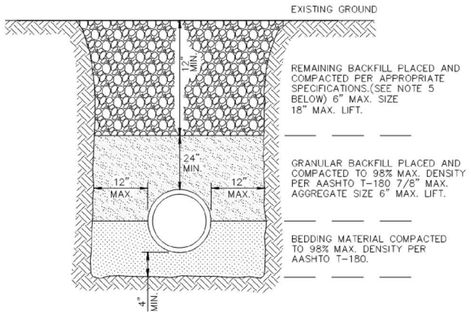

NOTES:

1. UNSUITABLE IN-SITU MATERIALS SUCH AS MUCK, DEBRIS AND LARGE ROCKS SHALL BE REMOVED; BEDDING MATERIAL AND BACKFILL CONSISTING OF WASHED AND GRADED LIMEROCK 3/8" -7/8" SIZING.
2. THE PIPE AND/OR STRUCTURE SHALL BE FULLY SUPPORTED FOR ITS ENTIRE LENGTH WITH APPROPRIATE COMPACTION UNDER THE PIPE HAUNCHES.
3. THE PIPE AND/OR STRUCTURE SHALL BE PLACED IN A DRY TRENCH.
4. BACKFILL SHALL BE FREE OF UNSUITABLE MATERIAL SUCH AS LARGE ROCK, MUCK, AND DEBRIS.
5. COMPACT BACKFILL TO 98% DENSITY UNDER PAVEMENT AND TO 95% DENSITY ELSEWHERE.(AASHTO T-180)
6. COMPACTION AND DENSITY TESTS SHALL BE COMPLETED DURING BACKFILL OPERATIONS, CONTRACTORS NOT FOLLOWING THIS PROCEDURE, FOR WHATEVER REASONS, SHALL BE REQUIRED TO RE-EXCAVATE THE AREA IN QUESTION, DOWN TO THE BEDDING MATERIAL, THEN BACKFILL FOLLOWING THE ABOVE PROCEDURES.

CITY OF LAKE WORTH PUBLIC SERVICES DEPARTMENT	TYPICAL BACKFILL DETAIL	DETAIL NO. 22

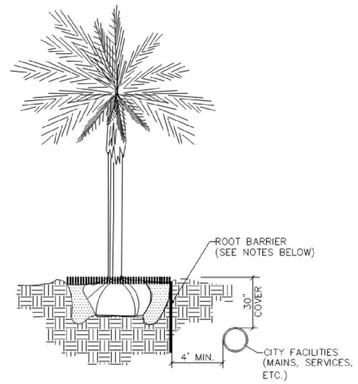

NOTES:

1. ALL ROOT BARRIERS SHALL BE 4' MINIMUM FROM ALL CITY FACILITIES.
2. THE INSTALLATION OF ROOT BARRIERS SHALL BE COORDINATED WITH CITY AND INSPECTED BY CITY PRIOR TO BACKFILLING. ALL ROOT BARRIERS SHALL EXTEND UP TO FINISHED GRADE.
3. ROOT BARRIERS SHALL BE MINIMUM 36" DEEP. APPROVED PRODUCTS INCLUDE "DEEP ROOT" AND "ROOT SOLUTIONS". FLEXIBLE BARRIERS SHALL BE 36" PANELS MANUFACTURED BY BIOBARRIER.
4. ALL ROOT BARRIERS SHALL BE INSTALLED IN ACCORDANCE WITH MANUFACTURERS WRITTEN INSTRUCTIONS.

CITY OF LAKE WORTH PUBLIC SERVICES DEPARTMENT	TYPICAL TREE WITH ROOT BARRIER	DETAIL NO. 23

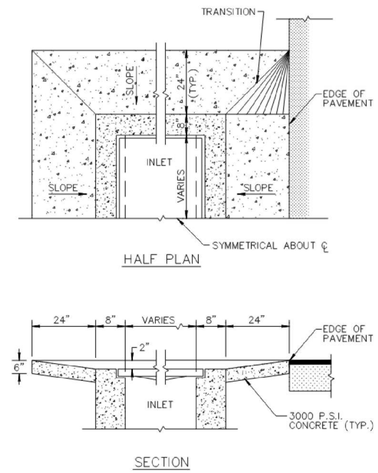

CITY OF LAKE WORTH PUBLIC SERVICES DEPARTMENT	INLET APRON DETIAL	DETAIL NO. 24

1. THE INTENT OF EROSION CONTROL MEASURES INDICATED GRAPHICALLY ON PLANS IS TO PROVIDE A BARRIER TO CONTAIN SILT AND SEDIMENT ON THE PROJECT SITE. THIS REPRESENTATION IS PROVIDED FOR THE CONVENIENCE OF THE CONTRACTOR. THE TEST OF EROSION CONTROL EFFECTIVENESS IS NOT TO BE DETERMINED BY ADHERENCE TO THE REPRESENT SET FORTH ON THE DRAWINGS AND SPECIFICATIONS, BUT BY MEETING THE REGULATIONS SET FORTH BY THE AUTHORITY HAVING JURSDICTION OVER WATER QUALITY CONTROL AND OTHER SEDIMENTATION RESTRICTION REQUIREMENTS IN THE REGION.
2. APPROVED EROSION AND SEDIMENT CONTROL MEASURES SHALL BE INSTALLED PRIOR TO ANY CLEARING GRADING, EXCAVATION, FILLING, OR OTHER LAND DISTURBANCE ACTIVITIES, EXCEPT THOSE OPERATIONS NEEDED TO INSTALL SUCH MEASURES.
3. INSPECTION OF ALL EROSION CONTROL MEASURES SHALL BE CONDUCTED WEEKLY, OR AFTER EACH RAINFALL EVENT. REPAIR, AND/OR REPLACEMENT OF SUCH MEASURES SHALL BE MADE PROMPTY, AS NEEDED.
4. KEEP DUST WITHIN TOLERABLE LIMITS BY SPRINKLING OR OTHER ACCEPTABLE MEANS.
5. ADDITIONAL EROSION AND SEDIMENT CONTROL MEASURES MAY BE REQUIRED IF DEEMED NECESSARY BY ONSITE INSPECTION.
6. FAILURE TO PROPERLY INSTALL AND MAINTAIN EROSION CONTROL PRACTICES SHALL RESULT IN CONSTRUCTION BEING HALTED.
7. DRAINAGE INLETS SHALL BE PROTECTED BY FILTER AND GRADED ROCK AS PER INLET PROTECTION DETAIL.
8. ANY ACCESS ROUTES TO SITE SHALL BE BASED WITH CRUSHED STONE, WHERE PRACTICAL.
9. EROSION CONTROL MEASURES ARE TO BE MAINTAINED UNTIL PERMANENT GROUND COVER IS ESTABLISHED.
10. WHENEVER FEASIBLE, NATURAL VEGETATION SHALL BE RETAINED AND PROTECTED.
11. ALL WORK IS TO BE IN COMPLIANCE WITH THE RULES AND REGULATIONS SET FORTH BY THE STATE OF FLORIDA, DEPARTMENT OF ENVIRONMENTAL PROTECTION AND THE CITY OF DELRAY BEACH.
12. DISCHARGE FROM DEWATERING OPERATIONS SHALL BE RETAINED ONSITE IN A CONTAINMENT AREA.

CITY OF LAKE WORTH PUBLIC SERVICES DEPARTMENT	EROSION CONTROL NOTES DETAIL	DETAIL NO. 25

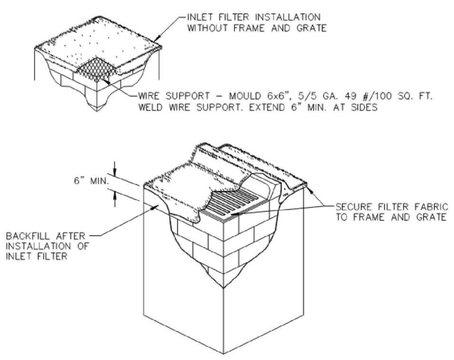

NOT TO SCALE

NOTES:

1. CONTRACTOR IS TO CLEAN INLET FILTER AFTER EVERY STORM.
2. CONTRACTOR TO REMOVE FABRIC JUST PRIOR TO PAVING.

A SEDIMENT TRAP WILL BE EXCAVATED BEHIND THE CURB AT THE INLET. THE BASIN SHALL BE AT LEAST 12 TO 14 INCHES IN DEPTH, APPROXIMATELY 36 INCHES IN WIDTH, AND APPROXIMATELY 7 TO 10 FEET IN LENGTH PARALLEL TO THE CURB.

STORM WATER WILL REACH THE SEDIMENT TRAP VIA CURB CUTS ADJACENT TO EACH SIDE OF THE INLET STRUCTURE. THESE OPENINGS SHALL BE AT LEAST 12 INCHES IN LENGTH. STORM WATER MAY ALSO REACH THE BASIN VIA OVERLAND FLOW LAND AREA BEHIND THE CURB. THE CURB CUTS SHALL BE REPAIRED WHEN THE SEDIMENT TRAP IS REMOVED.

CITY OF LAKE WORTH PUBLIC SERVICES DEPARTMENT	INLET FILTER DETAIL	DETAIL NO. 26

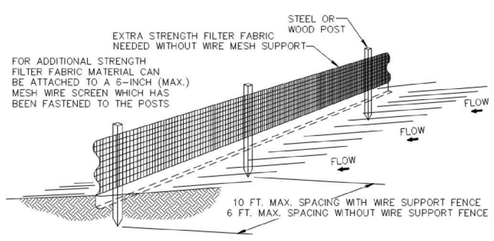

NOTES:

1. THE HEIGHT OF A SILT FENCE SHALL NOT EXCEED 36 INCHES (90 CM).
2. THE FILTER FABRIC SHALL BE PURCHASED IN A CONTINUOUS ROLL CUT TO THE LENGTH OF THE BARRIER TO AVOID THE USE OF JOINTS.
3. POSTS SHALL BE SPACED A MAXIMUM OF 10 FEET (3 M) APART AT THE BARRIER LOCATION AND DRIVEN SECURELY INTO THE GROUND A MINIMUM OF 12 INCHES (30 CM). WHEN EXTRA STRENGTH FABRIC IS USED WITHOUT THE WIRE SUPPORT FENCE, POST SPACING SHALL NOT EXCEED 6 FEET (1.8 M).
4. A TRENCH SHALL BE EXCAVATED APPROXIMATELY 4 INCHES (10 CM) WIDE AND 4 INCHES (10 CM) DEEP ALONG THE LINE OF POSTS AND UPSLOPE FROM THE BARRIER.
5. WHEN STANDARD STRENGTH FILTER FABRIC IS USED, A WIRE MESH SUPPORT FENCE SHALL BE FASTENED SECURELY TO THE UPSLOPE SIDE OF THE POSTS USING HEAVY DUTY WIRE STAPLES AT LEAST 1 INCH (25 MM) LONG, TIE WIRES, OR HOG RINGS. THE WIRE SHALL EXTEND INTO THE TRENCH A MINIMUM OF 2 INCHES (5 CM) AND SHALL NOT EXTEND MORE THAN 36 INCHES (90 CM) ABOVE THE ORIGINAL GROUND SURFACE.
6. THE STANDARD STRENGTH FILTER FABRIC SHALL BE STAPLED OR WIRED TO THE FENCE, AND 8 INCHES (20 CM) OF THE FABRIC SHALL BE EXTENDED INTO THE TRENCH. THE FABRIC SHALL NOT EXTEND MORE THAN 36 INCHES (90 CM) ABOVE THE ORIGIONAL GROUND SURFACE.
7. THE TRENCH SHALL BE BACKFILLED AND THE SOIL COMPACTED OVER THE FILTER FABRIC.
8. ALL PROJECTS REQUIRE SUBMITTAL OF POLLUTION PREVENTION PLAN (PPP).
9. ALL PROJECTS 1 AC. OR MORE MUST SUBMIT NOTICE OF INTENT (NOI) TO FDEP.

CITY OF LAKE WORTH PUBLIC SERVICES DEPARTMENT	SILT FENCE INSTALLATION DETAIL	DETAIL NO. 27

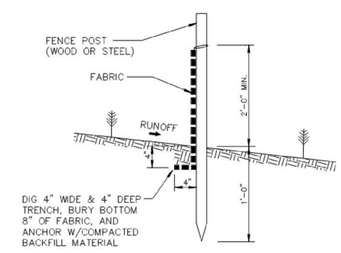

SILT FENCE SECTION
NOT TO SCALE

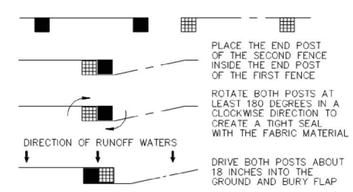

ATTACHING TWO SILT FENCES
NOT TO SCALE

CITY OF LAKE WORTH PUBLIC SERVICES DEPARTMENT	SILT FENCE INSTALLATION DETAIL	DETAIL NO. 28

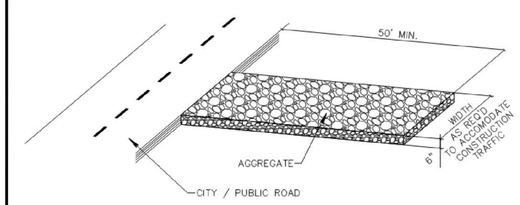

NOTE:
A CONSTRUCTION ENTRANCE SHALL BE CONSTRUCTED AND CONTAIN AN AGGREGATE LAYER (FDOT AGGREGATE NO.1), AT LEAST 6-INCHES THINK. IT MUST EXTEND TO THE WIDTH OF THE VEHICULAR INGRESS AND EGRESS AREA.
CITY/ PUBLIC ROAD TO BE KEPT FREE OF DEBRIS AND AGGREGATE

CITY OF LAKE WORTH PUBLIC SERVICES DEPARTMENT	STABILIZED CONSTRUCTION ENTRANCE DETAIL	DETAIL NO. 29

CDI
CIVIL DESIGN, INC.
Service Driven Design – Engineered Results
1400 Centrepark Blvd, Suite 905
West Palm Beach, FL 33401
T: 561.659.5760 F: 561.659.5772
www.civil-design.com
Registry No. 9664

DATUM = NAVD '88
NGVD '29 CONVERSION FACTOR = (+)1.54'

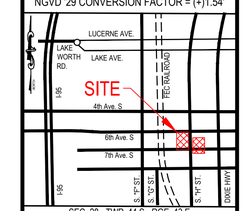

SEC. 28 - TWP. 44 S - RGE. 43 E
LOCATION MAP
N.T.S.

PINNACLE ON SIXTH

LAKE WORTH BEACH, FL

APPROVED BY:

T. Jeff Trompeter, State of Florida, Professional Engineer, License No. 51045. This item has been digitally signed and sealed by T. Jeff Trompeter on the date indicated here. Printed copies of this document are not considered signed and sealed and the signature must be verified on any electronic copies.

CDI PROJECT NO.
26974-01

DATE:	03/30/2026
DESIGNED:	CDI
DRAWN:	CDI

NO.	DATE	REVISION DESCRIPTION

PAVING, GRADING & DRAINAGE DETAILS

C4.3

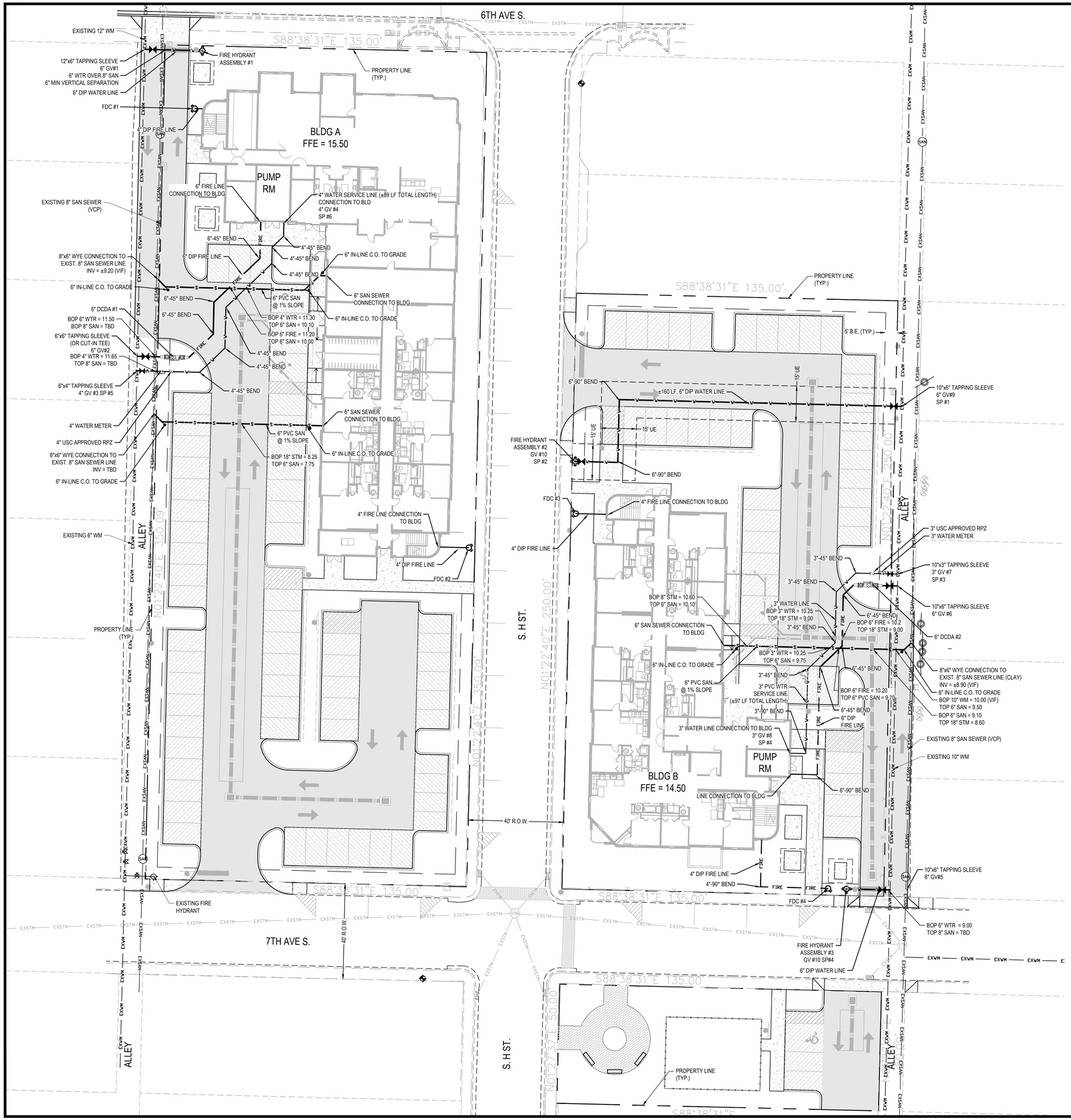

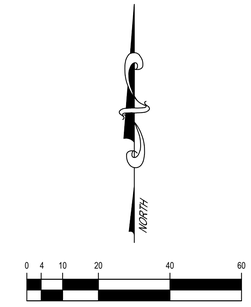

LEGEND

EXISTING WATERMAIN	EXWM
EXISTING SANITARY SEWER	EXSAN
EXISTING STORM DRAINAGE	EXSTM
PROPOSED STORM DRAINAGE LINE W/ STORM STRUCTURE	D
PROPOSED SANITARY SEWER	S
PROPOSED WATERMAIN	W
PROPOSED WATER SERVICE	W
PROPOSED FIRE LINE	FIRE
PROPOSED PAVEMENT / PERVIOUS	
PROPOSED CONCRETE	
PAVER BRICK	

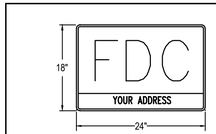

FIRE DEPARTMENT CONNECTION SIGN
N.T.S.

CDI
CIVIL DESIGN, INC.
Service Driven Design – Engineered Results
1400 Centrepark Blvd, Suite 905
West Palm Beach, FL 33401
T: 561.659.5760 F: 561.659.5772
www.civil-design.com
Registry No. 9664

DATUM = NAVD '88
NGVD '29 CONVERSION FACTOR = (+)1.54'

SEC. 28 - TWP. 44 S - RGE. 43 E
LOCATION MAP
N.T.S.

PINNACLE ON SIXTH

LAKE WORTH BEACH, FL

APPROVED BY:

T. Jeff Trompeter, State of Florida, Professional Engineer, License No. 51045. This item has been digitally signed and sealed by T. Jeff Trompeter on the date indicated here. Printed copies of this document are not considered signed and sealed and the signature must be verified on any electronic copies.

CDI PROJECT NO.
26974-01

DATE: 03/30/2026
DESIGNED: CDI
DRAWN: CDI

NO.	DATE	REVISION DESCRIPTION
1	6/10/26	ADDRESS CITY SPRT COMMENTS
2	7/16/26	ADDRESS CITY SPRT COMMENTS

POTABLE WATER & SANITARY SEWER PLAN

C5.1

TAPPING SADDLE 1" – JCM 402–CC
MULLERS PARTS MATERIAL OR A. Y. McDONALD ONLY

	MULLER	A. Y. McDONALD
CORPORATION STOP	H–15008	XXX
CURB STOP	B–25170	XXX
ANGLE CURB STOP	H–14265	XXX
METER COUPLING – 3/4" OR 1"	H–10890	XXX
U–BRANCH CONNECTION – 1'x 3/4"x 6 1/2"	H–15365	XXX

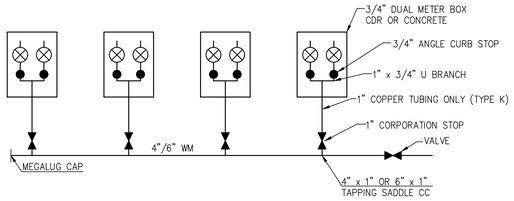

MULTIPLE WATER SERVICES | 1

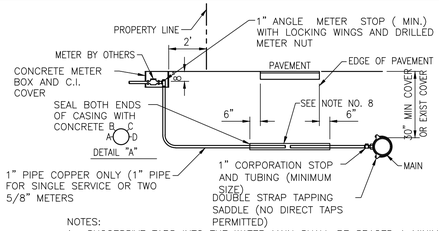

NOTES:
1. SUCCESSIVE TAPS INTO THE WATER MAIN SHALL BE SPACED A MINIMUM OF 18" OFFSET AND AT 45° FROM THE CENTERLINE (ON MAINS WITH GREATER THAN 30" OF COVER. SEE DETAIL 'A').
2. WHERE NO SIDEWALK EXISTS, METER BOXES SHALL BE SET TO CONFORM TO FINISH GRADE.
3. COPPER TUBING SHALL BE TYPE "K" WITH COMPRESSION FITTINGS.
4. ROTATE THE CORPORATION STOP SO THAT THE OPERATING NUT IS ACTUATED FROM THE VERTICAL POSITION RATHER THAN THE HORIZONTAL.
5. COPPER SERVICE LINES SHALL BE CONTINUOUS FROM CORPORATION STOP TO ANGLE METER STOP WITH NO FITTINGS IN BETWEEN.
6. TAPPING SADDLES AND CORPORATION STOPS SHALL HAVE CC THREADS.
7. SERVICE CASING SHALL NOT BE INSTALLED BY WATER JETTING UNDER ROADWAY.
8. GALVANIZED CASING REQUIRED FOR JACK AND BORE IN MOST CASES, SCHEDULE 40 PVC MAY BE USED WITH THE APPROVAL OF THE ENGINEER . CASING SHOULD EXTEND SIX (6) FEET BEYOND EDGE OF PAVEMENT AND SIZED AS FOLLOWS
   A. 1" SERVICE USE 2" CASING
   B. 2" SERVICE USE 4" CASING
9. METER BOX TO BE SET TWO FEET BEHIND PROPERTY LINE AND TWO FEET INSIDE SIDE PROPERTY LINE ON EITHER SIDE OF PROPERTY.
10. PIPING LAYOUT SHOWN IS TYPICAL FOR 2" SERVICE.

WATER SERVICE FOR 1" OR 2" PIPE | 2

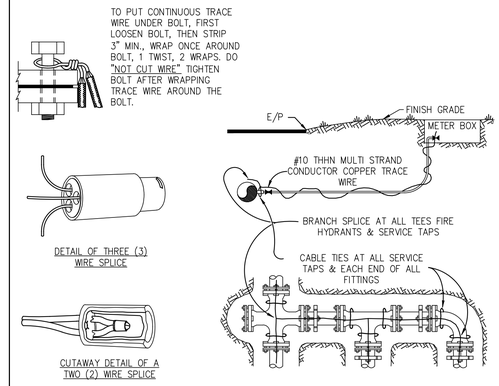

NOTES:
1. TRACE WIRE IS REQUIRED ON ALL NON METALLIC PIPE.
2. INCLUDE ALL COST OF MATERIAL & LABOR IN PRICE OF PIPE.
3. CONTRACTOR IS RESPONSIBLE FOR CONTINUITY OF ALL TRACE WIRE.
4. WIRE SPLICE CONNECTORS SHALL BE DRY–CON DIRECT BURY LUG BY KING INNOVATIONS, DS–500 DRI–SPLICE BY SPEARS OR DIRECT BURY PRODUCTS BY 3M

TRACE WIRE | 3

HORIZONTAL SEPARATION BETWEEN UNDERGROUND WATERMAINS AND SANITARY OR STORM SEWERS, WASTEWATER OR STORMWATER FORCE MAINS, RECLAIMED WATER PIPELINES AND ON SITE SEWAGE TREATMENT AND DISPOSAL SYSTEMS.

1. NEW OR RELOCATED UNDERGROUND WATERMAINS SHALL BE LAID TO PROVIDE A HORIZONTAL DISTANCE OF AT LEAST THREE FEET BETWEEN THE OUTSIDE OF THE WATERMAIN AND THE OUTSIDE OF ANY EXISTING OR PROPOSED SEWER, STORMWATER FORCEMAIN, OR PIPELINE CONVEYING RECLAIMED WATER REGULATED UNDER PART III OF CHAPTER 2–610, F.A.C.
2. NEW OR RELOCATED UNDERGROUND WATERMAINS SHALL BE LAID TO PROVIDE A HORIZONTAL DISTANCE OF AT LEAST THREE FEET, AND PREFERABLY TEN FEET, BETWEEN THE OUTSIDE OF THE WATERMAIN AND THE OUTSIDE OF ANY EXISTING OR PROPOSED VACUUM–TYPE SANITARY SEWER.
3. NEW OR RELOCATED UNDERGROUND WATERMAINS SHALL BE LAID TO PROVIDE A HORIZONTAL DISTANCE OF AT LEAST SIX, AND PREFERABLY TEN FEET, BETWEEN THE OUTSIDE OF THE WATERMAIN AND THE OUTSIDE OF ANY EXISTING OR PROPOSED GRAVITY OR PRESSURE TYPE SANITARY SEWER, WASTEWATER FORCEMAIN, OR PIPELINE CONVEYING RECLAIMED WATER NOT REGULATED UNDER PART III OF CHAPTER 62–610, F.A.C. THE MINIMUM HORIZONTAL SEPARATION BETWEEN WATERMAINS AND GRAVITY TYPE SANITARY SEWERS SHALL BE REDUCED TO THREE FEET WHERE THE BOTTOM OF THE WATERMAIN IS LAID AT LEAST SIX INCHES ABOVE THE TOP OF THE SEWER.
4. NEW OR RELOCATED UNDERGROUND WATERMAINS SHALL BE LAID TO PROVIDE A MINIMUM HORIZONTAL DISTANCE OF AT LEAST TEN FEET BETWEEN THE OUTSIDE OF THE WATERMAIN AND ALL PARTS OF ANY EXISTING OR PROPOSED 'ON SITE SEWAGE TREATMENT AND DISPOSAL SYSTEM' AS DEFINED IN SECTION 381.0065(2), F.S. AND RULE 64E–6.002, F.A.C.

VERTICAL SEPARATION BETWEEN UNDERGROUND WATERMAINS AND SANITARY OR STORM SEWERS, WASTEWATER OR STORMWATER FORCEMAINS, AND RECLAIMED WATER PIPELINES.

1. NEW OR RELOCATED UNDERGROUND WATERMAINS CROSSING ANY EXISTING OR PROPOSED GRAVITY OR VACUUM TYPE SANITARY OR STORM SEWER SHALL BE LAID SO THE OUTSIDE OF THE WATERMAIN IS AT LEAST SIX INCHES, AND PREFERABLY TWELVE INCHES ABOVE, OR AT LEAST TWELVE INCHES BELOW THE OUTSIDE OF THE OTHER PIPELINE. HOWEVER, IT IS PREFERABLE TO LAY THE WATERMAIN ABOVE THE OTHER PIPELINE.
2. NEW OR RELOCATED UNDERGROUND WATERMAINS CROSSING ANY EXISTING OR PROPOSED PRESSURE TYPE SANITARY SEWER, WASTEWATER OR STORMWATER FORCE MAIN, OR PIPE LINE CONVEYING RECLAIMED WATER SHALL BE LAID SO THE OUTSIDE OF THE WATERMAIN IS AT LEAST TWELVE INCHES ABOVE OR BELOW THE OUTSIDE OF THE OTHER PIPELINE. HOWEVER, IT IS PREFERABLE TO LAY THE WATERMAIN ABOVE THE OTHER PIPELINE.
3. AT THE UTILITY CROSSING DESCRIBED IN PARAGRAPH 1 AND 2 ABOVE, ONE FULL LENGTH OF WATERMAIN PIPE SHALL BE CENTERED ABOVE OR BELOW THE OTHER PIPELINE SO THE WATERMAIN JOINTS SHALL BE AS FAR AS POSSIBLE FROM THE OTHER PIPELINE. ALTERNATIVELY, AT SUCH CROSSINGS, THE PIPES SHALL BE ARRANGED SO THAT ALL WATERMAIN JOINTS ARE AT LEAST THREE FEET FROM ALL JOINTS IN VACUUM TYPE SANITARY SEWER, STORM SEWERS, STORMWATER FORCEMAINS, OR PIPELINES CONVEYING RECLAIMED WATER REGULATED UNDER PART III OF CHAPTER 62–610, F.A.C., AND AT LEAST SIX FEET FROM ALL JOINTS IN GRAVITY OR PRESSURE TYPE SANITARY SEWERS, WASTEWATER FORCEMAINS, OR PIPELINES CONVEYING RECLAIMED WATER NOT REGULATED UNDER PART III OF CHAPTER III 62–610, F.A.C.

WATER AND SEWER SEPARATION CRITERIA | 4

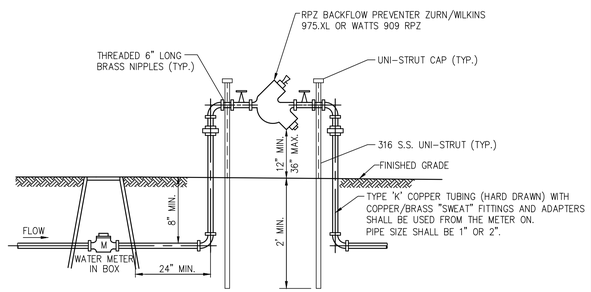

NOTE:
PROVIDE GUARD SHACK STEEL ENCLOSURE WITH GREEN VINYL COATING FOR PROTECTION.

BACKFLOW PREVENTION DEVICE – 3/4" TO 2" | 5

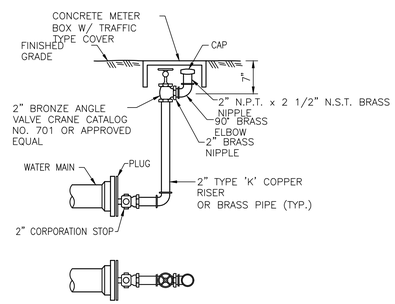

NOTES:
1. GALVANIZED PIPING AND FITTINGS SHALL NOT BE USED ON TEMPORARY OR PERMANENT BLOWOFFS.
2. MEGALUG RESTRAINED JOINTS REQUIRED ON WATERMAIN.

2" TERMINAL BLOWOFF | 6

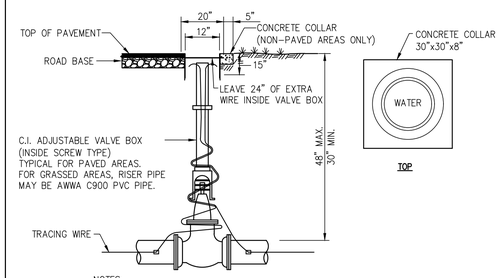

NOTES:
1. TOP OF LID MUST BE FLUSH WITH PAVEMENT OR CONCRETE COLLAR.
2. WHEN VALVE IS DEEPER THAN 36" AN EXTENSION WILL BE REQUIRED TO BRING OPERATING NUT TO 24" OF FINISHED GRADE. EXTENSION MUST BE SET SCREW TYPE AND ATTACHED TO OPERATING NUT.
3. OUTSIDE BOX SHALL BE UNITED STATES FOUNDRY NO. 7630 WITH TYPE FD LID. LID SHALL BE CAST WITH THE WORDS: "WATER" OR "RAW WATER".
4. USE NYLON CABLE TIES TO SECURE TRACE WIRE TO OUTSIDE OF VALVE EXTENSION AND CABLE TIE BEHIND EACH BELL.
5. SEE NOTES ON DETAIL NO. 3, THIS SHEET.

VALVE SETTING | 7

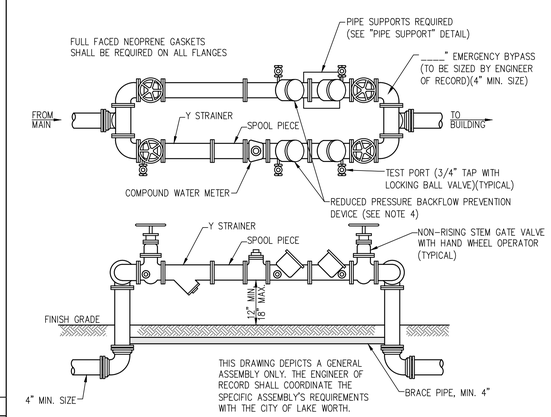

NOTES:
1. MECHANICAL JOINT FITTINGS SHALL BE REQUIRED UNDERGROUND AND FLANGED FITTINGS FOR ABOVE GROUND USE, NO UNIFLANGES PERMITTED.
2. PAINT THE ABOVE GROUND ASSEMBLY IN ACCORDANCE WITH CONSTRUCTION STANDARD, AFTER MANUFACTURERS RECOMMENDED SURFACE PREP IS COMPLETED. DO NOT PAINT OVER NAME/SERIAL PLATE, STAINLESS STEEL OR BRASS FITTINGS.
3. PROTECTIVE PIPE STANCHIONS ARE REQUIRED.
4. APPROVED REDUCED PRESSURE BACKFLOW PREVENTER WITH SILICONE RUBBER SEAL RINGS OR DISKS:
   A. WILKENS MODEL 375 S, 4" TO 10"
   B. AMES MODEL 4000 SSSR, 4" TO 10"
   C. AMES MODEL 4000 SESR, 4" TO 10"
   D. AMES MODEL 4000 SSI, 4" TO 10"
5. 3" METER REQUIRES 4" BACKFLOW ASSEMBLY AND PIPING.
6. ALL TEST PORTS SHALL BE PLUGGED WITH BRASS PLUGS.
7. PROVIDE SPOOL PIECES DIRECTLY IN FRONT OF METER. MINIMUM LENGTH TO BE THREE PIPE DIAMETERS.
8. METER TO BE SUPPLIED BY CONTRACTOR. MODEL NUMBER TO BE DETERMINED BY CITY.

3" AND LARGER METER INSTALLATION AND BACKFLOW ASSEMBLY | 12

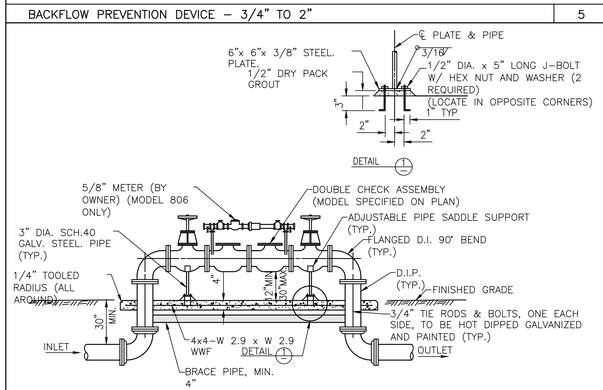

DOUBLE CHECK VALVE ASSEMBLY | 9

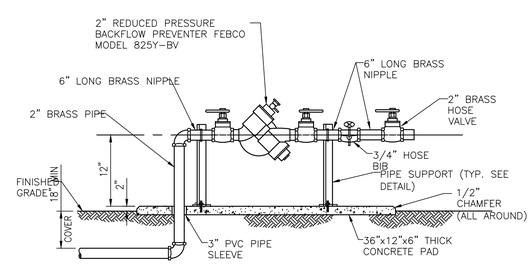

BACKFLOW PREVENTER WITH HOSE BIB | 10

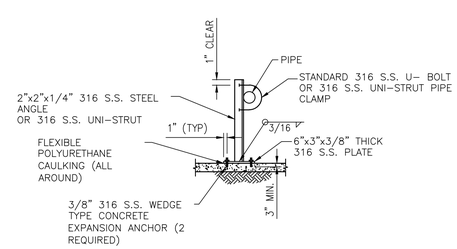

PIPE SUPPORT | 11

CDI
CIVIL DESIGN, INC.
Service Driven Design – Engineered Results
1400 Centrepark Blvd, Suite 905
West Palm Beach, FL 33401
T: 561.659.5760 F: 561.659.5772
www.civil-design.com
Registry No. 9664

DATUM = NAVD '88
NGVD '29 CONVERSION FACTOR = (+)1.54'

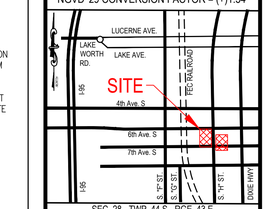

SEC. 28 - TWP. 44 S - RGE. 43 E
LOCATION MAP
N.T.S.

PINNACLE ON SIXTH

LAKE WORTH BEACH, FL

APPROVED BY:

T. Jeff Trompeter, State of Florida, Professional Engineer, License No. 51045. This item has been digitally signed and sealed by T. Jeff Trompeter on the date indicated here. Printed copies of this document are not considered signed and sealed and the signature must be verified on any electronic copies.

CDI PROJECT NO.
26974-01

DATE: 03/30/2026
DESIGNED: CDI
DRAWN: CDI

NO.	DATE	REVISION DESCRIPTION

POTABLE WATER & SANITARY SEWER DETAILS

C6.1

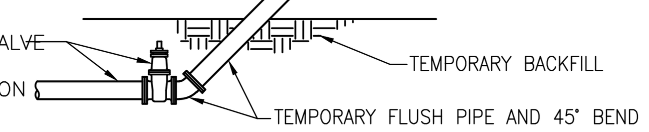

NOTES:

1. UPON COMPLETION OF THE PIPE INSTALLATION FOR ANY SECTION, THE MAINS SHALL BE PIGGED. CANNON FLUSHING MAY BE USED IN ADDITION TO PIGGING ONLY WITH THE APPROVAL OF THE ENGINEER. CANNON FLUSHING SHALL ACHIEVE A MINIMUM VELOCITY OF 2.5 FEET PER SECOND IN THE PIPE, FITTINGS, ETC.
2. INSTALL A 45° BEND AND ASSOCIATED PIPING AS SHOWN TO DIRECT THE FLUSHING WATER AWAY FROM THE IMMEDIATE WORK AREA AND EXERCISE DUE CARE SO AS TO ENSURE THAT THE WATER USED IN FLUSHING DOES NOT CAUSE A NUISANCE OR INFLICT PROPERTY DAMAGE.
3. BENDS AND PIPING SHALL BE THE SAME SIZE AS THE LINE TO BE FLUSHED.
4. PRIOR TO THE ACTUAL LINE FLUSHING OPERATION, THE CONTRACTOR SHALL PROPERLY NOTIFY THE ENGINEER OF SUCH INTENDED WATER USE.
5. NO EXISTING VALVES SHALL BE TURNED ON OR OFF, EXCEPT BY AUTHORIZED UTILITY PERSONNEL.
6. PIGGING AND FLUSHING SHALL NOT BE ACCOMPLISHED WITHOUT THE ACTUAL PRESENCE OF THE ENGINEER.
7. AFTER THE LINE UNDER CONSTRUCTION HAS BEEN SUCCESSFULLY PIGGED AND FLUSHED, THE CONTRACTOR SHALL REMOVE THE TEMPORARY PIPING ARRANGEMENT AND PROCEED WITH THE REMAINING CONSTRUCTION AS SPECIFIED.

PIGGING AND CANNON FLUSHING — 1

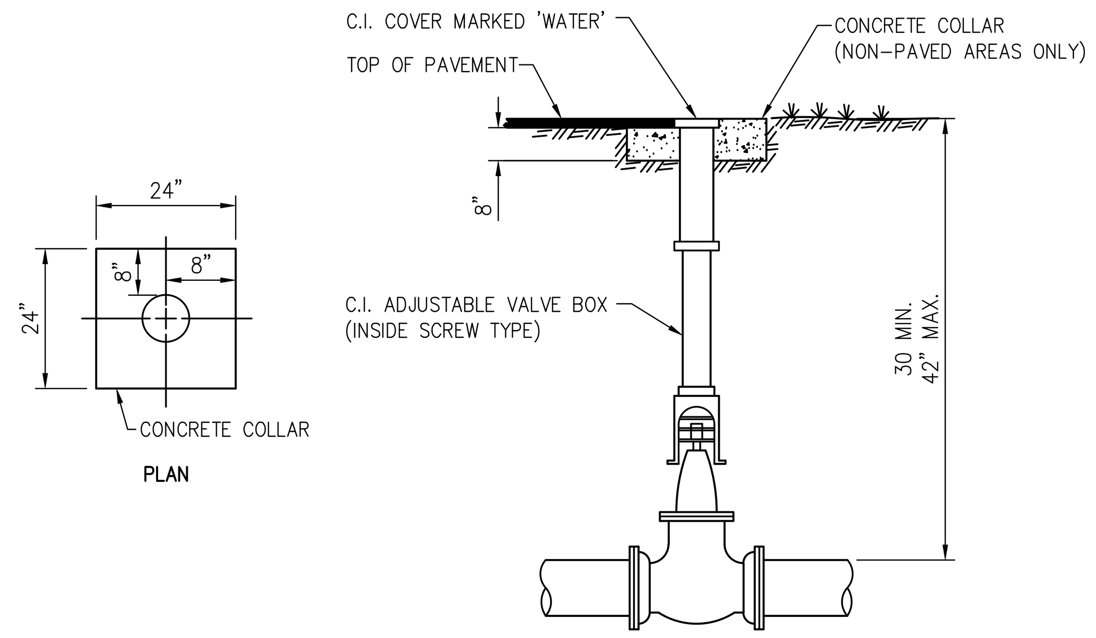

VALVE SETTING — 2

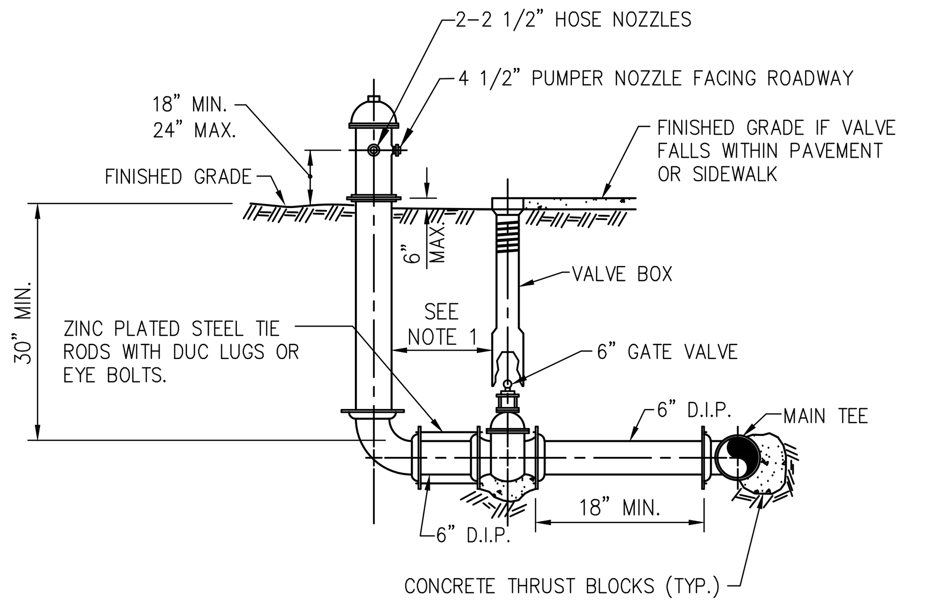

NOTE:
1. ON RUNS LONGER THAN 60' ANOTHER VALVE IS REQUIRED.
2. MEGALUGS REQUIRED ON ALL JOINTS.

FIRE HYDRANT INSTALLATION — 3

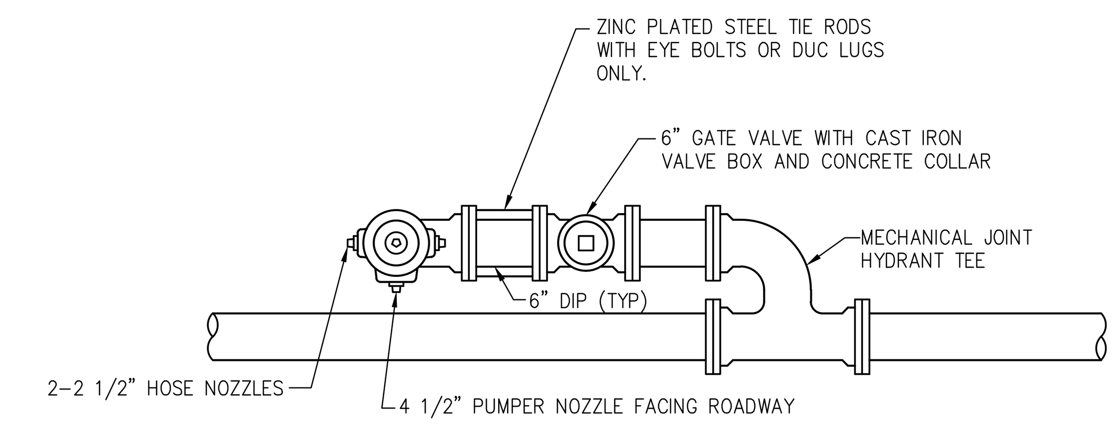

NOTE:
MEGALUGS REQUIRED ON ALL JOINTS.

FIRE HYDRANT INSTALLATION PARALLEL TO WATERMAIN — 4

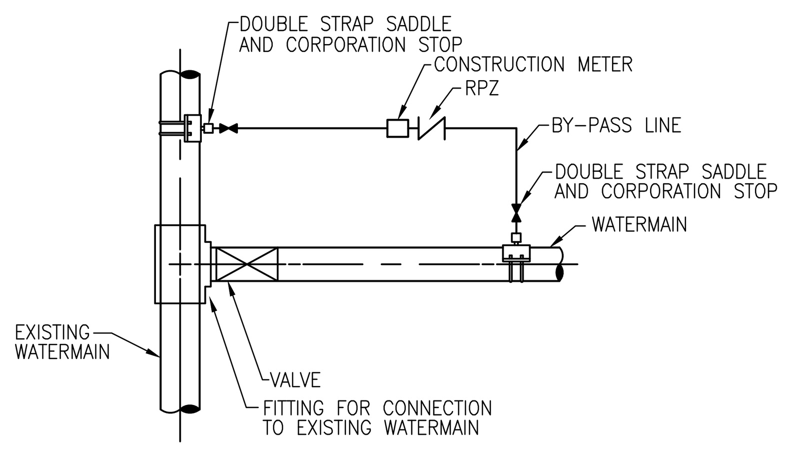

1. PERFORM PRESSURE AND LEAKAGE TEST ON TAPPING SLEEVE AND TAPPING VALVE (WHEN USED) PRIOR TO MAKING TAP.
2. ALL WATER FOR FLUSHING, PRESSURE AND LEAKAGE TESTS, AND BACTERIOLOGICAL CLEARANCE MUST BE FROM THE "BY–PASS" LINE WITH CHECK VALVE IN PLACE.
3. DURING ALL PRESSURE AND LEAKAGE TESTS, BOTH CORPORATION STOPS ON THE "BY–PASS" LINE MUST BE CLOSED.
4. THE UTILITY COMPANY SUPPLYING THE WATER SHALL BE NOTIFIED BEFORE FILLING AND FLUSHING. ONLY THE UTILITY COMPANY SHALL OPERATE THE VALVES.
5. DOUBLE STRAP SADDLES ARE NOT REQUIRED WHEN CONNECTING TO DUCTILE IRON PIPE.
6. CONNECT PRESSURE TEST PUMP TO SERVICE LINE OR BLOWOFF. NO EXTRA TAPS ARE PERMITTED UNLESS NEITHER A SERVICE LINE OR BLOWOFF ARE PRESENT IN THE TEST SECTION.
7. WATERMAIN VALVES CANNOT BE OPENED UNTIL THE ENTIRE SYSTEM HAS BEEN CLEARED BY THE GOVERNING PERMITTING AGENCY.
8. REMOVE THE "BY–PASS" LINE AFTER THE MAIN HAS BEEN CLEARED. PLUG CORPORATION STOP WITH THREADED BRASS PLUG.
9. INSTALL ADJUSTABLE CAST IRON VALVE BOX ON THE VALVE.

DOUBLE VALVE CONNECTION — 5

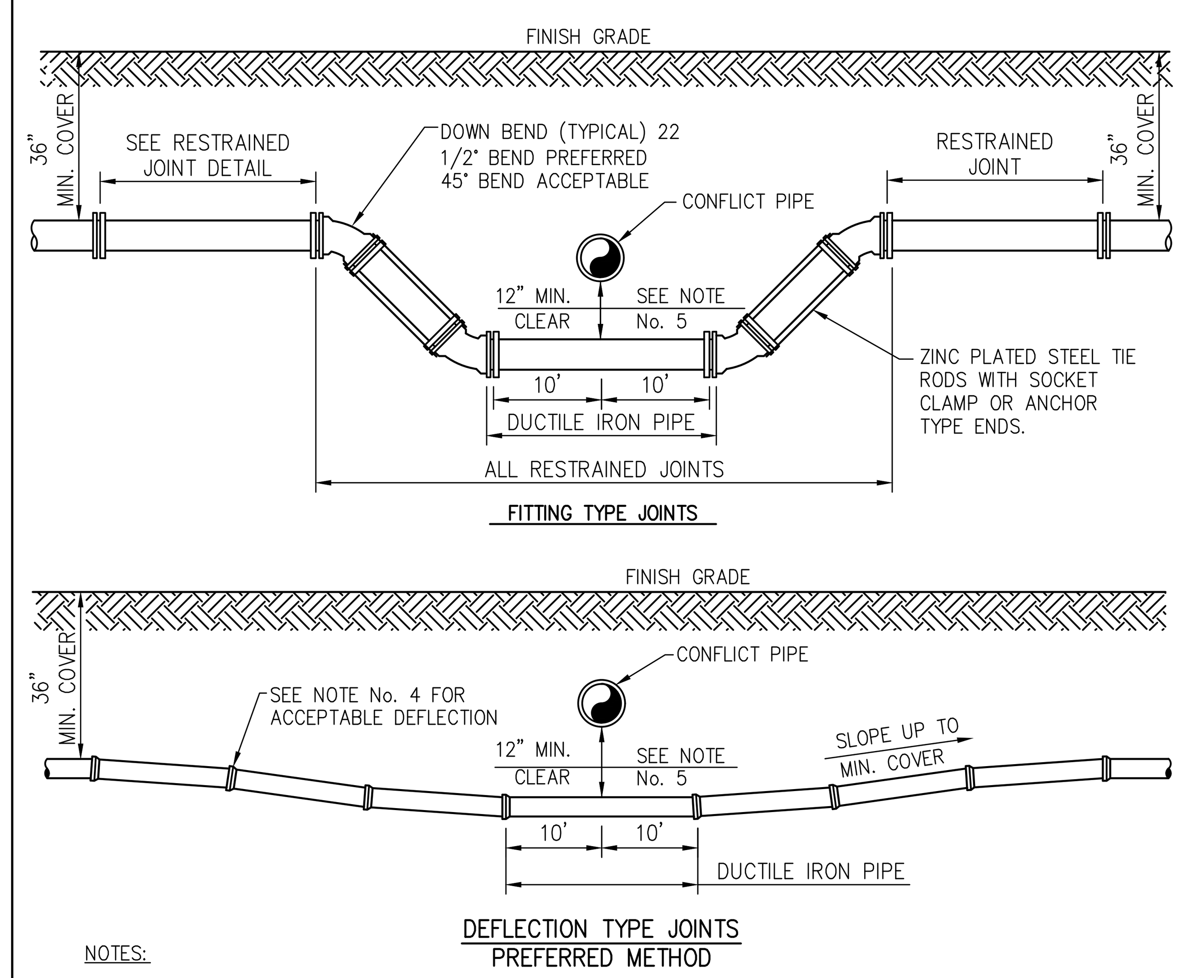

DEFLECTION TYPE JOINTS
PREFERRED METHOD

NOTES:

1. THERE SHALL BE, IN ALL CASES, A MINIMUM OF 12" SEPARATION BETWEEN WATER MAINS AND FORCE MAINS.
2. WHEREVER POSSIBLE WATER MAINS SHALL PASS OVER FORCE MAINS OR STORM SEWERS.
3. FITTINGS SHALL BE RESTRAINED WITH MEGALUGS AND TIE RODS BETWEEN OFFSET FITTINGS. THRUST BLOCKS SHALL ONLY BE USED WITH THE APPROVAL OF THE ENGINEER.
4. THE DEFLECTION TYPE CROSSING IS PREFERRED. SEE SPECIFICATIONS AND MANUFACTURER'S SUBMITTAL FOR MAXIMUM DEFLECTION ALLOWED.
5. A MINIMUM OF 12" VERTICAL SEPARATION BETWEEN WATER MAINS AND STORM SEWERS SHALL BE MAINTAINED. WHERE THIS IS NOT POSSIBLE WATER MAIN SHALL BE D.I.P. WITH NO LESS THAN 6" SEPARATION.

PRESSURE PIPE CONFLICT — 6

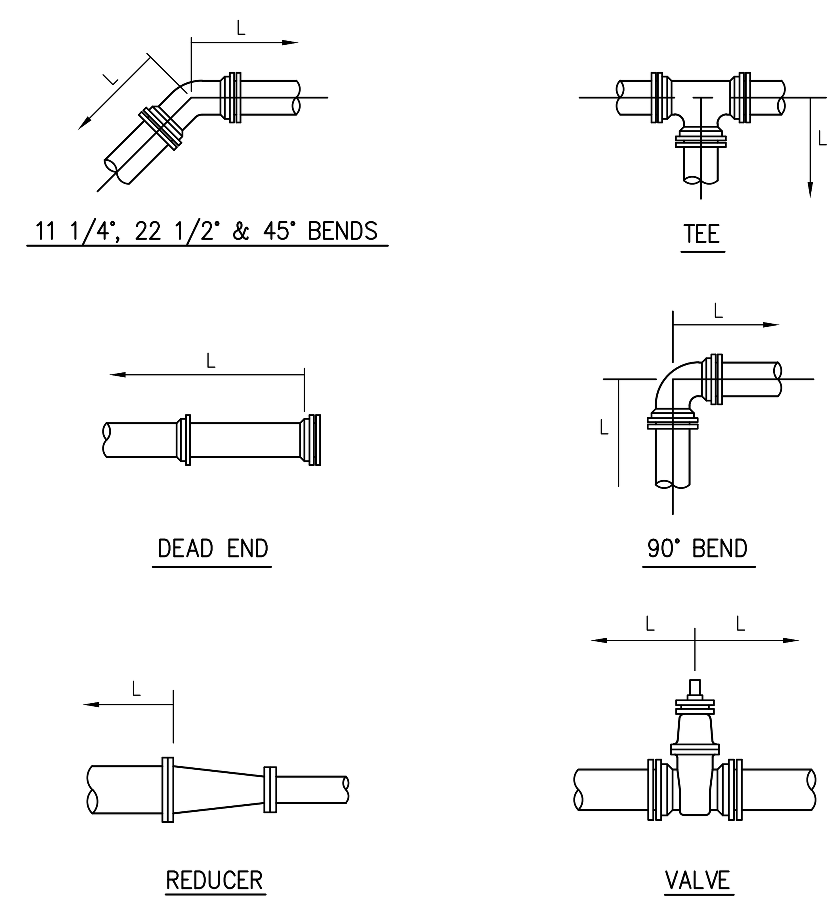

NOTES:

1. LENGTH 'L' IS IN FEET.
2. RESTRAINED LENGTHS ARE BASED ON THE FOLLOWING:
   .A. 150 PSI TEST PRESSURE
   .B. MIN. 30" COVER.
   .C. PVC – PIPE SIZES 4" – 12". PVC/DI
   DI – PIPE SIZES 4" – 48".
   .D. SANDY SOIL.
   .E. SAFETY FACTOR OF 1.5.
3. LENGTH 'L' SHOWN IN THE TABLE TO BE RESTRAINED IN THE DIRECTION OF THE ARROWS.

RESTRAINED PIPE JOINTS — 7

FITTING TYPE		PIPE SIZE 4"	6"	8"	10"	12"	14"	16"	18"	20"	24"	30"	36"	42"	48"
90° HORIZ. BEND		17/14	24/20	31/25	36/30	42/35	40	44	49	53	61	71	80	89	96
45° HORIZ. BEND		7/6	10/8	13/11	15/12	18/15	16	18	20	22	25	29	33	37	40
22.5° HORIZ. BEND		3/3	5/4	6/5	7/6	8/7	8	9	10	10	12	14	16	18	19
11.25° HORIZ. BEND		2/1	2/2	3/3	4/3	4/3	4	4	5	5	6	7	8	9	10
45° VERT. OFFSET	UPPER BEND	19/12	27/17	35/22	42/27	50/32	36	40	44	48	55	67	77	86	95
	LOWER BEND	5/4	7/6	9/8	11/9	13/11	12	14	15	17	19	23	26	29	32
22.5° VERT. OFFSET	UPPER BEND	9/6	13/8	17/11	20/13	24/15	17	19	21	23	27	32	37	41	46
	LOWER BEND	2/2	3/3	4/4	5/4	6/5	6	7	7	8	9	11	13	14	15
11.25° VERT. OFFSET	UPPER BEND	5/3	6/4	8/5	10/6	12/7	9	10	11	12	13	16	18	21	23
	LOWER BEND	1/1	2/1	2/2	3/2	3/3	3	3	4	4	5	5	6	7	8
DEAD END AND INLINE VALVE		46/30	65/42	85/54	02/65	20/76	86	97	107	117	136	162	186	208	229
TEE (BRANCH RESTRAINT)	4"x	21/13	8/5	1/1	1/1	1/1	–	–	–	–	–	–	–	–	–
	6"x	–	39/25	30/19	20/13	10/7	1	1	1	1	1	1	–	–	–
	8"x	–	–	59/37	51/32	44/28	23	17	12	6	1	1	1	–	–
	10"x	–	–	–	75/47	69/44	40	35	31	26	17	1	1	–	–
	12"x	–	–	–	–	93/59	55	52	48	44	36	23	8	1	1
	14"x	–	–	–	–	–	69	66	63	59	53	41	29	15	1
	16"x	–	–	–	–	–	–	79	76	74	68	58	47	35	23
	18"x	–	–	–	–	–	–	–	89	86	81	73	63	53	42
	20"x	–	–	–	–	–	–	–	–	99	94	86	78	69	59
	24"x	–	–	–	–	–	–	–	–	–	117	111	104	97	88
	30"x	–	–	–	–	–	–	–	–	–	–	143	137	132	125
	36"x	–	–	–	–	–	–	–	–	–	–	–	167	162	157
	42"x	–	–	–	–	–	–	–	–	–	–	–	–	188	184
	48"x	–	–	–	–	–	–	–	–	–	–	–	–	–	209
REDUCER (LARGER PIPE RESTRAINT)	6"x	34/21	–	–	–	–	–	–	–	–	–	–	–	–	–
	8"x	61/39	34/23	–	–	–	–	–	–	–	–	–	–	–	–
	10"x	83/53	63/40	34/22	–	–	–	–	–	–	–	–	–	–	–
	12"x	104/66	87/55	64/40	59/37	–	–	–	–	–	–	–	–	–	–
	14"x	–	69	56	54	22	–	–	–	–	–	–	–	–	–
	16"x	–	82	71	69	41	22	–	–	–	–	–	–	–	–
	18"x	–	–	84	82	58	41	22	–	–	–	–	–	–	–
	20"x	–	–	–	95	73	58	41	22	–	–	–	–	–	–
	24"x	–	–	–	–	100	88	74	58	41	–	–	–	–	–
	30"x	–	–	–	–	134	125	114	102	88	57	–	–	–	–
	36"x	–	–	–	–	–	–	–	–	127	102	56	–	–	–
	42"x	–	–	–	–	–	–	–	–	159	138	101	54	–	–
	48"x	–	–	–	–	–	–	–	–	–	–	138	99	53	–

MECHANICAL THRUST RESTRAINT – MINIMUM PIPE LENGTHS — 8

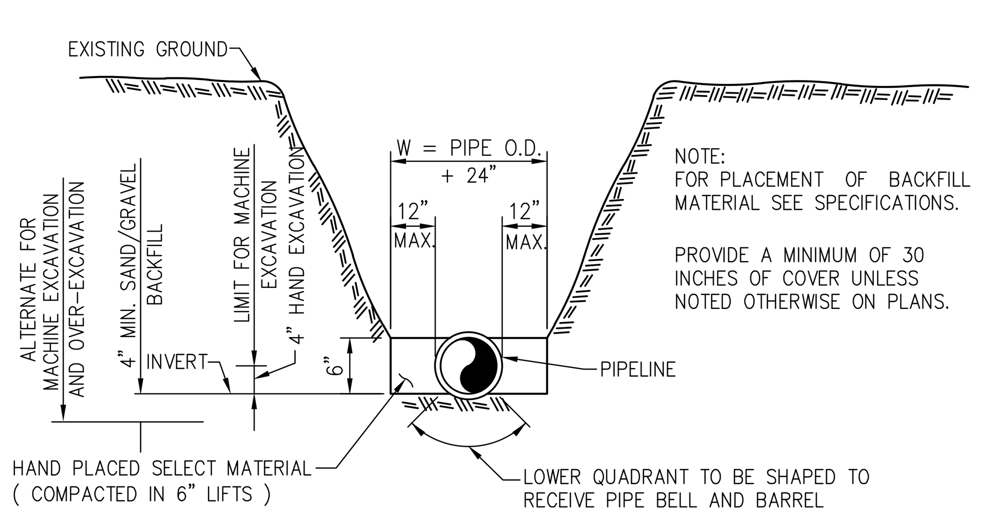

NOTE:
FOR PLACEMENT OF BACKFILL MATERIAL SEE SPECIFICATIONS.

PROVIDE A MINIMUM OF 30 INCHES OF COVER UNLESS NOTED OTHERWISE ON PLANS.

TRENCHING — 9

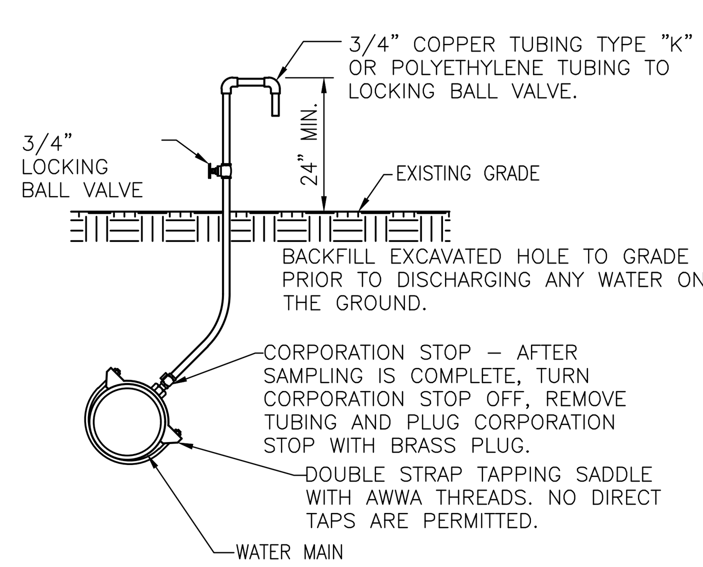

SAMPLING POINT — 10

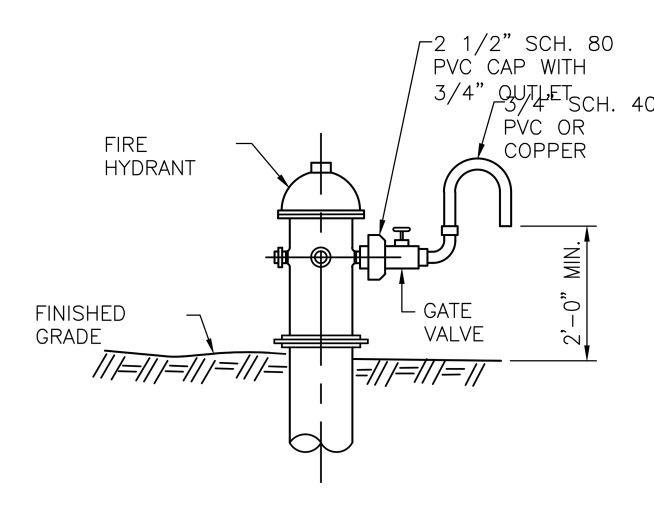

SAMPLE POINT ON FIRE HYDRANT — 11

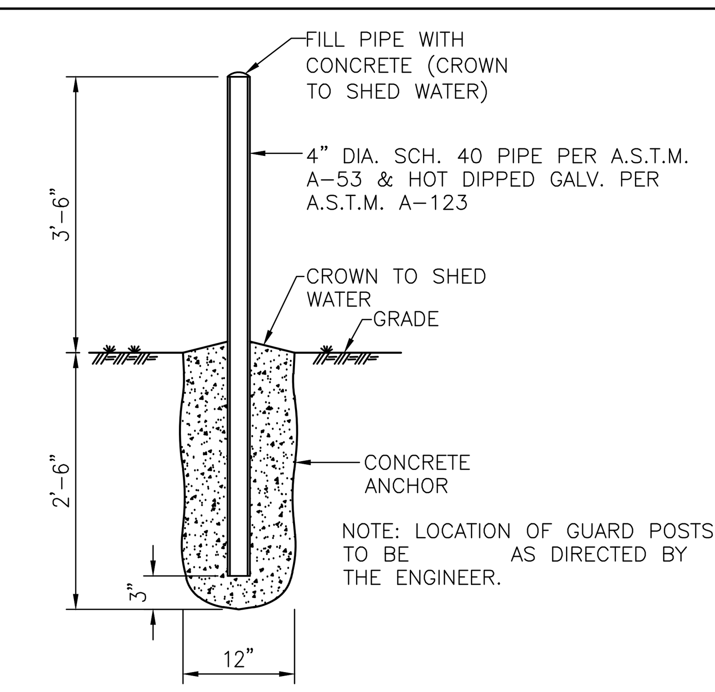

NOTE: LOCATION OF GUARD POSTS TO BE AS DIRECTED BY THE ENGINEER.

GUARD POST — 12

CIVIL DESIGN, INC.
Service Driven Design ~ Engineered Results
1400 Centrepark Blvd, Suite 905
West Palm Beach, FL 33401
T: 561.659.5760 F: 561.659.5772
www.civil-design.com
Registry No. 9664

DATUM = NAVD '88
NGVD '29 CONVERSION FACTOR = (+)1.54'

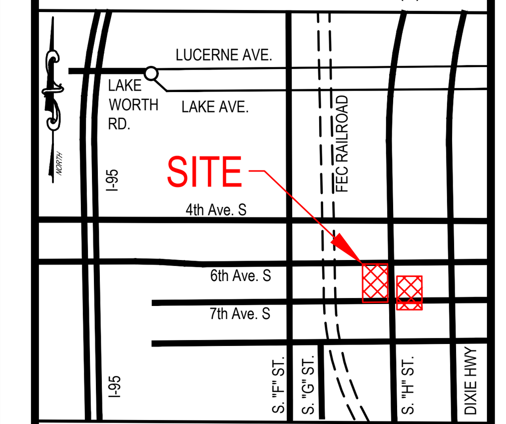

SEC. 28 - TWP. 44 S - RGE. 43 E
LOCATION MAP
N.T.S.

PINNACLE ON SIXTH

LAKE WORTH BEACH, FL

APPROVED BY:

T. Jeff Trompeter, State of Florida, Professional Engineer, License No. 51045. This item has been digitally signed and sealed by T. Jeff Trompeter on the date indicated here. Printed copies of this document are not considered signed and sealed and the signature must be verified on any electronic copies.

CDI PROJECT NO.
26974-01

DATE: 03/30/2026
DESIGNED: CDI
DRAWN: CDI

NO.	DATE	REVISION DESCRIPTION

POTABLE WATER & SANITARY SEWER DETAILS

C6.2

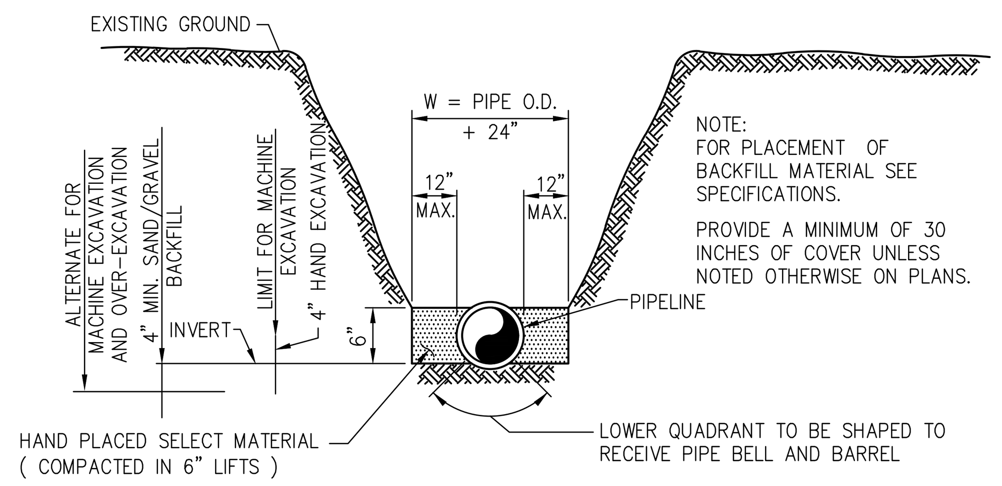

TRENCHING | 1

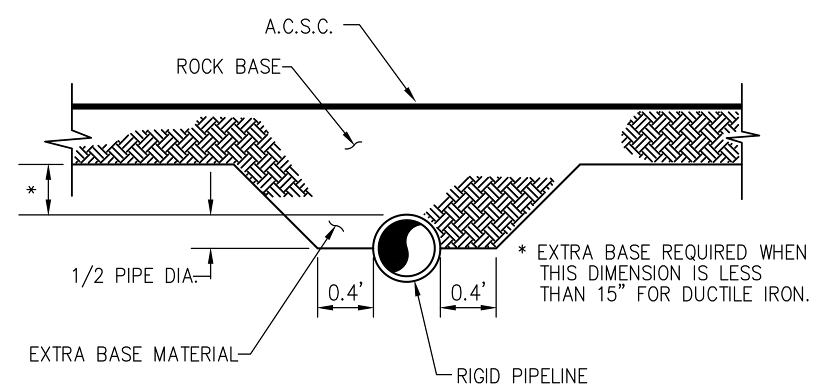

EXTRA BASE MATERIAL FOR SHALLOW PIPES IN ROADWAYS | 2

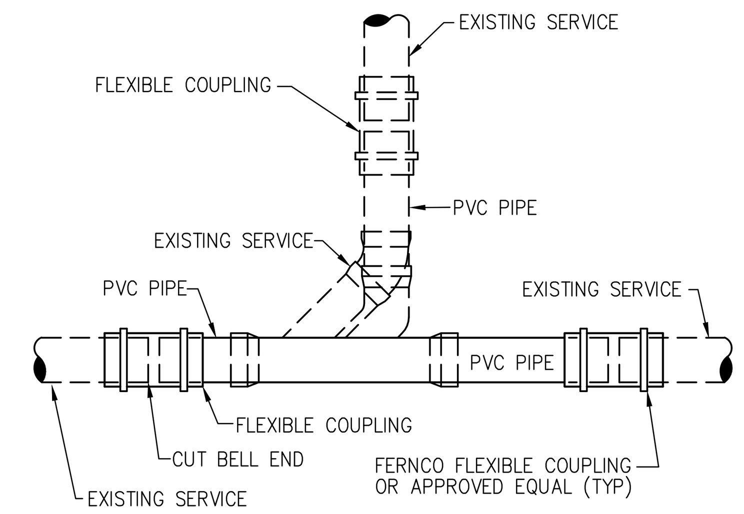

PIPE SECTION REPLACEMENT | 3

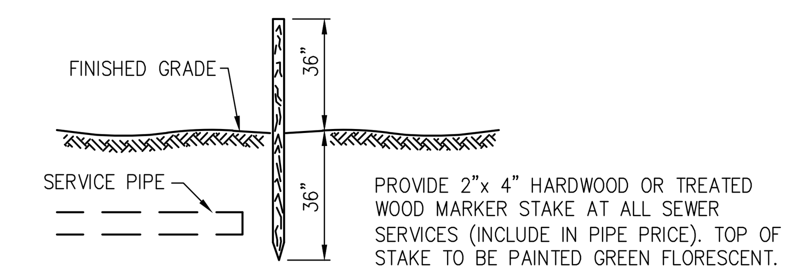

MARKER STAKE | 4

HORIZONTAL SEPARATION BETWEEN UNDERGROUND WATERMAINS AND SANITARY OR STORM SEWERS, WASTEWATER OR STORMWATER FORCE MAINS, RECLAIMED WATER PIPELINES AND ON SITE SEWAGE TREATMENT AND DISPOSAL SYSTEMS.

1. NEW OR RELOCATED UNDERGROUND WATERMAINS SHALL BE LAID TO PROVIDE A HORIZONTAL DISTANCE OF AT LEAST THREE FEET BETWEEN THE OUTSIDE OF THE WATERMAIN AND THE OUTSIDE OF ANY EXISTING OR PROPOSED SEWER, STORMWATER FORCEMAIN, OR PIPELINE CONVEYING RECLAIMED WATER REGULATED UNDER PART III OF CHAPTER 2–610, F.A.C.
2. NEW OR RELOCATED UNDERGROUND WATERMAINS SHALL BE LAID TO PROVIDE A HORIZONTAL DISTANCE OF AT LEAST THREE FEET, AND PREFERABLY TEN FEET, BETWEEN THE OUTSIDE OF THE WATERMAIN AND THE OUTSIDE OF ANY EXISTING OR PROPOSED VACUUM–TYPE SANITARY SEWER.
3. NEW OR RELOCATED UNDERGROUND WATERMAINS SHALL BE LAID TO PROVIDE A HORIZONTAL DISTANCE OF AT LEAST SIX, AND PREFERABLY TEN FEET, BETWEEN THE OUTSIDE OF THE WATERMAIN AND THE OUTSIDE OF ANY EXISTING OR PROPOSED GRAVITY OR PRESSURE TYPE SANITARY SEWER, WASTEWATER FORCEMAIN, OR PIPELINE CONVEYING RECLAIMED WATER NOT REGULATED UNDER PART III OF CHAPTER 62–610, F.A.C. THE MINIMUM HORIZONTAL SEPARATION BETWEEN WATERMAINS AND GRAVITY TYPE SANITARY SEWERS SHALL BE REDUCED TO THREE FEET WHERE THE BOTTOM OF THE WATERMAIN IS LAID AT LEAST SIX INCHES ABOVE THE TOP OF THE SEWER.
4. NEW OR RELOCATED UNDERGROUND WATERMAINS SHALL BE LAID TO PROVIDE A MINIMUM HORIZONTAL DISTANCE OF AT LEAST TEN FEET BETWEEN THE OUTSIDE OF THE WATERMAIN AND ALL PARTS OF ANY EXISTING OR PROPOSED 'ON SITE SEWAGE TREATMENT AND DISPOSAL SYSTEM' AS DEFINED IN SECTION 381.0065(2), F.S. AND RULE 64E–6.002, F.A.C.

VERTICAL SEPARATION BETWEEN UNDERGROUND WATERMAINS AND SANITARY OR STORM SEWERS, WASTEWATER OR STORMWATER FORCEMAINS, AND RECLAIMED WATER PIPELINES.

1. NEW OR RELOCATED UNDERGROUND WATERMAINS CROSSING ANY EXISTING OR PROPOSED GRAVITY OR VACUUM TYPE SANITARY OR STORM SEWER SHALL BE LAID SO THE OUTSIDE OF THE WATERMAIN IS AT LEAST SIX INCHES, AND PREFERABLY TWELVE INCHES ABOVE, OR AT LEAST TWELVE INCHES BELOW THE OUTSIDE OF THE OTHER PIPELINE. HOWEVER, IT IS PREFERABLE TO LAY THE WATERMAIN ABOVE THE OTHER PIPELINE.
2. NEW OR RELOCATED UNDERGROUND WATERMAINS CROSSING ANY EXISTING OR PROPOSED PRESSURE TYPE SANITARY SEWER, WASTEWATER OR STORMWATER FORCE MAIN, OR PIPE LINE CONVEYING RECLAIMED WATER SHALL BE LAID SO THE OUTSIDE OF THE WATERMAIN IS AT LEAST TWELVE INCHES ABOVE OR BELOW THE OUTSIDE OF THE OTHER PIPELINE. HOWEVER, IT IS PREFERABLE TO LAY THE WATERMAIN ABOVE THE OTHER PIPELINE.
3. AT THE UTILITY CROSSING DESCRIBED IN PARAGRAPH 1 AND 2 ABOVE, ONE FULL LENGTH OF WATERMAIN PIPE SHALL BE CENTERED ABOVE OR BELOW THE OTHER PIPELINE SO THE WATERMAIN JOINTS SHALL BE AS FAR AS POSSIBLE FROM THE OTHER PIPELINE. ALTERNATIVELY, AT SUCH CROSSINGS, THE PIPES SHALL BE ARRANGED SO THAT ALL WATERMAIN JOINTS ARE AT LEAST THREE FEET FROM ALL JOINTS IN VACUUM TYPE SANITARY SEWER, STORM SEWERS, STORMWATER FORCEMAINS, OR PIPELINES CONVEYING RECLAIMED WATER REGULATED UNDER PART III OF CHAPTER 62–610, F.A.C., AND AT LEAST SIX FEET FROM ALL JOINTS IN GRAVITY OR PRESSURE TYPE SANITARY SEWERS, WASTEWATER FORCEMAINS, OR PIPELINES CONVEYING RECLAIMED WATER NOT REGULATED UNDER PART III OF CHAPTER III 62–610, F.A.C.

WATER AND SEWER SEPARATION CRITERIA | 5

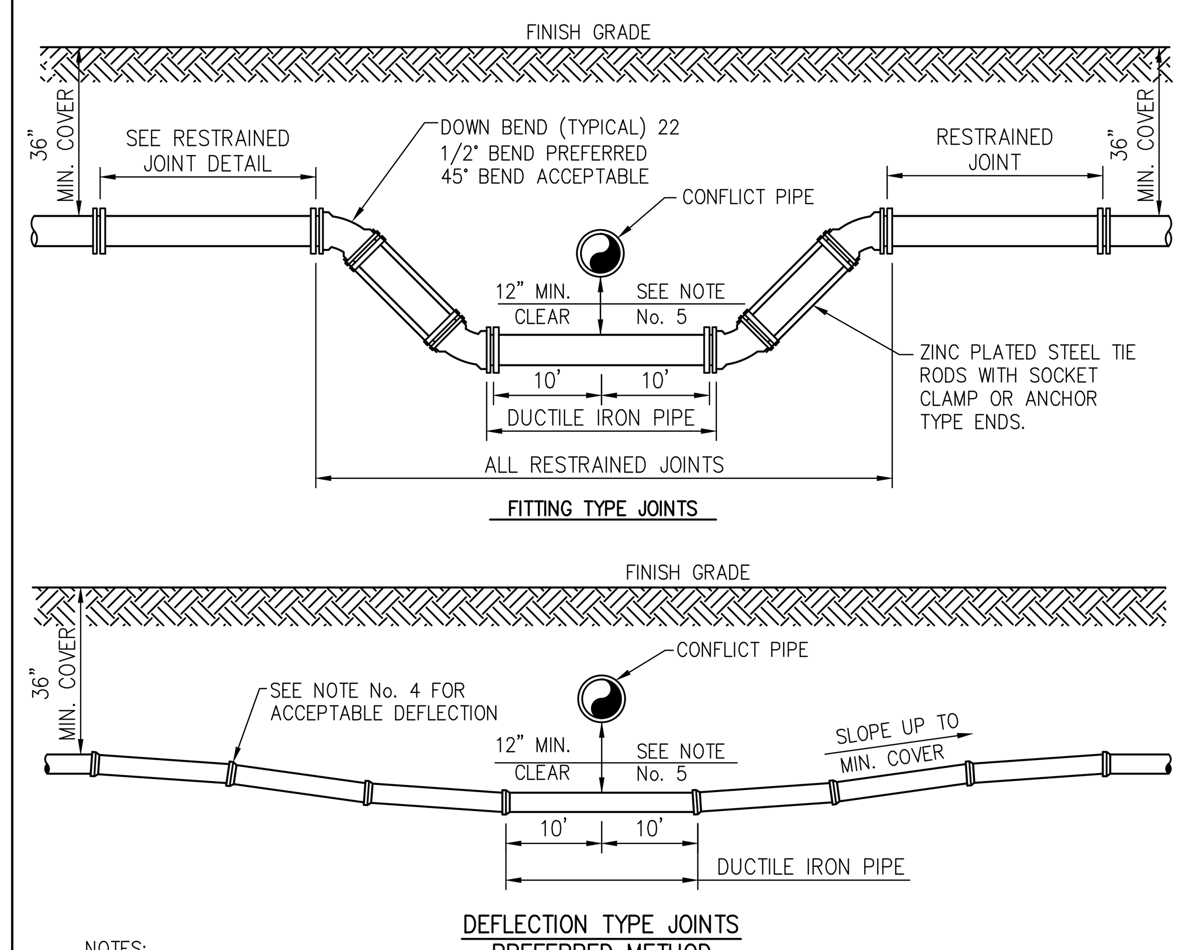

NOTES:

1. THERE SHALL BE, IN ALL CASES, A MINIMUM OF 12" SEPARATION BETWEEN WATER MAINS AND FORCE MAINS.
2. WHEREVER POSSIBLE WATER MAINS SHALL PASS OVER FORCE MAINS OR STORM SEWERS.
3. FITTINGS SHALL BE RESTRAINED WITH MEGALUGS AND TIE RODS BETWEEN OFFSET FITTINGS. THRUST BLOCKS SHALL ONLY BE USED WITH THE APPROVAL OF THE ENGINEER.
4. THE DEFLECTION TYPE CROSSING IS PREFERRED. SEE SPECIFICATIONS AND MANUFACTURER'S SUBMITTAL FOR MAXIMUM DEFLECTION ALLOWED.
5. A MINIMUM OF 12" VERTICAL SEPARATION BETWEEN WATER MAINS AND STORM SEWERS SHALL BE MAINTAINED. WHERE THIS IS NOT POSSIBLE WATER MAIN SHALL BE D.I.P. WITH NO LESS THAN 6" SEPARATION.

PRESSURE PIPE CONFLICT | 6

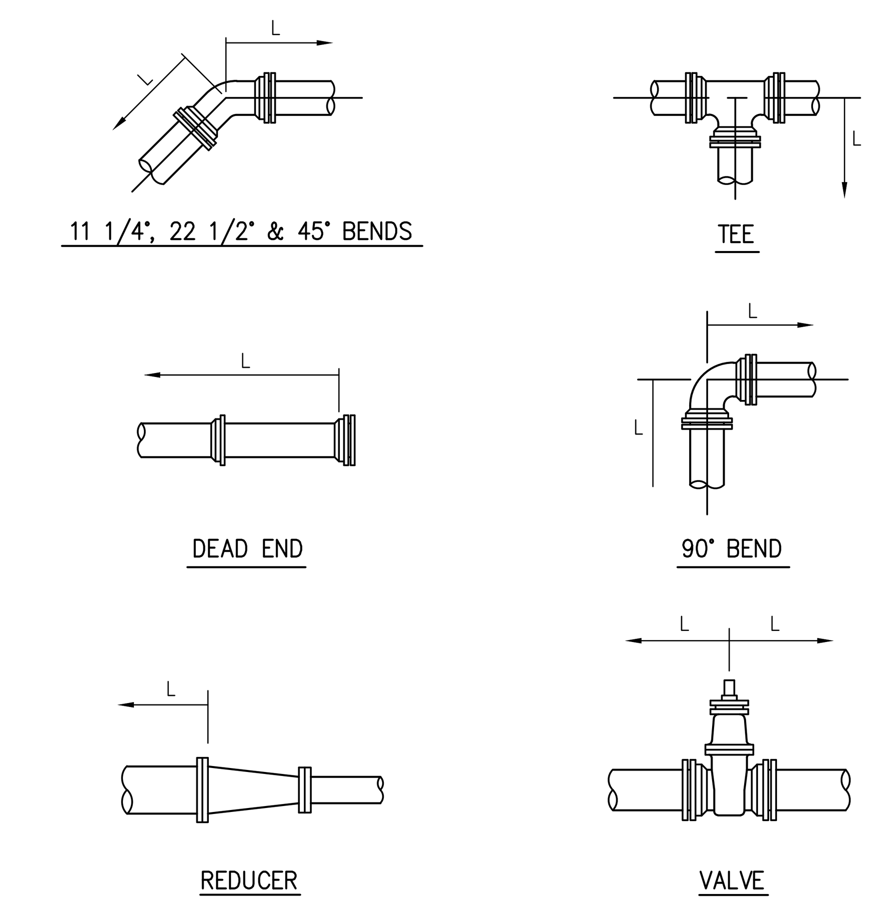

NOTES:

1. LENGTH 'L' IS IN FEET.
2. RESTRAINED LENGTHS ARE BASED ON THE FOLLOWING:
   .A. 150 PSI TEST PRESSURE
   .B. MIN. 30" COVER.
   .C. PVC – PIPE SIZES 4" – 12". PVC/DI
   DI – PIPE SIZES 4" – 48".
   .D. SANDY SOIL.
   .E. SAFETY FACTOR OF 1.5.
3. LENGTH 'L' SHOWN IN THE TABLE TO BE RESTRAINED IN THE DIRECTION OF THE ARROWS.

RESTRAINED PIPE JOINTS | 7

FITTING TYPE		PIPE SIZE													
		4"	6"	8"	10"	12"	14"	16"	18"	20"	24"	30"	36"	42"	48"
90° HORIZ. BEND		17/14	24/20	31/25	36/30	42/35	40	44	49	53	61	71	80	89	96
45° HORIZ. BEND		7/6	10/8	13/11	15/12	18/15	16	18	20	22	25	29	33	37	40
22.5° HORIZ. BEND		3/3	5/4	6/5	7/6	8/7	8	9	10	10	12	14	16	18	19
11.25° HORIZ. BEND		2/1	2/2	3/3	4/3	4/3	4	4	5	5	6	7	8	9	10
45° VERT. OFFSET	UPPER BEND	19/12	27/17	35/22	42/27	50/32	36	40	44	48	55	67	77	86	95
	LOWER BEND	5/4	7/6	9/8	11/9	13/11	12	14	15	17	19	23	26	29	32
22.5° VERT. OFFSET	UPPER BEND	9/6	13/8	17/11	20/13	24/15	17	19	21	23	27	32	37	41	46
	LOWER BEND	2/2	3/3	4/4	5/4	6/5	6	7	7	8	9	11	13	14	15
11.25° VERT. OFFSET	UPPER BEND	5/3	6/4	8/5	10/6	12/7	9	10	11	12	13	16	18	21	23
	LOWER BEND	1/1	2/1	2/2	3/2	3/3	3	3	4	4	5	5	6	7	8
DEAD END AND INLINE VALVE		46/30	65/42	85/54	102/65	120/76	86	97	107	117	136	162	186	208	229
TEE (BRANCH RESTRAINT)	4"x	21/13	8/5	1/1	1/1	1/1	–	–	–	–	–	–	–	–	–
	6"x	–	39/25	30/19	20/13	10/7	1	1	1	1	1	1	–	–	–
	8"x	–	–	59/37	51/32	44/28	23	17	12	6	1	1	1	–	–
	10"x	–	–	–	75/47	69/44	40	35	31	26	17	1	1	–	–
	12"x	–	–	–	–	93/59	55	52	48	44	36	23	8	1	1
	14"x	–	–	–	–	–	69	66	63	59	53	41	29	15	1
	16"x	–	–	–	–	–	–	79	76	74	68	58	47	35	23
	18"x	–	–	–	–	–	–	–	89	86	81	73	63	53	42
	20"x	–	–	–	–	–	–	–	–	99	94	86	78	69	59
	24"x	–	–	–	–	–	–	–	–	–	117	111	104	97	88
	30"x	–	–	–	–	–	–	–	–	–	–	143	137	132	125
	36"x	–	–	–	–	–	–	–	–	–	–	–	167	162	157
	42"x	–	–	–	–	–	–	–	–	–	–	–	–	188	184
	48"x	–	–	–	–	–	–	–	–	–	–	–	–	–	209
REDUCER (LARGER PIPE RESTRAINT)	6"x	34/21	–	–	–	–	–	–	–	–	–	–	–	–	–
	8"x	61/39	34/23	–	–	–	–	–	–	–	–	–	–	–	–
	10"x	83/53	63/40	34/22	–	–	–	–	–	–	–	–	–	–	–
	12"x	104/66	87/55	64/40	59/37	–	–	–	–	–	–	–	–	–	–
	14"x	–	69	56	54	22	–	–	–	–	–	–	–	–	–
	16"x	–	82	71	69	41	22	–	–	–	–	–	–	–	–
	18"x	–	–	84	82	58	41	22	–	–	–	–	–	–	–
	20"x	–	–	–	95	73	58	41	22	–	–	–	–	–	–
	24"x	–	–	–	–	100	88	74	58	41	–	–	–	–	–
	30"x	–	–	–	–	134	125	114	102	88	57	–	–	–	–
	36"x	–	–	–	–	–	–	–	–	127	102	56	–	–	–
	42"x	–	–	–	–	–	–	–	–	159	138	101	54	–	–
	48"x	–	–	–	–	–	–	–	–	–	–	138	99	53	–

MECHANICAL THRUST RESTRAINT – MINIMUM PIPE LENGTHS | 8

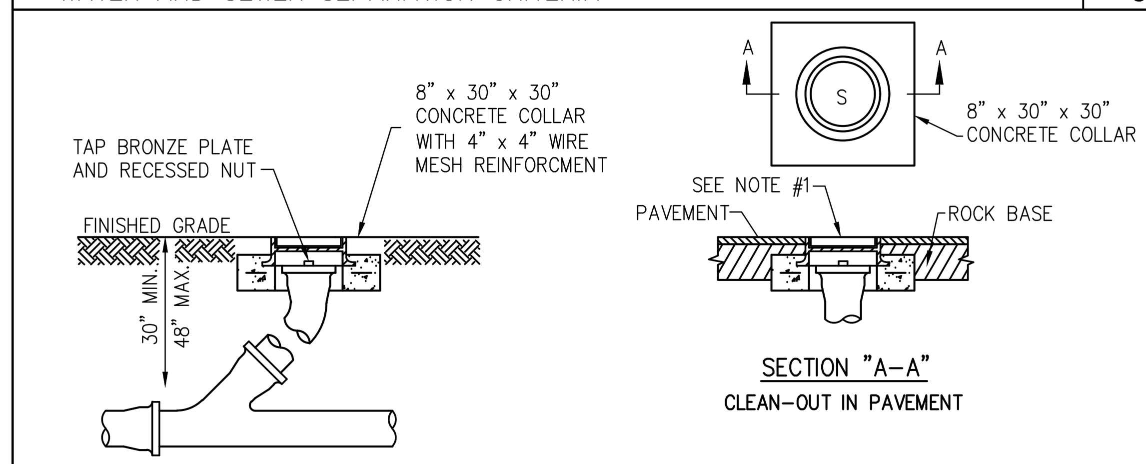

NOTES:

1. U.S. FOUNDRY NO. 7621 REVERSIBLE HANDHOLE RING AND COVER OR APPROVED EQUAL SHALL BE USED, COVER TO BE CAST WITH "S" IN THE CENTER.
2. CLEAN OUT REQUIRED ON ALL SERVICES AT PROPERTY LINE.
3. STANDARD WYE SHALL BE USED AT CLEAN OUT.
4. ALL PIPE AND CLENOUT SHALL BE 6" MIN.

CLEAN OUT | 9

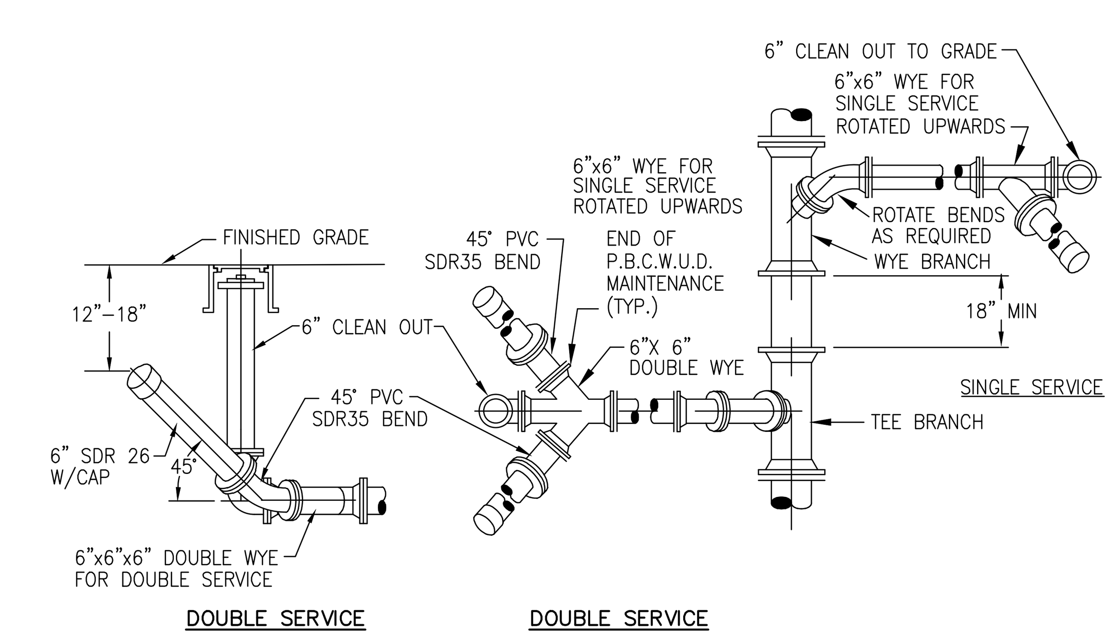

TYPICAL WASTEWATER SERVICE CONNECTION | 10

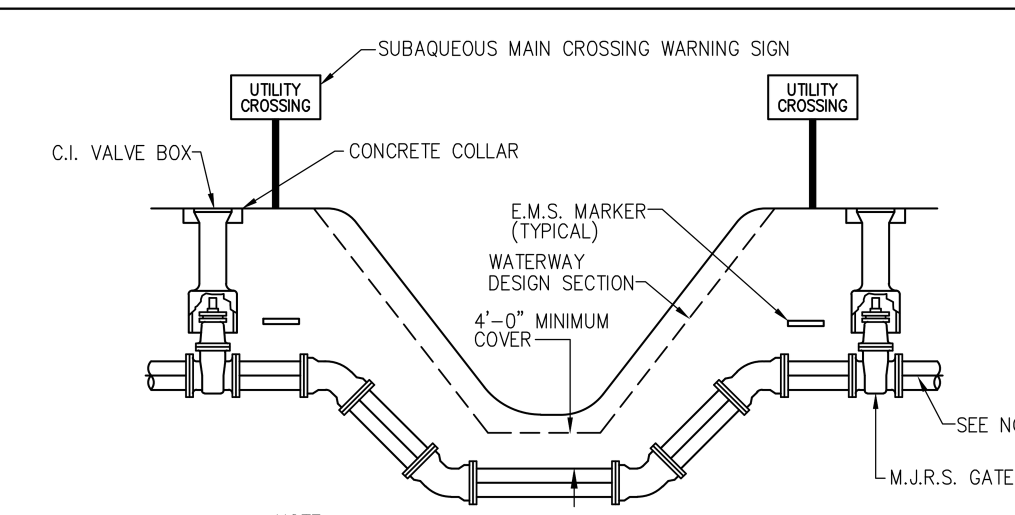

NOTE:

1. GATE VALVES TO BE TIED BACK TO THE NEAREST FITTING ON EACH SIDE. ALL TIE RODS AND BOLTS SHALL BE COATED WITH KOPPERS 300–M OR APPROVED EQUAL.
2. FITTINGS SHALL BE RESTRAINED WITH MEGALUGS AND TIE RODS BETWEEN OFFSET FITTINGS. THRUST BLOCKS SHALL ONLY BE USED WITH THE APPROVAL OF THE ENGINEER.

SUBAQUEOUS CROSSING | 11

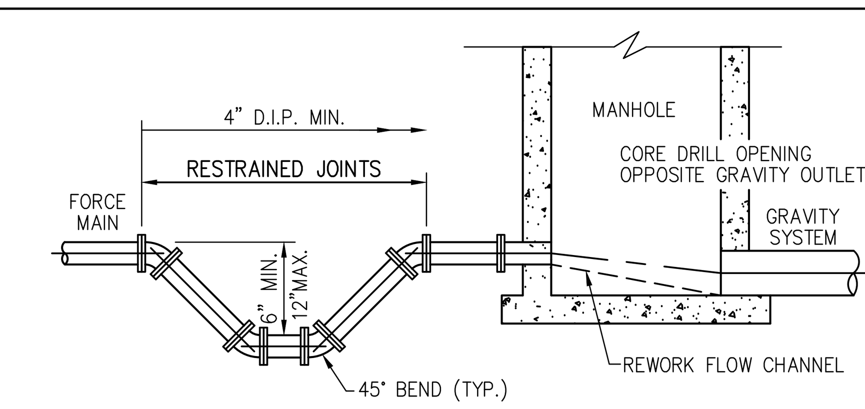

NOTES:

1. INVERT LEVEL OF FORCE MAIN AT POINT OF ENTRY SHALL BE 6" ABOVE INVERT OF MANHOLE.

FORCE MAIN ENTERING MANHOLE | 12

CIVIL DESIGN, INC.
Service Driven Design ~ Engineered Results
1400 Centrepark Blvd, Suite 905
West Palm Beach, FL 33401
T: 561.659.5760 F: 561.659.5772
www.civil-design.com
Registry No. 9664

DATUM = NAVD '88
NGVD '29 CONVERSION FACTOR = (+)1.54'

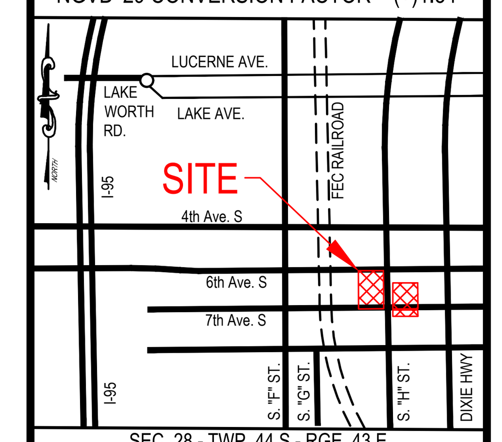

SEC. 28 - TWP. 44 S - RGE. 43 E
LOCATION MAP
N.T.S.

PINNACLE ON SIXTH

LAKE WORTH BEACH, FL

APPROVED BY:

T. Jeff Trompeter, State of Florida, Professional Engineer, License No. 51045. This item has been digitally signed and sealed by T. Jeff Trompeter on the date indicated here. Printed copies of this document are not considered signed and sealed and the signature must be verified on any electronic copies.

CDI PROJECT NO. 26974-01

DATE: 03/30/2026
DESIGNED: CDI
DRAWN: CDI

NO.	DATE	REVISION DESCRIPTION

POTABLE WATER & SANITARY SEWER DETAILS

C6.3

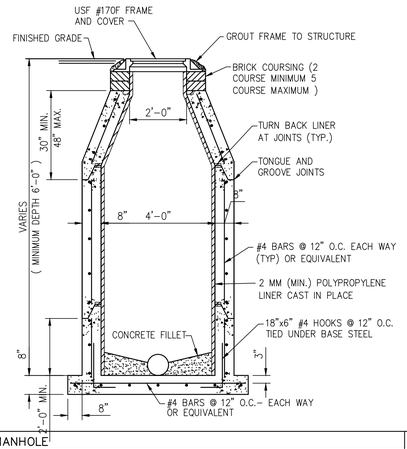

STANDARD MANHOLE | 1

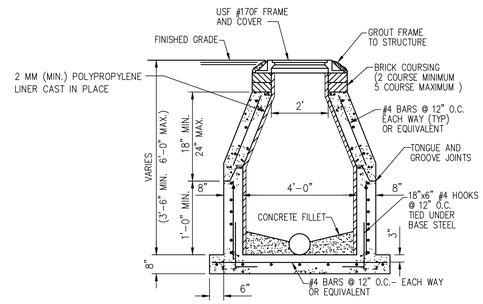

SHALLOW MANHOLE | 2

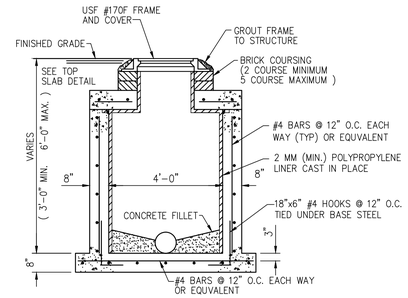

SHALLOW MANHOLE | 3

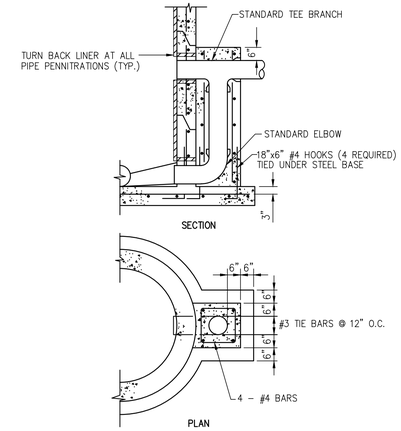

DROP CONNECTION | 4

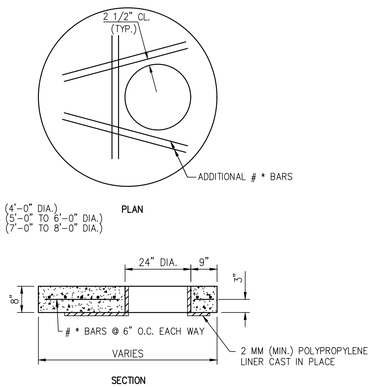

FLAT TOP SLAB | 5

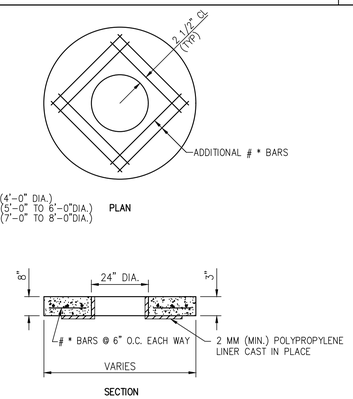

FLAT TOP SLAB | 6

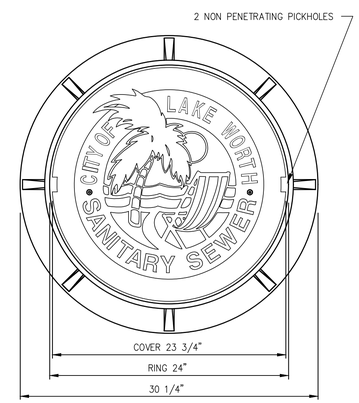

USF 170 RING & EU COVER | 7

NOTE: CITY TO DESIGNATE WHICH MANHOLE RING & COVER TO USE BASED ON LOCATION.

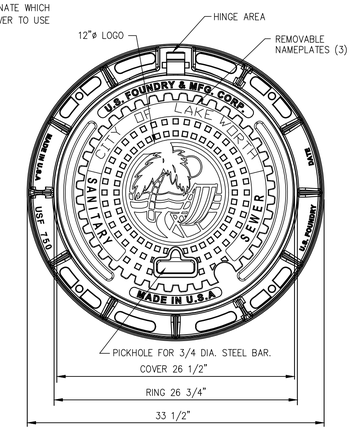

USF 750 RING & NH COVER | 8

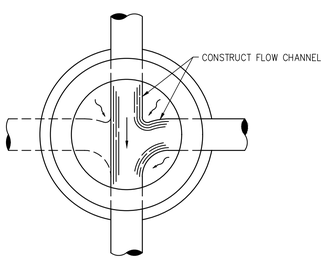

MANHOLE BOTTOM FOR TWO OR MORE INFLUENT LINES | 9

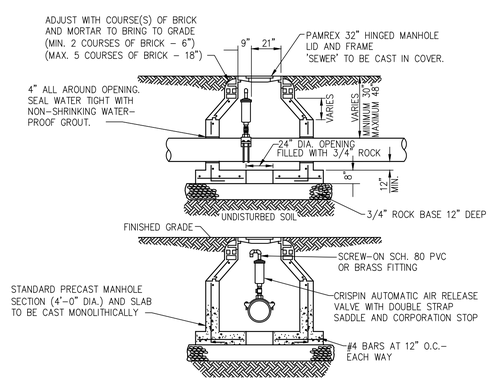

AIR RELEASE VALVE MANHOLE | 10

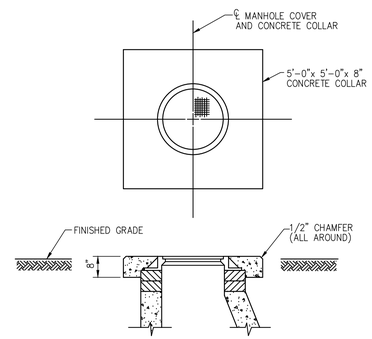

CONCRETE COLLAR (REQUIRED WHEN MANHOLE IS OUT OF PAVEMENT) | 11

1. REINFORCING STEEL ON ALL CONCRETE STRUCTURES SHALL HAVE A MINIMUM COVER OF 3 INCHES.
2. BRICK COURSING ON MANHOLES SHALL BE PLASTERED WITH 1/2 INCH CEMENT MORTAR ON THE INSIDE AND OUTSIDE FACES.
3.
4. THE DISTANCES AND CONTROLS SHOWN ON THE DRAWINGS REFER TO THE CENTERLINE OF THE MANHOLES.
5. COAT EXTERIOR AND INTERIOR SURFACES OF MANHOLES WITH KOPPERS 300–M OR EQUAL APPROVED BY THE ENGINEER. PROVIDE A MINIMUM DRY FILM THICKNESS OF 16 MILS. APPLY IN STRICT ACCORDANCE WITH THE MANUFACTURER'S RECOMMENDATIONS. INTERIOR COATING SHALL BE FIELD APPLIED AFTER FINAL LAMPING AND REVIEW BY THE ENGINEER.
6. STEPS ARE REQUIRED IN MANHOLES GREATER THAN 3 FEET IN DEPTH. STEPS SHALL BE SPACED 16 INCHES ON CENTER AND SHALL BE POLYPROPYLENE PLASTIC COATED NO.3 AS MANUFACTURED BY MA INDUSTRIES, INC. OR EQUAL APPROVED BY THE ENGINEER.
7. PVC FORCE MAIN PIPE SHALL BE WRAPPED WITH WIRE FOR LOCATING PURPOSES. A 14 GAUGE, THIN INSULATED, SOLID COPPER WIRE SHALL BE LAID IN THE PIPE TRENCH CONTINUOUS FROM VALVE BOX TO VALVE BOX. WIRE SHALL BE WRAPPED TWO TIMES AROUND EACH JOINT OF PIPE AND EXTENDED INSIDE EACH VALVE BOX TO ENABLE LOCATION DEVICES TO BE ATTACHED WITHOUT DIGGING UP THE VALVE BOX . WIRE CONNECTIONS SHALL BE MADE WITH COMMERCIAL CONNECTORS AND SEALED AGAINST MOISTURE WITH SCOTCH E–Z SEAL NO.2200 ELECTRICAL INSULATING PAD WITH VINYL BACKING.
8. DROP CONNECTIONS ON MANHOLES ARE REQUIRED WHENEVER AN INFLUENT SEWER IS LOCATED 2 FEET OR MORE ABOVE THE MAIN INVERT CHANNEL.
9. CAST IRON MANHOLE COVERS SHALL HAVE THE WORD 'SANITARY' CAST IN THEM IN RAISED LETTERS.

GENERAL NOTES | 12

CDI
CIVIL DESIGN, INC.
Service Driven Design – Engineered Results
1400 Centrepark Blvd, Suite 905
West Palm Beach, FL 33401
T: 561.659.5760 F: 561.659.5772
www.civil-design.com
Registry No. 9664

DATUM = NAVD '88
NGVD '29 CONVERSION FACTOR = (+)1.54'

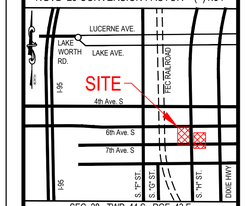

SEC. 28 - TWP. 44 S - RGE. 43 E
LOCATION MAP
N.T.S.

PINNACLE ON SIXTH

LAKE WORTH BEACH, FL

APPROVED BY:

T. Jeff Trompeter, State of Florida, Professional Engineer, License No. 51045. This item has been digitally signed and sealed by T. Jeff Trompeter on the date indicated here. Printed copies of this document are not considered signed and sealed and the signature must be verified on any electronic copies.

CDI PROJECT NO.
26974-01

DATE:	03/30/2026
DESIGNED:	CDI
DRAWN:	CDI

NO.	DATE	REVISION DESCRIPTION

POTABLE WATER & SANITARY SEWER DETAILS

C6.4

SURVEY REPORT:

1. THIS IS A BOUNDARY SURVEY, PREPARED IN ACCORDANCE WITH THE APPLICABLE PORTIONS OF THE STANDARDS OF PRACTICE SET FORTH IN RULE 5J–17.051 THROUGH 5J–17.053, FLORIDA ADMINISTRATIVE CODE.

   THE FIELD WORK WAS COMPLETED ON APRIL 22nd, 2025.
2. THE SURVEY WAS BASED ON THE PALM BEACH FARMS COMPANY PLAT NO. 2 LUCERNE TOWNSITE PALM BEACH COUNTY FLORIDA (P.B. 2, PG. 29).
3. BEARINGS ARE BASED ON N01°22'40"E (ASSUMED) ALONG THE EAST RIGHT–OF–WAY OF SOUTH H STREET.
4. THE LEGAL DESCRIPTION WAS PROVIDED BY CHICAGO TITLE INSURANCE COMPANY'S TITLE COMMITMENT NUMBER: 11884240, COMMITMENT DATE: 02/13/2026.
5. AREA = 87,750 SQUARE FEET (2.01 ACRES), MORE OR LESS.
6. EASEMENTS, RESTRICTIONS, AND OTHER ITEMS OF RECORD SHOWN ARE PER A TITLE COMMITMENT ISSUED BY CHICAGO TITLE INSURANCE COMPANY, COMMITMENT NUMBER: 11884240, COMMITMENT DATE: 02/13/2026.

   NO SEARCH OF THE PUBLIC RECORDS HAS BEEN PERFORMED BY BROWN & PHILLIPS, INC.

   THERE MAY BE ADDITIONAL EASEMENTS AND/OR RESTRICTIONS NOT SHOWN ON THIS SURVEY THAT MAY BE FOUND IN THE PUBLIC RECORDS OF PALM BEACH COUNTY.
7. ALL DISTANCES ARE MEASURED UNLESS NOTED OTHERWISE.

   ALL FIELD–MEASURED DIMENSIONS ALONG THE BOUNDARY WERE IN SIGNIFICANT AGREEMENT WITH THE PLAT, DEED, AND/OR CALCULATED VALUES.
8. ALL FIELD–MEASURED CONTROL MEASUREMENTS EXCEEDED AN ACCURACY OF 1:7,500.
9. THE EXPECTED HORIZONTAL AND VERTICAL PRECISION OF ITEMS SHOWN ON THIS SURVEY ARE AS FOLLOWS:
   1) BOUNDARY LINES – 0.10'
   2) TOPOGRAPHIC FEATURES – 0.20'
   3) ELEVATIONS ON CONSTRUCTED HARD SURFACES (PAVEMENT, CONCRETE, ETC.) – 0.05'
   4) ELEVATIONS ON NATURAL SURFACES (GROUND, DIRT, ETC.) – 0.10'
10. THE CURRENT USE OF THE SUBJECT PROPERTY IS RESIDENTIAL HOUSING.
11. THE CONTRACTED PURPOSE OF THIS SURVEY IS FOR REDEVELOPMENT.

    THIS SURVEY IS NOT VALID FOR ANY OTHER USE.
12. ADDITIONS OR DELETIONS TO SURVEY MAPS OR REPORTS BY OTHER THAN THE SIGNING PARTY OR PARTIES IS PROHIBITED WITHOUT WRITTEN CONSENT OF THE SIGNING PARTY OR PARTIES.
13. THIS SURVEY WAS PREPARED FOR THE PARTIES LISTED BELOW AND IS NOT ASSIGNABLE:
    –PINNACLE ON SIXITH, LLC
    –SHUTTS & BOWEN LLP
    –CHICAGO TITLE INSURANCE COMPANY
14. THE STORM AND SEWER AS–BUILT INFORMATION SHOWN HEREON WAS DERIVED BY FIELD MEASUREMENT OF EXISTING FEATURES USING ACCEPTED SURVEYING TECHNIQUES. HOWEVER, THE AS–BUILT INFORMATION SHOWN WAS TAKEN UNDER VARYING FIELD CONDITIONS SUCH AS ENVIRONMENTAL FACTORS, ACCESSIBILITY, DEPTH, ETC., AND MAY HAVE ACCURACY LIMITATIONS DUE TO THOSE FACTORS.
15. THIS MAP IS INTENDED TO BE DISPLAYED AT A SCALE OF 1"=30', ON A 24"x 36" SHEET.
16. SOME TOPOGRAPHIC FEATURES MAY BE EXAGGERATED IN SCALE FOR CLARITY. THE CENTER OF THE SYMBOL OF SUCH FEATURES IS THE CORRECT LOCATION.
17. NO UNDERGROUND INSTALLATIONS OR IMPROVEMENTS HAVE BEEN LOCATED AS PART OF THIS SURVEY.
18. ELEVATIONS SHOWN HEREON ARE IN NORTH AMERICAN VERTICAL DATUM OF 1988, AND ARE REFERENCED TO FDOT BENCHMARK B01, ELEVATION=21.52.
19. x10.0 DENOTES SPOT ELEVATION, REFERENCED TO NORTH AMERICAN VERTICAL DATUM OF 1988.
20. FLOOD ZONE INFORMATION OBTAINED FROM PALM BEACH COUNTY WEBSITE: "http://maps.co.palm–beach.fl.us/cwgis/?app=floodzones"; CURRENT FLOOD ZONE: X
21. © COPYRIGHT 2026 BY BROWN & PHILLIPS, INC. REPRODUCTIONS OF THIS SURVEY ARE NOT VALID WITHOUT THE ORIGINAL SIGNATURE AND STAMP, OR A DIGITALLY VERIFIED ELECTRONIC SIGNATURE AND SEAL, OF A FLORIDA LICENSED SURVEYOR AND MAPPER EMPLOYED BY BROWN & PHILLIPS, INC.

LEGAL DESCRIPTION

PARCEL 1

LOTS 10, 11, 12, 13, 14, 15, AND 16, BLOCK 203, PALM BEACH FARMS CO. PLAT NO. 2, TOWNSITE OF LUCERNE (N/K/A LAKE WORTH), ACCORDING TO THE MAP OR PLAT THEREOF AS RECORDED IN PLAT BOOK 2, PAGE 29, PUBLIC RECORDS OF PALM BEACH COUNTY, FLORIDA.

PARCEL 2

LOTS 1, 2 AND 3, BLOCK 205, PALM BEACH FARMS CO. PLAT NO. 2, TOWNSITE OF LUCERNE (N/K/A LAKE WORTH), ACCORDING TO THE MAP OR PLAT THEREOF AS RECORDED IN PLAT BOOK 2, PAGE 29, PUBLIC RECORDS OF PALM BEACH COUNTY, FLORIDA.

PARCEL 3

LOT 8, BLOCK 223, PALM BEACH FARMS CO. PLAT NO. 2, TOWNSITE OF LUCERNE (N/K/A LAKE WORTH), ACCORDING TO THE MAP OR PLAT THEREOF AS RECORDED IN PLAT BOOK 2, PAGE 29, PUBLIC RECORDS OF PALM BEACH COUNTY, FLORIDA.

PARCEL 4

LOTS 4 AND 5, BLOCK 205, PALM BEACH FARMS CO. PLAT NO. 2, TOWNSITE OF LUCERNE (N/K/A LAKE WORTH), ACCORDING TO THE MAP OR PLAT THEREOF AS RECORDED IN PLAT BOOK 2, PAGE 29, PUBLIC RECORDS OF PALM BEACH COUNTY, FLORIDA.

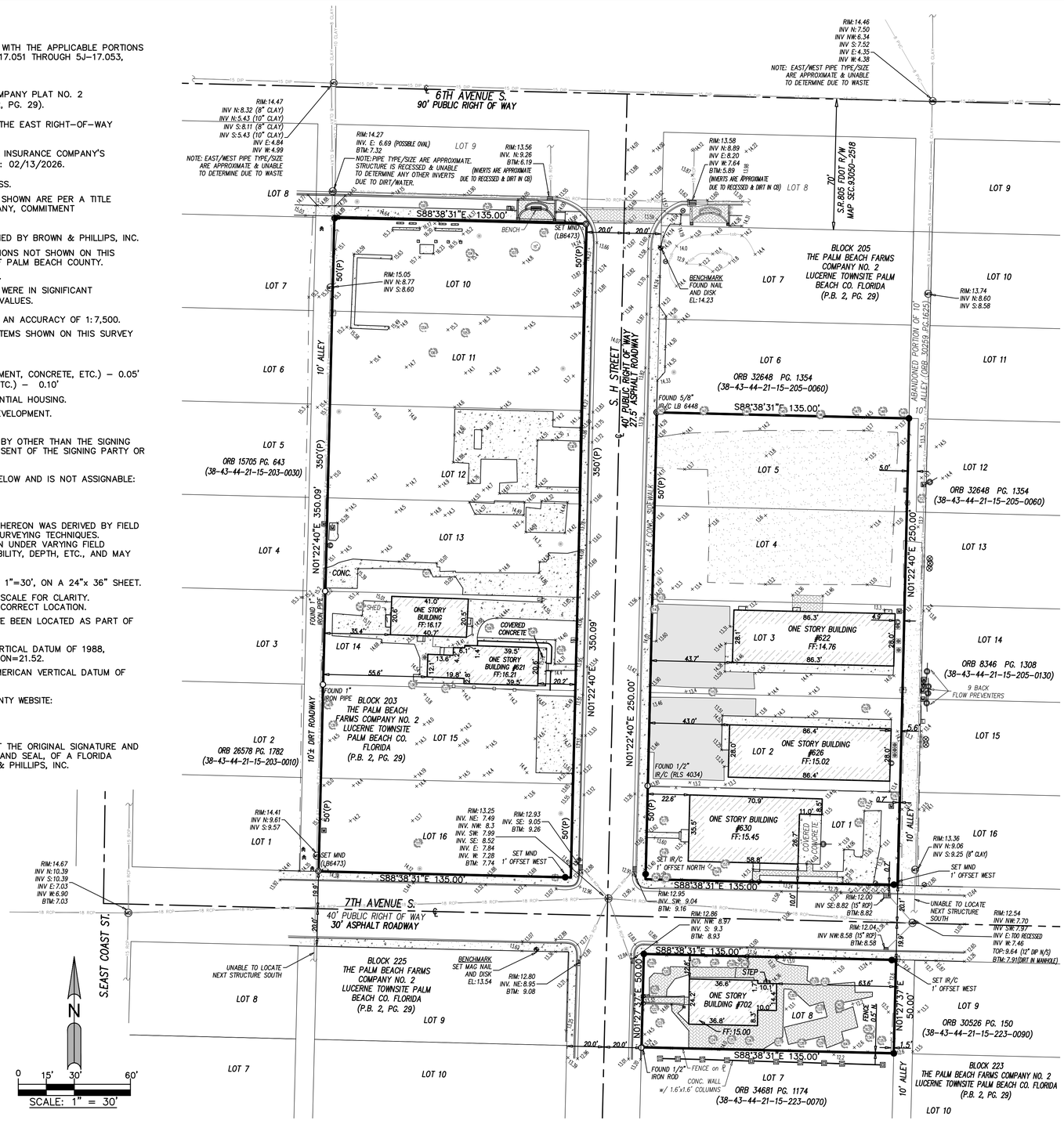

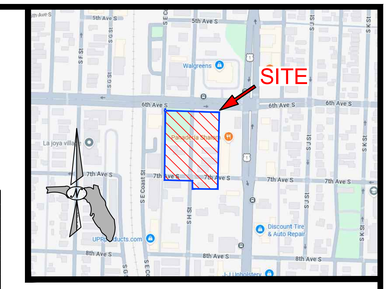

VICINITY MAP
NOT TO SCALE

TAG #	SPECIES	DBH	CTH
100	LIVE OAK	10	
101	LIVE OAK	12	
102	QUEEN PALM	10	26
103	WHITE BIRD OF PARADISE	8	
104	TRIANGLE PALM	12	12
105	STRANGLER FIG	98	
106	SABAL PALM	17	13
107	MANGO	22	
108	QUEEN PALM	8	11
109	QUEEN PALM	7	10
110	JAVA PLUM	23	
111	SABAL PALM	15	15
112	SABAL PALM	13	14
113	SABAL PALM	14	8
114	SABAL PALM	17	15
115	COCONUT PALM	9	24
116	SABAL PALM	17	13
117	MAHOGANY	23	
118	MAHOGANY	23	
119	MANGO	14	
120	TRIANGLE PALM	15	11
121	PINK TABEBUIA	10	
122	PINK TABEBUIA	4	
123	TRIANGLE PALM	12	8
124	FOX TAIL PALM	10	12
125	FOX TAIL PALM	10	13
126	FOX TAIL PALM	9	12
127	COCONUT PALM	9	21
128	COCONUT PALM	11	26
129	COCONUT PALM	10	25
130	COCONUT PALM	9	25
131	FOX TAIL PALM	9	14
132	ORANGE GEIGER TREE	5	
133	COCONUT PALM	8	23
134	MANGO	6	
135	WILD TAMARIND	9	
135 a	CARROT WOOD	26	
136	SABAL PALM	13	18
137	SABAL PALM	19	12
138	WOMANS TONGUE	33	
139	PARADISE TREE	9	
140	CARROT WOOD	28	
141	WILD TAMARIND	10	
142	GREEN BUTTONWOOD	6	
143	LIVE OAK	5	
144	GREEN BUTTONWOOD	6	
145	GREEN BUTTONWOOD	7	
146	LIVE OAK	5	
147	CRAPE MYRTLE	6	
148	CRAPE MYRTLE	6	
149	CRAPE MYRTLE	6	
150	COCONUT PALM	9	25
151	MAHOGANY	25	
152	AVOCADO	13	
153	SABAL PALM	16	7
154	MANGO	3	
155	TROPICAL ALMOND	7	
156	SABAL PALM	16	7
157	CHRISTMAS PALM	5	12
158	TRIPLE CHRISTMAS PALM	12	11
159	CHRISTMAS PALM	5	12
160	COCONUT PALM	10	21
161	TRIPLE CHRISTMAS PALM	11	16
162	ROYAL POINCIANA	7	
163	STARFRUIT TREE	7	
164	MANGO	6	

ABBREVIATIONS:
P.B. – PLAT BOOK
ORB – OFFICIAL RECORD BOOK
D.B. – DEED BOOK
PG. – PAGE
R/W – RIGHT–OF–WAY
℄ – CENTERLINE
U.E. – UTILITY EASEMENT
D.E. – DRAINAGE EASEMENT
(P) – PLAT DIMENSION
(D) – DEED DIMENSION
(M) – MEASURED DIMENSION
U/G – UNDERGROUND
IR – IRON ROD
IR/C – IRON ROD WITH CAP AS NOTED
IP – IRON PIPE
C.M. – 4"X4" CONCRETE MONUMENT
N/D – NAIL & DISK
NTT – NAIL & TIN TAB
NAD – NORTH AMERICAN DATUM
LB – LICENSED BUSINESS
WM – WATER MAIN
EL – ELEVATION
INV – INVERT
BTM – BOTTOM
DIP – DUCTILE IRON PIPE
CMP – CORRUGATED METAL PIPE
RCP – REINFORCED CONCRETE PIPE
HDPE – HIGH DENSITY POLYETHYLENE PIPE
DBH – DIAMETER AT BREAST HEIGHT
IP – IRON PIPE
C.M. – 4"x4" CONCRETE MONUMENT
N/D – NAIL & DISK
NTT – NAIL & TIN TAB
PK – PARKER KALON NAIL
PRM – PERMANENT REFERENCE MONUMENT
NAD – NORTH AMERICAN DATUM
LB – LICENSED BUSINESS
WM – WATER MAIN
TOW – TOP OF WALL
D. – ELEVATION
INV – INVERT
BTM – BOTTOM
DIP – DUCTILE IRON PIPE
PVC – POLYVINYL CHLORIDE PIPE
CMP – CORRUGATED METAL PIPE
RCP – REINFORCED CONCRETE PIPE
HDPE – HIGH DENSITY POLYETHYLENE PIPE

LEGEND

BENCHMARK		GUY ANCHOR		PALM TREE (X=DBH in INCHES)	
A/C UNIT		MAILBOX		TREE designated by OTHERS (X=TAG #)	
BACKFLOW PREVENTER		METAL LIGHT POLE		UNKNOWN TREE (X=DBH in INCHES)	
BOLLARD		PROPANE TANK		CURB	
CATCH BASIN		SANITARY MANHOLE		FENCE–CHAINLINK	
CLEANOUT		SIGN		FENCE–METAL	
CONCRETE POWER POLE		TRANSFORMER		FENCE–WOOD	
CONCRETE WALL		WATER METER		ASPHALT	
DRAINAGE MANHOLE		WATER VALVE		BRICK	
ELECTRIC BOX		WOOD LIGHT POLE		CONCRETE	
FIRE HYDRANT		WOOD POWER POLE		DIRT	
GATE POST		BANYAN TREE (X=DBH in INCHES)			
GUY ANCHOR		OAK TREE (X=DBH in INCHES)			

BROWN & PHILLIPS, INC.
PROFESSIONAL SURVEYING SERVICES
CERTIFICATE OF AUTHORIZATION # LB 6473
1860 OLD OKEECHOBEE ROAD, SUITE 509, WEST PALM BEACH, FLORIDA 33409 561–615–3988

DATE	REVISIONS	#
3/27/26	ADDED TITLE COMMITMENT–FC	1
4/22/26	REVISED LEGAL DESCRIPTION	2
6/09/26	ADDED ADDITIONAL TOPO AND TREE DATA – AB	3

SKETCH OF BOUNDARY SURVEY

SOUTH H STREET
LAKE WORTH, FL 33460

DRAWN: D.P.S.
CHECKED: JEP
F.B. LAKE WORTH #4
PAGES: 20–28

PROJ. # 26–022
SCALE: 1"=30'
DATE: MAR. 2026
SHEET 1 of 1

JOHN E. PHILLIPS III
PROFESSIONAL LAND SURVEYOR
STATE OF FLORIDA No. 4826
DATE: _____