The information contained herein is the property of Johnson, Levinson, Ragan, Davila, Inc. (JLRD) and is protected by copyright. Unauthorized use is prohibited. JLRD makes no warranty or guarantee as to the accuracy or completeness of the information contained herein, use without full verification is at the users sole risk. The user hereby indemnifies JLRD of all claims and losses resulting from any use, and such use shall be construed as unequivocal acceptance of the above conditions.

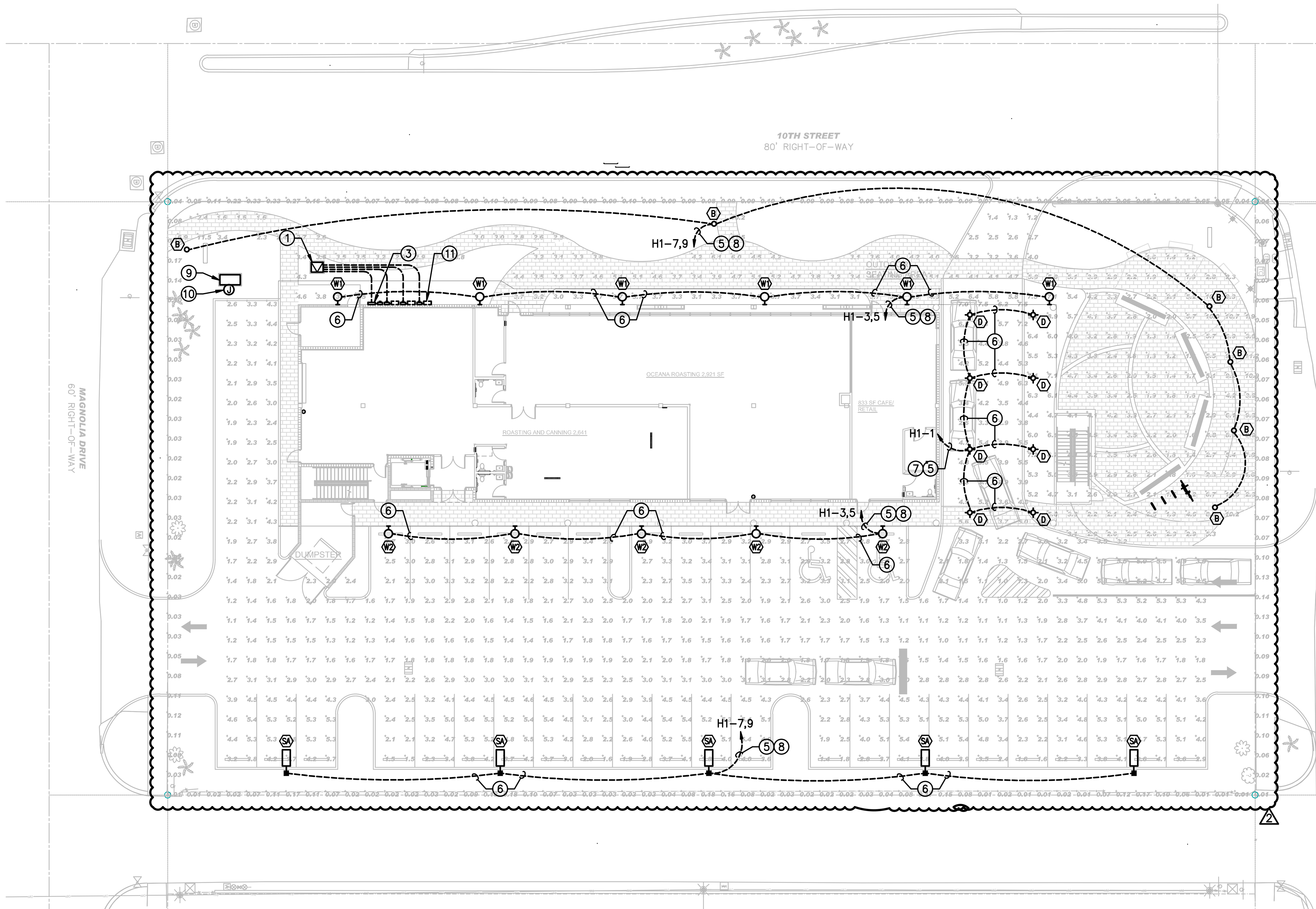

1 E–3 ELECTRICAL SITE PLAN

SCALE: 1" = 20'–0"

Luminaire Schedule: OCEANA COFFEE - SITE

Symbol	Qty	Label	Arrangement	Manufacturer	Catalog Number	Mounting	LLF	Luminaire Lumens	Luminaire Watts	Arrangement Watts
	6	B	Single	Cree Lighting	PWY-EDG-5M-P4-02-E-UL-XX-350	BOLLARD LIGHT	0.900	1947	21.9	21.9
	8	D	Single	Rayon Lighting	RBC4-LS1-CTS-UNV-H-W-FN-C	RECESSED MOUNT A.F.F.	0.900	1225	15.9	15.9
	5	SA	Single	LSI Industries	MRS-LED-09L-SIL-FT-40-70CRI-IL, Single Head	POLE MOUNT A.F.G.	0.900	6038	63	63
	6	W1	Single	Cree Lighting	XSPW-B-XX-2ME-4L-40K-UL	WALL MOUNT A.F.F. (bottom of fixture)	0.900	4270	31	31
	5	W2	Single	Cree Lighting	XSPW-B-XX-4ME-4L-40K-UL	WALL MOUNT A.F.F. (bottom of fixture)	0.900	4270	31	31

Calculation Summary: OCEANA COFFEE - SITE

Label	Calc Type	Units	Avg	Max	Min	Avg/Min	Max/Min
Outdoor Seating Area	Illuminance	Fc	4.02	11.5	1.2	3.35	9.58
Parking Lot and Drive Lane	Illuminance	Fc	3.07	7.5	1.0	3.07	7.50
Spill	Illuminance	Fc	0.07	0.33	0.01	7.00	33.00

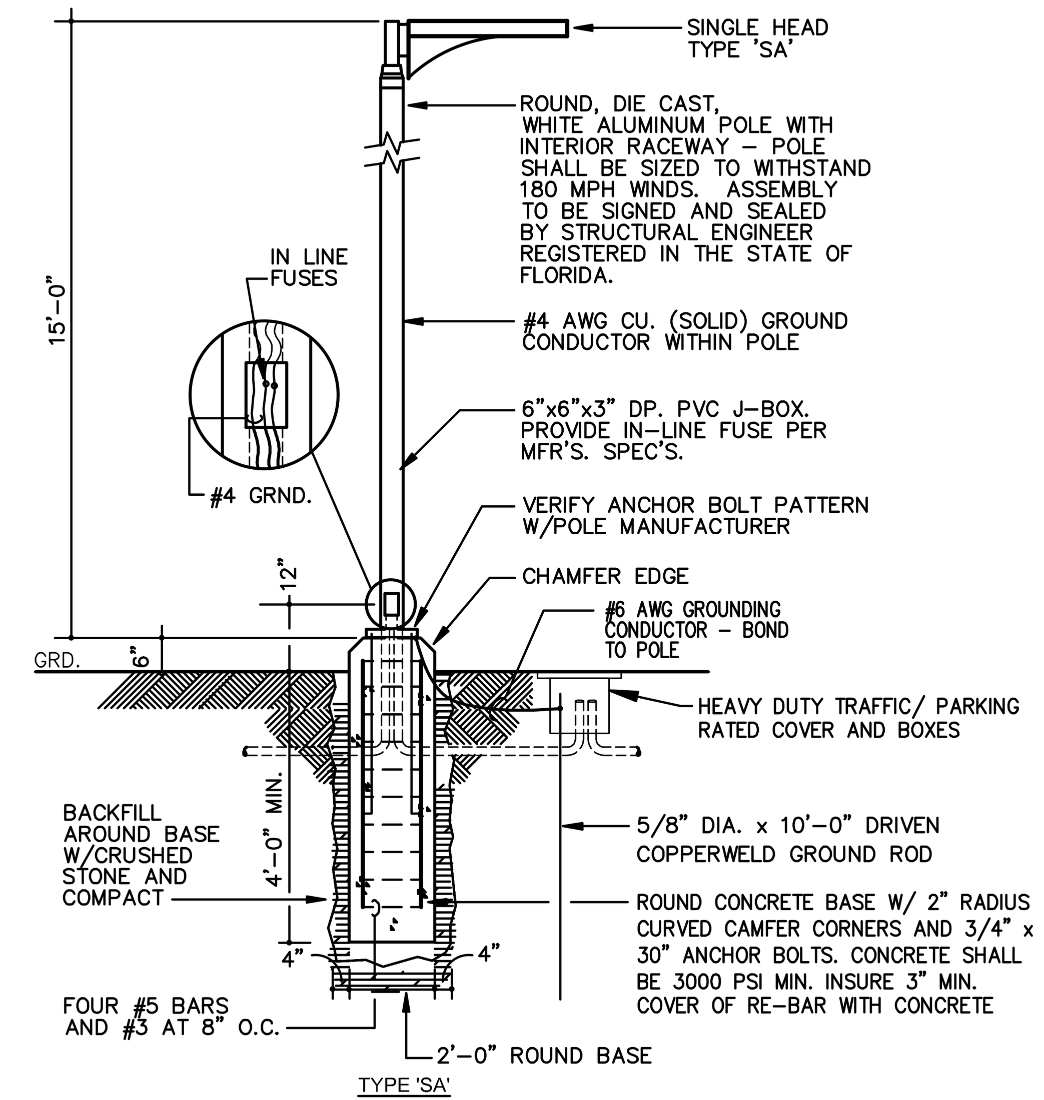

2 E–3 TYPICAL POLE LIGHT MOUNTING DETAIL

SCALE: NONE

NOTE: PROVIDE FIXTURE SHEILDS TO BLOCK LAMP FROM NORMAL RANGE OF VISION FOR RESIDENTIAL AREAS.

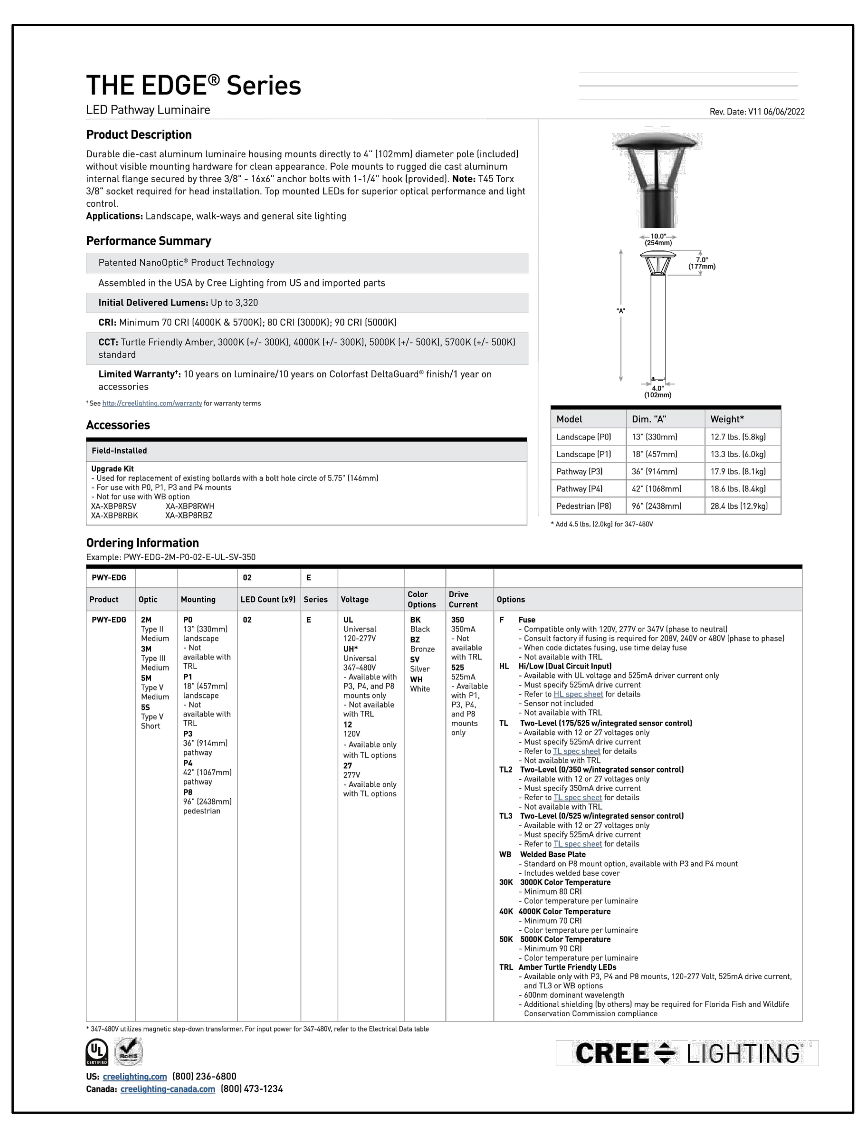

THE EDGE® Series
LED Pathway Luminaire
Rev. Date: V11 06/06/2022

Product Description
Durable die-cast aluminum luminaire housing mounts directly to 4" (102mm) diameter pole (included) without visible mounting hardware for clean appearance. Pole mounts to rugged die cast aluminum internal flange secured by three 3/8" - 16x6" anchor bolts with 1-1/4" hook (provided). Note: T45 Torx 3/8" socket required for head installation. Top mounted LEDs for superior optical performance and light control.
Applications: Landscape, walk-ways and general site lighting

Performance Summary
Patented NanoOptic® Product Technology
Assembled in the USA by Cree Lighting from US and imported parts
Initial Delivered Lumens: Up to 3,320
CRI: Minimum 70 CRI (4000K & 5700K); 80 CRI (3000K); 90 CRI (5000K)
CCT: Turtle Friendly Amber, 3000K (+/- 300K), 4000K (+/- 300K), 5000K (+/- 500K), 5700K (+/- 500K) standard
Limited Warranty[1]: 10 years on luminaire/10 years on Colorfast DeltaGuard® finish/1 year on accessories
[1] See http://creelighting.com/warranty for warranty terms

Accessories
Field-Installed
Upgrade Kit
- Used for replacement of existing bollards with a bolt hole circle of 5.75" (146mm)
- For use with P0, P1, P3 and P4 mounts
- Not for use with WB option
XA-XBP8RSV XA-XBP8RWH
XA-XBP8RBK XA-XBP8RBZ

Model	Dim. "A"	Weight*
Landscape (P0)	13" (330mm)	12.7 lbs. (5.8kg)
Landscape (P1)	18" (457mm)	13.3 lbs. (6.0kg)
Pathway (P3)	36" (914mm)	17.9 lbs. (8.1kg)
Pathway (P4)	42" (1068mm)	18.6 lbs. (8.4kg)
Pedestrian (P8)	96" (2438mm)	28.4 lbs (12.9kg)

* Add 4.5 lbs. (2.0kg) for 347-480V

Ordering Information
Example: PWY-EDG-2M-P0-02-E-UL-SV-350

* 347-480V utilizes magnetic step-down transformer. For input power for 347-480V, refer to the Electrical Data table

CREE LIGHTING
US: creelighting.com (800) 236-6800
Canada: creelighting-canada.com (800) 473-1234

FIXTURE TYPE 'B'

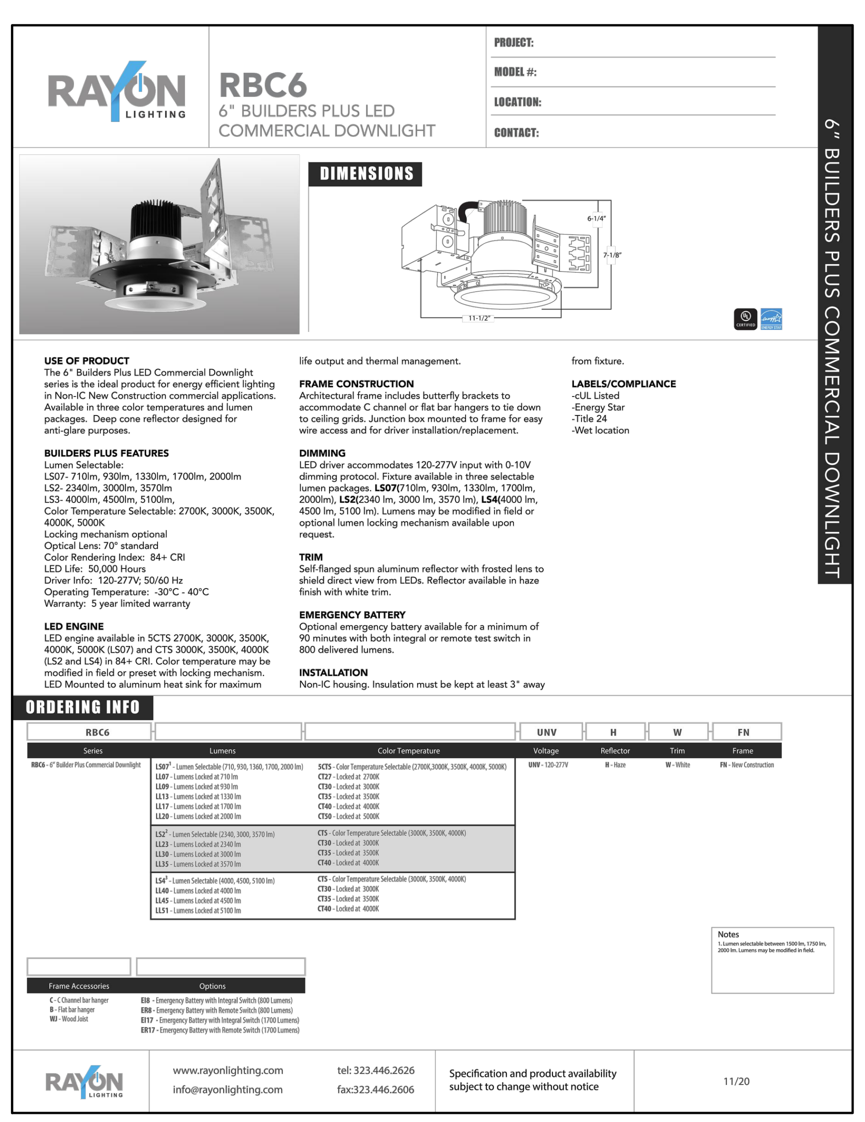

RAYON LIGHTING
RBC6
6" BUILDERS PLUS LED COMMERCIAL DOWNLIGHT
PROJECT:
MODEL #:
LOCATION:
CONTACT:
DIMENSIONS
6" BUILDERS PLUS COMMERCIAL DOWNLIGHT

USE OF PRODUCT
The 6" Builders Plus LED Commercial Downlight series is the ideal product for energy efficient lighting in Non-IC New Construction commercial applications. Available in three color temperatures and lumen packages. Deep cone reflector designed for anti-glare purposes.

BUILDERS PLUS FEATURES
Lumen Selectable:
LS07- 710lm, 930lm, 1330lm, 1700lm, 2000lm
LS2- 2340lm, 3000lm, 3570lm
LS3- 4000lm, 4500lm, 5100lm,
Color Temperature Selectable: 2700K, 3000K, 3500K, 4000K, 5000K
Locking mechanism optional
Optical Lens: 70° standard
Color Rendering Index: 84+ CRI
LED Life: 50,000 Hours
Driver Info: 120-277V; 50/60 Hz
Operating Temperature: -30°C - 40°C
Warranty: 5 year limited warranty

LED ENGINE
LED engine available in 5CTS 2700K, 3000K, 3500K, 4000K, 5000K (LS07) and CTS 3000K, 3500K, 4000K (LS2 and LS4) in 84+ CRI. Color temperature may be modified in field or preset with locking mechanism. LED Mounted to aluminum heat sink for maximum life output and thermal management.

FRAME CONSTRUCTION
Architectural frame includes butterfly brackets to accommodate C channel or flat bar hangers to tie down to ceiling grids. Junction box mounted to frame for easy wire access and for driver installation/replacement.

DIMMING
LED driver accommodates 120-277V input with 0-10V dimming protocol. Fixture available in three selectable lumen packages. LS07(710lm, 930lm, 1330lm, 1700lm, 2000lm), LS2(2340 lm, 3000 lm, 3570 lm), LS4(4000 lm, 4500 lm, 5100 lm). Lumens may be modified in field or optional lumen locking mechanism available upon request.

TRIM
Self-flanged spun aluminum reflector with frosted lens to shield direct view from LEDs. Reflector available in haze finish with white trim.

EMERGENCY BATTERY
Optional emergency battery available for a minimum of 90 minutes with both integral or remote test switch in 800 delivered lumens.

INSTALLATION
Non-IC housing. Insulation must be kept at least 3" away from fixture.

LABELS/COMPLIANCE
-cUL Listed
-Energy Star
-Title 24
-Wet location

ORDERING INFO
RBC6 | UNV | H | W | FN

www.rayonlighting.com
info@rayonlighting.com
tel: 323.446.2626
fax:323.446.2606
Specification and product availability subject to change without notice
11/20

FIXTURE TYPE 'D'

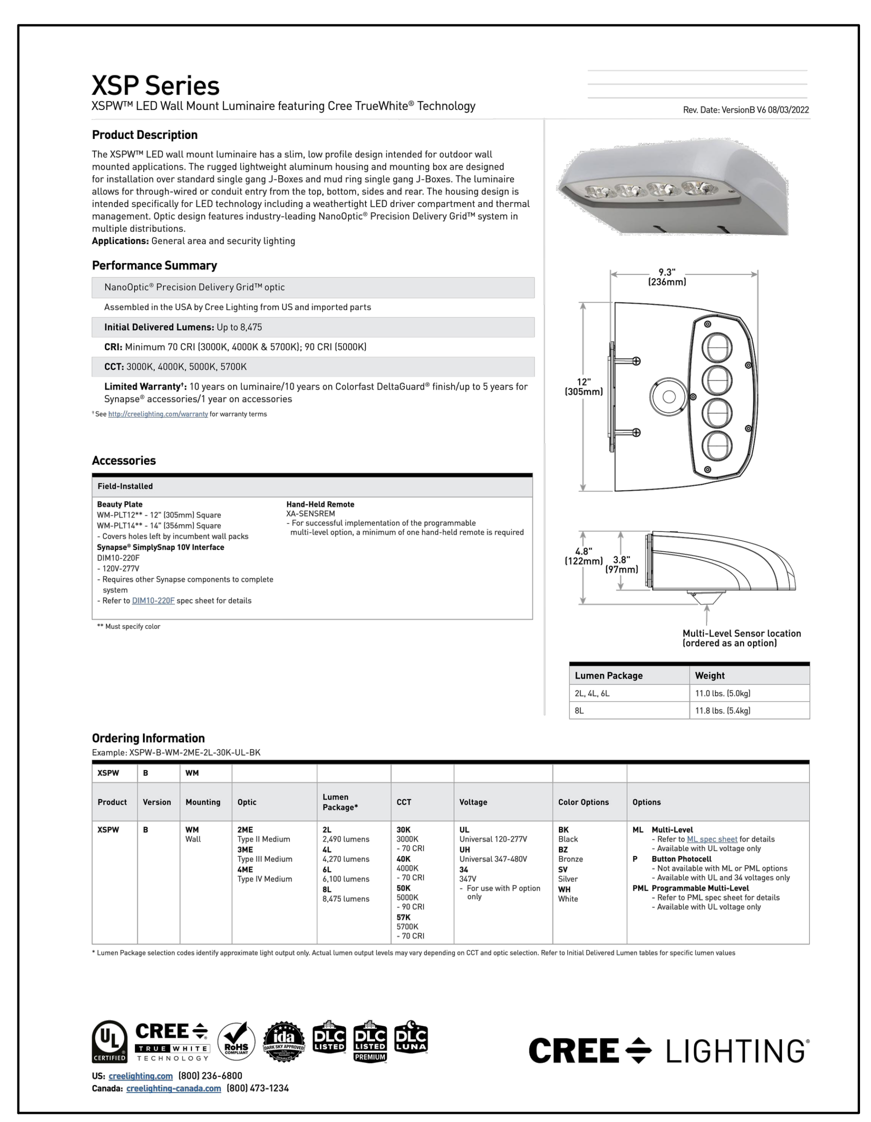

XSP Series
XSPW™ LED Wall Mount Luminaire featuring Cree TrueWhite® Technology
Rev. Date: VersionB V6 08/03/2022

Product Description
The XSPW™ LED wall mount luminaire has a slim, low profile design intended for outdoor wall mounted applications. The rugged lightweight aluminum housing and mounting box are designed for installation over standard single gang J-Boxes and mud ring single gang J-Boxes. The luminaire allows for through-wired or conduit entry from the top, bottom, sides and rear. The housing design is intended specifically for LED technology including a weathertight LED driver compartment and thermal management. Optic design features industry-leading NanoOptic® Precision Delivery Grid™ system in multiple distributions.
Applications: General area and security lighting

Performance Summary
NanoOptic® Precision Delivery Grid™ optic
Assembled in the USA by Cree Lighting from US and imported parts
Initial Delivered Lumens: Up to 8,475
CRI: Minimum 70 CRI (3000K, 4000K & 5700K); 90 CRI (5000K)
CCT: 3000K, 4000K, 5000K, 5700K
Limited Warranty[1]: 10 years on luminaire/10 years on Colorfast DeltaGuard® finish/up to 5 years for Synapse® accessories/1 year on accessories

Lumen Package	Weight
2L, 4L, 6L	11.0 lbs. (5.0kg)
8L	11.8 lbs. (5.4kg)

Ordering Information
Example: XSPW-B-WM-2ME-2L-30K-UL-BK

CREE LIGHTING
US: creelighting.com (800) 236-6800
Canada: creelighting-canada.com (800) 473-1234

FIXTURE TYPES 'W1','W2'

LSI
Catalog #:
Project:
Prepared By:
Date:

Mirada Small Area (MRS)
Outdoor LED Area Light
IP66 IK08

OVERVIEW	
Lumen Package	6,000 - 24,000
Wattage Range	41 - 196
Efficacy Range (LPW)	112 - 156
Fixture Weight lbs (kg)	20 (9.1)

QUICK LINKS
Ordering Guide | Performance | Photometrics | Dimensions

FEATURES & SPECIFICATIONS

Construction
- Rugged die-cast aluminum housing contains factory prewired driver and optical unit. Cast aluminum wiring access door located underneath.
- Fixtures are finished with LSI's DuraGrip® polyester powder coat finishing process. The DuraGrip finish withstands extreme weather changes without cracking or peeling. Other standard LSI finishes available. Consult factory.
- Shipping weight: 27 lbs in carton.

Optical System
- State-of-the-Art one piece silicone optic sheet delivers industry leading optical control with an integrated gasket to provide IP66 rated seal.
- Proprietary silicone refractor optics provide exceptional coverage and uniformity in distribution types 2, 3, 5W, and FT.
- Silicone optical material does not yellow or crack with age and provides a typical light transmittance of 93%.
- Zero uplight.
- Available in 5000K, 4000K, and 3000K color temperatures per ANSI C78.377
- Minimum CRI of 70.
- Integral louver (IL) and integral half louver (IH) options available for enhanced backlight control.

Electrical
- High-performance driver features over-voltage, under-voltage, short-circuit and over temperature protection.
- 0-10V dimming (10% - 100%) standard.
- Standard Universal Voltage (120-277 VAC) Input 50/60 Hz or optional High Voltage (347-480 VAC).
- L70 Calculated Life: >60k Hours
- Total harmonic distortion: <20%
- Operating temperature: -40°C to +50°C (-40°F to +122°F).
- Power factor: >.90
- Input power stays constant over life.
- Field replaceable 10kV surge protection device meets a minimum Category C Low operation (per ANSI/IEEE C62.41.2).
- High-efficacy LEDs mounted to metal-core circuit board to maximize heat dissipation
- Driver is fully encased in potting material for moisture resistance and complies with FCC standards. Driver and key electronic components can easily be accessed.

Controls
- Optional integral passive infrared Bluetooth™ motion and photocell sensor. Fixtures operate independently and can be commissioned via iOS or Android configuration app.
- LSI's AirLink™ wireless control system options reduce energy and maintenance costs while optimizing light quality 24/7.

Installation
- Designed to mount to square or round poles.
- A single fastener secures the hinged door, underneath the housing and provides quick & easy access to the electrical compartment.
- Included terminal block accepts up to 12 ga. wire.
- Utilizes LSI's traditional B3 drill pattern.

Warranty
- LSI luminaires carry a 5-year limited warranty. Refer to https://www.lsicorp.com/resources/terms-conditions-warranty/ for more information.

Listings
- Listed to UL 1598 and UL 8750.
- Meets Buy American Act requirements.
- IDA compliant; with 3000K color temperature selection.
- Title 24 Compliant; see local ordinance for qualification information.
- Suitable for wet locations.
- IP66 rated Luminaire per IEC 60598-1.
- 3G rated for ANSI C136.31 high vibration applications are qualified.
- IK08 rated luminaire per IEC 66262 mechanical impact code
- DesignLights Consortium® (DLC) qualified product. Not all versions of this product may be DLC qualified. Please check the DLC Qualified Products List at www.designlights.org/QPL to confirm which versions are qualified.

LSI Industries Inc. 10000 Alliance Rd. Cincinnati, OH 45242 • (513) 372-3200 • www.lsicorp.com
Page 1/7 Rev. 02/21/23 SPEC.1046.B.1122

FIXTURE TYPE 'SA'

SITE COORDINATION NOTES

THE CONTRACTOR IS DIRECTED TO COORDINATE ROUTING OF ALL UNDERGROUND CONDUITS WITH THE CIVIL DRAWINGS AND TO VERIFY ACTUAL LOCATIONS AND ELEVATIONS OF ALL UNDERGROUND UTILITIES PRIOR TO ROUGH–IN.

LIGHTING NOTES

PALM BEACH COUNTY ZONING CODE HAS THE FOLLOWING REQUIREMENTS:

1. LIGHT FIXTURES WITH DROP LENS ARE PROHIBITED.
2. LIGHT FIXTURES THAT CREATE GLARE OBSERVABLE WITHIN THE NORMAL RANGE OF VISION ONTO A STREET ARE PROHIBITED.
3. UPWARD LIGHTS (GLOWING INTO SKY) ARE PROHIBITED.
4. SPILLOVER LIGHT FROM EXTERIOR LIGHTING FIXTURES (PARKING AND SPORTS LIGHTING) ONTO RESIDENTIAL PARCEL OR RIGHT–OF–WAY SHALL NOT EXCEED THEREE–TENTHS (0.33) OF ONE FOOTCANDLE WHEN MEASURED AT SIX (6) FEET ABOVE GRADE AT THE RESIDENTIAL PROPERTY.
5. SHIELDS ARE REQUIRED TO CONTROL THE GLARE. PROJECT ENGINEER TO VERIFY ALL REQUIREMENTS.

PLAN NOTES

1. PROPOSED LOCATION OF FPL PAD–MOUNTED TRANSFORMER.
2. NEW U.G. SECONDARY SERVICE ENTRANCE CONDUCTORS IN CONDUIT BY CONTRACTOR, FROM TRANSFORMER THRU METER INTO SERVICE ENTRANCE PANEL – SEE ONE–LINE DIAGRAM.
3. CT CABINET WITH FPL METER, CONTRACTOR SHALL VERIFY EXACT LOCATION.
4. ELECTRICAL ROOM 213.
5. 2#8, 1#8G – 1"C.
6. 2#10, 1#10G – 3/4"C.
7. OPERATE DUSK TO MID–NIGHT.
8. OPERATE DUSK TO DAWN.
9. PROVIDE AND INSTALL NEW 22kW GENERATOR IN A WEATHERPROOF ENCLOSURE WITH LEVEL II SOUND ATTENUATION, DUAL FUEL NATURAL GAS/LP SUPPLY – 120/208V, 3PH, 4W RATED XXA.
10. MOUNT WEATHERPROOF J–BOX TO GENERATOR AS REQUIRED FOR GENERATOR HEATER(S) AND BATTERY CHARGER. PROVIDE CONDUIT AND CONDUCTORS AS REQUIRED AND CONNECT TO LIFE SAFETY BRANCH PANEL CKTS. XXXXXX WITH 2#12, 1#12G – 3/4"C.
11. FUTURE AUTOMATIC TRANSFER SWITCH (ATS), TYPICAL FOR 3. FIELD COORDINATE EXACT LOCATION.

ONE A architecture
2100 CORPORATE DR
BOYNTON BEACH, FL 33426
AA-26003520

JASON A. STINCHCOMB LICENSE No. 58184 STATE OF FLORIDA PROFESSIONAL ENGINEER

This item has been electronically signed and sealed by Jason A. Stinchcomb P.E. 58184 on 4/10/2023 using a SHA-1 authentication code. Printed copies of this document are not considered signed and sealed and the SHA-1 authentication code must be verified on any electronic copies.

CONSULTANTS :

JLRD
JOHNSON, LEVINSON RAGAN, DAVILA, INC.
CONSULTING ENGINEERS
1450 Centrepark Boulevard, Suite 350
West Palm Beach, Florida 33401
(561) 689-2303 • (561) 689-2302 Fax
www.jlrdinc.com
JLRD Project Number – 121133
Jason A. Stinchcomb, P.E. #58184
Jason D. Barber, P.E #73050

PROJECT NAME:

LAKE PARK KITCHENS AKA OCEANA COFFEE
1301 10th. STREET
LAKE PARK, FL 33403

REVISIONS:
2 3-27-2023 – Permit Comments

DATE 08/24/2022

DRAWN : REVIEW

SCALE AS SHOWN

DRAWING TITLE:

ELECTRICAL SITE PLAN

SHEET No:

E-3