The information contained herein is the property of Johnson, Levinson, Ragan, Davila, Inc. (JLRD) and is protected by copyright. Unauthorized use is prohibited. JLRD makes no warranty or guarantee as to the accuracy or completeness of the information contained herein, and without full application to all the facts and circumstances pertinent to each case, may not be suitable for other purposes or in other locations. The seal/s affixed hereto are valid only when used in full and not alone. Reproduction of the information contained herein, without full application to all the facts and circumstances pertinent to each case, is prohibited without the express written consent of JLRD Engineers.

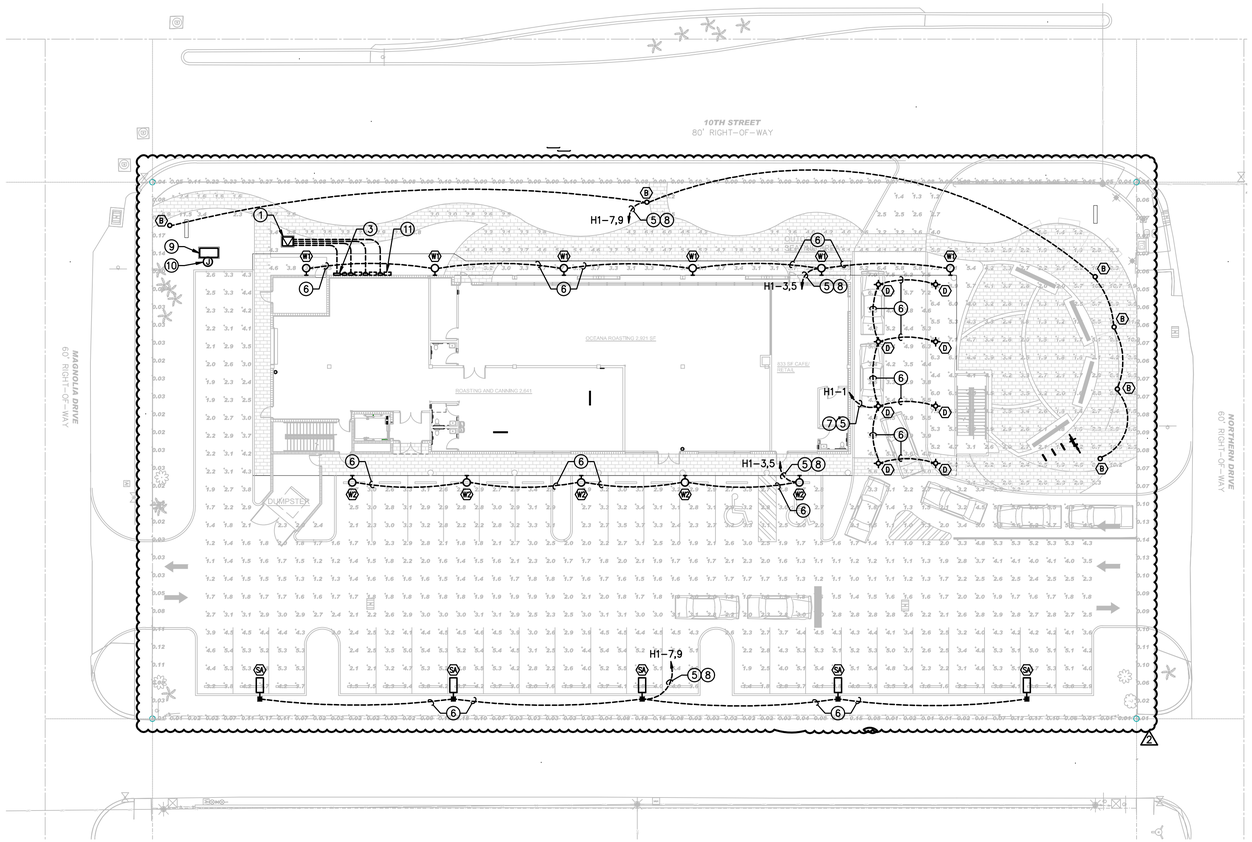


1 E-3 ELECTRICAL SITE PLAN

SCALE: 1" = 20'-0"

NORTH

## Luminaire Schedule: OCEANA COFFEE - SITE

| Symbol | Qty | Label | Arrangement | Manufacturer | Catalog Number | Mounting | LLF | Luminaire Lumens | Luminaire Watts | Arrangement Watts |
|---|---|---|---|---|---|---|---|---|---|---|
| | 6 | B | Single | Cree Lighting | PWY-EDG-5M-P4-02-E-UL-XX-350 | BOLLARD LIGHT | 0.900 | 1947 | 21.9 | 21.9 |
| | 8 | D | Single | Rayon Lighting | RBC4-LS1-CTS-UNV-H-W-FN-C | RECESSED MOUNT A.F.F. | 0.900 | 1225 | 15.9 | 15.9 |
| | 5 | SA | Single | LSI Industries | MRS-LED-09L-SBL-FT-40-70CRI-L, Single Head | POLE MOUNT A.F.G. | 0.900 | 6038 | 63 | 63 |
| | 6 | W1 | Single | Cree Lighting | XSPW-B-XX-2ME-4L-40K-UL | WALL MOUNT A.F.F. (bottom of fixture) | 0.900 | 4270 | 31 | 31 |
| | 5 | W2 | Single | Cree Lighting | XSPW-B-XX-4ME-4L-40K-UL | WALL MOUNT A.F.F. (bottom of fixture) | 0.900 | 4270 | 31 | 31 |

## Calculation Summary: OCEANA COFFEE - SITE

| Label | Calc Type | Units | Avg | Max | Min | Avg/Min | Max/Min |
|---|---|---|---|---|---|---|---|
| Outdoor Seating Area | Illuminance | Fc | 4.02 | 11.5 | 1.2 | 3.35 | 9.58 |
| Parking Lot and Drive Lane | Illuminance | Fc | 3.07 | 7.5 | 1.0 | 3.07 | 7.50 |
| Spill | Illuminance | Fc | 0.07 | 0.33 | 0.01 | 7.00 | 33.00 |

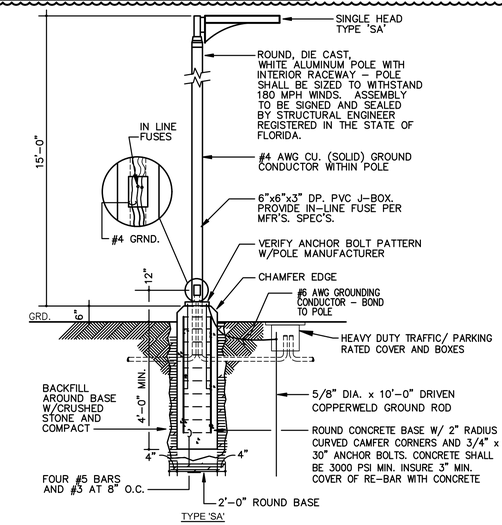


2 E-3 TYPICAL POLE LIGHT MOUNTING DETAIL

SCALE: NONE

NOTE: PROVIDE FIXTURE SHEILDS TO BLOCK LAMP FROM NORMAL RANGE OF VISION FOR RESIDENTIAL AREAS.

## THE EDGE® Series

LED Pathway Luminaire

Rev. Date: V11.16/06/2022

**Product Description**

Durable die-cast aluminum contoure housing mounts directly to 4" (102mm) diameter pole (included). Stainless steel mounting hardware for easy aiming/levelling. Pole mounts to rugged die cast aluminum internal flange secured by three 3/8" - 16x4" anchor bolts with 1-1/8" hook (provided). **Note:** Tab Torx 3/8" socket required for head installation. Top mounted LEDs for superior optical performance and light control.

**Applications:** Landscape, walk-ways and general site lighting

**Performance Summary**

- Patented NanoOptic® Product Technology
- Assembled in the USA by Cree Lighting from US and imported parts

**Initial Delivered Lumens:** Up to 3,320

**CRI:** Minimum 75 CRI (4000K & 5700K), 80 CRI (3000K), 90 CRI (3000K)

**CCT:** Turtle Friendly Amber, 3000K (+/- 300K), 4000K (+/- 300K), 5000K (+/- 500K), 5700K (+/- 500K) standard

**Limited Warranty†:** 10 years on luminaire/10 years on Colortest DetaSure® finish/1 year on accessories

†See http://cleelighting.com/terms/ for warranty terms

**Accessories**

**Field-Installed**

**Upgrade Kit**
- Field replacement of existing bollards with a bolt hole circle of 5.75" (146mm)
- For use with PE, PT, PS and PN mounts
- Available only with the following:
  - SA-KIPR9RH
  - SA-KIPR9RHK
  - SA-KIPR9RSZ

**Ordering Information**

Example: PWY-EDG-2M-P3-D2-E-UL-SV-350

| PWY-EDG | | | 02 | E | | | | |
|---|---|---|---|---|---|---|---|---|
| Product | Optic | Mounting | LED Count/Left | Series | Voltage | Color Options | Drive Current | Options |
| PWY-EDG | 2M Type 2 Medium 3M Type 3 Medium 4M Type 4 Medium 5M Type 5 Medium 2W Type 2 Wide 3W Type 3 Wide 4W Type 4 Wide 5W Type 5 Wide | P3 12" (305mm) pathway P4 16" (406mm) pathway P5 20" (508mm) pathway PT 14"(356mm) landscape PS 24" (610mm) pathway PN 24" (610mm) pedestrian | 02 | E | UL Universal Voltage 120-277V **UNIV** Universal 347-480V **347** 347-480V **120** 120V **208** 208V **240** 240V **277** 277V - Available only with PS, PT, PN mounts only **480** 480V - Available only with PS, PT, PN mounts only | BK Black **BZ** Bronze **SV** Silver **WH** White | 350 350mA **525** 525mA - Available only with PT, PS, PN mounts only | F Fuse - Compatible only with 120V, 277V or 347V (phase to neutral) - Fuse holder is rated for 13A max. Use fuse rated for 120V or 277V - Refer to Fuse sheet for details **HL HCLow Cloud Circuit Input** - Compatible with NanoOptic® Cloud LED Driver current only - Must specify 525mA drive current - Refer to HL spec sheet for details **TL Two-Level (7/3 Watts)** - Not available with TRL **TL2 Two-Level (7/7W/525 mA/integral sensor control)** - Available with 12 or 37 voltages only - Must specify 525mA drive current - Refer to TL spec sheet for details **TL3 Two-Level (5/3W/350 mA/integral sensor control)** - Available with 12 or 37 voltages only - Must specify 350mA drive current - Refer to TL spec sheet for details **WB Wildlife Backlight** - Standard on PE mount option, available with PS and PN mount - Includes vented base cover **30K Color temperature per luminaire** - Minimum 70 CRI **40K Color temperature per luminaire** - Minimum 70 CRI **50K Color temperature per luminaire** - Minimum 70 CRI **TRL Turtle Friendly Amber** - Available only with PS, PN and PE mounts, 120-277 Volt, 525mA drive current, with CLO or WB options - Not recommended for overhangs - Additional shielding (by others) may be required for Florida Fish and Wildlife Conservation Commission compliance |

† For LEDW outdoor integrally-step down transformer. For input power for 347-480V, refer to the Electrical Data table

UL cleelighting.com (800) 236-4688
Canada cleelighting.canada.com (800) 473-1234

CREE LIGHTING

FIXTURE TYPE 'B'

## RBC6

6" BUILDERS PLUS LED COMMERCIAL DOWNLIGHT

RAYON LIGHTING

PROJECT:
MODEL #:
LOCATION:
CONTACT:

DIMENSIONS

6" BUILDERS PLUS COMMERCIAL DOWNLIGHT

**USE OF PRODUCT**
The 6" Builders Plus LED Commercial Downlight series is the ideal product for energy efficient lighting in Non-IC New Construction commercial applications. Available in three color temperatures and lumen packages. Deep cone reflector designed for anti-glare purposes.

**BUILDERS PLUS FEATURES**
Lumen Packages Available:
LS07: 710lm, 930lm, 1330lm, 1700lm, 2000lm
LS2: 2340lm, 3000lm, 3570lm
LS3: 4000lm, 4500lm, 5100lm,
Color Temperature Selectable: 2700K, 3000K, 3500K, 4000K, 5000K
Locking mechanism optional
Optical Lens: 70° standard
Color Rendering Index: 84 CRI
LED Life: 50,000 hours
Driver Info: 120-277V, 50/60 Hz
Operating Temperature: -30°C - 40°C
Warranty: 5 year limited warranty

**LED ENGINE**
LED engine available in 5CTS 2700K, 3000K, 3500K, 4000K, 5000K (LS07) and CTS 3000K, 3500K, 4000K (LS2 and LS3) in 84+ CRI. Color temperature may be selected in the field using a rotary switch (optional). LED Mounted to aluminum heat sink for maximum life output and thermal management.

**FRAME CONSTRUCTION**
Architectural frame includes butterfly brackets to accommodate 1/2" EMT conduit hangers for drop down to ceiling grids. Junction box mounted to frame for easy wire access and for driver installation/replacement.

**DIMMING**
Driver can accommodate 120-277V input with 0-10V dimming protocol. Fixture available in three selectable lumen packages. **LS07**(710lm, 930lm, 1330lm, 1700lm, 2000lm), **LS2**(2340 lm, 3000 lm, 3570 lm), **LS3**(4000 lm, 4500 lm, 5100 lm). Lumens may be modified in field or factory. Lumen locking mechanism available upon request.

**TRIM**
Self-flanged spun aluminum reflector with frosted lens to shield direct view from LEDs. Reflector available in haze finish with white trim.

**EMERGENCY BATTERY**
Optional emergency battery available for a minimum of 90 minutes with both integral or remote test switch in 800 delivered lumens.

**INSTALLATION**
Non-IC housing. Insulation must be kept at least 3" away from fixture.

**LABELS/COMPLIANCE**
cULus Listed
Title 24 JA8 compliant
IWaL location

**ORDERING INFO**

| RBC6 | | | | UNV | W | FN |
|---|---|---|---|---|---|---|
| Series | Color Temperature | Voltage | Reflector | Dim | Frame | |
| RBC6 6" Builders Plus Commercial Downlight | 2007 - Lumen Selectable (710, 930, 1330, 1700, 2000 lm) | 120 - Lumen Selectable (120V) | **BCD** - Clear Textured Lumen (710lM, 930lM, 1330lM, 1700lM, 2000lM) | **UNV** - 120-277V | **W** - White | **FN** - Flat Flange |
| | 2007 - Lumen Selectable (2340, 3000, 3570 lm) | 277 - Lumen Selectable (277V) | **BCD** - Clear Textured Lumen (2340lM, 3000lM, 3570lM) | | | |
| | 5007 - Lumen Selectable (4000, 4500, 5100 lm) | | **CTD** - Lumen Selectable 2700K | | | |
| | 5127 - Lumen Locked at 1330 lm | | **CTD** - Lumen Locked at 3000K | | | |
| | 5167 - Lumen Locked at 1700 lm | | **CTD** - Lumen Locked at 3500K | | | |
| | 5207 - Lumen Locked at 2000 lm | | **CTD** - Lumen Locked at 4000K | | | |
| | 5287 - Lumen Locked at 2340 lm | | **CTD** - Lumen Locked at 5000K | | | |
| | 5357 - Lumen Locked at 3000 lm | | **CTD** - Lumen Selectable (2700K, 3000K, 3500K, 4000K, 5000K) | | | |
| | 5407 - Lumen Locked at 3570 lm | | **CTD** - Lumen Selectable (3000K, 3500K, 4000K) | | | |
| | 5507 - Lumen Locked at 4000 lm | | **CTD** - Lumen Locked at 3000K | | | |
| | 5547 - Lumen Locked at 4500 lm | | **CTD** - Lumen Locked at 3500K | | | |
| | 5587 - Lumen Locked at 5100 lm | | **CTD** - Lumen Locked at 4000K | | | |

Notes
- Lumen Locked Lumen between 710lm, 1330lm, 2340 lm Lumen Locked Lumen Not Available for LS07

Fixture Accessories
- F1 Clamshell Flange
- W Yellow Lenses
- WL Visual Limit

Fixture Accessories
- BB - Emergency Battery with Integral Switch (800 Lumens)
- BRH - Emergency Battery with Remote Switch (800 Lumens)
- BBTF - Emergency Battery with Integral Switch (1700 Lumens)
- BRTF - Emergency Battery with Remote Switch (1700 Lumens)

RAYON LIGHTING
www.rayonlighting.com
info@rayonlighting.com
tel: 323.446.2626
fax: 323.446.2606
Specification and product availability subject to change without notice
11/20

FIXTURE TYPE 'D'

## XSP Series

XSPW™ LED Wall Mount Luminaire featuring Cree TrueWhite® Technology

Rev. Date: Version2-16 05/03/2022

**Product Description**

The XSPW™ LED wall-mount luminaire has a slim, low profile design intended for outdoor wall mounting applications. The rugged lightweight aluminum housing and mounting box are designed for installation over standard single gang J-Boxes and mud ring single gang J-Boxes. The luminaire allows for through-wired or conduit entry from the top, bottom, sides and rear. The housing design is intended specifically for LED technology including a weathertight LED driver compartment and thermal management. Optic design features industry-leading NanoOptic® Precision Delivery Grid™ system in multiple distributions.

**Applications:** General area and security lighting

**Performance Summary**

- NanoOptic® Precision Delivery Grid™ optic
- Assembled in the USA by Cree Lighting from US and imported parts

**Initial Delivered Lumens:** Up to 6,275

**CRI:** Minimum 70 CRI (3000K, 4000K & 5700K), 90 CRI (3000K)

**CCT:** 3000K, 4000K, 5000K, 5700K

**Limited Warranty†:** 10 years on luminaire/10 years on Colortest DetaSure® finish/up to 5 years for Synapse® accessories/1 year on accessories

†See http://cleelighting.com/terms/ for warranty terms

**Accessories**

**Field-Installed**

**Beacon Plate**
- WM-PLT12** - 12" (305mm) Square
- WM-PLT18** - 18" (457mm) Square
- Covers holes left by incumbent wall packs

**Synapse® SimpleSnap 10V Interface**
- SNAP-PCIE
- SNAP-DTM
- Requires other Synapse components to complete system
- Refer to SNAP-DTM spec sheet for details

**Hand-Held Remote**
- SA-SCHO5RH
- For use in initial implementation of the programmable multi-level options, a minimum of one hand-held remote is required

**Ordering Information**

Example: XSPW-B-WM-2ME-3L-30K-UL-BK

| XSPW | B | WM |
|---|---|---|
| Product | Version | Mounting |
| XSPW | B | **WM** Wall; **ONE** Type 1 Medium; **2ME** Type 2 Medium; **4ME** Type 4 Medium |

| Optic | Lumen Package* | CCT | Voltage | Color Options | Options |
|---|---|---|---|---|---|
| **2L** 2,340 lumens **3L** 3,570 lumens **4L** 4,100 lumens **5L** 6,475 lumens | **30K** 3000K **40K** 4000K **50K** 5000K **57K** 5700K **27K** 2700K - Not available with 5L or 7ML options | **UL** Universal 120-277V **347** Universal 347-480V **36** 36 Volt - For use with P option only | **BK** Black **BZ** Bronze **BR** Brown **WH** White | **ML Multi-Level** - Refer to ML spec sheet for details - Available with 5L voltage only **P Button Photocell** - Not available with 5L or 7ML options - Available with 3L, 4L voltage only **PML Programmable Multi-Level** - Refer to PML spec sheet for details - Available with 5L voltage only |

* 2 Lumen Package selection codes identify approximate light output. Actual lumen output levels may vary depending on CCT and optic selection. Refer to initial Delivered Lumen tables for specific lumen values

CREE LIGHTING

FIXTURE TYPES 'W1','W2'

## Mirada Small Area (MRS)

Outdoor LED Area Light

IP66 IK08

| OVERVIEW | |
|---|---|
| Lumen Package | 6,000 - 24,000 |
| Wattage Range | 41 - 196 |
| Efficacy Range (LPW) | 112 - 136 |
| Fixture Weight lbs (kg) | 20 (9) |

QUICK LINKS
Ordering Guide | Performance | Photometrics | Dimensions

**FEATURES & SPECIFICATIONS**

**Construction**
- Rugged die-cast aluminum housing contains factory pre-wired driver and optical cover. Aluminum wiring access door located underneath.
- Fixtures are finished with LSI's DuraGrip® polyester powder coat finishing process. Meets 5000 hours salt spray and extreme weather changes without cracking or peeling. Other standard & custom finishes available. Consult factory.
- Shipping weight: 27 lbs in carton.

**Optical System**
- State-of-the-Art one piece silicone optic sheet delivers industry leading optical control with an integrated gasket to provide IP66 rated seal.
- Proprietary silicone refractor optics provide exceptional coverage and uniformity in distribution types 2, 3, 5W, and FT.
- Silicone optical material does not yellow or crack with age and provides a typical light transmittance of 93%.
- Zero uplight.
- Available in 5000K, 4000K, and 3000K color temperatures per ANSI C78.377
- Minimum CRI of 70.
- Integral louver (IL) and integral half louver (IH) options available for enhanced backlight control.

**Electrical**
- High-performance driver features over-voltage, under-voltage, short-circuit and over temperature protection.
- 0-10V dimming (10% - 100%) standard.
- Standard Universal Voltage (120-277 VAC) Input 50/60 Hz or optional High Voltage (347-480 VAC).
- L70 Calculated Life: >60k Hours
- Total harmonic distortion: <20%
- Operating temperature: -40°C to +50°C (-40°F to +122°F).
- Power factor: > 90
- Input power stays constant over life.
- Field replaceable 10kV surge protection device meets a minimum Category C Low operation (per ANSI/IEEE C62.41.2).
- High-efficacy LEDs mounted to metal-core circuit board to maximize heat dissipation
- Driver is fully potted in potting material for moisture resistance and complies with FCC standards. Driver and key electronic components can easily be accessed.

**Controls**
- Optional integral passive infrared Bluetooth™ motion and photocell sensor. Fixtures operate independently and can be commissioned via iOS or Android configuration app.
- LSI's AirLink™ wireless control system options reduce energy and maintenance costs while optimizing light quality 24/7.

**Installation**
- Designed to mount to square or round poles.
- A single fastener secures the hinged door, underneath the housing and provides quick & easy access to the electrical compartment.
- Included terminal block accepts up to 12 ga. wire.
- Utilizes LSI's traditional 83 drill pattern.

**Warranty**
- LSI luminaires carry a 5-year limited warranty. Refer to https://www.lsicorp.com/resources/terms-conditions-warranty/ for more information.

**Listings**
- Listed to UL 1598 and UL 8750.
- Meets Buy American Act requirements.
- ISA compliant, with 3000K color temperature selection.
- Title 24 Compliant; see local ordinances for qualification information.
- Suitable for wet locations.
- IP66 rated Luminaire per IEC 60598-1.
- 3G rated for ANSI C136.31 high vibration applications are qualified.
- IK08 rated luminaire per IEC 62262 mechanical impact code
- DesignLights Consortium® (DLC) qualified product. Not all versions of this product may be DLC qualified. Please check the DLC Qualified Products List at www.designlights.org/QPL to confirm which versions are qualified.
- 5. SHIELDS ARE REQUIRED TO CONTROL THE GLARE. PROJECT ENGINEER TO VERIFY ALL REQUIREMENTS.

LSI Industries Inc. 10000 Alliance Rd. Cincinnati, OH 45242 • (513) 372-3200 • www.lsicorp.com
©2019 Industries Inc. All Rights Reserved. Specifications and dimensions subject to minimum standard tolerances. Specifications subject to change without notice.

Page 1/7 Rev. 03/25/19
SPEC-3046.0.1322

FIXTURE TYPE 'SA'

## SITE COORDINATION NOTES

THE CONTRACTOR IS DIRECTED TO COORDINATE ROUTING OF ALL UNDERGROUND CONDUITS WITH THE CIVIL DRAWINGS AND TO VERIFY ACTUAL LOCATIONS AND ELEVATIONS OF ALL UNDERGROUND UTILITIES PRIOR TO ROUGH-IN.

## LIGHTING NOTES

PALM BEACH COUNTY ZONING CODE HAS THE FOLLOWING REQUIREMENTS:

1. LIGHT FIXTURES WITH DROP LENS ARE PROHIBITED.
2. LIGHT FIXTURES THAT CREATE GLARE OBSERVABLE WITHIN THE NORMAL RANGE OF VISION ONTO A STREET ARE PROHIBITED.
3. UPWARD LIGHTS (GLOWING INTO SKY) ARE PROHIBITED.
4. SPILLOVER LIGHT FROM EXTERIOR LIGHTING FIXTURES (PARKING AND SPORTS LIGHTING) ONTO RESIDENTIAL PARCEL OR RIGHT-OF-WAY SHALL NOT EXCEED THEREE-TENTHS (0.33) OF ONE FOOTCANDLE WHEN MEASURED AT SIX (6) FEET ABOVE GRADE AT THE RESIDENTIAL PROPERTY.
5. SHIELDS ARE REQUIRED TO CONTROL THE GLARE. PROJECT ENGINEER TO VERIFY ALL REQUIREMENTS.

## PLAN NOTES

1. PROPOSED LOCATION OF FPL PAD-MOUNTED TRANSFORMER.
2. NEW U.G. SECONDARY SERVICE ENTRANCE CONDUCTORS IN CONDUIT BY CONTRACTOR, FROM TRANSFORMER THRU METER INTO SERVICE ENTRANCE PANEL – SEE ONE-LINE DIAGRAM.
3. CT CABINET WITH FPL METER, CONTRACTOR SHALL VERIFY EXACT LOCATION.
4. ELECTRICAL ROOM 213.
5. 2#8, 1#8G – 1"C.
6. 2#10, 1#10G – 3/4"C.
7. OPERATE DUSK TO MID-NIGHT.
8. OPERATE DUSK TO DAWN.
9. PROVIDE AND INSTALL NEW 22kW GENERATOR IN A WEATHERPROOF ENCLOSURE WITH LEVEL II SOUND ATTENUATION, DUAL FUEL NATURAL GAS/LP SUPPLY – 120/208V, 3PH, 4W RATED XXA.
10. MOUNT WEATHERPROOF J-BOX TO GENERATOR AS REQUIRED FOR GENERATOR HEATER(S) AND BATTERY CHARGER. PROVIDE CONDUIT AND CONDUCTORS AS REQUIRED AND CONNECT TO LIFE SAFETY BRANCH PANEL CKTS. XXXXXX WITH 2#12, 1#12G – 3/4"C.
11. FUTURE AUTOMATIC TRANSFER SWITCH (ATS), TYPICAL FOR 3. FIELD COORDINATE EXACT LOCATION.

ONE A architecture
2100 CORPORATE DR
BOYNTON BEACH, FL 33426
AA-26003520

JASON A. STINCHCOMB LICENSE No. 56154 STATE OF FLORIDA PROFESSIONAL ENGINEER

This item has been electronically signed and sealed by Jason A. Stinchcomb P.E. 56184 on 4/10/2023 using a SHA-1 authentication code. Printed copies of this document are not considered signed and sealed and the SHA-1 authentication code must be verified on any electronic copies.

CONSULTANTS :

JOHNSON, LEVINSON RAGAN, DAVILA, INC.
CONSULTING ENGINEERS
1450 Centrepark Boulevard, Suite 350
West Palm Beach, Florida 33401
(561) 689-2303 • (561) 689-2302 Fax
www.jlrdinc.com
JLRD Project Number – 121133
Jason A. Stinchcomb, P.E. #56184
Jason D. Barber, P.E #73050

PROJECT NAME:

# LAKE PARK KITCHENS AKA OCEANA COFFEE
1301 10th. STREET
LAKE PARK, FL 33403

REVISIONS:
1 3-27-2023 – Permit Comments

DATE 08/24/2022
DRAWN : REVIEW
SCALE AS SHOWN
DRAWING TITLE:

**ELECTRICAL SITE PLAN**

SHEET No:

E-3