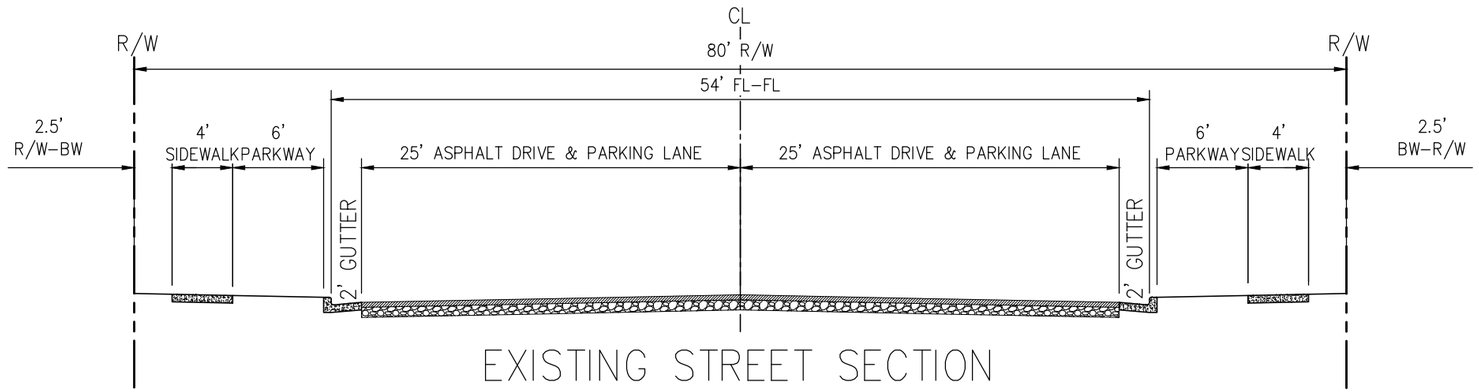

EXISTING STREET SECTION

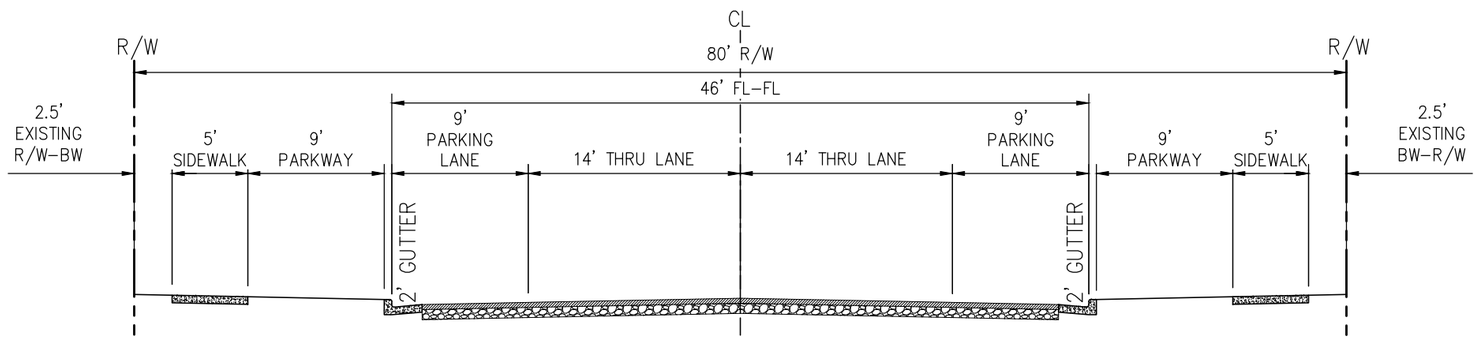

ALTERNATIVE 1

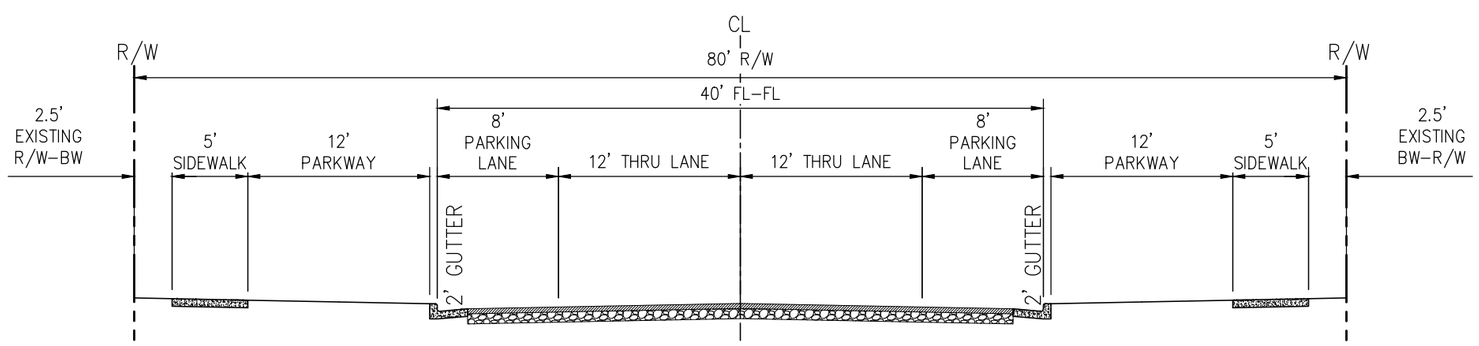

ALTERNATIVE 2

DRAWN: RM
DATE: 06/04/2021
CHECKED: BC
DATE: 06/04/2021
JOB NO: JT1004A

TAIT & ASSOCIATES
Since 1964
701 North Parkcenter Drive
Santa Ana, CA 92705
p: 714.560.8200
www.tait.com
ENGINEERING ENVIRONMENTAL BUILDING LAND
Orange County Sacramento Denver Dallas
San Luis Obispo Riverside Boise Atlanta

TYPICAL SECTIONS - EXISTING & ALTERNATIVES

CHARLOTTE STREET REHAB
TOWN OF JOHNSTOWN

Jun 04, 2021 - 2:15pm by rmcclellan K:\Drawings\JT\JT1000 - OLD TOWN\ENG\Conceptual Plans\Charlotte Street\Typical Sections\JT1004A_XS-Charlotte.dwg