CONSTRUCTION CONTRACT

Town of Jerome
Wastewater Treatment Plant Improvements
Fann Environmental, LLC

October 2026

Prepared For:

Town of Jerome
600 Clark Street
P.O. Box 335
Jerome, AZ 86331

Prepared By:

Pacific Advanced Civil Engineering, Inc.
8723 E Via de Commercio #A-204
Scottsdale, AZ 85258
(480) 991-3595

Index

Notice of Award (EJCDC C-510) ..... Pages 1 - 1

Agreement Between Owner & Contractor (EJCDC C-520) ..... Pages 1 – 7

Performance Bond (EJCDC C-610) ..... Pages 1 - 4

Payment Bond (EJCDC C-615) ..... Pages 1 - 4

Certification of Owner's Attorney & Agency Concurrence (RUS 1780-26, Ex A, Attach 1) ..... Pages 1 – 1

General Conditions (EJCDC C-700) ..... Pages 1 - 70

Supplementary Conditions (EJCDC C-800) ..... Pages 1 – 28

Notice to Proceed (EJCDC C-550) ..... Pages 1 – 1

RD Construction Sign ..... Pages 1 – 1

Application for Payment (C-620) ..... Pages 1 - 6

Work Change Directive (EJCDC C-940) ..... Pages 1 - 1

Change Order (EJCDC C-941) ..... Pages 1 - 1

Field Order (EJCDC C-942) ..... Pages 1 - 1

General Contractor's AIS Certification (RUS 1780-26, Ex A, Attach 4) ..... Pages 1 - 1

Manufacturer's AIS Certification (RUS 1780-26, Ex A, Attach 5) ..... Pages 1 - 1

Certificate of Substantial Completion (EJCDC C-625) ..... Pages 1 - 1

Notice of Acceptability (EJCDC C-626) ..... Pages 1 - 1

Technical Specifications

Engineering Plans

Bid Addenda #1 - #5

Contractor’s Bid

NOTICE OF AWARD

Date of Issuance:	October 22, 2026		
Owner:	Town of Jerome	Owner's Project No.:	N/A
Engineer:	PACE	Engineer's Project No.:	B614
Project:	Jerome Wastewater Treatment Plant Improvements		
Contract Name:	Jerome Wastewater Treatment Plant Improvements		
Bidder:	Fann Environmental, LLC		
Bidder's Address:	6708 Corsair Ave Ste A Prescott, AZ 86301		

You are notified that Owner has accepted your Bid dated **June 3, 2026** for the above Contract, and that you are the Successful Bidder and are awarded a Contract for:

The Town of Jerome Wastewater Treatment Plant Improvements.

The Contract Price of $10,699,947.60 and Contract are contingent upon USDA-RD concurrence. The Contract Price is subject to adjustment based on the provisions of the Contract, including but not limited to those governing changes, Unit Price Work, and Work performed on a cost-plus-fee basis, as applicable.

One (1) electronic, unexecuted counterparts of the Agreement accompany this Notice of Award, and one copy of the Contract Documents accompanies this Notice of Award, or has been transmitted or made available to Bidder electronically.

☒ Drawings will be delivered separately from the other Contract Documents.

You must comply with the following conditions precedent within 15 days of the date of receipt of this Notice of Award:

1. Deliver to Owner **One (1) hard copy and one (1) electronic,** counterparts of the Agreement, signed by Bidder (as Contractor).
2. Deliver with the signed Agreement(s) the Contract security (such as required performance and payment bonds) and insurance documentation, as specified in the Instructions to Bidders and in the General Conditions, Articles 2 and 6.
3. Other conditions precedent (if any): **None**

Failure to comply with these conditions within the time specified will entitle Owner to consider you in default, annul this Notice of Award, and declare your Bid security forfeited.

Within **30** days after you comply with the above conditions, Owner will return to you one fully signed counterpart of the Agreement, together with any additional copies of the Contract Documents as indicated in Paragraph 2.02 of the General Conditions.

Owner: **Town of Jerome**

By *(signature)*: Brett Klein

Name *(printed)*: Brett Klein

Title: Town Manager / Clerk

Copy: Engineer

EJCDC® C-510, Notice of Award.
Copyright© 2018 National Society of Professional Engineers, American Council of Engineering Companies, and American Society of Civil Engineers. All rights reserved.

AGREEMENT BETWEEN OWNER AND CONTRACTOR

This Agreement is by and between **Town of Jerome** ("Owner") and **Fann Environmental, LLC** ("Contractor").

Terms used in this Agreement have the meanings stated in the General Conditions and the Supplementary Conditions.

Owner and Contractor hereby agree as follows:

ARTICLE 1—WORK

1.01 Contractor shall complete all Work as specified or indicated in the Contract Documents. The Work is generally described as follows: Improvements include conversion of this existing trickling filter facility to a 90,000 GPD Sequencing Batch Reactors (SBR) with removal and demolition of existing wastewater equipment; construction of two new 54,000-gallon SBR basins, aerobic digester basin, equalization basin, sludge dewatering, chlorine contact chamber, drying beds, etc.; installation of new 12-inch PVC gravity sewer main, complete with piping and piping appurtenances; construction of a new access roadway, including all grading and drainage work.

ARTICLE 2—THE PROJECT

2.01 The Project, of which the Work under the Contract Documents is a part, is generally described as follows: **Jerome Wastewater Treatment Plant Improvements.**

ARTICLE 3—ENGINEER

3.01 The Owner has retained **Pacific Advanced Civil Engineering, Inc. (PACE)** ("Engineer") to act as Owner's representative, assume all duties and responsibilities of Engineer, and have the rights and authority assigned to Engineer in the Contract.

3.02 The part of the Project that pertains to the Work has been designed by **the Engineer.**

ARTICLE 4—CONTRACT TIMES

4.01 *Time is of the Essence*

A. All time limits for Milestones, if any, Substantial Completion, and completion and readiness for final payment as stated in the Contract Documents are of the essence of the Contract.

4.02 **[Deleted]**

4.03 *Contract Times: Days*

A. The Work will be substantially complete within **300** days after the date when the Contract Times commence to run as provided in Paragraph 4.01 of the General Conditions, and completed and ready for final payment in accordance with Paragraph 15.06 of the General Conditions within **330** days after the date when the Contract Times commence to run.

EJCDC® C-520, Agreement between Owner and Contractor for Construction Contract (Stipulated Price).
Copyright© 2018 National Society of Professional Engineers, American Council of Engineering Companies, and American Society of Civil Engineers. All rights reserved.

4.04 **[Deleted]**

4.05 *Liquidated Damages*

A. Contractor and Owner recognize that time is of the essence as stated in Paragraph 4.01 above and that Owner will suffer financial and other losses if the Work is not completed and Milestones not achieved within the Contract Times, as duly modified. The parties also recognize the delays, expense, and difficulties involved in proving, in a legal or arbitration proceeding, the actual loss suffered by Owner if the Work is not completed on time. Accordingly, instead of requiring any such proof, Owner and Contractor agree that as liquidated damages for delay (but not as a penalty):

1. *Substantial Completion:* Contractor shall pay Owner $**1,600.00** for each day that expires after the time (as duly adjusted pursuant to the Contract) specified above for Substantial Completion, until the Work is substantially complete. **Calculations assume continued RPR field services and associated expenses. It also includes Owner and Engineer project management and office engineering efforts to address unresolved construction issues resulting in extended services beyond the date of substantial completion as stipulated in the contract documents.**

2. *Completion of Remaining Work:* After Substantial Completion, if Contractor shall neglect, refuse, or fail to complete the remaining Work within the Contract Times (as duly adjusted pursuant to the Contract) for completion and readiness for final payment, Contractor shall pay Owner $**533.00** for each day that expires after such time until the Work is completed and ready for final payment. **Liquidated damages beyond the date of project Final Completion are calculated at approximately one-third of the amount for Substantial Completion.**

3. **[Deleted]**

4. Liquidated damages for failing to timely attain ~~Milestones,~~ Substantial Completion, and final completion are not additive, and will not be imposed concurrently.

B. If Owner recovers liquidated damages for a delay in completion by Contractor, then such liquidated damages are Owner's sole and exclusive remedy for such delay, and Owner is precluded from recovering any other damages, whether actual, direct, excess, or consequential, for such delay, except for special damages (if any) specified in this Agreement.

C. **[Deleted]**

4.06 ***[Deleted]***

ARTICLE 5—CONTRACT PRICE

5.01 Owner shall pay Contractor for completion of the Work in accordance with the Contract Documents, the amounts that follow, subject to adjustment under the Contract:

A. For all Work other than Unit Price Work, a lump sum of $10,699,947.60.

EJCDC® C-520, Agreement between Owner and Contractor for Construction Contract (Stipulated Price).
Copyright© 2018 National Society of Professional Engineers, American Council of Engineering Companies, and American Society of Civil Engineers. All rights reserved.

ARTICLE 6—PAYMENT PROCEDURES

6.01 *Submittal and Processing of Payments*

A. Contractor shall submit Applications for Payment in accordance with Article 15 of the General Conditions. Applications for Payment will be processed by Engineer as provided in the General Conditions.

6.02 *Progress Payments; Retainage*

A. Owner shall make progress payments on the basis of Contractor's Applications for Payment on or about the **5th** day of each month during performance of the Work as provided in Paragraph 6.02.A.1 below, provided that such Applications for Payment have been submitted in a timely manner and otherwise meet the requirements of the Contract. All such payments will be measured by the Schedule of Values established as provided in the General Conditions (and in the case of Unit Price Work based on the number of units completed) or, in the event there is no Schedule of Values, as provided elsewhere in the Contract.

1. Prior to Substantial Completion, progress payments will be made in an amount equal to the percentage indicated below but, in each case, less the aggregate of payments previously made and less such amounts as Owner may withhold, including but not limited to liquidated damages, in accordance with the Contract.

a. **95** percent of the value of the Work completed (with the balance being retainage).

1) **[Deleted]**

b. **95** percent of cost of materials and equipment not incorporated in the Work (with the balance being retainage).

B. Upon Substantial Completion **of the entire construction to be provided under the construction Contract Documents**, Owner shall pay an amount sufficient to increase total payments to Contractor to **100** percent of the Work completed, less such amounts set off by Owner pursuant to Paragraph 15.01.E of the General Conditions, and less **200** percent of Engineer's estimate of the value of Work to be completed or corrected as shown on the punch list of items to be completed or corrected prior to final payment.

6.03 *Final Payment*

A. Upon final completion and acceptance of the Work, Owner shall pay the remainder of the Contract Price in accordance with Paragraph 15.06 of the General Conditions.

6.04 *Consent of Surety*

A. Owner will not make final payment, or return or release retainage at Substantial Completion or any other time, unless Contractor submits written consent of the surety to such payment, return, or release.

6.05 *Interest*

A. All amounts not paid when due will bear interest at the rate of **1.5** percent per annum.

Copyright© 2018 National Society of Professional Engineers, American Council of Engineering Companies, and American Society of Civil Engineers. All rights reserved.

ARTICLE 7—CONTRACT DOCUMENTS

7.01 *Contents*

A. The Contract Documents consist of all of the following:

1. This Agreement.
2. Bonds:
    a. Performance bond (together with power of attorney).
    b. Payment bond (together with power of attorney).
3. General Conditions.
4. Supplementary Conditions.
5. **Technical** Specifications.
6. Drawings (not attached but incorporated by reference) consisting of **83** sheets with each sheet bearing the following general title: **Jerome Wastewater Treatment Plant.**
8. Addenda (numbers **1** to **5**, inclusive).
9. Exhibits to this Agreement (enumerated as follows):
    a. Contractor's Bid
    b. Certification of Owner's Attorney and Agency Concurrence
    c. Application for Payment
    d. Notice to Proceed.
    e. Work Change Directives.
    f. Change Orders.
    g. Field Orders.
    h. General (Prime) Contractor's Certification for AIS.
    i. Manufacturer's Certification for AIS.
    j. Certificate of Substantial Completion.
    k. Notice of Acceptability of Work.
10. The following which may be delivered or issued on or after the Effective Date of the Contract and are not attached hereto:
    a. Warranty Bond, if any.

B. The Contract Documents listed in Paragraph 7.01.A are attached to this Agreement (except as expressly noted otherwise above).

C. There are no Contract Documents other than those listed above in this Article 7.

D. The Contract Documents may only be amended, modified, or supplemented as provided in the Contract.

Copyright© 2018 National Society of Professional Engineers, American Council of Engineering Companies, and American Society of Civil Engineers. All rights reserved.

ARTICLE 8—REPRESENTATIONS, CERTIFICATIONS, AND STIPULATIONS

8.01 *Contractor's Representations*

A. In order to induce Owner to enter into this Contract, Contractor makes the following representations:

1. Contractor has examined and carefully studied the Contract Documents, including Addenda.

2. Contractor has visited the Site **(if required)**, conducted a thorough visual examination of the Site and adjacent areas, and become familiar with the general, local, and Site conditions that may affect cost, progress, and performance of the Work.

3. Contractor is familiar with all Laws and Regulations that may affect cost, progress, and performance of the Work.

4. Contractor has carefully studied the reports of explorations and tests of subsurface conditions at or adjacent to the Site and the drawings of physical conditions relating to existing surface or subsurface structures at the Site that have been identified in the Supplementary Conditions, with respect to the Technical Data in such reports and drawings.

5. Contractor has carefully studied the reports and drawings relating to Hazardous Environmental Conditions, if any, at or adjacent to the Site that have been identified in the Supplementary Conditions, with respect to Technical Data in such reports and drawings.

6. Contractor has considered the information known to Contractor itself; information commonly known to contractors doing business in the locality of the Site; information and observations obtained from visits to the Site; the Contract Documents; and the Technical Data identified in the Supplementary Conditions or by definition, with respect to the effect of such information, observations, and Technical Data on (a) the cost, progress, and performance of the Work; (b) the means, methods, techniques, sequences, and procedures of construction to be employed by Contractor; and (c) Contractor's safety precautions and programs.

7. Based on the information and observations referred to in the preceding paragraph, Contractor agrees that no further examinations, investigations, explorations, tests, studies, or data are necessary for the performance of the Work at the Contract Price, within the Contract Times, and in accordance with the other terms and conditions of the Contract.

8. Contractor is aware of the general nature of work to be performed by Owner and others at the Site that relates to the Work as indicated in the Contract Documents.

9. Contractor has given Engineer written notice of all conflicts, errors, ambiguities, or discrepancies that Contractor has discovered in the Contract Documents, and of discrepancies between Site conditions and the Contract Documents, and the written resolution thereof by Engineer is acceptable to Contractor.

10. The Contract Documents are generally sufficient to indicate and convey understanding of all terms and conditions for performance and furnishing of the Work.

Copyright© 2018 National Society of Professional Engineers, American Council of Engineering Companies, and American Society of Civil Engineers. All rights reserved.

11. Contractor's entry into this Contract constitutes an incontrovertible representation by Contractor that without exception all prices in the Agreement are premised upon performing and furnishing the Work required by the Contract Documents.

8.02 *Contractor's Certifications*

A. Contractor certifies that it has not engaged in corrupt, fraudulent, collusive, or coercive practices in competing for or in executing the Contract. For the purposes of this Paragraph 8.02:

1. "corrupt practice" means the offering, giving, receiving, or soliciting of anything of value likely to influence the action of a public official in the bidding process or in the Contract execution;

2. "fraudulent practice" means an intentional misrepresentation of facts made (a) to influence the bidding process or the execution of the Contract to the detriment of Owner, (b) to establish Bid or Contract prices at artificial non-competitive levels, or (c) to deprive Owner of the benefits of free and open competition;

3. "collusive practice" means a scheme or arrangement between two or more Bidders, with or without the knowledge of Owner, a purpose of which is to establish Bid prices at artificial, non-competitive levels; and

4. "coercive practice" means harming or threatening to harm, directly or indirectly, persons or their property to influence their participation in the bidding process or affect the execution of the Contract.

8.03 *Standard General Conditions*

A. Owner stipulates that if the General Conditions that are made a part of this Contract are EJCDC® C-700, Standard General Conditions for the Construction Contract (2018), published by the Engineers Joint Contract Documents Committee, and if Owner is the party that has furnished said General Conditions, then Owner has plainly shown all modifications to the standard wording of such published document to the Contractor, through a process such as highlighting or "track changes" (redline/strikeout), or in the Supplementary Conditions.

Copyright© 2018 National Society of Professional Engineers, American Council of Engineering Companies, and American Society of Civil Engineers. All rights reserved.

IN WITNESS WHEREOF, Owner and Contractor have signed this Agreement.

This Agreement will be effective on _____ (which is the Effective Date of the Contract).

Owner:	Contractor:
Town of Jerome	
(typed or printed name of organization)	*(typed or printed name of organization)*
By: _____	By: _____
(individual's signature)	*(individual's signature)*
Date: _____	Date: _____
(date signed)	*(date signed)*
Name: _____	Name: _____
(typed or printed)	*(typed or printed)*
Title: _____	Title: _____
(typed or printed)	*(typed or printed)*
	*(If **[Type of Entity]** is a corporation, a partnership, or a joint venture, attach evidence of authority to sign.)*
Attest: _____	Attest: _____
(individual's signature)	*(individual's signature)*
Title: _____	Title: _____
(typed or printed)	*(typed or printed)*
Address for giving notices:	Address for giving notices:
600 Clark Street	
P.O. Box 335	
Jerome, AZ 86331	
Designated Representative:	Designated Representative:
Name: _____	Name: _____
(typed or printed)	*(typed or printed)*
Title: _____	Title: _____
(typed or printed)	*(typed or printed)*
Address:	Address:
Phone: _____	Phone: _____
Email: _____	Email: _____
*(If **[Type of Entity]** is a corporation, attach evidence of authority to sign. If **[Type of Entity]** is a public body, attach evidence of authority to sign and resolution or other documents authorizing execution of this Agreement.)*	License No.: _____ *(where applicable)*
	State: _____

EJCDC® C-520, Agreement between Owner and Contractor for Construction Contract (Stipulated Price).
Copyright© 2018 National Society of Professional Engineers, American Council of Engineering Companies, and American Society of Civil Engineers. All rights reserved.

PERFORMANCE BOND

Contractor Name: **Fann Environmental, LLC** Address *(principal place of business)*: **6078 Corsair Ave Ste A** **Prescott, AZ 86301**	**Surety** Name: Address *(principal place of business)*:
Owner Name: **Town of Jerome** Mailing address *(principal place of business)*: **600 Clark Street, Jerome AZ, 86331**	**Contract** Description *(name and location)*: **Jerome Wastewater Treatment Plant Improvements, Sewer Plant Road, Jerome, AZ 86331** Contract Price: **$10,699,947.60** Effective Date of Contract:

Bond

Bond Amount:

Date of Bond:

(Date of Bond cannot be earlier than Effective Date of Contract)

Modifications to this Bond form:

☐ None ☐ See Paragraph 16

Surety and Contractor, intending to be legally bound hereby, subject to the terms set forth in this Performance Bond, do each cause this Performance Bond to be duly executed by an authorized officer, agent, or representative.

Contractor as Principal	Surety
_____ *(Full formal name of Contractor)*	_____ *(Full formal name of Surety) (corporate seal)*
By: _____ *(Signature)*	By: _____ *(Signature)(Attach Power of Attorney)*
Name: _____ *(Printed or typed)*	Name: _____ *(Printed or typed)*
Title: _____	Title: _____
Attest: _____ *(Signature)*	Attest: _____ *(Signature)*
Name: _____ *(Printed or typed)*	Name: _____ *(Printed or typed)*
Title: _____	Title: _____

Notes: (1) Provide supplemental execution by any additional parties, such as joint venturers. (2) Any singular reference to Contractor, Surety, Owner, or other party is considered plural where applicable.

Copyright© 2018 National Society of Professional Engineers, American Council of Engineering Companies, and American Society of Civil Engineers. All rights reserved.

1. The Contractor and Surety, jointly and severally, bind themselves, their heirs, executors, administrators, successors, and assigns to the Owner for the performance of the Construction Contract, which is incorporated herein by reference.

2. If the Contractor performs the Construction Contract, the Surety and the Contractor shall have no obligation under this Bond, except when applicable to participate in a conference as provided in Paragraph 3.

3. If there is no Owner Default under the Construction Contract, the Surety's obligation under this Bond will arise after:

    3.1. The Owner first provides notice to the Contractor and the Surety that the Owner is considering declaring a Contractor Default. Such notice may indicate whether the Owner is requesting a conference among the Owner, Contractor, and Surety to discuss the Contractor's performance. If the Owner does not request a conference, the Surety may, within five (5) business days after receipt of the Owner's notice, request such a conference. If the Surety timely requests a conference, the Owner shall attend. Unless the Owner agrees otherwise, any conference requested under this Paragraph 3.1 will be held within ten (10) business days of the Surety's receipt of the Owner's notice. If the Owner, the Contractor, and the Surety agree, the Contractor shall be allowed a reasonable time to perform the Construction Contract, but such an agreement does not waive the Owner's right, if any, subsequently to declare a Contractor Default;

    3.2. The Owner declares a Contractor Default, terminates the Construction Contract and notifies the Surety; and

    3.3. The Owner has agreed to pay the Balance of the Contract Price in accordance with the terms of the Construction Contract to the Surety or to a contractor selected to perform the Construction Contract.

4. Failure on the part of the Owner to comply with the notice requirement in Paragraph 3.1 does not constitute a failure to comply with a condition precedent to the Surety's obligations, or release the Surety from its obligations, except to the extent the Surety demonstrates actual prejudice.

5. When the Owner has satisfied the conditions of Paragraph 3, the Surety shall promptly and at the Surety's expense take one of the following actions:

    5.1. Arrange for the Contractor, with the consent of the Owner, to perform and complete the Construction Contract;

    5.2. Undertake to perform and complete the Construction Contract itself, through its agents or independent contractors;

    5.3. Obtain bids or negotiated proposals from qualified contractors acceptable to the Owner for a contract for performance and completion of the Construction Contract, arrange for a contract to be prepared for execution by the Owner and a contractor selected with the Owners concurrence, to be secured with performance and payment bonds executed by a qualified surety equivalent to the bonds issued on the Construction Contract, and pay to the Owner the amount of damages as described in Paragraph 7 in excess of the Balance of the Contract Price incurred by the Owner as a result of the Contractor Default; or

    5.4. Waive its right to perform and complete, arrange for completion, or obtain a new contractor, and with reasonable promptness under the circumstances:

Copyright© 2018 National Society of Professional Engineers, American Council of Engineering Companies, and American Society of Civil Engineers. All rights reserved.

5.4.1 After investigation, determine the amount for which it may be liable to the Owner and, as soon as practicable after the amount is determined, make payment to the Owner; or

5.4.2 Deny liability in whole or in part and notify the Owner, citing the reasons for denial.

6. If the Surety does not proceed as provided in Paragraph 5 with reasonable promptness, the Surety shall be deemed to be in default on this Bond seven days after receipt of an additional written notice from the Owner to the Surety demanding that the Surety perform its obligations under this Bond, and the Owner shall be entitled to enforce any remedy available to the Owner. If the Surety proceeds as provided in Paragraph 5.4, and the Owner refuses the payment, or the Surety has denied liability, in whole or in part, without further notice, the Owner shall be entitled to enforce any remedy available to the Owner.

7. If the Surety elects to act under Paragraph 5.1, 5.2, or 5.3, then the responsibilities of the Surety to the Owner will not be greater than those of the Contractor under the Construction Contract, and the responsibilities of the Owner to the Surety will not be greater than those of the Owner under the Construction Contract. Subject to the commitment by the Owner to pay the Balance of the Contract Price, the Surety is obligated, without duplication for:

   7.1. the responsibilities of the Contractor for correction of defective work and completion of the Construction Contract;

   7.2. additional legal, design professional, and delay costs resulting from the Contractor's Default, and resulting from the actions or failure to act of the Surety under Paragraph 5; and

   7.3. liquidated damages, or if no liquidated damages are specified in the Construction Contract, actual damages caused by delayed performance or non-performance of the Contractor.

8. If the Surety elects to act under Paragraph 5.1, 5.3, or 5.4, the Surety's liability is limited to the amount of this Bond.

9. The Surety shall not be liable to the Owner or others for obligations of the Contractor that are unrelated to the Construction Contract, and the Balance of the Contract Price will not be reduced or set off on account of any such unrelated obligations. No right of action will accrue on this Bond to any person or entity other than the Owner or its heirs, executors, administrators, successors, and assigns.

10. The Surety hereby waives notice of any change, including changes of time, to the Construction Contract or to related subcontracts, purchase orders, and other obligations.

11. Any proceeding, legal or equitable, under this Bond must be instituted in any court of competent jurisdiction in the location in which the work or part of the work is located and must be instituted within two years after a declaration of Contractor Default or within two years after the Contractor ceased working or within two years after the Surety refuses or fails to perform its obligations under this Bond, whichever occurs first. If the provisions of this paragraph are void or prohibited by law, the minimum periods of limitations available to sureties as a defense in the jurisdiction of the suit will be applicable.

12. Notice to the Surety, the Owner, or the Contractor must be mailed or delivered to the address shown on the page on which their signature appears.

13. When this Bond has been furnished to comply with a statutory or other legal requirement in the location where the construction was to be performed, any provision in this Bond conflicting with said statutory or legal requirement will be deemed deleted therefrom and provisions conforming to such

Copyright© 2018 National Society of Professional Engineers, American Council of Engineering Companies, and American Society of Civil Engineers. All rights reserved.

statutory or other legal requirement will be deemed incorporated herein. When so furnished, the intent is that this Bond will be construed as a statutory bond and not as a common law bond.

14. Definitions

    14.1. *Balance of the Contract Price*—The total amount payable by the Owner to the Contractor under the Construction Contract after all proper adjustments have been made including allowance for the Contractor for any amounts received or to be received by the Owner in settlement of insurance or other claims for damages to which the Contractor is entitled, reduced by all valid and proper payments made to or on behalf of the Contractor under the Construction Contract.

    14.2. *Construction Contract*—The agreement between the Owner and Contractor identified on the cover page, including all Contract Documents and changes made to the agreement and the Contract Documents.

    14.3. *Contractor Default*—Failure of the Contractor, which has not been remedied or waived, to perform or otherwise to comply with a material term of the Construction Contract.

    14.4. *Owner Default*—Failure of the Owner, which has not been remedied or waived, to pay the Contractor as required under the Construction Contract or to perform and complete or comply with the other material terms of the Construction Contract.

    14.5. *Contract Documents*—All the documents that comprise the agreement between the Owner and Contractor.

15. If this Bond is issued for an agreement between a contractor and subcontractor, the term Contractor in this Bond will be deemed to be Subcontractor and the term Owner will be deemed to be Contractor.

16. Modifications to this Bond are as follows:

    16.1. Pursuant to ARS Section 34-222.G:

    The conditions and provisions in the performance bond regarding the surety's obligations shall follow the following form:

    Now, therefore, the condition of this obligation is such, that if the principal faithfully performs and fulfills all of the undertakings, covenants, terms, conditions and agreements of the contract during the original term of the contract and any extension of the contract, with or without notice to the surety, and during the life of any guaranty required under the contract, and also performs and fulfills all of the undertakings, covenants, terms, conditions and agreements of all duly authorized modifications of the contract that may hereafter be made, notice of which modifications to the surety being hereby waived, the above obligation is void. Otherwise it remains in full force and effect.

    Provided, however, that this bond is executed pursuant to the provisions of title 34, chapter 2, article 2, Arizona Revised Statutes, and all liabilities on this bond shall be determined in accordance with the provisions of title 34, chapter 2, article 2, Arizona Revised Statutes, to the extent as if it were copied at length in this agreement.

    The prevailing party in a suit on this bond shall recover as part of the judgment reasonable attorney fees that may be fixed by a judge of the court.

Copyright© 2018 National Society of Professional Engineers, American Council of Engineering Companies, and American Society of Civil Engineers. All rights reserved.

PAYMENT BOND

Contractor	**Surety**
Name: **Fann Environmental, LLC** Address *(principal place of business)*: **6078 Corsair Ave Ste A** **Prescott, AZ 86301**	Name: Address *(principal place of business)*:
Owner	**Contract**
Name: **Town of Jerome** Mailing address *(principal place of business)*: **600 Clark Street, Jerome AZ, 86331**	Description *(name and location)*: **Jerome Wastewater Treatment Plant Improvements, Sewer Plant Road, Jerome, AZ 86331** Contract Price: **$10,699,947.60** Effective Date of Contract:

Bond

Bond Amount:

Date of Bond:

(Date of Bond cannot be earlier than Effective Date of Contract)

Modifications to this Bond form:

☐ None ☐ See Paragraph 18

Surety and Contractor, intending to be legally bound hereby, subject to the terms set forth in this Payment Bond, do each cause this Payment Bond to be duly executed by an authorized officer, agent, or representative.

Contractor as Principal	Surety
_____ *(Full formal name of Contractor)*	_____ *(Full formal name of Surety) (corporate seal)*
By: _____ *(Signature)*	By: _____ *(Signature)(Attach Power of Attorney)*
Name: _____ *(Printed or typed)*	Name: _____ *(Printed or typed)*
Title: _____	Title: _____
Attest: _____ *(Signature)*	Attest: _____ *(Signature)*
Name: _____ *(Printed or typed)*	Name: _____ *(Printed or typed)*
Title: _____	Title: _____

Notes: (1) Provide supplemental execution by any additional parties, such as joint venturers. (2) Any singular reference to Contractor, Surety, Owner, or other party is considered plural where applicable.

Copyright© 2018 National Society of Professional Engineers, American Council of Engineering Companies, and American Society of Civil Engineers. All rights reserved.

1. The Contractor and Surety, jointly and severally, bind themselves, their heirs, executors, administrators, successors, and assigns to the Owner to pay for labor, materials, and equipment furnished for use in the performance of the Construction Contract, which is incorporated herein by reference, subject to the following terms.

2. If the Contractor promptly makes payment of all sums due to Claimants, and defends, indemnifies, and holds harmless the Owner from claims, demands, liens, or suits by any person or entity seeking payment for labor, materials, or equipment furnished for use in the performance of the Construction Contract, then the Surety and the Contractor shall have no obligation under this Bond.

3. If there is no Owner Default under the Construction Contract, the Surety's obligation to the Owner under this Bond will arise after the Owner has promptly notified the Contractor and the Surety (at the address described in Paragraph 13) of claims, demands, liens, or suits against the Owner or the Owner's property by any person or entity seeking payment for labor, materials, or equipment furnished for use in the performance of the Construction Contract, and tendered defense of such claims, demands, liens, or suits to the Contractor and the Surety.

4. When the Owner has satisfied the conditions in Paragraph 3, the Surety shall promptly and at the Surety's expense defend, indemnify, and hold harmless the Owner against a duly tendered claim, demand, lien, or suit.

5. The Surety's obligations to a Claimant under this Bond will arise after the following:

    5.1. Claimants who do not have a direct contract with the Contractor

        5.1.1. have furnished a written notice of non-payment to the Contractor, stating with substantial accuracy the amount claimed and the name of the party to whom the materials were, or equipment was, furnished or supplied or for whom the labor was done or performed, within ninety (90) days after having last performed labor or last furnished materials or equipment included in the Claim; and

        5.1.2. have sent a Claim to the Surety (at the address described in Paragraph 13).

    5.2. Claimants who are employed by or have a direct contract with the Contractor have sent a Claim to the Surety (at the address described in Paragraph 13).

6. If a notice of non-payment required by Paragraph 5.1.1 is given by the Owner to the Contractor, that is sufficient to satisfy a Claimant's obligation to furnish a written notice of non-payment under Paragraph 5.1.1.

7. When a Claimant has satisfied the conditions of Paragraph 5.1 or 5.2, whichever is applicable, the Surety shall promptly and at the Surety's expense take the following actions:

    7.1. Send an answer to the Claimant, with a copy to the Owner, within sixty (60) days after receipt of the Claim, stating the amounts that are undisputed and the basis for challenging any amounts that are disputed; and

    7.2. Pay or arrange for payment of any undisputed amounts.

    7.3. The Surety's failure to discharge its obligations under Paragraph 7.1 or 7.2 will not be deemed to constitute a waiver of defenses the Surety or Contractor may have or acquire as to a Claim, except as to undisputed amounts for which the Surety and Claimant have reached agreement. If, however, the Surety fails to discharge its obligations under Paragraph 7.1 or 7.2, the Surety shall indemnify the Claimant for the reasonable attorney's fees the Claimant incurs thereafter to recover any sums found to be due and owing to the Claimant.

Copyright© 2018 National Society of Professional Engineers, American Council of Engineering Companies, and American Society of Civil Engineers. All rights reserved.

8. The Surety's total obligation will not exceed the amount of this Bond, plus the amount of reasonable attorney's fees provided under Paragraph 7.3, and the amount of this Bond will be credited for any payments made in good faith by the Surety.

9. Amounts owed by the Owner to the Contractor under the Construction Contract will be used for the performance of the Construction Contract and to satisfy claims, if any, under any construction performance bond. By the Contractor furnishing and the Owner accepting this Bond, they agree that all funds earned by the Contractor in the performance of the Construction Contract are dedicated to satisfying obligations of the Contractor and Surety under this Bond, subject to the Owner's priority to use the funds for the completion of the work.

10. The Surety shall not be liable to the Owner, Claimants, or others for obligations of the Contractor that are unrelated to the Construction Contract. The Owner shall not be liable for the payment of any costs or expenses of any Claimant under this Bond, and shall have under this Bond no obligation to make payments to or give notice on behalf of Claimants, or otherwise have any obligations to Claimants under this Bond.

11. The Surety hereby waives notice of any change, including changes of time, to the Construction Contract or to related subcontracts, purchase orders, and other obligations.

12. No suit or action will be commenced by a Claimant under this Bond other than in a court of competent jurisdiction in the state in which the project that is the subject of the Construction Contract is located or after the expiration of one year from the date (1) on which the Claimant sent a Claim to the Surety pursuant to Paragraph 5.1.2 or 5.2, or (2) on which the last labor or service was performed by anyone or the last materials or equipment were furnished by anyone under the Construction Contract, whichever of (1) or (2) first occurs. If the provisions of this paragraph are void or prohibited by law, the minimum period of limitation available to sureties as a defense in the jurisdiction of the suit will be applicable.

13. Notice and Claims to the Surety, the Owner, or the Contractor must be mailed or delivered to the address shown on the page on which their signature appears. Actual receipt of notice or Claims, however accomplished, will be sufficient compliance as of the date received.

14. When this Bond has been furnished to comply with a statutory or other legal requirement in the location where the construction was to be performed, any provision in this Bond conflicting with said statutory or legal requirement will be deemed deleted here from and provisions conforming to such statutory or other legal requirement will be deemed incorporated herein. When so furnished, the intent is that this Bond will be construed as a statutory bond and not as a common law bond.

15. Upon requests by any person or entity appearing to be a potential beneficiary of this Bond, the Contractor and Owner shall promptly furnish a copy of this Bond or shall permit a copy to be made.

16. Definitions

    16.1. *Claim*—A written statement by the Claimant including at a minimum:

        16.1.1. The name of the Claimant;

        16.1.2. The name of the person for whom the labor was done, or materials or equipment furnished;

        16.1.3. A copy of the agreement or purchase order pursuant to which labor, materials, or equipment was furnished for use in the performance of the Construction Contract;

        16.1.4. A brief description of the labor, materials, or equipment furnished;

Copyright© 2018 National Society of Professional Engineers, American Council of Engineering Companies, and American Society of Civil Engineers. All rights reserved.

16.1.5. The date on which the Claimant last performed labor or last furnished materials or equipment for use in the performance of the Construction Contract;

16.1.6. The total amount earned by the Claimant for labor, materials, or equipment furnished as of the date of the Claim;

16.1.7. The total amount of previous payments received by the Claimant; and

16.1.8. The total amount due and unpaid to the Claimant for labor, materials, or equipment furnished as of the date of the Claim.

16.2. *Claimant*—An individual or entity having a direct contract with the Contractor or with a subcontractor of the Contractor to furnish labor, materials, or equipment for use in the performance of the Construction Contract. The term Claimant also includes any individual or entity that has rightfully asserted a claim under an applicable mechanic's lien or similar statute against the real property upon which the Project is located. The intent of this Bond is to include without limitation in the terms of "labor, materials, or equipment" that part of the water, gas, power, light, heat, oil, gasoline, telephone service, or rental equipment used in the Construction Contract, architectural and engineering services required for performance of the work of the Contractor and the Contractor's subcontractors, and all other items for which a mechanic's lien may be asserted in the jurisdiction where the labor, materials, or equipment were furnished.

16.3. *Construction Contract*—The agreement between the Owner and Contractor identified on the cover page, including all Contract Documents and all changes made to the agreement and the Contract Documents.

16.4. *Owner Default*—Failure of the Owner, which has not been remedied or waived, to pay the Contractor as required under the Construction Contract or to perform and complete or comply with the other material terms of the Construction Contract.

16.5. *Contract Documents*—All the documents that comprise the agreement between the Owner and Contractor.

17. If this Bond is issued for an agreement between a contractor and subcontractor, the term Contractor in this Bond will be deemed to be Subcontractor and the term Owner will be deemed to be Contractor.

18. Modifications to this Bond are as follows:

18.1. Pursuant to ARS Section 34-222.G:

Now, therefore, the condition of this obligation is such, that if the principal promptly pays all monies due to all persons supplying labor or materials to the principal or the principal's subcontractors in the prosecution of the work provided for in the contract, this obligation is void. Otherwise it remains in full force and effect.

Provided, however, that this bond is executed pursuant to the provisions of title 34, chapter 2, article 2, Arizona Revised Statutes, and all liabilities on this bond shall be determined in accordance with the provisions, conditions and limitations of title 34, chapter 2, article 2, Arizona Revised Statutes, to the same extent as if they were copied at length in this agreement.

The prevailing party in a suit on this bond shall recover as a part of the judgment reasonable attorney fees that may be fixed by a judge of the court.

Copyright© 2018 National Society of Professional Engineers, American Council of Engineering Companies, and American Society of Civil Engineers. All rights reserved.

CERTIFICATE OF OWNER'S ATTORNEY AND AGENCY CONCURRENCE

Notes to User: This exhibit consists of two certificates, on a single page, to be attached to the Contract and signed upon execution. The first is a certificate to be signed by the Owner's attorney and the second is the concurrence to be signed by the State Engineer. This page is to be inserted after the Agreement between Owner and Contractor for Construction Contract (Stipulated Price) (EJCDC C-520, 2018) in the Construction Contract Documents.

CERTFICATE OF OWNER'S ATTORNEY PROJECT NAME:
Jerome Wastewater Treatment Plant Improvements
CONTRACTOR NAME AND CONTRACT NUMBER: **Fann Environmental, LLC**

I, the undersigned, **John Austin Gaylord**, the duly authorized and acting legal representative of **Town of Jerome (the "Town")**, do hereby certify as follows: I have examined the attached Contract(s) **(the "Contract"),** and performance and payment bond(s) **(the "Bonds")** and **have reviewed the actions of** ~~the manner of execution thereof~~ **the Town Council (the "Council") as certified by the Town Clerk**, and **assuming the genuineness of signatures not familiar to me, the legal capacity of all persons executing the Contract, and that the execution and delivery of such instruments and the transactions contemplated thereby are within the authority of the Town and have been duly authorized by proper proceedings;** I am of the opinion that ~~each of the aforesaid agreements is adequate and has been duly executed by the proper parties thereto acting through their duly authorized representatives; that said representatives have~~ **the Council has** full power and authority to execute ~~said agreements~~ **the Contract** on behalf of the ~~respective parties named thereon~~ **Town**; and that the foregoing agreements constitute valid and legally binding obligations upon the parties executing the same in accordance with the terms, conditions, and provisions thereof~~.~~**, subject to: (a) the effect of any applicable bankruptcy, insolvency, moratorium, reorganization or other similar laws affecting creditors' rights generally; and (b) general principals of equity, including, without limitation, the discretionary nature of specific performance and other equitable remedies.**

Name Date

AGENCY CONCURRENCE

As lender or insurer of funds to defray the costs of this Contract, and without liability for any payments thereunder, the Agency hereby concurs in the form, content, and execution of this Agreement.

Agency Representative Date

Name

STANDARD GENERAL CONDITIONS OF THE CONSTRUCTION CONTRACT

TABLE OF CONTENTS

Page

Article 1—Definitions and Terminology 1
1.01 Defined Terms 1
1.02 Terminology 6
Article 2—Preliminary Matters 7
2.01 Delivery of Performance and Payment Bonds; Evidence of Insurance 7
2.02 Copies of Documents 7
2.03 Before Starting Construction 7
2.04 Preconstruction Conference; Designation of Authorized Representatives 8
2.05 Acceptance of Schedules 8
2.06 Electronic Transmittals 8
Article 3—Contract Documents: Intent, Requirements, Reuse 9
3.01 Intent 9
3.02 Reference Standards 9
3.03 Reporting and Resolving Discrepancies 10
3.04 Requirements of the Contract Documents 10
3.05 Reuse of Documents 11
Article 4—Commencement and Progress of the Work 11
4.01 Commencement of Contract Times; Notice to Proceed 11
4.02 Starting the Work 11
4.03 Reference Points 11
4.04 Progress Schedule 12
4.05 Delays in Contractor's Progress 12
Article 5—Site; Subsurface and Physical Conditions; Hazardous Environmental Conditions 13
5.01 Availability of Lands 13
5.02 Use of Site and Other Areas 14
5.03 Subsurface and Physical Conditions 15
5.04 Differing Subsurface or Physical Conditions 16

Copyright© 2018 National Society of Professional Engineers, American Council of Engineering Companies, and American Society of Civil Engineers. All rights reserved.

5.05 Underground Facilities....17
5.06 Hazardous Environmental Conditions at Site....19
Article 6—Bonds and Insurance....21
6.01 Performance, Payment, and Other Bonds....21
6.02 Insurance—General Provisions....22
6.03 Contractor's Insurance....24
6.04 Builder's Risk and Other Property Insurance....25
6.05 Property Losses; Subrogation....25
6.06 Receipt and Application of Property Insurance Proceeds....27
Article 7—Contractor's Responsibilities....27
7.01 Contractor's Means and Methods of Construction....27
7.02 Supervision and Superintendence....27
7.03 Labor; Working Hours....27
7.04 Services, Materials, and Equipment....28
7.05 "Or Equals"....28
7.06 Substitutes....29
7.07 Concerning Subcontractors and Suppliers....31
7.08 Patent Fees and Royalties....32
7.09 Permits....33
7.10 Taxes....33
7.11 Laws and Regulations....33
7.12 Record Documents....33
7.13 Safety and Protection....34
7.14 Hazard Communication Programs....35
7.15 Emergencies....35
7.16 Submittals....35
7.17 Contractor's General Warranty and Guarantee....38
7.18 Indemnification....39
7.19 Delegation of Professional Design Services....39
Article 8—Other Work at the Site....40
8.01 Other Work....40
8.02 Coordination....41
8.03 Legal Relationships....41

Copyright© 2018 National Society of Professional Engineers, American Council of Engineering Companies, and American Society of Civil Engineers. All rights reserved.

Article 9—Owner's Responsibilities....42
9.01 Communications to Contractor....42
9.02 Replacement of Engineer....42
9.03 Furnish Data....42
9.04 Pay When Due....42
9.05 Lands and Easements; Reports, Tests, and Drawings....43
9.06 Insurance....43
9.07 Change Orders....43
9.08 Inspections, Tests, and Approvals....43
9.09 Limitations on Owner's Responsibilities....43
9.10 Undisclosed Hazardous Environmental Condition....43
9.11 Evidence of Financial Arrangements....43
9.12 Safety Programs....43
Article 10—Engineer's Status During Construction....44
10.01 Owner's Representative....44
10.02 Visits to Site....44
10.03 Resident Project Representative....44
10.04 Engineer's Authority....44
10.05 Determinations for Unit Price Work....45
10.06 Decisions on Requirements of Contract Documents and Acceptability of Work....45
10.07 Limitations on Engineer's Authority and Responsibilities....45
10.08 Compliance with Safety Program....45
Article 11—Changes to the Contract....46
11.01 Amending and Supplementing the Contract....46
11.02 Change Orders....46
11.03 Work Change Directives....46
11.04 Field Orders....47
11.05 Owner-Authorized Changes in the Work....47
11.06 Unauthorized Changes in the Work....47
11.07 Change of Contract Price....47
11.08 Change of Contract Times....49
11.09 Change Proposals....49
11.10 Notification to Surety....50

Copyright© 2018 National Society of Professional Engineers, American Council of Engineering Companies, and American Society of Civil Engineers. All rights reserved.

Article 12—Claims 50
12.01 Claims 50
Article 13—Cost of the Work; Allowances; Unit Price Work 51
13.01 Cost of the Work 51
13.02 Allowances 55
13.03 Unit Price Work 55
Article 14—Tests and Inspections; Correction, Removal, or Acceptance of Defective Work 56
14.01 Access to Work 56
14.02 Tests, Inspections, and Approvals 56
14.03 Defective Work 57
14.04 Acceptance of Defective Work 58
14.05 Uncovering Work 58
14.06 Owner May Stop the Work 58
14.07 Owner May Correct Defective Work 59
Article 15—Payments to Contractor; Set-Offs; Completion; Correction Period 59
15.01 Progress Payments 59
15.02 Contractor's Warranty of Title 62
15.03 Substantial Completion 62
15.04 Partial Use or Occupancy 63
15.05 Final Inspection 64
15.06 Final Payment 64
15.07 Waiver of Claims 65
15.08 Correction Period 66
Article 16—Suspension of Work and Termination 67
16.01 Owner May Suspend Work 67
16.02 Owner May Terminate for Cause 67
16.03 Owner May Terminate for Convenience 68
16.04 Contractor May Stop Work or Terminate 68
Article 17—Final Resolution of Disputes 69
17.01 Methods and Procedures 69
Article 18—Miscellaneous 69
18.01 Giving Notice 69
18.02 Computation of Times 69

Copyright© 2018 National Society of Professional Engineers, American Council of Engineering Companies, and American Society of Civil Engineers. All rights reserved.

18.03 Cumulative Remedies 70
18.04 Limitation of Damages 70
18.05 No Waiver 70
18.06 Survival of Obligations 70
18.07 Controlling Law 70
18.08 Assignment of Contract 70
18.09 Successors and Assigns 70
18.10 Headings 70

Copyright© 2018 National Society of Professional Engineers, American Council of Engineering Companies, and American Society of Civil Engineers. All rights reserved.

STANDARD GENERAL CONDITIONS OF THE CONSTRUCTION CONTRACT

ARTICLE 1—DEFINITIONS AND TERMINOLOGY

1.01 *Defined Terms*

A. Wherever used in the Bidding Requirements or Contract Documents, a term printed with initial capital letters, including the term's singular and plural forms, will have the meaning indicated in the definitions below. In addition to terms specifically defined, terms with initial capital letters in the Contract Documents include references to identified articles and paragraphs, and the titles of other documents or forms.

1. *Addenda*—Written or graphic instruments issued prior to the opening of Bids which clarify, correct, or change the Bidding Requirements or the proposed Contract Documents.

2. *Agreement*—The written instrument, executed by Owner and Contractor, that sets forth the Contract Price and Contract Times, identifies the parties and the Engineer, and designates the specific items that are Contract Documents.

3. *Application for Payment*—The document prepared by Contractor, in a form acceptable to Engineer, to request progress or final payments, and which is to be accompanied by such supporting documentation as is required by the Contract Documents.

4. *Bid*—The offer of a Bidder submitted on the prescribed form setting forth the prices for the Work to be performed.

5. *Bidder*—An individual or entity that submits a Bid to Owner.

6. *Bidding Documents*—The Bidding Requirements, the proposed Contract Documents, and all Addenda.

7. *Bidding Requirements*—The Advertisement or invitation to bid, Instructions to Bidders, Bid Bond or other Bid security, if any, the Bid Form, and the Bid with any attachments.

8. *Change Order*—A document which is signed by Contractor and Owner and authorizes an addition, deletion, or revision in the Work or an adjustment in the Contract Price or the Contract Times, or other revision to the Contract, issued on or after the Effective Date of the Contract.

9. *Change Proposal*—A written request by Contractor, duly submitted in compliance with the procedural requirements set forth herein, seeking an adjustment in Contract Price or Contract Times; contesting an initial decision by Engineer concerning the requirements of the Contract Documents or the acceptability of Work under the Contract Documents; challenging a set-off against payments due; or seeking other relief with respect to the terms of the Contract.

10. *Claim*

a. A demand or assertion by Owner directly to Contractor, duly submitted in compliance with the procedural requirements set forth herein, seeking an adjustment of Contract Price or Contract Times; contesting an initial decision by Engineer concerning the

Copyright© 2018 National Society of Professional Engineers, American Council of Engineering Companies, and American Society of Civil Engineers. All rights reserved.

requirements of the Contract Documents or the acceptability of Work under the Contract Documents; contesting Engineer's decision regarding a Change Proposal; seeking resolution of a contractual issue that Engineer has declined to address; or seeking other relief with respect to the terms of the Contract.

b. A demand or assertion by Contractor directly to Owner, duly submitted in compliance with the procedural requirements set forth herein, contesting Engineer's decision regarding a Change Proposal, or seeking resolution of a contractual issue that Engineer has declined to address.

c. A demand or assertion by Owner or Contractor, duly submitted in compliance with the procedural requirements set forth herein, made pursuant to Paragraph 12.01.A.4, concerning disputes arising after Engineer has issued a recommendation of final payment.

d. A demand for money or services by a third party is not a Claim.

11. *Constituent of Concern*—Asbestos, petroleum, radioactive materials, polychlorinated biphenyls (PCBs), lead-based paint (as defined by the HUD/EPA standard), hazardous waste, and any substance, product, waste, or other material of any nature whatsoever that is or becomes listed, regulated, or addressed pursuant to Laws and Regulations regulating, relating to, or imposing liability or standards of conduct concerning, any hazardous, toxic, or dangerous waste, substance, or material.

12. *Contract*—The entire and integrated written contract between Owner and Contractor concerning the Work.

13. *Contract Documents*—Those items so designated in the Agreement, and which together comprise the Contract.

14. *Contract Price*—The money that Owner has agreed to pay Contractor for completion of the Work in accordance with the Contract Documents.

15. *Contract Times*—The number of days or the dates by which Contractor shall: (a) achieve Milestones, if any; (b) achieve Substantial Completion; and (c) complete the Work.

16. *Contractor*—The individual or entity with which Owner has contracted for performance of the Work.

17. *Cost of the Work*—See Paragraph 13.01 for definition.

18. *Drawings*—The part of the Contract that graphically shows the scope, extent, and character of the Work to be performed by Contractor.

19. *Effective Date of the Contract*—The date, indicated in the Agreement, on which the Contract becomes effective.

20. *Electronic Document*—Any Project-related correspondence, attachments to correspondence, data, documents, drawings, information, or graphics, including but not limited to Shop Drawings and other Submittals, that are in an electronic or digital format.

21. *Electronic Means*—Electronic mail (email), upload/download from a secure Project website, or other communications methods that allow: (a) the transmission or communication of Electronic Documents; (b) the documentation of transmissions, including sending and receipt; (c) printing of the transmitted Electronic Document by the

Copyright© 2018 National Society of Professional Engineers, American Council of Engineering Companies, and American Society of Civil Engineers. All rights reserved.

recipient; (d) the storage and archiving of the Electronic Document by sender and recipient; and (e) the use by recipient of the Electronic Document for purposes permitted by this Contract. Electronic Means does not include the use of text messaging, or of Facebook, Twitter, Instagram, or similar social media services for transmission of Electronic Documents.

22. *Engineer*—The individual or entity named as such in the Agreement.

23. *Field Order*—A written order issued by Engineer which requires minor changes in the Work but does not change the Contract Price or the Contract Times.

24. *Hazardous Environmental Condition*—The presence at the Site of Constituents of Concern in such quantities or circumstances that may present a danger to persons or property exposed thereto.

    a. The presence at the Site of materials that are necessary for the execution of the Work, or that are to be incorporated into the Work, and that are controlled and contained pursuant to industry practices, Laws and Regulations, and the requirements of the Contract, is not a Hazardous Environmental Condition.

    b. The presence of Constituents of Concern that are to be removed or remediated as part of the Work is not a Hazardous Environmental Condition.

    c. The presence of Constituents of Concern as part of the routine, anticipated, and obvious working conditions at the Site, is not a Hazardous Environmental Condition.

25. *Laws and Regulations; Laws or Regulations*—Any and all applicable laws, statutes, rules, regulations, ordinances, codes, and binding decrees, resolutions, and orders of any and all governmental bodies, agencies, authorities, and courts having jurisdiction.

26. *Liens*—Charges, security interests, or encumbrances upon Contract-related funds, real property, or personal property.

27. *Milestone*—A principal event in the performance of the Work that the Contract requires Contractor to achieve by an intermediate completion date, or by a time prior to Substantial Completion of all the Work.

28. *Notice of Award*—The written notice by Owner to a Bidder of Owner's acceptance of the Bid.

29. *Notice to Proceed*—A written notice by Owner to Contractor fixing the date on which the Contract Times will commence to run and on which Contractor shall start to perform the Work.

30. *Owner*—The individual or entity with which Contractor has contracted regarding the Work, and which has agreed to pay Contractor for the performance of the Work, pursuant to the terms of the Contract.

31. *Progress Schedule*—A schedule, prepared and maintained by Contractor, describing the sequence and duration of the activities comprising Contractor's plan to accomplish the Work within the Contract Times.

32. *Project*—The total undertaking to be accomplished for Owner by engineers, contractors, and others, including planning, study, design, construction, testing, commissioning, and start-up, and of which the Work to be performed under the Contract Documents is a part.

Copyright© 2018 National Society of Professional Engineers, American Council of Engineering Companies, and American Society of Civil Engineers. All rights reserved.

33. *Resident Project Representative*—The authorized representative of Engineer assigned to assist Engineer at the Site. As used herein, the term Resident Project Representative (RPR) includes any assistants or field staff of Resident Project Representative.

34. *Samples*—Physical examples of materials, equipment, or workmanship that are representative of some portion of the Work and that establish the standards by which such portion of the Work will be judged.

35. *Schedule of Submittals*—A schedule, prepared and maintained by Contractor, of required submittals and the time requirements for Engineer's review of the submittals.

36. *Schedule of Values*—A schedule, prepared and maintained by Contractor, allocating portions of the Contract Price to various portions of the Work and used as the basis for reviewing Contractor's Applications for Payment.

37. *Shop Drawings*—All drawings, diagrams, illustrations, schedules, and other data or information that are specifically prepared or assembled by or for Contractor and submitted by Contractor to illustrate some portion of the Work. Shop Drawings, whether approved or not, are not Drawings and are not Contract Documents.

38. *Site*—Lands or areas indicated in the Contract Documents as being furnished by Owner upon which the Work is to be performed, including rights-of-way and easements, and such other lands or areas furnished by Owner which are designated for the use of Contractor.

39. *Specifications*—The part of the Contract that consists of written requirements for materials, equipment, systems, standards, and workmanship as applied to the Work, and certain administrative requirements and procedural matters applicable to the Work.

40. *Subcontractor*—An individual or entity having a direct contract with Contractor or with any other Subcontractor for the performance of a part of the Work.

41. *Submittal*—A written or graphic document, prepared by or for Contractor, which the Contract Documents require Contractor to submit to Engineer, or that is indicated as a Submittal in the Schedule of Submittals accepted by Engineer. Submittals may include Shop Drawings and Samples; schedules; product data; Owner-delegated designs; sustainable design information; information on special procedures; testing plans; results of tests and evaluations, source quality-control testing and inspections, and field or Site quality-control testing and inspections; warranties and certifications; Suppliers' instructions and reports; records of delivery of spare parts and tools; operations and maintenance data; Project photographic documentation; record documents; and other such documents required by the Contract Documents. Submittals, whether or not approved or accepted by Engineer, are not Contract Documents. Change Proposals, Change Orders, Claims, notices, Applications for Payment, and requests for interpretation or clarification are not Submittals.

42. *Substantial Completion*—The time at which the Work (or a specified part thereof) has progressed to the point where, in the opinion of Engineer, the Work (or a specified part thereof) is sufficiently complete, in accordance with the Contract Documents, so that the Work (or a specified part thereof) can be utilized for the purposes for which it is intended. The terms "substantially complete" and "substantially completed" as applied to all or part of the Work refer to Substantial Completion of such Work.

Copyright© 2018 National Society of Professional Engineers, American Council of Engineering Companies, and American Society of Civil Engineers. All rights reserved.

43. *Successful Bidder*—The Bidder to which the Owner makes an award of contract.

44. *Supplementary Conditions*—The part of the Contract that amends or supplements these General Conditions.

45. *Supplier*—A manufacturer, fabricator, supplier, distributor, or vendor having a direct contract with Contractor or with any Subcontractor to furnish materials or equipment to be incorporated in the Work by Contractor or a Subcontractor.

46. *Technical Data*

    a. Those items expressly identified as Technical Data in the Supplementary Conditions, with respect to either (1) existing subsurface conditions at or adjacent to the Site, or existing physical conditions at or adjacent to the Site including existing surface or subsurface structures (except Underground Facilities) or (2) Hazardous Environmental Conditions at the Site.

    b. If no such express identifications of Technical Data have been made with respect to conditions at the Site, then Technical Data is defined, with respect to conditions at the Site under Paragraphs 5.03, 5.04, and 5.06, as the data contained in boring logs, recorded measurements of subsurface water levels, assessments of the condition of subsurface facilities, laboratory test results, and other factual, objective information regarding conditions at the Site that are set forth in any geotechnical, environmental, or other Site or facilities conditions report prepared for the Project and made available to Contractor.

    c. Information and data regarding the presence or location of Underground Facilities are not intended to be categorized, identified, or defined as Technical Data, and instead Underground Facilities are shown or indicated on the Drawings.

47. *Underground Facilities*—All active or not-in-service underground lines, pipelines, conduits, ducts, encasements, cables, wires, manholes, vaults, tanks, tunnels, or other such facilities or systems at the Site, including but not limited to those facilities or systems that produce, transmit, distribute, or convey telephone or other communications, cable television, fiber optic transmissions, power, electricity, light, heat, gases, oil, crude oil products, liquid petroleum products, water, steam, waste, wastewater, storm water, other liquids or chemicals, or traffic or other control systems. An abandoned facility or system is not an Underground Facility.

48. *Unit Price Work*—Work to be paid for on the basis of unit prices.

49. *Work*—The entire construction or the various separately identifiable parts thereof required to be provided under the Contract Documents. Work includes and is the result of performing or providing all labor, services, and documentation necessary to produce such construction; furnishing, installing, and incorporating all materials and equipment into such construction; and may include related services such as testing, start-up, and commissioning, all as required by the Contract Documents.

50. *Work Change Directive*—A written directive to Contractor issued on or after the Effective Date of the Contract, signed by Owner and recommended by Engineer, ordering an addition, deletion, or revision in the Work.

Copyright© 2018 National Society of Professional Engineers, American Council of Engineering Companies, and American Society of Civil Engineers. All rights reserved.

1.02 *Terminology*

A. The words and terms discussed in Paragraphs 1.02.B, C, D, and E are not defined terms that require initial capital letters, but, when used in the Bidding Requirements or Contract Documents, have the indicated meaning.

B. *Intent of Certain Terms or Adjectives*: The Contract Documents include the terms "as allowed," "as approved," "as ordered," "as directed" or terms of like effect or import to authorize an exercise of professional judgment by Engineer. In addition, the adjectives "reasonable," "suitable," "acceptable," "proper," "satisfactory," or adjectives of like effect or import are used to describe an action or determination of Engineer as to the Work. It is intended that such exercise of professional judgment, action, or determination will be solely to evaluate, in general, the Work for compliance with the information in the Contract Documents and with the design concept of the Project as a functioning whole as shown or indicated in the Contract Documents (unless there is a specific statement indicating otherwise). The use of any such term or adjective is not intended to and shall not be effective to assign to Engineer any duty or authority to supervise or direct the performance of the Work, or any duty or authority to undertake responsibility contrary to the provisions of Article 10 or any other provision of the Contract Documents.

C. *Day*: The word "day" means a calendar day of 24 hours measured from midnight to the next midnight.

D. *Defective*: The word "defective," when modifying the word "Work," refers to Work that is unsatisfactory, faulty, or deficient in that it:

1. does not conform to the Contract Documents;

2. does not meet the requirements of any applicable inspection, reference standard, test, or approval referred to in the Contract Documents; or

3. has been damaged prior to Engineer's recommendation of final payment (unless responsibility for the protection thereof has been assumed by Owner at Substantial Completion in accordance with Paragraph 15.03 or Paragraph 15.04).

E. *Furnish, Install, Perform, Provide*

1. The word "furnish," when used in connection with services, materials, or equipment, means to supply and deliver said services, materials, or equipment to the Site (or some other specified location) ready for use or installation and in usable or operable condition.

2. The word "install," when used in connection with services, materials, or equipment, means to put into use or place in final position said services, materials, or equipment complete and ready for intended use.

3. The words "perform" or "provide," when used in connection with services, materials, or equipment, means to furnish and install said services, materials, or equipment complete and ready for intended use.

4. If the Contract Documents establish an obligation of Contractor with respect to specific services, materials, or equipment, but do not expressly use any of the four words "furnish," "install," "perform," or "provide," then Contractor shall furnish and install said services, materials, or equipment complete and ready for intended use.

Copyright© 2018 National Society of Professional Engineers, American Council of Engineering Companies, and American Society of Civil Engineers. All rights reserved.

F. *Contract Price or Contract Times*: References to a change in "Contract Price or Contract Times" or "Contract Times or Contract Price" or similar, indicate that such change applies to (1) Contract Price, (2) Contract Times, or (3) both Contract Price and Contract Times, as warranted, even if the term "or both" is not expressed.

G. Unless stated otherwise in the Contract Documents, words or phrases that have a well-known technical or construction industry or trade meaning are used in the Contract Documents in accordance with such recognized meaning.

ARTICLE 2—PRELIMINARY MATTERS

2.01 *Delivery of Performance and Payment Bonds; Evidence of Insurance*

A. *Performance and Payment Bonds*: When Contractor delivers the signed counterparts of the Agreement to Owner, Contractor shall also deliver to Owner the performance bond and payment bond (if the Contract requires Contractor to furnish such bonds).

B. *Evidence of Contractor's Insurance*: When Contractor delivers the signed counterparts of the Agreement to Owner, Contractor shall also deliver to Owner, with copies to each additional insured (as identified in the Contract), the certificates, endorsements, and other evidence of insurance required to be provided by Contractor in accordance with Article 6, except to the extent the Supplementary Conditions expressly establish other dates for delivery of specific insurance policies.

C. *Evidence of Owner's Insurance*: After receipt of the signed counterparts of the Agreement and all required bonds and insurance documentation, Owner shall promptly deliver to Contractor, with copies to each additional insured (as identified in the Contract), the certificates and other evidence of insurance required to be provided by Owner under Article 6.

2.02 *Copies of Documents*

A. Owner shall furnish to Contractor four printed copies of the Contract (including one fully signed counterpart of the Agreement), and one copy in electronic portable document format (PDF). Additional printed copies will be furnished upon request at the cost of reproduction.

B. Owner shall maintain and safeguard at least one original printed record version of the Contract, including Drawings and Specifications signed and sealed by Engineer and other design professionals. Owner shall make such original printed record version of the Contract available to Contractor for review. Owner may delegate the responsibilities under this provision to Engineer.

2.03 *Before Starting Construction*

A. *Preliminary Schedules*: Within 10 days after the Effective Date of the Contract (or as otherwise required by the Contract Documents), Contractor shall submit to Engineer for timely review:

1. a preliminary Progress Schedule indicating the times (numbers of days or dates) for starting and completing the various stages of the Work, including any Milestones specified in the Contract;

2. a preliminary Schedule of Submittals; and

3. a preliminary Schedule of Values for all of the Work which includes quantities and prices of items which when added together equal the Contract Price and subdivides the Work

Copyright© 2018 National Society of Professional Engineers, American Council of Engineering Companies, and American Society of Civil Engineers. All rights reserved.

into component parts in sufficient detail to serve as the basis for progress payments during performance of the Work. Such prices will include an appropriate amount of overhead and profit applicable to each item of Work.

2.04 *Preconstruction Conference; Designation of Authorized Representatives*

A. Before any Work at the Site is started, a conference attended by Owner, Contractor, Engineer, and others as appropriate will be held to establish a working understanding among the parties as to the Work, and to discuss the schedules referred to in Paragraph 2.03.A, procedures for handling Shop Drawings, Samples, and other Submittals, processing Applications for Payment, electronic or digital transmittals, and maintaining required records.

B. At this conference Owner and Contractor each shall designate, in writing, a specific individual to act as its authorized representative with respect to the services and responsibilities under the Contract. Such individuals shall have the authority to transmit and receive information, render decisions relative to the Contract, and otherwise act on behalf of each respective party.

2.05 *Acceptance of Schedules*

A. At least 10 days before submission of the first Application for Payment a conference, attended by Contractor, Engineer, and others as appropriate, will be held to review the schedules submitted in accordance with Paragraph 2.03.A. No progress payment will be made to Contractor until acceptable schedules are submitted to Engineer.

1. The Progress Schedule will be acceptable to Engineer if it provides an orderly progression of the Work to completion within the Contract Times. Such acceptance will not impose on Engineer responsibility for the Progress Schedule, for sequencing, scheduling, or progress of the Work, nor interfere with or relieve Contractor from Contractor's full responsibility therefor.

2. Contractor's Schedule of Submittals will be acceptable to Engineer if it provides a workable arrangement for reviewing and processing the required submittals.

3. Contractor's Schedule of Values will be acceptable to Engineer as to form and substance if it provides a reasonable allocation of the Contract Price to the component parts of the Work.

4. If a schedule is not acceptable, Contractor will have an additional 10 days to revise and resubmit the schedule.

2.06 *Electronic Transmittals*

A. Except as otherwise stated elsewhere in the Contract, the Owner, Engineer, and Contractor may send, and shall accept, Electronic Documents transmitted by Electronic Means.

B. If the Contract does not establish protocols for Electronic Means, then Owner, Engineer, and Contractor shall jointly develop such protocols.

C. Subject to any governing protocols for Electronic Means, when transmitting Electronic Documents by Electronic Means, the transmitting party makes no representations as to long-term compatibility, usability, or readability of the Electronic Documents resulting from the recipient's use of software application packages, operating systems, or computer hardware differing from those used in the drafting or transmittal of the Electronic Documents.

Copyright© 2018 National Society of Professional Engineers, American Council of Engineering Companies, and American Society of Civil Engineers. All rights reserved.

ARTICLE 3—CONTRACT DOCUMENTS: INTENT, REQUIREMENTS, REUSE

3.01 *Intent*

A. The Contract Documents are complementary; what is required by one Contract Document is as binding as if required by all.

B. It is the intent of the Contract Documents to describe a functionally complete Project (or part thereof) to be constructed in accordance with the Contract Documents.

C. Unless otherwise stated in the Contract Documents, if there is a discrepancy between the electronic versions of the Contract Documents (including any printed copies derived from such electronic versions) and the printed record version, the printed record version will govern.

D. The Contract supersedes prior negotiations, representations, and agreements, whether written or oral.

E. Engineer will issue clarifications and interpretations of the Contract Documents as provided herein.

F. Any provision or part of the Contract Documents held to be void or unenforceable under any Law or Regulation will be deemed stricken, and all remaining provisions will continue to be valid and binding upon Owner and Contractor, which agree that the Contract Documents will be reformed to replace such stricken provision or part thereof with a valid and enforceable provision that comes as close as possible to expressing the intention of the stricken provision.

G. Nothing in the Contract Documents creates:

1. any contractual relationship between Owner or Engineer and any Subcontractor, Supplier, or other individual or entity performing or furnishing any of the Work, for the benefit of such Subcontractor, Supplier, or other individual or entity; or

2. any obligation on the part of Owner or Engineer to pay or to see to the payment of any money due any such Subcontractor, Supplier, or other individual or entity, except as may otherwise be required by Laws and Regulations.

3.02 *Reference Standards*

A. *Standards Specifications, Codes, Laws and Regulations*

1. Reference in the Contract Documents to standard specifications, manuals, reference standards, or codes of any technical society, organization, or association, or to Laws or Regulations, whether such reference be specific or by implication, means the standard specification, manual, reference standard, code, or Laws or Regulations in effect at the time of opening of Bids (or on the Effective Date of the Contract if there were no Bids), except as may be otherwise specifically stated in the Contract Documents.

2. No provision of any such standard specification, manual, reference standard, or code, and no instruction of a Supplier, will be effective to change the duties or responsibilities of Owner, Contractor, or Engineer from those set forth in the part of the Contract Documents prepared by or for Engineer. No such provision or instruction shall be effective to assign to Owner or Engineer any duty or authority to supervise or direct the performance of the Work, or any duty or authority to undertake responsibility

Copyright© 2018 National Society of Professional Engineers, American Council of Engineering Companies, and American Society of Civil Engineers. All rights reserved.

inconsistent with the provisions of the part of the Contract Documents prepared by or for Engineer.

3.03 *Reporting and Resolving Discrepancies*

A. *Reporting Discrepancies*

1. *Contractor's Verification of Figures and Field Measurements*: Before undertaking each part of the Work, Contractor shall carefully study the Contract Documents, and check and verify pertinent figures and dimensions therein, particularly with respect to applicable field measurements. Contractor shall promptly report in writing to Engineer any conflict, error, ambiguity, or discrepancy that Contractor discovers, or has actual knowledge of, and shall not proceed with any Work affected thereby until the conflict, error, ambiguity, or discrepancy is resolved by a clarification or interpretation by Engineer, or by an amendment or supplement to the Contract issued pursuant to Paragraph 11.01.

2. *Contractor's Review of Contract Documents*: If, before or during the performance of the Work, Contractor discovers any conflict, error, ambiguity, or discrepancy within the Contract Documents, or between the Contract Documents and (a) any applicable Law or Regulation, (b) actual field conditions, (c) any standard specification, manual, reference standard, or code, or (d) any instruction of any Supplier, then Contractor shall promptly report it to Engineer in writing. Contractor shall not proceed with the Work affected thereby (except in an emergency as required by Paragraph 7.15) until the conflict, error, ambiguity, or discrepancy is resolved, by a clarification or interpretation by Engineer, or by an amendment or supplement to the Contract issued pursuant to Paragraph 11.01.

3. Contractor shall not be liable to Owner or Engineer for failure to report any conflict, error, ambiguity, or discrepancy in the Contract Documents unless Contractor had actual knowledge thereof.

B. *Resolving Discrepancies*

1. Except as may be otherwise specifically stated in the Contract Documents, the provisions of the part of the Contract Documents prepared by or for Engineer take precedence in resolving any conflict, error, ambiguity, or discrepancy between such provisions of the Contract Documents and:

a. the provisions of any standard specification, manual, reference standard, or code, or the instruction of any Supplier (whether or not specifically incorporated by reference as a Contract Document); or

b. the provisions of any Laws or Regulations applicable to the performance of the Work (unless such an interpretation of the provisions of the Contract Documents would result in violation of such Law or Regulation).

3.04 *Requirements of the Contract Documents*

A. During the performance of the Work and until final payment, Contractor and Owner shall submit to the Engineer in writing all matters in question concerning the requirements of the Contract Documents (sometimes referred to as requests for information or interpretation—RFIs), or relating to the acceptability of the Work under the Contract Documents, as soon as possible after such matters arise. Engineer will be the initial interpreter of the requirements of the Contract Documents, and judge of the acceptability of the Work.

Copyright© 2018 National Society of Professional Engineers, American Council of Engineering Companies, and American Society of Civil Engineers. All rights reserved.

B. Engineer will, with reasonable promptness, render a written clarification, interpretation, or decision on the issue submitted, or initiate an amendment or supplement to the Contract Documents. Engineer's written clarification, interpretation, or decision will be final and binding on Contractor, unless it appeals by submitting a Change Proposal, and on Owner, unless it appeals by filing a Claim.

C. If a submitted matter in question concerns terms and conditions of the Contract Documents that do not involve (1) the performance or acceptability of the Work under the Contract Documents, (2) the design (as set forth in the Drawings, Specifications, or otherwise), or (3) other engineering or technical matters, then Engineer will promptly notify Owner and Contractor in writing that Engineer is unable to provide a decision or interpretation. If Owner and Contractor are unable to agree on resolution of such a matter in question, either party may pursue resolution as provided in Article 12.

3.05 *Reuse of Documents*

A. Contractor and its Subcontractors and Suppliers shall not:

1. have or acquire any title to or ownership rights in any of the Drawings, Specifications, or other documents (or copies of any thereof) prepared by or bearing the seal of Engineer or its consultants, including electronic media versions, or reuse any such Drawings, Specifications, other documents, or copies thereof on extensions of the Project or any other project without written consent of Owner and Engineer and specific written verification or adaptation by Engineer; or

2. have or acquire any title or ownership rights in any other Contract Documents, reuse any such Contract Documents for any purpose without Owner's express written consent, or violate any copyrights pertaining to such Contract Documents.

B. The prohibitions of this Paragraph 3.05 will survive final payment, or termination of the Contract. Nothing herein precludes Contractor from retaining copies of the Contract Documents for record purposes.

ARTICLE 4—COMMENCEMENT AND PROGRESS OF THE WORK

4.01 *Commencement of Contract Times; Notice to Proceed*

A. The Contract Times will commence to run on the 30th day after the Effective Date of the Contract or, if a Notice to Proceed is given, on the day indicated in the Notice to Proceed. A Notice to Proceed may be given at any time within 30 days after the Effective Date of the Contract. In no event will the Contract Times commence to run later than the 60th day after the day of Bid opening or the 30th day after the Effective Date of the Contract, whichever date is earlier.

4.02 *Starting the Work*

A. Contractor shall start to perform the Work on the date when the Contract Times commence to run. No Work may be done at the Site prior to such date.

4.03 *Reference Points*

A. Owner shall provide engineering surveys to establish reference points for construction which in Engineer's judgment are necessary to enable Contractor to proceed with the Work. Contractor shall be responsible for laying out the Work, shall protect and preserve the

Copyright© 2018 National Society of Professional Engineers, American Council of Engineering Companies, and American Society of Civil Engineers. All rights reserved.

established reference points and property monuments, and shall make no changes or relocations without the prior written approval of Owner. Contractor shall report to Engineer whenever any reference point or property monument is lost or destroyed or requires relocation because of necessary changes in grades or locations, and shall be responsible for the accurate replacement or relocation of such reference points or property monuments by professionally qualified personnel.

4.04 *Progress Schedule*

A. Contractor shall adhere to the Progress Schedule established in accordance with Paragraph 2.05 as it may be adjusted from time to time as provided below.

1. Contractor shall submit to Engineer for acceptance (to the extent indicated in Paragraph 2.05) proposed adjustments in the Progress Schedule that will not result in changing the Contract Times.

2. Proposed adjustments in the Progress Schedule that will change the Contract Times must be submitted in accordance with the requirements of Article 11.

B. Contractor shall carry on the Work and adhere to the Progress Schedule during all disputes or disagreements with Owner. No Work will be delayed or postponed pending resolution of any disputes or disagreements, or during any appeal process, except as permitted by Paragraph 16.04, or as Owner and Contractor may otherwise agree in writing.

4.05 *Delays in Contractor's Progress*

A. If Owner, Engineer, or anyone for whom Owner is responsible, delays, disrupts, or interferes with the performance or progress of the Work, then Contractor shall be entitled to an equitable adjustment in Contract Price or Contract Times.

B. Contractor shall not be entitled to an adjustment in Contract Price or Contract Times for delay, disruption, or interference caused by or within the control of Contractor. Delay, disruption, and interference attributable to and within the control of a Subcontractor or Supplier shall be deemed to be within the control of Contractor.

C. If Contractor's performance or progress is delayed, disrupted, or interfered with by unanticipated causes not the fault of and beyond the control of Owner, Contractor, and those for which they are responsible, then Contractor shall be entitled to an equitable adjustment in Contract Times. Such an adjustment will be Contractor's sole and exclusive remedy for the delays, disruption, and interference described in this paragraph. Causes of delay, disruption, or interference that may give rise to an adjustment in Contract Times under this paragraph include but are not limited to the following:

1. Severe and unavoidable natural catastrophes such as fires, floods, epidemics, and earthquakes;

2. Abnormal weather conditions;

3. Acts or failures to act of third-party utility owners or other third-party entities (other than those third-party utility owners or other third-party entities performing other work at or adjacent to the Site as arranged by or under contract with Owner, as contemplated in Article 8); and

4. Acts of war or terrorism.

Copyright© 2018 National Society of Professional Engineers, American Council of Engineering Companies, and American Society of Civil Engineers. All rights reserved.

D. Contractor's entitlement to an adjustment of Contract Times or Contract Price is limited as follows:

1. Contractor's entitlement to an adjustment of the Contract Times is conditioned on the delay, disruption, or interference adversely affecting an activity on the critical path to completion of the Work, as of the time of the delay, disruption, or interference.

2. Contractor shall not be entitled to an adjustment in Contract Price for any delay, disruption, or interference if such delay is concurrent with a delay, disruption, or interference caused by or within the control of Contractor. Such a concurrent delay by Contractor shall not preclude an adjustment of Contract Times to which Contractor is otherwise entitled.

3. Adjustments of Contract Times or Contract Price are subject to the provisions of Article 11.

E. Each Contractor request or Change Proposal seeking an increase in Contract Times or Contract Price must be supplemented by supporting data that sets forth in detail the following:

1. The circumstances that form the basis for the requested adjustment;

2. The date upon which each cause of delay, disruption, or interference began to affect the progress of the Work;

3. The date upon which each cause of delay, disruption, or interference ceased to affect the progress of the Work;

4. The number of days' increase in Contract Times claimed as a consequence of each such cause of delay, disruption, or interference; and

5. The impact on Contract Price, in accordance with the provisions of Paragraph 11.07.

Contractor shall also furnish such additional supporting documentation as Owner or Engineer may require including, where appropriate, a revised progress schedule indicating all the activities affected by the delay, disruption, or interference, and an explanation of the effect of the delay, disruption, or interference on the critical path to completion of the Work.

F. Delays, disruption, and interference to the performance or progress of the Work resulting from the existence of a differing subsurface or physical condition, an Underground Facility that was not shown or indicated by the Contract Documents, or not shown or indicated with reasonable accuracy, and those resulting from Hazardous Environmental Conditions, are governed by Article 5, together with the provisions of Paragraphs 4.05.D and 4.05.E.

G. Paragraph 8.03 addresses delays, disruption, and interference to the performance or progress of the Work resulting from the performance of certain other work at or adjacent to the Site.

ARTICLE 5—SITE; SUBSURFACE AND PHYSICAL CONDITIONS; HAZARDOUS ENVIRONMENTAL CONDITIONS

5.01 *Availability of Lands*

A. Owner shall furnish the Site. Owner shall notify Contractor in writing of any encumbrances or restrictions not of general application but specifically related to use of the Site with which Contractor must comply in performing the Work.

Copyright© 2018 National Society of Professional Engineers, American Council of Engineering Companies, and American Society of Civil Engineers. All rights reserved.

B. Upon reasonable written request, Owner shall furnish Contractor with a current statement of record legal title and legal description of the lands upon which permanent improvements are to be made and Owner's interest therein as necessary for giving notice of or filing a mechanic's or construction lien against such lands in accordance with applicable Laws and Regulations.

C. Contractor shall provide for all additional lands and access thereto that may be required for temporary construction facilities or storage of materials and equipment.

5.02 *Use of Site and Other Areas*

A. *Limitation on Use of Site and Other Areas*

1. Contractor shall confine construction equipment, temporary construction facilities, the storage of materials and equipment, and the operations of workers to the Site, adjacent areas that Contractor has arranged to use through construction easements or otherwise, and other adjacent areas permitted by Laws and Regulations, and shall not unreasonably encumber the Site and such other adjacent areas with construction equipment or other materials or equipment. Contractor shall assume full responsibility for (a) damage to the Site; (b) damage to any such other adjacent areas used for Contractor's operations; (c) damage to any other adjacent land or areas, or to improvements, structures, utilities, or similar facilities located at such adjacent lands or areas; and (d) for injuries and losses sustained by the owners or occupants of any such land or areas; provided that such damage or injuries result from the performance of the Work or from other actions or conduct of the Contractor or those for which Contractor is responsible.

2. If a damage or injury claim is made by the owner or occupant of any such land or area because of the performance of the Work, or because of other actions or conduct of the Contractor or those for which Contractor is responsible, Contractor shall (a) take immediate corrective or remedial action as required by Paragraph 7.13, or otherwise; (b) promptly attempt to settle the claim as to all parties through negotiations with such owner or occupant, or otherwise resolve the claim by arbitration or other dispute resolution proceeding, or in a court of competent jurisdiction; and (c) to the fullest extent permitted by Laws and Regulations, indemnify and hold harmless Owner and Engineer, and the officers, directors, members, partners, employees, agents, consultants and subcontractors of each and any of them, from and against any such claim, and against all costs, losses, and damages (including but not limited to all fees and charges of engineers, architects, attorneys, and other professionals and all court or arbitration or other dispute resolution costs) arising out of or relating to any claim or action, legal or equitable, brought by any such owner or occupant against Owner, Engineer, or any other party indemnified hereunder to the extent caused directly or indirectly, in whole or in part by, or based upon, Contractor's performance of the Work, or because of other actions or conduct of the Contractor or those for which Contractor is responsible.

B. *Removal of Debris During Performance of the Work*: During the progress of the Work the Contractor shall keep the Site and other adjacent areas free from accumulations of waste materials, rubbish, and other debris. Removal and disposal of such waste materials, rubbish, and other debris will conform to applicable Laws and Regulations.

C. *Cleaning*: Prior to Substantial Completion of the Work Contractor shall clean the Site and the Work and make it ready for utilization by Owner. At the completion of the Work Contractor shall remove from the Site and adjacent areas all tools, appliances, construction equipment

Copyright© 2018 National Society of Professional Engineers, American Council of Engineering Companies, and American Society of Civil Engineers. All rights reserved.

and machinery, and surplus materials and shall restore to original condition all property not designated for alteration by the Contract Documents.

D. *Loading of Structures*: Contractor shall not load nor permit any part of any structure to be loaded in any manner that will endanger the structure, nor shall Contractor subject any part of the Work or adjacent structures or land to stresses or pressures that will endanger them.

5.03 *Subsurface and Physical Conditions*

A. *Reports and Drawings*: The Supplementary Conditions identify:

1. Those reports of explorations and tests of subsurface conditions at or adjacent to the Site that contain Technical Data;

2. Those drawings of existing physical conditions at or adjacent to the Site, including those drawings depicting existing surface or subsurface structures at or adjacent to the Site (except Underground Facilities), that contain Technical Data; and

3. Technical Data contained in such reports and drawings.

B. *Underground Facilities*: Underground Facilities are shown or indicated on the Drawings, pursuant to Paragraph 5.05, and not in the drawings referred to in Paragraph 5.03.A. Information and data regarding the presence or location of Underground Facilities are not intended to be categorized, identified, or defined as Technical Data.

C. *Reliance by Contractor on Technical Data*: Contractor may rely upon the accuracy of the Technical Data expressly identified in the Supplementary Conditions with respect to such reports and drawings, but such reports and drawings are not Contract Documents. If no such express identification has been made, then Contractor may rely upon the accuracy of the Technical Data as defined in Paragraph 1.01.A.46.b.

D. *Limitations of Other Data and Documents*: Except for such reliance on Technical Data, Contractor may not rely upon or make any claim against Owner or Engineer, or any of their officers, directors, members, partners, employees, agents, consultants, or subcontractors, with respect to:

1. the completeness of such reports and drawings for Contractor's purposes, including, but not limited to, any aspects of the means, methods, techniques, sequences, and procedures of construction to be employed by Contractor, and safety precautions and programs incident thereto;

2. other data, interpretations, opinions, and information contained in such reports or shown or indicated in such drawings;

3. the contents of other Site-related documents made available to Contractor, such as record drawings from other projects at or adjacent to the Site, or Owner's archival documents concerning the Site; or

4. any Contractor interpretation of or conclusion drawn from any Technical Data or any such other data, interpretations, opinions, or information.

Copyright© 2018 National Society of Professional Engineers, American Council of Engineering Companies, and American Society of Civil Engineers. All rights reserved.

5.04 *Differing Subsurface or Physical Conditions*

A. *Notice by Contractor*: If Contractor believes that any subsurface or physical condition that is uncovered or revealed at the Site:

1. is of such a nature as to establish that any Technical Data on which Contractor is entitled to rely as provided in Paragraph 5.03 is materially inaccurate;

2. is of such a nature as to require a change in the Drawings or Specifications;

3. differs materially from that shown or indicated in the Contract Documents; or

4. is of an unusual nature, and differs materially from conditions ordinarily encountered and generally recognized as inherent in work of the character provided for in the Contract Documents;

then Contractor shall, promptly after becoming aware thereof and before further disturbing the subsurface or physical conditions or performing any Work in connection therewith (except in an emergency as required by Paragraph 7.15), notify Owner and Engineer in writing about such condition. Contractor shall not further disturb such condition or perform any Work in connection therewith (except with respect to an emergency) until receipt of a written statement permitting Contractor to do so.

B. *Engineer's Review*: After receipt of written notice as required by the preceding paragraph, Engineer will promptly review the subsurface or physical condition in question; determine whether it is necessary for Owner to obtain additional exploration or tests with respect to the condition; conclude whether the condition falls within any one or more of the differing site condition categories in Paragraph 5.04.A; obtain any pertinent cost or schedule information from Contractor; prepare recommendations to Owner regarding the Contractor's resumption of Work in connection with the subsurface or physical condition in question and the need for any change in the Drawings or Specifications; and advise Owner in writing of Engineer's findings, conclusions, and recommendations.

C. *Owner's Statement to Contractor Regarding Site Condition*: After receipt of Engineer's written findings, conclusions, and recommendations, Owner shall issue a written statement to Contractor (with a copy to Engineer) regarding the subsurface or physical condition in question, addressing the resumption of Work in connection with such condition, indicating whether any change in the Drawings or Specifications will be made, and adopting or rejecting Engineer's written findings, conclusions, and recommendations, in whole or in part.

D. *Early Resumption of Work*: If at any time Engineer determines that Work in connection with the subsurface or physical condition in question may resume prior to completion of Engineer's review or Owner's issuance of its statement to Contractor, because the condition in question has been adequately documented, and analyzed on a preliminary basis, then the Engineer may at its discretion instruct Contractor to resume such Work.

Copyright© 2018 National Society of Professional Engineers, American Council of Engineering Companies, and American Society of Civil Engineers. All rights reserved.

E. *Possible Price and Times Adjustments*

1. Contractor shall be entitled to an equitable adjustment in Contract Price or Contract Times, to the extent that the existence of a differing subsurface or physical condition, or any related delay, disruption, or interference, causes an increase or decrease in Contractor's cost of, or time required for, performance of the Work; subject, however, to the following:

    a. Such condition must fall within any one or more of the categories described in Paragraph 5.04.A;

    b. With respect to Work that is paid for on a unit price basis, any adjustment in Contract Price will be subject to the provisions of Paragraph 13.03; and,

    c. Contractor's entitlement to an adjustment of the Contract Times is subject to the provisions of Paragraphs 4.05.D and 4.05.E.

2. Contractor shall not be entitled to any adjustment in the Contract Price or Contract Times with respect to a subsurface or physical condition if:

    a. Contractor knew of the existence of such condition at the time Contractor made a commitment to Owner with respect to Contract Price and Contract Times by the submission of a Bid or becoming bound under a negotiated contract, or otherwise;

    b. The existence of such condition reasonably could have been discovered or revealed as a result of any examination, investigation, exploration, test, or study of the Site and contiguous areas expressly required by the Bidding Requirements or Contract Documents to be conducted by or for Contractor prior to Contractor's making such commitment; or

    c. Contractor failed to give the written notice required by Paragraph 5.04.A.

3. If Owner and Contractor agree regarding Contractor's entitlement to and the amount or extent of any adjustment in the Contract Price or Contract Times, then any such adjustment will be set forth in a Change Order.

4. Contractor may submit a Change Proposal regarding its entitlement to or the amount or extent of any adjustment in the Contract Price or Contract Times, no later than 30 days after Owner's issuance of the Owner's written statement to Contractor regarding the subsurface or physical condition in question.

F. *Underground Facilities; Hazardous Environmental Conditions*: Paragraph 5.05 governs rights and responsibilities regarding the presence or location of Underground Facilities. Paragraph 5.06 governs rights and responsibilities regarding Hazardous Environmental Conditions. The provisions of Paragraphs 5.03 and 5.04 are not applicable to the presence or location of Underground Facilities, or to Hazardous Environmental Conditions.

5.05 *Underground Facilities*

A. *Contractor's Responsibilities*: Unless it is otherwise expressly provided in the Supplementary Conditions, the cost of all of the following are included in the Contract Price, and Contractor shall have full responsibility for:

1. reviewing and checking all information and data regarding existing Underground Facilities at the Site;

Copyright© 2018 National Society of Professional Engineers, American Council of Engineering Companies, and American Society of Civil Engineers. All rights reserved.

2. complying with applicable state and local utility damage prevention Laws and Regulations;

3. verifying the actual location of those Underground Facilities shown or indicated in the Contract Documents as being within the area affected by the Work, by exposing such Underground Facilities during the course of construction;

4. coordination of the Work with the owners (including Owner) of such Underground Facilities, during construction; and

5. the safety and protection of all existing Underground Facilities at the Site, and repairing any damage thereto resulting from the Work.

B. *Notice by Contractor*: If Contractor believes that an Underground Facility that is uncovered or revealed at the Site was not shown or indicated on the Drawings, or was not shown or indicated on the Drawings with reasonable accuracy, then Contractor shall, promptly after becoming aware thereof and before further disturbing conditions affected thereby or performing any Work in connection therewith (except in an emergency as required by Paragraph 7.15), notify Owner and Engineer in writing regarding such Underground Facility.

C. *Engineer's Review*: Engineer will:

1. promptly review the Underground Facility and conclude whether such Underground Facility was not shown or indicated on the Drawings, or was not shown or indicated with reasonable accuracy;

2. identify and communicate with the owner of the Underground Facility; prepare recommendations to Owner (and if necessary issue any preliminary instructions to Contractor) regarding the Contractor's resumption of Work in connection with the Underground Facility in question;

3. obtain any pertinent cost or schedule information from Contractor; determine the extent, if any, to which a change is required in the Drawings or Specifications to reflect and document the consequences of the existence or location of the Underground Facility; and

4. advise Owner in writing of Engineer's findings, conclusions, and recommendations.

During such time, Contractor shall be responsible for the safety and protection of such Underground Facility.

D. *Owner's Statement to Contractor Regarding Underground Facility*: After receipt of Engineer's written findings, conclusions, and recommendations, Owner shall issue a written statement to Contractor (with a copy to Engineer) regarding the Underground Facility in question addressing the resumption of Work in connection with such Underground Facility, indicating whether any change in the Drawings or Specifications will be made, and adopting or rejecting Engineer's written findings, conclusions, and recommendations in whole or in part.

E. *Early Resumption of Work*: If at any time Engineer determines that Work in connection with the Underground Facility may resume prior to completion of Engineer's review or Owner's issuance of its statement to Contractor, because the Underground Facility in question and conditions affected by its presence have been adequately documented, and analyzed on a preliminary basis, then the Engineer may at its discretion instruct Contractor to resume such Work.

Copyright© 2018 National Society of Professional Engineers, American Council of Engineering Companies, and American Society of Civil Engineers. All rights reserved.

F. *Possible Price and Times Adjustments*

1. Contractor shall be entitled to an equitable adjustment in the Contract Price or Contract Times, to the extent that any existing Underground Facility at the Site that was not shown or indicated on the Drawings, or was not shown or indicated with reasonable accuracy, or any related delay, disruption, or interference, causes an increase or decrease in Contractor's cost of, or time required for, performance of the Work; subject, however, to the following:

    a. With respect to Work that is paid for on a unit price basis, any adjustment in Contract Price will be subject to the provisions of Paragraph 13.03;

    b. Contractor's entitlement to an adjustment of the Contract Times is subject to the provisions of Paragraphs 4.05.D and 4.05.E; and

    c. Contractor gave the notice required in Paragraph 5.05.B.

2. If Owner and Contractor agree regarding Contractor's entitlement to and the amount or extent of any adjustment in the Contract Price or Contract Times, then any such adjustment will be set forth in a Change Order.

3. Contractor may submit a Change Proposal regarding its entitlement to or the amount or extent of any adjustment in the Contract Price or Contract Times, no later than 30 days after Owner's issuance of the Owner's written statement to Contractor regarding the Underground Facility in question.

4. The information and data shown or indicated on the Drawings with respect to existing Underground Facilities at the Site is based on information and data (a) furnished by the owners of such Underground Facilities, or by others, (b) obtained from available records, or (c) gathered in an investigation conducted in accordance with the current edition of ASCE 38, Standard Guideline for the Collection and Depiction of Existing Subsurface Utility Data, by the American Society of Civil Engineers. If such information or data is incorrect or incomplete, Contractor's remedies are limited to those set forth in this Paragraph 5.05.F.

5.06 *Hazardous Environmental Conditions at Site*

A. *Reports and Drawings*: The Supplementary Conditions identify:

1. those reports known to Owner relating to Hazardous Environmental Conditions that have been identified at or adjacent to the Site;

2. drawings known to Owner relating to Hazardous Environmental Conditions that have been identified at or adjacent to the Site; and

3. Technical Data contained in such reports and drawings.

Copyright© 2018 National Society of Professional Engineers, American Council of Engineering Companies, and American Society of Civil Engineers. All rights reserved.

B. *Reliance by Contractor on Technical Data Authorized*: Contractor may rely upon the accuracy of the Technical Data expressly identified in the Supplementary Conditions with respect to such reports and drawings, but such reports and drawings are not Contract Documents. If no such express identification has been made, then Contractor may rely on the accuracy of the Technical Data as defined in Paragraph 1.01.A.46.b. Except for such reliance on Technical Data, Contractor may not rely upon or make any claim against Owner or Engineer, or any of their officers, directors, members, partners, employees, agents, consultants, or subcontractors, with respect to:

1. the completeness of such reports and drawings for Contractor's purposes, including, but not limited to, any aspects of the means, methods, techniques, sequences and procedures of construction to be employed by Contractor, and safety precautions and programs incident thereto;

2. other data, interpretations, opinions, and information contained in such reports or shown or indicated in such drawings; or

3. any Contractor interpretation of or conclusion drawn from any Technical Data or any such other data, interpretations, opinions or information.

C. Contractor shall not be responsible for removing or remediating any Hazardous Environmental Condition encountered, uncovered, or revealed at the Site unless such removal or remediation is expressly identified in the Contract Documents to be within the scope of the Work.

D. Contractor shall be responsible for controlling, containing, and duly removing all Constituents of Concern brought to the Site by Contractor, Subcontractors, Suppliers, or anyone else for whom Contractor is responsible, and for any associated costs; and for the costs of removing and remediating any Hazardous Environmental Condition created by the presence of any such Constituents of Concern.

E. If Contractor encounters, uncovers, or reveals a Hazardous Environmental Condition whose removal or remediation is not expressly identified in the Contract Documents as being within the scope of the Work, or if Contractor or anyone for whom Contractor is responsible creates a Hazardous Environmental Condition, then Contractor shall immediately: (1) secure or otherwise isolate such condition; (2) stop all Work in connection with such condition and in any area affected thereby (except in an emergency as required by Paragraph 7.15); and (3) notify Owner and Engineer (and promptly thereafter confirm such notice in writing). Owner shall promptly consult with Engineer concerning the necessity for Owner to retain a qualified expert to evaluate such condition or take corrective action, if any. Promptly after consulting with Engineer, Owner shall take such actions as are necessary to permit Owner to timely obtain required permits and provide Contractor the written notice required by Paragraph 5.06.F. If Contractor or anyone for whom Contractor is responsible created the Hazardous Environmental Condition in question, then Owner may remove and remediate the Hazardous Environmental Condition, and impose a set-off against payments to account for the associated costs.

F. Contractor shall not resume Work in connection with such Hazardous Environmental Condition or in any affected area until after Owner has obtained any required permits related thereto, and delivered written notice to Contractor either (1) specifying that such condition

Copyright© 2018 National Society of Professional Engineers, American Council of Engineering Companies, and American Society of Civil Engineers. All rights reserved.

and any affected area is or has been rendered safe for the resumption of Work, or (2) specifying any special conditions under which such Work may be resumed safely.

G. If Owner and Contractor cannot agree as to entitlement to or on the amount or extent, if any, of any adjustment in Contract Price or Contract Times, as a result of such Work stoppage, such special conditions under which Work is agreed to be resumed by Contractor, or any costs or expenses incurred in response to the Hazardous Environmental Condition, then within 30 days of Owner's written notice regarding the resumption of Work, Contractor may submit a Change Proposal, or Owner may impose a set-off. Entitlement to any such adjustment is subject to the provisions of Paragraphs 4.05.D, 4.05.E, 11.07, and 11.08.

H. If, after receipt of such written notice, Contractor does not agree to resume such Work based on a reasonable belief it is unsafe, or does not agree to resume such Work under such special conditions, then Owner may order the portion of the Work that is in the area affected by such condition to be deleted from the Work, following the contractual change procedures in Article 11. Owner may have such deleted portion of the Work performed by Owner's own forces or others in accordance with Article 8.

I. To the fullest extent permitted by Laws and Regulations, Owner shall indemnify and hold harmless Contractor, Subcontractors, and Engineer, and the officers, directors, members, partners, employees, agents, consultants, and subcontractors of each and any of them, from and against all claims, costs, losses, and damages (including but not limited to all fees and charges of engineers, architects, attorneys, and other professionals, and all court, arbitration, or other dispute resolution costs) arising out of or relating to a Hazardous Environmental Condition, provided that such Hazardous Environmental Condition (1) was not shown or indicated in the Drawings, Specifications, or other Contract Documents, identified as Technical Data entitled to limited reliance pursuant to Paragraph 5.06.B, or identified in the Contract Documents to be included within the scope of the Work, and (2) was not created by Contractor or by anyone for whom Contractor is responsible. Nothing in this Paragraph 5.06.I obligates Owner to indemnify any individual or entity from and against the consequences of that individual's or entity's own negligence.

J. To the fullest extent permitted by Laws and Regulations, Contractor shall indemnify and hold harmless Owner and Engineer, and the officers, directors, members, partners, employees, agents, consultants, and subcontractors of each and any of them, from and against all claims, costs, losses, and damages (including but not limited to all fees and charges of engineers, architects, attorneys, and other professionals and all court or arbitration or other dispute resolution costs) arising out of or relating to the failure to control, contain, or remove a Constituent of Concern brought to the Site by Contractor or by anyone for whom Contractor is responsible, or to a Hazardous Environmental Condition created by Contractor or by anyone for whom Contractor is responsible. Nothing in this Paragraph 5.06.J obligates Contractor to indemnify any individual or entity from and against the consequences of that individual's or entity's own negligence.

K. The provisions of Paragraphs 5.03, 5.04, and 5.05 do not apply to the presence of Constituents of Concern or to a Hazardous Environmental Condition uncovered or revealed at the Site.

Copyright© 2018 National Society of Professional Engineers, American Council of Engineering Companies, and American Society of Civil Engineers. All rights reserved.

ARTICLE 6—BONDS AND INSURANCE

6.01 *Performance, Payment, and Other Bonds*

A. Contractor shall furnish a performance bond and a payment bond, each in an amount at least equal to the Contract Price, as security for the faithful performance and payment of Contractor's obligations under the Contract. These bonds must remain in effect until one year after the date when final payment becomes due or until completion of the correction period specified in Paragraph 15.08, whichever is later, except as provided otherwise by Laws or Regulations, the terms of a prescribed bond form, the Supplementary Conditions, or other provisions of the Contract.

B. Contractor shall also furnish such other bonds (if any) as are required by the Supplementary Conditions or other provisions of the Contract.

C. All bonds must be in the form included in the Bidding Documents or otherwise specified by Owner prior to execution of the Contract, except as provided otherwise by Laws or Regulations, and must be issued and signed by a surety named in "Companies Holding Certificates of Authority as Acceptable Sureties on Federal Bonds and as Acceptable Reinsuring Companies" as published in Department Circular 570 (as amended and supplemented) by the Bureau of the Fiscal Service, U.S. Department of the Treasury. A bond signed by an agent or attorney-in-fact must be accompanied by a certified copy of that individual's authority to bind the surety. The evidence of authority must show that it is effective on the date the agent or attorney-in-fact signed the accompanying bond.

D. Contractor shall obtain the required bonds from surety companies that are duly licensed or authorized, in the state or jurisdiction in which the Project is located, to issue bonds in the required amounts.

E. If the surety on a bond furnished by Contractor is declared bankrupt or becomes insolvent, or the surety ceases to meet the requirements above, then Contractor shall promptly notify Owner and Engineer in writing and shall, within 20 days after the event giving rise to such notification, provide another bond and surety, both of which must comply with the bond and surety requirements above.

F. If Contractor has failed to obtain a required bond, Owner may exclude the Contractor from the Site and exercise Owner's termination rights under Article 16.

G. Upon request to Owner from any Subcontractor, Supplier, or other person or entity claiming to have furnished labor, services, materials, or equipment used in the performance of the Work, Owner shall provide a copy of the payment bond to such person or entity.

H. Upon request to Contractor from any Subcontractor, Supplier, or other person or entity claiming to have furnished labor, services, materials, or equipment used in the performance of the Work, Contractor shall provide a copy of the payment bond to such person or entity.

6.02 *Insurance—General Provisions*

A. Owner and Contractor shall obtain and maintain insurance as required in this article and in the Supplementary Conditions.

B. All insurance required by the Contract to be purchased and maintained by Owner or Contractor shall be obtained from insurance companies that are duly licensed or authorized in the state or jurisdiction in which the Project is located to issue insurance policies for the

Copyright© 2018 National Society of Professional Engineers, American Council of Engineering Companies, and American Society of Civil Engineers. All rights reserved.

required limits and coverages. Unless a different standard is indicated in the Supplementary Conditions, all companies that provide insurance policies required under this Contract shall have an A.M. Best rating of A-VII or better.

C. Alternative forms of insurance coverage, including but not limited to self-insurance and "Occupational Accident and Excess Employer's Indemnity Policies," are not sufficient to meet the insurance requirements of this Contract, unless expressly allowed in the Supplementary Conditions.

D. Contractor shall deliver to Owner, with copies to each additional insured identified in the Contract, certificates of insurance and endorsements establishing that Contractor has obtained and is maintaining the policies and coverages required by the Contract. Upon request by Owner or any other insured, Contractor shall also furnish other evidence of such required insurance, including but not limited to copies of policies, documentation of applicable self-insured retentions (if allowed) and deductibles, full disclosure of all relevant exclusions, and evidence of insurance required to be purchased and maintained by Subcontractors or Suppliers. In any documentation furnished under this provision, Contractor, Subcontractors, and Suppliers may block out (redact) (1) any confidential premium or pricing information and (2) any wording specific to a project or jurisdiction other than those applicable to this Contract.

E. Owner shall deliver to Contractor, with copies to each additional insured identified in the Contract, certificates of insurance and endorsements establishing that Owner has obtained and is maintaining the policies and coverages required of Owner by the Contract (if any). Upon request by Contractor or any other insured, Owner shall also provide other evidence of such required insurance (if any), including but not limited to copies of policies, documentation of applicable self-insured retentions (if allowed) and deductibles, and full disclosure of all relevant exclusions. In any documentation furnished under this provision, Owner may block out (redact) (1) any confidential premium or pricing information and (2) any wording specific to a project or jurisdiction other than those relevant to this Contract.

F. Failure of Owner or Contractor to demand such certificates or other evidence of the other party's full compliance with these insurance requirements, or failure of Owner or Contractor to identify a deficiency in compliance from the evidence provided, will not be construed as a waiver of the other party's obligation to obtain and maintain such insurance.

G. In addition to the liability insurance required to be provided by Contractor, the Owner, at Owner's option, may purchase and maintain Owner's own liability insurance. Owner's liability policies, if any, operate separately and independently from policies required to be provided by Contractor, and Contractor cannot rely upon Owner's liability policies for any of Contractor's obligations to the Owner, Engineer, or third parties.

H. Contractor shall require:

1. Subcontractors to purchase and maintain worker's compensation, commercial general liability, and other insurance that is appropriate for their participation in the Project, and to name as additional insureds Owner and Engineer (and any other individuals or entities identified in the Supplementary Conditions as additional insureds on Contractor's liability policies) on each Subcontractor's commercial general liability insurance policy; and

2. Suppliers to purchase and maintain insurance that is appropriate for their participation in the Project.

Copyright© 2018 National Society of Professional Engineers, American Council of Engineering Companies, and American Society of Civil Engineers. All rights reserved.

I. If either party does not purchase or maintain the insurance required of such party by the Contract, such party shall notify the other party in writing of such failure to purchase prior to the start of the Work, or of such failure to maintain prior to any change in the required coverage.

J. If Contractor has failed to obtain and maintain required insurance, Contractor's entitlement to enter or remain at the Site will end immediately, and Owner may impose an appropriate set-off against payment for any associated costs (including but not limited to the cost of purchasing necessary insurance coverage), and exercise Owner's termination rights under Article 16.

K. Without prejudice to any other right or remedy, if a party has failed to obtain required insurance, the other party may elect (but is in no way obligated) to obtain equivalent insurance to protect such other party's interests at the expense of the party who was required to provide such coverage, and the Contract Price will be adjusted accordingly.

L. Owner does not represent that insurance coverage and limits established in this Contract necessarily will be adequate to protect Contractor or Contractor's interests. Contractor is responsible for determining whether such coverage and limits are adequate to protect its interests, and for obtaining and maintaining any additional insurance that Contractor deems necessary.

M. The insurance and insurance limits required herein will not be deemed as a limitation on Contractor's liability, or that of its Subcontractors or Suppliers, under the indemnities granted to Owner and other individuals and entities in the Contract or otherwise.

N. All the policies of insurance required to be purchased and maintained under this Contract will contain a provision or endorsement that the coverage afforded will not be canceled, or renewal refused, until at least 10 days prior written notice has been given to the purchasing policyholder. Within three days of receipt of any such written notice, the purchasing policyholder shall provide a copy of the notice to each other insured and Engineer.

6.03 *Contractor's Insurance*

A. *Required Insurance*: Contractor shall purchase and maintain Worker's Compensation, Commercial General Liability, and other insurance pursuant to the specific requirements of the Supplementary Conditions.

B. *General Provisions*: The policies of insurance required by this Paragraph 6.03 as supplemented must:

1. include at least the specific coverages required;

2. be written for not less than the limits provided, or those required by Laws or Regulations, whichever is greater;

3. remain in effect at least until the Work is complete (as set forth in Paragraph 15.06.D), and longer if expressly required elsewhere in this Contract, and at all times thereafter when Contractor may be correcting, removing, or replacing defective Work as a warranty or correction obligation, or otherwise, or returning to the Site to conduct other tasks arising from the Contract;

4. apply with respect to the performance of the Work, whether such performance is by Contractor, any Subcontractor or Supplier, or by anyone directly or indirectly employed

Copyright© 2018 National Society of Professional Engineers, American Council of Engineering Companies, and American Society of Civil Engineers. All rights reserved.

by any of them to perform any of the Work, or by anyone for whose acts any of them may be liable; and

5. include all necessary endorsements to support the stated requirements.

C. *Additional Insureds*: The Contractor's commercial general liability, automobile liability, employer's liability, umbrella or excess, pollution liability, and unmanned aerial vehicle liability policies, if required by this Contract, must:

1. include and list as additional insureds Owner and Engineer, and any individuals or entities identified as additional insureds in the Supplementary Conditions;

2. include coverage for the respective officers, directors, members, partners, employees, and consultants of all such additional insureds;

3. afford primary coverage to these additional insureds for all claims covered thereby (including as applicable those arising from both ongoing and completed operations);

4. not seek contribution from insurance maintained by the additional insured; and

5. as to commercial general liability insurance, apply to additional insureds with respect to liability caused in whole or in part by Contractor's acts or omissions, or the acts and omissions of those working on Contractor's behalf, in the performance of Contractor's operations.

6.04 *Builder's Risk and Other Property Insurance*

A. *Builder's Risk*: Unless otherwise provided in the Supplementary Conditions, Contractor shall purchase and maintain builder's risk insurance upon the Work on a completed value basis, in the amount of the Work's full insurable replacement cost (subject to such deductible amounts as may be provided in the Supplementary Conditions or required by Laws and Regulations). The specific requirements applicable to the builder's risk insurance are set forth in the Supplementary Conditions.

B. *Property Insurance for Facilities of Owner Where Work Will Occur*: Owner is responsible for obtaining and maintaining property insurance covering each existing structure, building, or facility in which any part of the Work will occur, or to which any part of the Work will attach or be adjoined. Such property insurance will be written on a special perils (all-risk) form, on a replacement cost basis, providing coverage consistent with that required for the builder's risk insurance, and will be maintained until the Work is complete, as set forth in Paragraph 15.06.D.

C. *Property Insurance for Substantially Complete Facilities*: Promptly after Substantial Completion, and before actual occupancy or use of the substantially completed Work, Owner will obtain property insurance for such substantially completed Work, and maintain such property insurance at least until the Work is complete, as set forth in Paragraph 15.06.D. Such property insurance will be written on a special perils (all-risk) form, on a replacement cost basis, and provide coverage consistent with that required for the builder's risk insurance. The builder's risk insurance may terminate upon written confirmation of Owner's procurement of such property insurance.

D. *Partial Occupancy or Use by Owner*: If Owner will occupy or use a portion or portions of the Work prior to Substantial Completion of all the Work, as provided in Paragraph 15.04, then Owner (directly, if it is the purchaser of the builder's risk policy, or through Contractor) will

Copyright© 2018 National Society of Professional Engineers, American Council of Engineering Companies, and American Society of Civil Engineers. All rights reserved.

provide advance notice of such occupancy or use to the builder's risk insurer, and obtain an endorsement consenting to the continuation of coverage prior to commencing such partial occupancy or use.

E. *Insurance of Other Property; Additional Insurance*: If the express insurance provisions of the Contract do not require or address the insurance of a property item or interest, then the entity or individual owning such property item will be responsible for insuring it. If Contractor elects to obtain other special insurance to be included in or supplement the builder's risk or property insurance policies provided under this Paragraph 6.04, it may do so at Contractor's expense.

6.05 *Property Losses; Subrogation*

A. The builder's risk insurance policy purchased and maintained in accordance with Paragraph 6.04 (or an installation floater policy if authorized by the Supplementary Conditions), will contain provisions to the effect that in the event of payment of any loss or damage the insurer will have no rights of recovery against any insureds thereunder, or against Engineer or its consultants, or their officers, directors, members, partners, employees, agents, consultants, or subcontractors.

1. Owner and Contractor waive all rights against each other and the respective officers, directors, members, partners, employees, agents, consultants, and subcontractors of each and any of them, for all losses and damages caused by, arising out of, or resulting from any of the perils, risks, or causes of loss covered by such policies and any other property insurance applicable to the Work; and, in addition, waive all such rights against Engineer, its consultants, all individuals or entities identified in the Supplementary Conditions as builder's risk or installation floater insureds, and the officers, directors, members, partners, employees, agents, consultants, and subcontractors of each and any of them, under such policies for losses and damages so caused.

2. None of the above waivers extends to the rights that any party making such waiver may have to the proceeds of insurance held by Owner or Contractor as trustee or fiduciary, or otherwise payable under any policy so issued.

B. Any property insurance policy maintained by Owner covering any loss, damage, or consequential loss to Owner's existing structures, buildings, or facilities in which any part of the Work will occur, or to which any part of the Work will attach or adjoin; to adjacent structures, buildings, or facilities of Owner; or to part or all of the completed or substantially completed Work, during partial occupancy or use pursuant to Paragraph 15.04, after Substantial Completion pursuant to Paragraph 15.03, or after final payment pursuant to Paragraph 15.06, will contain provisions to the effect that in the event of payment of any loss or damage the insurer will have no rights of recovery against any insureds thereunder, or against Contractor, Subcontractors, or Engineer, or the officers, directors, members, partners, employees, agents, consultants, or subcontractors of each and any of them, and that the insured is allowed to waive the insurer's rights of subrogation in a written contract executed prior to the loss, damage, or consequential loss.

1. Owner waives all rights against Contractor, Subcontractors, and Engineer, and the officers, directors, members, partners, employees, agents, consultants and subcontractors of each and any of them, for all losses and damages caused by, arising out of, or resulting from fire or any of the perils, risks, or causes of loss covered by such policies.

Copyright© 2018 National Society of Professional Engineers, American Council of Engineering Companies, and American Society of Civil Engineers. All rights reserved.

C. The waivers in this Paragraph 6.05 include the waiver of rights due to business interruption, loss of use, or other consequential loss extending beyond direct physical loss or damage to Owner's property or the Work caused by, arising out of, or resulting from fire or other insured peril, risk, or cause of loss.

D. Contractor shall be responsible for assuring that each Subcontract contains provisions whereby the Subcontractor waives all rights against Owner, Contractor, all individuals or entities identified in the Supplementary Conditions as insureds, the Engineer and its consultants, and the officers, directors, members, partners, employees, agents, consultants, and subcontractors of each and any of them, for all losses and damages caused by, arising out of, relating to, or resulting from fire or other peril, risk, or cause of loss covered by builder's risk insurance, installation floater, and any other property insurance applicable to the Work.

6.06 *Receipt and Application of Property Insurance Proceeds*

A. Any insured loss under the builder's risk and other policies of property insurance required by Paragraph 6.04 will be adjusted and settled with the named insured that purchased the policy. Such named insured shall act as fiduciary for the other insureds, and give notice to such other insureds that adjustment and settlement of a claim is in progress. Any other insured may state its position regarding a claim for insured loss in writing within 15 days after notice of such claim.

B. Proceeds for such insured losses may be made payable by the insurer either jointly to multiple insureds, or to the named insured that purchased the policy in its own right and as fiduciary for other insureds, subject to the requirements of any applicable mortgage clause. A named insured receiving insurance proceeds under the builder's risk and other policies of insurance required by Paragraph 6.04 shall maintain such proceeds in a segregated account, and distribute such proceeds in accordance with such agreement as the parties in interest may reach, or as otherwise required under the dispute resolution provisions of this Contract or applicable Laws and Regulations.

C. If no other special agreement is reached, Contractor shall repair or replace the damaged Work, using allocated insurance proceeds.

ARTICLE 7—CONTRACTOR'S RESPONSIBILITIES

7.01 *Contractor's Means and Methods of Construction*

A. Contractor shall be solely responsible for the means, methods, techniques, sequences, and procedures of construction.

B. If the Contract Documents note, or Contractor determines, that professional engineering or other design services are needed to carry out Contractor's responsibilities for construction means, methods, techniques, sequences, and procedures, or for Site safety, then Contractor shall cause such services to be provided by a properly licensed design professional, at Contractor's expense. Such services are not Owner-delegated professional design services under this Contract, and neither Owner nor Engineer has any responsibility with respect to (1) Contractor's determination of the need for such services, (2) the qualifications or licensing of the design professionals retained or employed by Contractor, (3) the performance of such services, or (4) any errors, omissions, or defects in such services.

Copyright© 2018 National Society of Professional Engineers, American Council of Engineering Companies, and American Society of Civil Engineers. All rights reserved.

7.02 *Supervision and Superintendence*

A. Contractor shall supervise, inspect, and direct the Work competently and efficiently, devoting such attention thereto and applying such skills and expertise as may be necessary to perform the Work in accordance with the Contract Documents.

B. At all times during the progress of the Work, Contractor shall assign a competent resident superintendent who will not be replaced without written notice to Owner and Engineer except under extraordinary circumstances.

7.03 *Labor; Working Hours*

A. Contractor shall provide competent, suitably qualified personnel to survey and lay out the Work and perform construction as required by the Contract Documents. Contractor shall maintain good discipline and order at the Site.

B. Contractor shall be fully responsible to Owner and Engineer for all acts and omissions of Contractor's employees; of Suppliers and Subcontractors, and their employees; and of any other individuals or entities performing or furnishing any of the Work, just as Contractor is responsible for Contractor's own acts and omissions.

C. Except as otherwise required for the safety or protection of persons or the Work or property at the Site or adjacent thereto, and except as otherwise stated in the Contract Documents, all Work at the Site will be performed during regular working hours, Monday through Friday. Contractor will not perform Work on a Saturday, Sunday, or any legal holiday. Contractor may perform Work outside regular working hours or on Saturdays, Sundays, or legal holidays only with Owner's written consent, which will not be unreasonably withheld.

7.04 *Services, Materials, and Equipment*

A. Unless otherwise specified in the Contract Documents, Contractor shall provide and assume full responsibility for all services, materials, equipment, labor, transportation, construction equipment and machinery, tools, appliances, fuel, power, light, heat, telephone, water, sanitary facilities, temporary facilities, and all other facilities and incidentals necessary for the performance, testing, start up, and completion of the Work, whether or not such items are specifically called for in the Contract Documents.

B. All materials and equipment incorporated into the Work must be new and of good quality, except as otherwise provided in the Contract Documents. All special warranties and guarantees required by the Specifications will expressly run to the benefit of Owner. If required by Engineer, Contractor shall furnish satisfactory evidence (including reports of required tests) as to the source, kind, and quality of materials and equipment.

C. All materials and equipment must be stored, applied, installed, connected, erected, protected, used, cleaned, and conditioned in accordance with instructions of the applicable Supplier, except as otherwise may be provided in the Contract Documents.

7.05 *"Or Equals"*

A. *Contractor's Request; Governing Criteria*: Whenever an item of equipment or material is specified or described in the Contract Documents by using the names of one or more proprietary items or specific Suppliers, the Contract Price has been based upon Contractor furnishing such item as specified. The specification or description of such an item is intended to establish the type, function, appearance, and quality required. Unless the specification or

Copyright© 2018 National Society of Professional Engineers, American Council of Engineering Companies, and American Society of Civil Engineers. All rights reserved.

description contains or is followed by words reading that no like, equivalent, or "or equal" item is permitted, Contractor may request that Engineer authorize the use of other items of equipment or material, or items from other proposed Suppliers, under the circumstances described below.

1. If Engineer in its sole discretion determines that an item of equipment or material proposed by Contractor is functionally equal to that named and sufficiently similar so that no change in related Work will be required, Engineer will deem it an "or equal" item. For the purposes of this paragraph, a proposed item of equipment or material will be considered functionally equal to an item so named if:

    a. in the exercise of reasonable judgment Engineer determines that the proposed item:

        1) is at least equal in materials of construction, quality, durability, appearance, strength, and design characteristics;

        2) will reliably perform at least equally well the function and achieve the results imposed by the design concept of the completed Project as a functioning whole;

        3) has a proven record of performance and availability of responsive service; and

        4) is not objectionable to Owner.

    b. Contractor certifies that, if the proposed item is approved and incorporated into the Work:

        1) there will be no increase in cost to the Owner or increase in Contract Times; and

        2) the item will conform substantially to the detailed requirements of the item named in the Contract Documents.

B. *Contractor's Expense*: Contractor shall provide all data in support of any proposed "or equal" item at Contractor's expense.

C. *Engineer's Evaluation and Determination*: Engineer will be allowed a reasonable time to evaluate each "or-equal" request. Engineer may require Contractor to furnish additional data about the proposed "or-equal" item. Engineer will be the sole judge of acceptability. No "or-equal" item will be ordered, furnished, installed, or utilized until Engineer's review is complete and Engineer determines that the proposed item is an "or-equal," which will be evidenced by an approved Shop Drawing or other written communication. Engineer will advise Contractor in writing of any negative determination.

D. *Effect of Engineer's Determination*: Neither approval nor denial of an "or-equal" request will result in any change in Contract Price. The Engineer's denial of an "or-equal" request will be final and binding, and may not be reversed through an appeal under any provision of the Contract.

E. *Treatment as a Substitution Request*: If Engineer determines that an item of equipment or material proposed by Contractor does not qualify as an "or-equal" item, Contractor may request that Engineer consider the item a proposed substitute pursuant to Paragraph 7.06.

7.06 *Substitutes*

A. *Contractor's Request; Governing Criteria*: Unless the specification or description of an item of equipment or material required to be furnished under the Contract Documents contains or is followed by words reading that no substitution is permitted, Contractor may request that

Copyright© 2018 National Society of Professional Engineers, American Council of Engineering Companies, and American Society of Civil Engineers. All rights reserved.

Engineer authorize the use of other items of equipment or material under the circumstances described below. To the extent possible such requests must be made before commencement of related construction at the Site.

1. Contractor shall submit sufficient information as provided below to allow Engineer to determine if the item of material or equipment proposed is functionally equivalent to that named and an acceptable substitute therefor. Engineer will not accept requests for review of proposed substitute items of equipment or material from anyone other than Contractor.
2. The requirements for review by Engineer will be as set forth in Paragraph 7.06.B, as supplemented by the Specifications, and as Engineer may decide is appropriate under the circumstances.
3. Contractor shall make written application to Engineer for review of a proposed substitute item of equipment or material that Contractor seeks to furnish or use. The application:
    a. will certify that the proposed substitute item will:
        1) perform adequately the functions and achieve the results called for by the general design;
        2) be similar in substance to the item specified; and
        3) be suited to the same use as the item specified.
    b. will state:
        1) the extent, if any, to which the use of the proposed substitute item will necessitate a change in Contract Times;
        2) whether use of the proposed substitute item in the Work will require a change in any of the Contract Documents (or in the provisions of any other direct contract with Owner for other work on the Project) to adapt the design to the proposed substitute item; and
        3) whether incorporation or use of the proposed substitute item in connection with the Work is subject to payment of any license fee or royalty.
    c. will identify:
        1) all variations of the proposed substitute item from the item specified; and
        2) available engineering, sales, maintenance, repair, and replacement services.
    d. will contain an itemized estimate of all costs or credits that will result directly or indirectly from use of such substitute item, including but not limited to changes in Contract Price, shared savings, costs of redesign, and claims of other contractors affected by any resulting change.

B. *Engineer's Evaluation and Determination*: Engineer will be allowed a reasonable time to evaluate each substitute request, and to obtain comments and direction from Owner. Engineer may require Contractor to furnish additional data about the proposed substitute item. Engineer will be the sole judge of acceptability. No substitute will be ordered, furnished, installed, or utilized until Engineer's review is complete and Engineer determines that the proposed item is an acceptable substitute. Engineer's determination will be evidenced by a

Copyright© 2018 National Society of Professional Engineers, American Council of Engineering Companies, and American Society of Civil Engineers. All rights reserved.

Field Order or a proposed Change Order accounting for the substitution itself and all related impacts, including changes in Contract Price or Contract Times. Engineer will advise Contractor in writing of any negative determination.

C. *Special Guarantee*: Owner may require Contractor to furnish at Contractor's expense a special performance guarantee or other surety with respect to any substitute.

D. *Reimbursement of Engineer's Cost*: Engineer will record Engineer's costs in evaluating a substitute proposed or submitted by Contractor. Whether or not Engineer approves a substitute so proposed or submitted by Contractor, Contractor shall reimburse Owner for the reasonable charges of Engineer for evaluating each such proposed substitute. Contractor shall also reimburse Owner for the reasonable charges of Engineer for making changes in the Contract Documents (or in the provisions of any other direct contract with Owner) resulting from the acceptance of each proposed substitute.

E. *Contractor's Expense*: Contractor shall provide all data in support of any proposed substitute at Contractor's expense.

F. *Effect of Engineer's Determination*: If Engineer approves the substitution request, Contractor shall execute the proposed Change Order and proceed with the substitution. The Engineer's denial of a substitution request will be final and binding, and may not be reversed through an appeal under any provision of the Contract. Contractor may challenge the scope of reimbursement costs imposed under Paragraph 7.06.D, by timely submittal of a Change Proposal.

7.07 *Concerning Subcontractors and Suppliers*

A. Contractor may retain Subcontractors and Suppliers for the performance of parts of the Work. Such Subcontractors and Suppliers must be acceptable to Owner. The Contractor's retention of a Subcontractor or Supplier for the performance of parts of the Work will not relieve Contractor's obligation to Owner to perform and complete the Work in accordance with the Contract Documents.

B. Contractor shall retain specific Subcontractors and Suppliers for the performance of designated parts of the Work if required by the Contract to do so.

C. Subsequent to the submittal of Contractor's Bid or final negotiation of the terms of the Contract, Owner may not require Contractor to retain any Subcontractor or Supplier to furnish or perform any of the Work against which Contractor has reasonable objection.

D. Prior to entry into any binding subcontract or purchase order, Contractor shall submit to Owner the identity of the proposed Subcontractor or Supplier (unless Owner has already deemed such proposed Subcontractor or Supplier acceptable during the bidding process or otherwise). Such proposed Subcontractor or Supplier shall be deemed acceptable to Owner unless Owner raises a substantive, reasonable objection within 5 days.

E. Owner may require the replacement of any Subcontractor or Supplier. Owner also may require Contractor to retain specific replacements; provided, however, that Owner may not require a replacement to which Contractor has a reasonable objection. If Contractor has submitted the identity of certain Subcontractors or Suppliers for acceptance by Owner, and Owner has accepted it (either in writing or by failing to make written objection thereto), then Owner may subsequently revoke the acceptance of any such Subcontractor or Supplier so identified solely on the basis of substantive, reasonable objection after due investigation.

Copyright© 2018 National Society of Professional Engineers, American Council of Engineering Companies, and American Society of Civil Engineers. All rights reserved.

Contractor shall submit an acceptable replacement for the rejected Subcontractor or Supplier.

F. If Owner requires the replacement of any Subcontractor or Supplier retained by Contractor to perform any part of the Work, then Contractor shall be entitled to an adjustment in Contract Price or Contract Times, with respect to the replacement; and Contractor shall initiate a Change Proposal for such adjustment within 30 days of Owner's requirement of replacement.

G. No acceptance by Owner of any such Subcontractor or Supplier, whether initially or as a replacement, will constitute a waiver of the right of Owner to the completion of the Work in accordance with the Contract Documents.

H. On a monthly basis, Contractor shall submit to Engineer a complete list of all Subcontractors and Suppliers having a direct contract with Contractor, and of all other Subcontractors and Suppliers known to Contractor at the time of submittal.

I. Contractor shall be solely responsible for scheduling and coordinating the work of Subcontractors and Suppliers.

J. The divisions and sections of the Specifications and the identifications of any Drawings do not control Contractor in dividing the Work among Subcontractors or Suppliers, or in delineating the Work to be performed by any specific trade.

K. All Work performed for Contractor by a Subcontractor or Supplier must be pursuant to an appropriate contractual agreement that specifically binds the Subcontractor or Supplier to the applicable terms and conditions of the Contract for the benefit of Owner and Engineer.

L. Owner may furnish to any Subcontractor or Supplier, to the extent practicable, information about amounts paid to Contractor for Work performed for Contractor by the Subcontractor or Supplier.

M. Contractor shall restrict all Subcontractors and Suppliers from communicating with Engineer or Owner, except through Contractor or in case of an emergency, or as otherwise expressly allowed in this Contract.

7.08 *Patent Fees and Royalties*

A. Contractor shall pay all license fees and royalties and assume all costs incident to the use in the performance of the Work or the incorporation in the Work of any invention, design, process, product, or device which is the subject of patent rights or copyrights held by others. If an invention, design, process, product, or device is specified in the Contract Documents for use in the performance of the Work and if, to the actual knowledge of Owner or Engineer, its use is subject to patent rights or copyrights calling for the payment of any license fee or royalty to others, the existence of such rights will be disclosed in the Contract Documents.

B. To the fullest extent permitted by Laws and Regulations, Owner shall indemnify and hold harmless Contractor, and its officers, directors, members, partners, employees, agents, consultants, and subcontractors, from and against all claims, costs, losses, and damages (including but not limited to all fees and charges of engineers, architects, attorneys, and other professionals, and all court or arbitration or other dispute resolution costs) arising out of or relating to any infringement of patent rights or copyrights incident to the use in the performance of the Work or resulting from the incorporation in the Work of any invention, design, process, product, or device specified in the Contract Documents, but not identified as

Copyright© 2018 National Society of Professional Engineers, American Council of Engineering Companies, and American Society of Civil Engineers. All rights reserved.

being subject to payment of any license fee or royalty to others required by patent rights or copyrights.

C. To the fullest extent permitted by Laws and Regulations, Contractor shall indemnify and hold harmless Owner and Engineer, and the officers, directors, members, partners, employees, agents, consultants and subcontractors of each and any of them, from and against all claims, costs, losses, and damages (including but not limited to all fees and charges of engineers, architects, attorneys, and other professionals and all court or arbitration or other dispute resolution costs) arising out of or relating to any infringement of patent rights or copyrights incident to the use in the performance of the Work or resulting from the incorporation in the Work of any invention, design, process, product, or device not specified in the Contract Documents.

7.09 *Permits*

A. Unless otherwise provided in the Contract Documents, Contractor shall obtain and pay for all construction permits, licenses, and certificates of occupancy. Owner shall assist Contractor, when necessary, in obtaining such permits and licenses. Contractor shall pay all governmental charges and inspection fees necessary for the prosecution of the Work which are applicable at the time of the submission of Contractor's Bid (or when Contractor became bound under a negotiated contract). Owner shall pay all charges of utility owners for connections for providing permanent service to the Work.

7.10 *Taxes*

A. Contractor shall pay all sales, consumer, use, and other similar taxes required to be paid by Contractor in accordance with the Laws and Regulations of the place of the Project which are applicable during the performance of the Work.

7.11 *Laws and Regulations*

A. Contractor shall give all notices required by and shall comply with all Laws and Regulations applicable to the performance of the Work. Neither Owner nor Engineer shall be responsible for monitoring Contractor's compliance with any Laws or Regulations.

B. If Contractor performs any Work or takes any other action knowing or having reason to know that it is contrary to Laws or Regulations, Contractor shall bear all resulting costs and losses, and shall indemnify and hold harmless Owner and Engineer, and the officers, directors, members, partners, employees, agents, consultants, and subcontractors of each and any of them, from and against all claims, costs, losses, and damages (including but not limited to all fees and charges of engineers, architects, attorneys, and other professionals and all court or arbitration or other dispute resolution costs) arising out of or relating to such Work or other action. It is not Contractor's responsibility to make certain that the Work described in the Contract Documents is in accordance with Laws and Regulations, but this does not relieve Contractor of its obligations under Paragraph 3.03.

C. Owner or Contractor may give written notice to the other party of any changes after the submission of Contractor's Bid (or after the date when Contractor became bound under a negotiated contract) in Laws or Regulations having an effect on the cost or time of performance of the Work, including but not limited to changes in Laws or Regulations having an effect on procuring permits and on sales, use, value-added, consumption, and other similar taxes. If Owner and Contractor are unable to agree on entitlement to or on the amount or extent, if any, of any adjustment in Contract Price or Contract Times resulting from such

Copyright© 2018 National Society of Professional Engineers, American Council of Engineering Companies, and American Society of Civil Engineers. All rights reserved.

changes, then within 30 days of such written notice Contractor may submit a Change Proposal, or Owner may initiate a Claim.

7.12 *Record Documents*

A. Contractor shall maintain in a safe place at the Site one printed record copy of all Drawings, Specifications, Addenda, Change Orders, Work Change Directives, Field Orders, written interpretations and clarifications, and approved Shop Drawings. Contractor shall keep such record documents in good order and annotate them to show changes made during construction. These record documents, together with all approved Samples, will be available to Engineer for reference. Upon completion of the Work, Contractor shall deliver these record documents to Engineer.

7.13 *Safety and Protection*

A. Contractor shall be solely responsible for initiating, maintaining, and supervising all safety precautions and programs in connection with the Work. Such responsibility does not relieve Subcontractors of their responsibility for the safety of persons or property in the performance of their work, nor for compliance with applicable safety Laws and Regulations.

B. Contractor shall designate a qualified and experienced safety representative whose duties and responsibilities are the prevention of Work-related accidents and the maintenance and supervision of safety precautions and programs.

C. Contractor shall take all necessary precautions for the safety of, and shall provide the necessary protection to prevent damage, injury, or loss to:

1. all persons on the Site or who may be affected by the Work;

2. all the Work and materials and equipment to be incorporated therein, whether in storage on or off the Site; and

3. other property at the Site or adjacent thereto, including trees, shrubs, lawns, walks, pavements, roadways, structures, other work in progress, utilities, and Underground Facilities not designated for removal, relocation, or replacement in the course of construction.

D. All damage, injury, or loss to any property referred to in Paragraph 7.13.C.2 or 7.13.C.3 caused, directly or indirectly, in whole or in part, by Contractor, any Subcontractor, Supplier, or any other individual or entity directly or indirectly employed by any of them to perform any of the Work, or anyone for whose acts any of them may be liable, shall be remedied by Contractor at its expense (except damage or loss attributable to the fault of Drawings or Specifications or to the acts or omissions of Owner or Engineer or anyone employed by any of them, or anyone for whose acts any of them may be liable, and not attributable, directly or indirectly, in whole or in part, to the fault or negligence of Contractor or any Subcontractor, Supplier, or other individual or entity directly or indirectly employed by any of them).

E. Contractor shall comply with all applicable Laws and Regulations relating to the safety of persons or property, or to the protection of persons or property from damage, injury, or loss; and shall erect and maintain all necessary safeguards for such safety and protection.

F. Contractor shall notify Owner; the owners of adjacent property; the owners of Underground Facilities and other utilities (if the identity of such owners is known to Contractor); and other contractors and utility owners performing work at or adjacent to the Site, in writing, when

Copyright© 2018 National Society of Professional Engineers, American Council of Engineering Companies, and American Society of Civil Engineers. All rights reserved.

Contractor knows that prosecution of the Work may affect them, and shall cooperate with them in the protection, removal, relocation, and replacement of their property or work in progress.

G. Contractor shall comply with the applicable requirements of Owner's safety programs, if any. Any Owner's safety programs that are applicable to the Work are identified or included in the Supplementary Conditions or Specifications.

H. Contractor shall inform Owner and Engineer of the specific requirements of Contractor's safety program with which Owner's and Engineer's employees and representatives must comply while at the Site.

I. Contractor's duties and responsibilities for safety and protection will continue until all the Work is completed, Engineer has issued a written notice to Owner and Contractor in accordance with Paragraph 15.06.C that the Work is acceptable, and Contractor has left the Site (except as otherwise expressly provided in connection with Substantial Completion).

J. Contractor's duties and responsibilities for safety and protection will resume whenever Contractor or any Subcontractor or Supplier returns to the Site to fulfill warranty or correction obligations, or to conduct other tasks arising from the Contract Documents.

7.14 *Hazard Communication Programs*

A. Contractor shall be responsible for coordinating any exchange of safety data sheets (formerly known as material safety data sheets) or other hazard communication information required to be made available to or exchanged between or among employers at the Site in accordance with Laws or Regulations.

7.15 *Emergencies*

A. In emergencies affecting the safety or protection of persons or the Work or property at the Site or adjacent thereto, Contractor is obligated to act to prevent damage, injury, or loss. Contractor shall give Engineer prompt written notice if Contractor believes that any significant changes in the Work or variations from the Contract Documents have been caused by an emergency, or are required as a result of Contractor's response to an emergency. If Engineer determines that a change in the Contract Documents is required because of an emergency or Contractor's response, a Work Change Directive or Change Order will be issued.

7.16 *Submittals*

A. *Shop Drawing and Sample Requirements*

1. Before submitting a Shop Drawing or Sample, Contractor shall:

a. review and coordinate the Shop Drawing or Sample with other Shop Drawings and Samples and with the requirements of the Work and the Contract Documents;

b. determine and verify:

1) all field measurements, quantities, dimensions, specified performance and design criteria, installation requirements, materials, catalog numbers, and similar information with respect to the Submittal;

2) the suitability of all materials and equipment offered with respect to the indicated application, fabrication, shipping, handling, storage, assembly, and installation pertaining to the performance of the Work; and

Copyright© 2018 National Society of Professional Engineers, American Council of Engineering Companies, and American Society of Civil Engineers. All rights reserved.

3) all information relative to Contractor's responsibilities for means, methods, techniques, sequences, and procedures of construction, and safety precautions and programs incident thereto;

c. confirm that the Submittal is complete with respect to all related data included in the Submittal.

2. Each Shop Drawing or Sample must bear a stamp or specific written certification that Contractor has satisfied Contractor's obligations under the Contract Documents with respect to Contractor's review of that Submittal, and that Contractor approves the Submittal.

3. With each Shop Drawing or Sample, Contractor shall give Engineer specific written notice of any variations that the Submittal may have from the requirements of the Contract Documents. This notice must be set forth in a written communication separate from the Submittal; and, in addition, in the case of a Shop Drawing by a specific notation made on the Shop Drawing itself.

B. *Submittal Procedures for Shop Drawings and Samples*: Contractor shall label and submit Shop Drawings and Samples to Engineer for review and approval in accordance with the accepted Schedule of Submittals.

1. *Shop Drawings*

a. Contractor shall submit the number of copies required in the Specifications.

b. Data shown on the Shop Drawings must be complete with respect to quantities, dimensions, specified performance and design criteria, materials, and similar data to show Engineer the services, materials, and equipment Contractor proposes to provide, and to enable Engineer to review the information for the limited purposes required by Paragraph 7.16.C.

2. *Samples*

a. Contractor shall submit the number of Samples required in the Specifications.

b. Contractor shall clearly identify each Sample as to material, Supplier, pertinent data such as catalog numbers, the use for which intended and other data as Engineer may require to enable Engineer to review the Submittal for the limited purposes required by Paragraph 7.16.C.

3. Where a Shop Drawing or Sample is required by the Contract Documents or the Schedule of Submittals, any related Work performed prior to Engineer's review and approval of the pertinent submittal will be at the sole expense and responsibility of Contractor.

C. *Engineer's Review of Shop Drawings and Samples*

1. Engineer will provide timely review of Shop Drawings and Samples in accordance with the accepted Schedule of Submittals. Engineer's review and approval will be only to determine if the items covered by the Submittals will, after installation or incorporation in the Work, comply with the requirements of the Contract Documents, and be compatible with the design concept of the completed Project as a functioning whole as indicated by the Contract Documents.

Copyright© 2018 National Society of Professional Engineers, American Council of Engineering Companies, and American Society of Civil Engineers. All rights reserved.

2. Engineer's review and approval will not extend to means, methods, techniques, sequences, or procedures of construction, or to safety precautions or programs incident thereto.

3. Engineer's review and approval of a separate item as such will not indicate approval of the assembly in which the item functions.

4. Engineer's review and approval of a Shop Drawing or Sample will not relieve Contractor from responsibility for any variation from the requirements of the Contract Documents unless Contractor has complied with the requirements of Paragraph 7.16.A.3 and Engineer has given written approval of each such variation by specific written notation thereof incorporated in or accompanying the Shop Drawing or Sample. Engineer will document any such approved variation from the requirements of the Contract Documents in a Field Order or other appropriate Contract modification.

5. Engineer's review and approval of a Shop Drawing or Sample will not relieve Contractor from responsibility for complying with the requirements of Paragraphs 7.16.A and B.

6. Engineer's review and approval of a Shop Drawing or Sample, or of a variation from the requirements of the Contract Documents, will not, under any circumstances, change the Contract Times or Contract Price, unless such changes are included in a Change Order.

7. Neither Engineer's receipt, review, acceptance, or approval of a Shop Drawing or Sample will result in such item becoming a Contract Document.

8. Contractor shall perform the Work in compliance with the requirements and commitments set forth in approved Shop Drawings and Samples, subject to the provisions of Paragraph 7.16.C.4.

D. *Resubmittal Procedures for Shop Drawings and Samples*

1. Contractor shall make corrections required by Engineer and shall return the required number of corrected copies of Shop Drawings and submit, as required, new Samples for review and approval. Contractor shall direct specific attention in writing to revisions other than the corrections called for by Engineer on previous Submittals.

2. Contractor shall furnish required Shop Drawing and Sample submittals with sufficient information and accuracy to obtain required approval of an item with no more than two resubmittals. Engineer will record Engineer's time for reviewing a third or subsequent resubmittal of a Shop Drawing or Sample, and Contractor shall be responsible for Engineer's charges to Owner for such time. Owner may impose a set-off against payments due Contractor to secure reimbursement for such charges.

3. If Contractor requests a change of a previously approved Shop Drawing or Sample, Contractor shall be responsible for Engineer's charges to Owner for its review time, and Owner may impose a set-off against payments due Contractor to secure reimbursement for such charges, unless the need for such change is beyond the control of Contractor.

Copyright© 2018 National Society of Professional Engineers, American Council of Engineering Companies, and American Society of Civil Engineers. All rights reserved.

E. *Submittals Other than Shop Drawings, Samples, and Owner-Delegated Designs*

1. The following provisions apply to all Submittals other than Shop Drawings, Samples, and Owner-delegated designs:

a. Contractor shall submit all such Submittals to the Engineer in accordance with the Schedule of Submittals and pursuant to the applicable terms of the Contract Documents.

b. Engineer will provide timely review of all such Submittals in accordance with the Schedule of Submittals and return such Submittals with a notation of either Accepted or Not Accepted. Any such Submittal that is not returned within the time established in the Schedule of Submittals will be deemed accepted.

c. Engineer's review will be only to determine if the Submittal is acceptable under the requirements of the Contract Documents as to general form and content of the Submittal.

d. If any such Submittal is not accepted, Contractor shall confer with Engineer regarding the reason for the non-acceptance, and resubmit an acceptable document.

2. Procedures for the submittal and acceptance of the Progress Schedule, the Schedule of Submittals, and the Schedule of Values are set forth in Paragraphs 2.03. 2.04, and 2.05.

F. Owner-delegated Designs: Submittals pursuant to Owner-delegated designs are governed by the provisions of Paragraph 7.19.

7.17 *Contractor's General Warranty and Guarantee*

A. Contractor warrants and guarantees to Owner that all Work will be in accordance with the Contract Documents and will not be defective. Engineer is entitled to rely on Contractor's warranty and guarantee.

B. Owner's rights under this warranty and guarantee are in addition to, and are not limited by, Owner's rights under the correction period provisions of Paragraph 15.08. The time in which Owner may enforce its warranty and guarantee rights under this Paragraph 7.17 is limited only by applicable Laws and Regulations restricting actions to enforce such rights; provided, however, that after the end of the correction period under Paragraph 15.08:

1. Owner shall give Contractor written notice of any defective Work within 60 days of the discovery that such Work is defective; and

2. Such notice will be deemed the start of an event giving rise to a Claim under Paragraph 12.01.B, such that any related Claim must be brought within 30 days of the notice.

C. Contractor's warranty and guarantee hereunder excludes defects or damage caused by:

1. abuse, or improper modification, maintenance, or operation, by persons other than Contractor, Subcontractors, Suppliers, or any other individual or entity for whom Contractor is responsible; or

2. normal wear and tear under normal usage.

D. Contractor's obligation to perform and complete the Work in accordance with the Contract Documents is absolute. None of the following will constitute an acceptance of Work that is

Copyright© 2018 National Society of Professional Engineers, American Council of Engineering Companies, and American Society of Civil Engineers. All rights reserved.

not in accordance with the Contract Documents, a release of Contractor's obligation to perform the Work in accordance with the Contract Documents, or a release of Owner's warranty and guarantee rights under this Paragraph 7.17:

1. Observations by Engineer;
2. Recommendation by Engineer or payment by Owner of any progress or final payment;
3. The issuance of a certificate of Substantial Completion by Engineer or any payment related thereto by Owner;
4. Use or occupancy of the Work or any part thereof by Owner;
5. Any review and approval of a Shop Drawing or Sample submittal;
6. The issuance of a notice of acceptability by Engineer;
7. The end of the correction period established in Paragraph 15.08;
8. Any inspection, test, or approval by others; or
9. Any correction of defective Work by Owner.

E. If the Contract requires the Contractor to accept the assignment of a contract entered into by Owner, then the specific warranties, guarantees, and correction obligations contained in the assigned contract will govern with respect to Contractor's performance obligations to Owner for the Work described in the assigned contract.

7.18 *Indemnification*

A. To the fullest extent permitted by Laws and Regulations, and in addition to any other obligations of Contractor under the Contract or otherwise, Contractor shall indemnify and hold harmless Owner and Engineer, and the officers, directors, members, partners, employees, agents, consultants and subcontractors of each and any of them, from losses, damages, costs, and judgments (including but not limited to all fees and charges of engineers, architects, attorneys, and other professionals, and all court or arbitration or other dispute resolution costs) arising from third-party claims or actions relating to or resulting from the performance or furnishing of the Work, provided that any such claim, action, loss, cost, judgment or damage is attributable to bodily injury, sickness, disease, or death, or to damage to or destruction of tangible property (other than the Work itself), including the loss of use resulting therefrom, but only to the extent caused by any negligent act or omission of Contractor, any Subcontractor, any Supplier, or any individual or entity directly or indirectly employed by any of them to perform any of the Work, or anyone for whose acts any of them may be liable.

B. In any and all claims against Owner or Engineer, or any of their officers, directors, members, partners, employees, agents, consultants, or subcontractors, by any employee (or the survivor or personal representative of such employee) of Contractor, any Subcontractor, any Supplier, or any individual or entity directly or indirectly employed by any of them to perform any of the Work, or anyone for whose acts any of them may be liable, the indemnification obligation under Paragraph 7.18.A will not be limited in any way by any limitation on the amount or type of damages, compensation, or benefits payable by or for Contractor or any such Subcontractor, Supplier, or other individual or entity under workers' compensation acts, disability benefit acts, or other employee benefit acts.

Copyright© 2018 National Society of Professional Engineers, American Council of Engineering Companies, and American Society of Civil Engineers. All rights reserved.

7.19 *Delegation of Professional Design Services*

A. Owner may require Contractor to provide professional design services for a portion of the Work by express delegation in the Contract Documents. Such delegation will specify the performance and design criteria that such services must satisfy, and the Submittals that Contractor must furnish to Engineer with respect to the Owner-delegated design.

B. Contractor shall cause such Owner-delegated professional design services to be provided pursuant to the professional standard of care by a properly licensed design professional, whose signature and seal must appear on all drawings, calculations, specifications, certifications, and Submittals prepared by such design professional. Such design professional must issue all certifications of design required by Laws and Regulations.

C. If a Shop Drawing or other Submittal related to the Owner-delegated design is prepared by Contractor, a Subcontractor, or others for submittal to Engineer, then such Shop Drawing or other Submittal must bear the written approval of Contractor's design professional when submitted by Contractor to Engineer.

D. Owner and Engineer shall be entitled to rely upon the adequacy, accuracy, and completeness of the services, certifications, and approvals performed or provided by the design professionals retained or employed by Contractor under an Owner-delegated design, subject to the professional standard of care and the performance and design criteria stated in the Contract Documents.

E. Pursuant to this Paragraph 7.19, Engineer's review, approval, and other determinations regarding design drawings, calculations, specifications, certifications, and other Submittals furnished by Contractor pursuant to an Owner-delegated design will be only for the following limited purposes:

1. Checking for conformance with the requirements of this Paragraph 7.19;

2. Confirming that Contractor (through its design professionals) has used the performance and design criteria specified in the Contract Documents; and

3. Establishing that the design furnished by Contractor is consistent with the design concept expressed in the Contract Documents.

F. Contractor shall not be responsible for the adequacy of performance or design criteria specified by Owner or Engineer.

G. Contractor is not required to provide professional services in violation of applicable Laws and Regulations.

ARTICLE 8—OTHER WORK AT THE SITE

8.01 *Other Work*

A. In addition to and apart from the Work under the Contract Documents, the Owner may perform other work at or adjacent to the Site. Such other work may be performed by Owner's employees, or through contracts between the Owner and third parties. Owner may also arrange to have third-party utility owners perform work on their utilities and facilities at or adjacent to the Site.

Copyright© 2018 National Society of Professional Engineers, American Council of Engineering Companies, and American Society of Civil Engineers. All rights reserved.

B. If Owner performs other work at or adjacent to the Site with Owner's employees, or through contracts for such other work, then Owner shall give Contractor written notice thereof prior to starting any such other work. If Owner has advance information regarding the start of any third-party utility work that Owner has arranged to take place at or adjacent to the Site, Owner shall provide such information to Contractor.

C. Contractor shall afford proper and safe access to the Site to each contractor that performs such other work, each utility owner performing other work, and Owner, if Owner is performing other work with Owner's employees, and provide a reasonable opportunity for the introduction and storage of materials and equipment and the execution of such other work.

D. Contractor shall do all cutting, fitting, and patching of the Work that may be required to properly connect or otherwise make its several parts come together and properly integrate with such other work. Contractor shall not endanger any work of others by cutting, excavating, or otherwise altering such work; provided, however, that Contractor may cut or alter others' work with the written consent of Engineer and the others whose work will be affected.

E. If the proper execution or results of any part of Contractor's Work depends upon work performed by others, Contractor shall inspect such other work and promptly report to Engineer in writing any delays, defects, or deficiencies in such other work that render it unavailable or unsuitable for the proper execution and results of Contractor's Work. Contractor's failure to so report will constitute an acceptance of such other work as fit and proper for integration with Contractor's Work except for latent defects and deficiencies in such other work.

F. The provisions of this article are not applicable to work that is performed by third-party utilities or other third-party entities without a contract with Owner, or that is performed without having been arranged by Owner. If such work occurs, then any related delay, disruption, or interference incurred by Contractor is governed by the provisions of Paragraph 4.05.C.3.

8.02 *Coordination*

A. If Owner intends to contract with others for the performance of other work at or adjacent to the Site, to perform other work at or adjacent to the Site with Owner's employees, or to arrange to have utility owners perform work at or adjacent to the Site, the following will be set forth in the Supplementary Conditions or provided to Contractor prior to the start of any such other work:

1. The identity of the individual or entity that will have authority and responsibility for coordination of the activities among the various contractors;

2. An itemization of the specific matters to be covered by such authority and responsibility; and

3. The extent of such authority and responsibilities.

B. Unless otherwise provided in the Supplementary Conditions, Owner shall have sole authority and responsibility for such coordination.

Copyright© 2018 National Society of Professional Engineers, American Council of Engineering Companies, and American Society of Civil Engineers. All rights reserved.

8.03 *Legal Relationships*

A. If, in the course of performing other work for Owner at or adjacent to the Site, the Owner's employees, any other contractor working for Owner, or any utility owner that Owner has arranged to perform work, causes damage to the Work or to the property of Contractor or its Subcontractors, or delays, disrupts, interferes with, or increases the scope or cost of the performance of the Work, through actions or inaction, then Contractor shall be entitled to an equitable adjustment in the Contract Price or the Contract Times. Contractor must submit any Change Proposal seeking an equitable adjustment in the Contract Price or the Contract Times under this paragraph within 30 days of the damaging, delaying, disrupting, or interfering event. The entitlement to, and extent of, any such equitable adjustment will take into account information (if any) regarding such other work that was provided to Contractor in the Contract Documents prior to the submittal of the Bid or the final negotiation of the terms of the Contract, and any remedies available to Contractor under Laws or Regulations concerning utility action or inaction. When applicable, any such equitable adjustment in Contract Price will be conditioned on Contractor assigning to Owner all Contractor's rights against such other contractor or utility owner with respect to the damage, delay, disruption, or interference that is the subject of the adjustment. Contractor's entitlement to an adjustment of the Contract Times or Contract Price is subject to the provisions of Paragraphs 4.05.D and 4.05.E.

B. Contractor shall take reasonable and customary measures to avoid damaging, delaying, disrupting, or interfering with the work of Owner, any other contractor, or any utility owner performing other work at or adjacent to the Site.

    1. If Contractor fails to take such measures and as a result damages, delays, disrupts, or interferes with the work of any such other contractor or utility owner, then Owner may impose a set-off against payments due Contractor, and assign to such other contractor or utility owner the Owner's contractual rights against Contractor with respect to the breach of the obligations set forth in this Paragraph 8.03.B.

    2. When Owner is performing other work at or adjacent to the Site with Owner's employees, Contractor shall be liable to Owner for damage to such other work, and for the reasonable direct delay, disruption, and interference costs incurred by Owner as a result of Contractor's failure to take reasonable and customary measures with respect to Owner's other work. In response to such damage, delay, disruption, or interference, Owner may impose a set-off against payments due Contractor.

C. If Contractor damages, delays, disrupts, or interferes with the work of any other contractor, or any utility owner performing other work at or adjacent to the Site, through Contractor's failure to take reasonable and customary measures to avoid such impacts, or if any claim arising out of Contractor's actions, inactions, or negligence in performance of the Work at or adjacent to the Site is made by any such other contractor or utility owner against Contractor, Owner, or Engineer, then Contractor shall (1) promptly attempt to settle the claim as to all parties through negotiations with such other contractor or utility owner, or otherwise resolve the claim by arbitration or other dispute resolution proceeding or at law, and (2) indemnify and hold harmless Owner and Engineer, and the officers, directors, members, partners, employees, agents, consultants and subcontractors of each and any of them from and against any such claims, and against all costs, losses, and damages (including but not limited to all fees and charges of engineers, architects, attorneys, and other professionals and all court or

Copyright© 2018 National Society of Professional Engineers, American Council of Engineering Companies, and American Society of Civil Engineers. All rights reserved.

arbitration or other dispute resolution costs) arising out of or relating to such damage, delay, disruption, or interference.

ARTICLE 9—OWNER'S RESPONSIBILITIES

9.01 *Communications to Contractor*

A. Except as otherwise provided in these General Conditions, Owner shall issue all communications to Contractor through Engineer.

9.02 *Replacement of Engineer*

A. Owner may at its discretion appoint an engineer to replace Engineer, provided Contractor makes no reasonable objection to the replacement engineer. The replacement engineer's status under the Contract Documents will be that of the former Engineer.

9.03 *Furnish Data*

A. Owner shall promptly furnish the data required of Owner under the Contract Documents.

9.04 *Pay When Due*

A. Owner shall make payments to Contractor when they are due as provided in the Agreement.

9.05 *Lands and Easements; Reports, Tests, and Drawings*

A. Owner's duties with respect to providing lands and easements are set forth in Paragraph 5.01.

B. Owner's duties with respect to providing engineering surveys to establish reference points are set forth in Paragraph 4.03.

C. Article 5 refers to Owner's identifying and making available to Contractor copies of reports of explorations and tests of conditions at the Site, and drawings of physical conditions relating to existing surface or subsurface structures at the Site.

9.06 *Insurance*

A. Owner's responsibilities, if any, with respect to purchasing and maintaining liability and property insurance are set forth in Article 6.

9.07 *Change Orders*

A. Owner's responsibilities with respect to Change Orders are set forth in Article 11.

9.08 *Inspections, Tests, and Approvals*

A. Owner's responsibility with respect to certain inspections, tests, and approvals is set forth in Paragraph 14.02.B.

9.09 *Limitations on Owner's Responsibilities*

A. The Owner shall not supervise, direct, or have control or authority over, nor be responsible for, Contractor's means, methods, techniques, sequences, or procedures of construction, or the safety precautions and programs incident thereto, or for any failure of Contractor to comply with Laws and Regulations applicable to the performance of the Work. Owner will not be responsible for Contractor's failure to perform the Work in accordance with the Contract Documents.

Copyright© 2018 National Society of Professional Engineers, American Council of Engineering Companies, and American Society of Civil Engineers. All rights reserved.

9.10 *Undisclosed Hazardous Environmental Condition*

A. Owner's responsibility in respect to an undisclosed Hazardous Environmental Condition is set forth in Paragraph 5.06.

9.11 *Evidence of Financial Arrangements*

A. Upon request of Contractor, Owner shall furnish Contractor reasonable evidence that financial arrangements have been made to satisfy Owner's obligations under the Contract (including obligations under proposed changes in the Work).

9.12 *Safety Programs*

A. While at the Site, Owner's employees and representatives shall comply with the specific applicable requirements of Contractor's safety programs of which Owner has been informed.

B. Owner shall furnish copies of any applicable Owner safety programs to Contractor.

ARTICLE 10—ENGINEER'S STATUS DURING CONSTRUCTION

10.01 *Owner's Representative*

A. Engineer will be Owner's representative during the construction period. The duties and responsibilities and the limitations of authority of Engineer as Owner's representative during construction are set forth in the Contract.

10.02 *Visits to Site*

A. Engineer will make visits to the Site at intervals appropriate to the various stages of construction as Engineer deems necessary in order to observe, as an experienced and qualified design professional, the progress that has been made and the quality of the various aspects of Contractor's executed Work. Based on information obtained during such visits and observations, Engineer, for the benefit of Owner, will determine, in general, if the Work is proceeding in accordance with the Contract Documents. Engineer will not be required to make exhaustive or continuous inspections on the Site to check the quality or quantity of the Work. Engineer's efforts will be directed toward providing for Owner a greater degree of confidence that the completed Work will conform generally to the Contract Documents. On the basis of such visits and observations, Engineer will keep Owner informed of the progress of the Work and will endeavor to guard Owner against defective Work.

B. Engineer's visits and observations are subject to all the limitations on Engineer's authority and responsibility set forth in Paragraph 10.07. Particularly, but without limitation, during or as a result of Engineer's visits or observations of Contractor's Work, Engineer will not supervise, direct, control, or have authority over or be responsible for Contractor's means, methods, techniques, sequences, or procedures of construction, or the safety precautions and programs incident thereto, or for any failure of Contractor to comply with Laws and Regulations applicable to the performance of the Work.

10.03 *Resident Project Representative*

A. If Owner and Engineer have agreed that Engineer will furnish a Resident Project Representative to represent Engineer at the Site and assist Engineer in observing the progress and quality of the Work, then the authority and responsibilities of any such Resident Project Representative will be as provided in the Supplementary Conditions, and limitations on the

Copyright© 2018 National Society of Professional Engineers, American Council of Engineering Companies, and American Society of Civil Engineers. All rights reserved.

responsibilities thereof will be as provided in the Supplementary Conditions and in Paragraph 10.07.

B. If Owner designates an individual or entity who is not Engineer's consultant, agent, or employee to represent Owner at the Site, then the responsibilities and authority of such individual or entity will be as provided in the Supplementary Conditions.

10.04 *Engineer's Authority*

A. Engineer has the authority to reject Work in accordance with Article 14.

B. Engineer's authority as to Submittals is set forth in Paragraph 7.16.

C. Engineer's authority as to design drawings, calculations, specifications, certifications and other Submittals from Contractor in response to Owner's delegation (if any) to Contractor of professional design services, is set forth in Paragraph 7.19.

D. Engineer's authority as to changes in the Work is set forth in Article 11.

E. Engineer's authority as to Applications for Payment is set forth in Article 15.

10.05 *Determinations for Unit Price Work*

A. Engineer will determine the actual quantities and classifications of Unit Price Work performed by Contractor as set forth in Paragraph 13.03.

10.06 *Decisions on Requirements of Contract Documents and Acceptability of Work*

A. Engineer will render decisions regarding the requirements of the Contract Documents, and judge the acceptability of the Work, pursuant to the specific procedures set forth herein for initial interpretations, Change Proposals, and acceptance of the Work. In rendering such decisions and judgments, Engineer will not show partiality to Owner or Contractor, and will not be liable to Owner, Contractor, or others in connection with any proceedings, interpretations, decisions, or judgments conducted or rendered in good faith.

10.07 *Limitations on Engineer's Authority and Responsibilities*

A. Neither Engineer's authority or responsibility under this Article 10 or under any other provision of the Contract, nor any decision made by Engineer in good faith either to exercise or not exercise such authority or responsibility or the undertaking, exercise, or performance of any authority or responsibility by Engineer, will create, impose, or give rise to any duty in contract, tort, or otherwise owed by Engineer to Contractor, any Subcontractor, any Supplier, any other individual or entity, or to any surety for or employee or agent of any of them.

B. Engineer will not supervise, direct, control, or have authority over or be responsible for Contractor's means, methods, techniques, sequences, or procedures of construction, or the safety precautions and programs incident thereto, or for any failure of Contractor to comply with Laws and Regulations applicable to the performance of the Work. Engineer will not be responsible for Contractor's failure to perform the Work in accordance with the Contract Documents.

C. Engineer will not be responsible for the acts or omissions of Contractor or of any Subcontractor, any Supplier, or of any other individual or entity performing any of the Work.

D. Engineer's review of the final Application for Payment and accompanying documentation, and all maintenance and operating instructions, schedules, guarantees, bonds, certificates of

Copyright© 2018 National Society of Professional Engineers, American Council of Engineering Companies, and American Society of Civil Engineers. All rights reserved.

inspection, tests and approvals, and other documentation required to be delivered by Contractor under Paragraph 15.06.A, will only be to determine generally that their content complies with the requirements of, and in the case of certificates of inspections, tests, and approvals, that the results certified indicate compliance with the Contract Documents.

E. The limitations upon authority and responsibility set forth in this Paragraph 10.07 also apply to the Resident Project Representative, if any.

10.08 *Compliance with Safety Program*

A. While at the Site, Engineer's employees and representatives will comply with the specific applicable requirements of Owner's and Contractor's safety programs of which Engineer has been informed.

ARTICLE 11—CHANGES TO THE CONTRACT

11.01 *Amending and Supplementing the Contract*

A. The Contract may be amended or supplemented by a Change Order, a Work Change Directive, or a Field Order.

B. If an amendment or supplement to the Contract includes a change in the Contract Price or the Contract Times, such amendment or supplement must be set forth in a Change Order.

C. All changes to the Contract that involve (1) the performance or acceptability of the Work, (2) the design (as set forth in the Drawings, Specifications, or otherwise), or (3) other engineering or technical matters, must be supported by Engineer's recommendation. Owner and Contractor may amend other terms and conditions of the Contract without the recommendation of the Engineer.

11.02 *Change Orders*

A. Owner and Contractor shall execute appropriate Change Orders covering:

1. Changes in Contract Price or Contract Times which are agreed to by the parties, including any undisputed sum or amount of time for Work actually performed in accordance with a Work Change Directive;

2. Changes in Contract Price resulting from an Owner set-off, unless Contractor has duly contested such set-off;

3. Changes in the Work which are: (a) ordered by Owner pursuant to Paragraph 11.05, (b) required because of Owner's acceptance of defective Work under Paragraph 14.04 or Owner's correction of defective Work under Paragraph 14.07, or (c) agreed to by the parties, subject to the need for Engineer's recommendation if the change in the Work involves the design (as set forth in the Drawings, Specifications, or otherwise) or other engineering or technical matters; and

4. Changes that embody the substance of any final and binding results under: Paragraph 11.03.B, resolving the impact of a Work Change Directive; Paragraph 11.09, concerning Change Proposals; Article 12, Claims; Paragraph 13.02.D, final adjustments resulting from allowances; Paragraph 13.03.D, final adjustments relating to determination of quantities for Unit Price Work; and similar provisions.

Copyright© 2018 National Society of Professional Engineers, American Council of Engineering Companies, and American Society of Civil Engineers. All rights reserved.

B. If Owner or Contractor refuses to execute a Change Order that is required to be executed under the terms of Paragraph 11.02.A, it will be deemed to be of full force and effect, as if fully executed.

11.03 *Work Change Directives*

A. A Work Change Directive will not change the Contract Price or the Contract Times but is evidence that the parties expect that the modification ordered or documented by a Work Change Directive will be incorporated in a subsequently issued Change Order, following negotiations by the parties as to the Work Change Directive's effect, if any, on the Contract Price and Contract Times; or, if negotiations are unsuccessful, by a determination under the terms of the Contract Documents governing adjustments, expressly including Paragraph 11.07 regarding change of Contract Price.

B. If Owner has issued a Work Change Directive and:

1. Contractor believes that an adjustment in Contract Times or Contract Price is necessary, then Contractor shall submit any Change Proposal seeking such an adjustment no later than 30 days after the completion of the Work set out in the Work Change Directive.

2. Owner believes that an adjustment in Contract Times or Contract Price is necessary, then Owner shall submit any Claim seeking such an adjustment no later than 60 days after issuance of the Work Change Directive.

11.04 *Field Orders*

A. Engineer may authorize minor changes in the Work if the changes do not involve an adjustment in the Contract Price or the Contract Times and are compatible with the design concept of the completed Project as a functioning whole as indicated by the Contract Documents. Such changes will be accomplished by a Field Order and will be binding on Owner and also on Contractor, which shall perform the Work involved promptly.

B. If Contractor believes that a Field Order justifies an adjustment in the Contract Price or Contract Times, then before proceeding with the Work at issue, Contractor shall submit a Change Proposal as provided herein.

11.05 *Owner-Authorized Changes in the Work*

A. Without invalidating the Contract and without notice to any surety, Owner may, at any time or from time to time, order additions, deletions, or revisions in the Work. Changes involving the design (as set forth in the Drawings, Specifications, or otherwise) or other engineering or technical matters will be supported by Engineer's recommendation.

B. Such changes in the Work may be accomplished by a Change Order, if Owner and Contractor have agreed as to the effect, if any, of the changes on Contract Times or Contract Price; or by a Work Change Directive. Upon receipt of any such document, Contractor shall promptly proceed with the Work involved; or, in the case of a deletion in the Work, promptly cease construction activities with respect to such deleted Work. Added or revised Work must be performed under the applicable conditions of the Contract Documents.

C. Nothing in this Paragraph 11.05 obligates Contractor to undertake work that Contractor reasonably concludes cannot be performed in a manner consistent with Contractor's safety obligations under the Contract Documents or Laws and Regulations.

Copyright© 2018 National Society of Professional Engineers, American Council of Engineering Companies, and American Society of Civil Engineers. All rights reserved.

11.06 *Unauthorized Changes in the Work*

A. Contractor shall not be entitled to an increase in the Contract Price or an extension of the Contract Times with respect to any work performed that is not required by the Contract Documents, as amended, modified, or supplemented, except in the case of an emergency as provided in Paragraph 7.15 or in the case of uncovering Work as provided in Paragraph 14.05.C.2.

11.07 *Change of Contract Price*

A. The Contract Price may only be changed by a Change Order. Any Change Proposal for an adjustment in the Contract Price must comply with the provisions of Paragraph 11.09. Any Claim for an adjustment of Contract Price must comply with the provisions of Article 12.

B. An adjustment in the Contract Price will be determined as follows:

1. Where the Work involved is covered by unit prices contained in the Contract Documents, then by application of such unit prices to the quantities of the items involved (subject to the provisions of Paragraph 13.03);

2. Where the Work involved is not covered by unit prices contained in the Contract Documents, then by a mutually agreed lump sum (which may include an allowance for overhead and profit not necessarily in accordance with Paragraph 11.07.C.2); or

3. Where the Work involved is not covered by unit prices contained in the Contract Documents and the parties do not reach mutual agreement to a lump sum, then on the basis of the Cost of the Work (determined as provided in Paragraph 13.01) plus a Contractor's fee for overhead and profit (determined as provided in Paragraph 11.07.C).

C. *Contractor's Fee*: When applicable, the Contractor's fee for overhead and profit will be determined as follows:

1. A mutually acceptable fixed fee; or

2. If a fixed fee is not agreed upon, then a fee based on the following percentages of the various portions of the Cost of the Work:

a. For costs incurred under Paragraphs 13.01.B.1 and 13.01.B.2, the Contractor's fee will be 15 percent;

b. For costs incurred under Paragraph 13.01.B.3, the Contractor's fee will be 5 percent;

c. Where one or more tiers of subcontracts are on the basis of Cost of the Work plus a fee and no fixed fee is agreed upon, the intent of Paragraphs 11.07.C.2.a and 11.07.C.2.b is that the Contractor's fee will be based on: (1) a fee of 15 percent of the costs incurred under Paragraphs 13.01.B.1 and 13.01.B.2 by the Subcontractor that actually performs the Work, at whatever tier, and (2) with respect to Contractor itself and to any Subcontractors of a tier higher than that of the Subcontractor that actually performs the Work, a fee of 5 percent of the amount (fee plus underlying costs incurred) attributable to the next lower tier Subcontractor; provided, however, that for any such subcontracted Work the maximum total fee to be paid by Owner will be no greater than 27 percent of the costs incurred by the Subcontractor that actually performs the Work;

Copyright© 2018 National Society of Professional Engineers, American Council of Engineering Companies, and American Society of Civil Engineers. All rights reserved.

d. No fee will be payable on the basis of costs itemized under Paragraphs 13.01.B.4, 13.01.B.5, and 13.01.C;

e. The amount of credit to be allowed by Contractor to Owner for any change which results in a net decrease in Cost of the Work will be the amount of the actual net decrease in Cost of the Work and a deduction of an additional amount equal to 5 percent of such actual net decrease in Cost of the Work; and

f. When both additions and credits are involved in any one change or Change Proposal, the adjustment in Contractor's fee will be computed by determining the sum of the costs in each of the cost categories in Paragraph 13.01.B (specifically, payroll costs, Paragraph 13.01.B.1; incorporated materials and equipment costs, Paragraph 13.01.B.2; Subcontract costs, Paragraph 13.01.B.3; special consultants costs, Paragraph 13.01.B.4; and other costs, Paragraph 13.01.B.5) and applying to each such cost category sum the appropriate fee from Paragraphs 11.07.C.2.a through 11.07.C.2.e, inclusive.

11.08 *Change of Contract Times*

A. The Contract Times may only be changed by a Change Order. Any Change Proposal for an adjustment in the Contract Times must comply with the provisions of Paragraph 11.09. Any Claim for an adjustment in the Contract Times must comply with the provisions of Article 12.

B. Delay, disruption, and interference in the Work, and any related changes in Contract Times, are addressed in and governed by Paragraph 4.05.

11.09 *Change Proposals*

A. *Purpose and Content*: Contractor shall submit a Change Proposal to Engineer to request an adjustment in the Contract Times or Contract Price; contest an initial decision by Engineer concerning the requirements of the Contract Documents or relating to the acceptability of the Work under the Contract Documents; challenge a set-off against payment due; or seek other relief under the Contract. The Change Proposal will specify any proposed change in Contract Times or Contract Price, or other proposed relief, and explain the reason for the proposed change, with citations to any governing or applicable provisions of the Contract Documents. Each Change Proposal will address only one issue, or a set of closely related issues.

B. *Change Proposal Procedures*

1. *Submittal*: Contractor shall submit each Change Proposal to Engineer within 30 days after the start of the event giving rise thereto, or after such initial decision.

2. *Supporting Data*: The Contractor shall submit supporting data, including the proposed change in Contract Price or Contract Time (if any), to the Engineer and Owner within 15 days after the submittal of the Change Proposal.

a. Change Proposals based on or related to delay, interruption, or interference must comply with the provisions of Paragraphs 4.05.D and 4.05.E.

b. Change proposals related to a change of Contract Price must include full and detailed accounts of materials incorporated into the Work and labor and equipment used for the subject Work.

Copyright© 2018 National Society of Professional Engineers, American Council of Engineering Companies, and American Society of Civil Engineers. All rights reserved.

The supporting data must be accompanied by a written statement that the supporting data are accurate and complete, and that any requested time or price adjustment is the entire adjustment to which Contractor believes it is entitled as a result of said event.

3. *Engineer's Initial Review*: Engineer will advise Owner regarding the Change Proposal, and consider any comments or response from Owner regarding the Change Proposal. If in its discretion Engineer concludes that additional supporting data is needed before conducting a full review and making a decision regarding the Change Proposal, then Engineer may request that Contractor submit such additional supporting data by a date specified by Engineer, prior to Engineer beginning its full review of the Change Proposal.

4. *Engineer's Full Review and Action on the Change Proposal*: Upon receipt of Contractor's supporting data (including any additional data requested by Engineer), Engineer will conduct a full review of each Change Proposal and, within 30 days after such receipt of the Contractor's supporting data, either approve the Change Proposal in whole, deny it in whole, or approve it in part and deny it in part. Such actions must be in writing, with a copy provided to Owner and Contractor. If Engineer does not take action on the Change Proposal within 30 days, then either Owner or Contractor may at any time thereafter submit a letter to the other party indicating that as a result of Engineer's inaction the Change Proposal is deemed denied, thereby commencing the time for appeal of the denial under Article 12.

5. *Binding Decision*: Engineer's decision is final and binding upon Owner and Contractor, unless Owner or Contractor appeals the decision by filing a Claim under Article 12.

C. *Resolution of Certain Change Proposals*: If the Change Proposal does not involve the design (as set forth in the Drawings, Specifications, or otherwise), the acceptability of the Work, or other engineering or technical matters, then Engineer will notify the parties in writing that the Engineer is unable to resolve the Change Proposal. For purposes of further resolution of such a Change Proposal, such notice will be deemed a denial, and Contractor may choose to seek resolution under the terms of Article 12.

D. *Post-Completion*: Contractor shall not submit any Change Proposals after Engineer issues a written recommendation of final payment pursuant to Paragraph 15.06.B.

11.10 *Notification to Surety*

A. If the provisions of any bond require notice to be given to a surety of any change affecting the general scope of the Work or the provisions of the Contract Documents (including, but not limited to, Contract Price or Contract Times), the giving of any such notice will be Contractor's responsibility. The amount of each applicable bond will be adjusted to reflect the effect of any such change.

ARTICLE 12—CLAIMS

12.01 *Claims*

A. *Claims Process*: The following disputes between Owner and Contractor are subject to the Claims process set forth in this article:

1. Appeals by Owner or Contractor of Engineer's decisions regarding Change Proposals;

Copyright© 2018 National Society of Professional Engineers, American Council of Engineering Companies, and American Society of Civil Engineers. All rights reserved.

2. Owner demands for adjustments in the Contract Price or Contract Times, or other relief under the Contract Documents;

3. Disputes that Engineer has been unable to address because they do not involve the design (as set forth in the Drawings, Specifications, or otherwise), the acceptability of the Work, or other engineering or technical matters; and

4. Subject to the waiver provisions of Paragraph 15.07, any dispute arising after Engineer has issued a written recommendation of final payment pursuant to Paragraph 15.06.B.

B. *Submittal of Claim*: The party submitting a Claim shall deliver it directly to the other party to the Contract promptly (but in no event later than 30 days) after the start of the event giving rise thereto; in the case of appeals regarding Change Proposals within 30 days of the decision under appeal. The party submitting the Claim shall also furnish a copy to the Engineer, for its information only. The responsibility to substantiate a Claim rests with the party making the Claim. In the case of a Claim by Contractor seeking an increase in the Contract Times or Contract Price, Contractor shall certify that the Claim is made in good faith, that the supporting data are accurate and complete, and that to the best of Contractor's knowledge and belief the amount of time or money requested accurately reflects the full amount to which Contractor is entitled.

C. *Review and Resolution*: The party receiving a Claim shall review it thoroughly, giving full consideration to its merits. The two parties shall seek to resolve the Claim through the exchange of information and direct negotiations. The parties may extend the time for resolving the Claim by mutual agreement. All actions taken on a Claim will be stated in writing and submitted to the other party, with a copy to Engineer.

D. *Mediation*

1. At any time after initiation of a Claim, Owner and Contractor may mutually agree to mediation of the underlying dispute. The agreement to mediate will stay the Claim submittal and response process.

2. If Owner and Contractor agree to mediation, then after 60 days from such agreement, either Owner or Contractor may unilaterally terminate the mediation process, and the Claim submittal and decision process will resume as of the date of the termination. If the mediation proceeds but is unsuccessful in resolving the dispute, the Claim submittal and decision process will resume as of the date of the conclusion of the mediation, as determined by the mediator.

3. Owner and Contractor shall each pay one-half of the mediator's fees and costs.

E. *Partial Approval*: If the party receiving a Claim approves the Claim in part and denies it in part, such action will be final and binding unless within 30 days of such action the other party invokes the procedure set forth in Article 17 for final resolution of disputes.

F. *Denial of Claim*: If efforts to resolve a Claim are not successful, the party receiving the Claim may deny it by giving written notice of denial to the other party. If the receiving party does not take action on the Claim within 90 days, then either Owner or Contractor may at any time thereafter submit a letter to the other party indicating that as a result of the inaction, the Claim is deemed denied, thereby commencing the time for appeal of the denial. A denial of the Claim will be final and binding unless within 30 days of the denial the other party invokes the procedure set forth in Article 17 for the final resolution of disputes.

Copyright© 2018 National Society of Professional Engineers, American Council of Engineering Companies, and American Society of Civil Engineers. All rights reserved.

G. *Final and Binding Results*: If the parties reach a mutual agreement regarding a Claim, whether through approval of the Claim, direct negotiations, mediation, or otherwise; or if a Claim is approved in part and denied in part, or denied in full, and such actions become final and binding; then the results of the agreement or action on the Claim will be incorporated in a Change Order or other written document to the extent they affect the Contract, including the Work, the Contract Times, or the Contract Price.

ARTICLE 13—COST OF THE WORK; ALLOWANCES; UNIT PRICE WORK

13.01 *Cost of the Work*

A. *Purposes for Determination of Cost of the Work*: The term Cost of the Work means the sum of all costs necessary for the proper performance of the Work at issue, as further defined below. The provisions of this Paragraph 13.01 are used for two distinct purposes:

1. To determine Cost of the Work when Cost of the Work is a component of the Contract Price, under cost-plus-fee, time-and-materials, or other cost-based terms; or

2. When needed to determine the value of a Change Order, Change Proposal, Claim, set-off, or other adjustment in Contract Price. When the value of any such adjustment is determined on the basis of Cost of the Work, Contractor is entitled only to those additional or incremental costs required because of the change in the Work or because of the event giving rise to the adjustment.

B. *Costs Included*: Except as otherwise may be agreed to in writing by Owner, costs included in the Cost of the Work will be in amounts no higher than those commonly incurred in the locality of the Project, will not include any of the costs itemized in Paragraph 13.01.C, and will include only the following items:

1. Payroll costs for employees in the direct employ of Contractor in the performance of the Work under schedules of job classifications agreed upon by Owner and Contractor in advance of the subject Work. Such employees include, without limitation, superintendents, foremen, safety managers, safety representatives, and other personnel employed full time on the Work. Payroll costs for employees not employed full time on the Work will be apportioned on the basis of their time spent on the Work. Payroll costs include, but are not limited to, salaries and wages plus the cost of fringe benefits, which include social security contributions, unemployment, excise, and payroll taxes, workers' compensation, health and retirement benefits, sick leave, and vacation and holiday pay applicable thereto. The expenses of performing Work outside of regular working hours, on Saturday, Sunday, or legal holidays, will be included in the above to the extent authorized by Owner.

2. Cost of all materials and equipment furnished and incorporated in the Work, including costs of transportation and storage thereof, and Suppliers' field services required in connection therewith. All cash discounts accrue to Contractor unless Owner deposits funds with Contractor with which to make payments, in which case the cash discounts will accrue to Owner. All trade discounts, rebates, and refunds and returns from sale of surplus materials and equipment will accrue to Owner, and Contractor shall make provisions so that they may be obtained.

3. Payments made by Contractor to Subcontractors for Work performed by Subcontractors. If required by Owner, Contractor shall obtain competitive bids from subcontractors

Copyright© 2018 National Society of Professional Engineers, American Council of Engineering Companies, and American Society of Civil Engineers. All rights reserved.

acceptable to Owner and Contractor and shall deliver such bids to Owner, which will then determine, with the advice of Engineer, which bids, if any, will be acceptable. If any subcontract provides that the Subcontractor is to be paid on the basis of Cost of the Work plus a fee, the Subcontractor's Cost of the Work and fee will be determined in the same manner as Contractor's Cost of the Work and fee as provided in this Paragraph 13.01.

4. Costs of special consultants (including but not limited to engineers, architects, testing laboratories, surveyors, attorneys, and accountants) employed or retained for services specifically related to the Work.

5. Other costs consisting of the following:

    a. The proportion of necessary transportation, travel, and subsistence expenses of Contractor's employees incurred in discharge of duties connected with the Work.

    b. Cost, including transportation and maintenance, of all materials, supplies, equipment, machinery, appliances, office, and temporary facilities at the Site, which are consumed in the performance of the Work, and cost, less market value, of such items used but not consumed which remain the property of Contractor.

        1) In establishing included costs for materials such as scaffolding, plating, or sheeting, consideration will be given to the actual or the estimated life of the material for use on other projects; or rental rates may be established on the basis of purchase or salvage value of such items, whichever is less. Contractor will not be eligible for compensation for such items in an amount that exceeds the purchase cost of such item.

    c. *Construction Equipment Rental*

        1) Rentals of all construction equipment and machinery, and the parts thereof, in accordance with rental agreements approved by Owner as to price (including any surcharge or special rates applicable to overtime use of the construction equipment or machinery), and the costs of transportation, loading, unloading, assembly, dismantling, and removal thereof. All such costs will be in accordance with the terms of said rental agreements. The rental of any such equipment, machinery, or parts must cease when the use thereof is no longer necessary for the Work.

        2) Costs for equipment and machinery owned by Contractor or a Contractor-related entity will be paid at a rate shown for such equipment in the equipment rental rate book specified in the Supplementary Conditions. An hourly rate will be computed by dividing the monthly rates by 176. These computed rates will include all operating costs.

        3) With respect to Work that is the result of a Change Order, Change Proposal, Claim, set-off, or other adjustment in Contract Price ("changed Work"), included costs will be based on the time the equipment or machinery is in use on the changed Work and the costs of transportation, loading, unloading, assembly, dismantling, and removal when directly attributable to the changed Work. The cost of any such equipment or machinery, or parts thereof, must cease to accrue when the use thereof is no longer necessary for the changed Work.

Copyright© 2018 National Society of Professional Engineers, American Council of Engineering Companies, and American Society of Civil Engineers. All rights reserved.

d. Sales, consumer, use, and other similar taxes related to the Work, and for which Contractor is liable, as imposed by Laws and Regulations.

e. Deposits lost for causes other than negligence of Contractor, any Subcontractor, or anyone directly or indirectly employed by any of them or for whose acts any of them may be liable, and royalty payments and fees for permits and licenses.

f. Losses and damages (and related expenses) caused by damage to the Work, not compensated by insurance or otherwise, sustained by Contractor in connection with the performance of the Work (except losses and damages within the deductible amounts of builder's risk or other property insurance established in accordance with Paragraph 6.04), provided such losses and damages have resulted from causes other than the negligence of Contractor, any Subcontractor, or anyone directly or indirectly employed by any of them or for whose acts any of them may be liable. Such losses include settlements made with the written consent and approval of Owner. No such losses, damages, and expenses will be included in the Cost of the Work for the purpose of determining Contractor's fee.

g. The cost of utilities, fuel, and sanitary facilities at the Site.

h. Minor expenses such as communication service at the Site, express and courier services, and similar petty cash items in connection with the Work.

i. The costs of premiums for all bonds and insurance that Contractor is required by the Contract Documents to purchase and maintain.

C. *Costs Excluded*: The term Cost of the Work does not include any of the following items:

1. Payroll costs and other compensation of Contractor's officers, executives, principals, general managers, engineers, architects, estimators, attorneys, auditors, accountants, purchasing and contracting agents, expediters, timekeepers, clerks, and other personnel employed by Contractor, whether at the Site or in Contractor's principal or branch office for general administration of the Work and not specifically included in the agreed upon schedule of job classifications referred to in Paragraph 13.01.B.1 or specifically covered by Paragraph 13.01.B.4. The payroll costs and other compensation excluded here are to be considered administrative costs covered by the Contractor's fee.

2. The cost of purchasing, renting, or furnishing small tools and hand tools.

3. Expenses of Contractor's principal and branch offices other than Contractor's office at the Site.

4. Any part of Contractor's capital expenses, including interest on Contractor's capital employed for the Work and charges against Contractor for delinquent payments.

5. Costs due to the negligence of Contractor, any Subcontractor, or anyone directly or indirectly employed by any of them or for whose acts any of them may be liable, including but not limited to, the correction of defective Work, disposal of materials or equipment wrongly supplied, and making good any damage to property.

6. Expenses incurred in preparing and advancing Claims.

7. Other overhead or general expense costs of any kind and the costs of any item not specifically and expressly included in Paragraph 13.01.B.

Copyright© 2018 National Society of Professional Engineers, American Council of Engineering Companies, and American Society of Civil Engineers. All rights reserved.

D. *Contractor's Fee*

1. When the Work as a whole is performed on the basis of cost-plus-a-fee, then:

a. Contractor's fee for the Work set forth in the Contract Documents as of the Effective Date of the Contract will be determined as set forth in the Agreement.

b. for any Work covered by a Change Order, Change Proposal, Claim, set-off, or other adjustment in Contract Price on the basis of Cost of the Work, Contractor's fee will be determined as follows:

1) When the fee for the Work as a whole is a percentage of the Cost of the Work, the fee will automatically adjust as the Cost of the Work changes.

2) When the fee for the Work as a whole is a fixed fee, the fee for any additions or deletions will be determined in accordance with Paragraph 11.07.C.2.

2. When the Work as a whole is performed on the basis of a stipulated sum, or any other basis other than cost-plus-a-fee, then Contractor's fee for any Work covered by a Change Order, Change Proposal, Claim, set-off, or other adjustment in Contract Price on the basis of Cost of the Work will be determined in accordance with Paragraph 11.07.C.2.

E. *Documentation and Audit*: Whenever the Cost of the Work for any purpose is to be determined pursuant to this Article 13, Contractor and pertinent Subcontractors will establish and maintain records of the costs in accordance with generally accepted accounting practices. Subject to prior written notice, Owner will be afforded reasonable access, during normal business hours, to all Contractor's accounts, records, books, correspondence, instructions, drawings, receipts, vouchers, memoranda, and similar data relating to the Cost of the Work and Contractor's fee. Contractor shall preserve all such documents for a period of three years after the final payment by Owner. Pertinent Subcontractors will afford such access to Owner, and preserve such documents, to the same extent required of Contractor.

13.02 *Allowances*

A. It is understood that Contractor has included in the Contract Price all allowances so named in the Contract Documents and shall cause the Work so covered to be performed for such sums and by such persons or entities as may be acceptable to Owner and Engineer.

B. *Cash Allowances*: Contractor agrees that:

1. the cash allowances include the cost to Contractor (less any applicable trade discounts) of materials and equipment required by the allowances to be delivered at the Site, and all applicable taxes; and

2. Contractor's costs for unloading and handling on the Site, labor, installation, overhead, profit, and other expenses contemplated for the cash allowances have been included in the Contract Price and not in the allowances, and no demand for additional payment for any of the foregoing will be valid.

C. *Owner's Contingency Allowance*: Contractor agrees that an Owner's contingency allowance, if any, is for the sole use of Owner to cover unanticipated costs.

D. Prior to final payment, an appropriate Change Order will be issued as recommended by Engineer to reflect actual amounts due Contractor for Work covered by allowances, and the Contract Price will be correspondingly adjusted.

Copyright© 2018 National Society of Professional Engineers, American Council of Engineering Companies, and American Society of Civil Engineers. All rights reserved.

13.03 *Unit Price Work*

A. Where the Contract Documents provide that all or part of the Work is to be Unit Price Work, initially the Contract Price will be deemed to include for all Unit Price Work an amount equal to the sum of the unit price for each separately identified item of Unit Price Work times the estimated quantity of each item as indicated in the Agreement.

B. The estimated quantities of items of Unit Price Work are not guaranteed and are solely for the purpose of comparison of Bids and determining an initial Contract Price. Payments to Contractor for Unit Price Work will be based on actual quantities.

C. Each unit price will be deemed to include an amount considered by Contractor to be adequate to cover Contractor's overhead and profit for each separately identified item.

D. Engineer will determine the actual quantities and classifications of Unit Price Work performed by Contractor. Engineer will review with Contractor the Engineer's preliminary determinations on such matters before rendering a written decision thereon (by recommendation of an Application for Payment or otherwise). Engineer's written decision thereon will be final and binding (except as modified by Engineer to reflect changed factual conditions or more accurate data) upon Owner and Contractor, and the final adjustment of Contract Price will be set forth in a Change Order, subject to the provisions of the following paragraph.

E. *Adjustments in Unit Price*

1. Contractor or Owner shall be entitled to an adjustment in the unit price with respect to an item of Unit Price Work if:

    a. the quantity of the item of Unit Price Work performed by Contractor differs materially and significantly from the estimated quantity of such item indicated in the Agreement; and

    b. Contractor's unit costs to perform the item of Unit Price Work have changed materially and significantly as a result of the quantity change.

2. The adjustment in unit price will account for and be coordinated with any related changes in quantities of other items of Work, and in Contractor's costs to perform such other Work, such that the resulting overall change in Contract Price is equitable to Owner and Contractor.

3. Adjusted unit prices will apply to all units of that item.

ARTICLE 14—TESTS AND INSPECTIONS; CORRECTION, REMOVAL, OR ACCEPTANCE OF DEFECTIVE WORK

14.01 *Access to Work*

A. Owner, Engineer, their consultants and other representatives and personnel of Owner, independent testing laboratories, and authorities having jurisdiction have access to the Site and the Work at reasonable times for their observation, inspection, and testing. Contractor shall provide them proper and safe conditions for such access and advise them of Contractor's safety procedures and programs so that they may comply with such procedures and programs as applicable.

Copyright© 2018 National Society of Professional Engineers, American Council of Engineering Companies, and American Society of Civil Engineers. All rights reserved.

14.02 *Tests, Inspections, and Approvals*

A. Contractor shall give Engineer timely notice of readiness of the Work (or specific parts thereof) for all required inspections and tests, and shall cooperate with inspection and testing personnel to facilitate required inspections and tests.

B. Owner shall retain and pay for the services of an independent inspector, testing laboratory, or other qualified individual or entity to perform all inspections and tests expressly required by the Contract Documents to be furnished and paid for by Owner, except that costs incurred in connection with tests or inspections of covered Work will be governed by the provisions of Paragraph 14.05.

C. If Laws or Regulations of any public body having jurisdiction require any Work (or part thereof) specifically to be inspected, tested, or approved by an employee or other representative of such public body, Contractor shall assume full responsibility for arranging and obtaining such inspections, tests, or approvals, pay all costs in connection therewith, and furnish Engineer the required certificates of inspection or approval.

D. Contractor shall be responsible for arranging, obtaining, and paying for all inspections and tests required:

1. by the Contract Documents, unless the Contract Documents expressly allocate responsibility for a specific inspection or test to Owner;

2. to attain Owner's and Engineer's acceptance of materials or equipment to be incorporated in the Work;

3. by manufacturers of equipment furnished under the Contract Documents;

4. for testing, adjusting, and balancing of mechanical, electrical, and other equipment to be incorporated into the Work; and

5. for acceptance of materials, mix designs, or equipment submitted for approval prior to Contractor's purchase thereof for incorporation in the Work.

Such inspections and tests will be performed by independent inspectors, testing laboratories, or other qualified individuals or entities acceptable to Owner and Engineer.

E. If the Contract Documents require the Work (or part thereof) to be approved by Owner, Engineer, or another designated individual or entity, then Contractor shall assume full responsibility for arranging and obtaining such approvals.

F. If any Work (or the work of others) that is to be inspected, tested, or approved is covered by Contractor without written concurrence of Engineer, Contractor shall, if requested by Engineer, uncover such Work for observation. Such uncovering will be at Contractor's expense unless Contractor had given Engineer timely notice of Contractor's intention to cover the same and Engineer had not acted with reasonable promptness in response to such notice.

14.03 *Defective Work*

A. *Contractor's Obligation*: It is Contractor's obligation to assure that the Work is not defective.

B. *Engineer's Authority*: Engineer has the authority to determine whether Work is defective, and to reject defective Work.

Copyright© 2018 National Society of Professional Engineers, American Council of Engineering Companies, and American Society of Civil Engineers. All rights reserved.

C. *Notice of Defects*: Prompt written notice of all defective Work of which Owner or Engineer has actual knowledge will be given to Contractor.

D. *Correction, or Removal and Replacement*: Promptly after receipt of written notice of defective Work, Contractor shall correct all such defective Work, whether or not fabricated, installed, or completed, or, if Engineer has rejected the defective Work, remove it from the Project and replace it with Work that is not defective.

E. *Preservation of Warranties*: When correcting defective Work, Contractor shall take no action that would void or otherwise impair Owner's special warranty and guarantee, if any, on said Work.

F. *Costs and Damages*: In addition to its correction, removal, and replacement obligations with respect to defective Work, Contractor shall pay all claims, costs, losses, and damages arising out of or relating to defective Work, including but not limited to the cost of the inspection, testing, correction, removal, replacement, or reconstruction of such defective Work, fines levied against Owner by governmental authorities because the Work is defective, and the costs of repair or replacement of work of others resulting from defective Work. Prior to final payment, if Owner and Contractor are unable to agree as to the measure of such claims, costs, losses, and damages resulting from defective Work, then Owner may impose a reasonable set-off against payments due under Article 15.

14.04 *Acceptance of Defective Work*

A. If, instead of requiring correction or removal and replacement of defective Work, Owner prefers to accept it, Owner may do so (subject, if such acceptance occurs prior to final payment, to Engineer's confirmation that such acceptance is in general accord with the design intent and applicable engineering principles, and will not endanger public safety). Contractor shall pay all claims, costs, losses, and damages attributable to Owner's evaluation of and determination to accept such defective Work (such costs to be approved by Engineer as to reasonableness), and for the diminished value of the Work to the extent not otherwise paid by Contractor. If any such acceptance occurs prior to final payment, the necessary revisions in the Contract Documents with respect to the Work will be incorporated in a Change Order. If the parties are unable to agree as to the decrease in the Contract Price, reflecting the diminished value of Work so accepted, then Owner may impose a reasonable set-off against payments due under Article 15. If the acceptance of defective Work occurs after final payment, Contractor shall pay an appropriate amount to Owner.

14.05 *Uncovering Work*

A. Engineer has the authority to require additional inspection or testing of the Work, whether or not the Work is fabricated, installed, or completed.

B. If any Work is covered contrary to the written request of Engineer, then Contractor shall, if requested by Engineer, uncover such Work for Engineer's observation, and then replace the covering, all at Contractor's expense.

C. If Engineer considers it necessary or advisable that covered Work be observed by Engineer or inspected or tested by others, then Contractor, at Engineer's request, shall uncover, expose, or otherwise make available for observation, inspection, or testing as Engineer may require, that portion of the Work in question, and provide all necessary labor, material, and equipment.

Copyright© 2018 National Society of Professional Engineers, American Council of Engineering Companies, and American Society of Civil Engineers. All rights reserved.

1. If it is found that the uncovered Work is defective, Contractor shall be responsible for all claims, costs, losses, and damages arising out of or relating to such uncovering, exposure, observation, inspection, and testing, and of satisfactory replacement or reconstruction (including but not limited to all costs of repair or replacement of work of others); and pending Contractor's full discharge of this responsibility the Owner shall be entitled to impose a reasonable set-off against payments due under Article 15.

2. If the uncovered Work is not found to be defective, Contractor shall be allowed an increase in the Contract Price or an extension of the Contract Times, directly attributable to such uncovering, exposure, observation, inspection, testing, replacement, and reconstruction. If the parties are unable to agree as to the amount or extent thereof, then Contractor may submit a Change Proposal within 30 days of the determination that the Work is not defective.

14.06 *Owner May Stop the Work*

A. If the Work is defective, or Contractor fails to supply sufficient skilled workers or suitable materials or equipment, or fails to perform the Work in such a way that the completed Work will conform to the Contract Documents, then Owner may order Contractor to stop the Work, or any portion thereof, until the cause for such order has been eliminated; however, this right of Owner to stop the Work will not give rise to any duty on the part of Owner to exercise this right for the benefit of Contractor, any Subcontractor, any Supplier, any other individual or entity, or any surety for, or employee or agent of any of them.

14.07 *Owner May Correct Defective Work*

A. If Contractor fails within a reasonable time after written notice from Engineer to correct defective Work, or to remove and replace defective Work as required by Engineer, then Owner may, after 7 days' written notice to Contractor, correct or remedy any such deficiency.

B. In exercising the rights and remedies under this Paragraph 14.07, Owner shall proceed expeditiously. In connection with such corrective or remedial action, Owner may exclude Contractor from all or part of the Site, take possession of all or part of the Work and suspend Contractor's services related thereto, and incorporate in the Work all materials and equipment stored at the Site or for which Owner has paid Contractor but which are stored elsewhere. Contractor shall allow Owner, Owner's representatives, agents and employees, Owner's other contractors, and Engineer and Engineer's consultants access to the Site to enable Owner to exercise the rights and remedies under this paragraph.

C. All claims, costs, losses, and damages incurred or sustained by Owner in exercising the rights and remedies under this Paragraph 14.07 will be charged against Contractor as set-offs against payments due under Article 15. Such claims, costs, losses and damages will include but not be limited to all costs of repair, or replacement of work of others destroyed or damaged by correction, removal, or replacement of Contractor's defective Work.

D. Contractor shall not be allowed an extension of the Contract Times because of any delay in the performance of the Work attributable to the exercise by Owner of Owner's rights and remedies under this Paragraph 14.07.

Copyright© 2018 National Society of Professional Engineers, American Council of Engineering Companies, and American Society of Civil Engineers. All rights reserved.

ARTICLE 15—PAYMENTS TO CONTRACTOR; SET-OFFS; COMPLETION; CORRECTION PERIOD

15.01 *Progress Payments*

A. *Basis for Progress Payments*: The Schedule of Values established as provided in Article 2 will serve as the basis for progress payments and will be incorporated into a form of Application for Payment acceptable to Engineer. Progress payments for Unit Price Work will be based on the number of units completed during the pay period, as determined under the provisions of Paragraph 13.03. Progress payments for cost-based Work will be based on Cost of the Work completed by Contractor during the pay period.

B. *Applications for Payments*

1. At least 20 days before the date established in the Agreement for each progress payment (but not more often than once a month), Contractor shall submit to Engineer for review an Application for Payment filled out and signed by Contractor covering the Work completed as of the date of the Application and accompanied by such supporting documentation as is required by the Contract Documents.

2. If payment is requested on the basis of materials and equipment not incorporated in the Work but delivered and suitably stored at the Site or at another location agreed to in writing, the Application for Payment must also be accompanied by: (a) a bill of sale, invoice, copies of subcontract or purchase order payments, or other documentation establishing full payment by Contractor for the materials and equipment; (b) at Owner's request, documentation warranting that Owner has received the materials and equipment free and clear of all Liens; and (c) evidence that the materials and equipment are covered by appropriate property insurance, a warehouse bond, or other arrangements to protect Owner's interest therein, all of which must be satisfactory to Owner.

3. Beginning with the second Application for Payment, each Application must include an affidavit of Contractor stating that all previous progress payments received by Contractor have been applied to discharge Contractor's legitimate obligations associated with prior Applications for Payment.

4. The amount of retainage with respect to progress payments will be as stipulated in the Agreement.

C. *Review of Applications*

1. Engineer will, within 10 days after receipt of each Application for Payment, including each resubmittal, either indicate in writing a recommendation of payment and present the Application to Owner, or return the Application to Contractor indicating in writing Engineer's reasons for refusing to recommend payment. In the latter case, Contractor may make the necessary corrections and resubmit the Application.

2. Engineer's recommendation of any payment requested in an Application for Payment will constitute a representation by Engineer to Owner, based on Engineer's observations of the executed Work as an experienced and qualified design professional, and on Engineer's review of the Application for Payment and the accompanying data and schedules, that to the best of Engineer's knowledge, information and belief:

a. the Work has progressed to the point indicated;

Copyright© 2018 National Society of Professional Engineers, American Council of Engineering Companies, and American Society of Civil Engineers. All rights reserved.

b. the quality of the Work is generally in accordance with the Contract Documents (subject to an evaluation of the Work as a functioning whole prior to or upon Substantial Completion, the results of any subsequent tests called for in the Contract Documents, a final determination of quantities and classifications for Unit Price Work under Paragraph 13.03, and any other qualifications stated in the recommendation); and

c. the conditions precedent to Contractor's being entitled to such payment appear to have been fulfilled in so far as it is Engineer's responsibility to observe the Work.

3. By recommending any such payment Engineer will not thereby be deemed to have represented that:

   a. inspections made to check the quality or the quantity of the Work as it has been performed have been exhaustive, extended to every aspect of the Work in progress, or involved detailed inspections of the Work beyond the responsibilities specifically assigned to Engineer in the Contract; or

   b. there may not be other matters or issues between the parties that might entitle Contractor to be paid additionally by Owner or entitle Owner to withhold payment to Contractor.

4. Neither Engineer's review of Contractor's Work for the purposes of recommending payments nor Engineer's recommendation of any payment, including final payment, will impose responsibility on Engineer:

   a. to supervise, direct, or control the Work;

   b. for the means, methods, techniques, sequences, or procedures of construction, or the safety precautions and programs incident thereto;

   c. for Contractor's failure to comply with Laws and Regulations applicable to Contractor's performance of the Work;

   d. to make any examination to ascertain how or for what purposes Contractor has used the money paid by Owner; or

   e. to determine that title to any of the Work, materials, or equipment has passed to Owner free and clear of any Liens.

5. Engineer may refuse to recommend the whole or any part of any payment if, in Engineer's opinion, it would be incorrect to make the representations to Owner stated in Paragraph 15.01.C.2.

6. Engineer will recommend reductions in payment (set-offs) necessary in Engineer's opinion to protect Owner from loss because:

   a. the Work is defective, requiring correction or replacement;

   b. the Contract Price has been reduced by Change Orders;

   c. Owner has been required to correct defective Work in accordance with Paragraph 14.07, or has accepted defective Work pursuant to Paragraph 14.04;

   d. Owner has been required to remove or remediate a Hazardous Environmental Condition for which Contractor is responsible; or

Copyright© 2018 National Society of Professional Engineers, American Council of Engineering Companies, and American Society of Civil Engineers. All rights reserved.

e. Engineer has actual knowledge of the occurrence of any of the events that would constitute a default by Contractor and therefore justify termination for cause under the Contract Documents.

D. *Payment Becomes Due*

1. Ten days after presentation of the Application for Payment to Owner with Engineer's recommendation, the amount recommended (subject to any Owner set-offs) will become due, and when due will be paid by Owner to Contractor.

E. *Reductions in Payment by Owner*

1. In addition to any reductions in payment (set-offs) recommended by Engineer, Owner is entitled to impose a set-off against payment based on any of the following:

a. Claims have been made against Owner based on Contractor's conduct in the performance or furnishing of the Work, or Owner has incurred costs, losses, or damages resulting from Contractor's conduct in the performance or furnishing of the Work, including but not limited to claims, costs, losses, or damages from workplace injuries, adjacent property damage, non-compliance with Laws and Regulations, and patent infringement;

b. Contractor has failed to take reasonable and customary measures to avoid damage, delay, disruption, and interference with other work at or adjacent to the Site;

c. Contractor has failed to provide and maintain required bonds or insurance;

d. Owner has been required to remove or remediate a Hazardous Environmental Condition for which Contractor is responsible;

e. Owner has incurred extra charges or engineering costs related to submittal reviews, evaluations of proposed substitutes, tests and inspections, or return visits to manufacturing or assembly facilities;

f. The Work is defective, requiring correction or replacement;

g. Owner has been required to correct defective Work in accordance with Paragraph 14.07, or has accepted defective Work pursuant to Paragraph 14.04;

h. The Contract Price has been reduced by Change Orders;

i. An event has occurred that would constitute a default by Contractor and therefore justify a termination for cause;

j. Liquidated or other damages have accrued as a result of Contractor's failure to achieve Milestones, Substantial Completion, or final completion of the Work;

k. Liens have been filed in connection with the Work, except where Contractor has delivered a specific bond satisfactory to Owner to secure the satisfaction and discharge of such Liens; or

l. Other items entitle Owner to a set-off against the amount recommended.

2. If Owner imposes any set-off against payment, whether based on its own knowledge or on the written recommendations of Engineer, Owner will give Contractor immediate written notice (with a copy to Engineer) stating the reasons for such action and the specific amount of the reduction, and promptly pay Contractor any amount remaining

Copyright© 2018 National Society of Professional Engineers, American Council of Engineering Companies, and American Society of Civil Engineers. All rights reserved.

after deduction of the amount so withheld. Owner shall promptly pay Contractor the amount so withheld, or any adjustment thereto agreed to by Owner and Contractor, if Contractor remedies the reasons for such action. The reduction imposed will be binding on Contractor unless it duly submits a Change Proposal contesting the reduction.

3. Upon a subsequent determination that Owner's refusal of payment was not justified, the amount wrongfully withheld will be treated as an amount due as determined by Paragraph 15.01.D.1 and subject to interest as provided in the Agreement.

15.02 *Contractor's Warranty of Title*

A. Contractor warrants and guarantees that title to all Work, materials, and equipment furnished under the Contract will pass to Owner free and clear of (1) all Liens and other title defects, and (2) all patent, licensing, copyright, or royalty obligations, no later than 7 days after the time of payment by Owner.

15.03 *Substantial Completion*

A. When Contractor considers the entire Work ready for its intended use Contractor shall notify Owner and Engineer in writing that the entire Work is substantially complete and request that Engineer issue a certificate of Substantial Completion. Contractor shall at the same time submit to Owner and Engineer an initial draft of punch list items to be completed or corrected before final payment.

B. Promptly after Contractor's notification, Owner, Contractor, and Engineer shall make an inspection of the Work to determine the status of completion. If Engineer does not consider the Work substantially complete, Engineer will notify Contractor in writing giving the reasons therefor.

C. If Engineer considers the Work substantially complete, Engineer will deliver to Owner a preliminary certificate of Substantial Completion which will fix the date of Substantial Completion. Engineer shall attach to the certificate a punch list of items to be completed or corrected before final payment. Owner shall have 7 days after receipt of the preliminary certificate during which to make written objection to Engineer as to any provisions of the certificate or attached punch list. If, after considering the objections to the provisions of the preliminary certificate, Engineer concludes that the Work is not substantially complete, Engineer will, within 14 days after submission of the preliminary certificate to Owner, notify Contractor in writing that the Work is not substantially complete, stating the reasons therefor. If Owner does not object to the provisions of the certificate, or if despite consideration of Owner's objections Engineer concludes that the Work is substantially complete, then Engineer will, within said 14 days, execute and deliver to Owner and Contractor a final certificate of Substantial Completion (with a revised punch list of items to be completed or corrected) reflecting such changes from the preliminary certificate as Engineer believes justified after consideration of any objections from Owner.

D. At the time of receipt of the preliminary certificate of Substantial Completion, Owner and Contractor will confer regarding Owner's use or occupancy of the Work following Substantial Completion, review the builder's risk insurance policy with respect to the end of the builder's risk coverage, and confirm the transition to coverage of the Work under a permanent property insurance policy held by Owner. Unless Owner and Contractor agree otherwise in writing, Owner shall bear responsibility for security, operation, protection of the Work,

Copyright© 2018 National Society of Professional Engineers, American Council of Engineering Companies, and American Society of Civil Engineers. All rights reserved.

property insurance, maintenance, heat, and utilities upon Owner's use or occupancy of the Work.

E. After Substantial Completion the Contractor shall promptly begin work on the punch list of items to be completed or corrected prior to final payment. In appropriate cases Contractor may submit monthly Applications for Payment for completed punch list items, following the progress payment procedures set forth above.

F. Owner shall have the right to exclude Contractor from the Site after the date of Substantial Completion subject to allowing Contractor reasonable access to remove its property and complete or correct items on the punch list.

15.04 *Partial Use or Occupancy*

A. Prior to Substantial Completion of all the Work, Owner may use or occupy any substantially completed part of the Work which has specifically been identified in the Contract Documents, or which Owner, Engineer, and Contractor agree constitutes a separately functioning and usable part of the Work that can be used by Owner for its intended purpose without significant interference with Contractor's performance of the remainder of the Work, subject to the following conditions:

1. At any time, Owner may request in writing that Contractor permit Owner to use or occupy any such part of the Work that Owner believes to be substantially complete. If and when Contractor agrees that such part of the Work is substantially complete, Contractor, Owner, and Engineer will follow the procedures of Paragraph 15.03.A through 15.03.E for that part of the Work.

2. At any time, Contractor may notify Owner and Engineer in writing that Contractor considers any such part of the Work substantially complete and request Engineer to issue a certificate of Substantial Completion for that part of the Work.

3. Within a reasonable time after either such request, Owner, Contractor, and Engineer shall make an inspection of that part of the Work to determine its status of completion. If Engineer does not consider that part of the Work to be substantially complete, Engineer will notify Owner and Contractor in writing giving the reasons therefor. If Engineer considers that part of the Work to be substantially complete, the provisions of Paragraph 15.03 will apply with respect to certification of Substantial Completion of that part of the Work and the division of responsibility in respect thereof and access thereto.

4. No use or occupancy or separate operation of part of the Work may occur prior to compliance with the requirements of Paragraph 6.04 regarding builder's risk or other property insurance.

15.05 *Final Inspection*

A. Upon written notice from Contractor that the entire Work or an agreed portion thereof is complete, Engineer will promptly make a final inspection with Owner and Contractor and will notify Contractor in writing of all particulars in which this inspection reveals that the Work, or agreed portion thereof, is incomplete or defective. Contractor shall immediately take such measures as are necessary to complete such Work or remedy such deficiencies.

Copyright© 2018 National Society of Professional Engineers, American Council of Engineering Companies, and American Society of Civil Engineers. All rights reserved.

15.06 *Final Payment*

A. *Application for Payment*

1. After Contractor has, in the opinion of Engineer, satisfactorily completed all corrections identified during the final inspection and has delivered, in accordance with the Contract Documents, all maintenance and operating instructions, schedules, guarantees, bonds, certificates or other evidence of insurance, certificates of inspection, annotated record documents (as provided in Paragraph 7.12), and other documents, Contractor may make application for final payment.

2. The final Application for Payment must be accompanied (except as previously delivered) by:

a. all documentation called for in the Contract Documents;

b. consent of the surety, if any, to final payment;

c. satisfactory evidence that all title issues have been resolved such that title to all Work, materials, and equipment has passed to Owner free and clear of any Liens or other title defects, or will so pass upon final payment.

d. a list of all duly pending Change Proposals and Claims; and

e. complete and legally effective releases or waivers (satisfactory to Owner) of all Lien rights arising out of the Work, and of Liens filed in connection with the Work.

3. In lieu of the releases or waivers of Liens specified in Paragraph 15.06.A.2 and as approved by Owner, Contractor may furnish receipts or releases in full and an affidavit of Contractor that: (a) the releases and receipts include all labor, services, material, and equipment for which a Lien could be filed; and (b) all payrolls, material and equipment bills, and other indebtedness connected with the Work for which Owner might in any way be responsible, or which might in any way result in liens or other burdens on Owner's property, have been paid or otherwise satisfied. If any Subcontractor or Supplier fails to furnish such a release or receipt in full, Contractor may furnish a bond or other collateral satisfactory to Owner to indemnify Owner against any Lien, or Owner at its option may issue joint checks payable to Contractor and specified Subcontractors and Suppliers.

B. *Engineer's Review of Final Application and Recommendation of Payment*: If, on the basis of Engineer's observation of the Work during construction and final inspection, and Engineer's review of the final Application for Payment and accompanying documentation as required by the Contract Documents, Engineer is satisfied that the Work has been completed and Contractor's other obligations under the Contract have been fulfilled, Engineer will, within 10 days after receipt of the final Application for Payment, indicate in writing Engineer's recommendation of final payment and present the final Application for Payment to Owner for payment. Such recommendation will account for any set-offs against payment that are necessary in Engineer's opinion to protect Owner from loss for the reasons stated above with respect to progress payments. Otherwise, Engineer will return the Application for Payment to Contractor, indicating in writing the reasons for refusing to recommend final payment, in which case Contractor shall make the necessary corrections and resubmit the Application for Payment.

C. *Notice of Acceptability*: In support of its recommendation of payment of the final Application for Payment, Engineer will also give written notice to Owner and Contractor that the Work is

Copyright© 2018 National Society of Professional Engineers, American Council of Engineering Companies, and American Society of Civil Engineers. All rights reserved.

acceptable, subject to stated limitations in the notice and to the provisions of Paragraph 15.07.

D. *Completion of Work*: The Work is complete (subject to surviving obligations) when it is ready for final payment as established by the Engineer's written recommendation of final payment and issuance of notice of the acceptability of the Work.

E. *Final Payment Becomes Due*: Upon receipt from Engineer of the final Application for Payment and accompanying documentation, Owner shall set off against the amount recommended by Engineer for final payment any further sum to which Owner is entitled, including but not limited to set-offs for liquidated damages and set-offs allowed under the provisions of this Contract with respect to progress payments. Owner shall pay the resulting balance due to Contractor within 30 days of Owner's receipt of the final Application for Payment from Engineer.

15.07 *Waiver of Claims*

A. By making final payment, Owner waives its claim or right to liquidated damages or other damages for late completion by Contractor, except as set forth in an outstanding Claim, appeal under the provisions of Article 17, set-off, or express reservation of rights by Owner. Owner reserves all other claims or rights after final payment.

B. The acceptance of final payment by Contractor will constitute a waiver by Contractor of all claims and rights against Owner other than those pending matters that have been duly submitted as a Claim, or appealed under the provisions of Article 17.

15.08 *Correction Period*

A. If within one year after the date of Substantial Completion (or such longer period of time as may be prescribed by the Supplementary Conditions or the terms of any applicable special guarantee required by the Contract Documents), Owner gives Contractor written notice that any Work has been found to be defective, or that Contractor's repair of any damages to the Site or adjacent areas has been found to be defective, then after receipt of such notice of defect Contractor shall promptly, without cost to Owner and in accordance with Owner's written instructions:

1. correct the defective repairs to the Site or such adjacent areas;

2. correct such defective Work;

3. remove the defective Work from the Project and replace it with Work that is not defective, if the defective Work has been rejected by Owner, and

4. satisfactorily correct or repair or remove and replace any damage to other Work, to the work of others, or to other land or areas resulting from the corrective measures.

B. Owner shall give any such notice of defect within 60 days of the discovery that such Work or repairs is defective. If such notice is given within such 60 days but after the end of the correction period, the notice will be deemed a notice of defective Work under Paragraph 7.17.B.

C. If, after receipt of a notice of defect within 60 days and within the correction period, Contractor does not promptly comply with the terms of Owner's written instructions, or in an emergency where delay would cause serious risk of loss or damage, Owner may have the defective Work corrected or repaired or may have the rejected Work removed and replaced.

Copyright© 2018 National Society of Professional Engineers, American Council of Engineering Companies, and American Society of Civil Engineers. All rights reserved.

Contractor shall pay all costs, losses, and damages (including but not limited to all fees and charges of engineers, architects, attorneys, and other professionals and all court or arbitration or other dispute resolution costs) arising out of or relating to such correction or repair or such removal and replacement (including but not limited to all costs of repair or replacement of work of others). Contractor's failure to pay such costs, losses, and damages within 10 days of invoice from Owner will be deemed the start of an event giving rise to a Claim under Paragraph 12.01.B, such that any related Claim must be brought within 30 days of the failure to pay.

D. In special circumstances where a particular item of equipment is placed in continuous service before Substantial Completion of all the Work, the correction period for that item may start to run from an earlier date if so provided in the Specifications.

E. Where defective Work (and damage to other Work resulting therefrom) has been corrected or removed and replaced under this paragraph, the correction period hereunder with respect to such Work will be extended for an additional period of one year after such correction or removal and replacement has been satisfactorily completed.

F. Contractor's obligations under this paragraph are in addition to all other obligations and warranties. The provisions of this paragraph are not to be construed as a substitute for, or a waiver of, the provisions of any applicable statute of limitation or repose.

ARTICLE 16—SUSPENSION OF WORK AND TERMINATION

16.01 *Owner May Suspend Work*

A. At any time and without cause, Owner may suspend the Work or any portion thereof for a period of not more than 90 consecutive days by written notice to Contractor and Engineer. Such notice will fix the date on which Work will be resumed. Contractor shall resume the Work on the date so fixed. Contractor shall be entitled to an adjustment in the Contract Price or an extension of the Contract Times directly attributable to any such suspension. Any Change Proposal seeking such adjustments must be submitted no later than 30 days after the date fixed for resumption of Work.

16.02 *Owner May Terminate for Cause*

A. The occurrence of any one or more of the following events will constitute a default by Contractor and justify termination for cause:

1. Contractor's persistent failure to perform the Work in accordance with the Contract Documents (including, but not limited to, failure to supply sufficient skilled workers or suitable materials or equipment, or failure to adhere to the Progress Schedule);

2. Failure of Contractor to perform or otherwise to comply with a material term of the Contract Documents;

3. Contractor's disregard of Laws or Regulations of any public body having jurisdiction; or

4. Contractor's repeated disregard of the authority of Owner or Engineer.

Copyright© 2018 National Society of Professional Engineers, American Council of Engineering Companies, and American Society of Civil Engineers. All rights reserved.

B. If one or more of the events identified in Paragraph 16.02.A occurs, then after giving Contractor (and any surety) 10 days' written notice that Owner is considering a declaration that Contractor is in default and termination of the Contract, Owner may proceed to:

1. declare Contractor to be in default, and give Contractor (and any surety) written notice that the Contract is terminated; and

2. enforce the rights available to Owner under any applicable performance bond.

C. Subject to the terms and operation of any applicable performance bond, if Owner has terminated the Contract for cause, Owner may exclude Contractor from the Site, take possession of the Work, incorporate in the Work all materials and equipment stored at the Site or for which Owner has paid Contractor but which are stored elsewhere, and complete the Work as Owner may deem expedient.

D. Owner may not proceed with termination of the Contract under Paragraph 16.02.B if Contractor within 7 days of receipt of notice of intent to terminate begins to correct its failure to perform and proceeds diligently to cure such failure.

E. If Owner proceeds as provided in Paragraph 16.02.B, Contractor shall not be entitled to receive any further payment until the Work is completed. If the unpaid balance of the Contract Price exceeds the cost to complete the Work, including all related claims, costs, losses, and damages (including but not limited to all fees and charges of engineers, architects, attorneys, and other professionals) sustained by Owner, such excess will be paid to Contractor. If the cost to complete the Work including such related claims, costs, losses, and damages exceeds such unpaid balance, Contractor shall pay the difference to Owner. Such claims, costs, losses, and damages incurred by Owner will be reviewed by Engineer as to their reasonableness and, when so approved by Engineer, incorporated in a Change Order. When exercising any rights or remedies under this paragraph, Owner shall not be required to obtain the lowest price for the Work performed.

F. Where Contractor's services have been so terminated by Owner, the termination will not affect any rights or remedies of Owner against Contractor then existing or which may thereafter accrue, or any rights or remedies of Owner against Contractor or any surety under any payment bond or performance bond. Any retention or payment of money due Contractor by Owner will not release Contractor from liability.

G. If and to the extent that Contractor has provided a performance bond under the provisions of Paragraph 6.01.A, the provisions of that bond will govern over any inconsistent provisions of Paragraphs 16.02.B and 16.02.D.

16.03 *Owner May Terminate for Convenience*

A. Upon 7 days' written notice to Contractor and Engineer, Owner may, without cause and without prejudice to any other right or remedy of Owner, terminate the Contract. In such case, Contractor shall be paid for (without duplication of any items):

1. completed and acceptable Work executed in accordance with the Contract Documents prior to the effective date of termination, including fair and reasonable sums for overhead and profit on such Work;

2. expenses sustained prior to the effective date of termination in performing services and furnishing labor, materials, or equipment as required by the Contract Documents in

Copyright© 2018 National Society of Professional Engineers, American Council of Engineering Companies, and American Society of Civil Engineers. All rights reserved.

connection with uncompleted Work, plus fair and reasonable sums for overhead and profit on such expenses; and

3. other reasonable expenses directly attributable to termination, including costs incurred to prepare a termination for convenience cost proposal.

B. Contractor shall not be paid for any loss of anticipated profits or revenue, post-termination overhead costs, or other economic loss arising out of or resulting from such termination.

16.04 *Contractor May Stop Work or Terminate*

A. If, through no act or fault of Contractor, (1) the Work is suspended for more than 90 consecutive days by Owner or under an order of court or other public authority, or (2) Engineer fails to act on any Application for Payment within 30 days after it is submitted, or (3) Owner fails for 30 days to pay Contractor any sum finally determined to be due, then Contractor may, upon 7 days' written notice to Owner and Engineer, and provided Owner or Engineer do not remedy such suspension or failure within that time, terminate the contract and recover from Owner payment on the same terms as provided in Paragraph 16.03.

B. In lieu of terminating the Contract and without prejudice to any other right or remedy, if Engineer has failed to act on an Application for Payment within 30 days after it is submitted, or Owner has failed for 30 days to pay Contractor any sum finally determined to be due, Contractor may, 7 days after written notice to Owner and Engineer, stop the Work until payment is made of all such amounts due Contractor, including interest thereon. The provisions of this paragraph are not intended to preclude Contractor from submitting a Change Proposal for an adjustment in Contract Price or Contract Times or otherwise for expenses or damage directly attributable to Contractor's stopping the Work as permitted by this paragraph.

ARTICLE 17—FINAL RESOLUTION OF DISPUTES

17.01 *Methods and Procedures*

A. *Disputes Subject to Final Resolution*: The following disputed matters are subject to final resolution under the provisions of this article:

1. A timely appeal of an approval in part and denial in part of a Claim, or of a denial in full, pursuant to Article 12; and

2. Disputes between Owner and Contractor concerning the Work, or obligations under the Contract Documents, that arise after final payment has been made.

B. *Final Resolution of Disputes*: For any dispute subject to resolution under this article, Owner or Contractor may:

1. elect in writing to invoke the dispute resolution process provided for in the Supplementary Conditions;

2. agree with the other party to submit the dispute to another dispute resolution process; or

3. if no dispute resolution process is provided for in the Supplementary Conditions or mutually agreed to, give written notice to the other party of the intent to submit the dispute to a court of competent jurisdiction.

Copyright© 2018 National Society of Professional Engineers, American Council of Engineering Companies, and American Society of Civil Engineers. All rights reserved.

ARTICLE 18—MISCELLANEOUS

18.01 *Giving Notice*

A. Whenever any provision of the Contract requires the giving of written notice to Owner, Engineer, or Contractor, it will be deemed to have been validly given only if delivered:

1. in person, by a commercial courier service or otherwise, to the recipient's place of business;

2. by registered or certified mail, postage prepaid, to the recipient's place of business; or

3. by e-mail to the recipient, with the words "Formal Notice" or similar in the e-mail's subject line.

18.02 *Computation of Times*

A. When any period of time is referred to in the Contract by days, it will be computed to exclude the first and include the last day of such period. If the last day of any such period falls on a Saturday or Sunday or on a day made a legal holiday by the law of the applicable jurisdiction, such day will be omitted from the computation.

18.03 *Cumulative Remedies*

A. The duties and obligations imposed by these General Conditions and the rights and remedies available hereunder to the parties hereto are in addition to, and are not to be construed in any way as a limitation of, any rights and remedies available to any or all of them which are otherwise imposed or available by Laws or Regulations, by special warranty or guarantee, or by other provisions of the Contract. The provisions of this paragraph will be as effective as if repeated specifically in the Contract Documents in connection with each particular duty, obligation, right, and remedy to which they apply.

18.04 *Limitation of Damages*

A. With respect to any and all Change Proposals, Claims, disputes subject to final resolution, and other matters at issue, neither Owner nor Engineer, nor any of their officers, directors, members, partners, employees, agents, consultants, or subcontractors, shall be liable to Contractor for any claims, costs, losses, or damages sustained by Contractor on or in connection with any other project or anticipated project.

18.05 *No Waiver*

A. A party's non-enforcement of any provision will not constitute a waiver of that provision, nor will it affect the enforceability of that provision or of the remainder of this Contract.

18.06 *Survival of Obligations*

A. All representations, indemnifications, warranties, and guarantees made in, required by, or given in accordance with the Contract, as well as all continuing obligations indicated in the Contract, will survive final payment, completion, and acceptance of the Work or termination of the Contract or of the services of Contractor.

18.07 *Controlling Law*

A. This Contract is to be governed by the law of the state in which the Project is located.

Copyright© 2018 National Society of Professional Engineers, American Council of Engineering Companies, and American Society of Civil Engineers. All rights reserved.

18.08 *Assignment of Contract*

A. Unless expressly agreed to elsewhere in the Contract, no assignment by a party to this Contract of any rights under or interests in the Contract will be binding on the other party without the written consent of the party sought to be bound; and, specifically but without limitation, money that may become due and money that is due may not be assigned without such consent (except to the extent that the effect of this restriction may be limited by law), and unless specifically stated to the contrary in any written consent to an assignment, no assignment will release or discharge the assignor from any duty or responsibility under the Contract.

18.09 *Successors and Assigns*

A. Owner and Contractor each binds itself, its successors, assigns, and legal representatives to the other party hereto, its successors, assigns, and legal representatives in respect to all covenants, agreements, and obligations contained in the Contract Documents.

18.10 *Headings*

A. Article and paragraph headings are inserted for convenience only and do not constitute parts of these General Conditions.

Copyright© 2018 National Society of Professional Engineers, American Council of Engineering Companies, and American Society of Civil Engineers. All rights reserved.

SUPPLEMENTARY CONDITIONS OF THE CONSTRUCTION CONTRACT

TABLE OF CONTENTS

Page

Article 1— Definitions and Terminology 1
Article 2— Preliminary Matters 5
Article 3— Contract Documents: Intent, Requirements, Reuse 9
Article 4— Commencement and Progress of the Work 9
Article 5— Site, Subsurface and Physical Conditions, Hazardous Environmental Conditions 10
Article 6— Bonds and Insurance 10
Article 7— Contractor's Responsibilities 14
Article 8— Other Work at the Site 16
Article 9— Owner's Responsibilities 16
Article 10— Engineer's Status During Construction 17
Article 11— Changes to the Contract 18
Article 12— Claims 19
Article 13— Cost of Work; Allowances, Unit Price Work 19
Article 14— Tests and Inspections; Correction, Removal, or Accceptance of Defective Work 19
Article 15— Payments to Contractor, Set Offs; Completions; Correction Period 19
Article 16— Suspension of Work and Termination 21
Article 17— Final Resolutions of Disputes 21
Article 18— Miscellaneous 23
Article 19— Federal Requirements 23
Article 20— State requirements 28
Exhibit A— Software Requirements for Electronic Document Exchange 1
Exhibit B— Foreseeable Bad Weather Days 1

Copyright© 2018 National Society of Professional Engineers, American Council of Engineering Companies, and American Society of Civil Engineers. All rights reserved.

SUPPLEMENTARY CONDITIONS OF THE CONSTRUCTION CONTRACT

These Supplementary Conditions amend or supplement EJCDC® C-700, Standard General Conditions of the Construction Contract (2018). The General Conditions remain in full force and effect except as amended.

The terms used in these Supplementary Conditions have the meanings stated in the General Conditions. Additional terms used in these Supplementary Conditions have the meanings stated below, which are applicable to both the singular and plural thereof.

The address system used in these Supplementary Conditions is the same as the address system used in the General Conditions, with the prefix "SC" added—for example, "Paragraph SC-4.05."

ARTICLE 1— DEFINITIONS AND TERMINOLOGY

1.01 *Defined Terms*

SC-1.01.A.8 Add the following at the end of the Paragraph:

The Change Order form to be used on this Project is EJCDC C-941 (2018). Agency approval is required before Change Orders are effective.

SC-1.01.A.30 Add the following at the end of the Paragraph:

For the purposes of Rural Development, this term is synonymous with the term "applicant" as defined in 7 CFR 1780.7 (a) (1), (2) and (3) and is an entity receiving financial assistance from the federal programs. Refers to Owner's officials, officers, agents and employees.

SC-1.01.A.50 Add the following at the end of the Paragraph:

The Work Change Directive form to be used on this Project is EJCDC C-940 (2018). Agency approval is required before a Work Change Directive is issued.

SC-1.01.A.51 Add the following new paragraph immediately after Paragraph 1.01.A.50:

51. Agency - The Project is financed in whole or in part by USDA Rural Utilities Service pursuant to the Consolidated Farm and Rural Development Act (7 USC Section 1921 et seq.). The Rural Utilities Service programs are administered through the USDA Rural Development offices; therefore, the Agency for these documents is USDA Rural Development.

SC-1.01.A.52 Add the following new paragraph with the title "American Iron and Steel Definitions" immediately after Paragraph 1.01.A.51:

52. *American Iron and Steel Definitions*

a. *American Iron and Steel (AIS)* - Requirements mandated by Section 746 of Title VII of the Consolidated Appropriations Act of 2017 (Division A - Agriculture, Rural Development, Food and Drug Administration, and Related Agencies Appropriations Act, 2017) and subsequent statutes mandating domestic preference for "iron and steel products," meaning the following products, if made primarily of iron or steel: lined or unlined pipes and fittings, manhole covers and other municipal castings, hydrants, tanks, flanges, pipe clamps and

Copyright© 2018 National Society of Professional Engineers, American Council of Engineering Companies, and American Society of Civil Engineers. All rights reserved.

restraints, valves, structural steel, reinforced precast concrete, and Construction Materials. AIS requirements apply in each of the several states, the District of Columbia, and each federally recognized Tribe, but not the U.S. Territories.

b. *Coating* - A covering that is applied to the surface of an object. If a Coating is applied to the external surface of a domestic iron or Steel component, and the application takes place outside of the United States, said product would be considered a compliant product under the AIS requirements. Any Coating processes that are applied to the external surface of Iron and Steel components that would otherwise be AIS compliant would not disqualify the product from meeting the AIS requirements regardless of where the Coating processes occur, provided that final assembly of the product occurs in the United States. This exemption only applies to Coatings on the external surface of Iron and Steel components. It does not apply to Coatings or linings on internal surfaces of Iron and Steel products, such as the lining of lined pipes. All Manufacturing Processes for lined pipes, including the application of pipe lining, must occur in the United States for the product to be compliant with AIS requirements.

c. *Construction Materials* - Those articles, materials, or supplies made primarily of iron and/or steel, that are permanently incorporated into the project, not including mechanical and/or electrical components, equipment and systems. Some of these products may overlap with what is also considered "structural steel". Note: Mechanical and electrical components, equipment and systems are not considered Construction Materials. See definitions of Mechanical Equipment and Electrical Equipment.

d. *Contractor's Certification* - Documentation submitted by the Contractor upon Substantial Completion of the Contract that all Iron and Steel products installed were Produced in the United States.

e. *De Minimis* - Various miscellaneous, incidental low-cost components that are essential for, but incidental to, the construction and are incorporated into the physical structure of the project. Examples of De Minimis components could include small washers, screws, fasteners (such as "off the shelf" nuts and bolts), miscellaneous wire, corner bead, ancillary tube, signage, trash bins, door hardware etc. Costs for such De Minimis components cumulatively may comprise no more than a total of five percent of the total cost of the materials used in and incorporated into a project; the cost of an individual item may not exceed one percent of the total cost of the materials used in and incorporated into a project.

f. *Electrical Equipment* - Typically any machine powered by electricity and includes components that are part of the electrical distribution system. AIS does not apply to Electrical Equipment.

g. *Engineer's Certification* - Documentation submitted by the Engineer that Drawings, Specifications, and Bidding Documents comply with AIS.

h. *Iron and Steel products* - The following products made primarily of iron or steel: lined or unlined pipes and fittings, manhole covers and other municipal castings, hydrants, tanks, flanges, pipe clamps and restraints, valves, structural steel, reinforced precast concrete, and Construction Materials. Only items on the above

Copyright© 2018 National Society of Professional Engineers, American Council of Engineering Companies, and American Society of Civil Engineers. All rights reserved.

list made primarily of iron or steel, permanently incorporated into the project must be Produced in the United States. For example, trench boxes, scaffolding or equipment, which are removed from the project site upon completion of the project, are not required to be made of U.S. iron or steel.

i. ***Manufacturer*** **- A Supplier, fabricator, distributor, materialman, or vendor is an entity with which the Owner, Contractor or any subcontractor has contracted to furnish materials or equipment to be incorporated in the project by the Owner, Contractor or a subcontractor.**

j. ***Manufacturer's Certification*** **- Documentation provided by the Manufacturer stating that the Iron and Steel products to be used in the project are produced in the United States in accordance with American Iron and Steel (AIS) Requirements. If items are purchased via a Supplier, distributor, vendor, etc. from the Manufacturer directly, then the Supplier, distributor, vendor, etc. will be responsible for obtaining and providing these certifications to the parties purchasing the products.**

k. ***Manufacturing Processes*** **- Processes such as melting, refining, pouring, forming, rolling, drawing, finishing, and fabricating. Further, if a domestic Iron and Steel product is taken out of the United States for any part of the manufacturing process, it becomes foreign source material. However, raw materials such as iron ore, limestone and iron and steel scrap are not covered by the AIS requirement, and the material(s), if any, being applied as a Coating are similarly not covered. Non-iron or Steel components of an Iron and Steel product may come from non-US sources. For example, for products such as valves and hydrants, the individual non-Iron and Steel components do not have to be of domestic origin. Raw materials, such as iron ore, limestone, scrap iron, and scrap steel, can come from non-U.S. sources.**

l. ***Mechanical Equipment*** **- Typically equipment which has motorized parts and/or is powered by a motor. AIS does not apply to Mechanical Equipment.**

m. ***Minor Components*** **- Components within an iron and/or Steel product otherwise compliant with the American Iron and Steel requirements; this waiver is typically used by Manufacturers. It differs from the De Minimis definition in that De Minimis pertains to the entire project and the minor component definition pertains to a single product. This waiver allows use of non-domestically produced miscellaneous Minor Components comprising up to five percent of the total material cost of an otherwise domestically produced Iron and Steel product. However, unless a separate waiver for a product has been approved, all other Iron and Steel components in said product must still meet the AIS requirements. This waiver does not exempt the whole product from the AIS requirements only Minor Components within said product and the iron or Steel components of the product must be produced domestically. Valves and hydrants are also subject to the cost ceiling requirements described here. Examples of Minor Components could include items such as pins and springs in valves/hydrants, bands/straps in couplings, and other low-cost items such as small fasteners etc.**

n. ***Municipal Castings*** **- Cast iron or Steel infrastructure products that are melted and cast. They typically provide access, protection, or housing for components**

Copyright© 2018 National Society of Professional Engineers, American Council of Engineering Companies, and American Society of Civil Engineers. All rights reserved.

incorporated into utility owned drinking water, storm water, wastewater, and solid waste infrastructure.

o. ***Primarily Iron or Steel*** **- A product is made of greater than 50 percent iron or Steel on a materials cost basis. An exception to this definition is reinforced precast concrete (see Definitions). All technical specifications and applicable industry standards (e.g. NIST, NSF, AWWA) must be met. If a product is determined to be less than 50 percent iron and/or steel, the AIS requirements do not apply. For example, the cost of a fire hydrant includes:**

- **The cost of materials used for the iron portion of a fire hydrant (e.g. bonnet, body and shoe); and**
- **The cost to pour and cast to create those components (e.g. labor and energy).**

Not included in the cost are:

- **The additional material costs for the non-iron or Steel internal workings of the hydrant (e.g. stem, coupling, valve, seals, etc.); and**
- **The cost to assemble the internal workings into the hydrant body.**

p. ***Produced in the United States*** **- The production in the United States of the iron or Steel products used in the project requires that all Manufacturing Processes must take place in the United States, with the exception of metallurgical processes involving refinement of steel additives.**

q. ***Reinforced Precast Concrete*** **– Reinforced Precast Concrete structures must comply with AIS, regardless of whether it consists of at least 50 percent iron or steel. The reinforcing bar and wire must be Produced in the United States and meet the same standards as for any other iron or Steel product. Additionally, the casting of the concrete product must take place in the United States. The cement and other raw materials used in concrete production are not required to be of domestic origin. If the reinforced concrete is cast at the construction site, the reinforcing bar and wire are considered Construction Materials and must be Produced in the United States.**

r. ***Steel*** **- An alloy that includes at least 50 percent iron, between 0.02 and 2 percent carbon, and may include other elements. Metallic elements such as chromium, nickel, molybdenum, manganese, and silicon may be added during the melting of Steel for the purpose of enhancing properties such as corrosion resistance, hardness, or strength. The definition of Steel covers carbon steel, alloy steel, stainless steel, tool steel, and other specialty steels.**

s. ***Structural Steel*** **- Rolled flanged shapes, having at least one dimension of their cross-section three inches or greater, which are used in the construction of bridges, buildings, ships, railroad rolling stock, and for numerous other constructional purposes. Such shapes are designated as wide-flange shapes, standard I-beams, channels, angles, tees, and zees. Other shapes include but are not limited to, H-piles, sheet piling, tie plates, cross ties, and those for other special purposes.**

Copyright© 2018 National Society of Professional Engineers, American Council of Engineering Companies, and American Society of Civil Engineers. All rights reserved.

ARTICLE 2— PRELIMINARY MATTERS

2.02 *Copies of Documents*

SC-2.02 Amend the first sentence of Paragraph 2.02.A. to read as follows:

Owner shall furnish to Contractor **five (5)** printed copies of the Contract Documents (including one fully signed counterpart of the Agreement), and **one (1) copy** in electronic portable document format (PDF).

2.06 *Electronic Transmittals*

SC-2.06 Delete Paragraphs 2.06.B and 2.06.C in their entirety and insert the following in their place:

B. *Electronic Documents Protocol:* The parties shall conform to the following provisions in Paragraphs 2.06.B and 2.06.C, together referred to as the Electronic Documents Protocol ("EDP" or "Protocol") for exchange of electronic transmittals.

1. *Basic Requirements*

a. To the fullest extent practical, the parties agree to and will transmit and accept Electronic Documents in an electronic or digital format using the procedures described in this Protocol. Use of the Electronic Documents and any information contained therein is subject to the requirements of this Protocol and other provisions of the Contract.

b. The contents of the information in any Electronic Document will be the responsibility of the transmitting party.

c. Electronic Documents as exchanged by this Protocol may be used in the same manner as the printed versions of the same documents that are exchanged using non-electronic format and methods, subject to the same governing requirements, limitations, and restrictions, set forth in the Contract Documents.

d. Except as otherwise explicitly stated herein, the terms of this Protocol will be incorporated into any other agreement or subcontract between a party and any third party for any portion of the Work on the Project, or any Project-related services, where that third party is, either directly or indirectly, required to exchange Electronic Documents with a party or with Engineer. Nothing herein will modify the requirements of the Contract regarding communications between and among the parties and their subcontractors and consultants.

e. When transmitting Electronic Documents, the transmitting party makes no representations as to long term compatibility, usability, or readability of the items resulting from the receiving party's use of software application packages, operating systems, or computer hardware differing from those established in this Protocol.

f. Nothing herein negates any obligation 1) in the Contract to create, provide, or maintain an original printed record version of Drawings and Specifications, signed and sealed according to applicable Laws and Regulations; 2) to comply with any applicable Law or Regulation governing the signing and sealing of design documents or the signing and electronic transmission of any other documents; or 3) to comply with the notice requirements of Paragraph 18.01 of the General Conditions.

Copyright© 2018 National Society of Professional Engineers, American Council of Engineering Companies, and American Society of Civil Engineers. All rights reserved.

2. *System Infrastructure for Electronic Document Exchange*

   a. Each party will provide hardware, operating system(s) software, internet, e-mail, and large file transfer functions ("System Infrastructure") at its own cost and sufficient for complying with the EDP requirements. With the exception of minimum standards set forth in this EDP, and any explicit system requirements specified by attachment to this EDP, it is the obligation of each party to determine, for itself, its own System Infrastructure.

      1) The maximum size of an email attachment for exchange of Electronic Documents under this EDP is **10** MB. Attachments larger than that may be exchanged using large file transfer functions or physical media.

      2) Each Party assumes full and complete responsibility for any and all of its own costs, delays, deficiencies, and errors associated with converting, translating, updating, verifying, licensing, or otherwise enabling its System Infrastructure, including operating systems and software, for use with respect to this EDP.

   b. Each party is responsible for its own system operations, security, back-up, archiving, audits, printing resources, and other Information Technology ("IT") for maintaining operations of its System Infrastructure during the Project, including coordination with the party's individual(s) or entity responsible for managing its System Infrastructure and capable of addressing routine communications and other IT issues affecting the exchange of Electronic Documents.

   c. Each party will operate and maintain industry-standard, industry-accepted, ISO-standard, commercial-grade security software and systems that are intended to protect the other party from: software viruses and other malicious software like worms, trojans, adware; data breaches; loss of confidentiality; and other threats in the transmission to or storage of information from the other parties, including transmission of Electronic Documents by physical media such as CD/DVD/flash drive/hard drive. To the extent that a party maintains and operates such security software and systems, it shall not be liable to the other party for any breach of system security.

   d. In the case of disputes, conflicts, or modifications to the EDP required to address issues affecting System Infrastructure, the parties shall cooperatively resolve the issues; but, failing resolution, the Owner is authorized to make and require reasonable and necessary changes to the EDP to effectuate its original intent. If the changes cause additional cost or time to Contractor, not reasonably anticipated under the original EDP, Contractor may seek an adjustment in price or time under the appropriate process in the Contract.

   e. Each party is responsible for its own back-up and archive of documents sent and received during the term of the contract under this EDP, unless this EDP establishes a Project document archive, either as part of a mandatory Project website or other communications protocol, upon which the parties may rely for document archiving during the specified term of operation of such Project document archive. Further, each party remains solely responsible for its own post-Project back-up and archive of Project documents after the term of the Contract, or after termination of the

Copyright© 2018 National Society of Professional Engineers, American Council of Engineering Companies, and American Society of Civil Engineers. All rights reserved.

Project document archive, if one is established, for as long as required by the Contract and as each party deems necessary for its own purposes.

f. If a receiving party receives an obviously corrupted, damaged, or unreadable Electronic Document, the receiving party will advise the sending party of the incomplete transmission.

g. The parties will bring any non-conforming Electronic Documents into compliance with the EDP. The parties will attempt to complete a successful transmission of the Electronic Document or use an alternative delivery method to complete the communication.

h. The Owner will operate a Project information management system (also referred to in this EDP as "Project Website") for use of Owner, Engineer and Contractor during the Project for exchange and storage of Project-related communications and information. Except as otherwise provided in this EDP or the General Conditions, use of the Project Website by the parties as described in this Paragraph will be mandatory for exchange of Project documents, communications, submittals, and other Project-related information. The following conditions and standards will govern use of the Project Website:

1) Describe the period of time during which the Project Website will be operated and be available for reliance by the parties;

2) Provide any minimum system infrastructure, software licensing and security standards for access to and use of the Project Website;

3) Describe the types and extent of services to be provided at the Project Website (such as large file transfer, email, communication and document archives, etc.); and

4) Include any other Project Website attributes that may be pertinent to Contractor's use of the facility and pricing of such use.

C. *Software Requirements for Electronic Document Exchange; Limitations*

1. Each party will acquire the software and software licenses necessary to create and transmit Electronic Documents and to read and to use any Electronic Documents received from the other party (and if relevant from third parties), using the software formats required in this section of the EDP.

a. Prior to using any updated version of the software required in this section for sending Electronic Documents to the other party, the originating party will first notify and receive concurrence from the other party for use of the updated version or adjust its transmission to comply with this EDP.

2. The parties agree not to intentionally edit, reverse engineer, decrypt, remove security or encryption features, or convert to another format for modification purposes any Electronic Document or information contained therein that was transmitted in a software data format, including Portable Document Format (PDF), intended by sender not to be modified, unless the receiving party obtains the permission of the sending party or is citing or quoting excerpts of the Electronic Document for Project purposes.

Copyright© 2018 National Society of Professional Engineers, American Council of Engineering Companies, and American Society of Civil Engineers. All rights reserved.

3. Software and data formats for exchange of Electronic Documents will conform to the requirements set forth in Exhibit A to this EDP, including software versions, if listed.

SC-2.06 Supplement Paragraph 2.06 of the General Conditions by adding the following paragraph:

D. *Requests by Contractor for Electronic Documents in Other Formats*

1. Release of any Electronic Document versions of the Project documents in formats other than those identified in the Electronic Documents Protocol (if any) or elsewhere in the Contract will be at the sole discretion of the Owner.

2. To extent determined by Owner, in its sole discretion, to be prudent and necessary, release of Electronic Documents versions of Project documents and other Project information requested by Contractor ("Request") in formats other than those identified in the Electronic Documents Protocol (if any) or elsewhere in the Contract will be subject to the provisions of the Owner's response to the Request, and to the following conditions to which Contractor agrees:

a. The content included in the Electronic Documents created by Engineer and covered by the Request was prepared by Engineer as an internal working document for Engineer's purposes solely, and is being provided to Contractor on an "AS IS" basis without any warranties of any kind, including, but not limited to any implied warranties of fitness for any purpose. As such, Contractor is advised and acknowledges that the content may not be suitable for Contractor's application, or may require substantial modification and independent verification by Contractor. The content may include limited resolution of models, not-to-scale schematic representations and symbols, use of notes to convey design concepts in lieu of accurate graphics, approximations, graphical simplifications, undocumented intermediate revisions, and other devices that may affect subsequent reuse.

b. Electronic Documents containing text, graphics, metadata, or other types of data that are provided by Engineer to Contractor under the request are only for convenience of Contractor. Any conclusion or information obtained or derived from such data will be at the Contractor's sole risk and the Contractor waives any claims against Engineer or Owner arising from use of data in Electronic Documents covered by the Request.

c. Contractor shall indemnify and hold harmless Owner and Engineer and their subconsultants from all claims, damages, losses, and expenses, including attorneys' fees and defense costs arising out of or resulting from Contractor's use, adaptation, or distribution of any Electronic Documents provided under the Request.

d. Contractor agrees not to sell, copy, transfer, forward, give away or otherwise distribute this information (in source or modified file format) to any third party without the direct written authorization of Engineer, unless such distribution is specifically identified in the Request and is limited to Contractor's subcontractors. Contractor warrants that subsequent use by Contractor's subcontractors complies with all terms of the Contract Documents and Owner's response to Request.

3. In the event that Owner elects to provide or directs the Engineer to provide to Contractor any Contractor-requested Electronic Document versions of Project information that is not explicitly identified in the Contract Documents as being available to Contractor, the Owner shall be reimbursed by Contractor on an hourly basis (at $**120**

Copyright© 2018 National Society of Professional Engineers, American Council of Engineering Companies, and American Society of Civil Engineers. All rights reserved.

per hour) for any engineering costs necessary to create or otherwise prepare the data in a manner deemed appropriate by Engineer.

ARTICLE 3— CONTRACT DOCUMENTS: INTENT, REQUIREMENTS, REUSE

No suggested Supplementary Conditions in this Article.

ARTICLE 4— COMMENCEMENT AND PROGRESS OF THE WORK

4.01 *Commencement of Contract Times; Notice to Proceed*

SC-4.01.A Delete the last sentence of paragraph.

4.05 *Delays in Contractor's Progress*

SC-4.05 Amend Paragraph 4.05.C by adding the following subparagraphs:

5. *Weather-Related Delays*

a. If "abnormal weather conditions" as set forth in Paragraph 4.05.C.2 of the General Conditions are the basis for a request for an equitable adjustment in the Contract Times, such request must be documented by data substantiating each of the following: 1) that weather conditions were abnormal for the period of time in which the delay occurred, 2) that such weather conditions could not have been reasonably anticipated, and 3) that such weather conditions had an adverse effect on the Work as scheduled. **Extreme or unusual weather that is typical for a given region, elevation, or season should not be considered abnormal weather conditions. Requests for time extensions due to abnormal weather conditions will be submitted to the Engineer within five days of the end of the abnormal weather condition event. It is the responsibility of the Contractor to provide the information listed in SC 4.05.C.5.b.**

b. The existence of abnormal weather conditions will be determined on a month-by-month basis in accordance with the following:

1) Every workday on which one or more of the following conditions exist will be considered a "bad weather day":

i) Total precipitation (as rain equivalent) occurring between 7:00 p.m. on the preceding day (regardless of whether such preceding day is a workday) through 7:00 p.m. on the workday in question equals or exceeds **1"** of precipitation (as rain equivalent, based on the snow/rain conversion indicated in the table entitled Foreseeable Bad Weather Days; such table is hereby incorporated in this SC-4.05.C by reference.

ii) Ambient outdoor air temperature at 11:00 a.m. is equal to or less than the following low temperature threshold: **35** degrees Fahrenheit; or, at 3:00 p.m. the ambient outdoor temperature is equal to or greater than the following high temperature threshold: **115** degrees Fahrenheit.

2) Determination of actual bad weather days during performance of the Work will be based on the weather records measured and recorded **at or near Yavapai County.**

Copyright© 2018 National Society of Professional Engineers, American Council of Engineering Companies, and American Society of Civil Engineers. All rights reserved.

3) Contractor shall anticipate the number of foreseeable bad weather days per month indicated in the table in Exhibit **B**—Foreseeable Bad Weather Days.

4) In each month, every bad weather day exceeding the number of foreseeable bad weather days established in the table in Exhibit **B**—Foreseeable Bad Weather Days will be considered as "abnormal weather conditions." The existence of abnormal weather conditions will not relieve Contractor of the obligation to demonstrate and document that delays caused by abnormal weather are specific to the planned work activities or that such activities thus delayed were on Contractor's then-current Progress Schedule's critical path for the Project.

ARTICLE 5— SITE, SUBSURFACE AND PHYSICAL CONDITIONS, HAZARDOUS ENVIRONMENTAL CONDITIONS

5.03 *Subsurface and Physical Conditions*

SC-5.03 Add the following new paragraphs immediately after Paragraph 5.03.D:

E. The following table lists the reports of explorations and tests of subsurface conditions at or adjacent to the Site that contain Technical Data, and specifically identifies the Technical Data in the report upon which Contractor may rely:

Report Title	Date of Report	Technical Data
Geotechnical Evaluation Report Jerome WWTP Upgrades	October 25, 2022	Geotechnical

F. The following table lists the drawings of existing physical conditions at or adjacent to the Site, including those drawings depicting existing surface or subsurface structures at or adjacent to the Site (except Underground Facilities), that contain Technical Data, and specifically identifies the Technical Data upon which Contractor may rely:

Drawings Title	Date of Drawings	Technical Data
None.		

G. Contractor may **request to** ~~examine~~ **receive** copies of reports and drawings identified in SC-5.03.E and SC-5.03.F that were not included with the Bidding Documents ~~at **[location]** during regular business hours, or may request copies~~ from Engineer.

ARTICLE 6— BONDS AND INSURANCE

6.01 *Performance, Payment, and Other Bonds*

SC-6.01 Add the following paragraphs immediately after Paragraph 6.01.A:

1. *Required Performance Bond Form:* The performance bond that Contractor furnishes will be in the form of EJCDC® C-610, Performance Bond (~~2010, 2013, or~~ 2018 edition).

2. *Required Payment Bond Form:* The payment bond that Contractor furnishes will be in the form of EJCDC® C-615, Payment Bond (~~2010, 2013, or~~ 2018 edition).

3. All performance and payment bonds shall comply with A.R.S. Section 34-222.

Copyright© 2018 National Society of Professional Engineers, American Council of Engineering Companies, and American Society of Civil Engineers. All rights reserved.

6.02 *Insurance—General Provisions*

SC-6.02 Add the following paragraph immediately after Paragraph 6.02.B:

1. Contractor may obtain worker's compensation insurance from an insurance company that has not been rated by A.M. Best, provided that such company (a) is domiciled in the state in which the Project is located, (b) is certified or authorized as a worker's compensation insurance provider by the appropriate state agency, and (c) has been accepted to provide worker's compensation insurance for similar projects by the state within the last 12 months.

SC-6.02 Add the following paragraph immediately after Paragraph 6.02.H.2 of the General Conditions:

2. For **any** ~~the following~~ Subcontractors~~,~~ **or** Suppliers~~, or categories of Subcontractor or Supplier,~~ Contractor shall require the following specified insurance, with policy limits as stated:

Commercial General Liability	**Policy limits of not less than:**
General Aggregate	**$2,000,000**
Products—Completed Operations Aggregate	**$2,000,000**
Products—Completed Operations—Each Occurrence	**$1,000,000**
Personal and Advertising Injury	**$1,000,000**
Bodily Injury and Property Damage—Each Occurrence	**$1,000,000**
Automobile Liability	**Policy limits of not less than:**
Combined Single Limit	
Combined Single Limit (Bodily Injury and Property Damage)	**$1,000,000**
Contractor's Professional Liability	**Policy limits of not less than:**
Each Claim	**$1,000,000**
Annual Aggregate	**$1,000,000**

6.03 *Contractor's Insurance*

SC-6.03 Supplement Paragraph 6.03 with the following provisions after Paragraph 6.03.C:

D. *Other Additional Insureds:* As a supplement to the provisions of Paragraph 6.03.C of the General Conditions, the commercial general liability, automobile liability, umbrella or excess, pollution liability, and unmanned aerial vehicle liability policies must include as additional insureds (in addition to Owner and Engineer) the following: **Town of Jerome, Pacific Advanced Civil Engineering, Inc.**

E. *Workers' Compensation and Employer's Liability:* Contractor shall purchase and maintain workers' compensation and employer's liability insurance, including, as applicable, United States Longshoreman and Harbor Workers' Compensation Act, Jones Act, stop-gap employer's liability coverage for monopolistic states, and foreign voluntary workers' compensation (from available sources, notwithstanding the jurisdictional requirement of Paragraph 6.02.B of the General Conditions).

Copyright© 2018 National Society of Professional Engineers, American Council of Engineering Companies, and American Society of Civil Engineers. All rights reserved.

Workers' Compensation and Related Policies	Policy limits of not less than:
Workers' Compensation	
State	**Statutory**
Applicable Federal (e.g., Longshoreman's)	**Statutory**
Foreign voluntary workers' compensation (employer's responsibility coverage), if applicable	**Statutory**

F. *Commercial General Liability—Claims Covered:* Contractor shall purchase and maintain commercial general liability insurance, covering all operations by or on behalf of Contractor, on an occurrence basis, against claims for:

1. damages because of bodily injury, sickness or disease, or death of any person other than Contractor's employees,
2. damages insured by reasonably available personal injury liability coverage, and
3. damages because of injury to or destruction of tangible property wherever located, including loss of use resulting therefrom.

G. *Commercial General Liability—Form and Content:* Contractor's commercial liability policy must be written on a 1996 (or later) Insurance Services Organization, Inc. (ISO) commercial general liability form (occurrence form) and include the following coverages and endorsements:

1. Products and completed operations coverage.
    a. Such insurance must be maintained for three years after final payment.
    b. Contractor shall furnish Owner and each other additional insured (as identified in the Supplementary Conditions or elsewhere in the Contract) evidence of continuation of such insurance at final payment and three years thereafter.
2. Blanket contractual liability coverage, including but not limited to coverage of Contractor's contractual indemnity obligations in Paragraph 7.18.
3. Severability of interests and no insured-versus-insured or cross-liability exclusions.
4. Underground, explosion, and collapse coverage.
5. Personal injury coverage.
6. Additional insured endorsements that include both ongoing operations and products and completed operations coverage through ISO Endorsements CG 20 10 10 01 and CG 20 37 10 01 (together). If Contractor demonstrates to Owner that the specified ISO endorsements are not commercially available, then Contractor may satisfy this requirement by providing equivalent endorsements.
7. For design professional additional insureds, ISO Endorsement CG 20 32 07 04 "Additional Insured—Engineers, Architects or Surveyors Not Engaged by the Named Insured" or its equivalent.

H. *Commercial General Liability—Excluded Content:* The commercial general liability insurance policy, including its coverages, endorsements, and incorporated provisions, must not include any of the following:

Copyright© 2018 National Society of Professional Engineers, American Council of Engineering Companies, and American Society of Civil Engineers. All rights reserved.

1. Any modification of the standard definition of "insured contract" (except to delete the railroad protective liability exclusion if Contractor is required to indemnify a railroad or others with respect to Work within 50 feet of railroad property).
2. Any exclusion for water intrusion or water damage.
3. Any provisions resulting in the erosion of insurance limits by defense costs other than those already incorporated in ISO form CG 00 01.
4. Any exclusion of coverage relating to earth subsidence or movement.
5. Any exclusion for the insured's vicarious liability, strict liability, or statutory liability (other than worker's compensation).
6. Any limitation or exclusion based on the nature of Contractor's work.
7. Any professional liability exclusion broader in effect than the most recent edition of ISO form CG 22 79.

I. *Commercial General Liability—Minimum Policy Limits*

Commercial General Liability	**Policy limits of not less than:**
General Aggregate	**$2,000,000**
Products—Completed Operations Aggregate	**$2,000,000**
Products—Completed Operations—Each Occurrence	**$1,000,000**
Personal and Advertising Injury	**$1,000,000**
Bodily Injury and Property Damage—Each Occurrence	**$1,000,000**

J. *Automobile Liability:* Contractor shall purchase and maintain automobile liability insurance for damages because of bodily injury or death of any person or property damage arising out of the ownership, maintenance, or use of any motor vehicle. The automobile liability policy must be written on an occurrence basis.

Automobile Liability	**Policy limits of not less than:**
Combined Single Limit	
Combined Single Limit (Bodily Injury and Property Damage)	**$1,000,000**

K. *Umbrella or Excess Liability:* Contractor shall purchase and maintain umbrella or excess liability insurance written over the underlying employer's liability, commercial general liability, and automobile liability insurance described in the Paragraphs above. The coverage afforded must be at least as broad as that of each and every one of the underlying policies.

Excess or Umbrella Liability	**Policy limits of not less than:**
Each Occurrence	**$4,000,000**
General Aggregate	**$4,000,000**
Products—Completed Operations Aggregate	**$4,000,000**

L. *Using Umbrella or Excess Liability Insurance to Meet CGL and Other Policy Limit Requirements:* Contractor may meet the policy limits specified for employer's liability,

Copyright© 2018 National Society of Professional Engineers, American Council of Engineering Companies, and American Society of Civil Engineers. All rights reserved.

commercial general liability, and automobile liability through the primary policies alone, or through combinations of the primary insurance policy's policy limits and partial attribution of the policy limits of an umbrella or excess liability policy that is at least as broad in coverage as that of the underlying policy, as specified herein. If such umbrella or excess liability policy was required under this Contract, at a specified minimum policy limit, such umbrella or excess policy must retain a minimum limit of $**4,000,000** after accounting for partial attribution of its limits to underlying policies, as allowed above.

M. *Contractor's Pollution Liability Insurance:* Contractor shall purchase and maintain a policy covering third-party injury and property damage, including cleanup costs, as a result of pollution conditions arising from Contractor's operations and completed operations. This insurance must be maintained for no less than three years after final completion.

Contractor's Pollution Liability	**Policy limits of not less than:**
Each Occurrence/Claim	**$1,000,000**
General Aggregate	**$1,000,000**

N. *Contractor's Professional Liability Insurance:* If Contractor will provide or furnish professional services under this *Contract*, through a delegation of professional design services or otherwise, then Contractor shall be responsible for purchasing and maintaining applicable professional liability insurance. This insurance must cover negligent acts, errors, or omissions in the performance of professional design or related services by the insured or others for whom the insured is legally liable. The insurance must be maintained throughout the duration of the Contract and for a minimum of two years after Substantial Completion. The retroactive date on the policy must pre-date the commencement of furnishing services on the Project.

Contractor's Professional Liability	**Policy limits of not less than:**
Each Claim	**$1,000,000**
Annual Aggregate	**$1,000,000**

O. ***Deleted***

P. ***Deleted***

Q. ***Deleted***

6.04 ***Deleted***

ARTICLE 7— CONTRACTOR'S RESPONSIBILITIES

7.03 *Labor; Working Hours*

SC-7.03 Add the following new subparagraphs immediately after Paragraph 7.03.C:

1. Regular working hours will be **7:00 AM to 5:00 PM. Hours and days could be extended upon prior Owner approval.**

Copyright© 2018 National Society of Professional Engineers, American Council of Engineering Companies, and American Society of Civil Engineers. All rights reserved.

2. Owner's legal holidays are:

New Year's Day
Thanksgiving Day
Day after Thanksgiving
Day before Christmas
Christmas Day
New Year's Eve

No work is allowed on the Owner Observed Holidays without prior approval.

7.04 *Services, Materials, and Equipment*

SC-7.04.D Add the following new paragraph immediately after Paragraph 7.04.C:

D. All Iron and Steel products must meet American Iron and Steel requirements.

SC-7.04.E Add the following new paragraph immediately after Paragraph 7.04.D:

D. For projects utilizing a De Minimis waiver, Contractor shall maintain an itemized list of non-domestically produced iron or steel incidental components and ensure that the cost is less than 5% of total materials cost for project.

7.05 *"Or Equals"*

SC-7.05.A Amend the third sentence of paragraph by striking out the following words:

Unless the specification or description contains or is followed by words reading that no like, equivalent, or "or-equal" item is permitted,

SC-7.05.A.1.a.3 Amend the last sentence of Paragraph a.3 by striking out "and;" and adding a period at the end of Paragraph a.3.

SC-7.05.A.1.a.4 Delete paragraph in its entirety and insert "Deleted."

SC-7.05.B Add the following at the end of paragraph:

Contractor shall include a Manufacturer's Certification letter for compliance with American Iron and Steel requirements in support data, if applicable. Refer to Manufacturer's Certification Letter provided in these Contract Documents.

7.06 *Substitutes*

SC-7.06.A.3.a.2 Remove "and" from the end of paragraph.

SC-7.06.A.3.a.3 Add "; and" to the end of paragraph.

SC-7.06.A.3.a.4 Add the following new paragraph immediately after Paragraph 7.06.A.3.a.3:

4) Comply with American Iron and Steel by providing Manufacturer's Certification letter of American Iron and Steel compliance, if applicable. Refer to Manufacturer's Certification Letter provided in these Contract Documents.

7.07 *Concerning Subcontractors and Suppliers*

SC-7.07.A Amend by adding the following to the end of the paragraph:

The total amount of work subcontracted by the Contractor shall not exceed fifty percent of the Contract price without prior approval from the Owner, Engineer and Agency.

Copyright© 2018 National Society of Professional Engineers, American Council of Engineering Companies, and American Society of Civil Engineers. All rights reserved.

SC-7.07.B – Delete paragraph in its entirety and insert ”Deleted”.

SC-7.07.E Delete the second sentence of paragraph and insert the following in its place:

Owner may not require that Contractor use a specific replacement.

7.12 *Record Documents*

SC-7.12.A Delete the second sentence of paragraph and insert the following in its place:

Owner may not require that Contractor use a specific replacement.

SC-7.12.A Amend paragraph by adding the following after ”written interpretations and clarifications,”

Manufacturers’ Certifications,

7.16 *Submittals*

SC-7.16.A.1.c Amend paragraph by deleting the last period and adding:

, including Manufacturer’s Certification letter for any item in the submittal subject to American Iron and Steel requirements and include the Certificate in the submittal. Refer to Manufacturer’s Certification Letter provided in these Contract Documents.

SC-7.16.C.9 Add new paragraph immediately after Paragraph 7.16.C.8:

1. Engineer’s review and approval of a Shop Drawing or Sample shall include review of Manufacturers’ Certifications in order to document compliance with American Iron and Steel requirements, as applicable.

7.17 *Contractor’s General Warranty and Guarantee*

SC-7.17.F Add new paragraph immediately after Paragraph 7.17.E:

F. Contractor shall certify upon Substantial Completion that all Work and Materials have complied with American Iron and Steel requirements as mandated by Section 746 of Title VII of the Consolidated Appropriations Act of 2017 (Division A - Agriculture, Rural Development, Food and Drug Administration, and Related Agencies Appropriations Act, 2017) and subsequent statutes mandating domestic preference. Contractor shall provide said Certification to Owner. Refer to General Contractor’s Certification Letter provided in these Contract Documents.

ARTICLE 8— OTHER WORK AT THE SITE

8.02 *Coordination*

SC-8.02 Add the following new Paragraph 8.02.C immediately after Paragraph 8.02.B:

C. The Jerome Wastewater Treatment Plant will remain operational during construction of the upgrades and the Contractor shall coordinate closely with the Resident Project Representative to ensure operational activities are not inhibited.

ARTICLE 9— OWNER’S RESPONSIBILITIES

No suggested Supplementary Conditions in this Article.

Copyright© 2018 National Society of Professional Engineers, American Council of Engineering Companies, and American Society of Civil Engineers. All rights reserved.

ARTICLE 10— ENGINEER'S STATUS DURING CONSTRUCTION

10.03 *Resident Project Representative*

SC-10.03 Add the following new paragraphs immediately after Paragraph 10.03.B:

C. The Resident Project Representative (RPR) will be Engineer's representative at the Site. RPR's dealings in matters pertaining to the Work in general will be with Engineer and Contractor. RPR's dealings with Subcontractors will only be through or with the full knowledge or approval of Contractor. The RPR will:

1. *Conferences and Meetings:* Attend meetings with Contractor, such as preconstruction conferences, progress meetings, job conferences, and other Project-related meetings (but not including Contractor's safety meetings), and as appropriate prepare and circulate copies of minutes thereof.

2. *Safety Compliance:* Comply with Site safety programs, as they apply to RPR, and if required to do so by such safety programs, receive safety training specifically related to RPR's own personal safety while at the Site.

3. *Liaison*

   a. Serve as Engineer's liaison with Contractor. Working principally through Contractor's authorized representative or designee, assist in providing information regarding the provisions and intent of the Contract Documents.

   b. Assist Engineer in serving as Owner's liaison with Contractor when Contractor's operations affect Owner's on-Site operations.

   c. Assist in obtaining from Owner additional details or information, when required for Contractor's proper execution of the Work.

4. *Review of Work; Defective Work*

   a. Conduct on-Site observations of the Work to assist Engineer in determining, to the extent set forth in Paragraph 10.02, if the Work is in general proceeding in accordance with the Contract Documents.

   b. Observe whether any Work in place appears to be defective.

   c. Observe whether any Work in place should be uncovered for observation, or requires special testing, inspection or approval.

5. *Inspections and Tests*

   a. Observe Contractor-arranged inspections required by Laws and Regulations, including but not limited to those performed by public or other agencies having jurisdiction over the Work.

   b. Accompany visiting inspectors representing public or other agencies having jurisdiction over the Work.

6. *Payment Requests:* Review Applications for Payment with Contractor.

7. *Completion*

   a. Participate in Engineer's visits regarding Substantial Completion.

Copyright© 2018 National Society of Professional Engineers, American Council of Engineering Companies, and American Society of Civil Engineers. All rights reserved.

b. Assist in the preparation of a punch list of items to be completed or corrected.

c. Participate in Engineer's visit to the Site in the company of Owner and Contractor regarding completion of the Work, and prepare a final punch list of items to be completed or corrected by Contractor.

d. Observe whether items on the final punch list have been completed or corrected.

D. The RPR will not:

1. Authorize any deviation from the Contract Documents or substitution of materials or equipment (including "or-equal" items).

2. Exceed limitations of Engineer's authority as set forth in the Contract Documents.

3. Undertake any of the responsibilities of Contractor, Subcontractors, or Suppliers.

4. Advise on, issue directions relative to, or assume control over any aspect of the means, methods, techniques, sequences or procedures of construction.

5 Advise on, issue directions regarding, or assume control over security or safety practices, precautions, and programs in connection with the activities or operations of Owner or Contractor.

6. Participate in specialized field or laboratory tests or inspections conducted off-site by others except as specifically authorized by Engineer.

7. Authorize Owner to occupy the Project in whole or in part.

ARTICLE 11— CHANGES TO THE CONTRACT

11.02 *Change Orders*

SC-11.02.C Add new paragraph immediately after Paragraph 11.02.B:

C. The Engineer or Owner shall contact the Agency for concurrence on each Change Order prior to issuance. All Contract Change Orders must be concurred on (signed) by Agency before they are effective.

11.03 *Work Change Directives*

SC-11.03.A.2 Add new Paragraph 11.03.A.2 immediately after Paragraph 11.03.A, which shall be renamed Paragraph 11.03.A.1:

2. The Engineer or Owner shall contact the Agency for concurrence on each Work Change Directive prior to issuance. Once authorized by Owner, a copy of each Work Change Directive shall be provided by Engineer to the Agency.

11.05 *Owner-Authorized Changes in the Work*

SC-11.05.B Add the following at the end of this paragraph:

For Owner-authorized changes in the Work, the Contractor will provide the Manufacturer's Certification(s) for materials subject to American Iron and Steel requirements except when sole-source is specified, in which case the Engineer will provide the Manufacturer's Certification(s).

11.09 *Change Proposals*

Copyright© 2018 National Society of Professional Engineers, American Council of Engineering Companies, and American Society of Civil Engineers. All rights reserved.

SC-11.09.B.2.C Add new paragraph immediately after Paragraph 11.09.B.2.b:

C. **Change orders involving materials subject to American Iron and Steel requirements shall include supporting data (name of Manufacturer, city and state where the product was manufactured, description of product, signature of authorized Manufacturer's representative) in the Manufacturer's Certification Letter, as applicable**.

ARTICLE 12— CLAIMS

No suggested Supplementary Conditions in this Article.

ARTICLE 13— COST OF WORK; ALLOWANCES, UNIT PRICE WORK

13.01 *Cost of the Work*

SC-13.01 Supplement Paragraph 13.01.B.5.c.(2) by adding the following sentence:

The equipment rental rate book that governs the included costs for the rental of machinery and equipment owned by Contractor (or a related entity) under the Cost of the Work provisions of this Contract is the most current edition of **Rental Rate Blue Book For Construction Equipment.**

SC-13.01 Supplement Paragraph 13.01.C.2 by adding the following definition of small tools and hand tools:

a. For purposes of this paragraph, "small tools and hand tools" means any tool or equipment whose current price if it were purchased new at retail would be less than $500.

13.02 *Allowances*

SC-13.02.C Delete paragraph in its entirety and insert "Deleted".

ARTICLE 14— TESTS AND INSPECTIONS; CORRECTION, REMOVAL, OR ACCCEPTANCE OF DEFECTIVE WORK

14.03 *Defective Work*

SC-14.03.G Add new paragraph immediately after Paragraph 14.03.F:

G. Installation of materials that are non-compliant with American Iron and Steel requirements shall be considered defective work.

ARTICLE 15— PAYMENTS TO CONTRACTOR, SET OFFS; COMPLETIONS; CORRECTION PERIOD

15.01 *Progress Payments*

SC-15.01.B.4 Add the following language at the end of paragraph:

No payments will be made that would deplete the retainage, place in escrow any funds that are required for retainage or invest the retainage for the benefit of the Contractor.

SC-15.01.B.5 Add new paragraph immediately after Paragraph 15.01.B.4:

Copyright© 2018 National Society of Professional Engineers, American Council of Engineering Companies, and American Society of Civil Engineers. All rights reserved.

5. **The Application for Payment form to be used on this Project is EJCDC® C-620. The Agency must approve all Applications for Payment before payment is made.**

SC-15.01.B.6 Add new paragraph immediately after Paragraph 15.01.B.5:

6. **By submitting an Application for Payment based in whole or in part on furnishing equipment or materials, Contractor certifies that such equipment and materials are compliant with American Iron and Steel requirements. Manufacturer's Certification letter for materials satisfy this requirement. Refer to Manufacturer's Certification Letter provided in these Contract Documents.**

SC-15.01.C.2.d Add the following new paragraph immediately after Paragraph 15.01.C.2.c:

a. **The materials presented for payment in an Application for Payment comply with American Iron and Steel requirements.**

SC-15.01.D.1 Delete paragraph in its entirety and insert the following in its place:

1. **The Application for Payment with Engineer's recommendations will be presented to the Owner and Agency for consideration. If both the Owner and Agency find the Application for Payment acceptable, the recommended amount less any reduction under the provisions of Paragraph 15.01.E will become due twenty (20) days after the Application for Payment is presented to the Owner, and the Owner will make payment to the Contractor.**

15.02 *Contractor's Warranty of Title*

SC-15.02.A Amend paragraph by striking out the following text: "7 days after".

15.03 *Substantial Completion*

SC-15.03.A Modify by adding the following after the last sentence:

Contractor shall also submit the General (Prime) Contractor's Certification of Compliance certifying that to the best of the Contractor's knowledge and belief all substitutes, equals, and all Iron and Steel products proposed in the Shop Drawings, Change Orders, and Partial Payment Estimates, and those installed for the Project, are either Produced in the United States or are the subject of an approved waiver under Section 746 of Title VII of the Consolidated Appropriations Act of 2017 (Division A - Agriculture, Rural Development, Food and Drug Administration, and Related Agencies Appropriations Act, 2017) and subsequent statutes mandating domestic preference.

SC-15.03.B Add the following new subparagraph to Paragraph 15.03.B:

1. If some or all of the Work has been determined not to be at a point of Substantial Completion and will require re-inspection or re-testing by Engineer, the cost of such re-inspection or re-testing, including the cost of time, travel and living expenses, will be paid by Contractor to Owner. If Contractor does not pay, or the parties are unable to agree as to the amount owed, then Owner may impose a reasonable set-off against payments due under this Article 15.

Copyright© 2018 National Society of Professional Engineers, American Council of Engineering Companies, and American Society of Civil Engineers. All rights reserved.

15.08 *Correction Period*

SC-15.08 Add the following new Paragraph 15.08.G:

G. The correction period specified as one year after the date of Substantial Completion in Paragraph 15.08.A of the General Conditions is hereby revised to be the number of years set forth in SC-6.01.B.1; or if no such revision has been made in SC-6.01.B, then the correction period is hereby specified to be **two (2)** years after Substantial Completion.

ARTICLE 16— SUSPENSION OF WORK AND TERMINATION

No suggested Supplementary Conditions in this Article.

ARTICLE 17— FINAL RESOLUTIONS OF DISPUTES

17.02 *Arbitration*

SC-17.02 Add the following new paragraph immediately after Paragraph 17.01.

17.02 *Arbitration*

A. All matters subject to final resolution under this Article will be settled by arbitration administered by the American Arbitration Association in accordance with its Construction Industry Arbitration Rules (subject to the conditions and limitations of this Paragraph SC-17.02). Any controversy or claim in the amount of $100,000 or less will be settled in accordance with the American Arbitration Association's supplemental rules for Fixed Time and Cost Construction Arbitration. This agreement to arbitrate will be specifically enforceable under the prevailing law of any court having jurisdiction.

B. The demand for arbitration will be filed in writing with the other party to the Contract and with the selected arbitration administrator, and a copy will be sent to Engineer for information. The demand for arbitration will be made within the specific time required in Article 17, or if no specified time is applicable within a reasonable time after the matter in question has arisen, and in no event will any such demand be made after the date when institution of legal or equitable proceedings based on such matter in question would be barred by the applicable statute of limitations.

C. The arbitrator(s) must be licensed engineers, contractors, attorneys, or construction managers. Hearings will take place pursuant to the standard procedures of the Construction Arbitration Rules that contemplate in-person hearings. The arbitrators will have no authority to award punitive or other damages not measured by the prevailing party's actual damages, except as may be required by statute or the Contract. Any award in an arbitration initiated under this clause will be limited to monetary damages and include no injunction or direction to any party other than the direction to pay a monetary amount.

D. The Arbitrators will have the authority to allocate the costs of the arbitration process among the parties, but will only have the authority to allocate attorneys' fees if a specific Law or Regulation or this Contract permits them to do so.

E. The award of the arbitrators must be accompanied by a reasoned written opinion and a concise breakdown of the award. The written opinion will cite the Contract provisions deemed applicable and relied on in making the award.

Copyright© 2018 National Society of Professional Engineers, American Council of Engineering Companies, and American Society of Civil Engineers. All rights reserved.

F. The parties agree that failure or refusal of a party to pay its required share of the deposits for arbitrator compensation or administrative charges will constitute a waiver by that party to present evidence or cross-examine witness. In such event, the other party shall be required to present evidence and legal argument as the arbitrator(s) may require for the making of an award. Such waiver will not allow for a default judgment against the non-paying party in the absence of evidence presented as provided for above.

G. No arbitration arising out of or relating to the Contract will include by consolidation, joinder, or in any other manner any other individual or entity (including Engineer, and Engineer's consultants and the officers, directors, partners, agents, employees or consultants of any of them) who is not a party to this Contract unless:

1. the inclusion of such other individual or entity will allow complete relief to be afforded among those who are already parties to the arbitration;

2. such other individual or entity is substantially involved in a question of law or fact which is common to those who are already parties to the arbitration, and which will arise in such proceedings;

3. such other individual or entity is subject to arbitration under a contract with either Owner or Contractor, or consents to being joined in the arbitration; and

4. the consolidation or joinder is in compliance with the arbitration administrator's procedural rules.

H. The award will be final. Judgment may be entered upon it in any court having jurisdiction thereof, and it will not be subject to modification or appeal, subject to provisions of the Laws and Regulations relating to vacating or modifying an arbitral award.

I. Except as may be required by Laws or Regulations, neither party nor an arbitrator may disclose the existence, content, or results of any arbitration hereunder without the prior written consent of both parties, with the exception of any disclosure required by Laws and Regulations or the Contract. To the extent any disclosure is allowed pursuant to the exception, the disclosure must be strictly and narrowly limited to maintain confidentiality to the extent possible.

17.03 *Attorneys' Fees*

SC-17.03 Add the following new paragraph immediately after Paragraph 17.02.

17.03 *Attorneys' Fees*

A. For any matter subject to final resolution under this Article, the prevailing party shall be entitled to an award of its attorneys' fees incurred in the final resolution proceedings, in an equitable amount to be determined in the discretion of the court, arbitrator, arbitration panel, or other arbiter of the matter subject to final resolution, taking into account the parties' initial demand or defense positions in comparison with the final result.

Copyright© 2018 National Society of Professional Engineers, American Council of Engineering Companies, and American Society of Civil Engineers. All rights reserved.

ARTICLE 18— MISCELLANEOUS

SC-18.11 Add new paragraph immediately after Paragraph 18.10:

18.11 ***Tribal Sovereignty***

A. No provision of this Agreement will be construed by any of the signatories as abridging or debilitating any sovereign powers of the [insert name of Tribe] Tribe; affecting the trust-beneficiary relationship between the Secretary of the Interior, Tribe, and Indian landowner(s); or interfering with the government-to-government relationship between the United States and the Tribe.

SC-19 – Add the following new Article 19 immediately after Article 18:

ARTICLE 19— FEDERAL REQUIREMENTS

19.01 ***Agency Not a Party***

A. This Contract is expected to be funded in part with funds provided by Agency. Neither Agency, nor any of its departments, entities, or employees, is a party to this Contract.

19.02 ***Contract Approval***

A. Owner and Contractor will furnish Owner's attorney such evidence as required so that Owner's attorney can complete and execute the "Certificate of Owner's Attorney" (Exhibit G of this Bulletin) before Owner submits the executed Contract Documents to Agency for approval.

B. Agency concurrence is required on both the Bid and the Contract before the Contract is effective.

19.03 ***Conflict of Interest***

A. Contractor may not knowingly contract with a Supplier or Manufacturer if the individual or entity who prepared the Drawings and Specifications has a corporate or financial affiliation with the Supplier or Manufacturer. Owner's officers, employees, or agents shall not engage in the award or administration of this Contract if a conflict of interest, real or apparent, would be involved. Such a conflict would arise when: (i) the employee, officer or agent; (ii) any member of their immediate family; (iii) their partner or (iv) an organization that employs, or is about to employ, any of the above, has a financial interest or other interest in or a tangible personal benefit from the Contractor. Owner's officers, employees, or agents shall neither solicit nor accept gratuities, favors or anything of monetary value from Contractor or subcontractors.

19.04 ***Gratuities***

A. If Owner finds after a notice and hearing that Contractor, or any of Contractor's agents or representatives, offered or gave gratuities (in the form of entertainment, gifts, or otherwise) to any official, employee, or agent of Owner or Agency in an attempt to secure this Contract or favorable treatment in awarding, amending, or making any determinations related to the performance of this Contract, Owner may, by written notice to Contractor, terminate this Contract. Owner may also pursue other rights and remedies that the law or this Contract provides. However, the existence of the facts on which Owner bases such

Copyright© 2018 National Society of Professional Engineers, American Council of Engineering Companies, and American Society of Civil Engineers. All rights reserved.

findings shall be an issue and may be reviewed in proceedings under the dispute resolution provisions of this Contract.

B. In the event this Contract is terminated as provided in paragraph 19.04.A, Owner may pursue the same remedies against Contractor as it could pursue in the event of a breach of this Contract by Contractor. As a penalty, in addition to any other damages to which it may be entitled by law, Owner may pursue exemplary damages in an amount (as determined by Owner) which shall not be less than three nor more than ten times the costs Contractor incurs in providing any such gratuities to any such officer or employee.

19.05 ***Small, Minority and Women's Businesses***

A. If Contractor intends to let any subcontracts for a portion of the work, Contractor will take all necessary affirmative steps to assure that minority businesses, women's business enterprises, and labor surplus area firms are used when possible. Affirmative steps will include:

1. Placing qualified small and minority businesses and women's business enterprises on solicitation lists;

2. Assuring that small and minority businesses, and women's business enterprises are solicited whenever they are potential sources;

3. Dividing total requirements, when economically feasible, into smaller tasks or quantities to permit maximum participation by small and minority businesses, and women's business enterprises;

4. Establishing delivery schedules, where the requirement permits, which encourage participation by small and minority businesses, and women's business enterprises;

5. Using the services and assistance, as appropriate, of such organizations as the Small Business Administration and the Minority Business Development Agency of the Department of Commerce.

19.06 ***Anti-Kickback***

A. Contractor shall comply with the Copeland Anti-Kickback Act (40 USC 3145) as supplemented by Department of Labor regulations (29 CFR Part 3, "Contractors and Subcontractors on Public Buildings or Public Works Financed in Whole or in Part by Loans or Grants of the United States"). The Act provides that Contractor or subcontractor shall be prohibited from inducing, by any means, any person employed in the construction, completion, or repair of public facilities, to give up any part of the compensation to which they are otherwise entitled. Owner shall report all suspected or reported violations to Agency.

19.07 ***Clean Air Act (42 U.S.C. 7401-7671q.) and the Federal Water Pollution Control Act (33 U.S.C. 1251-1387), as amended***

A. Contractor to agree to comply with all applicable standards, orders or regulations issued pursuant to the Clean Air Act (42 U.S.C. 7401-7671q) and the Federal Water Pollution Control Act as amended (33 U.S.C. 1251-1387). Violations must be reported to the federal awarding agency and the Regional Office of the Environmental Protection Agency (EPA).

19.08 ***Equal Employment Opportunity***

Copyright© 2018 National Society of Professional Engineers, American Council of Engineering Companies, and American Society of Civil Engineers. All rights reserved.

A. The Contract is considered a federally assisted construction contract. Except as otherwise provided under 41 CFR Part 60, all contracts that meet the definition of "federally assisted construction contract" in 41 CFR Part 60-1.3 must include the equal opportunity clause provided under 41 CFR 60-1.4(b), in accordance with Executive Order 11246, "Equal Employment Opportunity" (30 FR 12319, 12935, 3 CFR Part, 1964-1965 Comp., p. 339), as amended by Executive Order 11375, "Amending Executive Order 11246 Relating to Equal Employment Opportunity," and implementing regulations at 41 CFR part 60, "Office of Federal Contract Compliance Programs, Equal Employment Opportunity, Department of Labor."

19.09 ***Byrd Anti-Lobbying Amendment (31 U.S.C. 1352)***

A. Contractors that apply or bid for an award exceeding $100,000 must file the required certification (RD Instruction 1940-Q Exhibit A-1). The Contractor certifies to the Owner and every subcontractor certifies to the Contractor that it will not and has not used federal appropriated funds to pay any person or organization for influencing or attempting to influence an officer or employee of any agency, a member of Congress, officer or employee of Congress, or an employee of a member of Congress in connection with obtaining the Contract if it is covered by 31 U.S.C. 1352. The Contractor and every subcontractor must also disclose any lobbying with non-federal funds that takes place in connection with obtaining any federal award. Such disclosures are forwarded from tier to tier up to the Owner. Necessary certification and disclosure forms shall be provided by Owner.

19.10 Environmental Requirements

A. When constructing a Project involving trenching and/or other related earth excavations, Contractor shall comply with the following environmental conditions:

1. Wetlands – When disposing of excess, spoil, or other Construction Materials on public or private property, Contractor shall not fill in or otherwise convert wetlands. Floodplains – When disposing of excess, spoil, or other Construction Materials on public or private property, Contractor shall not fill in or otherwise convert 100-year floodplain areas (Standard Flood Hazard Area) delineated on the latest Federal Emergency Management Agency Floodplain Maps, or other appropriate maps, e.g., alluvial soils on

2. NRCS Soil Survey Maps.

3. Historic Preservation - Applicants shall ensure that Contractors maintain a copy of the following inadvertent discovery plan onsite for review:

a. If during the course of any ground disturbance related to any Project, any post review discovery, including but not limited to, any artifacts, foundations, or other indications of past human occupation of the area are uncovered, shall be protected by complying with 36 CFR § 800.13(b)(3) and (c) and shall include the following:

1) All Work, including vehicular traffic, shall immediately stop within a 50 ft. radius around the area of discovery. The Contractor shall ensure barriers are established to protect the area of discovery and notify the Engineer to contact the appropriate RD personnel. The Engineer shall engage a Secretary of the Interior (SOI) qualified professional archeologist to quickly assess the nature and scope of the discovery; implement interim measures to protect

Copyright© 2018 National Society of Professional Engineers, American Council of Engineering Companies, and American Society of Civil Engineers. All rights reserved.

the discovery from looting and vandalism; and establish broader barriers if further historic and/or precontact properties, can reasonably be expected to occur.

2) **The RD personnel shall notify the appropriate RD environmental staff member, the Federal Preservation Officer (FPO), and State Historic Preservation Office (SHPO) immediately. Indian tribe(s) or Native Hawaiian Organization (NHOs) that have an interest in the area of discovery shall be contacted immediately. The SHPO may require additional tribes or NHOs who may have an interest in the area of discovery also be contacted. The notification shall include an assessment of the discovery provided by the SOI qualified professional archeologist.**

3) **When the discovery contains burial sites or human remains, the Contractor shall immediately notify the appropriate RD personnel who will contact the RD environmental staff member, FPO, and the SHPO. The relevant law enforcement authorities shall be immediately contacted by onsite personnel to reduce delay times, in accordance with tribal, state, or local laws including 36 CFR Part 800.13; 43 CFR Part 10, Subpart B; and the Advisory Council on Historic Preservation's Policy Statement Regarding treatment of Burial Sites, Human Remains, or Funerary Objects (February 23, 2007).**

4) **When the discovery contains burial sites or human remains, all construction activities, including vehicular traffic shall stop within a 100 ft. radius of the discovery and barriers shall be established. The evaluation of human remains shall be conducted at the site of discovery by a SOI qualified professional. Remains that have been removed from their primary context and where that context may be in question may be retained in a secure location, pending further decisions on treatment and disposition. RD may expand this radius based on the SOI professional's assessment of the discovery and establish broader barriers if further subsurface burial sites, or human remains can reasonably be expected to occur. RD, in consultation with the SHPO and interested tribes or NHOs, shall develop a plan for the treatment of native human remains.**

5) **Work may continue in other areas of the undertaking where no historic properties, burial sites, or human remains are present. If the inadvertent discovery appears to be a consequence of illegal activity such as looting, the onsite personnel shall contact the appropriate legal authorities immediately if the landowner has not already done so.**

6) **Work may not resume in the area of the discovery until a notice to proceed has been issued by RD. RD shall not issue the notice to proceed until it has determined that the appropriate local protocols and consulting parties have been consulted.**

7) **Inadvertent discoveries on federal and tribal land shall follow the processes required by the federal or tribal entity.**

4. **Endangered Species – Contractor shall comply with the Endangered Species Act, which provides for the protection of endangered and/or threatened species and critical**

Copyright© 2018 National Society of Professional Engineers, American Council of Engineering Companies, and American Society of Civil Engineers. All rights reserved.

habitat. Should any evidence of the presence of endangered and/or threatened species or their critical habitat be brought to the attention of Contractor, Contractor will immediately report this evidence to Owner and a representative of Agency. Construction shall be temporarily halted pending the notification process and further directions issued by Agency after consultation with the U.S. Fish and Wildlife Service.

5. Mitigation Measures – The following environmental mitigation measures are required on this Project: [Insert mitigation measures from the Letter of Conditions here].

19.11 ***Contract Work Hours and Safety Standards Act (40 U.S.C. 3701-3708)***

A. Where applicable, for contracts awarded by the Owner in excess of $100,000 that involve the employment of mechanics or laborers, the Contractor will comply with 40 U.S.C. 3702 and 3704, as supplemented by Department of Labor regulations (29 CFR Part 5). Under 40 U.S.C. 3702 of the Act, the Contractor will compute the wages of every mechanic and laborer on the basis of a standard work week of 40 hours. Work in excess of the standard work week is permissible provided that the worker is compensated at a rate of not less than one and a half times the basic rate of pay for all hours worked in excess of 40 hours in the work week. The requirements of 40 U.S.C. 3704 are applicable to construction work and provide that no laborer or mechanic will be required to work in surroundings or under working conditions which are unsanitary, hazardous or dangerous. These requirements do not apply to the purchases of supplies or materials or articles ordinarily available on the open market, or contracts for transportation or transmission of intelligence.

19.12 ***Debarment and Suspension (Executive Orders 12549 and 12689)***

A. A contract award (see 2 CFR 180.220) must not be made to parties listed on the governmentwide exclusions in the System for Award Management (SAM), in accordance with the OMB guidelines at 2 CFR 180 that implement Executive Orders 12549 (3 CFR part 1986 Comp., p. 189) and 12689 (3 CFR part 1989 Comp., p. 235), "Debarment and Suspension." SAM Exclusions contains the names of parties debarred, suspended, or otherwise excluded by agencies, as well as parties declared ineligible under statutory or regulatory authority other than Executive Order 12549.

19.13 ***Procurement of recovered materials***

A. The Contractor will comply with 2 CFR Part 200.322, "Procurement of recovered materials."

19.14 ***American Iron and Steel***

A. Section 746 of Title VII of the Consolidated Appropriations Act of 2017 (Division A - Agriculture, Rural Development, Food and Drug Administration, and Related Agencies Appropriations Act, 2017) and subsequent statutes mandating domestic preference applies an American Iron and Steel requirement to this project. All iron and steel products used in this project must be produced in the United States. The term "iron and steel products" means the following products made primarily of iron or steel: lined or unlined pipes and fittings, manhole covers and other municipal castings, hydrants, tanks, flanges, pipe clamps and restraints, valves, structural steel, reinforced precast concrete, and Construction Materials.

B. The following waivers apply to this Contract:

1. De Minimis,

Copyright© 2018 National Society of Professional Engineers, American Council of Engineering Companies, and American Society of Civil Engineers. All rights reserved.

2. Minor Components,

3. Pig iron and direct reduced iron.

ARTICLE 20— STATE REQUIREMENTS

20.01 ***Statutory Required Provisions and Requirements***

A. **This Contract is subject to termination pursuant to A.R.S. § 38-511, as may be amended. Pursuant to A.R.S. § 35-394, as may be amended, unless exempt, the Contractor hereby certifies that it is does not use, and agrees not to use during the term of the Contract, any of the following: forced labor of ethnic Uyghurs in the People's Republic of China; any goods or services produced by the forced labor of ethnic Uyghurs in the People's Republic of China; or any contractors, subcontractors, or suppliers that use the forced labor or any goods or services produced by the forced labor of ethnic Uyghurs in the People's Republic of China.**

Copyright© 2018 National Society of Professional Engineers, American Council of Engineering Companies, and American Society of Civil Engineers. All rights reserved.

EXHIBIT A—SOFTWARE REQUIREMENTS FOR ELECTRONIC DOCUMENT EXCHANGE

Item	Electronic Documents	Transmittal Means	Data Format	Note (1)
a.1	General communications, transmittal covers, meeting notices and responses to general information requests for which there is no specific prescribed form.	Email	Email	
a.2	Meeting agendas, meeting minutes, RFI's and responses to RFI's, and Contract forms.	Email w/ Attachment	PDF	(2)
a.3	Contactors Submittals (Shop Drawings, "or equal" requests, substitution requests, documentation accompanying Sample submittals and other submittals) to Owner and Engineer, and Owner's and Engineer's responses to Contractor's Submittals, Shop Drawings, correspondence, and Applications for Payment.	Email w/ Attachment	PDF	
a.4	Correspondence; milestone and final version Submittals of reports, layouts, Drawings, maps, calculations and spreadsheets, Specifications, Drawings and other Submittals from Contractor to Owner or Engineer and for responses from Engineer and Owner to Contractor regarding Submittals.	Email w/ Attachment or LFE	PDF	
a.5	Layouts and drawings to be submitted to Owner for future use and modification.	Email w/ Attachment or LFE	DWG	
a.6	Correspondence, reports and Specifications to be submitted to Owner for future word processing use and modification.	Email w/ Attachment or LFE	DOC	
a.7	Spreadsheets and data to be submitted to Owner for future data processing use and modification.	Email w/ Attachment or LFE	EXC	
a.8	Database files and data to be submitted to Owner for future data processing use and modification.	Email w/ Attachment or LFE	DB	

Notes	
(1)	All exchanges and uses of transmitted data are subject to the appropriate provisions of Contract Documents.
(2)	Transmittal of written notices is governed by Paragraph 18.01 of the General Conditions.

Key	
Email	Standard Email formats (.htm, .rtf, or .txt). Do not use stationery formatting or other features that impair legibility of content on screen or in printed copies
LFE	Agreed upon Large File Exchange method (FTP, CD, DVD, hard drive)
PDF	Portable Document Format readable by Adobe® Acrobat Reader Version
DWG	Autodesk® AutoCAD .dwg format Version **2019**
DOC	Microsoft® Word .docx format
EXC	Microsoft® Excel .xls or .xml format
DB	Microsoft® Access .mdb format

Copyright© 2018 National Society of Professional Engineers, American Council of Engineering Companies, and American Society of Civil Engineers. All rights reserved.

EXHIBIT B—FORESEEABLE BAD WEATHER DAYS

Month	Number of Foreseeable Bad Weather Days in Month Based on Precipitation as Rain Equivalent (inches) (1)	Ambient Outdoor Air Temperature (degrees F)	
		Number of Foreseeable Bad Weather Days in Month Based on Low Temperature (at 11:00 a.m.)	Number of Foreseeable Bad Weather Days in Month Based on High Temperature (at 3:00 p.m.)
January			
February			
March			
April			
May			
June	2 days		3 days
July	3 days		10 days
August	3 days		3 days
September	2 days		2 days
October	2 days		
November			
December			

Notes:

1. Two inches of sleet equal one inch of rain. Five inches of wet, heavy snow equal one inch of rain. Fifteen inches of "dry" powder snow equals one inch of rain.

Copyright© 2018 National Society of Professional Engineers, American Council of Engineering Companies, and American Society of Civil Engineers. All rights reserved.

NOTICE TO PROCEED

Owner:	Town of Jerome	Owner's Project No.:	N/A
Engineer:	PACE	Engineer's Project No.:	B614
Contractor:	Fann Environmental, LLC	Contractor's Project No.:	
Project:	Jerome Wastewater Treatment Plant Improvements		
Contract Name:	Jerome Wastewater Treatment Plant Improvements		
Effective Date of Contract:			

Owner hereby notifies Contractor that the Contract Times under the above Contract will commence to run on **[date Contract Times are to start]** pursuant to Paragraph 4.01 of the General Conditions.

On that date, Contractor shall start performing its obligations under the Contract Documents. No Work will be done at the Site prior to such date.

In accordance with the Agreement: **[Select one of the following two alternatives, insert dates or number of days, and delete the other alternative.]**

The number of days to achieve Substantial Completion is **300** from the date stated above for the commencement of the Contract Times, resulting in a date for Substantial Completion of **[date, calculated from commencement date above]**; and the number of days to achieve readiness for final payment is **330** from the commencement date of the Contract Times, resulting in a date for readiness for final payment of **[date, calculated from commencement date above]**.

Before starting any Work at the Site, Contractor must comply with the following:

- **Provide preliminary schedule**
- **Provide proposed pay application schedule of values for Engineer review**

Owner:	Town of Jerome
By *(signature)*:	
Name *(printed)*:	
Title:	
Date Issued:	

Copy: Engineer

EJCDC® C-550, Notice to Proceed.
Copyright© 2018 National Society of Professional Engineers, American Council of Engineering Companies, and American Society of Civil Engineers. All rights reserved.

Temporary Construction Sign for Rural Development Projects

Recommended Font: Arial

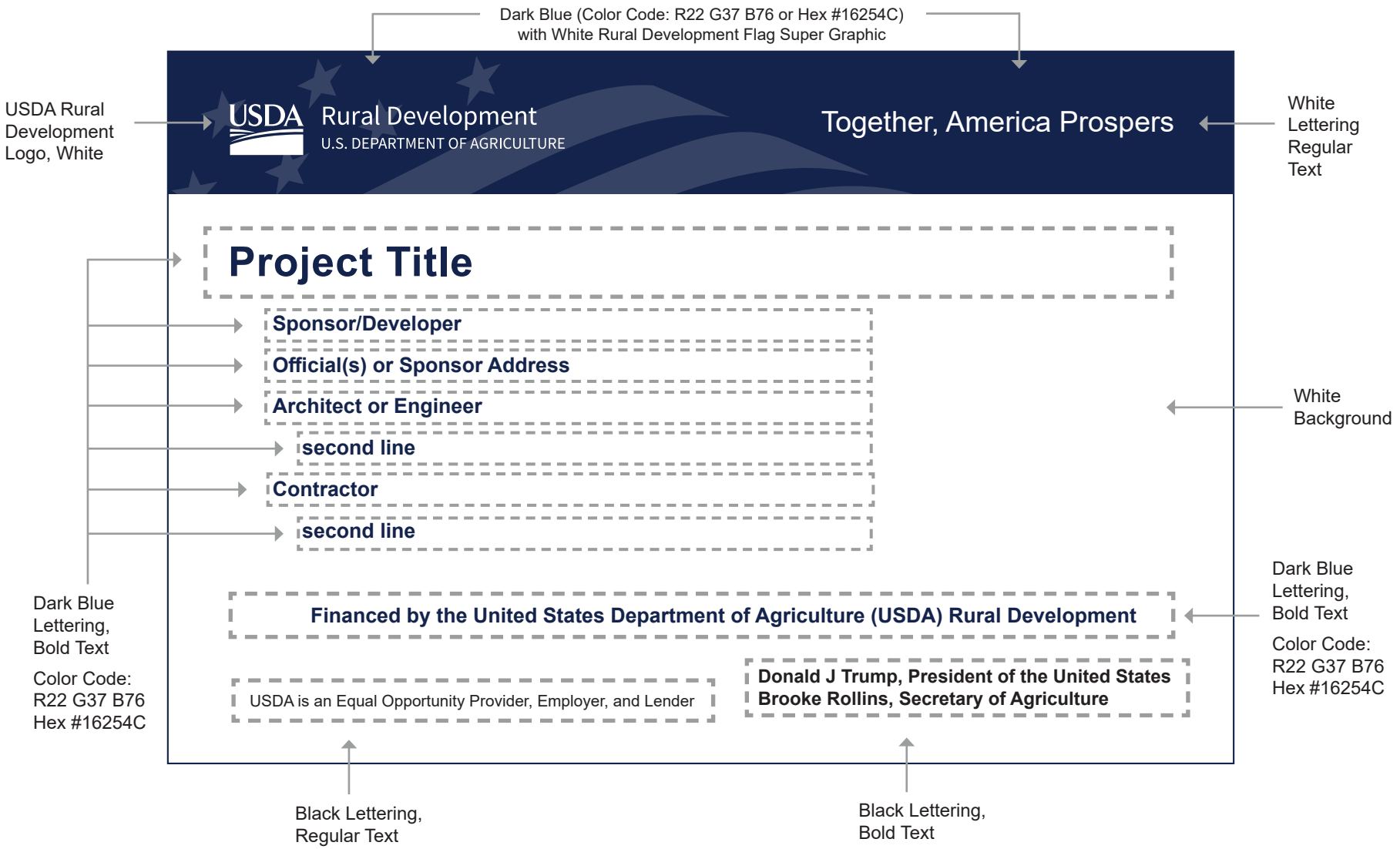

SIGN DIMENSIONS: 1200mm x 2400mm x 19mm (approx.4’ x 8’ x 3/4)
PLYWOOD PANEL (APA RATED A+B GRADE-EXTERIOR)

Contractor's Application for Payment

Owner:	Town of Jerome	**Owner's Project No.:**	N/A
Engineer:	PACE	**Engineer's Project No.:**	B614
Contractor:	Fann Environmental, LLC	**Contractor's Project No.:**	
Project:	Jerome Wastewater Treatment Plant Improvements		
Contract:	Jerome Wastewater Treatment Plant Improvements		
Application No.:		**Application Date:**	
Application Period:	**From**	**to**	

1. Original Contract Price			$ -
2. Net change by Change Orders			$ -
3. Current Contract Price (Line 1 + Line 2)			$ -
4. Total Work completed and materials stored to date (Sum of Column G Lump Sum Total and Column J Unit Price Total)			$ -
5. Retainage			
a. _____ X	$ -	Work Completed =	$ -
b. _____ X	$ -	Stored Materials =	$ -
c. Total Retainage (Line 5.a + Line 5.b)			$ -
6. Amount eligible to date (Line 4 - Line 5.c)			$ -
7. Less previous payments (Line 6 from prior application)			
8. Amount due this application			$ -
9. Balance to finish, including retainage (Line 3 - Line 4 + Line 5.c)			$ -

Contractor's Certification

The undersigned Contractor certifies, to the best of its knowledge, the following:
(1) All previous progress payments received from Owner on account of Work done under the Contract have been applied on account to discharge Contractor's legitimate obligations incurred in connection with the Work covered by prior Applications for Payment;
(2) Title to all Work, materials and equipment incorporated in said Work, or otherwise listed in or covered by this Application for Payment, will pass to Owner at time of payment free and clear of all liens, security interests, and encumbrances (except such as are covered by a bond acceptable to Owner indemnifying Owner against any such liens, security interest, or encumbrances); and
(3) All the Work covered by this Application for Payment is in accordance with the Contract Documents and is not defective.

Contractor: _____

Signature: _____ **Date:** _____

Recommended by Engineer		**Approved by Owner**	
By:		**By:**	
Title:		**Title:**	
Date:		**Date:**	
Approved by Funding Agency			
By:		**By:**	
Title:		**Title:**	
Date:		**Date:**	

(c) 2018 National Society of Professional Engineers for EJCDC. All rights reserved.

Progress Estimate - Lump Sum Work

Contractor's Application for Payment

Owner:	Town of Jerome	**Owner's Project No.:**	N/A
Engineer:	PACE	**Engineer's Project No.:**	B614
Contractor:	Fann Environmental, LLC	**Contractor's Project No.:**	
Project:	Jerome Wastewater Treatment Plant Improvements		
Contract:	Jerome Wastewater Treatment Plant Improvements		

Application No.: _____ **Application Period:** **From** _____ **to** _____ **Application Date:** _____

A	B	C	D	E	F	G	H	I
			Work Completed					
Item No.	Description	Scheduled Value ($)	(D + E) From Previous Application ($)	This Period ($)	Materials Currently Stored (not in D or E) ($)	Work Completed and Materials Stored to Date (D + E + F) ($)	% of Scheduled Value (G / C) (%)	Balance to Finish (C - G) ($)
	Original Contract							
						-		-
						-		-
						-		-
						-		-
						-		-
						-		-
						-		-
						-		-
						-		-
						-		-
						-		-
						-		-
						-		-
						-		-
						-		-
						-		-
						-		-
						-		-
						-		-
						-		-
						-		-
	Original Contract Totals	$ -	$ -	$ -	$ -	$ -		$ -

EJCDC C-620 Contractor's Application for Payment

(c) 2018 National Society of Professional Engineers for EJCDC. All rights reserved.

Progress Estimate - Lump Sum Work

Contractor's Application for Payment

Owner:	Town of Jerome	**Owner's Project No.:**	N/A
Engineer:	PACE	**Engineer's Project No.:**	B614
Contractor:	Fann Environmental, LLC	**Contractor's Project No.:**	
Project:	Jerome Wastewater Treatment Plant Improvements		
Contract:	Jerome Wastewater Treatment Plant Improvements		

Application No.: _____ **Application Period:** **From** _____ **to** _____ **Application Date:** _____

A	B	C	D	E	F	G	H	I
			Work Completed					
Item No.	Description	Scheduled Value ($)	(D + E) From Previous Application ($)	This Period ($)	Materials Currently Stored (not in D or E) ($)	Work Completed and Materials Stored to Date (D + E + F) ($)	% of Scheduled Value (G / C) (%)	Balance to Finish (C - G) ($)
Change Orders								
						-		-
						-		-
						-		-
						-		-
						-		-
						-		-
						-		-
						-		-
						-		-
						-		-
						-		-
						-		-
						-		-
						-		-
						-		-
						-		-
						-		-
						-		-
						-		-
						-		-
						-		-
	Change Order Totals	$ -	$ -	$ -	$ -	$ -		$ -
Original Contract and Change Orders								
	Project Totals	$ -	$ -	$ -	$ -	$ -		$ -

EJCDC C-620 Contractor's Application for Payment
(c) 2018 National Society of Professional Engineers for EJCDC. All rights reserved.

Progress Estimate - Unit Price Work

Contractor's Application for Payment

Owner:	Town of Jerome	**Owner's Project No.:**	N/A
Engineer:	PACE	**Engineer's Project No.:**	B614
Contractor:	Fann Environmental, LLC	**Contractor's Project No.:**	
Project:	Jerome Wastewater Treatment Plant Improvements		
Contract:	Jerome Wastewater Treatment Plant Improvements		

Application No.: _____ **Application Period:** **From** _____ **to** _____ **Application Date:** _____

A	B	C	D	E	F	G	H	I	J	K	L
		Contract Information				Work Completed					
Bid Item No.	Description	Item Quantity	Units	Unit Price ($)	Value of Bid Item (C X E) ($)	Estimated Quantity Incorporated in the Work	Value of Work Completed to Date (E X G) ($)	Materials Currently Stored (not in G) ($)	Work Completed and Materials Stored to Date (H + I) ($)	% of Value of Item (J / F) (%)	Balance to Finish (F - J) ($)
Original Contract											
					-		-		-		-
					-		-		-		-
					-		-		-		-
					-		-		-		-
					-		-		-		-
					-		-		-		-
					-		-		-		-
					-		-		-		-
					-		-		-		-
					-		-		-		-
					-		-		-		-
					-		-		-		-
					-		-		-		-
					-		-		-		-
					-		-		-		-
					-		-		-		-
					-		-		-		-
					-		-		-		-
					-		-		-		-
					-		-		-		-
				Original Contract Totals	$ -		$ -	$ -	$ -		$ -

(c) 2018 National Society of Professional Engineers for EJCDC. All rights reserved.

Progress Estimate - Unit Price Work

Contractor's Application for Payment

Owner:	Town of Jerome	**Owner's Project No.:**	N/A
Engineer:	PACE	**Engineer's Project No.:**	B614
Contractor:	Fann Environmental, LLC	**Contractor's Project No.:**	
Project:	Jerome Wastewater Treatment Plant Improvements		
Contract:	Jerome Wastewater Treatment Plant Improvements		

Application No.: _____ **Application Period:** **From** _____ **to** _____ **Application Date:** _____

A	B	C	D	E	F	G	H	I	J	K	L
		Contract Information				Work Completed					
Bid Item No.	Description	Item Quantity	Units	Unit Price ($)	Value of Bid Item (C X E) ($)	Estimated Quantity Incorporated in the Work	Value of Work Completed to Date (E X G) ($)	Materials Currently Stored (not in G) ($)	Work Completed and Materials Stored to Date (H + I) ($)	% of Value of Item (J / F) (%)	Balance to Finish (F - J) ($)
Change Orders											
					-		-		-		-
					-		-		-		-
					-		-		-		-
					-		-		-		-
					-		-		-		-
					-		-		-		-
					-		-		-		-
					-		-		-		-
					-		-		-		-
					-		-		-		-
					-		-		-		-
					-		-		-		-
					-		-		-		-
					-		-		-		-
					-		-		-		-
					-		-		-		-
					-		-		-		-
					-		-		-		-
					-		-		-		-
					-		-		-		-
				Change Order Totals	$ -		$ -	$ -	$ -		$ -
Original Contract and Change Orders											
				Project Totals	$ -		$ -	$ -	$ -		$ -

EJCDC C-620 Contractor's Application for Payment
(c) 2018 National Society of Professional Engineers for EJCDC. All rights reserved.

Stored Materials Summary

Contractor's Application for Payment

Owner:	Town of Jerome	**Owner's Project No.:**	N/A
Engineer:	PACE	**Engineer's Project No.:**	B614
Contractor:	Fann Environmental, LLC	**Contractor's Project No.:**	
Project:	Jerome Wastewater Treatment Plant Improvements		
Contract:	Jerome Wastewater Treatment Plant Improvements		

Application No.: _____ **Application Period:** **From** _____ **to** _____ **Application Date:** _____

A	B	C	D	E	F	G	H	I	J	K	L	M
						Materials Stored			Incorporated in Work			
Item No. (Lump Sum Tab) or Bid Item No. (Unit Price Tab)	Supplier Invoice No.	Submittal No. (with Specification Section No.)	Description of Materials or Equipment Stored	Storage Location	Application No. When Materials Placed in Storage	Previous Amount Stored ($)	Amount Stored this Period ($)	Amount Stored to Date (G+H) ($)	Amount Previously Incorporated in the Work ($)	Amount Incorporated in the Work this Period ($)	Total Amount Incorporated in the Work (J+K) ($)	Materials Remaining in Storage (I-L) ($)
								-			-	-
								-			-	-
								-			-	-
								-			-	-
								-			-	-
								-			-	-
								-			-	-
								-			-	-
								-			-	-
								-			-	-
								-			-	-
								-			-	-
								-			-	-
								-			-	-
								-			-	-
								-			-	-
								-			-	-
								-			-	-
								-			-	-
								-			-	-
								-			-	-
					Totals	$ -	$ -	$ -	$ -	$ -	$ -	$ -

EJCDC C-620 Contractor's Application for Payment
(c) 2018 National Society of Professional Engineers for EJCDC. All rights reserved.

WORK CHANGE DIRECTIVE NO.: [Number of Work Change Directive]

Owner:	Town of Jerome	Owner's Project No.:	N/A
Engineer:	PACE	Engineer's Project No:	B614
Contractor:	Fann Environmental, LLC	Contractor's Project No.:	
Project:	Jerome Wastewater Treatment Plant Improvements		
Contract Name:	Jerome Wastewater Treatment Plant Improvements		
Date Issued:		Effective Date of Work Change Directive:	

Contractor is directed to proceed promptly with the following change(s):

Description:

[Description of the change to the Work]

Attachments:

[List documents related to the change to the Work]

Purpose for the Work Change Directive:

[Describe the purpose for the change to the Work]

Directive to proceed promptly with the Work described herein, prior to agreeing to change in Contract Price and Contract Time, is issued due to:

Notes to User—Check one or both of the following

☐ Non-agreement on pricing of proposed change. ☐ Necessity to proceed for schedule or other reasons.

Estimated Change in Contract Price and Contract Times (non-binding, preliminary):

Contract Price: $ _____ **[increase] [decrease] [not yet estimated]**.

Contract Time: _____ days **[increase] [decrease] [not yet estimated]**.

Basis of estimated change in Contract Price:

☐ Lump Sum ☐ Unit Price ☐ Cost of the Work ☐ Other

	Recommended by Engineer	Authorized by Owner
By:	_____	_____
Title:	_____	_____
Date:	_____	_____

Copyright© 2018 National Society of Professional Engineers, American Council of Engineering Companies, and American Society of Civil Engineers. All rights reserved.

CHANGE ORDER NO.: [Number of Change Order]

Owner:	Town of Jerome	Owner's Project No.:	N/A
Engineer:	PACE	Engineer's Project No.:	B614
Contractor:	Fann Environmental, LLC	Contractor's Project No.:	
Project:	Jerome Wastewater Treatment Plant Improvements		
Contract Name:	Jerome Wastewater Treatment Plant Improvements		
Date Issued:		Effective Date of Change Order:	

The Contract is modified as follows upon execution of this Change Order:

Description:

[Description of the change]

Attachments:

[List documents related to the change]

Change in Contract Price	**Change in Contract Times [State Contract Times as either a specific date or a number of days]**
Original Contract Price: $ _____	Original Contract Times: Substantial Completion: _____ Ready for final payment: _____
[Increase] [Decrease] from previously approved Change Orders No. 1 to No. **[Number of previous Change Order]**: $ _____	**[Increase] [Decrease]** from previously approved Change Orders No.1 to No. **[Number of previous Change Order]**: Substantial Completion: _____ Ready for final payment: _____
Contract Price prior to this Change Order: $ _____	Contract Times prior to this Change Order: Substantial Completion: _____ Ready for final payment: _____
[Increase] [Decrease] this Change Order: $ _____	**[Increase] [Decrease]** this Change Order: Substantial Completion: _____ Ready for final payment: _____
Contract Price incorporating this Change Order: $ _____	Contract Times with all approved Change Orders: Substantial Completion: _____ Ready for final payment: _____

	Recommended by Engineer (if required)	Accepted by Contractor
By:	_____	_____
Title:	_____	_____
Date:	_____	_____
	Authorized by Owner	Approved by Funding Agency (if applicable)
By:	_____	_____
Title:	_____	_____
Date:	_____	_____

Copyright© 2018 National Society of Professional Engineers, American Council of Engineering Companies and American Society of Civil Engineers. All rights reserved.

FIELD ORDER NO.: [Number of Field Order]

Owner:	Town of Jerome	Owner's Project No.:	N/A
Engineer:	PACE	Engineer's Project No.:	B614
Contractor:	Fann Environmental, LLC	Contractor's Project No.:	
Project:	Jerome Wastewater Treatment Plant Improvements		
Contract Name:	Jerome Wastewater Treatment Plant Improvements		
Date Issued:		Effective Date of Field Order:	

Contractor is hereby directed to promptly perform the Work described in this Field Order, issued in accordance with Paragraph 11.04 of the General Conditions, for minor changes in the Work without changes in Contract Price or Contract Times. If Contractor considers that a change in Contract Price or Contract Times is required, submit a Change Proposal before proceeding with this Work.

Reference:

Specification Section(s):

Drawing(s) / Details (s):

Description:

[Description of the change to the Work]

Attachments:

[List documents supporting change]

Issued by Engineer

By: _____

Title: _____

Date: _____

Copyright© 2018 National Society of Professional Engineers, American Council of Engineering Companies and American Society of Civil Engineers. All rights reserved.

GENERAL (PRIME) CONTRACTOR'S CERTIFICATION OF COMPLIANCE

Notes to User: This exhibit is the sample General (Prime) Contractor's Certification of Compliance with the American Iron and Steel requirements to be provided by all General (Prime) Contractors to Engineer for delivery to the Owner at Substantial Completion.

GENERAL (PRIME) CONTRACTOR'S CERTIFICATION OF COMPLIANCE WITH PROVISIONS OF THE AMERICAN IRON AND STEEL REQUIREMENTS OF SECTION 746 OF TITLE VII OF THE CONSOLIDATED APPROPRIATIONS ACT OF 2017 (DIVISION A - AGRICULTURE, RURAL DEVELOPMENT, FOOD AND DRUG ADMINISTRATION, AND RELATED AGENCIES APPROPRIATIONS ACT, 2017) AND SUBSEQUENT STATUTES MANDATING DOMESTIC PREFERENCE

DATE:

RE: PROJECT NAME
APPLICANT
CONTRACT NUMBER

I hereby certify that to the best of my knowledge and belief all Iron and Steel products installed for this project by my company and by any and all subcontractors and Manufacturers my company has contracted with for this project comply with Section 746 of Title VII of the Consolidated Appropriations Act of 2017 (Division A - Agriculture, Rural Development, Food and Drug Administration, and Related Agencies Appropriations Act, 2017) and subsequent statutes mandating domestic preference or are the subject of a waiver approved by the Secretary of Agriculture or designee.

_____
Name of Construction Company (PRINT)

_____
By Authorized Representative (SIGNATURE)

_____
Title

MANUFACTURER'S CERTIFICATION OF COMPLIANCE

Notes to User: This exhibit is the sample Manufacturer's Certification of Compliance with the American Iron and Steel requirements to be provided by all Manufacturers of American Iron and Steel covered items, to be submitted by Contractor to the Engineer with the corresponding Shop Drawing submittal for delivery to the Owner at Substantial Completion.

EXAMPLE OF A MANUFACTURER'S CERTIFICATION OF COMPLIANCE WITH PROVISIONS OF THE AMERICAN IRON AND STEEL (AIS) REQUIREMENTS OF SECTION 746 OF TITLE VII OF THE CONSOLIDATED APPROPRIATIONS ACT OF 2017 (DIVISION A - AGRICULTURE, RURAL DEVELOPMENT, FOOD AND DRUG ADMINISTRATION, AND RELATED AGENCIES APPROPRIATIONS ACT, 2017) AND SUBSEQUENT STATUTES MANDATING DOMESTIC PREFERENCE

Date:

Company Name:

Company Address:

Subject: American Iron and Steel (AIS) Certification for Project (X), Owner's Name, and Contract Number

I, (company representative), certify that the (melting, bending, galvanizing, cutting, etc.) processes for (manufacturing or fabricating) the following products and/or material shipped or provided for the subject project is in full compliance with the AIS requirement as mandated by Section 746 of Title VII of the Consolidated Appropriations Act of 2017 (Division A - Agriculture, Rural Development, Food and Drug Administration, and Related Agencies Appropriations Act, 2017) and subsequent statutes mandating domestic preference.
Item, Products and/or Materials, and location of delivery (City, State):

1.

2.
Such processes for AIS took place at the following location:

_____
(City, State)

_____
Authorized Company Representative Signature

Notes: Authorized signature will be Manufacturer's representative, not the material distributor or Supplier. If any of the above compliance statements change while providing materials to this project, please immediately notify the person(s) who is requesting to use your product(s).

CERTIFICATE OF SUBSTANTIAL COMPLETION

Owner:	Town of Jerome	Owner's Project No.:	N/A
Engineer:	PACE	Engineer's Project No.:	B614
Contractor:	Fann Environmental, LLC	Contractor's Project No.:	
Project:	Jerome Wastewater Treatment Plant Improvements		
Contract Name:	Jerome Wastewater Treatment Plant Improvements		

This ☐ Preliminary ☐ Final Certificate of Substantial Completion applies to:

☐ All Work ☐ The following specified portions of the Work:

[Describe the portion of the work for which Certificate of Substantial Completion is issued]

Date of Substantial Completion: **[Enter date, as determined by Engineer]**

The Work to which this Certificate applies has been inspected by authorized representatives of Owner, Contractor, and Engineer, and found to be substantially complete. The Date of Substantial Completion of the Work or portion thereof designated above is hereby established, subject to the provisions of the Contract pertaining to Substantial Completion. The date of Substantial Completion in the final Certificate of Substantial Completion marks the commencement of the contractual correction period and applicable warranties required by the Contract.

A punch list of items to be completed or corrected is attached to this Certificate. This list may not be all-inclusive, and the failure to include any items on such list does not alter the responsibility of the Contractor to complete all Work in accordance with the Contract Documents.

Amendments of contractual responsibilities recorded in this Certificate should be the product of mutual agreement of Owner and Contractor; see Paragraph 15.03.D of the General Conditions.

The responsibilities between Owner and Contractor for security, operation, safety, maintenance, heat, utilities, insurance, and warranties upon Owner's use or occupancy of the Work must be as provided in the Contract, except as amended as follows:

Amendments to Owner's Responsibilities: ☐ None ☐ As follows:

[List amendments to Owner's Responsibilities]

Amendments to Contractor's Responsibilities: ☐ None ☐ As follows:

[List amendments to Contractor's Responsibilities]

The following documents are attached to and made a part of this Certificate:

[List attachments such as punch list; other documents]

This Certificate does not constitute an acceptance of Work not in accordance with the Contract Documents, nor is it a release of Contractor's obligation to complete the Work in accordance with the Contract Documents.

Engineer

By *(signature)*: _____

Name *(printed)*: _____

Title: _____

Copyright© 2018 National Society of Professional Engineers, American Council of Engineering Companies, and American Society of Civil Engineers. All rights reserved.

NOTICE OF ACCEPTABILITY OF WORK

Owner:	Town of Jerome	Owner's Project No.:	N/A
Engineer:	PACE	Engineer's Project No.:	B614
Contractor:	Fann Environmental, LLC	Contractor's Project No.:	
Project:	Jerome Wastewater Treatment Plant Improvements		
Contract Name:	Jerome Wastewater Treatment Plant Improvements		
Notice Date:		Effective Date of the Construction Contract:	

The Engineer hereby gives notice to the Owner and Contractor that Engineer recommends final payment to Contractor, and that the Work furnished and performed by Contractor under the Construction Contract is acceptable, expressly subject to the provisions of the Construction Contract's Contract Documents ("Contract Documents") and of the Agreement between Owner and Engineer for Professional Services dated **July 28, 2022** ("Owner-Engineer Agreement"). This Notice of Acceptability of Work (Notice) is made expressly subject to the following terms and conditions to which all who receive and rely on said Notice agree:

1. This Notice has been prepared with the skill and care ordinarily used by members of the engineering profession practicing under similar conditions at the same time and in the same locality.
2. This Notice reflects and is an expression of the Engineer's professional opinion.
3. This Notice has been prepared to the best of Engineer's knowledge, information, and belief as of the Notice Date.
4. This Notice is based entirely on and expressly limited by the scope of services Engineer has been employed by Owner to perform or furnish during construction of the Project (including observation of the Contractor's Work) under the Owner-Engineer Agreement, and applies only to facts that are within Engineer's knowledge or could reasonably have been ascertained by Engineer as a result of carrying out the responsibilities specifically assigned to Engineer under such Owner-Engineer Agreement.
5. This Notice is not a guarantee or warranty of Contractor's performance under the Construction Contract, an acceptance of Work that is not in accordance with the Contract Documents, including but not limited to defective Work discovered after final inspection, nor an assumption of responsibility for any failure of Contractor to furnish and perform the Work thereunder in accordance with the Contract Documents, or to otherwise comply with the Contract Documents or the terms of any special guarantees specified therein.
6. This Notice does not relieve Contractor of any surviving obligations under the Construction Contract, and is subject to Owner's reservations of rights with respect to completion and final payment.

Engineer

By *(signature)*: _____

Name *(printed)*: _____

Title: _____

Copyright© 2018 National Society of Professional Engineers, American Council of Engineering Companies, and American Society of Civil Engineers. All rights reserved.

Town of Jerome

WASTEWATER TREATMENT PLANT IMPROVEMENTS

TECHNICAL SPECIFICATIONS





PREPARED FOR:

Town of Jerome
600 Clark Street
Jerome, AZ 86331

PREPARED BY:

PACE
Advanced Water Engineering

8723 E. Via de Commercio #A-204
Scottsdale, AZ 85258
480.991.3595 | www.pacewater.com

#B614 | November 2025

Technical Specifications

Town of Jerome
Wastewater Treatment Plant Improvements

November 2025

Prepared For:

Town of Jerome
600 Clark Street
P.O. Box 335
Jerome, AZ 86331

Prepared By:

Pacific Advanced Civil Engineering, Inc.
8723 E Via de Commercio #A-204, Scottsdale, AZ 85258
*P:*480-991-3595 *F:*480-751-1810

Registered Professional Engineer (Civil)
CERTIFICATE NO.
70097
TAYLOR B.
PIERCE
Date Signed: 11/20/25
ARIZONA, U.S.A.

Contact Person:

Taylor Pierce, PE
Mike Krebs, PE

PACE JN #B614

SECTION 00 0110 – CONTRACT DOCUMENTS TABLE OF CONTENTS

TECHNICAL SPECIFICATIONS

DIVISION 00 – PROCUREMENT AND CONTRACTING REQUIREMENTS

00 0110 Table of Contents
00 7000 Conditions of the Contract

DIVISION 01 - GENERAL REQUIREMENTS

01 1100 Summary of Work
01 1400 Work Restrictions
01 2000 Price and Payment Procedures
01 3216 Construction Progress Schedules
01 3300 Submittal Procedures
01 3529 Health, Safety, and Emergency Response Procedures
01 4219 Reference Standards
01 4333 Manufacturer's Field Services
01 4500 Quality Control
01 5626 Temporary Fencing
01 5713 Temporary Erosion and Sediment Control
01 5719 Temporary Environmental Controls
01 5726 Site Watering for Dust Control
01 7113 Mobilization
01 7123 Field Engineering
01 7700 Closeout Procedures
01 7823 Operation and Maintenance Data
01 7839 Project Record Documents
01 7900 Demonstration and Training

DIVISION 02 – EXISTING CONDITIONS

02 0100 Maintenance of Existing Conditions
02 4000 Demolition and Structure Moving
02 9600 Temporary Bypass Piping Systems

DIVISION 03 – CONCRETE

03 1500 Concrete Accessories
03 1516 Concrete Construction Joints
03 2000 Concrete Reinforcing
03 3000 Cast-in-Place Concrete
03 4110 Precast Concrete Utility Structures
03 6000 Grouting
03 6423 Epoxy Injection Grouting

DIVISION 04 – MASONRY

04 2200 Concrete Unit Masonry

DIVISION 05 – METALS

05 1213 Structural Steel
05 3123 Metal Roof Decking
05 5013 Metal Fabrications
05 5100 Metal Stairs
05 5133 Metal Ladders
05 5213 Pipe and Tube Railings
05 5300 Metal Gratings
05 5410 Safety Hatches

DIVISION 06 – WOODS AND PLASTICS

06 1000 Rough Carpentry

DIVISION 07 – THERMAL AND MOISTURE PROTECTION

07 2100 Thermal Insulation
07 5400 Thermoplastic Membrane Roofing
07 6100 Sheet Metal Roofing
07 6200 Sheet Metal Flashing and Trim
07 7200 Roof Accessories
07 9200 Joint Sealants

DIVISION 08 – OPENINGS

08 1100 Metal Doors and Frames
08 5113 Aluminum Windows
08 7100 Door Hardware
08 80 00 Glazing
08 9100 Louvers

DIVISION 09 – FINISHES

09 2200 Supports for Plaster and Gypsum Board
09 2900 Gypsum Board
09 3000 Ceramic Tile
09 5113 Acoustical Panel Ceilings
09 5300 Acoustical Ceiling Suspension Assemblies
09 9100 Painting
09 9700 Special Coatings

SECTION 00 0110 – CONTRACT DOCUMENTS TABLE OF CONTENTS

DIVISION 10 – SPECIALTIES

10 1400 Signage
10 2813 Toilet Accessories
10 4416 Fire Extinguishers

DIVISION 11 – EQUIPMENT

11 53 00 Lab Equipment

DIVISION 12 – FURNISHINGS

12 3553.13 Metal Laboratory Casework

DIVISION 22 – PLUMBING

22 0529 Hangers and Supports for Plumbing Piping and Equipment
22 1000 Plumbing Piping

DIVISION 23 – HEATING, VENTILATING, AND AIR CONDITIONING (HVAC)

23 0000 Heating, Ventilating, and Air Conditioning (HVAC)

DIVISION 26 – ELECTRICAL

26 0126 Maintenance Testing of Electrical Systems
26 0500 Common Work Results for Electrical
26 0519 Low-Voltage Electrical Power Cables
26 0523 Instrumentation and Communication Cables
26 0526 Grounding and Bonding for Electrical Systems
26 0529 Hangers and Supports for Electrical Systems
26 0533.13 Conduit for Electrical Systems
26 0533.16 Boxes for Electrical Systems
26 0553 Identification for Electrical Systems
26 0573 Overcurrent Protective Device Coordination Study
26 0583 Wiring Connections
26 0916 Electrical Controls, Relays, and Alarms
26 2200 Low-Voltage Transformers
26 2413 Switchboards
26 2416 Panelboards
26 2726 Wiring Devices
26 2733 Power Distribution Units
26 2813 Fuses
26 2816 Enclosed Switches and Circuit Breakers
26 2913 Enclosed Motor Controllers
26 3213 Generator Set – Diesel
26 3353 Static Uninterruptible Power Supply

DIVISION 26 – ELECTRICAL, Continued

26 3600 Automatic Transfer
26 4100 Facility Lightning Protection
26 4313 Surge Protective Devices for Low-Voltage Electrical Power Circuits
26 5000 Lighting

DIVISION 28 – ELECTRONIC SAFETY AND SECURITY

28 3146 Fire Detection and Alarm

DIVISION 31 – EARTHWORK

31 0000 Earthwork
31 0519.16 Geomembrane for Earthwork
31 1000 Site Clearing and Grubbing
31 2319 Dewatering
31 2333 Trenching and Backfilling
31 2524 Rockfall Barrier
31 3700 Riprap

DIVISION 32 – EXTERIOR IMPROVEMENTS

32 1216 Asphalt Paving
32 1313 Concrete Paving
32 1600 Curbs, Gutter, Sidewalks, and Driveways
32 3113 Chain Link Fences and Gates

DIVISION 33 – UTILITIES

33 0112 Hydrostatic Testing
33 0130.13 Sewer and Manhole Testing
33 0519 Ductile-Iron Utility Pipe
33 0524.13 Steel Pipe and Tubing for Air and Gas Service
33 0531 Polyvinyl Chloride Pipe
33 0531.19 Fusible Polyvinyl Chloride Pipe
33 0561 Concrete Manholes
33 3216 Packaged Utility Lift Stations

DIVISION 40 – PROCESS INTEGRATION

40 0500.13 Common Work Results for Process Piping
40 0513.53 Ductile, Malleable, and Cast-Iron Alloys Process Piping
40 0523.06 Weir Gates
40 0531 Plastic Pipe and Tubing
40 0533 High Density Polyethylene Solid Wall Pipe
40 0551 Common Work Results for Process Valves

DIVISION 40 – PROCESS INTEGRATION, Continued

40 0557 Actuators for Process Valves and Gates
40 0561 Gate Valves
40 0562 Plug Valves
40 0563 Ball Valves
40 0564 Butterfly Valves
40 0565 Check Valves
40 0567 Specialized Pressure and Flow Control Valves
40 0573 Miscellaneous Process Valves
40 0597 Identification for Process Piping
40 4200 Process Piping and Equipment Insulation
40 6113 Instrumentation and Control for Process Systems
40 6196 Process Control Descriptions
40 6653 Radio Communications Equipment
40 6700 Local Control Panels
40 7000 Field Instrumentation

DIVISION 41 – MATERIAL PROCESS & HANDLING EQUIPMENT

41 2200 Cranes and Hoists

DIVISION 43 – PROCESS HANDLING AND STORAGE EQUIPMENT

43 2513 Submersible Sewage Pumps

DIVISION 46 – WATER AND WASTEWATER EQUIPMENT

46 21 11 Climber-Type Bar Screens
46 36 53 Chemical Tablet Feeding Equipment
46 53 53 Sequencing Batch Reactor Equipment
46 76 00 Sludge Dewatering Equipment

APPENDICES

Appendix A – Geotechnical Evaluation
Appendix B – MAG Standard Specifications

END OF SECTION

SECTION 00 7000 – CONDITIONS OF THE CONTRACT

PART 1 – GENERAL

1.01 CONTRACT DOCUMENTS

The Contract Documents which constitute the contract between the OWNER and the CONTRACTOR with regard to the subject matter as set forth in Section I of such contract ("Contract Agreement") and include the Contract Agreement, plans, drawings, and the technical specifications.

All terms and conditions established in the Contract Agreement shall supersede all general conditions of these specifications to be followed in the event of any conflict or discrepancies.

1.02 DEFINITIONS AND MEANINGS OF TERMS

Whenever in the Contract Documents the following terms or pronouns referring to them are used, the intent and meaning shall be interpreted as follows which shall be applicable to both the singular and plural thereof:

A. The Contract shall mean the Contract executed by the OWNER and the CONTRACTOR, of which these General Conditions form a part; the terms Contract and Agreement are synonymous.

B. The term OWNER shall mean the respective party to the Contract; the OWNER being the Town of Jerome. The term OWNER may also mean consultants, engineers, or other professionals contracted by the OWNER to review, supervise, or consult on the project.

C. The term County shall mean Yavapai County, AZ.

D. The term CONTRACTOR shall mean the respective party to the contract.

E. The term SUBCONTRACTOR shall mean any individual, partnership or corporation having a direct contract with the CONTRACTOR to perform any part of the work.

F. The term ENGINEER shall mean Pacific Advanced Civil Engineering, Inc. (PACE).

G. Addenda shall mean written or graphic instruments issued prior to the execution of the Agreement which modify or interpret the Contract Documents, Final Design Plans, by additions, deletions, clarifications, or corrections.

H. Bonds shall mean Performance and Payment Bonds and other instruments of security, furnished by the CONTRACTOR and its surety in accordance with the Contract Documents.

I. Change Order shall mean a written order to the CONTRACTOR authorizing an addition, deletion, or revision in the WORK within the general scope of the Contract Documents, or authorizing an adjustment in the Contract price or Contract time.

J. Contractual Agreement shall mean the signed agreement between the OWNER and the CONTRACTOR for the work intended.

K. Contract Documents shall have the meaning described in Section 1.01 herein.

L. Contract price shall mean the total monies payable to the CONTRACTOR under the terms and conditions of the Contract Documents.

M. Contract time in days shall mean the number of consecutive calendar days stated in the Contract Documents for the completion of the Work.

N. Drawings shall mean the part of the Contract Documents, which show the characteristics and scope of the Work to be performed and which have been prepared or approved by the ENGINEER.

O. Notice to proceed shall mean written communication issued by the OWNER to the CONTRACTOR authorizing him to proceed with the Work and establishing the date of commencement of the Work.

P. Project shall mean the undertaking to be performed as provided in the Contract Documents.

Q. Submittals shall mean all drawings, diagrams, illustrations, brochures, schedules, and other data which are prepared by the CONTRACTOR, a subcontractor, manufacturer, supplier, or distributor, which illustrate how specific portions of the Work shall be fabricated or installed; the terms shop drawings and submittals are synonymous.

R. Specifications shall mean a part of the Contract Documents consisting of written descriptions of a technical nature of materials, equipment, construction systems, standards, and workmanship.

S. Substantial completion shall have the meaning defined in the Contract Agreement.

T. Suppliers shall mean any person, supplier or organization who supplies materials or equipment for the Work, including that fabricated to a special design, but who does not perform labor at the site.

U. Work shall mean all (i) obligations, responsibilities and duties undertaken by the CONTRACTOR in order to successfully construct, complete and operate (for Startup Completion) the Project, including all labor, materials, equipment and other incidentals, and the furnishing thereof, (ii) Design and Engineering Services, (iii) Training Services, and (iv) Initial Operations, pursuant to the Contract Documents.

V. Written notice shall mean any notice to any party of the Agreement relative to any part of this Agreement in writing and considered delivered and the service thereof completed, when posted by certified or registered mail to the said party at his last given address, or delivered in person to said party of his authorized representative on the Work.

W. Engineering Supplemental Information (ESI) shall mean written communications issued by the ENGINEER to the CONTRACTOR providing the CONTRACTOR with additional clarifications of the Contract Documents that the ENGINEER deems necessary to ensure the design intent.

X. Request for Information (RFI) shall mean written communications issued by the CONTRACTOR to the ENGINEER requesting additional information or clarification regarding a specific item in the Contract Documents.

1.03 CONTRACTOR'S RESPONSIBILITY

A. General: It is the responsibility of the CONTRACTOR and each subcontractor to visit the site and satisfy himself as to the various existing conditions affecting the work as required.

B. Underground Utilities: The information shown on the drawings was obtained from drawings furnished by the OWNER, and surveys furnished to the OWNER. The CONTRACTOR shall make such investigation as deemed necessary to be satisfied as to the actual location, size, type of material, buried depth, and other factors relating to these services.

1.04 PERMITS, FEES, AND SALES TAX

A. The CONTRACTOR shall submit the required fees, drawings, and application for the applicable permits prior to commencement of work.

B. A summary of local permits are as follows:
   1. Yavapai County
      i. Building Permit
      ii. Grading Permit

2. SWPPP – NOI, BMP Plan & Monitoring Plan in accordance with these Specifications.
3. Dust Control – in accordance with these Specifications.
4. This Permit summary is provided for convenience to the CONTRACTOR and does not relieve the CONTRACTOR from the responsibility of obtaining any additional required Permits not listed for the construction of this facility.

C. CONTRACTOR shall pay all sales tax applicable to the work.

1.05 PRE-CONSTRUCTION MEETING

A. General: Before issuance of Notice to Proceed, a pre-construction meeting shall be held at the location, date and time designated by ENGINEER and OWNER. Attendees shall include the ENGINEER, OWNER's representatives, General CONTRACTOR's project manager and field superintendent, and representatives from each subcontractor for the project as appropriate.

1.06 CONSTRUCTION PROGRESS MEETINGS

A. Progress meetings shall be held according to the agreed upon schedule. All matters bearing on progress and performance of the work since preceding progress meeting shall be discussed and resolved including, without limitation, any previously unresolved matters, deficiencies in the work or methods being employed for the work, and problems, difficulties, or delays which may be encountered.

1.07 PROTECTION OF WORK

A. CONTRACTOR shall provide all protection required to ensure that all work completed will not be harmed.

B. The CONTRACTOR may at his option and expense install any lawful security measures he deems necessary to protect his materials, equipment, or finished work. Type of security devices or quantity shall be the sole responsibility of the CONTRACTOR. The CONTRACTOR is to provide security and protect the project until the OWNER has occupied the space or OWNER has accepted the space.

C. Protection:
1. The CONTRACTOR shall be solely responsibility for the protection of all materials and work.
2. The CONTRACTOR shall include in his proposal the cost of any temporary partitions, sheathing, plastic covering, etc., as may be required to maintain affected areas. Remove all such temporary work at the proper time during the construction period and repair all damage related to same.
3. The CONTRACTOR is solely responsible for the protection of the area in which work is being performed.
4. Provide construction fencing as required to secure the site in accordance with these Specifications.

1.08 ACCESS TO SITE

A. All access to the site by the General CONTRACTOR, Subcontractors, workmen, material/equipment suppliers, etc., shall be via approved access locations as designated by the OWNER. All vehicular or equipment activity shall be strictly confined to the construction limits as indicated by OWNER.

B. Remove all temporary construction and temporary facilities at close of the job or when no longer needed.

1.09 MATERIALS TESTING

A. All materials to be incorporated into the work shall be subject to sampling, testing, and approval as required by specifications. OWNER shall be responsible for retaining the services of an independent testing agency for special inspections.

B. All materials and/or equipment shall be handled in such a manner as to preserve their quality and fitness for the work.

C. Unless otherwise specified, samples and tests shall be made in accordance with either: The Standard Methods of AASHTO, ASTM, ASME, or ADOT which were in effect and published at the time of advertising for bids. The laboratory responsible for the test(s) shall furnish at least one copy of the test results to the CONTRACTOR, the ENGINEER, and to the appropriate material supplier.

D. All materials and/or equipment not conforming to the requirements of the Specifications, whether in place or not, will be rejected. Rejected materials and/or equipment shall be removed immediately from the site of work unless otherwise permitted by the ENGINEER. No rejected material and/or equipment, the defects of which have been subsequently corrected, shall be used until approved in writing by the ENGINEER. CONTRACTOR shall be responsible for re-testing of all rejected materials.

1.10 SPECIAL INSPECTIONS

A. Various categories for inspection/observation of work progress during the course of construction are listed, but not limited to specifications and notes in the drawings. The OWNER requires on-site observation of the work at these various stages prior to covering the work. A list of such inspections will be reviewed at the Pre-Construction Conference and subsequent job meetings, and it is understood that the CONTRACTOR will not cover work until such observation has been completed. The OWNER and OWNER representatives will be responsible for reasonable cooperation with CONTRACTOR requests for observation of the work. The CONTRACTOR shall include anticipated observation requests at weekly update of scheduled activities.

1.11 PRIOR APPROVALS

A. If the General or Prime CONTRACTOR wishes to use items of equipment and/or materials other than those identified in the drawings or specifications, a written request for approval shall be submitted to the ENGINEER prior to the confirmation of contract price. Any request submitted after this time are not under obligation to be accepted. Request from subcontractors will not be considered.

B. Proposed substitutions that have not received prior approval are undertaken at the CONTRACTOR's risk to be deemed equivalent during the construction submittal process.

C. Each request shall include all basic data and characteristics clearly legible. The specified item as well as the proposed item shall be formatted in such manner that a direct comparison can be readily made. ENGINEER shall not be required to perform research to accomplish the comparison. It is the bidder's responsibility to submit complete descriptive and technical information for the ENGINEER and OWNER to perform a complete and proper appraisal.

D. If alternate manufacturers are accepted, the CONTRACTOR shall be responsible for any and all re-design or re-engineering required to accommodate alternate products. Change order proposals that add cost to the project as the result of redesign requirements for alternate manufacturers, or as the result of alternate manufacturers that do not meet the requirements of the construction documents, will not be accepted.

1.12 FINAL DESIGN PLANS

A. The intent of the Final Design Plans is that the CONTRACTOR shall furnish all labor, materials, tools, equipment, and transportation necessary for the proper execution of the Work in accordance with the Contract Documents and all incidental work necessary to complete the project in an acceptable manner, ready for use, occupancy, or operation by the OWNER.

B. The CONTRACTOR shall keep one set of the Final Design Plans on the site of the work. This set shall be kept current by the addition of all reviewed changes, addenda, and amendments thereto.

C. The Final Design Plans are intended to be explanatory to each other, but should any discrepancy appear or any misunderstanding arise as to the importance of anything contained in either, the CONTRACTOR shall obtain the necessary interpretation from the ENGINEER. Corrections of errors or omissions in the Final Design Plans may be made by the CONTRACTOR; when such corrections are necessary for the proper fulfillment of their intention. However, any changes or corrections to be performed after Notice to Proceed shall require the approval of both the ENGINEER and the CONTRACTOR.

D. All work or materials shown on the Plans and not mentioned in the Specifications, or any work specified and not shown on the Plans, shall be furnished, performed, and done by the CONTRACTOR as if same were both mentioned in the Specifications and shown on the Drawings. Conflicts or discrepancies within the plans and/or specifications and between the plans and specifications, the stricter interpretation shall apply unless approved by the Engineer of Record.

1.13 SUBMITTAL/SHOP DRAWINGS

A. The CONTRACTOR shall submit shop and working drawings of concrete reinforcement, structural details, piping layout, wiring, materials, and equipment fabricated especially for the Contract, and materials and equipment for which such drawings are specifically requested within these Contract Documents.

B. Such drawings shall show the principal dimensions, weight, structural and operating features, space required, clearances, type and/or brand of finish or shop coat, grease fittings, etc. depending on the subject of the drawing. When it is customary to do so, when the dimensions are of particular importance, or when so specified, the drawings shall be certified by the manufacturer or fabricator as correct for the Contract.

C. When so specified or if considered by the ENGINEER to be acceptable, manufacturer's specifications, catalog data, descriptive matter, illustrations, etc., may be submitted in place of shop and working drawings. In such case, the requirements shall be as specified for shop and working drawings, insofar as possible, except that the submission shall be per Section 01 3300 – Submittal Procedures of these Specifications.

D. No material or equipment shall be purchased or fabricated especially for the Contract until the required shop and working drawings have been submitted as herein above provided and reviewed for conformance to the Contract requirements by the ENGINEER. All such materials and equipment and the work involved in their installation or incorporation into the Work shall then be as shown in and represented by said drawings.

E. Until the necessary review has been made, the CONTRACTOR shall not proceed with any construction portion of the Work, the design or details of work, materials, equipment, or other features for which review is required.

F. All shop and working drawings shall be prepared on standard size, 11-inch by 17-inch sheets except those, which are made by changing existing standard shop or working drawings. All drawings shall be clearly marked with the names of the Project Name,

CONTRACTOR, and building, equipment, or structure to which the drawing applies, and shall be suitably numbered.

G. The review of shop and working drawings hereunder will be general only, and nothing contained in these general conditions shall relieve, diminish, or alter in any respect the responsibilities of the CONTRACTOR under the Contract Documents and in particular, the specific responsibility of the CONTRACTOR for details and dimensions necessary for proper fitting and construction of the work as required by the Contract and for achieving the result and performance specified there under.

1.14 STANDARD SPECIFICATIONS

A. Where standard specifications, such as those of the American Society for Testing and Materials, the American National Standards Institute, the American Water Works Association, the American Association of State Highway and Transportation Officials, the Federal Aviation Agency, the Federal Specifications, etc. are referred to in the Specifications and Contract Documents and on the Drawings, said references shall be construed to mean the latest amended and/or revised versions of the said standard or tentative specification.

1.15 SPECIFIC BRANDS, MAKERS OR MANUFACTURERS

A. Wherever in the Specifications one or more specific brands, makers or manufacturers are set out and qualified by the "or equal" clause, it is intended to denote the quality standard of the article desired, but unless otherwise noted does not restrict the CONTRACTOR to the specific brand, make or manufacturer.

1.16 "OR EQUAL" CLAUSE

A. Whenever the words "or approved equal," or "or equal," or "similar to," etc., appear in the Specifications, they shall be interpreted to mean an item of material or equipment that, in the opinion of the ENGINEER is similar to that named, suited to the same use, capable of performing the same function as that named, has a record of service equal to that named, and is equal in quality, capacity and/or efficiency to that named.

B. For an “approved equal” equipment, the CONTRACTOR shall submit a Submittal Review Deposit, in the form of a certified bank check in the amount of $2,000 made payable to the OWNER. This deposit will be used for Engineer’s review of substitute equipment. The Engineer’s review time will be deducted at a rate of $l50.00 per hour for reviewing substitution requests, regardless of whether the substitution is approved or rejected. The OWNER will return any unused funds to the petitioner within 30 days of the bid date.

1.17 SAFETY

A. The CONTRACTOR shall take all necessary precautions and provide all necessary safeguards to prevent personal injury and property damage. The CONTRACTOR shall provide protection for all persons including but not limited to his employees and employees of other contractors or subcontractors; members of the public; and employees, agents, and representatives of the OWNER, and regulatory agencies that may be on or about the Work. The CONTRACTOR shall provide protection for all public and private property including but not limited to structures, pipes, and utilities, above and below the ground.

B. The CONTRACTOR shall provide and maintain all necessary safety equipment such as fences, barriers, signs, lights, walkways, guards and fire prevention and fire-fighting equipment and shall take such other action as is required to fulfill his obligations under this subsection.

C. The CONTRACTOR shall comply with all federal, state, and local laws, ordinances, rules and regulations and lawful orders of authorities having jurisdiction for the safety of persons and protection of property.

D. The CONTRACTOR shall designate a responsible member of his organization at the site whose duty shall be the prevention of accidents. This responsible person shall have the authority to take immediate action to correct unsafe or hazardous conditions and to enforce safety precautions and programs.

1.18 MATERIALS – SAMPLES – REVIEW

A. Unless otherwise expressly provided on the Drawings or in any of the other Contract Documents, only new materials and equipment shall be incorporated in the Work. All materials and equipment furnished by the CONTRACTOR to be incorporated in the Work shall be subject to the review of the ENGINEER. No material shall be processed or fabricated for the Work or delivered to the Work site without prior concurrence of the ENGINEER.

B. Facilities and labor for the storage, handling, and inspection of all materials and equipment shall be the responsibility of the CONTRACTOR. Defective materials and equipment shall be identified to the ENGINEER and removed immediately from the site of the Work.

C. If the ENGINEER so requires, either prior to or after commencement of the Work, the CONTRACTOR shall submit samples of materials for such special tests, as the ENGINEER deems necessary to demonstrate that they conform to the Specifications.

1.19 SANITARY FACILITIES

A. The CONTRACTOR shall provide adequate sanitary facilities for the use of those employed on the Work. Such facilities shall be made available when the first employees arrive on the site of the Work, shall be properly secluded from public observation, and shall be constructed and maintained during the progress of the Work in suitable numbers and at such points and in such manner as may be required.

B. The CONTRACTOR shall maintain the sanitary facilities in a satisfactory and sanitary condition at all times and shall enforce their use. He shall rigorously prohibit the committing of nuisances on the site of the Work, on the lands of the OWNER, or on adjacent property.

1.20 EMPLOYMENT QUALIFICATIONS

A. No person under the age of eighteen (18) years and no convict labor shall be employed to perform any work under this Contract. No person whose age or physical condition is such as to make his employment dangerous to his health or safety or to the health or safety of others shall be employed to perform any work under this Contract, provided that this shall not operate against the employment of physically handicapped persons, otherwise employable, where such persons may be safely assigned to work which they can ably perform. There shall be no discrimination because of race, creed, color, sex, or political affiliation in the employment of persons for work under this Contract.

1.21 WORK ON "PRIVATE PROPERTY"

A. Private property is defined as property other than that belonging to the OWNER. Highway and railroad rights-of-way, public parks, school yards and other such properties shall be considered "private properties" for the purpose of this Paragraph.

B. In connection with water line, sewer line, gas line or similar work performed on "private property," the CONTRACTOR shall confine his equipment, the storage of materials and the operations of his workman to the limits indicated on the Drawings, or to lands and rights-of-way provided for the Project by the OWNER, and shall take every precaution to avoid damage to the buildings, grounds and facilities of the OWNER or private property.

C. Fences, walls, hedges, shrubs, etc., shall be carefully removed, preserved, and replaced when the construction is completed. Grassed areas, other than lawns, shall be graded, fertilized, and seeded when construction is completed and in accordance with the requirements of the technical Specifications. Where ditches or excavations cross lawns, the sod shall be removed carefully and replaced when the backfilling has been completed. If sod is damaged or not handled properly, it shall be replaced with new sod equal to existing sod at the CONTRACTOR's expense. When construction is completed, the facilities and grounds of the OWNER's property shall be restored to as good or better condition than found as quickly as possible at the CONTRACTOR's expense.

D. When directed by the OWNER, large trees or other facilities that cannot be preserved and replaced shall be removed by the CONTRACTOR. The OWNER will assume the responsibility for settling with the property OWNER for the loss of said trees or facilities. The CONTRACTOR shall be solely and entirely responsible for any damage to all other trees or facilities.

E. Foundations, adjacent to where an excavation is to be made below the bottom of the foundation, shall be supported by shoring, bracing, or underpinning as long as the excavation shall remain open, or thereafter if required to insure the stability of the foundation and the CONTRACTOR shall be held strictly responsible for any damage to said foundations.

1.22 LANDS FOR WORK

A. The OWNER will provide the lands upon which the work under this Contract is to be done or the necessary easements over said lands to include sufficient space for the proper execution of the work, together with right of access to same. The OWNER will provide the CONTRACTOR with information, which delineates and describes the lands owned and rights-of-way acquired. The OWNER shall provide land required for storage of construction materials and for any temporary construction facilities for the storage of equipment. The CONTRACTOR will furnish his own power and water supply unless otherwise specifically set out herein or in the contract documents.

1.23 INTERFERENCE WITH AND PROTECTION OF STREETS

A. The CONTRACTOR shall not close or obstruct any portion of a street, road, or private way without obtaining permits therefore from the proper authorities. If any street, road, or private way shall be rendered unsafe by the CONTRACTOR's operations, he shall make such repairs or provide such temporary ways or guards as shall be acceptable to the proper authorities.

B. Streets, roads, private ways, and walks not closed shall be maintained passable and safe by the CONTRACTOR, who shall assume and have full responsibility for the adequacy and safety of provisions made therefore.

C. The CONTRACTOR shall, at least twenty-four (24) hours in advance, notify the Police and Fire Departments in writing, if the closure of a street or road is necessary. He shall cooperate with the Police Department in the establishment of alternate routes and shall provide adequate detour signs, plainly marked and well lighted, in order to minimize confusion.

D. All excavated materials and equipment to be incorporated in the Work shall be placed so as not to injure any part of the Work or existing facilities and so that free access can be had at all times to all parts of the Work and to all public utility installations in the vicinity of the Work. Materials and equipment shall be kept neatly piled and compactly stored in such locations as will cause a minimum of inconvenience to public travel and adjoining OWNERs, tenants, and occupants.

1.24 EXISTING UTILITIES

A. Special precautions shall be taken by the CONTRACTOR to avoid damage to existing overhead and underground utilities owned and operated by the OWNER or by public or private utility companies.

B. Before proceeding with the Work, the CONTRACTOR shall confer with all public or private companies, agencies or departments that own and operate utilities in the vicinity of the Construction Work. The purpose of the conference, or conferences, shall be to notify said companies, agencies, or departments of the proposed construction schedule, verify the location of, and possible interference with, the existing utilities that are shown on the Drawings, arrange for necessary suspension of service, and arrange to locate and avoid interference with all utilities (including house and any building connections) that are not shown on the Drawings.

C. The CONTRACTOR shall locate all unknown metallic hazards, namely buried pipe, metals, etc., by using a pipe locator. The pipe locator shall immediately precede the trench ditching and all hazards located shall be marked in such a manner as to notify the machine operator of such hazard.

D. Where existing utilities or appurtenant structures, either underground or above-ground, are encountered, they shall not be displaced or molested unless necessary, and in such case shall be replaced in as good or better condition than found as quickly as possible. Relocation and/or replacement of all utilities and appurtenant structures to accommodate the construction work shall be at cost to the OWNER, unless such relocation and/or replacement is by statute or agreement the responsibility of the CONTRACTOR.

1.25 FINAL CLEAN-UP

A. The Work will not be considered as completed until all final clean up has been done by the CONTRACTOR.

PART 2 – PRODUCTS (NOT USED)

PART 3 – EXECUTION (NOT USED)

END OF SECTION

SECTION 01 1100 – SUMMARY OF WORK

PART 1 – GENERAL

1.01 THE REQUIREMENT

A. The WORK to be performed under this Contract shall consist of furnishing parts, tools, equipment, materials, supplies and manufactured articles, and furnishing all labor, transportation, and services, including fuel, power, water, and essential communications, and performing all work or other operations required for the fulfillment of the Contract in strict accordance with the Contract Documents. The WORK shall require that all work, materials, and services not expressly indicated or called for in the Contract Documents, which may be necessary for the complete and proper construction of the WORK in good faith shall be provided.

B. The WORK will conform to the Maricopa Association of Governments (MAG) Uniform Standard Details and Specifications, as well as Yavapai County Standards. The most stringent will govern.

1.02 WORK COVERED BY CONTRACT DOCUMENTS

A. The WORK of this Contract comprises construction, installation, and/or modification of the Jerome Wastewater Treatment Plant and Sewer Main. The modifications and improvements shall include, but are not limited to the following:

1. The work shall include civil, architectural, mechanical, structural, and electrical and control work shown in the construction documents.
2. All work on this project will be coordinated with the Town's Engineering, Public Works, and the WWTP Operational staff;
3. Site grading and drainage improvements;
4. Installation of new 12-inch FPVC gravity sewer main,
5. Installation of 11 new 48-inch sewer manholes where indicated on the plans;
6. Construction of a new access roadway, including all grading and drainage work;
7. Installation of new package headworks screening equipment;
8. Installation of (2) Sequencing Batch Reactors (SBR):
    a. Construction of two new 54,000-gallon SBR basins, complete with all piping and piping appurtenances, valving, safety guard rail system, pumps and submersible mixers, and floating decanter valve;
    b. Construction of one new aerobic digester basin, complete will all equipment, pumps, piping and piping appurtenances, valving, and safety guardrail system;
    c. Construction of one new 9,075-gallon post-SBR equalization basin, complete will all equipment, flow meters, valving, piping and piping appurtenances;
    d. Installation of SBR aeration equipment, complete with all blowers, piping and piping appurtenances, valving, and instrumentation;
    e. Installation of new local SBR control panel;
9. Removal and demolition of existing wastewater equipment and components where indicated on the plans. Existing equipment shall be removed with the utmost care and returned to the Town;
10. Installation of new Sludge Dewatering Equipment, complete with piping and piping appurtenances, chemical/polymer supply equipment, air compressor, valving, controls, and instrumentation;
11. Construction of new 5,000-gallon Chlorine Contact Chamber, complete with piping and piping appurtenances, valving, gates, and instrumentation;
12. Installation of chlorination and dechlorination chemical dosing equipment, complete with piping and piping appurtenances, and instrumentation;

13. Construction of two new sludge drying beds, complete with piping and appurtenances, valving, and liner;
14. Construction of a new emergency overflow equalization basin, complete with piping and piping appurtenances, valving, and liner;
15. Installation of one new packaged overflow lift station;
16. Installation of one new drying bed and drain lift stations, complete with all mechanical, electrical, and controls and instrumentation equipment;
17. Upgrade the existing WWTP Electrical Service, and install a new power distribution panel, ATS, and Emergency Diesel Generator;
18. Construction of new WWTP Blower Building structural, mechanical, and electrical elements. Installation of new building, with architectural and mechanical/ventilation and building plumbing components;
19. Installation per Geotechnical Evaluation and Report in Appendix A of these Specifications;
20. Testing, commissioning, and startup of the new equipment and improved process areas within the plant.
21. Process Control programming and integration, shall be performed by a qualified Instrumentation and Control INTEGRATOR (I&C INTEGRATOR). The I&C INTEGRATOR shall furnish field instrumentation and controls as identified and listed in the applicable Sections of Division 40 – Process Integration. The I&C INTEGRATOR shall also be responsible for landing the wiring of these instruments at the PLC's and calibration and programming of the instrumentation. The CONTRACTOR shall be responsible for the installation of conduits, wires, and all required tags. The CONTRACTOR shall also be responsible for the installation of the instruments and landing all field wiring to the instruments.

B. The WORK includes obtaining any permits related or required by the Contract.

1.03 WORK BY OTHERS

A. Where two (2) or more Contracts are being performed at one time on the same Site or adjacent land in such manner that work under one (1) Contract may interfere with work under another, the sequence and order of the WORK in either or both Contracts to the agreement of both contracting entities shall be determined. When the Site of one (1) Contract is the necessary or convenient means of access for performance of work under another, the privilege of access or other reasonable privilege to the CONTRACTOR so desiring may be granted, to the extent, amount, and in manner and at a time that shall be determined. Conduct its operations to cause a minimum of interference with the work of such other contractors, and shall cooperate fully with such contractors to allow continued safe access to their respective portions of the Site, as required to perform work under their respective contracts.

B. Interference with Work on Utilities: Cooperate fully with all utility forces or forces of other public or private agencies engaged in the relocation, altering, or otherwise rearranging of any facilities, which interfere with the progress of the WORK, and shall schedule the WORK to minimize interference with said relocation, altering or other rearranging of facilities. Any delays, reduction in work efficiency or hardships incurred shall be identified and resolved to the satisfaction of both parties.

PART 2 – PRODUCTS (NOT USED)

PART 3 – EXECUTION (NOT USED)

END OF SECTION

SECTION 01 1400 – WORK RESTRICTIONS

PART 1 - GENERAL

1.01 LAND FOR WORK AND STORAGE

A. The OWNER will provide the lands upon which the work under this Contract is to be done or the necessary easements over said lands to include sufficient space for the proper execution of the work, together with right of access to same. The OWNER will provide the CONTRACTOR with information, which delineates and describes the lands owned and rights-of-way acquired. The OWNER shall provide land required for storage of construction materials and for any temporary construction facilities for the storage of equipment. The CONTRACTOR will furnish his own power and water supply unless otherwise specifically set out herein or in the contract documents.

B. CONTRACTOR shall designate and arrange for the use, a portion of the property adjacent to the WORK for its exclusive use during the term of the Contract as storage and shop area for its construction operations relative to this Contract.

C. Use of the Site shall be limited to its construction operations, including on-site storage of materials, on-site fabrication facilities and field offices.

D. All or part of the existing Site may be utilized during the entire period of construction for the conduct of normal operations. Cooperate and coordinate to facilitate operations and to minimize interference with the operations at the same time. In any event, access to the site during the period of construction shall be allowed.

E. All access to the site by the CONTRACTOR, Subcontractors, workmen, material/equipment suppliers, etc., shall be via approved access locations as designated by the OWNER. All vehicular or equipment activity shall be strictly confined to the construction limits as indicated by OWNER.

F. Remove all temporary construction and temporary facilities at close of the job or when no longer needed.

1.02 WORK ON "PRIVATE PROPERTY"

A. Private property is defined as property other than that belonging to the OWNER. Highway and railroad rights-of-way, public parks, school yards and other such properties shall be considered "private properties" for the purpose of this Paragraph.

B. In connection with water line, sewer line, gas line or similar work performed on "private property," the CONTRACTOR shall confine his equipment, the storage of materials and the operations of his workman to the limits indicated on the Drawings, or to lands and rights-of-way provided for the Project by the OWNER, and shall take every precaution to avoid damage to the buildings, grounds and facilities of the OWNER or private property.

C. Fences, walls, hedges, shrubs, etc., shall be carefully removed, preserved, and replaced when the construction is completed. Grassed areas, other than lawns, shall be graded, fertilized, and seeded when construction is completed and in accordance with the requirements of the Technical Specifications. Where ditches or excavations cross lawns, the sod shall be removed carefully and replaced when the backfilling has been completed. If sod is damaged or not handled properly, it shall be replaced with new sod equal to existing sod at the CONTRACTOR’s expense. When construction is completed, the facilities and grounds of the OWNER’s property shall be restored to as good or better condition than found as quickly as possible at the CONTRACTOR’s expense.

D. When directed by the OWNER, large trees or other facilities that cannot be preserved and replaced shall be removed by the CONTRACTOR. The OWNER will assume the responsibility for settling with the property OWNER for the loss of said trees or facilities. The CONTRACTOR shall be solely and entirely responsible for any damage to all other trees or facilities.

E. Foundations, adjacent to where an excavation is to be made below the bottom of the foundation, shall be supported by shoring, bracing or underpinning as long as the excavation shall remain open, or thereafter if required to insure the stability of the foundation and the CONTRACTOR shall be held strictly responsible for any damage to said foundations.

F. All excavated materials and equipment to be incorporated in the Work shall be placed so as not to injure any part of the Work or existing facilities and so that free access can be had at all times to all parts of the Work and to all public utility installations in the vicinity of the Work. Materials and equipment shall be kept neatly piled and compactly stored in such locations as will cause a minimum of inconvenience to public travel and adjoining OWNERs, tenants, and occupants.

1.03 EXISTING UTILITIES

A. Special precautions shall be taken by the CONTRACTOR to avoid damage to existing overhead and underground utilities owned and operated by the OWNER or by other public or private utility companies.

B. Before proceeding with the Work, the CONTRACTOR shall confer with all public or private companies, agencies or departments that own and operate utilities in the vicinity of the Construction Work. The purpose of the conference, or conferences, shall be to notify said companies, agencies, or departments of the proposed construction schedule, verify the location of, and possible interference with, the existing utilities that are shown on the Drawings, arrange for necessary suspension of service, and arrange to locate and avoid interference with all utilities (including house and any building connections) that are not shown on the Drawings.

C. The CONTRACTOR shall locate all unknown metallic hazards, namely buried pipe, metals, etc., by using a pipe locator. The pipe locator shall immediately precede the trench ditching and all hazards located shall be marked in such a manner as to notify the machine operator of such hazard.

D. Where existing utilities or appurtenant structures, either underground or above-ground, are encountered, they shall not be displaced or molested unless necessary, and in such case shall be replaced in as good or better condition than found as quickly as possible. Relocation and/or replacement of all utilities and appurtenant structures to accommodate the construction work shall be at cost to the OWNER, unless such relocation and/or replacement is by statute or agreement the responsibility of the CONTRACTOR.

1.04 TRAFFIC CONTROL

A. Traffic Control Plan: CONTRACTOR shall develop and a submit a Traffic Control Plan for the protection of traffic in public or private streets and ways, provide, place, and maintain all necessary barricades, traffic cones, warning signs, lights and other safety devices.

1. Traffic Control Plan shall conform to Yavapai County and ADOT requirements. Traffic control plans shall be approved by the OWNER and the governing agencies prior to construction commencement.

2. Take all necessary precautions for the protection of the WORK and the safety of the public. Barricades and obstructions shall be illuminated at night and all lights shall be kept burning from sunset until sunrise. Station guards or flaggers may be required by the public authorities within their respective jurisdictions in order to conform to such special safety regulations relating to traffic control Signs, signals and barricades shall conform to the requirements Subpart G, Part 1926, of the OSHA Safety and Health Standards for Construction.

B. HIGHWAY LIMITATIONS

Make investigation of the condition of available public and private roads and of clearances, restrictions, bridge load limits, and other limitations affecting transportation and ingress and egress to the site of the WORK.

C. TEMPORARY CROSSINGS

General: Continuous, unobstructed, safe, and adequate pedestrian and vehicular access shall be provided. Vehicular access to residential driveways shall be maintained to the property line.

D. STREET USE

Nothing herein shall be construed to entitle any entity to the exclusive use of any public street, alleyway, or parking area during the performance of the WORK hereunder, and it shall so conduct its operations as not to interfere unnecessarily with the authorized work of utility companies or other agencies in such streets, alleyways, or parking areas. No streets shall be closed to the public without first obtaining permission from the proper governmental authority. Where excavation is being performed in primary streets or highways, one lane in each direction shall be kept open to traffic at all times unless otherwise indicated. Toe boards shall be provided to retain excavated material if required by the ENGINEER or the agency having jurisdiction over the street or highway. Fire hydrants on or adjacent to the WORK shall be kept accessible to fire-fighting equipment at all times. Temporary provisions shall be made to assure the use of sidewalks and the proper functioning of all gutters, storm drain inlets and other drainage facilities. Any open trenches shall be covered with H20 traffic-rated steel trench plates during non-supervised hours.

PART 2 - PRODUCTS (NOT USED)

PART 3 - EXECUTION (NOT USED)

END OF SECTION

SECTION 01 2000 – PRICE AND PAYMENT PROCEDURES

PART 1 - GENERAL

1.01 SECTION INCLUDES

A. Requirements for preparation, format, and submittal of Schedule of Values.

B. Procedures for preparation and submittal of applications for progress payments.

C. Documentation of changes in Contract Price and Contract Time.

D. Change procedures.

E. Correlation of CONTRACTOR submittals based on changes.

F. Procedures for preparation and submittal of application for final payment.

1.02 SCHEDULE OF VALUES

A. Prepare Schedule of Values identifying costs of Major Items of Work and other costs shown in sample included at end of this Section.

B. Divide the Work into following Major Items of Work and subdivide the Major Items that will complement not only the scope of the work, but the progress of work as well.

C. Assign prices and unit price to Items of Work which aggregate the Contract Price. Separate all major items with unit prices.

D. Submit preliminary schedule of values for ENGINEER's approval.

E. Submit corrected schedule of values within 10 days upon receipt of reviewed Schedule of Values, but no later than 10 days prior to anticipated submittal of first Application for Payment.

1.03 APPLICATIONS FOR PROGRESS PAYMENTS

A. Payment Period: Submit at intervals stipulated in the Agreement.

B. Electronic media printout including equivalent information will be considered in lieu of standard form specified; submit sample to ENGINEER for approval.

C. Forms filled out by hand will not be accepted.

D. For each item, provide a column for listing each of the following:
   1. Item Number
   2. Description of work
   3. Scheduled Values
   4. Previous Applications
   5. Work in Place and Stored Materials under this Application
   6. Authorized Change Orders
   7. Total Completed and Stored to Date of Application
   8. Percentage of Completion
   9. Balance to Finish
   10. Retainage

E. Execute certification by signature of authorized officer.

F. Use data from approved Schedule of Values. Provide dollar value in each column for each line item for portion of work performed and for stored products.

G. List each authorized Change Order as a separate line item, listing Change Order number and dollar amount as for an original item of Work.

H. Submit three copies of each Application for Payment.

I. Include the following with the application:
   1. Transmittal letter as specified for Submittals in Section 01 3300 – Submittal Procedures.
   2. Construction progress schedule, revised and current as specified in these Specifications.
   3. Current construction photographs as specified in these Specifications.
   4. Partial release of liens from major Subcontractors and vendors.
   5. Sustainable design documentation applicable to work for which application is being made.
   6. Project record documents as specified in these Specifications, for review by OWNER which will be returned to the CONTRACTOR.
   7. Affidavits attesting to off-site stored products.

J. When ENGINEER requires substantiating information, submit data justifying dollar amounts in question. Provide one copy of data with cover letter for each copy of submittal. Show application number and date, and line item by number and description.

1.04 MODIFICATION PROCEDURES

A. Submit name of the individual authorized to receive change documents and who will be responsible for informing others in CONTRACTOR's employ or subcontractors of changes to the Contract Documents.

B. For minor changes not involving an adjustment to the Contract Price or Contract Time, ENGINEER will issue instructions directly to CONTRACTOR.

C. For other required changes, ENGINEER will issue a document signed by OWNER instructing CONTRACTOR to proceed with the change, for subsequent inclusion in a Change Order.
   1. The document will describe the required changes and will designate method of determining any change in Contract Price or Contract Time.
   2. Promptly execute the change.

D. For changes for which advance pricing is desired, ENGINEER will issue a document that includes a detailed description of a proposed change with supplementary or revised drawings and specifications, a change in Contract Time for executing the change with a stipulation of any overtime work required and the period of time during which the requested price will be considered valid. CONTRACTOR shall prepare and submit a fixed price quotation within 14 days of request.

E. CONTRACTOR may propose a change by submitting a request for change to ENGINEER, describing the proposed change and its full effect on the Work, with a statement describing the reason for the change, and the effect on the Contract Price and Contract Time with full documentation and a statement describing the effect on Work by separate or other contractors. Document any requested substitutions.

F. Computation of Change in Contract Amount: As specified in the Agreement and Conditions of the Contract.
   1. For change requested by ENGINEER for work falling under a fixed price contract, the amount will be based on CONTRACTOR's price quotation.
   2. For change requested by CONTRACTOR, the amount will be based on the CONTRACTOR's request for a Change Order as approved by ENGINEER.
   3. For pre-determined unit prices and quantities, the amount will be based on the fixed unit prices.

4. For change ordered by ENGINEER without a quotation from CONTRACTOR, the amount will be determined by ENGINEER based on the CONTRACTOR's substantiation of costs as specified for Time and Material work.

G. Substantiation of Costs: Provide full information required for evaluation.
   1. On request, provide following data:
      a. Quantities of products, labor, and equipment
      b. Taxes, insurance, and bonds
      c. Overhead and profit
      d. Justification for any change in Contract Time
      e. Credit for deletions from Contract, similarly documented
   2. Support each claim for additional costs with additional information:
      a. Origin and date of claim
      b. Dates and times that work was performed, and by whom
      c. Time records and wage rates paid
      d. Invoices and receipts for products, equipment, and subcontracts, similarly documented
   3. For Time and Material work, submit itemized account and supporting data after completion of change, within time limits indicated in the Conditions of the Contract.

H. Execution of Change Orders: ENGINEER will issue Change Orders for signatures of parties as provided in the Conditions of the Contract.

I. After execution of Change Order, promptly revise Schedule of Values and Application for Payment forms to record each authorized Change Order as a separate line item and adjust the Contract Price.

J. Promptly revise progress schedules to reflect any change in Contract Time, revise sub-schedules to adjust times for other items of work affected by the change, and resubmit.

K. Promptly enter changes in Project Record Documents.

1.05 APPLICATION FOR FINAL PAYMENT

A. Prepare Application for Final Payment as specified for progress payments, identifying total adjusted Contract Price, previous payments, and sum remaining due.

B. Application for Final Payment will not be considered until the following have been accomplished:
   1. All closeout procedures specified in in applicable Sections of Division 01 – General Requirements.

SCHEDULE OF VALUES (Sample Only – Modify per project needs)							
No.	**Item**	**Payment**	**Measurement**	Est. Qty	Unit	Unit $	Value
1	Mobilization/ Demobilization/Bond/ Insurance	Payment shall be made for mobilization and demobilization to and from the site, for bonds and insurance. CONTRACTOR shall provide all the necessary mobilization requirements for the proper construction activities, include providing all the necessary accommodations for personnel and equipment as describe in these Specification. Bonds and insurance requirements shall meet the requirements of the Contract Documents.	Based on Representative Opinion that the item is complete.	#	LS	$_____	$_____
2	Earthwork for Grading, cut, fill, and export	Payment shall be made for the work associated with earthworks grading, cut, fill, and export of any excess material. Fill shall include screening, placement, and compaction of native material to meet the requirements of the Contract Documents. Excess material shall be screened and exported to a dedicated site per the contract. Excess material shall be spread evenly within the dedicated site by the CONTRACTOR. Screened material greater than 4” shall be disposed by the CONTRACTOR offsite.	Measurement shall be based on a cubic yard basis of material placed or excavated as shown on the drawings, specified in the contract documents. Original delivery tickets shall be delivered to the Representative at the end of each day. The Representative will create a chronological spreadsheet of the quantities and reconcile them with the CONTRACTOR after each weekly progress meeting. Requests for payment shall only include quantities that have been reconciled.	#	CY	$_____	$_____

3	Yard Piping	Payment shall be made for site work associated with the installation of the yard piping as described in the Contract Documents. The work shall include all pipes, fitting, and associated labor and materials required for the proper trenching, installation, and backfill of the pipes. This shall also include any potholing, pavement restoration, wire tracing and surveying of the required work.	Measurement shall be made based on linear feet of pipe installed and the breakdown shown on the CONTRACTOR's schedule of values as the items are completed and accepted by the Representative.	#	LF	$_____	$_____
4	Asphalt Pavement	Payment shall be made for asphalt road pavement as described in the Contract Documents. This includes the preparation and place of the hot-mix asphalt, binder, and base course where required.	Measurement shall be based on a cubic yard basis of material placed or excavated as shown on the drawings, specified in the contract documents. Original delivery tickets shall be delivered to the Representative at the end of each day. The Representative will create a chronological spreadsheet of the quantities and reconcile them with the CONTRACTOR after each weekly progress meeting. Requests for payment shall only include quantities that have been reconciled.	#	CY	$_____	$_____
5	Package WRF	Payment shall be made for the work associated with the installation of the package WRF, and associated tank appurtenances as shown on the drawings, specified in the contract documents. This bid item is only to include items, components and equipment as supplied by the Package WRF manufacturer. All items associated with the Package WRF but not supplied by WRF	Measurement shall be made based on the breakdown shown on the CONTRACTOR's schedule of values as the items are completed and accepted by the Representative.	#	EA	$_____	$_____

		manufacturer shall be included in the Base Lump Sum Bid.					
6	Electrical and Controls	Payment shall be made for the work associated with the furnish, installation and wiring of the electrical and controls component of the project as shown on the drawings, specified in the contract documents. This includes all electrical and controls equipment and components, as well as all field instrumentation with the exception of the electrical and instrumentation to be provided by the tank manufacturer. Programming of the PLC and system controls integration shall be a separate bid item if required by the contract documents.	Measurement shall be made based on the breakdown shown on the CONTRACTOR's schedule of values as the items are completed and accepted by the Representative.	#	LS	$_____	$_____
7	Base Lump Sum	Payment shall be made for the work associated with the portion of the project not specifically included in the above bid schedule but required to be completed as part of the project as shown on the drawings, specified in the contract documents, and as required by the District. This includes all general conditions, civil, mechanical, structural, architectural, and electrical & controls work.	Measurement shall be made based on the breakdown shown on the CONTRACTOR's schedule of values as the items are completed and accepted by the Representative.	#	LS	$_____	$_____

8	**Total Lump Sum**						**$_____**
9	Alternate Bid Item 1 - Name	Payment for alternate bid items shall be based on payments for similar items listed above.	Measurement for alternate bid items shall be based on measurements for similar items listed above.				

PART 2 PRODUCTS - NOT USED

PART 3 EXECUTION - NOT USED

END OF SECTION

SECTION 01 3216 – CONSTRUCTION PROGRESS SCHEDULES

PART 1 - GENERAL

1.01 SUMMARY

A. **Section Includes**: Preparation, submittal and maintenance of computerized progress schedule and reports, contract time adjustments and payment requests, including the following:

1. Preliminary Schedule
2. Baseline Schedule
3. Schedule Updates
4. Schedule Revisions

1.02 PRECONSTRUCTION SCHEDULING MEETING

A. General: Before issuance of Notice to Proceed, a pre-construction meeting shall be held at the location, date and time designated by ENGINEER and OWNER. This meeting shall be conducted by the ENGINEER and OWNER. Attendees shall include the ENGINEER, OWNER's representatives, General CONTRACTOR's project manager and field superintendent, and representatives from each subcontractor for the project as appropriate.

B. At the meeting, scheduling requirements shall be reviewed with CONTRACTOR. These include schedule preparation, reporting requirements, updates, revisions, and schedule delay analysis. CONTRACTOR shall present their schedule methodology, planned sequence of operations, and present their proposed activity coding structure.

1.03 CONSTRUCTION PROGRESS MEETINGS AND SCHEDULES

A. Weekly Progress meetings shall be held by the CONTRACTOR. All matters bearing on progress and performance of the work since preceding progress meeting shall be discussed and resolved including, without limitation, any previously unresolved matters, deficiencies in the work or methods being employed for the work, and problems, difficulties, or delays which may be encountered. CONTRACTOR shall keep records of the meetings and distribute to all party.

B. CONTRACTOR shall submit a Baseline Construction Schedule for ENGINEER and OWNER approval 14 days after Notice to Proceed. CONTRACTOR shall maintain a progress schedule based on the approved Baseline Construction Schedule that is updated weekly and shows progress and execution of work.

PART 2 - PRODUCTS (NOT USED)

PART 3 - EXECUTION (NOT USED)

END OF SECTION

SECTION 01 3300 – SUBMITTAL PROCEDURES

PART 1 - GENERAL

1.01 WORK INCLUDED

A. Shop Drawing, Descriptive Literature, Project Data and Samples (specifically, when Samples are requested) for all manufactured or fabricated items shall be Submitted by the CONTRACTOR. CONTRACTOR shall examine and review the Submittal to ensure that the information is in the form and in the manner required by the ENGINEER. The review of the Submittal by the ENGINEER shall not be construed as a complete check or approval, but will only indicate that the general method of construction and detailing is satisfactory. Review of such Submittal will not relieve the CONTRACTOR of the responsibility for any errors, which may exist. The CONTRACTOR shall be responsible for the dimensions and design of adequate connections, details and satisfactory of all WORK.

1.02 DEFINITIONS

A. The term "Submittals" shall mean shop drawings, manufacturer's drawings, catalog sheets, brochures, descriptive literature, diagrams, schedules, calculations, material lists, performance charts, test reports, office and field samples and items of similar nature, which are normally Submitted for the ENGINEER’s review for conformance with the Design Concept and compliance with the Contract Documents.

1.03 GENERAL CONDITIONS

A. Review by the ENGINEER of shop drawings or submittals of material and equipment shall not relieve the CONTRACTOR from the responsibilities of furnishing proper dimension, size, quantity, materials, and all performance characteristics to, efficiently perform the Requirements and intent of the Contract Documents. Review shall not relieve the CONTRACTOR responsibility for errors of any kind on the shop drawings. Review is intended only to assure conformance with the design concept of the Project and compliance with the information given in the Contract Documents. Review of shop drawings shall not be construed as releasing the CONTRACTOR from the responsibility of complying with the Contract Documents.

B. Do not consider Submittals as Contract Documents. Purpose of Submittals is to demonstrate how CONTRACTOR, to conform to the design concepts.

1.04 GENERAL REQUIREMENTS FOR SUBMITTALS

A. Shop drawings shall be prepared by a qualified detailer. Details shall be identified by reference to sheet and detail numbers shown on Contract Documents. Where applicable, show fabrication, layout, setting and erection details. Shop drawings are defined as original drawings prepared by the CONTRACTOR, subcontractor, vendor, suppliers, or distributors performing WORK under this Contract. Shop drawings illustrate some portion of the WORK and show fabrication, layout, setting or erection details of equipment, materials, and components. Shop drawings shall be folded to an approximate size of 8½-inch x 11-inch and in such manner that the title block will be located in the lower right-hand corner of the exposed surface.

B. Project data shall include manufacturer's standard schematic drawings modified to delete information, which is not applicable to the Project and shall be supplemented to provide additional information applicable to the Project. Each copy of descriptive literature shall be clearly marked to identify pertinent information as it applies to the Project.

C. Where samples are required, they shall be adequate to illustrate materials, equipment, or workmanship and to establish Standards by which completed WORK is judged. Provide sufficient size and quantity to clearly illustrate functional characteristics of product and material, with integrally related parts and attachment devices, along with a full range of color samples.

D. The CONTRACTOR shall review and check Submittals, indicating his review by initials and date.

E. If the Submittals deviate from the Contract Drawings and/or Specifications, the CONTRACTOR shall clearly identify the deviation and state any reasons for the deviation. The ENGINEER may approve a change. Any costs resulting from a change will be the responsibility of the CONTRACTOR.

F. Additional information on particular items, such as special drawings, schedules, calculations, performance curves and material details, shall be provided when specifically requested by the Technical Specifications.

G. Submittals for all electrically operated items (including instrumentation and controls) shall include complete wiring diagrams showing lead, runs, number of wires, wire size, color coding, all terminations and connections and coordination with related equipment.

H. Equipment shop drawings shall indicate all factory or shop paint coatings applied by suppliers, manufacturers, and fabricators; the CONTRACTOR shall be responsible for insuring the compatibility of such coatings with the field applied paint products and systems.

I. Fastener Specifications of manufacturer shall be indicated on equipment shop drawings.

J. No material shall be fabricated or shipped unless the applicable drawings or Submittals have been reviewed and approved by the CONTRACTOR and ENGINEER.

K. All bulletins, brochures, instructions, parts lists, and warranties packaged with and accompanying materials and products delivered to and installed in the Project shall be saved and transmitted to the ENGINEER for safe keeping and preparations of the Operation &Maintenance Manuals.

L. Quantity of the Vendor's Submittals shall be as required by the CONTRACTOR. At a minimum, a Vendor shall provide one (1) electronic PDF copy to the CONTRACTOR.

1.05 SUBCONTRACTOR or VENDOR RESPONSIBILITIES

A. Verify field measurements, field construction criteria, catalog numbers and similar data.

B. Coordinate each Submittal with requirements of Work and Contract Documents.

C. Quantity of the Subcontractor or Vendor's Submittals shall be as required by the CONTRACTOR. At a minimum, one (1) electronic PDF copy shall be provided to the CONTRACTOR.

1.06 CONTRACTOR RESPONSIBILITIES

A. Submit complete listing of all required shop drawing submittals by Specification Section to the ENGINEER.

B. Submit shop drawings, product data, samples, and other pertinent information in sufficient detail to show compliance with specified requirements.

C. Check, verify, and revise Submittals as necessary to bring them into conformance with Contract Documents and actual field conditions.

1. Determine and verify quantities, dimensions, specified design and performance criteria, materials, catalog numbers and similar data.

2. Determine and verify that the equipment or product meets all aspect of the contract documents.
3. Coordinate Submittal with other Submittals and with the requirements of the Contract Documents.

D. After completion of checking, verification and revising, stamp, sign and date Submittals indicating review and approval and submit to ENGINEER.
1. Attach a copy of the corresponding specifications for the equipment or product and identify all deviations from the specifications, along with proposed corrective actions, clarifications, exemptions, etc. Submittals without accompanying specifications shall be rejected.
2. Stamp and signature indicate CONTRACTOR has satisfied shop drawing review responsibilities and constitutes written review of shop drawing with general conformance with the Contract Documents.
3. Shop drawings without CONTRACTOR written reviewed stamp and signature will be returned for resubmission.

E. **Shop Drawings:** Submit one electronic copy in PDF format. A PDF copy of the submittal will be returned with reviewer's comments.

F. **Product Data and Manufacturer's Instructions:** Submit on electronic copy in PDF format. Excise or cross out non-applicable information and clearly mark applicable information with citations to and terminology consistent with Contract Documents.
1. A PDF copy will be returned with reviewer's comments.

G. **Samples:** Submit two (2) samples labeled with reference to applicable Contract Documents. Label will be returned with reviewer's selection when appropriate, comments and stamp. Samples will not be returned unless return is requested in writing and additional samples are submitted.

H. **Special Samples:** Submit one (1) sample labeled with reference to applicable Contract Documents. Sample and one (1) label will be returned for installation in the WORK.

I. Assume risk expense and delays when proceeding with work related to required Submittals without review and acceptance.

J. **Deferred Submittals:** Submit any and all requested deferred submittals as required by the Building Permit or local governing agency. The deferred submittals may include but not be limited to trusses, bar joists, or above ground tanks.

1.07 ENGINEER'S RESPONSIBILITY

A. ENGINEER's review of shop drawings, samples or test procedures will be only for conformance with design concepts and for compliance with information given in Contract Documents.
1. ENGINEER's review does not extend to:
a. Accuracy of dimensions, quantities or performance of equipment and systems designed by CONTRACTOR, subcontractor, or Vendor.
b. CONTRACTOR or subcontractor means, methods, techniques, sequences, or procedures, except when specified, indicated on the Drawings, or required by Contract Documents.
c. Safety precautions or programs related to safety, which shall remain the sole responsibility of the CONTRACTOR and the subcontractor.

B. Except as may be provided in subsequent Specifications, a submittal will be returned within 30 days. When a Submittal cannot be returned within that period, ENGINEER will, within a reasonable time after receipt of the Submittals, give notice of the date by which that submittal will be returned.

C. For Submittals returned No Exceptions Taken – Submittal is considered in conformance with the design concept.

D. For Submittals returned Accepted with Correction Noted – Make Correction Noted/See all Comments, CONTRACTOR shall incorporate all review comments into the work, but resubmittal of an amended Submittal is not required.

E. For Submittals returned Submit Specific Item – CONTRACTOR shall develop a new Submittal package with materials, equipment, methods, etc. that meet the requirements of the Contract Documents for that specific item.

F. For Submittals returned Revised and Resubmit – Make Corrections Note/See All Comments, CONTRACTOR shall incorporate the review comments into a complete revised package and resubmit it for review.

G. For Submittals returned Rejected – See All Comments, CONTRACTOR shall develop a new Submittal package with materials, equipment, methods, etc. that meet the requirements of the Contract Documents.

H. For Submittals returned Submittal Not Reviewed, Filed for Record, no further action is required by the CONTRACTOR for this Submittal.

I. ENGINEER will be entitled to rely upon the accuracy or completeness of designs, calculations or certification made by licensed professionals accompanying a particular Submittal whether or not a stamp or seal is required by Contract Documents or Laws and Regulations.

J. Costs incurred by the ENGINEER, as a result, of additional reviews of a particular Submittal after the second time it has been reviewed shall be borne by CONTRACTOR. Reimbursement to ENGINEER will be made by issuance of a Change Order.

1.08 MINOR OR INCIDENTAL PRODUCTS AND EQUIPMENT SCHEDULES

A. Shop Drawings of minor or incidental fabricated products will not be required, unless requested.

B. Submit tabulated lists of minor or incidental products showing the names of the manufactures and catalog numbers, with Product Data and Samples, as required to, determine acceptability.

1.09 SUBMITTALS FOR INFORMATION OR RECORD ONLY

A. Submit three (3) copies of each. None will be returned.

B. **Mill Test Reports**:
   1. Submit three (3) certified copies of factory and mill test reports for record only. No copies will be returned.
   2. Do not incorporate Products in the work, which have not passed testing and inspection satisfactorily.
   3. Pay for mill and factory tests.

C. **Reinforcing Steel**:
   1. Submit reinforcing steel fabrication and setting drawings for information or record only. No copies will be returned.
   2. Note deviations and variations as specified for shop drawings.

PART 2 – PRODUCTS (Not Used)

PART 3 – EXECUTION (Not Used)

END OF SECTION

SECTION 01 3529 – HEALTH, SAFETY, AND EMERGENCY RESPONSE PROCEDURES

PART 1 - GENERAL

1.01 SUMMARY

A. Section Includes: Development and maintenance of a Construction Safety Plan.

1.02 REFERENCES

A. OSHA.

1.03 CONSTRUCTION SAFETY PLAN

A. Detail the Methods and Procedures to comply with Federal, State, and Local Health and Safety Laws, Rules and Requirements for the duration of the Contract Times. Include the following:
   1. Identification of the Certified or Licensed Safety Consultant who will prepare, initiate, maintain and supervise safety programs, and procedures.
   2. Procedures for providing workers with an awareness of safety and health hazards expected to be encountered in the course of construction.
   3. Safety equipment appropriate to the safety and health hazards expected to be encountered during construction. Include warning devices, barricades, safety equipment in public right-of-way and protected areas, and safety equipment used in multi-level structures.
   4. Methods for minimizing employees' exposure to safety and health hazards expected during construction.
   5. Procedures for reporting safety or health hazards.
   6. Procedures to follow to correct a recognized safety and health hazard.
   7. Procedures for investigation of accidents, injuries, illnesses, and unusual events that have occurred at the construction site.
   8. Periodic and scheduled inspections of general work areas and specific work stations.
   9. Training for employees and workers at the jobsite.
   10. Methods of communication of safe working conditions, work practices and required personal protection equipment.

B. Assume responsibility for every aspect of Health and Safety on the jobsite, including the health and safety of Subcontractors, suppliers, and other persons on the jobsite.
   1. Forward available information and reports to the Safety Consultant who shall make the necessary recommendations concerning worker health and safety at the jobsite.
   2. Employ additional health and safety measures specified by the Safety Consultant, as necessary, for workers in accordance with OSHA guidelines.

C. Transmit to OWNER and ENGINEER copies of reports and other documents related to accidents or injuries encountered during construction.

PART 2 - PRODUCTS (NOT USED)

PART 3 - EXECUTION (NOT USED)

END OF SECTION

SECTION 01 4219 – REFERENCE STANDARDS

PART 1 - GENERAL

1.01 GENERAL

A. Titles of Sections and Paragraphs: Titles and Subtitles accompanying Specification Sections and paragraphs are for convenience and Reference only and do not form a part of the Specifications.

B. Applicable Publications: Whenever in these Specifications References are made to Published Specifications, Codes, Standards or other Requirements, it shall be understood that wherever no date is specified, only the latest Specifications, Standards or Requirements of the respective issuing agencies, which have been published as of the date that the Contract shall apply; except to the extent that said Standards or Requirements may be in conflict with applicable Laws, Ordinances or Governing Codes. No Requirements set forth in the Specifications or shown on the Drawings will be waived because of any provision of, or omission from, said Standards or Requirements.

C. Specialists, Assignments: In certain instances, Specification text requires (or implies) that specific WORK is to be assigned to specialists or expert entities, who must be engaged for the performance of that WORK. Such assignments shall be recognized as Special Requirements. These Requirements shall not be interpreted so as to conflict with the enforcement of Building Codes and similar Regulations Governing the WORK; also, they are not intended to interfere with Local Union Jurisdiction Settlements and similar conventions. Such assignments are intended to establish which party or entity involved in a specific unit of work is recognized as "Expert" for the indicated construction processes or operations. Nevertheless, the final responsibility for fulfillment of the entire set of Contract Requirements remains.

1.02 REFERENCE SPECIFICATIONS, CODES AND STANDARDS

A. Construct the WORK in accordance with the Contract Documents and the referenced portions of those Referenced Codes, Standards and Specifications.

B. Verify the following references agree with the plans and local requirements. All references listed are to the most recently approved and published edition.

References herein to "Building Code" shall mean International Building Code (IBC). Similarly, references to "Mechanical Code" or "International Mechanical Code," "Plumbing Code" or "Uniform Plumbing Code," "Fire Code" or "International Fire Code," shall mean International Mechanical Code (IMC), Uniform Plumbing Code (UPC) and International Fire Code (IFC). "Electric Code" or "National Electric Code (NEC)" shall mean the National Electric Code of the National Fire Protection Association (NFPA). The latest edition of the codes as approved by the Municipal Code and used by the local agency as of the date that the WORK is advertised for bids, as adopted by the agency having jurisdiction, shall apply to the WORK herein, including all Addenda, Modifications, Amendments, or other Lawful changes thereto.

C. In case of conflict between Codes, Reference Standards, Drawings, and the other Contract Documents, the most stringent Requirements shall govern. All conflicts shall be brought to the attention of the ENGINEER for clarification and directions prior to ordering or providing any materials or furnishing labor through the RFI process. The most stringent Requirements may be bid on.

D. All equipment and materials used on this project shall comply with the standards set forth in the American Iron and Steel Institute (AISI).

E. References herein to "OSHA Regulations for Construction" shall mean Title 29, Part 1926, Construction Safety and Health Regulations, Code of Federal Regulations (OSHA), including all changes and amendments thereto.

F. References herein to "OSHA Standards" shall mean Title 29, Part 1910, Occupational Safety and Health Standards (OSHA), Code of Federal Regulations, including all changes and Amendments thereto.

G. Applicable Standard Specifications: References in the Contract Documents to "Standard Specifications" or SSPWC shall mean the Standard Specifications for Public Works Construction.

1.03 REGULATIONS RELATED TO HAZARDOUS MATERIALS

A. Responsibility for all work included in the Contract Documents, regardless if shown or not, shall comply with all EPA, OSHA, RCRA, NFPA, and any other Federal, State, and Local Regulations governing the storage and conveyance of hazardous materials, including petroleum products.

PART 2 - PRODUCTS (NOT USED)

PART 3 - EXECUTION (NOT USED)

END OF SECTION

SECTION 01 4333 – MANUFACTURER'S FIELD SERVICES

PART 1 - GENERAL

1.01 THE REQUIREMENT

A. General: Provide a qualified service representative from each equipment company manufacturing or supplying equipment to perform the duties herein described and as required by the various Sections of the Specifications. All costs to perform these services shall be included in the supplier's proposal in accordance with the scope of work.

B. Supervision of Installation: The supplier shall provide direct and/or indirect supervision of the workers and ENGINEER, in accordance with the scope of work, to ensure that proper procedures are followed during equipment installation.

1.01 EQUIPMENT CHECK OUT:

A. After installation of the equipment has been completed and the equipment is presumably ready for operation but before it is operated by others, the representative shall inspect, operate, test, and adjust the equipment. The inspection shall include but shall not be limited to, the following points as applicable:

1. Soundness (without cracked or otherwise damaged parts)
2. Completeness in all details as specified
3. Correctness of setting, alignment, and relative arrangement of various parts
4. Adequacy and correctness of packing, sealing and lubricants
5. Completeness in electrical and controls
6. The operation, testing and adjustment shall be as required to prove that the equipment has been installed properly and is capable of satisfactory operation under the conditions specified. On completion of his WORK, the CONTRACTOR, manufacturer, or supplier's representatives shall submit a complete signed report of the result of his inspection, operation, adjustments, and tests. The report shall include descriptions of the points inspected, tests and adjustments made, quantitative results obtained if such are specified and suggestions for precautions to be taken to ensure proper maintenance. The report also shall include a certificate that the equipment conforms to the requirements of the Contract Documents and is ready for permanent operation and that nothing in the installation will render the manufacturer's warranty null and void.

B. Field Tests: As required by the individual Specification Sections, the manufacturer's representative shall be present when the field tests are made.

C. Operator Training: As required by the individual Specification Sections, the manufacturer's representative shall provide hands-on training to maintenance personnel in the proper operation and maintenance of the equipment prior to placing the equipment in full operation.

D. Post-startup Services: As required by the individual Specification Sections, the manufacturer's representative shall provide services beyond the startup of the equipment. Services may include assistance in the calibration, tuning and troubleshooting, plus any additional training, which may be required during the agreed time after the equipment, is accepted.

E. The CONTRACTOR shall be the supplier for items not specifically included in the supplier's scope of work.

PART 2 - PRODUCTS (NOT USED)

PART 3 - EXECUTION

3.01 EXECUTION

A. The CONTRACTOR shall submit one (1) electronic copy and two (2) hard copies of all equipment field service certification documents and certificates of warranty to the ENGINEER in accordance with applicable Sections of these Specifications and Contract Documents.

END OF SECTION

SECTION 01 4500 – QUALITY CONTROL

PART 1 - GENERAL

1.01 THE REQUIREMENT

A. The Specific Quality Control Requirements for the WORK are indicated throughout the Contract Documents. The Requirements of this Section are primarily related to performance of the WORK beyond furnishing of manufactured products. The term "Quality Control" includes pre-activity inspection, follow up meetings, sampling and testing, and associated requirements.

B. All materials to be incorporated into the work shall be subject to sampling, testing, and approval as required by specifications.

1.02 INSPECTION AT PLACE OF MANUFACTURE

A. Unless otherwise indicated, all products, materials, and equipment shall be subject to inspection by the ENGINEER at the place of manufacture.

B. Unless noted otherwise, the presence of the ENGINEER at the place of manufacturer is not required; however, this shall not relieve responsibility for providing products, materials and equipment that comply with all requirements of the Contract Documents.

1.03 SAMPLING AND TESTING

A. Unless otherwise specified, samples and tests shall be made in accordance with either: the Standard Methods of AASHTO, ASTM, and/or ASME, which were in effect and published at the time of advertising for bids. The laboratory responsible for the test(s) shall furnish at least one copy of the test results to the CONTRACTOR, the ENGINEER, and to the appropriate material supplier.

1.04 INSPECTION AND TESTING SERVICE

A. Independent inspection and testing laboratory service shall comply with the following:
   1. Unless noted otherwise by the Specifications, an independent firm shall be appointed and employed by the CONTRACTOR to perform inspection and testing, including soils and concrete testing.
   2. Perform inspections, testing, and other services as required.
   3. Submit Reports of Testing to the ENGINEER, CONTRACTOR and OWNER if required in duplicate, indicating observations and results of tests, and indicating compliance or non-compliance with Contract Documents.
   4. CONTRACTOR to notify 48 hours prior to the expected time for operations requiring inspection and laboratory testing services is required.
   5. The same independent firm on instructions shall perform retesting required because of non-conformance to requirements.
   6. For tests and samples required, arrangements shall be made with an independent firm for payment and scheduling of testing. Responsibility shall be taken for the cost of sampling and testing.
   7. Provide an overall report on inspection and test results for project closeout.
   8. All materials and/or equipment not conforming to the requirements of the Specifications, whether in place or not, will be rejected. Rejected materials and/or equipment shall be removed immediately from the site of work unless otherwise permitted by the ENGINEER. No rejected material and/or equipment, the defects of which have been subsequently corrected, shall be used until approved in writing by the ENGINEER. CONTRACTOR shall be responsible for re-testing of all rejected materials.

1.05 SPECIAL INSPECTION

A. Various categories for special inspection/ observation of work progress during the course of construction are listed, but not limited to specifications and notes in the drawings. The OWNER requires on-site observation of the work at these various stages prior to covering the work. A list of such special inspections will be reviewed at the Pre-Construction Conference and subsequent job meetings, and it is understood that the CONTRACTOR will not cover work until such observation has been completed. The OWNER and OWNER representatives will be responsible for reasonable cooperation with CONTRACTOR requests for observation of the work. The CONTRACTOR shall include anticipated observation requests at weekly update of scheduled activities.

PART 2 - PRODUCTS (NOT USED)

PART 3 - EXECUTION

3.01 INSTALLATION

A. Inspection: Inspect materials or equipment upon arrival on the job site, prior to installation and reject damaged and defective items.

B. Measurements: Verify measurements and dimensions of the WORK, as an integral step of starting each installation.

C. Manufacturer's Instructions: Where installations include manufactured products, compliance with manufacturer's applicable instructions and recommendations for installation, to whatever extent these are more explicit or more stringent than applicable requirements indicated in Contract Documents is required.

END OF SECTION

SECTION 01 5626 – TEMPORARY FENCING

PART 1 - GENERAL

1.01 SUMMARY

A. Contractor shall determine temporary fence type, layout, and location of gates. Construction and maintenance of temporary fencing shall be provided by the contractor.

B. In general, the overall site of the existing Wastewater Facility is already fenced. Sections of which will have to be removed and replaced as dictated by the sequence of construction. It will be the Contractor's responsibility to determine their needs to secure the yard/staging areas as well as any and all construction sites or activities within the project. It is the OWNER'S opinion that the plastic mesh fence will be sufficient to provide safety and security surrounding the work activities; however, it is the contractor's responsibility to make the final determination. The OWNER will not be responsible in any manner for any missing, stolen, or damaged to any and all contractor property, yard, equipment, or construction activity, this is the contractor's responsibility.

1.02 SUBMITTALS

A. Submit in accordance with Section 01 3300 – Submittal Procedures.
   1. Shop drawing indicating layout of temporary fencing, location and size of gates, existing pavement and roads, access to fire hydrants and hose connections, and other site-specific conditions. Prepare drawing after site observation and verification of existing conditions.

PART 2 - PRODUCTS

2.01 TEMPORARY CHAIN LINK FENCING

A. Unless otherwise indicated, type of temporary chain link fencing shall be Contractor's option. Following types are acceptable:
   1. New Materials or previously used salvage chain link fencing in good condition.
   2. Posts: Galvanized steel pipe of diameter to provide rigidity. Post shall be suitable for setting in concrete footings, driving into ground, anchoring with base plates, or inserting in precast concrete blocks.
   3. Fabric: Woven galvanized steel wire mesh. Provide in continuous lengths to be wire tied to fence posts or prefabricated into modular pipe-framed fence panels.

B. Gates: Provide personnel and vehicle gates of the quantity and size required for functional access to site.
   1. Fabricate of same material as used for fencing
   2. Vehicle gates:
      a. Minimum width: 20 feet to allow access for emergency vehicles
      b. Capable of manual operation by one person.

2.02 PLASTIC MESH FENCING

A. Where required to provide visual warning and control, provide plastic mesh fencing supported by steel posts driven into ground or set in precast concrete blocks

B. Height: 36 inches minimum

C. Color: Safety orange

PART 3 - EXECUTION

3.01 LAYOUT

A. Access: Provide gates for personnel, delivery of materials, and access by emergency vehicles.

3.02 INSTALLATION

A. Plastic mesh fencing: Space steel support posts to ensure mesh remains vertical and at proper height. Securely tie mesh to posts.

3.03 MAINTENANCE AND REMOVAL

A. Maintain fencing in good condition. If damaged, immediately repair.

B. Remove temporary fencing upon completion of Work or when no longer required for security or control. Backfill holes and compact. Holes in pavement shall be surfaced to match existing paving. Repair damage caused by installation of temporary fencing.

END OF SECTION

SECTION 01 5713 – TEMPORARY EROSION AND SEDIMENT CONTROL

PART 1 - GENERAL

1.01 SECTION INCLUDES

A. Prevention of erosion due to construction activities.

B. Prevention of sedimentation of waterways, open drainage ways, and storm and sanitary sewers due to construction activities.

C. Restoration of areas eroded due to insufficient preventive measures.

1.02 REFERENCE STANDARDS: Most recently approved and published editions of:

A. ASTM D4355 - Deterioration of Geotextiles by Exposure to Light, Moisture, and Heat in a Xenon Arc Type Apparatus.

B. ASTM D4491 - Water Permeability of Geotextiles by Permittivity.

C. ASTM D4533 - Trapezoid Tearing Strength of Geotextiles

D. ASTM D4632 - Grab Breaking Load and Elongation of Geotextiles.

E. ASTM D4751 - Determining Apparent Opening Size of a Geotextile.

F. ASTM D4873 - Identification, Storage, and Handling of Geosynthetic Rolls and Samples.

G. EPA (NPDES) - National Pollutant Discharge Elimination System (NPDES), Construction General Permit.

H. FHWA FLP-94-005 - Best Management Practices for Erosion and Sediment Control; Federal Highway Administration.

I. USDA TR-55 - Urban Hydrology for Small Watersheds; USDA Natural Resources Conservation Service.

1.03 PERFORMANCE REQUIREMENTS

1.04 Perform all work and take all measures necessary to control soil erosion resulting from construction operations to prevent the flow of sediment from the site, to contain construction materials (including excavation and backfill), and to stabilize soil banks from erosion caused by stormwater flood zones so as to prevent damage to the adjacent water courses and to the project site.

A. Do not employ any construction method that violates a rule, regulation, guideline, or procedure established by Federal, State, or local agencies having jurisdiction over the environmental effects of construction.

B. Pollutants such as chemicals, fuels, lubricants, bitumen, raw sewage, and other harmful waste shall not be discharged into or alongside of any body of water or into natural or man-made channels leading thereto.

C. Prepare and submit a Stormwater Pollution Prevention Plan (SWPPP) to the ENGINEER for his records in accordance with ADEQ and with the plans as provided with in the Construction Documents. The CONTRACTOR is responsible for all aspects of this plan, its monitoring, maintaining of the reports and keeping a copy of documents on site as required by ADEQ.

D. Prepare and submit a monitoring program and reporting plan to the ENGINEER for his records in accordance with ADEQ. Submit to the ENGINEER for his records on a monthly basis copies of the monitoring reports taken throughout the month.

E. Prepare and submit the Notice of Intent (NOI) as required by ADEQ. Submit Copy of NOI to the ENGINEER for his records.

F. Comply with all requirements of U.S. Environmental Protection Agency for erosion and sedimentation control, as specified for the National Pollutant Discharge Elimination System (NPDES), Phases I and II, under requirements for the Construction General Permit (CGP), whether the project is required by law to comply or not.

G. Timing: Put preventive measures in place as soon as possible after disturbance of surface cover and before precipitation occurs.

H. Storm Water Runoff: Control increased storm water runoff due to disturbance of surface cover due to construction activities for this project.
   1. Prevent runoff into storm and sanitary sewer systems, including open drainage channels, in excess of actual capacity or amount allowed by authorities having jurisdiction, whichever is less.
   2. Anticipate runoff volume due to the most extreme short term and 24-hour rainfall events that might occur in 25 years.

I. Erosion on Site: Minimize wind, water, and vehicular erosion of soil on project site due to construction activities for this project.
   1. Control movement of sediment and soil from temporary stockpiles of soil.
   2. Prevent development of ruts due to equipment and vehicular traffic.
   3. If erosion occurs due to non-compliance with these requirements, restore eroded areas at no cost to Owner.

J. Erosion Off Site: Prevent erosion of soil and deposition of sediment on other properties caused by water leaving the project site due to construction activities for this project.
   1. Prevent windblown soil from leaving the project site.
   2. Prevent tracking of mud onto public roads outside site.
   3. Prevent mud and sediment from flowing onto sidewalks and pavements.
   4. If erosion occurs due to non-compliance with these requirements, restore eroded areas at no cost to Owner.

K. Sedimentation of Waterways On Site: Prevent sedimentation of waterways on the project site, including rivers, streams, lakes, ponds, open drainage ways, storm sewers, and sanitary sewers.
   1. If sedimentation occurs, install or correct preventive measures immediately at no cost to Owner; remove deposited sediments; comply with requirements of authorities having jurisdiction.
   2. If sediment basins are used as temporary preventive measures, pump dry and remove deposited sediment after each storm.

L. Sedimentation of Waterways Off Site: Prevent sedimentation of waterways off the project site, including rivers, streams, lakes, ponds, open drainage ways, storm sewers, and sanitary sewers.
   1. If sedimentation occurs, install or correct preventive measures immediately at no cost to Owner; remove deposited sediments; comply with requirements of authorities having jurisdiction.

M. Open Water: Prevent standing water that could become stagnant.

N. Maintenance: Maintain temporary preventive measures until permanent measures have been established.

1.05 SUBMITTALS

A. See Section 01 3300 – Submittal Procedures.

B. Stormwater Prevention Plan:
   1. Submit not less than 30 days prior to anticipated start of clearing, grading, or other work involving disturbance of ground surface cover.
   2. Include:
      a. Site plan identifying soils and vegetation, existing erosion problems, and areas vulnerable to erosion due to topography, soils, vegetation, or drainage.
      b. Site plan identifying soils and vegetation, existing erosion problems, and areas vulnerable to erosion due to topography, soils, vegetation, or drainage.
      c. Site plan showing grading; new improvements; temporary roads, traffic accesses, and other temporary construction; and proposed preventive measures.
      d. Where extensive areas of soil will be disturbed, include storm water flow and volume calculations, soil loss predictions, and proposed preventive measures.
      e. Schedule of temporary preventive measures, in relation to ground disturbing activities.
      f. Other information required by law.
      g. Format required by law is acceptable, provided any additional information specified is also included.
      h. Obtain the approval of the Plan by authorities having jurisdiction.
      i. Obtain the approval of the Plan by Owner.

C. Certificate: Mill certificate for silt fence fabric attesting that fabric and factory seams comply with specified requirements, signed by legally authorized official of manufacturer; indicate actual minimum average roll values; identify fabric by roll identification numbers.

D. Inspection Reports: Submit report of each inspection; identify each preventive measure, indicate condition, and specify maintenance or repair required and accomplished.

E. Maintenance Instructions: Provide instructions covering inspection and maintenance for temporary measures that must remain after Substantial Completion.

PART 2 - PRODUCTS

2.01 MATERIALS

A. Mulch: Use one of the following:
   1. Straw or hay
   2. Wood waste, chips, or bark
   3. Erosion control matting or netting
   4. Cutback asphalt
   5. Polyethylene film, where specifically indicated only

B. Grass Seed for Temporary Cover: Select a species appropriate to climate, planting season, and intended purpose. If same area will later be planted with permanent vegetation, do not use species known to be excessively competitive or prone to volunteer in subsequent seasons.

C. Bales: Air dry, rectangular straw bales.
   1. Cross Section: 14 by 18 inches, minimum.
   2. Bindings: Wire or string, around long dimension.

D. Bale Stakes: One of the following, minimum 3 feet long:
   1. Steel U- or T-section, with minimum mass of 1.33 lb. per linear foot.
   2. Wood, 2 by 2 inches in cross section.

E. Silt Fence Fabric: Polypropylene geotextile resistant to common soil chemicals, mildew, and insects; non-biodegradable; in longest lengths possible; fabric including seams with the following minimum average roll lengths:
   1. Average Opening Size: 30 U.S. Std. Sieve, maximum, when tested in accordance with ASTM D4751.
   2. Permittivity: 0.05 sec^-1, minimum, when tested in accordance with ASTM D4491.
   3. Ultraviolet Resistance: Retaining at least 70 percent of tensile strength, when tested in accordance with ASTM D4355 after 500 hours exposure.
   4. Tensile Strength: 100 lb-f, minimum, in cross-machine direction; 124 lb-f, minimum, in machine direction; when tested in accordance with ASTM D4632.
   5. Elongation: 15 to 30 percent, when tested in accordance with ASTM D4632.
   6. Tear Strength: 55 lb-f, minimum, when tested in accordance with ASTM D4533.
   7. Color: Manufacturer's standard, with embedment and fastener lines preprinted.
   8. Manufacturers:
      a. TenCate: www.tencate.com.
      b. North American Green: www.nagreen.com.
      c. Propex Geosynthetics: www.geotextile.com

F. Silt Fence Posts: One of the following, minimum 5 feet long:
   1. Steel U- or T-section, with minimum mass of 1.33 lb per linear foot.
   2. Softwood, 4 by 4 inches in cross section.
   3. Hardwood, 2 by 2 inches in cross section.
   4. Bank stabilization shall be durable UV resistant high performance turf reinforcement mats (HP TRMs). Tensile strength of 4000 lb/ft meets US EPA definition of a high performance TRM. Acceptable products are Pyramat or ENGINEER-approved equal.

PART 3 - EXECUTION

3.01 EXAMINATION

A. Examine site and identify existing features that contribute to erosion resistance; maintain such existing features to greatest extent possible.

3.02 PREPARATION

A. Schedule work so that soil surfaces are left exposed for the minimum amount of time.

3.03 SCOPE OF PREVENTIVE MEASURES

A. In all cases, if permanent erosion resistant measures have been installed temporary preventive measures are not required.

B. Construction Entrances: Traffic-bearing aggregate surface.
   1. Width: As required; 20 feet, minimum.
   2. Length: 50 feet, minimum.
   3. Provide at each construction entrance from public right-of-way.
   4. Where necessary to prevent tracking of mud onto right-of-way, provide wheel washing area out of direct traffic lane, with drain into sediment trap or basin.

C. Linear Sediment Barriers: Made of silt fences.
   1. Provide linear sediment barriers:
      a. Along downhill perimeter edge of disturbed areas, including soil stockpiles.
      b. Along the top of the slope or top bank of drainage channels and swales that traverse disturbed areas.
      c. Along the toe of cut slopes and fill slopes.

d. Perpendicular to flow across the bottom of existing and new drainage channels and swales that traverse disturbed areas or carry runoff from disturbed areas; space at maximum of 200 feet apart.
e. Across the entrances to culverts that receive runoff from disturbed areas.
f. Space sediment barriers with the following maximum slope length upslope from barrier:
1) Slope of Less Than 2 Percent: 100 feet.
2) Slope Between 2 and 5 Percent: 75 feet.
3) Slope Between 5 and 10 Percent: 50 feet.
4) Slope Between 10 and 20 Percent: 25 feet.
5) Slope Over 20 Percent: 15 feet.

D. Storm Drain Curb Inlet Sediment Trap: Protect each curb inlet using one of the following measures:
1. Filter fabric wrapped around hollow concrete blocks blocking entire inlet face area; use one piece of fabric wrapped at least 1-1/2 times around concrete blocks and secured to prevent dislodging; orient cores of blocks so runoff passes into inlet.
2. Straw bale row blocking entire inlet face area; anchor into pavement.

E. Storm Drain Drop Inlet Sediment Traps: As detailed on drawings.

F. Temporary Splash Pads: Stone aggregate over filter fabric; size to suit application; provide at downspout outlets and storm water outlets.

G. Soil Stockpiles: Protect using one of the following measures:
1. Cover with polyethylene film, secured by placing soil on outer edges.
2. Cover with mulch at least 4 inches thickness of pine needles, sawdust, bark, wood chips, or shredded leaves, or 6 inches of straw or hay.

H. Mulching: Use only for areas that may be subjected to erosion for less than 6 months.
1. Wood Waste: Use only on slopes 3:1 or flatter; no anchoring required.
2. Asphalt: Use only where no traffic, either vehicular or pedestrian, is anticipated.

I. Temporary Seeding: Use where temporary vegetated cover is required.

3.04 INSTALLATION

A. Traffic-Bearing Aggregate Surface:
1. Excavate minimum of 6 inches.
2. Place geotextile fabric full width and length, with minimum 12 inch overlap at joints.
3. Place and compact at least 6 inches of 1.5 to 3.5 inch diameter stone.

B. Silt Fences:
1. Store and handle fabric in accordance with ASTM D4873.
2. Where slope gradient is less than 3:1 or barriers will be in place less than 6 months, use nominal 16 inch high barriers with minimum 36 inch long posts spaced at 6 feet maximum, with fabric embedded at least 4 inches in ground.
3. Where slope gradient is steeper than 3:1 or barriers will be in place over 6 months, use nominal 28 inch high barriers, minimum 48 inch long posts spaced at 6 feet maximum, with fabric embedded at least 6 inches in ground.
4. Where slope gradient is steeper than 3:1 and vertical height of slope between barriers is more than 20 feet, use nominal 32 inch high barriers with woven wire reinforcement and steel posts spaced at 4 feet maximum, with fabric embedded at least 6 inches in ground.
5. Install with top of fabric at nominal height and embedment as specified.
6. Embed bottom of fabric in a trench on the upslope side of fence, with 2 inches of fabric laid flat on bottom of trench facing upslope; backfill trench and compact.

7. Do not splice fabric width; minimize splices in fabric length; splice at post only, overlapping at least 18 inches, with extra post.
8. Fasten fabric to wood posts using one of the following:
    a. Four ¾-inch diameter, 1 inch long, 14-gauge nails.
    b. Five 17-gauge staples with 3/4 inch wide crown and ½-inch legs.
    c. Fasten fabric to steel posts using wire, nylon cord, or integral pockets.
    d. Wherever runoff will flow around end of barrier or over the top, provide temporary splash pad or other outlet protection; at such outlets in the run of the barrier, make barrier not more than 12 inches high with post spacing not more than 4 feet.

C. Straw Bale Rows:
1. Install bales in continuous rows with ends butting tightly, with one bale at each end of row turned uphill.
2. Install bales so that bindings are not in contact with the ground.
3. Embed bales at least 4 inches in the ground.
4. Anchor bales with at least two stakes per bale, driven at least 18 inches into the ground; drive first stake in each bale toward the previously placed bale to force bales together.
5. Fill gaps between ends of bales with loose straw wedged tightly.
6. Place soil excavated for trench against bales on the upslope side of the row, compacted.

D. Mulching Over Large Areas:
1. Dry Straw and Hay: Apply 2-1/2 tons per acre; anchor using dull disc harrow or emulsified asphalt applied using same spraying machine at 100 gallons of water per ton of mulch.
2. Wood Waste: Apply 6 to 9 tons per acre.
3. Asphalt: Apply at 1,200 gallons per acre.
4. Erosion Control Matting: Comply with manufacturer's instructions.

E. Mulching Over Small and Medium Areas:
1. Dry Straw and Hay: Apply 4 to 6 inches depth.
2. Wood Waste: Apply 2 to 3inches depth.
3. Pine Needles: Apply 2 to 3 inches depth.
4. Asphalt: Apply 1/4 gallon per square yard.
5. Erosion Control Matting: Comply with manufacturer's instructions.

F. Temporary Seeding:
1. When hydraulic seeder is used, seedbed preparation is not required.
2. When surface soil has been sealed by rainfall or consists of smooth undisturbed cut slopes, and conventional or manual seeding is to be used, prepare seedbed by scarifying sufficiently to allow seed to lodge and germinate.
3. If temporary mulching was used on planting area but not removed, apply nitrogen fertilizer at 1 pound per 1,000 sq. ft.
4. On soils of very low fertility, apply 10-10-10 fertilizer at rate of 12 to 16 pounds per 1,000 sq. ft.
5. Incorporate fertilizer into soil before seeding.
6. Apply seed uniformly; if using drill or cultipacker seeders place seed ½- to 1 inch deep.
7. Irrigate as required to thoroughly wet soil to depth that will ensure germination, without causing runoff or erosion.
8. Repeat irrigation as required until grass is established.

3.05 MAINTENANCE

A. Inspect preventive measures weekly, within 24 hours after the end of any storm that produces 0.5 inches or more rainfall at the project site, and daily during prolonged rainfall.

B. Repair deficiencies immediately.

C. Silt Fences:
   1. Promptly replace fabric that deteriorates unless need for fence has passed.
   2. Remove silt deposits that exceed one-third of the height of the fence.
   3. Repair fences that are undercut by runoff or otherwise damaged, whether by runoff or other causes.

D. Straw Bale Rows:
   1. Promptly replace bales that fall apart or otherwise deteriorate unless need has passed.
   2. Remove silt deposits that exceed one-half of the height of the bales.
   3. Repair bale rows that are undercut by runoff or otherwise damaged, whether by runoff or other causes.

E. Clean out temporary sediment control structures weekly and relocate soil on site.

F. Place sediment in appropriate locations on site; do not remove from site.

3.06 CLEAN UP

A. Remove temporary measures after permanent measures have been installed, unless permitted to remain by Engineer.

B. Clean out temporary sediment control structures that are to remain as permanent measures.

C. Where removal of temporary measures would leave exposed soil, shape surface to an acceptable grade and finish to match adjacent ground surfaces.

END OF SECTION

SECTION 01 5719 –TEMPORARY ENVIRONMENTAL CONTROLS

PART 1 - GENERAL

1.01 EXPLOSIVES AND BLASTING

A. The use of explosives on the WORK will not be permitted.

1.02 RUBBISH CONTROL

A. During the progress of the WORK, the CONTRACTOR shall keep the Site and other areas used by it in a neat and clean condition, and free from any accumulation of rubbish. Dispose of all rubbish and waste materials of any nature occurring at the Site, and shall establish regular intervals of collection and disposal of such materials and waste. Keep its haul roads free from dirt, rubbish and unnecessary obstructions resulting from its operations. Disposal of all rubbish and surplus materials shall be off the Site in accordance with local codes and ordinances governing locations and methods of disposal, and in conformance with all applicable safety laws, and to the particular requirements of Part 1926 of the OSHA Safety and Health Standards for Construction.

1.03 SANITATION

A. The CONTRACTOR shall provide adequate sanitary facilities for the use of those employed on the WORK. Such facilities shall be made available when the first employees arrive on the site of the WORK, shall be properly secluded from public observation, and shall be constructed and maintained during the progress of the Work in suitable numbers and at such points and in such manner as may be required.

B. The CONTRACTOR shall maintain the sanitary facilities in a satisfactory and sanitary condition at all times and shall enforce their use. He shall rigorously prohibit the committing of nuisances on the site of the WORK, on the lands of the OWNER, or on adjacent property.

C. Toilet Facilities: The CONTRACTOR shall provide fixed or portable chemical toilets wherever needed for the use of employees. Toilets at construction job sites shall conform to the requirements of Part 1926 of the OSHA Standards for Construction.

D. Sanitary and Other Organic Wastes: The CONTRACTOR shall establish a regular daily collection of all sanitary and organic wastes. All wastes and refuse from sanitary facilities provided or organic material wastes from any other source related to operations shall be disposed of away from the Site in accordance with all laws and regulations pertaining thereto.

1.04 CHEMICALS

A. All chemicals used or furnished by the CONTRACTOR for or during project construction, whether defoliant, soil sterilant, herbicide, pesticide, disinfectant, polymer, reactant or of other classification, shall show approval of either the U.S. Environmental Protection Agency or the U.S. Department of Agriculture. Use of all such chemicals and disposal of residues shall be in strict accordance with the printed instructions of the manufacturer.

1.05 CULTURAL RESOURCES

A. Attention is directed to the National Historic Preservation Act of 1966 (16 U.S.C. 470) and 36 CFR 800, which provides for the preservation of potential historical architectural, archaeological, or cultural resources (hereinafter called "cultural resources").

B. Conform to the applicable requirements of the National Historic Preservation Act of 1966 as it relates to the preservation of cultural resources.

C. In the event potential cultural resources are discovered during subsurface excavations at the site of construction, the following procedures shall be instituted:
   1. The CONTRACTOR shall issue a Field Order directive to cease all construction operations at the location of such potential cultural resources find.
   2. Such Field Order shall be effective until such time as a qualified archaeologist can be called to assess the value of these potential cultural resources and make recommendations to the State Historic Preservation Office.

D. If the archaeologist determines that the potential find is a bona fide cultural resource, at the direction of the State Historic Preservation Office, WORK shall be suspended at the location of the find under the provisions for changes contained in the Contractual Agreement.

PART 2 - PRODUCTS (NOT USED)

PART 3 - EXECUTION (NOT USED)

END OF SECTION

SECTION 01 5726 – SITE WATERING FOR DUST CONTROL

PART 1– GENERAL

1.01 DUST ABATEMENT

A. Preventative measures to limit the production of dust in amounts damaging to property, cultivated vegetation or domestic animals, or causing a nuisance to persons living in or occupying buildings in the vicinity shall be taken in to account. Responsibility for any damage resulting from dust originating from its operations shall be the CONTRACTOR's. The dust abatement measures shall be maintained at all times during construction of the project, in accordance with the requirements of jurisdictional agency.

PART 2 – PRODUCTS (NOT USED)

PART 3 – EXECUTION

3.01 GENERAL

A. The CONTRACTOR shall take necessary measures to control any and all dust related to or as a result of construction activities under this Contract. The CONTRACTOR shall be responsible for obtaining a Dust Control Permit as required by the jurisdictional agency.

B. The water necessary for the dust control operation will be Owner-furnished; beyond that, the CONTRACTOR shall be responsible for providing whatever means necessary to accomplish the task of Dust Control. The CONTRACTOR shall be responsible for any damage resulting from dust originating from construction activities under this Contract.

END OF SECTION

SECTION 01 7113 – MOBILIZATION

PART 1 - GENERAL

1.01 THE REQUIREMENT

A. Mobilization shall include verification by the CONTRACTOR that all permits have been obtained; moving onto the site of all plant and equipment; furnishing and erecting plants, temporary buildings, and other construction facilities; and implementing security requirements; all as required for the proper performance and completion of the WORK. Mobilization shall include the following principal items:

1. Moving onto the site all materials and equipment required for first month operations
2. Installing temporary construction power, wiring and lighting facilities if applicable
3. Establishing a fire protection system as required.
4. Developing a construction water supply as required.
5. Providing field office trailers, complete with all specified furnishings and utility services (if available) including telephones, telephone appurtenances and copying machine
6. Providing all on-site communication facilities including telephones
7. Providing on-site sanitary facilities and potable water facilities
8. Arranging for and erection of work and storage yard
9. Obtaining all required permits for the project.
10. Comply with all OSHA required notices and establish a safety program
11. Having the superintendent or authorized representatives at the job site as required for execution of the work
12. Provide and implement an on-site Dust Control Plan.
13. Upon start of construction, the CONTRACTOR shall furnish and install a Project Identification Sign. The sign shall be painted by a professional experienced in sign painting. The paint used shall resist weathering and fading for the scheduled construction project duration. Two 4”X4”X8’ supports shall be supplied by the CONTRACTOR. The project identification sign shall be securely bolted to the supports and shall be installed and located as directed by the OWNER. The CONTRACTOR shall repair the sign structure and supports as necessary for the duration of the project. The sign and supports shall be maintained in a neat and clean condition. The CONTRACTOR shall remove and properly dispose of the sign upon completion of the project. Costs associated with supplying, erecting, and maintaining the project identification sign shall be considered incidental to the contract and no separate payment will be allowed.

PART 2 - PRODUCTS (NOT USED)

PART 3 - EXECUTION (NOT USED)

END OF SECTION

SECTION 01 7123 – FIELD ENGINEERING

PART 1 - GENERAL

1.01 SUMMARY

A. Section Includes: Field engineering to establish lines and grades for the WORK.

1.02 THE REQUIREMENT

A. The CONTRACTOR shall provide the surveying and staking control for the project. In addition, the CONTRACTOR shall provide the staking of the property and easement limits, clearing limits, influent and effluent lines, utilities, and excavation limits staking of structure corners with offsets as necessary for construction.

B. The CONTRACTOR shall provide all necessary staking following the OWNER initial staking as completed during the design of this project, as required to construct all items included in the plans and Scope of Work.

C. The CONTRACTOR shall survey the location of any underground utility line that the CONTRACTOR installs prior to backfilling. This shall include all joints, valves, structure, hydrants and services.

1.03 QUALITY ASSURANCE

A. Qualifications of Surveyor or Engineer: Registered civil engineer or land surveyor in state where Project is located.

B. Accuracy of stakes, alignments, and grades may be checked randomly by ENGINEER.
   1. Notice of when checking will be conducted will be given.
   2. When notice of checking is given, postpone parts of the Work affected by stakes, alignments or grades to be checked until checked.
   3. Do not assume that ENGINEER's check substitutes or complements required field quality control procedures.

1.04 CONSTRUCTION STAKES, LINES, AND GRADES

A. Execute the Work in accordance with the lines and grades indicated.

B. Make distances and measurements on horizontal planes, except elevations and structural dimensions.

1.05 SURVEY REFERENCE POINTS

A. Basic reference line, a beginning point on basic reference line, and a bench mark will be provided, by OWNER as defined in the Contract.

B. From these reference points, establish other control and reference points as required to properly lay out the Work.

C. Locate and protect control points prior to starting sitework, and preserve permanent reference points during construction.
   1. Make no changes or relocations without prior written notice.
   2. Replace Project control point, when lost or destroyed, in accordance with original survey control.

D. Set monuments for principal control points and protect them from being disturbed and displaced.
   1. Re-establish disturbed monuments.
   2. When disturbed, postpone parts of the Work that are governed by disturbed monuments until such monuments are re-established.

1.06 PROJECT SURVEY REQUIREMENTS

A. Establish minimum of 2 permanent bench marks on site referenced to data established by survey control points.

B. Record permanent bench mark locations with horizontal and vertical data on Project Record Documents.

C. Assume responsibility for accuracy of stakes, alignments, and grades by performing verifications and checking in accordance with standard surveying practice.

D. Locate all utilities installed within the project prior to backfilling. Make a complete survey at the line, hub, or joint locations.

1.07 RECORD DOCUMENTS

A. Once the CONTRACTOR has reached substantial completion the CONTRACTOR will survey the site in preparation of Record Documents in conjunction with the CONTRACTORS supplied as-built as specified in the applicable Sections of Division 01 – General Requirements.

B. Carefully note all deviations or changes from the original drawings and maintain complete, accurate log of control points and survey.

C. Submit all utility locate information and surveyed information in hard copy and AutoCAD format.

D. Affix civil engineer's or land surveyor's signature and registration number to Record Drawing to certify accuracy of information shown.

PART 2 - PRODUCTS (NOT USED)

PART 3 - EXECUTION

3.01 GENERAL

A. The CONTRACTOR shall provide the initial surveying and staking control for the project. In addition, the CONTRACTOR shall provide the initial staking of the property and easement limits, clearing limits, influent and effluent lines, utilities, and excavation limits staking of structure corners with offsets as necessary for construction.

B. The CONTRACTOR shall provide all required field survey as necessary to complete the work as defined in the contract.

END OF SECTION

SECTION 01 7700 – CLOSEOUT PROCEDURES

PART 1 - GENERAL

1.01 SUBSTANTIAL COMPLETION

A. Substantial completion is based on the guideline established in the Contract Documents.

B. CONTRACTOR shall submit written certification that the project construction phase is entering the substantial completion phase.

C. CONTRACTOR to submit all applicable certification and test results, including but not limited to:
   1. Hydrostatic Test for Concrete Structures
   2. Pipe line pressure tests
   3. Geotechnical test
   4. Concrete Tests
   5. Equipment Field Service Installation, Certification, Certificate of Warranty, and Evidence of Training per applicable sections of Division 01 – General Requirements
   6. Certifications of all special inspections
   7. Clean water testing
   8. Electrical testing and inspection certification
   9. Equipment and process instrumentation program testing and certification
   10. And any applicable test required by the contract documents

D. Submit list of items to be completed or corrected but will not impact substantial completion.

E. Engineer will inspect within seven days after receipt of certification, together with a representative.

F. Should ENGINEER consider that work is substantially complete:
   1. Prepare and submit to ENGINEER a list of the items to be completed or corrected, as determined by on-site observation.
   2. Engineer will prepare and issue a Certificate of Substantial Completion, containing:
      a. Date of Substantial Completion.
      b. List of items to be completed or corrected, verified, and amended.
      c. The time required to complete or correct work of listed items.
      d. Responsibilities for:
         1) Insurance
         2) Utilities
         3) Operation of mechanical, electrical, and other systems
         4) Maintenance and cleaning
         5) Security
      e. Signatures of: ENGINEER
   3. Complete work listed for completion or correction, within designated time.

E. Should ENGINEER consider that work is not substantially complete:
   1. He shall immediately notify, in writing, stating reasons.
   2. Complete work, and send second written notice to ENGINEER, certifying that Project, or designated portion of project of substantially complete.
   3. ENGINEER will re-review work.

1.02 FINAL INSPECTION

A. Submit written certification that:
   1. Contract Documents have been reviewed.

2. Project has been inspected for compliance with Contract Documents.
3. Work has been completed in accordance with Contract Documents.
4. Equipment and systems have been tested in presence of ENGINEER and are operational.
5. Project is completed and ready for final inspection from jurisdictional agency(ies).

B. ENGINEER will make final on-site observation/review within seven (7) days after receipt of certification.

C. Should ENGINEER consider that work is finally complete in accordance with requirements of Contract Documents, he shall prepare and issue the following:
1. Certificate of Completion;
2. A Request to make Project Closeout submittals.

D. Should ENGINEER consider that work is not finally complete:
1. He shall notify, in writing, stating reasons.
2. Take immediate steps to remedy the stated deficiencies, and send second written notice to ENGINEER certifying that work is complete.
3. ENGINEER will re-review the work.

1.03 CLOSEOUT SUBMITTALS

A. Submit the following Closeout Submittals upon completion of the Work and at least 7 days prior to submitting Application for Final Payment:
1. Evidence of Compliance and Closeout from Jurisdictional Agency(ies)
2. Project Record Documents (As-built Drawings and Documentation)
3. Operation and Maintenance Manuals
4. Warranties and Bonds
5. Keys and Keying Schedule
6. Evidence of Payment and Release of Liens as outlined in Conditions of the Contract
7. Release of claims as outlined in the Conditions of the Contract
8. Certificate of Final Completion

1.04 EVIDENCE OF COMPLIANCE WITH REQUIREMENTS OF GOVERNING AUTHORITIES

A. Submit the following:
1. Authorization of Construction (by OWNER)
2. APP Permit (by OWNER)
3. 4.01 Permit (by OWNER)
4. Certificate of Occupancy:
    1) Yavapai County
5. Certificate of Inspection:
    a. Mechanical:
        1) Town of Jerome.
    b. Electrical:
        1) Town of Jerome.

1.05 PROJECT RECORD DOCUMENTS

A. Deliver record documents with the transmittal letter containing date, Project title, list of documents, and signature of the CONTRACTOR.

1.06 WARRANTIES AND BONDS

A. Provide executed Warranty or Guaranty Form if required by Contract Documents.

B. Provide specified additional warranties, guarantees, and bonds form manufacturers and suppliers.

1.07 FINAL CLEANING UP

A. The work will not be considered as completed and final payment made until all final cleanup has been done in a satisfactory manner. Contractor shall obtain clean up verification from Owner. Reference applicable sections of Division 01 – General Requirements.

1.08 CERTIFICATE OF FINAL COMPLETION

A. When operational test has been successfully completed, ENGINEER will certify that new facilities are operationally complete. ENGINEER will submit a list of known items (punch list) still to be completed or corrected prior to contract completion.

B. List of items to be completed or corrected will be amended as items are resolved by Contractor.

C. When all items have been completed or corrected, submit written certification that the entire work is complete in accordance with the Contract Documents and request final inspection.

D. Final Clean up verification letter from Owner.

E. Upon completion of final inspection, ENGINEER will either prepare a written acceptance of the entire work or advise the Contractor of work not complete. If necessary, inspection procedures will be repeated.

1.09 FINAL APPLICATION FOR PAYMENT

A. Submit final applications in accordance with the requirements of the Contractual Agreement.

1.10 FINAL CERTIFICATE FOR PAYMENT

A. ENGINEER will issue final certificate in accordance with provisions of Contractual Agreement.

PART 2 - PRODUCTS (NOT USED)

PART 3 - EXECUTION (NOT USED)

END OF SECTION

SECTION 01 7823 – OPERATION AND MAINTENANCE DATA

PART 1 - GENERAL

1.01 THE REQUIREMENT

A. Compile product data and related information appropriate for maintenance and operation of equipment furnished under the Contract. Prepare Operating and Maintenance Manual as specified.

B. Instruct OWNER's personnel in the maintenance and operation of equipment and systems as outlined herein.

C. In addition to Operating and Maintenance Data, the Manufacturer's printed recommended Installation Practice shall be included. If not part of the Operating and Maintenance Manual, separate written installation instructions shall be provided, serving to assist the CONTRACTOR in equipment installation.

1.02 OPERATING AND MAINTENANCE MANUAL

A. Every piece of equipment furnished and installed shall be provided with complete maintenance and operations manuals, unless noted otherwise. These shall be detailed in instructions to the OWNER's personnel. After approval, the CONTRACTOR shall store all manuals until the completion of the project or until requested by the ENGINEER. The manuals will be stored and delivered to the OWNER in an organized format.

B. Provide two hard copies and one (1) electronic version in PDF format. The hard copy shall be delivered to the jobsite shipped with the equipment and one (1) copies shall be delivered to the CONTRACTOR's main office. The PDF copy shall be electronically delivered to the OWNER, the ENGINEER, and the CONTRACTOR.

1.03 SUBMITTALS

A. Submittals shall be made in accordance with Section 01 3300 – Submittal Procedures.

1.04 CONTENT OF MANUAL

A. Neatly typewritten table of contents for each volume, arranged in systematic order.
   1. CONTRACTOR, name of responsible principal, address and telephone number.
   2. A list of each product required to be included, indexed to the content of the volume.
   3. List, with each product, the name, address and telephone number of:
      a. Subcontractor or installer.
      b. Maintenance contractor, as appropriate.
      c. Identify the area of responsibility of each.
      d. Local source of supply for parts and replacement.
   4. Identify each product, by product name and other identifying symbols as set forth in Contract Documents.

B. Product Data:
   1. Include only those sheets, which are pertinent to the specific product. References to other sizes and types or models of similar equipment shall be deleted or lined out.
   2. Annotate each sheet to:
      a. Clearly identify the specific product or part installed.
      b. Clearly identify the data applicable to the installation.
      c. Provide a parts list for all new equipment items, with catalog numbers and other data necessary for ordering replacement parts.
      d. Delete references to inapplicable information.

3. Clear and concise instructions for the operation, adjustment, lubrication, and other maintenance of the equipment including a lubrication chart and maintenance schedule or frequency.

C. Drawings:
   1. Supplement product data with drawings as necessary to clearly illustrate:
      a. Relations of component parts of equipment and systems.
      b. Control and flow diagrams.
   2. Coordinate drawings with information in Project Record Documents to assure correct illustration of complete installation.

D. Written text, as required to supplement product data for the particular installation:
   1. Organize in a consistent format under separate headings for different procedures.
   2. Provide a logical sequence of instructions for each procedure.

E. Copy of each warranty, bond and service contract issued: Provide information sheet for OWNER's personnel.
   1. Proper procedures in the event of failure.
   2. Instances which might affect the validity of warranties or bonds.

F. The manuals must be approved by the OWNER before final payment on the equipment is made.

PART 2 - PRODUCTS (NOT USED)

PART 3 - EXECUTION (NOT USED)

END OF SECTION

SECTION 01 7839 – PROJECT RECORD DOCUMENTS

PART 1 - GENERAL

1.01 RECORD DRAWINGS

A. The CONTRACTOR and its Subcontractors at the start of the project shall provide a clean set of Drawings and mark on them, in large writing “As Built.” This set of drawings will be kept at the job site trailer and used to indicate with a red pencil, pen or marker the “As Built” conditions of the project. These drawings will be updated as the work progresses to reflect the “As Built” conditions.

B. The CONTRACTOR shall be responsible to ensure that the “As Built” drawings are being kept up to date.

C. Upon substantial completion the CONTRACTOR shall obtain all “As Built” drawings and review them for accuracy and completeness, this includes surveying of utilities as required by these Specifications and Contract Documents. After the CONTRACTOR has reviewed and confirmed accuracy and completeness of the “As Built” drawings the CONTRACTOR shall submit the drawings and survey information to the ENGINEER of record.

1. All survey as-built information shall be submitted to the ENGINEER in AutoCAD format.

D. Upon receipt of the “As Built” drawings the ENGINEER shall make all necessary changes to the documents and provide a Record Drawing set to the CONTRACTOR for their use and distribution as required for project closeout, as required by these Specifications and Contract Documents.

1.02 PHOTO DOCUMENTATION

A. Images must be created using only digital photographic equipment. Camera should be capable of utilizing a moderate wide-angle lens system and have electronic flash capable of properly illuminating a large interior space. Digital images shall be saved in JPEG format and properly labeled.

B. Digital copies shall be provided for OWNER and ENGINEER by CONTRACTOR at each weekly progress meeting.

C. Saved images shall include detailed photograph description along with month, day, and year and separated by treatment process.

PART 2 - PRODUCTS (NOT USED)

PART 3 - EXECUTION (NOT USED)

END OF SECTION

SECTION 01 7900 – DEMONSTRATION AND TRAINING

PART 1 - GENERAL

1.01 THE REQUIREMENT

A. Description of Work:

1. The SBR SYSTEM EQUIPMENT VENDOR shall provide formal training of OWNER's personnel. Training shall commence after the successful completion of the Seeding Process
   a. Training of OWNER's personnel shall commence within a period of 14 days after the equipment installation and startup as mutually agreed to by OWNER, ENGINEER, and CONTRACTOR.
   b. Training shall be conducted for first shift during normal working hours.
   c. Training shall be completed within the time allocated in the Agreement.
   d. The Engineer shall document the time when the facilities are substantially unavailable for use by the SBR SYSTEM VENDOR to perform training due to circumstances beyond the control of the SBR SYSTEM VENDOR including but not limited to power outages, lack of feed water, inability to transfer product water or feed water due to factors beyond the control of the SBR SYSTEM VENDOR, not having adequate staff from the CONTRACTOR or the OWNER. If in the sole opinion of the ENGINEER the facilities are substantially unavailable to the SBR SYSTEM VENDOR, equivalent additional time for training will be granted.
   e. Failure of the SBR SYSTEM VENDOR to complete the Training as required by this Section within the allocated time, shall constitute a failure of the SBR SYSTEM VENDOR to provide Special Services in accordance with the requirements of the Contract.
   f. Upon successful completion of the Training required by this Section, the OWNER will issue a "Notice of Completed Training".
   g. The SBR SYSTEM VENDOR shall maintain record of the individuals that have completed training and provide information required for the documentation of Professional Development Hours required for the OWNER's personnel.
2. The SBR SYSTEM VENDOR shall provide the services of factory-trained specialists to train the OWNER's personnel in the recommended operation and the preventive maintenance procedures for all equipment provided by the Contract Documents.
3. The SBR SYSTEM VENDOR shall provide a combination of classroom and hands-on training.
4. The following Levels of Training shall be provided.

Level of Training	Number of Shifts	Maximum Number of Participants	Classroom Training (Hours)	Hands-on Training (Hours)
SBR System	1	4	8	16
Mechanical Equipment	1	4	8	16
Instrumentation and Control Equipment	1	4	8	16
PLC / HMI	1	4	16	16

5. Hands-On Training shall be limited to groups of 4. In the event that more than 4 personnel are to be trained, multiple hands-on training sessions shall be conducted.
6. The SBR SYSTEM VENDOR shall be responsible for all costs associated with training and shall provide required materials, texts, and supplies.
7. Training shall be conducted in normal eight (8) hour working days until conclusion of the training course.
8. Training sessions may be videotaped by the OWNER at the OWNER's expense.
9. Training material shall be provided to the OWNER in written and electronic format.
10. Training shall be performed by the SBR SYSTEM VENDOR and component equipment suppliers. The SBR SYSTEM VENDOR shall be responsible for the training on the design and operation of the equipment and systems provided. This includes, but not limited to:
11. Sequencing Batch Reactor System:
    a. SBR Theory
    b. SBR System
    c. SBR Processes:
        1) Start Up, Shut Down
        2) SBR Treatment Cycle (fill, aerate, anoxic mix, settle, decant)
    d. Routine and Non-Routine Maintenance
12. Component Equipment Training:
    a. Equipment: Equipment (including pumps, compressors, crane)
    b. Mechanical: Equipment (valves, actuators, blowers, and positioners)
13. Instrumentation and Control Programmable Logic Control/HMI Training:
    a. Programmable Logic Control Equipment
    b. HMI System Training

B. Coordination:
1. The SBR SYSTEM VENDOR shall coordinate these services at times acceptable to the OWNER, with a minimum of 5 days' prior notice.

1.02 QUALITY ASSURANCE/QUALITY CONTROL (QA/QC)

A. The qualifications of specialists shall meet the requirements of this Section and are subject to approval by the ENGINEER.

1.03 SUBMITTALS

A. Training Manuals shall be provided with the PRELIMINARY O&M Manuals. Refer to SBR System RFP for Installation, Operation and Maintenance Manuals requirements.

B. The SBR SYSTEM VENDOR shall develop a Training Manual and submit it to the ENGINEER and the OWNER. The Training Manual shall include the elements presented in this Section or as required by the SBR SYSTEM VENDOR or component equipment supplier.

C. The SBR SYSTEM VENDOR shall prepare a Training Lesson Plan, provide qualified instructors, and schedule the training in an organized manner.
1. Proposed lesson plans for scheduled instruction shall be submitted 15 days prior to the commencement of training. Lesson plans shall be approved by the ENGINEER a minimum of 5 days prior to scheduled instruction. All training material shall be provided to the OWNER in electronic format.

2. Credentials for the SBR SYSTEM VENDOR'S designated instructor(s) shall be submitted thirty (30) days prior to the commencement of training. Credentials shall include a brief resume and specific details of the instructor(s) pertaining both to personal experience operating and maintaining the specified equipment and conducting operation and maintenance for the same equipment.
3. The SBR SYSTEM VENDOR'S proposed lesson plans shall detail specific instruction topics. Training aids to be utilized in the instruction shall be referenced and attached where applicable to the proposed lesson plan. "Hands-on" demonstrations planned for the instruction shall be described in the lesson plan.
4. The SBR SYSTEM VENDOR shall indicate the estimated duration of each segment of the training in the lesson plan.
5. Submit information as required by the local primacy agency in support of Professional Development Hours

1.04 SPECIAL PROJECT CONSIDERATIONS

A. Training Aids:
   1. The SBR SYSTEM VENDOR's instructor shall incorporate training aids as appropriate to assist in the instruction. As a minimum, the training aids shall include text and figure handouts. Texts shall be bound within three-ring binders. Other appropriate training aids are:
      a. Audio-visual aids (e.g., films, slides, videotapes, overhead transparencies, posters, blueprints, diagrams, catalogue sheets).
      b. Equipment cutaways and samples (e.g., spare parts and damaged equipment).
      c. Tools (e.g., repair tools, customized tools, measuring and calibrating instruments).

B. The SBR SYSTEM VENDOR's instructor shall utilize descriptive class handouts during the instruction. Photocopied class handouts shall be good quality reproductions. Class handouts should accompany the instruction with frequent reference made to them. Customized handouts developed especially for the instruction are required. Handouts planned for the instruction shall be attached with the manufacturer's proposed lesson plan.

C. Hands-on Demonstration:
   2. The SBR SYSTEM VENDOR's instructor shall present Hands-on demonstrations of operations and maintenance of the SBR SYSTEM VENDOR supplied and component equipment. The proposed Hands-on demonstrations should be described in the SBR SYSTEM VENDOR's proposed lesson plan.

PART 2 – PRODUCTS (NOT USED)

PART 3 – EXECUTION

3.01 OPERATOR TRAINING

A. Training: The instruction lesson plan shall include the following as a minimum:
   1. Equipment Operation:
      a. Describe equipment's operating (process) function. Describe equipment's fundamental operating principals and dynamics.
      b. Identify equipment's mechanical, electrical, and electronic components and features.
      c. Identify all support equipment associated with the operation of subject equipment (e.g., valve actuators, motors).
      d. Recommend standard operating procedures to address start-up, routine monitoring, and shutdown of the equipment.

SECTION 02 0100 – MAINTENANCE OF EXISTING CONDITIONS

PART 1 - GENERAL

1.01 THE REQUIREMENT

A. The WORK of this Section, as defined in the Contract, includes all work necessary to satisfactorily prepare the site as shown on the accepted drawings and as specified herein. Following this preparation, the site shall be in such a condition as to easily continue with the next operation whether it be excavating, backfilling, or any other operations that are a part of the project. Site preparation includes clearing, grubbing, grading, tree and shrub removal, native grass stripping and removing and disposing of all debris within the limits of the project and such other areas as may be indicated on the plans or required work, except such objects as are designated to remain or are to be removed in accordance with the plans. This work shall also include the preservation from injury or defacement of all vegetation and objects designated to remain.

B. Related Sections: The work shall conform to these Specifications and the Contract Documents.

C. Soils Report: This work shall conform to the requirements of the latest Geotechnical Evaluation.

1.02 SUBMITTALS

A. Submittals shall be made in accordance with Section 01 3300 – Submittal Procedures.

B. Shop Drawings: Submit clearing limits, staging, and site access plans and limits.

1.03 SITE SURVEY AND LAYOUT

A. The CONTRACTOR shall establish construction, and clearing limits by providing the initial site survey and field staking. The initial staking will include property line limits, casements and access points and structure locations with 100-ft. offsets. The OWNER shall provide the contractor the survey data for the project to include the survey control points, hubs, etc., and benchmarks for the site. The contractor shall layout required construction staking as defined in these Specifications and the Contract Documents.

1.04 PERMITS

A. Verify all required permits have been secured for this work. Comply with applicable local Air Pollution Control requirements. In the absence of specific ordinances, periodic watering shall be done to control dust throughout the work. Make all necessary arrangements for water required for this work.

PART 2 - PRODUCTS (NOT USED)

PART 3 - EXECUTION

3.01 PRIMARY SITE ACCESS

A. The CONTRACTOR shall provide clearing, grubbing, and stripping as defined in the contract.

B. The CONTRACTOR shall develop any necessary access to the Site, including access entrance barriers to prohibit entry of unauthorized persons as defined in the Contract. The contractor shall provide at the project site access barriers to prohibit entry of unauthorized persons as defined in the Contract.

C. Adequately support existing structures, sidewalks, slabs, pavements, utilities, and other facilities that may be affected by the proposed construction as defined in the Contract.

D. Utility Interference: Where existing utilities interfere with the WORK, notify the utility owner before proceeding in accordance with the General Conditions.

3.02 CLEARING, GRUBBING AND STRIPPING

A. The CONTRACTOR shall perform this work as defined in the Geotechnical Evaluation and or Soils Report.

B. Construction areas shall be cleared of grass and weeds to at least a depth of 1 inch and cleared of structures, pavement, sidewalks, concrete or masonry debris, trees, logs, upturned stumps, loose boulders, and any other objectionable material of any kind which would interfere with the performance or completion of the WORK, create a hazard to safety, or impair the subsequent usefulness of the WORK, or obstruct its operation. Trees and other natural vegetation outside the actual lines of construction shall be protected from damage during construction.

C. Within the limits of clearing, the areas below the natural ground surface shall be grubbed to a depth necessary to remove all stumps, roots, buried logs and all other objectionable material. Septic tanks, drain fields, and connection lines and any other underground structures, debris or waste shall be removed if found on the Site. All objectionable material from the clearing and grubbing process shall be removed from the Site and wasted in approved safe locations.

3.03 OVEREXCAVATION, REGRADING AND BACKFILL UNDER FILL AREAS

A. All grading and excavation shall conform to the requirements of the Geotechnical Evaluation and or Soils Report.

3.04 EXISTING UTILITY SERVICES

A. At start of work, CONTRACTOR shall locate and identify all utility services within the construction limits (both underground and overhead). Utilize Blue Stake services and private location underground utilities locating services as required, including potholing if necessary.

B. CONTRACTOR shall disconnect or reroute all existing services, where such services will be affected by construction operations. Comply with all instructions issued during the pre-construction conference regarding coordination, advance notice, emergency repairs, etc.

C. All DISCONNECTIONS OR TERMINATIONS SHALL BE PERFORMED IN SAFE MANNER, IN ACCORDANCE WITH APPLICABLE CODES AND REGULATIONS. PROVIDE ANY DISCONNECTS SWITCHES, VALVES, PLUGS, TEES, ETC., AS REQUIRED FOR THE VARIOUS LOCATIONS.

END OF SECTION

SECTION 02 4000 – DEMOLITION AND STRUCTURE MOVING

PART 1 - GENERAL

1.01 REQUIREMENT

A. Items required to be removed:
   1. Reference plans for existing items to be removed. Removable items may include, but are not limited to concrete paving, asphaltic concrete pavement, base courses, manholes, and pipes.

1.02 REGULATORY REQUIREMENTS

A. Conform to applicable codes for disposal of debris.

B. Coordinate removal work with utility companies or appropriate party.

PART 2 – PRODUCTS – NOT USED

PART 3 – EXECUTION

3.01 PREPARATION

A. Obtain advance approval from ENGINEER for dimensions and limits of removal work.

B. Identify known utilities below grade. Stake and flag locations.

3.02 PROTECTION

A. Protect following from damage or displacement:
   1. Adjacent public and private property.
   2. Trees, plants, and other landscape features designated to remain.
   3. Utilities designated to remain.
   4. Pavement and utility structures designated to remain.
   5. Bench marks, monuments, and existing structures designated to remain.

3.03 REMOVALS

A. Remove pavements and structures by methods that will not damage underground utilities. Do not use drop hammer near existing underground utilities.

B. Minimize amount of earth loaded during removal operations.

C. Where existing pavement is to remain, make straight saw cuts in existing pavement to provide clean breaks prior to removal. Do not break concrete pavement or base with drop hammer unless concrete or base has been saw cut to minimum depth of 2 inches.

D. When street and driveway saw cut location is greater than one-half of pavement lane width, remove pavement for full lane width or to nearest longitudinal joint as directed by ENGINEER.

E. Remove sidewalks and curbs to nearest existing dummy, expansion, or construction joint.

F. Unless noted otherwise or indicated in the Contract Documents, existing ends of pipe culverts or end of sewers which are to remain, shall have an 8-inch-thick masonry plug in pipe installed in the end of the pipe prior to backfill, with the backfill constructed in accordance with requirements of these Specifications.

3.04 BACKFILL

A. Backfill of removal areas shall be in accordance with requirements of these Specifications.

3.05 DISPOSAL

A. Inlet frames, grates, and plates; and manhole frames and covers, may remain City property. Disposal shall be in accordance with requirements these Specifications.

B. Remove from site, debris resulting from work under this section in accordance with requirements of these Specifications.

END OF SECTION

SECTION 02 9600 – TEMPORARY BYPASS PIPING SYSTEMS

PART 1 – GENERAL

1.01 THE REQUIREMENT

A. Section includes requirements for implementing a temporary bypass piping for the purpose of diverting existing sewage flow around the Work area during construction.

1.02 QUALITY ASSURANCE

A. Follow national standards and as specified herein.

B. Perform leakage and pressure tests on piping using clean water before operation. Notify Project Manager 24 hours prior to testing.

C. Keep and maintain spare parts for piping on site, as required.

1.03 SUBMITTALS

A. Submittals shall be made in accordance with Section 01 33 00 – Submittal Procedures.

1. Detailed plan and description of proposed temporary bypass piping system. Bypass piping plan shall be stamped and certified by an Arizona registered civil engineer. Plans shall indicate the following:

a. Size, material, location, and method of installation of bypass piping;

b. Size and location of manhole for discharge piping;

c. Temporary pipe supports and anchoring required;

d. Thrust and restraint block sizes and locations, if required;

e. Sewer plugging method and type of plugs;

f. Calculations of friction losses, and flow velocity;

g. Schedule of installation and maintenance of bypass piping lines;

h. Procedures to monitor upstream mains for backup impacts;

i. Procedures for installation and removal of piping system;

j. Emergency plan detailing procedures in the event of sewer overflows, service backups, and sewage spillage. A copy of the emergency plan shall be maintained on site for the duration of construction.

1.04 CONTRACTOR'S RESPONSIBILITY FOR OVERFLOWS AND SPILLS

A. It is the responsibility of the Contractor to schedule and perform work in a manner that does not cause overflows, releases, or spills of sewage from sanitary sewers or bypass piping system.

PART 2 – PRODUCTS

2.01 MATERIALS

A. High-Density Polyethylene Pipe (HDPE):

1. All piping shall be homogenous throughout, free of visible cracks, discoloration, pitting, varying wall thickness, holes, foreign material, blisters, or other deleterious faults.

2. Piping shall be assembled and joined at site using couplings, flanges, or butt-fusion method to provide leak proof joints. Follow manufacturer's instructions and ASTM D-2657. Threaded joints or connections are not permitted.

3. Fusing shall be performed by personnel certified as fusion technicians by the manufacturer.

4. Butt-fused joints shall be of true alignment and uniform roll-back beads resulting from use of proper temperature and pressure.

   a. Adequate cooling time shall be allowed before removal of pressure.

   b. Joint shall be watertight and have tensile strength equal to that of the pipe after fusion.

   c. Joint shall be accepted by Project Manager prior to installation.

B. Coupling and connectors shall be:

1. Abrasion resistant;

2. Suitable for intended service;

3. Rated for external and internal loads anticipated.

C. Valves and Fittings shall be selected and sized according to flow calculations and operating pressures.

D. Plugs shall be selected and installed according to size of the service line to be plugged, pipe and manhole configuration, and site-specific requirements. Additional plugs shall be retained on site in the event of plug failure. Plugs shall be inspected for defects before use.

E. Discharge hose shall not be permitted, except in short sections where approved in writing by the Engineer.

F. Anchoring systems shall be provided to ensure pipeline does not sag or deflect.

2.02 DESIGN REQUIREMENT

A. The bypass piping system shall be designed with sufficient capacity to convey the peak flow of 0.27 MGD.

B. The system shall be designed to operate for 24 hours a day.

C. Pipeline valves, fittings, and connections shall be of adequate size to accommodate peak flow and shall ensure total flow can be safely diverted around construction areas.

PART 3– EXECUTION

3.01 PREPARATION

A. Bypass pipelines shall be located such that there is minimal disturbance to existing utilities. Existing utilities shall be field located by the Contractor in accordance with the contract documents. Bypass pipeline locations shall be approved by the Engineer upon submittal of the temporary bypass system design plans as specified above in Part 1.

3.02 INSTALLATION AND REMOVAL

A. Bypass piping system shall be connected to the existing sewer system(s) where indicated on the Drawings.

B. Plugging or blocking of sewage flows shall incorporate a primary and secondary plugging device. When plugging or blocking is no longer required for performance and acceptance of work, remove in such a manner that permits sewage flow to slowly return to normal without surge. Surcharging or other major downstream disturbances shall be avoided.

END OF SECTION

2. Detailed Component Description:
    a. Identify and describe in detail each component's function.
    b. Group related components into subsystems, where applicable. Describe subsystem functions and their interaction with other subsystems.
    c. Identify and describe in detail equipment safeties and control interlocks.
3. Equipment Preventative Maintenance (PM):
    a. Describe PM inspection procedures required to:
        1) Perform an inspection of the equipment in operation.
        2) Spot potential trouble symptoms and anticipate breakdowns.
        3) Forecast maintenance requirements (predictive maintenance).
    b. Define the recommended PM intervals for each component.
    c. Provide lubricant and replacement part recommendations and limitations.
    d. Describe appropriate cleaning practices and recommend intervals.
    e. Identify and describe the use of special tools required for maintenance of the equipment.
    f. Describe component removal/installation and disassembly/assembly procedures.
    g. Perform "hands-on" demonstrations of preventive maintenance procedures.
    h. Describe recommended measuring instruments and procedures, and provide instruction on interpreting alignment measurements, as appropriate. Define recommended torque, mounting, calibration, and/or alignment procedures and settings, as appropriate.
    i. Describe recommended procedures to check/test equipment following a corrective repair.
4. Equipment Troubleshooting:
    a. Define recommended systematic troubleshooting procedures.
    b. Provide component specific troubleshooting checklists.
    c. Describe applicable equipment testing and diagnostic procedures to facilitate troubleshooting.

END OF SECTION

SECTION 03 15 00 - CONCRETE ACCESSORIES

PART 1 - GENERAL

1.01 SECTION INCLUDES

A. Provision of waterstops embedded in concrete and spanning control, expansion, and/or construction joints to create a continuous diaphragm to prevent fluid migration.

B. Provision of strip applied expanding waterstop, embedded in concrete and spanning pipe penetrations, to create a continuous diaphragm for prevention of fluid migration.

1.02 REFERENCES

A. PVC Waterstop:
   1. Corps of Engineers: CRD-C 572-74
   2. American Society for Testing Materials (ASTM)
   3. Bureau of Reclamation: C-902

B. Hydrophilic Waterstop: American Society for Testing Materials (ASTM)

C. Related Sections: Work shall conform to the applicable Sections of Division 03 – Concrete.

1.03 SUBMITTALS

A. Submittals shall be furnished in accordance with Section 01 33 00 – Submittal Procedures.

B. Product Data:
   1. Polyvinyl chloride waterstop: data of complete physical properties.
   2. Stripped applied waterstop: data of complete physical properties.

C. Samples:
   1. Polyvinyl chloride waterstop.
   2. Strip applied waterstop.

1.04 DELIVERY, STORAGE, AND HANDLING

A. PVC waterstops, Store waterstops under tarps to protect from oil, dirt, sunlight, and premature exposure to water.

B. Strip applied waterstop:
   1. Protect waterstops from exposure to moisture that may cause premature waterstop expansion.
   2. Store waterstops under cover to protect from oil, dirt, and sunlight.

PART 2 - PRODUCTS

2.01 PVC WATERSTOPS FOR JOINTS

A. Provide flexible PVC (polyvinyl chloride) waterstop as manufactured by Greenstreak, profile style number. Ribbed with Centerbulb. Model No 735,718,696 or ENGINEER-approved equal.

B. The PVC waterstop shall be extruded from an elastomeric plastic material of which the basic resin is prime virgin polyvinyl chloride. The PVC compound shall not contain any scrapped or reclaimed material or pigment whatsoever.

C. Performance Requirements as Follows:

Property	Test Method	Required Limits
Water Absorption	ASTM D570	0.15% max
Tear Resistance	ASTM D624	200 lb/in (35kN/m) min
Ultimate Elongation	ASTM D638	350% min
Tensile Strength	ASTM D638	200 psi (13.78 Mpa) min
Low Temperature Brittleness	ASTM D746	No Failure @ -35o F (-37o C)
Stiffness in Flexure	ASTM D747	600 psi (4.13 Mpa) min
Specific Gravity	ASTM D792	1.45 max
Hardness, Shore A	ASTM D2240	79 +/- 3
Tensile Strenth After Accelerated Extraction	CRD-C 572	1850 psi (11.03 Mpa) min
Elongation After Accelerated Extraction	CRD-C 572	300% min
Effect of Alkalies after 7 days: Weight Change	CRD-C 572	b/t -0.10% and +0.25%
Hardness Change		+/- 5 points

2.02 STRIP APPLIED WATERSTOP FOR CONCRETE CAST AGAINST EXISTING CONCRETE STRUCTURES

A. Provide strip applied expanding waterstop comprised of modified chloroprene rubber. Product shall be “HYDROTITE”, as supplied by Greenstreak, Inc. 3400 Tree Court Industrial Blvd., St. Louis, MO 63122, Phone: 800-325-9400, Fax: 800-551-5145. Or ENGINEER-approved equal.

B. The waterstop shall be a combination of chloroprene rubber and chloroprene rubber modified to impart hydrophilic properties.

C. The waterstop shall have a delay coating to inhibit initial expansion due to moisture present in fresh concrete.

D. Performance Requirements as follows:

1. Chloroprene Rubber:

Property	Test Method	Required Limits
Tensile Strength	ASTM D412	1300 PSI min
Ultimate Elongation	ASTM D412	400% min
Hardness (Shore A)	ASTM D2240	50 +/- 5
Tear Resistance	ASTM D624	100 lb/in min

2. Modified Chloroprene (Hydrophilic) Rubber:

Property	Test Method	Required Limits
Tensile Strength	ASTM D412	350 PSI min
Ultimate Elongation	ASTM D412	600% min
Hardness (Shore A)	ASTM D2240	52 +/- 5
Tear Resistance	ASTM D624	50 lb/in
Expansion Ration	Volumetric Change-Distilled Water @ 70°F	3 to 1 min

2.03 ACCESSORIES

A. PVC Waterstops:

1. Provide factory made waterstop fabrications for all changes of direction, intersections, and transitions leaving only straight butt joint splices for the field.
2. Provide hog rings or grommets spaced at 12 inches on center along length of waterstop.

3. Provide Teflon coated thermostatically controlled waterstop splicing irons for field butt splices.

B. Strip Applied Waterstops:
   1. Provide SWELLSTOP Primer Adhesive to continuously secure SWELLSTOP to concrete or ENGINEER-approved equal.
   2. Provide concrete nails as required to secure SWELLSTOP and HYDROTITE in vertical or overhead applications or ENGINEER-approved equal.
   3. On rough concrete surfaces apply LEAKMASTER to smooth surfaces and adhere to HYDROTITE.

PART 3 - EXECUTION

3.01 INSTALLATION

A. PVC Waterstop:
   1. Refer to manufacturer installation recommendations.
   2. Field butt splices shall be heat fused welded using a Teflon-covered thermostatically-controlled waterstop splicing iron at approximately 380°F. Follow approved manufacturer recommendations.
   3. Lapping of waterstop, use of adhesives, or solvents shall not be allowed.
   4. Center waterstop in joint and secure waterstop in correct position using hog rings or grommets spaced at 12” on centers along the length of the waterstop and wire tie to adjacent reinforcing steel.

B. Strip Applied Waterstop:
   1. Refer to manufacturer installation recommendations.
   2. Apply primer/adhesive to dry pipe or pipe sleeve surface, 2 inches wide continuously along the joint, maintaining a minimum of 2 inches clear cover to concrete face.
   3. Primer adhesive shall be allowed to “dry to the touch” (typically 30 minutes to several hours; dependent on-site conditions) prior to application of waterstop.
   4. Continuously adhere waterstop to pipe or pipe sleeve utilizing primer adhesive and maintaining a minimum of 2 inches clear cover to concrete face.
   5. Apply waterstop the same day as primer adhesive.
   6. Waterstop shall be butt spliced pressing ends together ensuring no separation or air pockets
   7. Protect waterstop from moisture, dirt, oil, and sunlight during the progress of the work
   8. Remove release paper from waterstop immediately prior to concrete placement.
   9. Inspect waterstop for premature swelling, discontinuity, and debris contamination prior to concrete pour. Replace unacceptable waterstop.
   10. Place and thoroughly vibrate concrete, taking care not to disturb or displace the waterstop. Do not allow vibrator to contact the waterstop.

END OF SECTION

SECTION 03 1516 – CONCRETE CONSTRUCTION JOINTS

PART 1 - GENERAL

1.01 THE REQUIREMENT

A. Construct all joints in concrete at the locations shown. Joints required in concrete structures are of various types and will be permitted only where shown, unless specifically accepted by the ENGINEER.

A. Commercial Standards (ASTM):

C920	Elastomeric Joint Sealants
D412	Rubber Properties in Tension
D624	Rubber Property - Tear Resistance
D638	Tensile Properties of Plastics
D746	Brittleness Temperature of Plastics and Elastomers by Impact
D747	Apparent Bending Modulus of Plastics by Means of a Cantilever Beam
D1056	Flexible Cellular Materials - Sponge or Expanded Rubber
D1752	Preformed Sponge Rubber and Cork Expansion Joint Fillers for Concrete Paving and Structural Construction
D2240	Rubber Property - Durometer Hardness
D2241	Poly (Vinyl Chloride) (PVC) Pressure-Rated Pipe (SDR-Series)

1.02 TYPES OF JOINTS

A. Construction Joints: Provide where shown on the plans. When fresh concrete is placed against a hardened concrete surface, the joint between the two (2) pours is called a construction joint. Unless otherwise specified, all joints in water bearing members shall be provided with a waterstop and sealant groove of the shape specified and shown. The space so formed shall be filled with a joint sealant material as specified in these Specifications.

B. Contraction Joints: Provide where shown on the plans. Contraction joints are similar to construction joints except that the fresh concrete shall not bond to the hardened surface of the first pour, which shall be coated with a bond breaker. The slab reinforcement shall be stopped 4½ inches from the joint; which is provided with a sleeve-type dowel, to allow shrinkage of the concrete of the second pour. Waterstop and/or sealant groove shall also be provided when specified or shown.

C. Expansion Joints: Provide where shown on the plans. To allow the concrete to expand freely, a space is provided between the two pours, the joint shall be formed as shown. This space is obtained by placing a filler joint material against the first pour, which acts as a form for the second pour. Unless otherwise specified, all expansion joints in water bearing members shall be provided with a waterstop as shown.

D. The space so formed shall be filled with a joint sealant material as specified in these Specifications. In order to keep the two (2) walls or slab elements in line the joint shall also be provided with a sleeve-type dowel as shown.

E. Control Joints: The function of the control joint is to provide a weaker plane in the concrete, where shrinkage cracks will probably occur. A groove, of the shape and dimensions shown, is formed or saw-cut in the concrete. This groove is afterward filled with a joint sealant material as specified in these Specifications.

1.03 SUBMITTALS

A. Submittals shall be furnished in accordance with Section 01 3300 – Submittal Procedures.

B. Waterstops: Prior to production of the material required under this contract, qualification samples shall be submitted. Such samples shall consist of extruded or molded sections of each size or shape to be used, and shall be accomplished so that the material and workmanship represents in all respects the material to be furnished under this contract. The balance of the material to be used under this contract shall not be produced until after the ENGINEER has reviewed the qualification samples as defined in these Specifications.

C. Joint Location: Submit placement shop drawings showing the location and type of all joints for each structure, along with the associated pour sequence.

1.04 QUALITY ASSURANCE

A. Waterstop Inspection: It is required that all waterstop field joints shall be subject to rigid inspection, and no such work shall be scheduled or started without having made prior arrangements with the ENGINEER to provide for the required inspections. Not less than 24-hour notice shall be provided to the ENGINEER for scheduling such inspections.

B. All field joints in waterstops shall be subject to rigid inspection for misalignment, bubbles, inadequate bond, porosity, cracks, offsets, and other defects, which would reduce the potential resistance of the material to water pressure at any point. All defective joints shall be replaced with material, which shall pass said inspection, and all faulty material shall be removed from the site and disposed of at no additional cost.

C. The following waterstop defects represent a partial list of defects, which shall be grounds for rejection:
   1. Offsets at joints greater than 1/16-inch or 15% of material thickness, at any point, whichever is less.
   2. Exterior crack at joint, due to incomplete bond, which is deeper than 1/16-inch or 15% of material thickness, at any point, whichever is less.
   3. Any combination of offset or exterior crack which will result in a net reduction in the cross section of the waterstop in excess of 1/16-inch or 15% of material thickness at any point, whichever is less.
   4. Misalignment of joint, which result in misalignment of the waterstop in excess of ½-inch in 10 feet.
   5. Porosity in the welded joint as evidenced by visual inspection.
   6. Bubbles or inadequate bonding which can be detected with a penknife test. (If, while prodding the entire joint with the point of a pen knife, the knife breaks through the outer portion of the weld into a bubble, the joint shall be considered defective.)

D. Waterstop Samples: Prior to use of the waterstop material in the field, a sample of each size or shape of material to be used shall be submitted to the ENGINEER for review. These samples shall be fabricated so that the material and workmanship represent in all respects the fittings to be furnished under this contract. Field samples of fabricated fittings (crosses, tees, etc.) may be selected at random by the ENGINEER for testing by a laboratory at no additional expense to the ENGINEER. When tested, they shall have a tensile strength across the joints equal to at least 600 psi.

E. Construction Joint Sealant: As per these Specifications.

PART 2 - PRODUCTS

2.01 PVC AND HYDROPHILIC WATERSTOP

A. General: As defined in these Specifications.

2.02 BACKING ROD

A. Backing rod shall be an extruded closed-cell, polyethylene foam rod. The material shall be compatible with the joint sealant material used and shall have a tensile strength of not

less than 40 psi and a compression deflection of approximately 25% at 8 psi. The rod shall be 1/8-inch larger in diameter than the joint width except that a 1-inch diameter rod shall be used for a ¾-inch wide joint.

2.03 BOND BREAKER

A. Bond breaker shall be Super Bond Breaker as manufactured by Burke Company, San Mateo, California; Select Cure CRB as manufactured by Select Products Co., Upland, California; or ENGINEER-approved equal. It shall contain a fugitive dye so that areas of application will be readily distinguishable. Provide where shown on the plans.

2.04 SLIP DOWELS

A. Slip dowels in joints shall be A36 smooth epoxy-coated bars, conforming to ASTM A775. Provide where shown on the plans.

PART 3 - EXECUTION

3.01 GENERAL

A. Waterstops of the type specified herein shall be embedded in the concrete across joints as shown. All waterstops shall be fully continuous for the extent of the joint. Splices necessary to provide such continuity shall be accomplished in conformance to printed instructions of manufacturer of the waterstops. Suitable precautions and means to support and protect the waterstops during the progress of the work and shall repair or replace at its own expense any waterstops damaged during the progress of the work shall be taken. All waterstops shall be stored so as to permit free circulation of air around the waterstop material.

B. When any waterstop is installed in the concrete on one side of a joint, while the other half or portion of the waterstop remains exposed to the atmosphere for more than 2 days, suitable precautions shall be taken to shade and protect the exposed waterstop from direct rays of the sun during the entire exposure and until the exposed portion of the waterstop is embedded in concrete.

3.02 SPLICES IN WATERSTOPS

A. When applicable, splices in waterstops shall be performed by heat-sealing the adjacent waterstop sections in accordance with the manufacturer's printed recommendations. It is essential that:
   1. The material not be damaged by heat sealing.
   2. The splices have a tensile strength of not less than 60 percent of the unspliced materials tensile strength.
   3. The continuity of the waterstop ribs and of its tubular center axis be maintained.

B. Butt joints of the ends of two (2) identical waterstop sections may be made while the material is in the forms.

C. All joints with waterstops involving more than two (2) ends to be jointed together, and all joints which involve an angle cut, alignment change, or the joining of two (2) dissimilar waterstop strips of waterstop material beyond the joint. Upon being inspected and approved, such prefabricated waterstop joint assemblies shall installed in the forms and the ends of the 24-inch sections shall be prefabricated prior to placement in the forms, allowing not less than 24-inch-long strips shall be butt welded to the straight run portions of waterstop in place in the forms.

D. Where a centerbulb waterstop intersects and is jointed with a non-centerbulb waterstop, care shall be taken to seal the end of the centerbulb, using additional PVC material if needed.

3.03 JOINT CONSTRUCTION

A. Setting Waterstops: In order to eliminate faulty installation that may result in joint leakage, particular care shall be taken of the correct positioning of the waterstops during installation. Adequate provisions must be made to support and anchor the waterstops during progress and to insure the proper placement and or embedment in the concrete. The symmetrical halves of the waterstops shall be equally divided between the concrete pours at the joints. The center axis of the waterstops shall be coincident with the joint openings. Maximum density and imperviousness of the concrete shall be insured by thoroughly working it near all joints.

B. In placing flat-strip hydrotite waterstops in the forms, means shall be provided to prevent them from being folded over by the concrete as it is placed. Unless otherwise shown, all hydrotite waterstops shall be held in place with light wire ties on 12-inch centers, which shall be passed through the edge of the hydrotite waterstop and tied to the curtain of reinforcing steel. Horizontal hydrotite waterstops, with their flat face in a vertical plane, shall be held in place with continuous supports to which the top edge of the hydrotite waterstop shall be tacked. In placing concrete around horizontal hydrotite waterstops, with their flat face in a horizontal plane, concrete shall be worked under the hydrotite waterstops by hand so, as to avoid the formation of air and rock pockets.

C. In placing centerbulb waterstops in expansion joints, the centerbulb shall be centered on the joint filler material.

D. Waterstop in vertical wall joints shall stop 6 inches from the top of the wall where such waterstop does not connect with any other waterstop and is not to be connected to for a future concrete placement.

E. Joint Location: Construction joints, and other types of joints, shall be provided where shown. When not shown, construction joints shall be provided at 25-foot maximum spacing for all concrete construction, unless noted otherwise. Where joints are shown spaced greater than 40-feet apart, additional joints shall be provided to maintain the 25-foot maximum spacing. The location of all joints, of any type, shall be submitted for acceptance by the ENGINEER.

F. Joint Preparation: Special care shall be used in preparing concrete surfaces at joints where bonding between two (2) sections of concrete is required. Unless otherwise shown, such bonding will be required at all horizontal joints in walls. Surfaces shall be prepared in accordance with the requirements of the applicable Sections of Division 03 – Concrete. Except on horizontal wall construction joints, wall to slab joints or where otherwise shown or specified, at all joints where waterstops are required, the joint face of the first pour shall be coated with a bond breaker as shown on the plans.

G. Construction Joint Sealant: Construction joints in water-bearing floor slabs, and elsewhere as shown, shall be provided with tapered grooves, which shall be filled with a construction joint sealant. The material used for forming the tapered grooves shall be left in the grooves until just before the grooves are cleaned and filled with joint sealant. After removing the forms from the grooves, all laitance and fins shall be removed, and the grooves shall be sandblasted. The grooves shall be allowed to become thoroughly dry, after which they shall be blown out; immediately thereafter, install the joint sealant per these Specifications, they shall be primed, bond breaker tape placed in the bottom of the groove, and filled with the construction joint sealant. The primer used shall be supplied by the same manufacturer supplying the sealant. No sealant will be permitted to be used without a primer. Care shall be used to completely fill the sealant grooves. Areas designated to receive a sealant fillet shall be thoroughly cleaned, as outlined for the tapered grooves, prior to application of the sealant.

END OF SECTION

SECTION 03 2000 – CONCRETE REINFORCING

PART 1 - GENERAL

1.01 THE REQUIREMENT

A. Furnish, fabricate, and place all concrete reinforcement steel, welded wire fabric, couplers, and concrete inserts for use in reinforced concrete construction and perform all appurtenant work, including installation of all the wires, clips, supports, chairs, spacers, and other accessories, all in accordance with the Contract Documents.

B. American Iron and Steel (AIS) requirement applies to this section. All iron and steel products used in this project must be produced in the United States.

1.02 REFERENCE SPECIFICATIONS, CODES AND STANDARDS

A. Codes: Codes: All codes, as referenced herein are specified in applicable Sections of Division 01 – General Requirements.

B. Commercial Standards:

ACI 315	Details and Detailing of Concrete Reinforcement
ACI 318	Building Code Requirements for Reinforced Concrete
CRSI MSP-1	Concrete Reinforcing Steel Institute Manual of Standard Practice
AWS D1.4	Structural Welding Code - Reinforcing Steel
ASTM A82	Steel Wire, Plain, for Concrete Reinforcement
ASTM A615	Deformed and Plain Billet-Steel Bars for Concrete Reinforcement
ASTM A775	Epoxy-Coated Reinforcing Steel Bars

1.03 SUBMITTALS

A. Submittals shall be furnished in accordance with Section 01 3300 – Submittal Procedures.

B. Submittals shall include shop bending diagrams, placing lists, drawings of all reinforcement steel prior to fabrication and mill test reports.

C. Details of the concrete reinforcement steel and concrete inserts shall be submitted at the earliest possible date after receipt by the CONTRACTOR of the Notice to Proceed. Said details of reinforcement steel for fabrication and erection shall conform to ACI 315 and the requirements specified and shown. The shop bending diagrams shall show the actual lengths of bars, to the nearest inch measured to the intersection of the extensions (tangents for bars of circular cross-section) of the outside surface. The shop drawings shall include bar placement diagrams, which clearly indicate the dimensions of each bar splice.

D. Where mechanical couplers are required or permitted to be used to splice reinforcement steel, submit manufacturer's literature which contains instructions and recommendations for installation for each type of coupler used; certified test reports which verify the load capacity of each type and size of coupler used; and shop drawings which show the location of each coupler with details of how they are to be installed in the formwork.

E. If reinforcement steel is spliced by welding at any location, submit mill test reports, which shall contain the information necessary for the determination of the carbon equivalent as specified in AWS D1.4. Submit a written welding procedure for each type of weld for each size of bar which is to be spliced by welding; merely a statement that AWS procedures will be followed is not acceptable.

F. Submit all reinforcing product mill certificates.

1.04 QUALITY ASSURANCE

A. If requested by the ENGINEER, the CONTRACTOR shall provide samples from each heat of reinforcement steel delivered in a quantity adequate for testing. Costs of all tests will be paid by the CONTRACTOR.

B. If reinforcement steel is spliced by welding at any location, the CONTRACTOR shall submit certifications of procedure qualifications for each welding procedure used and certification of welder qualifications, for each welding procedure, and for each welder performing the work. Such qualifications shall be as specified in AWS D1.4.

C. If requested by the ENGINEER, the CONTRACTOR shall provide samples of each type of welded splice used in the WORK in a quantity and of dimensions adequate for testing. At the discretion of the ENGINEER, radiographic testing of direct butt-welded splices will be performed. The CONTRACTOR shall assist as necessary to facilitate testing. The CONTRACTOR shall repair any weld, which fails to meet the requirements of AWS D1.4. The costs of testing will be paid by the CONTRACTOR.

PART 2 - PRODUCTS

2.01 REINFORCEMENT STEEL

A. Reinforcement Steel for all cast-in-place reinforced concrete construction shall conform to the following requirements:
   1. Bar reinforcement shall conform to the requirements of ASTM A615 for Grade 60 Billet Steel Reinforcement or as otherwise shown.
   2. Welded wire fabric reinforcement shall conform to the requirements of ASTM A185 and the details shown; provided, that welded wire fabric with longitudinal wire of W4 size wire and smaller shall be either furnished in flat sheets or in rolls with a core diameter of not less than 10 inches; and provided further, that welded wire fabric with longitudinal wires larger than W4 size shall be furnished in flat sheets only.
   3. Spiral reinforcement shall be cold-drawn steel wire conforming to the requirements of ASTM A82.

B. Accessories:
   1. Accessories shall include all necessary chairs, slab bolsters, concrete blocks, tie wires, dips, supports, spacers, and other devices to position reinforcement during concrete placement. All bar supports shall meet the requirements of the CRSI Manual of Standard Practice including special requirements for supporting epoxy coated reinforcing bars. Wire bar supports shall be CRSI Class 1 for maximum protection with a 1/8-inch minimum thickness of plastic coating, which extends at least ½-inch from the concrete surface. Plastic shall be gray in color.
   2. Concrete blocks (dobies), used to support and position reinforcement steel, shall have the same or higher compressive strength as specified for the concrete in which it is located. Wire ties shall be embedded in concrete block bar supports.

C. Epoxy coating for reinforcing and accessories, where specified or shown, shall conform to ASTM A775.

2.02 MECHANICAL COUPLERS

A. Mechanical couplers shall be provided where shown and where approved by the ENGINEER. The couplers shall develop a tensile strength, which exceeds 125% of the yield strength of the reinforcement bars being spliced at each splice.

B. Where the type of coupler used is composed of more than one component, all components required for a complete splice shall be supplied. This shall apply to all mechanical splices, including those splices intended for future connections.

C. The reinforcement steel and coupler used shall be compatible for obtaining the required strength of the connection. Straight threaded type couplers shall require the use of the next larger size reinforcing bar or shall be used with reinforcing bars with specially forged ends which provide upset threads which do not decrease the basic cross section of the bar.

D. Couplers shall be Lenton Form Saver as manufactured by Erico Products; Dowel Bar Splicer System as manufactured by Richmond Screw Anchor Company; or ENGINEER-approved equal.

2.03 WELDED SPLICES

A. Welded splices shall be provided where shown and where approved by the ENGINEER. All welded splices of reinforcement steel shall develop a tensile strength, which exceeds 125% of the yield strength of the reinforcement bars, which are connected.

B. All materials required to conform the welded splices to the requirements of AWS D1.4 shall be provided.

2.04 EPOXY GROUT

A. Epoxy for grouting reinforcing bars shall be specifically formulated for such application, for the moisture condition, application temperature and orientation of the hole to be filled. Epoxy grout shall meet the requirements of these Specifications.

PART 3 - EXECUTION

3.01 GENERAL

A. All reinforcement steel, welded wire fabric, couplers and other appurtenances shall be fabricated, and placed in accordance with the requirements of the Building Code and the Supplementary Requirements specified herein.

3.02 FABRICATION

A. General:
   1. Reinforcement steel shall be accurately formed to the dimensions and shapes shown, and the fabricating details shall be prepared in accordance with ACI 315 and ACI 318, except as modified by the Contract Drawings. Stirrups and tie bars shall be bent around a pin having a diameter not less than 1½-inch for No. 3 bars, 2-inch for No. 4 bars, and 2½-inch for No. 5 bars. Bends for other bars shall be made around a pin having a diameter not less than 6 times the bar diameter, except for bars larger than 1-inch, in which case the bends shall be made around a pin of 8 bar diameters. Bars shall be bent cold.
   2. The CONTRACTOR shall fabricate reinforcement bars for structures in accordance with bending diagrams, placing lists, and placing drawings. Said drawings, diagrams and lists shall be prepared by the CONTRACTOR as specified under Section 01 3300 – Submittal Procedures.

B. Fabricating Tolerances: Bars used for concrete reinforcement shall meet the following requirements for fabricating tolerances:
   1. Sheared length: +/- 1-inch
   2. Depth of truss bars: + 0, - ½-inch
   3. Stirrups, ties, and spirals: +/- ½-inch
   4. All other bends: +/- 1-inch

3.03 PLACING

A. Reinforcement steel shall be accurately positioned as shown, and shall be supported and wired together to prevent displacement, using annealed iron wire ties or suitable clips at intersections. All reinforcement steel shall be supported by concrete, plastic or metal supports, spacers or metal hangers, which are strong and rigid enough to prevent any displacement of the reinforcement steel. Where concrete is to be placed on the ground, supporting concrete blocks (or dobies) shall be used, in sufficient numbers to support the bars without settlement, but in no case shall such support be continuous. All concrete blocks used to support, reinforcement steel shall be tied to the steel with wire ties, which are embedded in the blocks. For concrete over formwork, the CONTRACTOR shall furnish concrete, metal, plastic or other acceptable bar chairs and spacers.

B. Limitations on the use of bar support materials shall be as follows:
   1. Concrete Dobies: Permitted at all locations except where architectural finish is required.
   2. Wire Bar Supports: Permitted only at slabs over dry areas, interior dry wall surfaces and exterior wall surfaces.
   3. Plastic Bar Supports: Permitted at all locations except on grade.

C. Tie wires shall be bent away from the forms in order to provide the specified concrete coverage.

D. Bars additional to those shown which may be found necessary or desirable by the ENGINEER for the purpose of securing reinforcement in position shall be provided by the CONTRACTOR at its own expense.

E. Unless otherwise specified, reinforcement placing tolerances shall be within the limits specified in Section 7.5 of ACI 318 except where in conflict with the requirements of the Building Code.

F. Bars may be moved as necessary to avoid interference with other reinforcement steel, conduits, or embedded items. If bars are moved more than one bar diameter, or enough to exceed the above tolerances, the resulting arrangement of bars shall be as acceptable to the ENGINEER.

G. Accessories supporting reinforcing bars shall be spaced such that there is no deflection of the accessory from the weight of the supported bars. When used to space the reinforcing bars from wall forms, the forms and bars shall be located so that there is no deflection of the accessory when the forms are tightened into position.

3.04 SPACING OF BARS

A. The clear distance between parallel bars (except in columns and between multiple layers of bars in beams) shall be not less than the nominal diameter of the bars nor less than 1-1/3 times the maximum size of the coarse aggregate, nor less than 1-inch.

B. Where reinforcement in beams or girders is placed in two (2) or more layers, the clear distance between layers shall be not less than one inch.

C. In columns, the clear distance between longitudinal bars shall be not less than 1½ times the bar diameter, nor less than 1½ times the maximum size of the coarse aggregate, nor less than 1½ inches.

D. The clear distance between bars shall also apply to the distance between a contact splice and adjacent splices or bars.

3.05 SPLICING

A. General:
   1. Reinforcement bar splices shall only be used at locations shown. When it is necessary to splice reinforcement at points other than where shown, the character of the splice shall be as acceptable to the ENGINEER.
   2. Unless, otherwise indicated, dowels shall match the size and spacing of the spliced bar.

B. Splices of Reinforcement:
   1. The length of lap for reinforcement bars, unless otherwise shown shall be in accordance with ACI 318-89, Section 12.15.1 for a Class B splice.
   2. Splices in column spiral reinforcement, when necessary, shall be made by welding or by a lap of 1½ turns.

C. Bending or Straightening: Reinforcement shall not be straightened or re-bent in a manner, which will injure the material. Bars with kinks or bends not shown shall not be used. All bars shall be bent cold, unless otherwise permitted by the ENGINEER. No bars partially embedded in concrete shall be field-bent except as shown or specifically permitted by the ENGINEER.

D. Couplers, which are located at a joint face, shall be a type, which can be set either flush or recessed from the face. The couplers shall be sealed during concrete placement to completely eliminate concrete or cement paste from entering. Couplers intended for future connections shall be recessed a minimum of ½-inch from the concrete surface. After the concrete is placed, the coupler shall be plugged with plastic plugs, which have an O-ring seal and the recess filled with sealant to prevent any contact with water or other corrosive materials. Threaded couplers shall be plugged.

E. Unless noted otherwise, mechanical coupler spacing and capacity shall match the spacing and capacity of the reinforcing shown for the adjacent section.

3.06 CLEANING AND PROTECTION

A. Reinforcement steel shall at all times be protected from conditions conducive to corrosion until concrete is placed around it.

B. The surfaces of all reinforcement steel and other metalwork to be in contact with concrete shall be thoroughly cleaned of all dirt, grease, loose scale and rust, grout, mortar, and other foreign substances immediately before the concrete is placed. Where there is delay in depositing concrete, reinforcement shall be reinserted and, if necessary recleaned.

3.07 EMBEDMENT OF DRILLED REINFORCING STEEL DOWELS

A. Hole Preparation:
   1. The hole diameter shall be as recommended by the epoxy manufacturer but shall be no larger than 0.25-inch greater than the diameter of the outer surface of the reinforcing bar deformations.
   2. The depth of the hole shall be as recommended by the epoxy manufacturer to fully develop the bar but shall not be less than 12 bar diameters, unless noted otherwise.
   3. The hole shall be drilled by methods, which do not interfere with the proper bonding of epoxy.
   4. Existing reinforcing steel in the vicinity, of proposed holes shall be located prior to drilling. The location of holes to be drilled shall be adjusted to avoid drilling through or nicking any existing reinforcing bars.
   5. The hole shall be blown clean with clean, dry compressed air to remove all dust and loose particles.

6. Epoxy shall be injected into the hole through a tube placed to the bottom of the hole. The tube shall be withdrawn as epoxy is placed but kept immersed to prevent formation of air pockets. The hole shall be filled to a depth that insures that excess material will be expelled from the hole during dowel placement.
7. Dowels shall be twisted during insertion into the partially filled hole so as to guarantee full wetting of the bar surface with epoxy. The bar shall be inserted slowly enough to avoid developing air pockets.

END OF SECTION

SECTION 03 30 00 – CAST-IN-PLACE CONCRETE

PART 1 - GENERAL

1.01 THE REQUIREMENT

A. Furnish all materials for concrete in accordance with the provisions of this Section and form, mix, place, cure, repair, finish, and do all other work as required to produce finished concrete, in accordance with the requirements of the Contract Documents.

B. Soils Report: This work shall conform to the requirements of the latest Geotechnical Evaluation and or Soils Report.

C. The following types of concrete are covered in this Section:
   1. Structural Concrete: Concrete to be used in all cases except where indicated otherwise in the Contract Documents.
   2. Sitework Concrete: Concrete to be used for curbs, gutters, catch basins, sidewalks, pavements, fence and guard post embedment, underground duct bank encasement and all other concrete appurtenant to electrical facilities unless otherwise indicated.
   3. Lean Concrete: Concrete to be used for thrust blocks, pipe trench cut-off blocks and cradles that are detailed on the Drawings as un-reinforced. Lean concrete shall be used as protective cover for dowels intended for future connection.

D. The term "hydraulic structure" used in these specifications means environmental engineering concrete structures for the containment, treatment or transmission of water, wastewater, or other fluids.

E. American Iron and Steel (AIS) requirement applies to this section. All iron and steel products used in this project must be produced in the United States.

1.02 REFERENCE SPECIFICATIONS, CODES AND STANDARDS

A. The work shall conform to the requirements of the applicable Sections of these Specifications Divisions:
   1. 01 – General Requirements
   2. 03 – Concrete

B. Commercial Standards:
   ACI 117 - Concrete Construction and Materials
   ACI 214 - Evaluation of Strength Test Results of Concrete
   ACI 301 - Structural Concrete for Buildings
   ACI 306.1 - Cold Weather Concreting
   ACI 309 - Consolidation of Concrete
   ACI 315 - Details and Detailing of Concrete Reinforcement
   ACI 318 - Building Code Requirements for Reinforced Concrete
   ACI 350R - Environmental Engineering Concrete Structures
   ASTM C31 - Making and Curing Concrete Test Specimens in the Field
   ASTM C33 - Concrete Aggregates
   ASTM C39 - Compressive Strength of Cylindrical Concrete Specimens
   ASTM C94 - Ready-Mixed Concrete
   ASTM C136 - Sieve Analysis of Fine and Coarse Aggregates
   ASTM C143 - for Slump of Hydraulic Cement Concrete
   ASTM C150 - Portland Cement
   ASTM C156 - Water Retention by Concrete Curing Materials
   ASTM C157 - Length Change of Hardened Hydraulic Cement Mortar and Concrete

ASTM C192 - Making and Curing Concrete Test Specimens in the Laboratory
ASTM C260 - Air-Entraining Admixtures for Concrete
ASTM C309 - Liquid Membrane-Forming Compounds for Curing Concrete
ASTM C494 - Chemical Admixtures for Concrete
ASTM C1077 - Laboratories Testing Concrete and Concrete Aggregates for use in Construction & Criteria for Laboratory Evaluation
ASTM D175 - Preformed Expansion Joint Fillers for Concrete Paving and Structural Construction (Non-extruding and Resilient Bituminous Types)
ASTM D448 - Sizes of Aggregate for Road and Bridge Construction
ASTM D2419 - Sand Equivalent Value of Soils and Fine Aggregate
ASTM E119 - Fire Tests of Building Construction and Materials

1.03 SYSTEM DESCRIPTIONS

A. Performance Requirements:
1. General:
a. Except as otherwise specified, provide concrete composed of Portland cement, aggregate, and water so proportioned and mixed as to produce plastic, cohesive workable mixture in accordance with requirements as specified in this Section and suitable to specific conditions of placement.
b. Due to the corrosivity of the soil and recommendations from the Geotechnical Evaluation, concrete shall be made with cement that provides sulfate resistance and that has a maximum water-cementitious materials ratio and minimum compressive strength set forth in 2006 IBC and ACI 318. See also the Geotechnical Evaluation.
c. Proportion fine and coarse aggregates in a manner such as not to produce harshness in placing nor honeycombing in structures.
2. Water tightness of Concrete Work: It is intent of this Section to secure for every part of the Work concrete and grout of homogeneous structure, which when hardened will have required strength, water tightness, and durability. As provided in ACI 350.1/350.1R Concrete for Environmental Structures.
a. It is recognized that some surface hairline cracks and crazing will develop in concrete surfaces.
b. Construction, contraction, and expansion joints have been positioned in structures as indicated on the Drawings, and curing methods specified, for purpose of reducing number and size of these expected from specified concrete mixes.
c. Watertight: Repair cracks as described in this Section which develop in walls or slabs and repair cracks which show any signs of leakage until all leakage is stopped.
d. If patching does not stop the leakage and at the engineer's discretion the installing CONTRACTOR shall pressure inject visible cracks, other than hairline cracks and crazing, in following areas with epoxy as specified in applicable Sections of Division 03 – Concrete.
1) Floors and walls of water bearing structures.
2) Walls and overhead slabs of passageways or occupied spaces, outsides of which are exposed to weather or may be washed down and are not specified to receive separate waterproof membrane.
3) Other Items Not Specified to Receive Separate Waterproof Membrane: Slabs over water channels, wet walls, reservoirs, and other similar surfaces.

3. Workmanship and Methods: Provide concrete work, including detailing of reinforcing, conforming with best standard practices, and as set forth in ACI 318, Manuals, and Recommended Practices.

1.04 SUBMITTALS

A. Submittals shall be furnished in accordance with Section 01 3300 – Submittal Procedures.

B. Product Data: Submit data completely describing products.

C. Information on Heating Equipment to Be Used for Cold Weather Concreting: Submit information on type of equipment to be used for heating materials and/or new concrete in process of curing during excessively cold weather.

D. For conditions that promote rapid drying of freshly placed concrete such as low humidity, high temperature, and wind: Submit corrective measures proposed for use prior to placing concrete.

E. Copies of Tests of Concrete Aggregates: Submit certified copies in triplicate of commercial laboratory tests not more than 90 days old of all samples of concrete aggregates.
   1. Fine Aggregate:
      a. Clay lumps
      b. Reactivity
      c. Shale and chert
      d. Soundness
      e. Color
      f. Decantation
   2. Coarse Aggregate:
      a. Clay lumps and friable particles
      b. Reactivity
      c. Shale and chert
      d. Soundness.
      e. Abrasion loss
      f. Coal and lignite
      g. Materials finer than 200 sieve

F. Sieve Analysis: Submit sieve analysis of fine and coarse aggregates being used in triplicate at least every 3 weeks and at any time there is significant change in grading of materials.

G. Concrete Mixes: Submit full details, including mix design calculations for concrete mixes proposed for use for each class of concrete.
   1. Include information on correction of batching for varying moisture contents of fine aggregate.
   2. Submit source quality test records with mix design submittal.

H. If There is Change in Aggregate Source, Aggregate Quality from Same Source: Submit new set of design mixes covering each class of concrete.

I. If Either Fine or Coarse Aggregate Is Batched from More than One Bin: Submit analyses for each bin, and composite analysis made up from these, using proportions of materials to be used in mix.

J. Cement Mill Tests: Include alkali content, representative of each shipment of cement for verification of compliance with specified requirements.

K. Pozzolan Certificate of Compliance: Identify source of pozzolan and certify compliance with requirements of ASTM C618.

L. Information on mixing equipment.

M. Drying shrinkage test data.

N. Packing and Shipping:
   1. Deliver, store, and handle concrete materials in manner as to prevent damage and inclusion of foreign substances.
   2. Deliver and store packaged materials in original containers until ready for use.
   3. Deliver aggregate to mixing site and handle in such a manner that variations in moisture content will not interfere with steady production of concrete of specified degree of uniformity and slump.

O. Acceptance at Site: Reject material containers or materials showing evidence of water or other damage.

P. Test Batch Test Data:
   1. Submit data for each test cylinder.
   2. Submit data that identifies mix and slump for each test cylinder.

Q. Sequence of Concrete Placing: Submit proposed sequence of placing concrete showing proposed beginning and ending of individual placements.

R. Ties to be used and the tie hole patching procedure and methods and materials.

S. Curing Compound Other than Specified Compound: Submit complete data on proposed compound.

T. Repair of Defective Concrete: Submit mix design for grout or product data if mixed onsite.

U. Acceptance of Method of Concrete Repair: Make no repair until the ENGINEER has accepted method.

1.05 QUALITY ASSURANCE

A. General
   1. Manufacturer Qualifications: A firm experienced in manufacturing ready-mixed concrete products and that complies with ASTM C94/C 94M requirements for production facilities and equipment.
   2. Tests for compressive strength and shrinkage of concrete shall be performed as indicated herein. Test for determining slump will be in accordance with the requirements of ASTM C143.
   3. The cost of all laboratory tests on concrete will be borne by the CONTRACTOR. The laboratory will meet or exceed the requirements of ASTM C1077.
   4. Concrete for testing shall be supplied by the CONTRACTOR at no additional cost to the OWNER, and the CONTRACTOR shall assist the ENGINEER in obtaining samples, and disposal and cleanup of excess material.

B. Field Testing of Concrete:
   1. During progress of construction, the CONTRACTOR will have tests made to determine whether the concrete, as being produced, complies with requirements specified.
   2. Tests will be performed in accordance with ASTM C31, ASTM C39, and ASTM C172.
   3. The testing company will make and deliver test cylinders to the laboratory and testing expense will be borne by the CONTRACTOR.
   4. Required Number Cylinders:

a. Not less than 3 cylinder specimens, 6 inch diameter by 12 inch long, will be tested for each 150 cubic yards of each class of concrete placed and not less than 3 specimens for each half day's placement.
b. One cylinder will be broken at 7 days and 2 at 28 days.

5. The Testing Agency shall:
   a. Test slump of concrete using slump cone in accordance with the requirements of ASTM C143.
   b. Furnish test equipment.
   c. Do not use the concrete that does not meet specification requirements in regards to slump, but remove such concrete from project site.
   d. Test slump at the beginning of each placement, as often as necessary to keep slump within the specified range, and when requested to do so by the ENGINEER.
   e. Make provisions for and furnish concrete for test specimens, and provide manual assistance to the ENGINEER in preparing said specimens.
   f. Assume responsibility for care of and providing of curing conditions for test specimens in accordance with ASTM C31.

C. Enforcement of Strength Requirement:
   1. Concrete is expected to reach higher compressive strength than that which is indicated on the drawings and herein as specified compressive strength f'c.
   2. Strength Level of Concrete: Will be considered acceptable if the following conditions are satisfied.
      a. Average of all sets of 3 consecutive test results is greater or equal to specified compressive strength f'c.
      b. No individual strength test (average of 2 cylinders) falls below specified compressive strength f'c by more than 500 pounds per square inch.
      c. Whenever one, or both, of 2 conditions stated above is not satisfied, provide additional curing of affected portion followed by cores taken in accordance with ASTM C42 and ACI 318 and comply with the following requirements.
         1) If additional curing does not bring average of 3 cores taken in affected area to at least specified compressive strength f'c, designate such concrete in affected area as defective.
         2) The ENGINEER may require the CONTRACTOR to strengthen defective concrete by means of additional concrete, all at the CONTRACTOR's expense.

D. Construction Tolerances: The CONTRACTOR shall set and maintain concrete forms and perform finishing operations to ensure that the completed WORK is within tolerances. Surface defects and irregularities are defined as finishes and are to be distinguished from tolerances. Tolerance is the permissible variation from lines, grades, or dimensions indicated on the Drawings. Where tolerances are not stated in the specifications, permissible deviations will be in accordance with ACI 117.
   1. The following construction tolerances apply to finished walls and slab unless otherwise indicated:

Item	**Tolerance**
Variation of the Constructed Linear Outline from the Established Position in Plan	In 10 feet: 1/4-in In 20 feet or more: 1/2-in
Variation from the Level or from the Grades Shown	In 10 feet: 1/4-in In 20 feet or more: 1/2-in
Variation from the Plumb	In 10 feet: 1/4-in In 20 feet or more: 1/2-in

Variation in the Thickness of Slabs and Walls	Minus 1/4-in Plus 1/2-in
Variation in the Locations and Sizes of Slabs and Wall Openings	Plus or minus 1/4-in
Variation in Weirs Hydraulic Control Structures	Max deviation in elevation 1/4 in (total)

1.06 PROJECT CONDITIONS

A. Environmental Requirements:
   1. Hot weather concreting:
      a. When Ambient Air Temperature Is Above 90°F: Prior to placing concrete, cool forms and reinforcing steel by water cooling to below 90°F.
      b. Temperature of Concrete Mix at Time of Placement: Keep temperature below 90°F by methods which do not impair quality of concrete.
   2. Cold Weather Concreting:
      a. Concrete placed below ambient air temperature of 45°F and falling or below 40°F: Make provision for heating water.
      b. If materials have been exposed to freezing temperatures to degree that any material is below 35°F: Heat such materials.
      c. Heating Water, Cement, or Aggregate Materials:
         1) Do not heat in excess of 160°F.
      d. Protection of Concrete in Forms:
         1) Protect by means of covering with tarpaulins, or other acceptable covering.
         2) Provide means for circulating warm moist air around forms in manner to maintain temperature of 50°F for at least 5 days.
   3. For conditions that promote rapid drying of freshly placed concrete such as low humidity, high temperature, and wind: Take corrective measures to minimize rapid water loss from concrete.
      a. Furnish and use sufficient number of maximum and minimum self-recording thermometers to adequately measure temperature around concrete.

1.07 SEQUENCING AND SCHEDULING

A. Schedule placing of concrete in such a manner as to complete any single placing operation to construction, contraction, or expansion joint.

PART 2 - PRODUCTS

2.01 CONCRETE MATERIALS

A. Aggregate
   1. General:
      a. Provide concrete aggregates that are sound, uniformly graded, and free of deleterious material in excess of allowable amounts specified.
      a. Grade aggregate in accordance with ASTM D75 and C136.
      b. Provide unit weight of fine and coarse aggregate which produces in place concrete with weight of not less than 140 pounds per cubic foot.

B. Fine Aggregate:
   1. Provide fine aggregate for concrete or mortar consisting of clean, natural sand or of sand prepared from crushed stone or crushed gravel.

2. Do not provide aggregate having deleterious substances in excess of the following percentages by weight of contaminating substances. In no case shall total exceed percent listed.

Item	Test Method	Percent
Removed by Decantation (dirt, silt, etc.)	ASTM C117	3
Shale or Chert	ASTM C295	1
Clay Lumps	ASTM C142	1

3. Except as otherwise specified, grade fine aggregate from coarse to fine in accordance with requirements of ASTM C33.

C. Coarse Aggregate:
1. General: Provide coarse aggregate consisting of gravel or crushed stone made up of clean, hard, durable particles free from calcareous coatings, organic matter, or other foreign substances.
2. Weight: Not exceeding 15 percent, for thin or elongated pieces having length greater than 5 times average thickness.
3. Deleterious Materials: Not in excess of following percentages by weight, and in no case having total of all deleterious substances exceeding 2 percent.

Item	Test Method	Percent
Shale or Chert	ASTM C295	1
Coal and Lignite	ASTM C123	1/4
Clay Lumps and Friable Particles	ASTM C142	1/4
Materials Finer than Number 200 Sieve	ASTM C117	1/2*

NOTE: (*) Except when material finer than Number 200 sieve consists of crusher dust, maximum amount shall be 1 percent>

4. Grading:
   a. Aggregate: As specified in ASTM C33, Size Number 57, except as otherwise specified or authorized in writing by the ENGINEER.
   b. Aggregate for Concrete for Encasement of Electrical Conduits:
      1) Graded as specified in ASTM C33, Size Number 8.
      2) Provide concrete utilizing this aggregate equal to 2500 psi concrete in all other respects, and is designated as Class CE.

D. Portland Cement:
1. General: Conform to specifications and tests for ASTM C150, except as specified otherwise.
2. Low Alkali Portland: Have total alkali containing not more than 0.60 percent, unless specified otherwise, and or where soil conditions permit such use.
3. Exposed Concrete in Any Individual Structure: Use only one brand of Portland cement.
4. Cement for Finishes: Provide cement from the same source and of same type as concrete to be finished.

E. Admixtures:
1. General:
   a. Do not use admixtures of any type, except as specified, unless written authorization has been obtained from the ENGINEER.
   b. Compatible with concrete and other admixtures.

c. Do not use admixtures containing chlorides calculated as chloride ion in excess of 0.5 percent by weight.
d. Use in accordance with manufacturer's recommendations and add each admixture to concrete mix separately.

2. Water Reducing Admixture:
   a. May be used at the CONTRACTOR's option.
   b. Conform to ASTM C494, Type A or Type D.
   c. Not contain air entraining agents.
   d. Liquid form before adding to the concrete mix.
   e. No decrease in cement is permitted as result of use of water reducing admixture.
3. Superplasticizers or Flyash: Are not to be used without acceptance by ENGINEER.

F. Water:
1. Water for Concrete, Washing Aggregate, and Curing Concrete: Clean and free from oil and deleterious amounts of alkali, acid, organic matter, or other substances.
2. Chlorides and Sulfate Ions:
   a. Water for Conventional Reinforced Concrete: Use water not containing more than 1,000 (mg/L) of chlorides calculated as chloride ion, no more than 1,000 (mg/L) of sulfates calculated as sulfate ion.
   b. Water for Pre-stressed or Post-tensioned Concrete: Use water not containing more than 650 (mg/L) milligrams per liter of chlorides calculated as chloride ion, nor more than 800 (mg/l) of sulfates calculated as sulfate ion.

G. Conduit Encasement Coloring Agent:
1. Color: Red color concrete used for encasement of electrical ducts, conduits, and similar type items.
2. Manufacturers: One of the following or ENGINEER-approved equal.
   a. Frank D, Davis Company, Red Oxide Number 117.
   b. I. Reiss Company, Inc., equivalent product.
3. Conduit Encasement Concrete: Mix into each cubic yard of concrete 10 pounds of coloring agent.

H. Keyway Material: Lumber.

I. All curing compounds shall be white pigmented and resin based conforming to ASTM C309, Type D. Sodium silicate compounds shall not be allowed. Concrete curing compound shall be Kurez by Euclid Chemical Company; MB-429 as manufactured by Mater Builders; L&M Cure R; or ENGINEER-approved equal. Water based resin curing compounds shall be used only where local air quality regulations prohibit the use of a solvent based compound. Water based curing compounds shall be Aqua-Cure by Euclid Chemical Company; Masterkure-W by Master Builders; L&M Cure R-2; or ENGINEER-approved equal.

J. Manufacturers: One of the following or ENGINEER-approved equal.
1. WR Meadows
2. CGM Incorporated

K. Plastic Membrane Curing: Use polyethylene film.
1. Color: White
2. Thickness: Minimum 6 mils.
3. Loss of Moisture: Not to exceed 0.055 grams per square centimeter of surface when tested in accordance with ASTM C156.

2.02 CONCRETE DESIGN REQUIREMENTS

A. General: Concrete shall be composed of cement, admixtures, aggregates, and water of the qualities indicated. The exact proportions in which these materials are to be used for different parts of the work will be determined during the trial batch. In general, the mix shall be designed to produce a concrete capable of being deposited so as to obtain maximum density and minimum shrinkage, and, where deposited in forms, to have good consolidation properties and maximum smoothness of surface. The aggregate gradations shall be formulated to provide fresh concrete that will not promote rock pockets around reinforcing steel or embedded items. The proportions shall be changed whenever necessary or desirable to meet the required results at no additional cost to the OWNER. All changes shall be subject to review by the ENGINEER.

B. Fine Aggregate Composition: In mix designs for structural concrete, the percentage of fine aggregate in total aggregate by weight, shall be as indicated in the following table.

Fineness Modulus	**Maximum Percent**
2.7 or less	41
2.7 to 2.8	42
2.8 to 2.9	43
2.9 to 3.0	44

For other concrete, the maximum percentage of fine aggregate of total aggregate, by weight, shall not exceed 50.

C. Water-Cement Ratio and Compressive Strength: Concrete shall have the following minimum properties unless noted otherwise on the plans:

Type of Work	**Min 28-Day Compr. Strength (psi)**	**Max Size Aggregate (in)**	**Minimum Cement per cubic yard (lbs)**	**Non Air Max W/C Ratio (by weight)**
Structural	5,000	1	564	*
Concrete	4,500	1	564	0.38
	4,000	1	564	0.45
Pea Gravel Mix	4,000	3/8	752	0.40
Sitework Concrete	3,000	1	470	0.50
Lean Concrete	2,000	1	376	0.60

NOTES: W/C ration shall be based upon the Geotechnical Evaluation and or Soils Report - Refer to the Evaluation for W/C, and other site dependent concrete recommendations. See the Structural Plan notes for strength application and location.

The CONTRACTOR is cautioned that the limiting parameters above are not a mix design. Additional cement or water reducing agent may be required to achieve workability required by the CONTRACTOR's construction methods and aggregates. The CONTRACTOR is responsible for providing concrete with the required workability.

For strengths above 4500 psi (non-air) concrete proportions shall be established from either existing field data or trial mixes. This information shall be submitted by the ready mix company through the CONTRACTOR for review by the ENGINEER before it will be

approved. The average compressive strength from the test record must equal or exceed the ACI 318 requirements for average compressive strength.

D. Adjustments to Mix Design: The mixes shall be changed whenever such change is necessary or desirable to secure the required strength, density, workability, and surface finish, and the CONTRACTOR shall be entitled to no additional compensation because of such changes.

2.03 CONSISTENCY

A. The quantity of water in a batch of concrete shall be just sufficient, with a normal mixing period, to produce a concrete which can be worked properly into place without segregation and which can be compacted by vibratory methods to give the desired density, impermeability, and smoothness of surface. The quantity of water shall be changed as necessary, with variations in the nature or moisture content of the aggregates, to maintain uniform production of a desired consistency. The consistency of the concrete in successive batches shall be determined by slump tests in accordance with ASTM C143. The slumps shall be as follows:

Part of Work	**Slump (in)**
All concrete, unless indicated otherwise	3 inches plus or minus 1-inch
With high range water reducer added	7 inches plus or minus 2 inches
Pea gravel mix	7 inches plus or minus 2 inches
Ductbanks	5 inches plus or minus 1-inch

2.04 MIXES

A. Measurements of Materials:
   1. Measure materials by weighing, except as otherwise specified or where other methods are specifically authorized in writing by the ENGINEER.
   2. Furnish apparatus for weighing aggregates and cement that is suitably designed and constructed for this purpose.
   3. Accuracy of Weighing Devices: Furnish devices that have capability of providing successive quantities of individual material that can be measured to within one percent of desired amount of that material.
   4. Measuring or Weighing Devices: Subject to review by the ENGINEER, and bear valid seal of the Sealer of Weights and Measures having jurisdiction.
   5. Weighing Cement:
      a. Weigh cement separately.
      b. Cement in Unbroken Standard Packages (Sacks): Need not be weighed.
      c. Bulk Cement and Fractional Packages: Weigh such cement.
   6. Mixing Water: Measured by volume or by weight.

B. Concrete Proportions and Consistency:
   1. Concrete Consistency and Composition:
      a. Provide concrete that can be worked readily into corners and angles of forms and around reinforcement without excessive vibration and without permitting materials to segregate or free water to collect on surface.
      b. Prevent unnecessary or haphazard changes in consistency of concrete.
   2. Ratio of Coarse Aggregate to Fine Aggregate: Not less than 1.0 nor more than 2.0 for all concrete Classes, with exception of Class CE.
   3. Aggregate:

a. Obtain aggregate from source which is capable of providing uniform quality, moisture content, and grading during any single day's operation.

4. Concrete Mix Water to Cement Ratio, Cement Content, and Slump Range: Conform to values specified in Section 2.02.C and per the Geotechnical Evaluation.
5. Concrete Batch Weighs: Control and adjust so as to secure maximum yield, and at all times maintain proportions of concrete mix within specified limits.
6. Mixture Modification: If required, by the ENGINEER, modify mixture within limits set forth in this Section.

C. Concrete Mixes:
1. Proportioning of Concrete Mix: Proportion mixes on required average on compressive strength f'c as defined in the contract documents.
2. Mixes:
a. Adjusting of Water: After acceptance, do not change mixes without acceptance by ENGINEER, except that at all times adjust batching of water to compensate for free moisture content of fine aggregate.
b. Total Water Content of Each Concrete Class: Not exceed those specified in Section 2.02.C, unless noted otherwise or specified in the Geotechnical Evaluation and or Soils Report.
c. Checking Moisture Content of Fine Aggregate: Furnish satisfactory means at batching plant for checking moisture content of fine aggregate.
3. Change in Mixes: Undertake new trial batch and test program as specified in this Section.

D. Hand Mixed Concrete:
1. Hand mix concrete only when acceptable to the ENGINEER.
2. Prepare hand mixed concrete on watertight, level platform in batches not to exceed 1/3 cubic yard each.
3. Aggregate:
a. First spread required amount of coarse aggregate on platform in an even and uniform layer, and then over such aggregate spread proper proportion of fine aggregate.
b. Combined Depth of Both Such Layers: Not be greater than one foot.
4. Cement:
a. First evenly spread required quantity of cement over fine aggregate.
b. Then turn entire batch with shovels at least twice before adding water.
5. Water:
a. Then uniformly sprinkle or spray proper amount of water over batched materials.
b. Then turn with shovels not less than three times before being removing from platform.

2.05 SOURCE QUALITY CONTROL

A. Tests:
1. Concrete Mixes:
a. After concrete mixes have been accepted by ENGINEER, have trial batches of the accepted mix designs prepared by testing laboratory acceptable to the ENGINEER.
b. Prepare trial batches by using specified cement and aggregates proposed to be use for the work.

c. Trial Batches: Provide batches of sufficient quantity to determine slump, workability, consistency, and finishing characteristics, and to provide sufficient test cylinders.

d. Test Cylinders: Provide cylinders having six inch diameter by 12 inch length and that are prepared in accordance with ASTM C31 for tests specified in this Section.

e. Determine slump in accordance with ASTM C143.

f. Test Cylinders from Trial Batch:
   1) Test 8 cylinders for compressive strength in accordance with ASTM C39.
      a) Test 4 cylinders at 7 days and 4 at 28 days.
      b) Establish ratio between 7 day and 28 day strength for mix. Seven day strength may be taken as satisfactory indication of 28 day strength provided effects on concrete of temperature and humidity between 7 day and 28 day are taken into account.
   2) Average Compressive Strength of 4 Test Cylinders Tested at 28 Days: Equal to or greater than required average compressive strength f'c on which concrete mix design is based.

g. Drying Shrinkage:
   1) Prepare 5 drying shrinkage specimens in accordance with ASTM C157, except as modified herein.
   2) Remove drying shrinkage specimens from molds at age of 23 hours plus or minus 1 hour after trial batching, then immediately place them in water at 73°F plus or minus 3 degrees for at least 30 minutes and then measure specimens within 30 minutes thereafter to determine original length. Then submerge specimens in saturated lime water at 73°F plus or minus three degrees for moist curing.
   3) Make measurements to determine expansion expressed as percentage of original length at age 7 days. Use length at age 7 days as base length for drying shrinking calculations.
   4) Immediately store specimens in humidity controlled room maintained at 73°F plus or minus 3 degrees and 50 percent plus or minus 4 relative humidity for remainder of the test.
   5) Make and report measurements to determine shrinkage expressed as percentage of base length separately for 7, 14, 21, and 28 days of drying after 7 days of moist curing.
   6) Drying Shrinkage Deformation:
      a) Measure drying shrinkage deformation of each specimen as difference between base length and length after drying at each test age.
      b) Measure average drying shrinkage deformation of specimens to nearest 0.0001 inch at each test age.
      c) If drying shrinkage of any specimen departs from average of test age by more than 0.0004 inch, disregard results obtained from that specimen and test another specimen.
      d) Shrinkage of trial batch concrete at 28 days drying age shall not exceed 0.045 percent maximum.

h. If trial batch tests do not meet specified requirements for slump, strength, workability, consistency, drying shrinkage, and finishing, change concrete mix design proportions and, if necessary, source of aggregate. Make additional trial batches and tests until an acceptable trial batch is produced that meets requirements of this Section.

i. Perform test batches and tests required to establish trial batches and acceptability of materials without change in Contract Price.

j. Do not place concrete until the concrete mix design and trial batch have been accepted by ENGINEER.

2. Required Average Compressive Strength:
   a. Determine required average compressive strength (f'c) for selection of concrete proportions for mix design, for each class of concrete, using calculated standard deviation and its corresponding specified compressive strength f'c, in accordance with ACI 318, Part 3, Chapter 5.
   b. When test records of at least 30 consecutive tests that span period of not less that 45 calendar days are available, establish standard deviation as described in ACI 318, Part 3, Chapter 5 and as modified as follows herein.
   c. Provide test records from which to calculate standard deviation that represent materials, quality control procedures, and conditions similar to materials, quality control procedures, and conditions expected to apply in preparation of concrete for the Work.
   d. Provide changes in materials and proportions within test records that are more restricted than those for the Work.
   e. Specified Compressive Strength (f'c) of Concrete Used in Test Records: Within 1,000 pounds per square inch of that specified for the Work.
   f. When lacking adequate test records for calculation of standard deviation meeting requirements, determine required average compressive strength f'c from the following table.

Specified Compressive Strength f'c (pounds per square inch)	**Required Average Compressive Strength f'c (pounds per square inch)**
Less than 3,000	f'c + 1,000
3,000 to 5,000	f'c + 1,200
Over 5,000	f'c + 1,400

3. Pozzolan:
   a. Sampling and Testing:
      1) Sample and test pozzolan in accordance with ASTM C311.
      2) In Computing Water to Cement Ratio and Cement Content per Cubic Yard of Concrete: Consider cement weight to be weight of Portland cement plus 100 percent of weight of fly ash.
4. Aggregate:
   a. Testing of concrete aggregate is at CONTRACTOR's expense.
   b. Sieves:
      1) Use sieves with square openings for testing grading or aggregates.
      2) Sieve Analysis: If sieve analysis indicates significant change in materials, the ENGINEER may require that new mix design be submitted and accepted before further placing of concrete.
   c. Sample aggregate in accordance with ASTM D75 and C136.
   d. Fine Aggregate:
      1) Provide fine aggregate not containing strong alkali nor organic matter which gives color darker than standard color when tested in accordance with ASTM C40.
      2) Provide aggregate having soundness complying with requirements of ASTM C33 when tested in accordance with ASTM C88.

3) Provide aggregate complying with reactivity requirements of ASTM C33 when tested in accordance with ASTM C289.

e. Coarse Aggregate:
   1) Soundness when tested in accordance with ASTM C88: Have loss not greater than 10 percent when tested with sodium sulfate.
   2) Abrasion Loss: Not exceed 45 percent after 500 revolutions when tested in accordance with ASTM C131.
   3) Reactivity: Not exceed limits specified in Appendix of ASTM C33 when tested in accordance with ASTM C289.

f. Portland Cement:
   1) Determination Alkali Content: Determine by method set forth in ASTM C114.

PART 3 - EXECUTION

3.01 PROPORTIONING AND MIXING

A. Proportioning: Proportioning of the mix shall conform to the requirements of Chapter 3 "Proportioning" of ACI 301.

B. Mixing: Mixing shall conform to the requirements of Chapter 7 of said ACI 301 Specifications.

C. Slump: Slumps shall be as indicated herein.

D. Retempering: Retempering of concrete or mortar which has partially hardened shall not be permitted.

3.02 PREPARATION OF SURFACES FOR CONCRETING

A. General: Earth surfaces shall be thoroughly wetted by sprinkling prior to the placing of any concrete, and these surfaces shall be kept moist by frequent sprinkling up to the time of placing concrete thereon. The surface shall be free from standing water, mud and debris at the time of placing concrete.

B. Joints in Concrete: Concrete surfaces upon or against which concrete is to be placed, where the placement of the concrete has been stopped or interrupted so that, as determined by the ENGINEER, the new concrete cannot be incorporated integrally with that previously placed, are defined as construction joints. The surfaces of horizontal joints shall be given a compacted, roughened surface for good bonding. Except where the Drawings call for joint surfaces to be coated, the joint surfaces shall be cleaned of all laitance, loose or defective concrete, foreign material, and be roughened to a minimum ¼-inch amplitude. Such cleaning and roughening shall be accomplished by hydroblasting or sandblasting (exposing aggregate) followed by thorough washing. All pools of water shall be removed from the surface of construction joints before the new concrete is placed.

C. After the surfaces have been prepared, all approximately horizontal construction joints shall be covered with a 6-inch lift of a pea gravel mix. The mix shall be placed and spread uniformly. Wall concrete shall follow immediately and shall be placed upon the fresh pea gravel mix.

D. Placing Interruptions: When placing of concrete is to be interrupted long enough for the concrete to take a set, the working face shall be given a shape by the use of forms or other means, that will secure proper union with subsequent work; provided that construction joints shall be made only where acceptable to the ENGINEER.

E. Embedded Items: No concrete shall be placed until all formwork, installation of parts to be embedded, reinforcement steel, and preparation of surfaces involved in the placing

have been completed and accepted by the ENGINEER at least 4 hours before placement of concrete. All surfaces of forms and embedded items that have become encrusted with dried grout from previous work shall be cleaned before the surrounding or adjacent concrete is placed.

F. All inserts or other embedded items shall conform to the requirements herein.

G. All reinforcement, anchor bolts, sleeves, inserts, and similar items shall be set and secured in the forms at locations indicated on the Drawings or shown by shop drawings and shall be acceptable to the ENGINEER before any concrete is placed. Accuracy of placement is the responsibility of the CONTRACTOR.

H. Casting New Concrete Against Old: Where concrete is to be cast against old concrete (any concrete which is greater than 180 days of age), the surface of the old concrete shall be thoroughly cleaned and roughened by hydro-blasting or sandblasting (exposing aggregate). The joint surface shall be coated with an epoxy bonding agent unless indicated otherwise by the ENGINEER.

I. No concrete shall be placed in any structure until all water entering the space to be filled with concrete has been properly cut off or has been diverted by pipes, or other means, and carried out of the forms, clear of the WORK. No concrete shall be deposited underwater nor shall the CONTRACTOR allow still water to rise on any concrete until the concrete has attained its initial set. Water shall not be permitted to flow over the surface of any concrete in such manner and at such velocity as will injure the surface finish of the concrete. Pumping or other necessary dewatering operations for removing ground water, if required, shall be subject to the review of the ENGINEER.

J. Corrosion Protection: Pipe, conduit, dowels, and other ferrous items required to be embedded in concrete construction shall be so positioned and supported prior to placement of concrete that there will be a minimum of 2 inches clearance between said items and any part of the concrete reinforcement. Securing such items in position by wiring or welding them to the reinforcement will not be permitted.

K. Openings for pipes, inserts for pipe hangers and brackets, and anchors shall, where practicable, be provided during the placing of concrete.

L. Anchor bolts shall be accurately set and shall be maintained in position by templates while being embedded in concrete.

M. Cleaning: The surfaces of all metalwork to be in contact with concrete shall be thoroughly cleaned of all dirt, grease, loose scale and rust, grout, mortar, and other foreign substances immediately before the concrete is placed.

3.03 HANDLING, TRANSPORTING, AND PLACING

A. General: Placing of concrete shall conform to the applicable requirements of Chapter 8 of ACI 301 and the requirements of this Section. No aluminum materials shall be used in conveying any concrete.

B. Non-Conforming Work or Materials: Concrete which during or before placing is found not to conform to the requirements indicated herein shall be rejected and immediately removed from the work. Concrete which is not placed in accordance with these Specifications, or which is of inferior quality, shall be removed and replaced by the CONTRACTOR at no additional cost to the OWNER.

C. Unauthorized Placement: No concrete shall be placed except in the presence of a duly authorized representative of the ENGINEER. The CONTRACTOR shall notify the ENGINEER in writing at least 24 hours in advance of placement of any concrete.

D. Placement in Wall and Column Forms: Concrete shall not be dropped through reinforcement steel or into any deep form, nor shall concrete be placed in any form in

such a manner as to leave accumulation of mortar on the form surfaces above the placed concrete. In such cases, means such as hoppers and, if necessary, vertical ducts of canvas, rubber, or metal shall be used for placing concrete in the forms in a manner that it may reach the place of final deposit without separation. In no case shall the free fall of concrete exceed 4-feet in walls and 8-feet in columns below the ends of ducts, chutes, or buggies. Concrete shall be uniformly distributed during the process of depositing and in no case after depositing shall any portion be displaced in the forms more than 6-feet in horizontal direction. Concrete in wall forms shall be deposited in uniform horizontal layers not deeper than 2-feet; and care shall be taken to avoid inclined layers or inclined construction joints except where such are required for sloping members. Each layer shall be placed while the previous layer is still soft. The rate of placing concrete in wall forms shall not exceed 5-feet of vertical rise per hour. Sufficient illumination shall be provided in the interior of all forms so that the concrete at the places of deposit is visible from the deck or runway.

E. Casting New Concrete Against Old: Epoxy adhesive bonding agent shall be applied to the old surfaces according to the manufacturer's written recommendations. This provision shall not apply to joints where hydrotite waterstop is provided.

F. Conveyor Belts and Chutes: All ends of chutes, hopper gates, and all other points of concrete discharge throughout the CONTRACTOR'S conveying, hoisting, and placing system shall be designed and arranged so that concrete passing from them will not fall separated into whatever receptacle immediately receives it. Conveyor belts, if used, shall be of a type acceptable to the ENGINEER. Chutes longer than 50-feet will not be permitted. Minimum slopes of chutes shall be such that concrete of the indicated consistency will readily flow in them. If a conveyor belt is used, it shall be wiped clean by a device operated in such a manner that none of the mortar adhering to the belt will be wasted. All conveyor belts and chutes shall be covered.

G. Placement in Slabs: Concrete placed in sloping slabs shall proceed uniformly from the bottom of the slab to the top, for the full width of the placement. As the work progresses, the concrete shall be vibrated and carefully worked around the slab reinforcement, and the surface of the slab shall be screeded in an up-slope direction.

H. Temperature of Concrete: The temperature of concrete when it is being placed shall be not more than 90°F nor less than 55°F for s less than 12 inches thick nor less than 50°For all other sections. Concrete ingredients shall not be heated to a temperature higher than that necessary to keep the temperature of the mixed concrete, as placed, from falling below the minimum temperature. When the temperature of the concrete is 85°F or above, the time between the introduction of the cement to the aggregates and discharge shall not exceed 45 minutes. If concrete is placed when the weather is such that the temperature of the concrete would exceed 90°F, the CONTRACTOR shall employ effective means, such as pre-cooling of aggregates and mixing water using ice or placing at night, as necessary to maintain the temperature of the concrete, as it is placed, below 90°F. The CONTRACTOR shall not be entitled to any additional compensation on account of the foregoing requirements.

I. Cold Weather Placement:
   1. Placement of concrete shall conform to ACI 306.1 - Cold Weather Concreting, and the following.
   2. Remove all snow, ice, and frost from the surfaces, including reinforcement, against which concrete is to be placed. Before beginning concrete placement, thaw the subgrade to a minimum depth of 6 inches. All reinforcement and embedded items shall be warmed to above 32°F prior to concrete placement.
   3. Maintain the concrete temperature above 50°F for at least 5 days after placement.

3.04 PUMPING OF CONCRETE

A. General: If the pumped concrete does not produce satisfactory end results, the CONTRACTOR shall discontinue the pumping operation and proceed with the placing of concrete using conventional methods.

B. Pumping Equipment: The pumping equipment shall have two (2) cylinders and be designed to operate with one cylinder in case the other one is not functioning. In lieu of this requirement, the CONTRACTOR may have a standby pump on the site during pumping.

C. The minimum diameter of the hose conduits shall be in accordance with ACI 304.2R.

D. Pumping equipment and hose conduits that are not functioning properly shall be replaced.

E. Aluminum conduits for conveying the concrete shall not be permitted.

F. Field Control: Concrete samples for slump and test cylinders will be taken at the placement end of the hose.

3.05 ORDER OF PLACING CONCRETE

A. The order of placing concrete in all parts of the WORK shall be acceptable to the ENGINEER. In order to minimize the effects of shrinkage, the concrete shall be placed in units as bounded by construction joints at the indicated locations. The placing of units shall be done by placing alternate units in a manner such that each unit placed shall have cured at least 5-days for hydraulic structures and 2-days for all other structures before the contiguous unit or units are placed, except that the corner sections of vertical walls shall not be placed until the two (2) adjacent wall panels have cured at least 10 days for hydraulic structures and 4-days for all other structures.

B. The surface of the concrete shall be level whenever a run of concrete is stopped. To insure a level, straight joint on the exposed surface of walls, a wood strip at least ¾-inch thick shall be tacked to the forms on these surfaces. The concrete shall be carried about ½-inch above the underside of the strip. About one hour after the concrete is placed, the strip shall be removed and any irregularities in the edge formed by the strip shall be leveled with a trowel and all laitance shall be removed.

3.06 TAMPING AND VIBRATING

A. As concrete is placed in the forms or in excavations, it shall be thoroughly settled and compacted, throughout the entire depth of the layer which is being consolidated, into a dense, homogeneous mass, filling all corners and angles, thoroughly embedding the reinforcement, eliminating rock pockets, and bringing only a slight excess of water to the exposed surface of concrete. Vibrators shall be Group 3 per ACI 309, high speed power vibrators (8,000 to 12,000 rpm) of an immersion type in sufficient number and with at least one standby unit as required. Group 2 vibrators may be used only at specific locations when accepted by the ENGINEER.

B. Care shall be used in placing concrete around hydrotite waterstops. The concrete shall be carefully worked by rodding and vibrating to make sure that all air and rock pockets have been eliminated. Where flat-strip type hydrotite waterstops are placed horizontally, the concrete shall be worked under the hydrotite waterstops by hand, making sure that all air and rock pockets have been eliminated. Concrete surrounding the hydrotite waterstops shall be given additional vibration over and above that used for adjacent concrete placement to assure complete embedment of the hydrotite waterstops in the concrete.

C. Concrete in walls shall be internally vibrated and at the same time rammed, stirred or worked with suitable appliances, tamping bars, shovels or forked tools until it completely

fills the forms or excavations and closes snugly against all surfaces. Subsequent layers of concrete shall not be placed until the layers previously placed have been worked thoroughly. Vibrators shall be provided in sufficient numbers, with standby units as required, to accomplish the required results within 15 minutes after concrete of the prescribed consistency is placed in the forms. The vibrating head shall not contact the surfaces of the forms. Care shall be taken not to vibrate concrete excessively or to work it in any manner that causes segregation of its constituents.

3.07 FINISHING CONCRETE SURFACES

A. General: Surfaces shall be free from fins, bulges, ridges, offsets, honeycombing or roughness of any kind, and shall present a finished, smooth, continuous hard surface. Allowable deviations from plumb or level and from the alignment, profiles and dimensions shown are defined as tolerances and are indicated in Part 1, above. These tolerances are to be distinguished from irregularities in finish as described herein. Aluminum finishing tools shall not be used.

B. Formed Surfaces: No treatment is required after form removal except for curing, repair of defective concrete, and treatment of surface defects. Where architectural finish is required, it shall be as indicated. Surface holes larger than ½-inch in diameter or deeper than ¼-inch are defined as surface defects in basins and exposed walls and shall be patched per Section 3.11 Treatment of Surface Defects.

C. Unformed Surfaces: After proper and adequate vibration and tamping, all unformed top surfaces of slabs, floors, walls, and curbs shall be brought to a uniform surface with suitable tools. Immediately after the concrete has been screeded, it shall be treated with a liquid evaporation retardant. The retardant shall be used again after each work operation as necessary to prevent drying shrinkage cracks. The classes of finish specified for unformed concrete surfaces are designated and defined as follows:

1. Finish U1 - Sufficient leveling and screeding to produce an even, uniform surface with surface irregularities not to exceed 3/8-inch. No further special finish is required.
2. Finish U2 - After sufficient stiffening of the screeded concrete, surfaces shall be float finished with wood or metal floats or with a finishing machine using float blades. Excessive floating of surfaces while the concrete is plastic and dusting of dry cement and sand on the concrete surface to absorb excess moisture will not be permitted. Floating shall be the minimum necessary to produce a surface that is free from screed marks and is uniform in texture. Surface irregularities shall not exceed 1/4-inch. Joints and edges shall be tooled where indicated or as determined by the ENGINEER.
3. Finish U3 - After the finish U2 surface has hardened sufficiently to prevent excess of fine material from being drawn to the surface, steel troweling shall be performed with firm pressure such as will flatten the sandy texture of the floated surface and produce a dense, uniform surface free from blemishes, ripples, and trowel marks. The finish shall be smooth and free of all irregularities.
4. Finish U4 - Trowel the Finish U3 surface to remove local depressions or high points. In addition, the surface shall be given a light hairbroom finish with brooming perpendicular to drainage unless otherwise indicated. The resulting surface shall be rough enough to provide a nonskid finish.

D. Unformed surfaces shall be finished according to the following schedule:

UNFORMED SURFACE FINISH SCHEDULE

Area	**Finish**
Grade slabs and foundations to be covered with concrete or fill material	U1
Water bearing slabs with slopes 10 percent and less	U3
Water bearing slabs with slopes greater than 10 percent	U4

Slabs not water bearing	U4
Top surface of walls	U3

3.08 CURING

A. General: All concrete shall be cured for not less than 7 days after placing, in accordance with the methods indicated below for the different parts of the WORK.

Surface to be Cured or Damp proofed	**Method**
Wall sections with forms removed	1
Construction joints between footings and walls, and between floor slab and columns	2
Encasement concrete and thrust blocks	1 or 2
All concrete surfaces not specifically indicated in this paragraph	1
Floor slabs on grade in hydraulic structures	1 or 2
Slabs not on grade	1 or 2

B. Method 1: The surface shall be sprayed with a liquid white pigmented curing compound.
   1. It shall be applied in accordance with the manufacturer's printed instructions at a maximum coverage rate of 200 square feet per gallon and in such a manner as to cover the surface with a uniform film which will seal thoroughly.
   2. Where the curing compound method is used, care shall be exercised to avoid damage to the seal during the 7-day curing period. If the seal is damaged or broken before the expiration of the curing period, the break shall be repaired immediately by the application of additional curing compound over the damaged portion.
   3. Wherever curing compound has been applied by mistake to surfaces against which concrete subsequently is to be placed and to which it is to adhere, compound shall be entirely removed by wet sandblasting just prior to the placing of new concrete.
   4. Curing compound shall be applied as soon as the concrete has hardened enough to prevent marring on unformed surfaces and within 2 hours after removal of forms. Repairs to formed surfaces shall be made within the 2-hour period; provided, however, that any such repairs which cannot be made within the said 2-hour period shall be delayed until after the curing compound has been applied. When repairs are to be made to an area on which curing compound has been applied, the area involved shall first be wet-sandblasted to remove the curing compound.
   5. At all locations where concrete is placed adjacent to a panel which has been coated with curing compound, the panel shall have curing compound.

C. Method 2: This method applies to both walls and slabs.
   1. The concrete shall be kept continuously wet by the application of water for a minimum period of at least seven (7) consecutive days beginning immediately after the concrete has reached final set or forms have been removed.
   2. Until the concrete surface is covered with the curing medium, the entire surface shall be kept damp by applying water using nozzles that atomize the flow so that the surface is not marred or washed.
   3. Curing blankets shall be used as a curing medium to retain the moisture during the curing period. The curing medium shall be weighted or otherwise held substantially in contact with the concrete surface to prevent being dislodged by wind or any other causes. All edges shall be continuously held in place.
   4. The curing blankets and concrete shall be kept continuously wet by the use of sprinklers or other means both during and after normal working hours.

5. Immediately after the application of water has terminated at the end of the curing period, the curing medium shall be removed, any dry spots shall be rewetted and curing compound shall be immediately applied in accordance with Method 4 above.
6. The CONTRACTOR shall dispose of excess water from the curing operation to avoid damage to the work.

3.09 PROTECTION

A. The CONTRACTOR shall protect all concrete against injury until final acceptance at the CONTRACTOR's own expense and at no additional cost to the OWNER

B. Fresh concrete shall be protected from damage due to rain, hail, sleet, or snow. The CONTRACTOR shall provide such protection while the concrete is still plastic and whenever precipitation is imminent or occurring.

3.10 CURING IN COLD WEATHER

A. The CONTRACTOR shall protect all concrete against injury from cold weather until final acceptance at the CONTRACTOR's own expense and at no additional cost to the OWNER.

B. Concrete cured by an application of curing compound will require no additional protection from freezing if the protection at 50°F for 72 hours is obtained by means of approved insulation in contact with the forms or concrete surfaces; otherwise the concrete shall be protected against freezing temperatures for 72 hours immediately following 5 days protection at 50°F. Concrete cured by water shall be protected against freezing temperatures for 3 days immediately following the 72 hours of protection at 50°F.

C. Discontinuance of protection against freezing temperatures shall be such that the drop in temperature of any portion of the concrete will be gradual and will not exceed 40°F in 24 hours. In the spring, when the mean daily temperature rises above 40°F for more than three (3) successive days, the specified 72-hour protection at a temperature not lower than 50°F may be discontinued for as long as the mean daily temperature remains above 40°F; provided, that the concrete shall be protected against freezing temperatures for not less than 48 hours after placement.

D. Where artificial heat is employed, special care shall be taken to prevent the concrete from drying. Use of un-vented heaters will be permitted only when unformed surfaces of concrete adjacent to the heaters are protected for the first 24 hours from an excessive carbon dioxide atmosphere by application of curing compound; provided, that the use of curing compound for such surfaces is otherwise permitted by these Specifications.

3.11 TREATMENT OF SURFACE DEFECTS

A. As soon as forms are removed, all exposed surfaces shall be carefully examined and any irregularities shall be immediately patched or ground in a satisfactory manner in order to secure a smooth, uniform, and continuous surface. Plastering or coating of surfaces to be smoothed will not be permitted. No repairs shall be made until after inspection by the ENGINEER. In no case will extensive patching of honeycombed concrete be permitted. Concrete containing minor voids, holes, honeycombing, or similar depression defects shall be repaired as indicated below. Concrete containing extensive voids, holes, honeycombing, or similar depression defects shall be completely removed and replaced. All repairs and replacements herein required shall be promptly executed at no increased cost to the OWNER.

B. Defective surfaces to be repaired shall be cut back from true line a minimum depth of ½-inch over the entire area. Feathered edges will not be permitted. Where chipping or cutting tools are not required in order to deepen the area properly, the surface shall be

prepared for bonding by the removal of all laitance or soft material, plus not less than 1/32-inch depth of the surface film from all hard portions by means of an efficient sandblast. After cutting and sandblasting, the surface shall be wetted sufficiently in advance of shooting with shotcrete or with cement mortar so that while the repair material is being applied, the surfaces underneath will remain moist but not so wet as to overcome the suction upon which a good bond depends. The material used for repair proposed shall consist of a mixture of one sack of cement to 3-cubic feet of sand. For exposed walls, the cement shall contain such a proportion of Atlas white Portland cement as is required to make the color of the patch match the color of the surrounding concrete. In hydraulic structures the material used for repair shall be hydraulic cement as defined in this Section under Products.

C. Holes left by tie-rod cones shall be rubber stopped and grouted. Holes then shall be repaired in an approved manner with dry-packed cement grout. Holes left by form-tying devices having a rectangular cross-section and other imperfections having a depth greater than their least surface dimension shall not be reamed but shall be repaired in an approved manner with dry-packed cement grout.

D. All repairs shall be built up and shaped in such a manner that the completed work will conform to the requirements of this Section, as applicable, using approved methods which will not disturb the bond, cause sagging, or cause horizontal fractures. Surfaces of repairs shall receive the same kind and amount of curing treatment as required for the concrete in the repaired section.

E. Prior to filling any structure with water, all cracks that may have developed shall be "vee'd" as indicated in specs or in the field and filled with sealant conforming to the requirements of the applicable Sections of Division 03 – Concrete. This repair method shall be done on the water bearing face of members. Prior to backfilling, faces of members in contact with fill, which are not covered with a waterproofing membrane shall also have cracks repaired as indicated herein.

3.12 PATCHING HOLES IN CONCRETE

A. Patching Small Holes:
   1. Holes which are less than 12 inches in the least dimension and extend completely through concrete members shall be filled.
   2. Small holes in members which are water-bearing or in contact with soil or other fill material shall be filled with non-shrink grout or hydraulic cement in wet tanks. Where a face of the member is exposed to view, the non-shrink grout shall be held back 2 inches from the finished surface. The remaining 2 inches shall then be patched according to the Paragraph entitled "Treatment of Surface Defects."
   3. Small holes through all other concrete members shall be filled with non-shrink grout or hydraulic cement, with exposed faces treated as above.

B. Patching Large Holes:
   1. Holes which are larger than 12 inches in the least dimension shall have a keyway chipped into the edge of the opening all around, unless a formed keyway exists. The holes shall then be filled with concrete as indicated herein.
   2. Holes which are larger than 24 inches in the least dimension and which do not have reinforcing steel extending from the existing concrete, shall have reinforcing steel set in grout in drilled holes. The reinforcing added shall match the reinforcing in the existing wall unless indicated otherwise.
   3. Large holes in members which are water bearing or in contact with soil or other fill shall have a bentonite type hydrotite waterstop material placed around the perimeter of the hole in accordance with the applicable Sections of Division 03 – Concrete, unless there is an existing hydrotite waterstop in place.

3.13 CARE AND REPAIR OF CONCRETE

A. The CONTRACTOR shall protect all concrete against injury or damage from excessive heat, lack of moisture, over-stress, or any other cause until final acceptance. Particular care shall be taken to prevent the drying of concrete and to avoid roughening or otherwise damaging the surface. Any concrete found to be damaged, or which may have been originally defective, or which becomes defective at any time prior to the final acceptance of the completed WORK, or which departs from the established line or grade, or which, for any other reason, does not conform to the requirements of the Contract Documents, shall be satisfactorily repaired or removed and replaced with acceptable concrete at no additional cost to the OWNER.

END OF SECTION

SECTION 03 4100 – PRECAST CONCRETE UTILITY STRUCTURES

PART 1 – GENERAL

1.01 THE REQUIREMENT

A. The CONTRACTOR shall furnish and install structural pre-cast concrete work in accordance with the Contract Documents.

B. This Section covers the design, fabrication, delivery, and installation of all pre-cast concrete units, including connections, complete, in place, as shown and specified.

C. American Iron and Steel (AIS) requirement applies to this section. All iron and steel products used in this project must be produced in the United States.

D. Soils Report: This work shall conform to the requirements of the latest Geotechnical Evaluation and / or Soils Report.

1.02 CODES AND STANDARDS

A. Referenced Documents:

1. ASTM Standards:

A82	Steel Wire, Plain, for Concrete Reinforcement
A184	Fabricated Deformed Steel Bar Mats for Concrete Reinforcement
A185	Steel Welded Wire, Fabric, Plain, for Concrete Reinforcement
A496	Steel Wire, Deformed, for Concrete Reinforcement
A497	Welded Deformed Steel Wire Fabric for Concrete Reinforcement
A615	Deformed and Plain Billet-Steel Bars for Concrete Reinforcement
A616	Rail-Steel Deformed and Plain Bars for Concrete Reinforcement
A617	Axle-Steel Deformed and Plain Bars for Concrete Reinforcement
A706	Low-Alloy Steel Deformed Bars for Concrete Reinforcement
C31	Making and Curing Concrete Test Specimens in the Field
C33	Concrete Aggregates
C39	Compressive Strength of Cylindrical Concrete Specimens
C42	Obtaining and Testing Drilled Cores and Sawed Beams of Concrete
C94	Ready-Mixed Concrete
C150	Portland Cement
C192	Making and Curing Concrete Test Specimens in the Laboratory
C231	Air Content of Freshly Mixed Concrete by the Pressure Method
C260	Air-Entraining Admixtures for Concrete
C330	Lightweight Aggregates for Structural Concrete
C478	Precast Reinforcement Concrete Manhole Sections
C494	Shear Fatigue of Sandwich Core Materials
C595	Blended Hydraulic Cements
C618	Coal Fly Ash and Raw or Calcined Natural Pozzolan for Use as a Mineral Admixture in Concrete
C857	Minimum Structural Design Loading for Underground Precast Concrete Utility Structures

2. American Concrete Institute Standards:
   a. ACI 318 Building Code Requirements for Reinforced Concrete
3. American Welding Society Standards:
   a. AWS-D1.4 Structural Welding Code Reinforcing Steel

1.03 SUBMITTALS

A. Submittals shall be made in accordance with Section 01 3300 – Submittal Procedures.

B. Shop Drawings:
   1. Shop drawings shall show structure dimensions and orientation and location of all applicable inflow and outflow penetrations, access hatches, and conduit sleeves.
   2. Shop drawings shall include design structural calculations, assuming the applicable seismic zone and project groundwater conditions, that are stamped and signed by a Professional Engineer registered in Arizona and shall be approved by the ENGINEER.
   3. Shop drawings shall indicate pre-cast unit identification marks, location of units in the WORK, elevations, fabrication details, joint details, reinforcement, connections, dimensions, interface with adjacent members, and special handling instructions in sufficient detail to cover manufacture, handling and erection. Shop drawings shall include erection drawings.

C. Test Reports: Tests for compressive strength of concrete shall be performed by the factory. Copies of test reports including all test data and all test results shall be submitted.

D. Certificates of Compliance: Certificates of compliance shall be submitted attesting that materials and products meet or exceed specified requirements.

1.04 QUALITY ASSURANCE

A. General Requirements: Design members under direct supervision of a Professional Engineer experienced in design of pre-cast concrete units, registered in the State of Arizona, and conforming to requirements of this specification.
   1. Manufacture, Transportation, and Installation: The Manufacturer shall specialize in providing pre-cast products and services normally associated with pre-cast concrete construction with high quality finishes similar to that indicated on drawings.

1.05 DELIVERY, STORAGE, AND HANDLING

A. General: Pre-cast members shall be handled to position consistent with their shape and design; they shall be lifted and supported from design incorporated support points and provided with strong backs and other devices as required. Lifting or handling equipment shall be capable of maintaining units during manufacture, storage, transportation, erection, and in position for fastening.

B. Blocking and supports, lateral restraints and protective materials during transport and storage shall be clean, non-staining, without causing harm to exposed surfaces, including temporary support to prevent bowing and warping. Lateral restraints shall be provided to prevent undesirable horizontal movement. Edges and exposed faces of members shall be protected to prevent straining, chipping, or spalling of concrete.

C. Units shall be marked with date of production and final position in structure in location not visible after erection.

D. Pre-cast units shall be stored off the ground in a manner to prevent warpage and they shall be protected from weather, marring, and overload.

E. Stainless Steel Hardware: Stainless steel hardware shall be transported, handled, stored, and protected in wood crates.

PART 2 – PRODUCTS

2.01 MATERIALS

A. Cement: ASTM C150 or ASTM C595.

B. Aggregates: ASTM C33 and ASTM C330, except that the requirements for grading shall not apply.

C. Admixtures: May be used provided such admixtures are not injurious to other products used in the concrete.

D. Chemical Admixtures: ASTM C494

E. Fly Ash and Pozzolanic Admixture: ASTM C618
   1. Water: Used for curing, washing, aggregate, or mixing concrete shall be clean and free of injurious amounts of oil, acids, alkalis, salts, organic materials, or other substances that may be incompatible with concrete or steel.

F. Steel Reinforcement:
   1. Wire ASTM A82 or ASTM A496
   2. Wire Fabric ASTM A185 or ASTM A497
   3. Bars ASTM A184, ASTM A615, ASTM A616, ASTM A617 or ASTM A706

2.02 DESIGN REQUIREMENTS

A. Design Method: The elastic method of structural design or the ultimate strength method of reinforced concrete design as outlined in ACI 318 shall be used to design the concrete sections, including the reinforcement required, when the structure is subjected to the loading conditions covered in Practice C857.

B. Access Openings: The structural design shall take into consideration the number, placement, and size of access openings.

C. Floors: The minimum floor thickness resulting from slope shall be considered as nominal floor thickness in the structure.

D. Terminators, Knockouts and Sumps: Duct terminators, knockouts and sumps shall be designed to carry the loads imposed upon them. The basic structure shall be designed to carry all imposed loads with knockouts removed.

E. Placement of Reinforcement: The design concrete cover for reinforcing bars, mats or fabric shall not be less than ¾-inch (19 mm) subject to the requirements of Section 2.2.

F. Concrete Strength: The minimum specified compressive strength for design shall be 4,000 psi (21 MPa) at 28 days of age. Compressive-strength tests should be made in accordance with Practices C31 and C192 and Test Methods C39 and C42.

G. Joints: Joints in sectional precast concrete structure shall be designed so as to be self-aligning when assembling sections of the structure.
   1. The manufacture shall provide a single joint design on all units of the same size and type to ensure interchangeability.

H. Lifting Devices: Design of embedded lifting devices shall conform to requirements as specified in 8.4 under Special Loading Considerations of Practice ASTM C890.

I. Pickup Points and Boxouts: Pickup points, boxouts and inserts on panel faces and surfaces to be exposed are prohibited except as approved.

J. Traffic Loads: Structure and access hatches shall be designed for HS-20-44 traffic wheel loads per AASHTO as last revised, including a 30% impact factor.

2.03 MANUFACTURE

A. Forms: Forms shall be accurately constructed and strong enough to maintain the structure's dimensions within the tolerances given in Section 2.4. Forms should be constructed in such a manner as to minimize the seepage of water. All casting surfaces shall be smooth nonporous material.

B. Cleaning and Oiling: Forms shall be cleaned before each use. New forms shall be free of paint or other protective coatings that might cling to the surface of the structure. Releasing agents applied to the form to aid in breaking the bond between the form and the concrete shall not be injurious to the concrete.

C. Reinforcement: Steel reinforcement shall conform to the requirements of this specification and shall be securely positioned in the form to maintain design concrete cover given in Section 2.2 during concrete placement. All chairs, bolsters, braces and spacers in contact with form and reinforcing rod shall be of material that will not deteriorate.

D. Mixture: The aggregates shall be sized, graded, proportioned, and thoroughly mixed in a batch mixer with proportions of cement and water as will produce a homogeneous concrete having the required specified compressive strength. If Ready-Mix concrete is used, it shall be in accordance with Specification C 94.

E. Concrete Placement: Concrete shall be deposited as nearly as practicable in its final position. Concrete shall be placed in the form at a rate such that the concrete is plastic at all times and flows readily into all parts of the form and around all reinforcement steel and embedded fixtures without segregation of materials. Concrete that has partially hardened or has been contaminated by foreign material shall not be deposited in the form.

F. Curing: Structures shall be cured by an accepted industry method that will develop the required 28-day compressive strength without affecting the long-term durability of the concrete.

2.04 PERMISSIBILE VARIATIONS

A. Dimensional Tolerances: The length, width, height, or diameter measurements of the structure when measured on the inside surface shall not deviate from the design dimensions more than the following:

Dimension	**Tolerance**
0 to 5-feet (0 to 1.5 m)	+/- 1/4 inch (+/- 6 mm)
5 to 10-feet (1.5 to 3.0 m)	+/- 3/8 inch (+/- 10 mm)
10 to 20 feet (3.0 to 6.1 m)	+/- 1/2 inch (+/- 13 mm)
20 feet (6.1 m) and over	as agreed upon between manufacturer and purchaser

B. Squareness Tolerance: The inside of the precast concrete component shall be square as determined by diagonal measurements. The difference between such measurements shall not exceed the following:

Measured Length	**Allowable Difference**
0 to 10 feet (0 to 0.3 m)	+/- 1/2 inch (+/- 13 mm)
10 to 20 feet (3.0 to 6.1 m)	+/- 3/4 inch (+/- 19 mm)
20 feet (6.1 m) and over	as agreed upon between manufacturer and purchaser

C. Joint Surfaces: The inside joint seam gap between two sections placed together without a joint sealant shall not exceed 3/8-inch (9.5 mm).

D. Insert Location: Insert locations for attachments in each component shall not deviate individually or cumulatively more than ± 1/8-inch (3.18 mm) from dimensions on specification drawings.

E. Reinforcement Location: With reference to thickness of wall or slab, reinforcement shall be within ± ¼-inch (6.3 mm) of the design location, but in no case shall the cover be less than ¾-inch (19 mm). The reinforcement spacing shall not vary more than one tenth of the designed bar spacing nor exceed 1½-inch (38 mm) in variation, except for welded wire mesh which shall conform to Specifications A185 or A497.

F. Slab and Wall Thickness: The slab and wall thickness shall not be less than that shown in the design by more than 5% or 3/16-inch (4.8 mm), whichever is greater. A thickness greater than that required in the design shall not be a cause for rejection.

2.05 REPAIRS

A. Precast concrete structures may be repaired. Repairs shall be performed by the manufacturer, in such a manner as to ensure that the repaired structure conforms to the requirements of this specification.

2.06 INSPECTION

A. The quality of material, process of manufacture, and the finished structure shall be subject to inspection at any time by the purchaser or his representative.

2.07 REJECTION

A. Precast concrete structures or sections of structures shall be subject to rejection upon failure to conform to any specified requirements contained herein, or if any of the following imperfections occur:
   1. Defects that indicate any imperfect concrete mixing and molding, or
   2. Surface defects indicated by honeycombed or open-texture and damaged areas where such defects would affect the structural adequacy.

2.08 CERTIFICATION

A. At the request of the purchaser, the manufacturer shall, prior to the actual delivery of a structure, furnish a statement giving the source and type of cement, the source and specific gravities of the aggregates, the concrete mix proportions, strength, type, amount, and name of admixtures and mill certificates for the reinforcement steel used in manufacture.

2.09 MARKING

A. The weight shall be marked on the outside of each component section.

B. The purchaser may request additional information to be marked on the component section when ordering.

C. The method of marking shall be agreed upon between the purchaser and the supplier prior to ordering.

PART 3 – EXECUTION

3.01 INSTALLATION

A. Erection:
   1. The units shall be erected in accordance with approved shop/erection drawings without damage to shape or finish or adjacent work. Unless otherwise shown, members shall be erected level and plumb within allowable tolerances.
   2. The CONTRACTOR shall align and maintain uniform horizontal joints as erection progresses, provide approved shims and wedges as required, and when members required adjustment beyond design or tolerance criteria, discontinue affected work. Units shall be secured in place and field welds; scratches and otherwise damaged steel surfaces shall be touched up.
   3. Pickup points, boxouts, inserts and bearing surfaces shown shall be grouted with non-shrink grout in accordance with these Specifications. The color and texture of concrete surfaces of adjacent areas shall be finished to match in the same plane.

3.02 PROTECTION

A. Adjacent surfaces shall be protected from damage during sealing and cleaning operations and against damage, disfiguration, or discoloration from subsequent operations. Noncombustible shielding shall be used during welding operations.

END OF SECTION

SECTION 03 6000 – GROUTING

PART 1 - GENERAL

1.01 THE REQUIREMENT

A. Provide and place grout in accordance with the Contract Documents.

B. Section Includes:
   1. Concrete Mortar
   2. Grout
   3. Dry-pack Mortar
   4. Non-shrink Grout
   5. Epoxy grout
   6. Non-shrink epoxy grout

C. Refer to the applicable Sections of Division 03 – Concrete.

1.02 REFERENCES

A. American Society for Testing and Materials (ASTM):

C109	Compressive Strength of Hydraulic Cement Mortars (using 2 inch or 50 millimeter cube specimens)
C230	Flow Table for Use in Tests of Hydraulic Cement
C531	Liner Shrinkage and Coefficient of Thermal Expansion of Chemical-Resistant Mortars, Grouts, Monolithic Surfacing and Polymer Concretes
C579	Compressive Strength of Chemical-Resistant Mortars and Monolithic Surfacing
C827	Change in Height at Early Ages of Cylindrical Specimens from Cementitious Mixtures
C939	Flow of Grout for Preplaced-Aggregate Concrete (Flow Cone Method)
C1090	Measuring Change in Height of Cylindrical Specimens from Hydraulic-Cement Grout
C1107	Packaged Dry, Hydraulic-Cement Grout (non-shrink)
C1181	Compressive Creep of Chemical-Resistant Polymer Machinery Grouts

1.03 SUBMITTALS

A. Furnish submittals in accordance with Section 01 3300 – Submittal Procedures.

B. Grout: Submit manufacturer's Literature and certified test data prior to installation of any grout mixes.

1.04 DELIVERY, STORAGE, AND HANDLING

A. All materials shall be delivered to the jobsite in their original, unopened packages or containers, clearly labeled with the manufacturer's product identification and printed instructions.

B. All materials shall be stored in a cool dry place and in accordance with the manufacturer's recommendations.

C. All materials shall be handled in accordance with the manufacturer's instructions.

1.05 PROJECT/SITE CONDITIONS

A. Refer to manufacturer's literature or contact the manufacturer for any special physical or environmental limitations that may be required for use of products.

1.06 WARRANTIES

A. Non-shrink Grout: The manufacturer shall warranty that the non-shrink grout will never go below its initial placement volume when tested in accordance with ASTM C1107.

B. Non-shrink Epoxy Grout: The manufacturer shall warranty that the non-shrink epoxy grout will show negligible shrinkage or expansion when tested in accordance with ASTM C531.

PART 2 - PRODUCTS

2.01 MATERIALS

A. Concrete Mortar:
   1. General: Consist of concrete mixture with coarse aggregate removed and water quantity adjusted as required.
   2. At Exposed Concrete Surfaces Not to Be Painted or Submerged in Water: White Cement.

B. Grout: Consist of mixture of Portland cement and sand.

C. Dry-pack:
   1. Mortar consists of mixture of Portland cement and sand.
   2. Hydraulic Cement Manufacturers
      a. Aqua Plug
      b. Unitex Hydraulic Cement
      c. Thoro Water Plug

D. Non-shrink Grout:
   1. Manufacturers: One of the following or ENGINEER-approved equal:
      a. Five Star Products, Inc., Fairfield, CT, Five Star Grout.
      b. Master Builders, Inc., Cleveland, OH, Masterflow 928.
      c. L&M Construction Chemicals, Inc., Omaha, NE, CRYSTEX
   2. Non-shrink grout shall be a proportioned and prepackaged cement-based mixture. It shall contain no metallic particles such as aluminum powder and no metallic aggregate such as iron filings. It shall require only the addition of potable water.
   3. Potable water for pre-soaking, mixing, and curing shall be clean and free of oils, acids, alkalis, organics, and any other deleterious matter.
   4. Bleeding: Non-shrink grout shall be free from the emergence of mixing water from within or the presence of water on its surface.
   5. Non-shrink grout shall be in accordance with ASTM C1107.
   6. Consistency: Non-shrink grout shall remain at a minimum flowable consistency for at least 45 minutes after mixing at 45°F to 90°F when tested in accordance with ASTM C230. If at a fluid consistency, it shall be verified in accordance with ASTM C939.
   7. Dimensional Stability (height change): Non-shrink grout shall be in accordance with ASTM C1107, volume-adjusting Grade B or C at 45°F to 90°F. It shall show 90 percent or greater bearing area under bases or baseplates.
   8. Compressive Strength: Non-shrink grout shall show minimum compressive strengths at 45°F to 90°F in accordance with ASTM C1107 for various periods from the time of placement, including 5,000 pounds per square inch at 28 days when tested in accordance with ASTM C109 as modified by C1107.

E. Epoxy Grout:
   1. Consist of mixture of epoxy and sand.
   2. Sand: Clean, bagged, graded, and kiln dried silica sand.

F. Non-shrink Epoxy Grout:
   1. Manufacturers: One of the following or equal:
      a. Five Star Products, Inc., Fairfield, CT, Five Star Epoxy Grout.
      b. Master Builders, Inc., Cleveland, OH, Masterflow 648 CP Plus.
      c. L&M Construction Chemicals, Inc., Omaha, NE, EPOGROUT.

2. Non-shrink epoxy grout shall be a 100-percent-solids, pre-measured, prepackaged system containing a two-component thermosetting epoxy resin and inert aggregate
3. Consistency: Non-shrink epoxy grout shall maintain a flowable consistency for at least 45 minutes at 70°F.
4. Dimensional Stability (height change):
   a. Non-shrink epoxy grout shall have negligible shrinkage or expansion (less than 0.0006 in/in) when tested in accordance with ASTM C531.
5. Compressive Strength: Non-shrink epoxy grout shall show a minimum compressive strength of 10,000 pounds per square inch at 24 hours and 14,000 pounds per square inch at 7 days when tested in accordance with ASTM C579, Method B.
6. Compressive Creep: The compressive creep for non-shrink epoxy grout shall not exceed 0.0027 in/in when tested under a 400 pounds per square inch constant load at 140 degrees Fahrenheit in accordance with ASTM C1181.
7. Thermal Capability: The coefficient of thermal expansion for non-shrink epoxy grout shall not exceed 0.000018 inches per inch per degree Fahrenheit when tested under ASTM C531, Method B.

2.02 MIXES

A. Concrete Mortar Mix:
   1. Use water-cement ratio that is no more than that specified for concrete being repaired.
   2. At Exposed Concrete Surfaces Not to Be Painted or Submerged in Water: Use sufficient white cement to make color of finished patch match that of surrounding concrete.

B. Grout Mix:
   1. For Concrete Repair: Mix in same proportions used for concrete being repaired, with only sufficient water to give required consistency for spreading.
   2. For Spreading over the Surfaces of Construction or Cold Joints: Mix with no more water used than allowed by water-cement ratio specified for concrete.
   3. For Other Applications: Mix in proportions by weight of one part cement to four parts of concrete sand.

C. Dry-pack Mortar and Hydraulic Cement Mix: Use only enough water so that resulting mortar will crumble to touch after being formed into a ball by hand.

D. Non-shrink Grout: Mix in accordance with manufacturer's installation instructions such that resulting mix has fluid or flowable consistency and is suitable for placing by pouring.

E. Epoxy grout: Mix in accordance with manufacturer's installation instructions for mixing.

F. Non-shrink Epoxy Grout: Mix in accordance with manufacturer's installation instructions.

PART 3 - EXECUTION

3.01 EXAMINATION

A. Inspect concrete surfaces to receive grout or mortar and verify that they are free of ice, frost, dirt, grease, oil, curing compounds, paints, impregnations and all loose material or foreign matter likely to affect the bond or performance of grout or mortar.

B. Inspect baseplate and anchor systems for rust, oil, and other deleterious substances that may affect the bond or performance of grout.

C. Confirm that newly placed concrete has been cured sufficiently to attain its design strength and limit further shrinkage.

D. Verify that temperature of cementitious or epoxy grout does not exceed manufacturer's recommendations.

3.02 PREPARATION

A. Surface Preparation:
   1. Roughen all concrete surfaces by heavy sandblasting, chipping, or other mechanical means to assure bond. Loose or broken concrete shall be removed.
   2. All grease, oil, dirt, curing compounds, laitance, and other deleterious materials that may affect bond that were identified in the inspection process shall be completely removed from concrete and bottoms of baseplates. All metal surfaces should have a 2- to 3-mil peak-to-valley profile for epoxy grouts.
   3. For cementitious mortars and grouts, concrete surfaces shall be saturated surface dry. Any standing water shall be removed prior to placing grouts.
   4. For epoxy grouts, do not wet concrete surfaces with water. Instead, where required, wet surfaces with epoxy for horizontal work or epoxy gel for vertical or overhead work prior to placing epoxy grouts.

B. Forms and Headboxes for Grouts (Cementitious or Epoxy):
   1. Forms for grouts shall be built of material with adequate strength to withstand the placement of grouts.
   2. Forms must be rigid and liquid tight. All cracks and joints shall be caulked with an elastomeric sealant. All forms shall be lined with polyethylene for easy grout release. Forms carefully waxed with two coats of heavy-duty paste wax shall also be acceptable.
   3. Forms shall be 4 to 6 inches higher than the baseplate on one side of the baseplate configuration when using head pressure for placement.
   4. A sufficient number of headboxes shall be built to facilitate placement of grouts.
   5. Air relief holes a minimum 1/8 inch in diameter shall be provided when required by a baseplate configuration to avoid entrapping air underneath.

3.03 APPLICATION

A. Cement Mortar and Grout:
   1. For Defective Concrete Repair:
      a. Filling: Filling of voids around items through the concrete.
      b. Grout Spreading: Spread over construction joints, cold joints, and similar type items.
   2. Concrete Surfaces: Apply epoxy bonding agent to clean, roughened, and dry surfaces before placing mortar or grout.
   3. Placing:
      a. Exercise particular care in placing Portland cement mortar or grout since they are both required to furnish structural strength or impermeable water seal or both.
      b. Do not use cement mortar or grout that has not been placed within 30 minutes after mixing.

B. Epoxy Grout:
   1. Apply in accordance with manufacturer's installation instructions.
   2. Use where specified herein or where indicated on the Drawings.

3.04 PLACEMENT

A. The CONTRACTOR shall arrange to have a grout manufacturer's representative present for a preconstruction meeting and during the initial grout placement. Grout shall only be installed after the final equipment alignment is correct and accepted by the ENGINEER.
   1. Grouts shall be mixed in accordance with the manufacturer's recommendations.

2. A mortar mixer with moving paddles shall be used for mixing grouts. For cementitious grouts, pre-wet the mixer and empty out excess water before beginning mixing.
3. Cementitious Grouts:
    a. Non-shrink cementitious grout shall be added to a pre-measured amount of water that does not exceed the manufacturer's maximum recommended water content.
    b. Mix cementitious grouts per manufacturer's instructions for uniform consistency.
    c. Grouts may be dry packed, flowed, or pumped into place. All baseplate grouting shall take place from one side of a baseplate to the other to avoid trapping air. Do not overwork grouts.
    d. Do not retemper grout by adding more water after stiffening.
    e. Hydrostatic head pressure shall be maintained by keeping the level of the grout in the headbox above the bottom of the baseplate. The headbox should be filled to maximum level and the grout worked down to top of baseplate.
4. Epoxy Grouts:
    a. Epoxy grouts shall be mixed in complete units. Do not vary the ratio if components or add solvent to change the consistency of the mix.
    b. Pour the hardener into the resin and mix for at least one minute and until each mixture is uniform in color. Pour the chemical components into the mortar mixer wheelbarrow and add the aggregate. Mix until aggregate is uniformly wetted. Overmixing will cause air entrapment in the mix.
    c. All epoxy grout shall be flowed into place using a headbox. All grouting shall take place from one side of a baseplate to the other in a continuous flow to avoid trapping air.
    d. Hydrostatic head pressure shall be maintained by keeping the level of grout in headboxes above the bottom of baseplates. Headboxes shall be filled to the maximum level and grout worked down to the bottom of the baseplates.
    e. Epoxy grouts shall not be cut back after setting. The final level of grout will be as installed with all chamfer edges built into the formwork.

3.05 CURING

A. Cementitious Grouts:
1. Grouts must be cut back to the lower edge of baseplates after reaching initial set. Provide a 45 degree angle cut back.
2. Clean equipment and tools as recommended by the grout manufacturer.
3. Cure Grouts in accordance with the manufacturer's specifications and recommendations. Keep grout moist for a minimum of 3 days. The method needed to protect grouts will depend on temperature, humidity, and wind. Wet burlap, a soaker hose, sun shading, ponding and in extreme conditions, a combination of methods shall be employed.
4. Grouts shall be maintained above 40°F until they have attained a compressive strength of 3,000 pounds per square inch or above 70°F for a minimum of 24 hours to avoid damage from subsequent freezing.

B. Epoxy Grouts:
1. Cure grouts in accordance with manufacturer's specifications and recommendations. Do not wet cure epoxy grouts.
2. Consult the manufacturer for appropriate cure schedule. In no case should any surface in contact with grout be allowed to fall below 50°F for a minimum of 48 hours after placement.
3. Equipment and tools shall be cleaned immediately with a strong liquid detergent and water solution before grout hardens.

3.06 FIELD QUALITY CONTROL

A. Non-shrink grouts shall be tested for 84 hour compressive strength in accordance with ASTM C109.

B. Non-shrink grouts shall be tested for 24 hour compressive strength in accordance with ASTM C579 (Method B).

END OF SECTION

SECTION 03 6423
EPOXY INJECTION GROUTING

PART 1 – GENERAL

1.01 SUMMARY

A. Section Includes: Epoxy injection system.

1.02 REFERENCES

A. American Society for Testing and Materials (ASTM):
   D638 Tensile Properties of Plastics.
   D695 Compressive Properties of Rigid Plastics.
   D790 Flexural Properties of Unreinforced and Reinforced Plastics and Electrical Insulating Materials

1.03 SUBMITTALS

A. Furnish submittals in accordance with Section 01 3300 – Submittal Procedures.

B. Product Data: Submit manufacturer's data completely describing epoxy injection system materials.

C. Quality Control Submittals:
   1. Certificates of Compliance
   2. Manufacturer's Instructions

PART 2 – PRODUCTS

2.01 MATERIALS

A. Manufacturers: One of the following or ENGINEER-approved equal:
   1. Master Builders, Inc., Concressive Standard LVI
   2. Sika Chemical Corp.'s, Sikadur 35, Hi-Mod LV

B. Epoxy: Provide epoxy materials that are new and use them within shelf life limitations set forth by manufacturer. Water-insensitive, 2-part type, low viscosity epoxy adhesive material containing 100 percent solids and meeting or exceeding following characteristics when tested in accordance with standards specified:

Physical Characteristic	**Test Method**	**Required Results**
Tensile Strength	ASTM D638	8,000 pounds per square inch at 14 days and 77°F cure
Flexure Strength	ASTM D790	11,000 pounds per square inch at 14 days and 77°F cure
Compressive Strength	ASTM D695	16,000 pounds per square inch at 24 hours and 77°F cure
Physical Characteristic	Test Method	Required Results
Bond Strength	--	Concrete shall fail before failure of epoxy
Gel Time in 5-Mil Film	--	Four hours maximum at 77°F
Elongation	ASTM D638	1 percent at 14 days and 77°F

2.02 EQUIPMENT

A. Pump Unit:
   1. Furnish unit to be used for injection that is positive displacement type with interlock to provide in-line mixing and metering system for 2-component epoxy.
   2. Furnish pressure hoses and injection nozzle of such design as to allow proper mixing of 2 components of epoxy.
   3. Presence of standby injection unit may be required.

2.03 MIXES

A. Epoxy Injection System Materials:
   1. Mix epoxy in accordance with manufacturer's installation instructions.
   2. Do not use solvents to thin epoxy system materials introduced into cracks or joints.

PART 3 – EXECUTION

3.01 PREPARATION

A. Surface Preparation:
   1. Epoxy Injection System:
      a. General: Before processing, sweep or clean area in vicinity of crack location to receive epoxy and leave in generally clean condition.
      b. Joints to Receive Epoxy: Clean in manner such that joints are free from dirt, laitance, and other loose matter.

3.02 INSTALLATION

A. Install and cure epoxy materials in accordance with manufacturer's installation instructions.

B. Perform and conduct work of this Section in neat orderly manner.

C. Epoxy Injection System:
   1. Apply adequate surface seal to crack or joint to prevent escape of epoxy.
   2. Establish entry points at distance along seal not less than thickness of cracked member.
   3. Force epoxy into crack at first port with sufficient pressure to advance epoxy to adjacent port.
   4. Seal original port and shift entry to port at which epoxy appears.
   5. Continue this manner of port-to-port injection until each joint has been injected for its entire length.
   6. For small amounts, or where excessive grout pressure developed by pump unit might further damage structure, premixed material and hand caulking gun may be used if acceptable to the ENGINEER.
   7. Seal ports, including adjacent locations where epoxy seepage occurs, as necessary to prevent drips or run out

END OF SECTION

SECTION 04 2200 – CONCRETE UNIT MASONRY

PART 1 – GENERAL

1.01 THE REQUIREMENT

A. Provide concrete masonry and other appurtenant work, complete and in place, in accordance with the Contract Documents.

1.02 REFERENCE SPECIFICATIONS, CODES AND STANDARDS

A. Commercial Standards:

ANSI/ASTM	C5 Quicklime for Structural Purposes
ASTM A615	Deformed and Plain Billet-Steel Bars for Concrete Reinforcement
ASTM C90	Load-Bearing Concrete Masonry Units
ASTM C129	Non load bearing Concrete Masonry Units
ASTM C140	Test Methods of Sampling and Testing Concrete Masonry Units
ASTM C144	Aggregate for Masonry Mortar
ASTM C150	Portland Cement
ASTM C207	Hydrated Lime for Masonry Purposes
ASTM C404	Aggregates for Masonry Grout
ASTM E447	Test Methods for Compressive Strength of Masonry Prisms
UBC 21-16	Field Test Specimens for Mortar

1.03 SUBMITTALS

A. Submittals shall be furnished in accordance with Section 01 3300 – Submittal Procedures.

B. Samples:
1. Samples of concrete masonry unit colors with texture ranges indicated for selection of color. Full size samples of the blocks selected shall be submitted for final approval by the ENGINEER after color selection, if requested. If the specified product is a colored and textured unit, the samples shall be colored and textured units.
2. Samples of mortar colors for color selection
3. A 4-foot minimum square free standing sample panel shall be prepared for approval before starting masonry work if required. The panel shall remain at the Site for reference until all masonry work is completed.

C. Documentation:
1. Reports from testing Masonry units. Letter of certification that units meet ASTM standards. Recent test reports on units from independent testing company.
2. Reports from Mortar and Grout testing will be obtained from on-site testing company.

D. Grout and Mortar Mix Design:
1. Proportions for all components
2. Mill Tests for Cement
3. Admixture Certification, include chloride ion content
4. Aggregate Graduation and Certification
5. Lime Certification

1.04 QUALITY ASSURANCE

A. Applicable Standards: Concrete masonry shall conform to the local Building Code, and other applicable codes and standards of governing authorities.

B. All work shall conform to the standard of quality established by the approved free-standing sample panel.

C. Concrete block masonry units and ready mix grout from the job site shall be sampled and tested in accordance with applicable ASTM standards by onsite testing company.

D. Inspection: Whenever required under the provisions of the Building Code, work hereunder will be subject to continuous inspection by a Special Inspector selected by the ENGINEER and approved by the local Building Official having jurisdiction. The Special Inspector will work under the supervision of the ENGINEER.

E. Weather Conditions: Concrete masonry units shall not be placed when air temperature is below 40°F (4°C) and shall be protected against direct exposure to the wind and sun when erected when the ambient air temperature exceeds 100°F (37°C) in the shade with relative humidity less than 50%. Cold weather installation shall be per code and Reference Standards and as approved by the ENGINEER.

F. Product Storage: Cement, lime and other cementitious materials shall be delivered and stored in dry, weather-tight sheds or enclosures, in unbroken bags, barrels, or other approved containers, plainly marked and labeled with the manufacturers' names and brands. Mortar and grout shall be stored and handled in a manner, which will prevent the inclusion of foreign materials and damage, by water or dampness. Masonry units shall be handled with care to avoid chipping and breakage, and shall be stored on wooden pallets. Materials stored on newly constructed floors shall be stacked in such manner that the uniformly-distributed loading does not exceed 50 psf. Masonry materials shall be protected from contact with the earth and exposure to the weather and shall be kept dry and clean until used.

PART 2 – PRODUCTS

2.01 CONCRETE MASONRY UNITS

A. Concrete masonry units shall conform to ASTM C90, Type I, with maximum linear shrinkage of 0.6% from standard to oven-dried condition. Units shall be medium weight units unless indicated otherwise.

B. Concrete masonry units shall be modular size as shown or indicated on the drawings, with split-faces or smooth finish as indicated on the plans. Units shall be integrally-colored or standard unit color with painted exterior as indicated on the drawings with color selections from light and medium color range (white, black, and dark green not included in color range).

C. All bond beam, corner, lintel, sill, and other specially shaped blocks shall be provided where required or necessary. Specially shaped non-structural blocks may be constructed by saw cutting. Color and texture shall match that of adjacent units. No exposed grouted block cells will be allowed. All exposed masonry surfaces of openings and window and door openings such as sills, heads and jambs shall be finish block surfaces, not formed surfaces, unless indicated otherwise. Closed bottom bond beam blocks shall be used at heads and sills.

D. Concrete masonry units hidden from view entirely may be natural color units the same size as other adjacent masonry units.

2.02 MATERIALS

A. Portland Cement shall be Type I or II, low alkali, conforming to ASTM C150. No masonry cement will be allowed.

B. Hydrated lime shall be Type S, conforming to ASTM C207. Pulverized quicklime shall conform to ANSI/ASTM C5, shall pass a No. 20 sieve, and 90% shall pass a No. 50 sieve.

C. Sand shall conform to ASTM C144. Coarse aggregate shall conform to ASTM C404.

D. Water for mixing shall be clear potable water.

E. Reinforcing steel shall be deformed bars conforming to ASTM A615, Grade 60.

F. Any admixtures must be pre-approved prior to usage. See Section 2.04 B.

G. Veneer ties shall be per local governing code and shall be Hot Dip Galvanized per ASTM 153-B2.

H. Horizontal Joint Reinforcement shall be Hot Dip Galvanized ladder-type per ASTM 153-B2

2.03 MORTAR

A. Mortar for concrete block masonry shall be Type S, with a minimum 28-day compressive strength of 1800 psi.

B. Mortar for use with colored masonry units shall have integral color as approved by the ENGINEER.

2.04 GROUT

A. Grout shall have a minimum 28-day compressive strength of 2,000 psi. Where the grout space is less than 4 inches, pea gravel shall be omitted.

B. Admixtures may only be used when approved by the ENGINEER. When it has been approved for use, it shall be used in accordance with the manufacturer's published recommendations for the grout.

PART 3 – EXECUTION

3.01 GENERAL

A. Measurements for mortar and grout shall be accurately made. Mortar proportions shall be accurately controlled and maintained.

B. Work shall be performed in accordance with the provisions of the applicable code for reinforced concrete hollow-unit masonry.

C. Set or embed all anchors, bolts, reglets, sleeves, conduits, and other items as required.

D. All block cutting shall be by machine.

E. Reinforcing steel shall be cleaned of all loose rust and scale, and all oil, dirt, paint, laitance, or other substances, which may be detrimental to or reduce bonding of the steel and concrete.

F. Immediately before starting work, the concrete upon which the masonry will be laid shall be cleaned with water under pressure.

G. Full mortar bed for first course shall be provided.

H. Units shall be shoved tightly against adjacent units to assure good mortar bond.

I. All equipment for mixing and transporting the mortar and grout shall be clean and free from set mortar, dirt, or other foreign matter.

3.02 MIXING

A. Mortar shall be mixed according to ASTM C270. After all ingredients are in the mixer, they shall be mechanically mixed for not less than 5 minutes. Re-tempering shall be done on the mortar board by adding water within a basin formed within the mortar, and the mortar reworked into the water. Mortar, which is not used within 2-1/2 hours, shall be discarded per ASTM requirements.

3.03 ERECTION OF CONCRETE BLOCK MASONRY

A. Masonry work shall be erected in-plane, plumb, level, straight, and true to dimensions and executed in accordance with acceptable practices of the trade.

B. Unless indicated otherwise, masonry shall be laid up in straight uniform courses with running bond.

C. All masonry shall be erected to preserve the unobstructed vertical continuity of the cells measuring not less than 3-inch x 3-inch inch cross-section. Cross webs shall be full bedded in mortar, to prevent grout leakage. All head (or end) joints shall be solidly filled with mortar for a distance in from the face of the wall or unit not less than the thickness of the longitudinal face shells.

3.04 JOINTS

A. Vertical and horizontal joints shall be uniform and approximately 3/8-inch wide. Exterior joints and interior exposed block joints shall be concave-tooled to form dense surface. Special care shall be used in tooling joints so as to match existing construction. Interior or exterior non-exposed masonry and masonry behind plaster shall have flush joints.

3.05 CLEANOUTS

A. Cleanout openings shall be provided at the bottoms of all cells to be filled at each lift or pour of grout, where such lift or pour is over 4-feet in height. Any overhanging mortar larger than ½-inch or other obstructions or debris shall be removed from the insides of such cells. The cleanouts shall be sealed before grouting and after inspection. Cleanout openings shall match the finished wall in exposed masonry.

3.06 REINFORCEMENT

A. Bond beam blocks shall be used where horizontal reinforcing steel is embedded.

B. Knock-out openings shall have no steel or joint reinforcing running through the opening. Head, jambs, and sill blocks shall be used to provide an even finish surface to install window when blocks are removed. Joints at head, jambs and sills shall be stacked and continuous.

C. Vertical reinforcement shall be held in position at top and bottom and at intervals as defined on the drawings.

D. Horizontal joint reinforcing to 16” o.c. in all masonry walls.

E. Veneer ties shall be provided per Building Code and trade standards where veneered surfaces are indicated and shall be spaced no less than 16” o.c. each way.

3.07 GROUTING

A. All cells and bond beam containing reinforcement shall be filled solidly with grout. Grouting shall not be started until the wall has cured for 24 hours.

B. All grout shall be consolidated at time of pouring by vibrating. Where the grouting operation has been stopped for one hour or longer, horizontal construction joints shall be formed by stopping the grout pour 1½ inches below the top of the uppermost unit.

3.08 PROTECTION

A. Wall surfaces shall be protected from droppings of mortar or grout during construction.

3.09 FINISHING AND CLEANING

A. Masonry shall not be wet-finished unless exposed to extreme hot weather or hot wind and then only by using a nozzle-regulated fog spray sufficient only to dampen the face but not of such quantity to cause water to flow down over the masonry.

B. Finish masonry shall be cleaned and pointed in a manner satisfactory to the ENGINEER, based upon the approved sample panel.

C. All interior and exterior colored masonry work exposed to view shall be cleaned to remove all stains and other imperfections.

END OF SECTION

SECTION 05 1213 – STRUCTURAL STEEL

PART 1 – GENERAL

1.01 THE REQUIREMENT

A. Provide structural steel for building construction including sub-framing units, which are part of the general framing system. Include anchors, bases, bearing plates, bracing, lintels when part of structural framing and detail fittings.

B. Modify existing structural steel systems and components to accommodate remodeling and new work.

1.02 SUBMITTALS

A. Submittals shall be furnished in accordance with Section 01 3300 – Submittal Procedures.

1.03 QUALITY ASSURANCE

A. Comply with Governing Codes and Regulations. Provide products of acceptable manufacturers. Use experienced installers. Deliver, handle and store materials in accordance with manufacturer's instructions.

PART 2 – PRODUCTS

2.01 MATERIALS

A. Steel shapes plates and bars: ASTM A36 or ASTM A572, Grade 50

B. Steel pipe: ASTM A53

C. Anchor bolts: ASTM A307

D. High strength threaded fasteners: ASTM A325

E. Non-metallic shrinkage resistant grout; Euclid Euco NS, L&M Crystex, Sonneborn Sonnegrout or ENGINEER-approved equal. Compressive strength suited for Project Requirements.

F. Shop finish for structural steel in accordance to these Specifications.

G. Galvanized lintels: Hot dip galvanized ASTM A123

H. Welding: AWS D1.1

PART 3 – EXECUTION

3.01 INSTALLATION

A. Comply with AISC Codes and Specifications and with AWS "Structural Welding Code."

B. Employ a registered engineer to check elevations and plumb and level tolerances; certify that installed work is within AISC Standards. Testing/inspection agency may be employed to inspect welded and bolted connections.

C. Architecturally Exposed Steel: Fabricate with special care using materials carefully selected for best appearance. Store materials off ground and keep clean. Cut, fit, and assemble work with surfaces smooth, square, and with complete contact at joints. Set all cambers up. Weld all work continuously; grind smooth and flush to make seams invisible after priming. Prepare surfaces to comply with SSPC-SP6; apply prime coat within 24 hours after cleaning.

D. Touch-up field welds and abraded areas in accordance with these Specifications.

E. Provide all necessary bolt, fasteners, anchors, etc. to install or construct this scope of the WORK.

END OF SECTION

SECTION 05 3123 – METAL ROOF DECKING

PART 1 – GENERAL

1.01 DESCRIPTION

A. This section describes materials and installation of metal roof decking.

1.02 SUBMITTALS

A. Submit shop drawings in accordance with Section 01 3300 – Submittal Procedures.

B. Submit complete manufacturer's specifications and installation instructions in advance of fabrication. Include manufacturer's certification showing compliance with these specifications. Indicate on transmittal form to OWNER's Representative that a copy of each instruction has been distributed to the installer.

C. Submit detailed shop drawings showing layout of roof deck panels, anchorage details, and every condition requiring closure panels, supplementary framing, special jointing, or other accessories.

D. Submit current International Conference of Building Officials (ICBO) approval for deck diaphragm shear values for deck welds.

E. Fabrication: Prior to erection of metal decking, deliver to the OWNER's Representative a letter signed by an official of the manufacturer's firm certifying that the metal decking delivered for this WORK was fabricated in accordance with these specifications.

F. Erection: Upon completion of erection, deliver of the OWNER's Representative a letter signed by an official of the erector's firm certifying that metal decking installed in this WORK was installed in accordance with these specifications.

1.03 SUBMITTALS

A. Comply with the current editions of codes and regulations including current editions or revisions and supplements of the following reference standards: ICBO – Latest Edition.

AISI "Specification for the Design of Cold – Formed Steel Structural Members."

AWS "Code for the Welding in Building Construction." SDI "Steel Roof Deck Design Manual."

B. Performance Requirements:

1. Compute the properties of metal floor deck sections on the basis of the effective design width as limited by the provisions of the AISI specifications. Provide not less than the specified deck section properties shown including section modules and moment of inertia per foot of width.
2. Allowable Deflection: Design and fabricate deck for a maximum deflection of 1/360 of the clear span under the total uniform dead and live load.
3. Uplift Loading: Install and anchor roof deck units to resist a gross uplift loading of 30 psf (less dead load for roof areas).

C. Qualifications of Suppliers and Personnel: The erector shall have at least five years' continuous experience in the erection of metal decking.

D. Qualifications of Welding:

1. Quality welding processes and welding operators in accordance with AWS B3.0 "Welding Procedure and Performance Qualification."

2. Decking welded in place is subject to inspection and testing. Expense of removing and replacing any portion of decking for testing purposes will be borne by the Owner if welds are found to be satisfactory. If any welds are found defective, the Contractor shall be responsible for the expense of testing and removal and replacing that portion of decking to the satisfaction of the Owner's Representative.

PART 2 - PRODUCTS

2.01 MATERIALS

A. Form metal roof decking from steel conforming to ASTM A653 SS, Grade 50 min with G90.

B. Decking shall be galvanized.

C. Metal roof decking shall conform to the following properties:

Gauge:	As Shown (20 Min.)
Moment of Inertia:	0.219 in^4
Section Modulus:	+ 0.23 in^3 - 0.237 in^3
Weight per Square Foot:	2.3 (lbs.)
Depth of Corrugations:	1-1/2 inches

2.02 FABRICATION

A. Form deck units in lengths to span three or more support spacing with flush, telescoped, or nested 2-inch end laps and nesting side laps, unless otherwise shown or specified. Provide deck configurations complying with SDI "Basic Design Specifications."

B. Fabricate metal closure strips of painted sheet steel of the same quality as the deck units: not less than nominal 0.0359 inch (20-gauge) thick before coating. Form to the configuration required to provide tight-fitting closures at open ends and sides of decking.

C. Provide decking accessories, including welding washers, anchor washes with ear clips, closures, and filler strips. Provide closure plates and other attachments at openings through decking for ducts, shafts, and other penetrations. Where decking changes directions, and at perimeter, closures shall be of 18-gauge steel unless otherwise indicated.

D. Reinforce decking at openings per manufacturer's requirements.

PART 3 – EXECUTION

3.01 PRODUCT DELIVERY STORAGE AND HANDLING

A. When delivered to the jobsite, store the metal decking off the ground and cover to protect material from the elements. Slope to permit drainage.

B. In the event of damage, immediately make repairs and replacements. Replacements and repairs shall be at CONTRACTOR's expense.

3.02 INSTALLATION OF METAL ROOF DECKING

A. Place metal roof decking with edges up and flutes at right angles to supports. End laps shall always occur over supports, with a minimum end lap of 2 inches for welded attachment. Begin at corner of buildings to maintain alignment. Lap sheets one-half flute at side laps. Attach sheets to top chord of supports by plug welding through special welding washers. Fasten each end lap in the trough of the flutes at each corner (through four thickness of metal) and at center of end lap. Limit the spacing between adjacent points of attachment to 18 inches maximum over all supports. Attach placed sheets at the end of the workday. Metal connections shall be as indicated on plans.

3.03 PAINTING

A. For touch-up on decking, wire brush, clean, and paint scarred areas, welds, and rust spots on top and bottom surfaces of decking units and supporting steel members.

3.04 PROTECTION

A. Do not use deck units for storage or working platforms until permanently secured in position.

B. Assure that construction loads do not exceed carrying capacity of deck.

END OF SECTION

SECTION 05 5000 – METAL FABRICATIONS

PART 1 - GENERAL

1.01 THE REQUIREMENT

A. Provide all labor, materials, bolts, fasteners, equipment, and service necessary for fabrication and erection of structural steel and aluminum and for fabrication and installation of miscellaneous non-ferrous metals in accordance with the Contract Documents and not specifically included under other Sections of these Specifications.
   1. Erection
   2. Shop and Erection Drawings
   3. Shop Painting
   4. Galvanizing
   5. Aluminum Work Protection
   6. Cleaning Aluminum Work
   7. Miscellaneous Items
   8. Loose Lintels
   9. Sleeves and Inserts
   10. Aluminum Pipe Railing
   11. Plate Covers and Frames
   12. Guard Chains
   13. Lifting Hooks
   14. Cast Iron Wheel Guard
   15. Cast Aluminum Nosings
   16. Floor Hatches and Frames
   17. Access Doors

B. American Iron and Steel (AIS) requirement applies to this section. All iron and steel products used in this project must be produced in the United States.

1.02 REFERENCES

A. All work under this Section shall be governed by:
   1. Specifications for the design, fabrication, and erection of structural steel for buildings – American Institute of Steel Construction, current edition.
   2. Aluminum Construction Manual, Section 1, Specifications for Aluminum Structures – The Aluminum Association.
   3. All welding shall conform to the latest code of the American Welding Society.
   4. ANSI B94.12
   5. ASTM A12, A153, A384, A593 and A780
   6. ASTM A48
   7. ASTM A276
   8. ASTM A325
   9. ASTM F593, 294
   10. Federal Specification FF-S-325
   11. Federal Specification TT-V-51F
   12. SSPC SP-1, SP-2, SP3, SP-7

1.03 SUBMITTALS

A. Submittals shall be furnished in accordance with Section 01 3300 – Submittal Procedures.

B. As required by the Specifications, submit for review completely detailed and certified shop and erection drawings of the miscellaneous metal work. All Coatings or other protection

against corrosion to be applied at the shop or in the field shall be indicated on these drawings. The shop drawings for aluminum work shall show the alloys and tempers to be used, and the finish, if any to be applied.

C. Shop drawings, giving complete information necessary for fabrication, layout and installation of metal work shall be submitted to the ENGINEER for review prior to fabrication.

D. Preparation of shop drawings for fabricated metal items shall be coordinated with the manufacturers, of various equipment in order to comply with details, locations, openings, and arrangements required by the manufacturers, of various equipment in order to comply with details, locations, openings, and arrangements, required by the manufacturers.

E. Field measurements shall be made to verify all dimensions in the field, which may affect installation of work before shop drawings are made and/or fabrication is performed.

1.04 QUALITY ASSURANCE

A. The design, detail and workmanship of steel plates and structural steel shall conform to the AISC Specification for the Design, Fabrication and Erection of Structural Steel for Buildings.

B. Where welding is permitted or required, it shall conform to the current requirements of the American Welding Society for the type of work in question.

C. Aluminum work shall be fabricated in a shop where the quality of work is in accordance with the highest standards for work of this type. All work shall be executed by mechanics skilled in the fabrication of aluminum, and shall be true to detail with sharp, clean profiles, fitted with proper joints and intersections and with finishes as specified.

D. All miscellaneous metal work shall be formed to shape and size with sharp lines and angles. Shearing and punching shall leave clean true lines and surfaces.

1.05 RESPONSIBILITY FOR DIMENSIONS

A. The general design and dimensions of the miscellaneous metal work are indicated on the Drawings, correctness of the details and dimensions of the finished articles is required. Verification of conditions at the job before fabrication and coordination of the work with that of all other trades to prevent interference.

PART 2 - PRODUCTS

2.01 MATERIALS

A. Steel plated and structural steel shapes shall conform to ASTM Standard Specification for Structural Steel, Designation A36.

B. Sheet steel shall be cold rolled or hot rolled carbon sheet steel conforming to ASTM Standard Specification for Steel, Carbon, Cold Rolled Sheet, Commercial Quality, Designation A36 or AST ASTM Standard Specification for Steel, Carbon (0.15 maximum, percent), Hot Rolled Sheet and Strip, Commercial Quality, Designation A569, as appropriate.

C. Steel pipe shall conform to ASTM Standard Specifications for Pipe, Steel, Black and Hot Dipped, Zinc Coated, Welded and Seamless, Designation A53.

D. Stainless steel shall be Type 304 unless otherwise indicated or specified in the Contract Documents.

E. Aluminum work shall be fabricated of plates, rolled, or extruded shapes, sheets or casting conforming (unless otherwise permitted or indicated) to the following alloy and temper designations of the Aluminum Association:

1. Structural rolled or extruded shapes 6061-T6.
2. Extruded shapes 6063-T5.
3. Plates 6061-T6.
4. Gratings (bearing bars) 6061-T6 (crimp bars) 6063-T6.
5. Castings 214.
6. Sheets 3003-F.
7. Bolts and nuts 2024-T4.
8. Pipe Railing 6063-T6.

2.02 STEEL

A. Structural steel shall conform to the requirements of ASTM A36. Structural tubing, where used, shall conform to the requirements of ASTM A500, Grade B, and the ends of the tubing shall be properly sealed to protect the internal surfaces. Steel anchor bolts shall be ASTM A36 hot rolled threaded rod or bar stock, except where stainless steel is indicated on the Drawings.

B. Structural steel members as required shall conform to ASTM Standard shapes.

C. Base and bearing plates shall be provided where necessary to provide maximum bearing value of not more than 200 psi on solid concrete masonry units not more than 750 psi on concrete and shall be grouted in place.

D. Steel lintels shall be provided for all square head openings in masonry where shown and where other lintels are not indicated on the Drawings. Lengths of bearing at each end of lintels shall be not less than 1 inch per foot of span, but in no case less than 8 inches shall be increased or the lintels shall be fitted with bearing plates as required to provide unit pressures in pounds per square inch of not more than 200 on solid concrete masonry units and 625 on concrete. All new steel lintels shall be shop primed and ready to receive coatings as specified under Section 09 9100 – Painting. Finish coats are specified in Section 09 9700 – Special Coatings.

2.03 GALVANIZING

A. Items of miscellaneous iron work and steel work indicated on the Drawings or specified to be galvanized shall be zinc coated by the hot dip process in conformity with ASTM Standard Specification for Zinc (hot galvanized) Coatings on Products Fabricated from Rolled, Pressed, and Forged Steel Shapes, Plates, Bars, and Strip, Designation A123-78; or ASTM Standard Specifications for Zinc Coating (hot-dip) on Iron and Steel Hardware, Designation A153-78, as appropriate. Galvanizing is specified under Article 3.04, "Hot-Dip Galvanizing."

2.04 ALUMINUM

A. All structural and miscellaneous aluminum shall be Alloy 6061 (Alloy 6063 for extrusions), Temper T6, unless otherwise noted, indicated, or accepted by the OWNER. Where welding is necessary in fabrication, is shall be done in conformance with Section 7 "Welded Construction" of Specification for Aluminum Structures, referenced hereinbefore.

2.05 ALUMINUM WORK PROTECTION

A. Aluminum surfaces which after erection would otherwise be in contact with concrete or brick masonry or with mortar, shall be protected from contact therewith by a coat of bitumastic super service black manufactured by the Koppers Company, Inc. Pittsburgh, PA; Tarmastic 100 manufactured by Porter Coating Division, Porter Paint Company, North Kansas City, MO; or ENGINEER-approved equal. Areas where the paint has been damaged by abrasion or other cause shall be cleaned and repainted as directed so that the aluminum will have a complete protective paint film when brought into contact with the material against which it is being protected. Before application of coating, the surface shall

be cleaned of all dirt, heavy deposits of grease or oil and other foreign substances and shall be immersed in or swabbed with an acceptable solvent. Next the surfaces shall be rinsed with clear water and thoroughly dried.

B. Attention of the Specifications in regard to protection against electrolysis where aluminum is to be used in conjunction with dissimilar metals is required.

C. Where a shop coating of methacrylate lacquer has been specified on aluminum work to protect the surface from stain, the protective coating of lacquer worn off during handling or erection shall be replaced in the field by a new coating of lacquer of the same type.

D. During construction, care shall be taken to prevent damage to the aluminum work from splashing or the accumulation of paint, concrete, mortar, or other similar materials.

2.06 STAINLESS STEEL

A. Stainless steel shapes shall be ANSI Type 304 or 316 in accordance with ASTM A276. Miscellaneous bar stock products such as pipe straps shall be 300 Series stainless steel. Anchor bolts, nuts and washers shall be ANSI Series 300 stainless steel.

2.07 FASTENERS

A. Bolts, Nuts and Washers:
   1. Structural bolts shall be ANSI Type 300 Series stainless steel in accordance with ASTM F593, with ASTM F594 nuts. All bolts shall have hexagonal heads.
   2. Anchors and bolts including nuts and washers shall be provided where necessary for securing the work in place. Sizes, types and spacings of anchors and bolts not indicated or specified otherwise shall be as necessary for their purposes. Anchor bolts and anchors for the erection of structural steel shall be shall be stainless steel Type 316.
   3. Bolts and nuts shall be installed with anti-seize per Loctite, or ENGINEER-approved equal (or thread locker to be confirmed with WWTP Operations).

B. Expansion Anchors (In Concrete):
   1. Expansion anchors shall be of three (3) types:
      a. Stainless steel wedge type.
      b. Self-drilling plated type with stainless steel bolt and stainless-steel washer.
      c. Type of expansion anchor desired shall be noted on Drawings.
   2. Stainless steel wedge type anchors shall be ITW Ramset/Red Head or ENGINEER-approved equal of Type 316 stainless steel. Anchors shall meet or exceed latest Government GSA Federal Specifications FF-S-325, Group II, Type 4, Class 1. Anchor shall be used with 300 series stainless steel bolt and washer.
   3. Self-drilling plated anchors shall be ITW Ramset/Red Head of ENGINEER-approved equal. Anchors shall meet or exceed latest Government GSA Federal Specification FF-S-325, Group III, Type 1. Self-drilling anchors shall be electro-deposited zinc plated and chromate dipped, to meet or exceed the requirements of the latest Federal Specification QQ-Z-325, Type II, Class 3. Cutting teeth shall have minimum hardness of 82 Rockwell A scale.
   4. Steel expansion anchors shall be installed in accordance with manufacturer's recommendations.
   5. Self-drilling expansion anchors shall be installed in accordance with manufacturer's recommendations. To insure full development strength, all self-drilling expansion anchors shall be expanded over the plug in the final set, by using a bolt screwed into the female threads and impacted by hand with a suitable hammer. The final set shall not be accomplished by using the drilling tool.

6. After installation, pull-out tests by the anchor manufacturer's representative may be requested by the ENGINEER. If so, the ENGINEER will specify the number and location of the tests.

2.08 MISCELLANEOUS ITEMS

A. Items of miscellaneous metal work not particularly specified hereinafter shall be of the shape, size, materials, and details indicated on the Drawings or suitable for the purpose intended.

2.09 LOOSE LINTELS

A. Furnish all loose lintels as indicated on the Drawings or required by the Work. The loose lintels shall be fabricated from structural steel shapes and plates. All loose lintels shall be shop primed and ready to receive coatings as specified in the applicable Sections of Division 09 – Finishes.

2.10 SLEEVES AND INSERTS

A. Attention is directed to the requirements of the Specifications regarding sleeves and inserts.

2.11 ALUMINUM PIPE RAILING

A. The aluminum pipe railing shall be the product of company normally engaged in the manufacture of pipe railing. Railing shall be shop assembled in lengths not to exceed 24 feet for field erection.

B. Handrails and stair rails shall be designed to withstand a 200-pound concentrated load applied in any direction at any point on the top rail. Handrails and stair rails shall also be designed to withstand a load of 50 pounds per foot applied horizontally to the top rail. The 200-pound load will not be applied simultaneously with the 50-pounds-per-foot load. In addition, the handrails shall be designed to withstand a load of 100 pounds per foot horizontal load. The 100-pounds-per-foot vertical load does not apply to stair rails.

C. The manufacturer shall submit calculations to the ENGINEER for approval. Testing of base castings or base extrusions by an independent lab or manufacturer’s lab (if manufacturer’s lab meets the requirements of the Aluminum Association) will be an acceptable substitute for calculations. Calculations will be required for approval of all other design aspects.

D. Post spacing shall be a maximum of 8 feet 0 inches, unless noted otherwise. Posts and railings shall be a minimum of 1½ inches Schedule 40 aluminum pipe alloy 6063-T6, ASTM B429 or ASTM B221. The handrail manufacturer shall show that their posts are of adequate strength, the manufacturer may reduce the post spacing or add reinforcing dowels or may do both in order to meeting loading requirements.

E. The handrail shall be made of pipes joined together with component fittings. Samples of all components, bases, toe plate and pipe must be submitted for approval. Components that are glued at the joints will not be acceptable. Handrail and components shall be Kee Clamp, Inc., Golden Railings, Speed-Rail, or ENGINEER-approved equal.

F. Posts shall not interrupt the continuation of the top rail at any point along the railing, including corners and end terminators.

G. The midrail at a corner return shall be able to withstand a 200-pound load without loosening.

H. Expansion bolts shall be spaced 10 diameters apart and 5-diameter edge distance for not reduction in pullout strength. A safety factor of four shall be used on expansion bolt pullout values published by the manufacturer.

I. Toe plate shall conform to OSHA Standards. Toe plate shall be a minimum of 4 inches high and shall be an extrusion that attaches to the posts with clamps, which allow for expansions and contraction between posts. Toe plates shall be set ¼-inch above the walking surface. Toe plates shall be provided on handrails as required by OSHA and/or as shown on Drawings. Toe plates shall be shipped loose in stock lengths with pre-manufactured corners for field installation.

J. Openings in the railing shall be guarded by a self-closing gate. Safety chains shall not be used unless specifically shown on the Drawings.

K. Finish shall be Aluminum Association M10-C22-A41 (215-R1). The pipe shall be plastic wrapped. The plastic wrap is to be removed after erection.

L. Aluminum surfaces in contact with concrete, grout or dissimilar metals will be protected with a coat of bituminous paint, (two (2) coats of Federal Specification TT-V51F Asphalt Varnish), mylar isolators, or other approved material.

2.12 PLATE COVERS AND FRAMES

A. The plate covers and frames shall be the sizes indicated on the Drawings. The frames shall be aluminum angles of the sizes indicated with welded strap anchors for securing the frames in the concrete. The frames shall have mitered corners with welded joints ground smooth where exposed.

B. The covers shall be ¼-inch thick aluminum tread plate having an acceptable nonskid surface and reinforced with aluminum bars welded to the underside of the cover in accordance with the details. Plate covers shall be capable of supporting a uniform superimposed load of 100 psf for the span with a deflection of less than ¼-inch based on allowable fiber stress of 16,000 psi. The covers shall be made to fit neatly and accurately in the frames.

C. Hinged covers shall be furnished with heavy-duty stainless steel, plain bearing hinges with stainless steel pins. The hinges shall be fastened to the covers and frames with stainless steel machine screws. The hinged covers shall be provided with flush lift handles fabricated from ½-inch diameter aluminum rod, alloy 6061-T6511.

D. A single leaf of hinged plate covers shall be no greater than 3 feet x 5 feet in size.

E. Removable plate covers shall have 1-inch diameters finger holes to facilitate removal. All edges of holes cut in the plate covers shall be ground smooth.

F. Removable plate covers shall be no greater than 14 square feet in size with the longer dimension no greater than 7 feet.

G. Gasket plate covers shall have continuous compressible neoprene seals between the cover and the frame at the perimeter. The covers shall be secured to the frames with countersunk, flathead, stainless steel machine screws spaced approximately 6 inches on centers.

2.13 GUARD CHAINS

A. Removable guard chains at openings in aluminum pipe railings shall be fabricated from wrought, non-welded aluminum chain having 12 links per foot. The chains shall be secured to aluminum eyes bolted or welded to pipe stanchion at one end of the opening. The free ends of the chains shall be provided with hooks formed from ¼-inch diameter solid aluminum rod for attaching to similar eyes in the pipe stanchion at the opposite end of the opening.

2.14 CAST IRON WHEEL GUARDS

A. Wheel guards where indicated on the Drawings shall be cast iron guards of the sizes and types indicated on the Drawings as herein specified and shall be manufactured by Neenah Foundry Company, Neenah, WI; Flockhart Foundry Company, Neward, NJ; McKinley Iron Work, Fort Worth, TX or ENGINEER-approved equal. Wheel guards shall be given one shop coat of rust inhibitive paint before shipment.

B. Wheel guards shall be heavy-duty concrete fill type, cast iron wheel guards, No., R-4983-C manufactured by Neenah Foundry Company Type 706A manufactured by Flockhart Foundry Company or ENGINEER-approved equal. The guards shall be set 2 inches into the pavement and shall be bolted to the masonry walls. The guards shall be filled with Class A concrete and the top of the fill sloped at a 15-degree angle from the building.

2.15 CAST ALUMINUM NOSINGS

A. The cast aluminum nosing shall be abrasive cast aluminum nosing securely fastened with stainless steel, flat head bolts and wing anchors set into the fresh concrete. The nosings shall be the products of Wooster Products, Inc., Wooster, OH; American Abrasive Metals Company, Irvington, NJ; Andco Building Specialties or ENGINEER-approved equal.

2.16 ACCESS DOORS

A. Doors shall be flush panel access doors as manufactured Inryco, Inc., Milwaukee, WI; Karp Associates, Inc., Maspeth, NY; BOICO, Birmingham, AL or ENGINEER-approved equal. Doors and frames to be steel with concealed hinge and flush screwdriver operated locks.

2.17 CASTINGS

A. All miscellaneous iron castings shall be of best quality materials free from flaws and unsightly defects. Gray cast iron shall be ASTM A48 Class 35 (35,000 psi tensile strength). Furnish and install in the locations indicated casting of the type and size shown on the Drawings.

2.18 CARPENTERS IRON WORK

A. Furnish bent or otherwise custom fabricated bolts, plates, anchors, hangers, dowels and other miscellaneous steel and iron shapes as required for framing and supporting woodwork and for anchoring or securing woodwork to concrete or other structures. Manufacture or fabricate items of sizes, shapes and dimensions required. Furnish malleable iron washers for head and nuts which bear on wood structural connections, elsewhere, furnish steel washers.

2.19 MISCELLANEOUS FRAMING AND SUPPORTS

A. Provide miscellaneous steel framing and supports as required to complete the work. Fabricate miscellaneous units to the sizes, shapes and profiles shown or if not shown, of the required dimensions to receive adjacent grating plates, louvers, vents, grilles, screens, or other work to be retained by the framing. Except as otherwise shown, fabricate from structural steel shapes and plates and steel bars of all welded construction using mitered corners, welded brackets and splice plates and a minimum number of joints for filed connection. Cut, drill, and tap units to receive hardware and similar items to be anchored to the work.

2.20 SHOP PAINTING

A. Painting of miscellaneous ferrous metal work is specified in the applicable Sections of Division 09 – Finishes.

PART 3 - EXECUTION

3.01 ANCHORAGE ITEMS

A. Furnish all bolts, nuts, shims, pins, screws, nails, and other anchors, which, may be required by the Drawings or job conditions to secure all items permanently in place whether or not specifically called for or shown on the Drawings.

3.02 FABRICATION AND INSTALLATION OF METAL WORK

A. General: All metal items shall be accurately fabricated and erected with exposed joints close fitting. All joints shall be such of character and so assemble that they will be as strong and rigid as adjoining sections. Joints shall be located where least conspicuous. Items shall have smooth finished surfaces except where otherwise shown or specified.

B. Built-In Items: Members or parts to be built-in with masonry or concrete shall be in a form affording a suitable anchorage or shall be provided with approved anchors, expansion shields or other approved means of securing members.

C. Dissimilar Metals: Ferrous and non-ferrous metals shall be insulated at all contacts with felt washer, mylar strips or sheets, bitumastic paints, or other acceptable means. All aluminum surfaces in contact with concrete shall be coated with two (2) coats of Federal Specification TT-V51F Asphalt Varnish or ENGINEER-approved equal.

D. Connections:
   1. All required anchors, couplings, bolts, and nuts required to support miscellaneous metalwork should be furnished and installed as required.
   2. Weights of connections and accessories shall be adequate to safely sustain and withstand stresses and strains to which they will be normally subjected.
   3. Connections shall be bolted except where welding is called for in the Drawings. Bolts shall be ¾-inch diameter unless noted or required otherwise.

E. Expansions Anchors:
   1. Expansions anchors shall be installed in holes drilled into concrete with carbide tipped drill bits conforming to ANSI B94.12-1977, using a rotary impact hammer for ½-inch and 3/8-inch anchors. Hole depth shall equal or exceed the anchor manufacturer’s minimum recommended embedment. Should hole depth equal anchor manufacturer’s minimum recommended embedment, hole shall be cleaned out by air pressure. The minimum hole depth shall be per anchor manufacturer’s recommendations. Assure hole is perpendicular and conforms in size to anchor manufacturer’s recommendation.
   2. Washer and nut shall be assembled on anchor so that the top of the nut is flush with the top of the anchor. Then the anchor shall be driven into the hole through the work until the washer bears against the work. The anchor shall be expanded in accordance with the manufacturer’s recommendations.
   3. General: Provide stainless steel fasteners for exterior use or where built into exterior walls. Select fasteners for the type, grade and class required.
   4. Bolts and Buts: Regular hexagon head type, stainless steel, Grade A (within tankage)
   5. Lag Bolts: Stainless steel (within tankage)
   6. Machine Screws: Stainless steel
   7. Wood Screws: Stainless steel
   8. Plain Washers: Stainless steel
   9. Masonry Anchorage Devices: Stainless steel
   10. Toggle Bolts: Stainless steel (within tankage)
   11. Lock Washers: Stainless steel

12. Bolts, buts, lags, toggle bolts and lock washers above and exterior to tankage shall be stainless steel

3.03 WELDING

A. Welding procedures, welders, and welding operators, both for shop and field welding, shall be qualified and certified in accordance with the requirements of AWS D1.1 “Welding in Building Construction” of the American Welding Society. Manufacturer’s and fabricator’s shop drawings shall clearly show complete information and all field welding shall be performed in conformance with this information regarding location, type, size, and length of all welds, all in accordance with AWS A2.0 “Standard Welding Symbols” of the American Welding Society. Special conditions shall be fully explained by notes and details.

3.04 HOT-DIP GALVANIZING

A. All fabrication, galvanizing and repair shall comply with ASTM Standards as they apply in accordance with the publication “ASTM Standard for Materials Hot-Dip Galvanized after Fabrication” issued by American Hot-Dip Galvanizers Association, Inc. In particular, the following specific standards shall apply to work under this contract: ASTM A123, A153, A384, A385, A563 and A780.

B. Items to be galvanized shall be fabricated in accordance with ASTM A385.

C. Galvanizing for fabricated steel items, shall conform to ASTM A123 and shall be done after fabrication. Steel assemblies shall be subject to safeguarding from warpage and distortion during galvanizing per ASTM A384.

D. Upon field erection, any damage measuring more than 1/10-inch wide shall be repaired with a zinc-based solder or zinc-rich paint in accordance with ASTM A780. Marred, damaged, or uncoated areas 4 square inches and less shall be patched with a zinc-based solder to a thickness of 5 milligrams; areas greater than 4 square inches shall be patched with an organic zinc-rich paint to a dry film, Devcon Z, LPS Instant Cold Galvanized or ENGINEER-approved equal. The resident project representative shall determine the extent of damage, which would require recoating.

E. Items subject to distortion during transit, such as thin, curved members, etc., shall be stacked on edge and/or blocked to prevent radius change or other distortion while in transit to and from the galvanizing plant.

3.05 PAINTING

A. Painting of miscellaneous ferrous metal work shall be in accordance with these Specifications.

3.06 MISCELLANEOUS METAL FABRICATIONS

A. Rough Hardware:
   1. Furnish bent or otherwise custom fabricated bolts, plates, anchors, hangers, dowels, and other miscellaneous steel and iron shapes as required for framing and supporting woodwork, and for anchoring or securing woodwork to concrete or other structure. Straight bolts and other stock rough hardware items shall be in accordance with these Specifications.

B. Fabricate items to sizes, shapes and dimensions required. Furnish malleable iron washers for heads and nuts, which bear on wood structural connections; elsewhere, furnish steel washers.

C. Miscellaneous Steel Trim:
   1. Provide shapes and sizes for profiles shown. Except as otherwise indicated, fabricate units from structural steel shapes and plates and steel bars, with continuously welded joints and smooth exposed edges. Use concealed field splices wherever possible. Provide cutouts, fittings and anchorages as required for coordination of assembly and installation with other work.
   2. Galvanize miscellaneous steel trim where indicated.

END OF SECTION

SECTION 05 5100 – METAL STAIRS

PART 1 – GENERAL

1.01 THE REQUIREMENT

A. Furnish and install metal stairs in accordance with the Contract Documents.
   1. Concrete Pan-filled Stairs
   2. Industrial Type Stairs
   3. Safety Tread Stairs
   4. Railing System

1.02 REFERENCES

A. American Concrete Institute (ACI):

117	Standard Specifications for Tolerances for Concrete Construction and Materials
301	Standard Specifications for Structural Concrete

B. American Society for Testing and Materials (ASTM):

A36/A36M	Carbon Structural Steel
A53	Pipe, Steel, Black and Hot-Dipped, Zinc Coated, Welded and Seamless
Al23	Zinc (Hot-Dip Galvanized) Coatings on Iron and Steel Products
A153	Zinc Coating (Hot-Dip) on lion and Steel Hardware
A307	Carbon Steel Bolts and Studs, 60,000 psi Tensile Strength
A500	Cold-Formed Welded and Seamless Carbon Steel Structural Tubing in Rounds and Shapes
A501	Hot-Formed Welded and Seamless Carbon Steel Structural Tubing
A5701 A570M	Structural Steel, Sheet and Strip, Carbon, Hot-Rolled
A611	Steel, Sheet, Carbon, Cold-Rolled, Structural Quality
C33	Concrete Aggregates

C. Steel Structures Painting Council (SSPC):

SP 1	Solvent Cleaning
SP 3	Power Tool Cleaning
SP 10	Near-White Blast Cleaning
SP 11	Power Tool Cleaning to Bare Metal

1.03 SUBMITTAL

A. General: Refer to Section 01 3300 – Submittal Procedures for submittal requirements and procedures.

B. Stair Design: Stairs shall be designed and engineered by the manufacturer, incorporating specified criteria, and employing a professional civil or structural engineer currently registered in the State of Arizona to perform the design engineering. Include design data along with Shop Drawings. Drawings and design data shall be stamped and signed by the manufacturer's professional engineer.

C. Shop Drawings: Submit fully detailed Shop Drawings of metal stairs and railings, showing sizes, details of fabrication and construction, methods of assembly, handrail brackets, locations of hardware, anchors, and accessories, and installation details.

D. Product Data: Submit manufacturer's product data of stair type and corrosion-inhibitive finish system. Include patterned or embossed treads, safety coated treads, railing system, handrails, and handrail brackets.

PART 2 – PRODUCTS

2.01 MANUFACTURERS

A. Type and Manufacture: Provide steel stairs of the following types as indicated:

1. Concrete Pan-Filled Stairs: Steel pan-type stairs with concrete-filled treads and landings, and with treads, risers, and platforms constructed of structural steel sheet. Treads shall have nosings.
2. Industrial Type Stairs: Steel stairs with tread fabricated from checkered or diamond-pattern steel plate or sheet, or with treads fabricated from button-embossed structural steel sheet. Risers shall be closed, fabricated from steel sheet.
3. Safety Tread Stairs: Steel stairs with formed steel treads and platforms, coated with anti-skid safety surface, and closed steel sheet risers.
4. Railing System: All stairs shall be provided with a complete stair railing system, including handrails and handrail brackets at walls, fabricated from steel pipe.

B. Stringers and Supporting Steel:

1. Structural Shapes: Standard structural sections, as indicated, conforming to ASTM A36/A36M.
2. Structural Tubing: Welded or seamless steel tubing, conforming to ASTM A500 or ASTM A501 (minimum yield point of 33,000 psi), of size and shape indicated.

C. Treads and Risers, Platforms and Landings:

1. Steel Sheet: Treads, risers, and platforms shall be fabricated from structural steel sheet, of gauge or thickness indicated, conforming with ASTM A570/A570M or ASTM A611, with minimum yield point of 33,000 psi, faulted as indicated. When gauge is not indicated, provide 14-gauge steel sheet.
2. Patterned Steel Plate: Treads and platforms for industrial-type closed-riser stairs shall be commercial quality checkered or diamond-pattern steel plate or structural steel sheet of thickness indicated, formed to shape and configuration indicated. Risers shall be steel sheet as specified above. Treads and platforms shall be hot-dip galvanized after fabrication in accordance with ASTM Al23.
    a. Button-Embossed Steel Sheet: Treads and platforms may be fabricated from button-embossed structural steel sheet of minimum 12-gauge thickness, with punched circular holes at apex of buttons for nonslip effect, and punched circular holes between buttons for drainage. Buttons shall be spaced 5/8 inch on centers. Drainage holes shall be spaced 1-1/4 inches on centers, eliminating the buttons at these locations. Hole size for button holes shall be 118-inch diameter, plus or minus 1/32 inch. Hole size for drainage holes shall be 1/4-inch diameter, plus or minus 1/16 inch. Treads and platforms shall be hot-dip galvanized after fabrication in accordance with ASTM Al23.
3. Safety Coated Treads: Formed steel sheet coated with anti-skid or nonslip encapsulated aluminum oxide material bonded or fused to the steel surface. Submit product data and sample for approval.

D. Railings and Handrails:

1. Pipe: Pipe for railings, pipe supports, and handrails shall be seamless steel pipe conforming to ASTM A53, Type S, Grade A, with special instructions to the manufacturer to provide Architectural Handrail Grade, of diameters and sizes indicated.

2. Handrail Brackets: Provide handrail brackets for handrails at walls, manufactured specifically for the purpose of cast, forged, or wrought steel, of configuration indicated or required to suit conditions, galvanized after fabrication.

E. Anchors, Fasteners, and Accessories: Provide all required anchors, fasteners, miscellaneous components, and accessories as required for a complete and finished stair installation. Bolts, nuts, and washers shall conform with ASTM A307, galvanized in accordance with ASTM A153.

1. Expansion Bolts: Where anchors are not cast into the concrete construction, provide galvanized expansion type anchors with matching galvanized steel bolts or studs with nuts, of sizes as indicated or required. Provide washers under all bolt heads and nuts. Expansion bolts require approval of the Engineer before they may be installed in post-tensioned slabs. Expansion bolts will not be permitted for use on concrete curbs or along the edge of concrete or a concrete joint.

F. Paint: Corrosion-inhibitive protective primer as specified in Article 2.04 herein.

G. Grout: As per these Specifications.

2.02 FABRICATION

A. Metal stairs and railings shall be fabricated by firms or shops experienced and skilled in the construction of metal stairs and architectural railings. There shall be no exposed screws, bolts, and fasteners in the finished work.

B. For items bearing on concrete, provide steel bearing plates and anchors as indicated or required. Base or bearing plates shall be leveled by means of adjustment nuts. The space below plates shall be packed solid with full bed of non-shrink grout. Templates shall be furnished, together with instructions for setting of anchors, anchor bolts, and bearing plates. The Contractor shall supervise and ensure that anchors and related items are properly set in concrete during the progress of the work.

C. Welding shall be performed in the shop, unless otherwise indicated. Welds where exposed to view shall be ground down and dressed smooth, so that the shape and profile of the item welded are maintained.

D. Holes shall be cut, drilled, or punched at right angles to the surface of the metal and shall not be made or enlarged by burning. Holes in base or bearing plates shall be drilled. Holes shall be provided in members as required to permit connecting the work of other trades.

E. Metal stairs and railings shall be prefabricated and preassembled in the factory or shop as far as practicable.

2.03 GALVANIZING

A. Where certain components are indicated to be galvanized, comply with galvanizing requirements of these Specifications.

2.04 CLEANING AND PAINTING

A. All surfaces of metal stairs and railings, including surfaces of pan-filled stairs, shall be cleaned and treated to assure maximum paint adherence, prior to application of the shop prime coat, in accordance with SSPC-SP 1, SSPC-SP 3, SSPC-SP 10, and SSPC-SP 11 as applicable for the exposure and application.

B. Ferrous metalwork shall be given a shop coat of rust-inhibitive metal primer as specified in these Specifications, or other ENGINEER-approved rust-inhibitive metal primer standard with the stair manufacturer. All surfaces of stairwork and railings shall be spray-painted.

C. Where galvanized surfaces are indicated to be painted, comply with cleaning and painting requirements of these Specifications.

E. Coordinate with these Specifications, for compatibility of the prime coat and finish coat of paint.

2.05 CONCRETE

A. Concrete for pan-filled stair treads and landings shall be concrete, weighing not less than 120 pounds per cubic foot, with a minimum compressive strength at 28 days of 4,000 psi. Maximum aggregate size shall be 3/8 inch (ASTM C33, Size No. 8). Include a mix of aluminum oxide and silicone carbide grit particles as required to produce non-slip tread surfaces

PART 3 – EXECUTION

3.01 INSTALLATION

A. Stairs and railings shall be installed by the manufacturer or its authorized representative as indicated and in accordance with the approved Shop Drawings and the manufacturer's installation instructions. Stairs and railings shall be installed with all accessories furnished by the manufacturer or fabricator as required for complete and finished stair installations.

B. Installation of stair work shall be true and horizontal or perpendicular as the case may be, level and square, with angles and edges parallel with related lines of the building or structure.

C. Shop fabricated items subject to damage shall be braced and carefully handled to prevent distortions or other damage.

D. Field welding, where required, shall conform with requirements specified for shop fabrication.

E. Bearing plates shall be supported at the proper level by means of adjustment nuts on anchor bolts. Bases and plates shall be set accurately using a high-strength, non-shrink grouting mortar to obtain uniform bearing.

3.02 FIELD PAINTING

A. After installation, exposed painted surfaces, field welds, and other abraded or damaged primed surfaces shall be touched up with an additional coat of the same primer for ferrous surfaces as herein before specified for shop painting. Spray paint all touch-up work.

B. Finish field painting is specified in Sections 09 9700 – Special Coatings, and 09 9100 – Painting.

3.03 CONCRETE WORK

A. Concrete for pan-filled stairs shall be placed, compacted, finished, and cured in accordance with applicable requirements of ACI 301.

B. Treads and landings shall receive a "troweled finish" in combination with a "nonslip finish" with "very flat" tolerances as specified in ACI 301 and ACI 117.

END OF SECTION

SECTION 05 5133 – METAL LADDERS

PART 1 - GENERAL

1.01 THE REQUIREMENT

A. Furnish and install handrails in accordance with the Contract Documents.

B. Related Sections: Section 05 50 00 – Metal Fabrications.

1.02 SUBMITTALS

A. Submittals shall be furnished in accordance with Section 01 33 00 – Submittal Procedures.
   1. Detail fabrication and erection of each ladder indicated. Include plans, elevations, sections, and details of metal fabrications and their connections.
   2. Provide templates for anchors and bolts specified for installation under other Sections.
   3. Provide reaction loads for each hanger and bracket.

B. Qualification Data:
   1. Refer to Quality Assurance provisions for submittal requirements evidencing experience, certifications and resources.

1.03 QUALITY ASSURANCE

A. Manufacturer Qualifications: A firm experienced in producing aluminum metal ladders similar to those indicated for this Project.
   1. Record of successful in-service performance.
   2. Sufficient production capacity to produce required units.
   3. Professional engineering competent in design and structural analysis to fabricate ladders in compliance with industry standards and local codes.

B. Installer Qualifications: Competent and experienced firm capable of selecting fasteners and installing ladders to attain designed operational and structural performance.

C. Product Qualification: Product design shall comply with OSHA 1910.27 minimum standards for ladders.

1.04 PROJECT CONDITIONS

A. Field Measurements: Verify dimensions by field measurement before fabrication.
   1. Established Dimensions: Where field measurements cannot be made without delaying the Work, indicate established dimensions on shop drawing submittal and proceed with fabrication.

1.05 WARRANTY

A. Manufacturer has responsibility for an extended Corrective Period for work of this Section for a period of 5 years commencing on the shipment date of the product against all the conditions indicated below, and when notified in writing from Owner, manufacturer shall promptly and without inconvenience and cost to Owner correct said deficiencies.
   1. Defects in materials and workmanship.
   2. Deterioration of material and surface performance below minimum OSHA standards as certified by independent third party testing laboratory. Ordinary wear and tear, unusual abuse or neglect excepted.
   3. Within the warranty period, the manufacturer shall, at its option, repair, replace, or refund the purchase price of defective ladder.

B. Manufacturer shall be notified immediately of defective products, and be given a reasonable opportunity to inspect the goods prior to return. Manufacturer will not assume responsibility, or compensation, for unauthorized repairs or labor. Manufacturer makes no other warranty, expressed or implied, to the merchantability, fitness for a particular purpose, design, sale, installation, or use, of the ladder; and shall not be liable for incidental or consequential damages, losses of or expenses, resulting from the use of ladder products.

PART 2 - PRODUCTS

2.01 MANUFACTURERS

A. Okeeffe's, or equal.

2.02 LADDERS

A. Fixed and Cage Ladder Design:
   1. Safety cages are required on ladders over 24 feet
   2. Safety cages are required on all ladders in high or hazardous areas.
   3. Landing platforms are required at 50 feet above the bottom of the ladder.
   4. Rail and harness fall arrest system as alternate to safety cage and landing platforms shall be a permissible manufacturer's option.
      a. Fixed Ladder Bottom Bracket:
      b. Bottom floor supported bracket.
      c. Bottom wall supported bracket.
      d. Bracket as drawn.

B. Fixed Access Ladder:
   1. Heavy Duty Tubular Rail.
      a. Model 501 as manufactured by O'Keeffe's, or equal
   2. Tubular Rail Low Parapet Access Ladder with Roofover Rail Extension.
      a. Model 502 as manufactured by O'Keeffe's, or equal
   3. Tubular Rail Low Parapet Access Ladder with Platform and Return.
      a. Model 503 as manufactured by O'Keeffe's, or equal

C. Cage Ladder:
   1. Cage Ladder with Roof Hatch Rail Extension.
      a. Model 531 as manufactured by O'Keeffe's, or equal
   2. Cage Ladder with High Parapet Access, Platform and Return.
      a. Model 533 as manufactured by O'Keeffe's, or equal

D. Ship Ladder:
   1. Ships Ladder.
      a. Model 520 or 520A as manufactured by O'Keeffe's, or equal
   2. Ship Ladder with Platform.
      a. Model 521 or 521A as manufactured by O'Keeffe's, or equal
   3. Incline:
      a. 60 degree.
      b. 75 degree.
      c. As drawn.

2.03 FINISHES

A. Paint. Urethane over chemically pretreated substrate.
   1. Caution Yellow (RAL 1018).
   2. As scheduled on drawings.

2.04 MATERIALS

A. Aluminum Sheet: Alloy 5005-H34 to comply with ASTM B209.

B. Aluminum Extrusions: Alloy 6063-T6 to comply with ASTM B221.

2.05 FABRICATION

A. Rungs: Not less than 1-1/4 inches in section and 18–3/8 inches long, formed from tubular aluminum extrusions. Squared and deeply serrated on all sides.
   1. Rungs shall withstand a 1,500 pound load without deformation or failure.

B. Channel Side Rails: Not less than 1/8 inch wall thickness by 3 inches wide.

C. Heavy Duty Tubular Side Rails: Assembled from two interlocking aluminum extrusions no less than 1/8 inch wall thickness by 3 inches wide. Construction shall be self-locking stainless steel fasteners, full penetration TIG welds and clean, smooth and burr-free surfaces.

D. Ship Ladders: Not less than 1-1/4 inches high, 4-1/8 inches deep, and 2 feet wide; tread spacing shall be 1 foot on center. Handrails shall be aluminum pipe, not less than 1-1/2 inches in diameter with hemispheric end caps.

E. Walk-Through Rail and Roof Rail Extension: Not less than 3 feet 6 inches above the landing and shall be fitted with deeply serrated, square, tubular grab rails.

F. Landing Platform: 1-1/2 inches or greater diameter, tubular aluminum guardrails and decks of serrated aluminum treads.

G. Security Doors: Formed 1/8 inch thick aluminum sheet. Security panels shall extend on both sides, perpendicular to the door face, to within 2 inches of the wall. Security door shall be furnished with continuous aluminum piano hinge and heavy duty forged steel locking hasps.

H. Ship Ladder Seismic Bottom Support: Manufacturer’s standard; two isolation bearings per stringer.

I. Ladder Safety Post: Retractable hand hold and tie off.

J. Rail and Harness Fall Arrest System: Supplied where specified as alternate to safety cage and landing platforms, in accordance with OSHA regulation 1910.27; permanently mounted to ladder rungs and complete with necessary components.

K. Safety Cages:
   1. Fabricate ladder safety cages to comply with authority having jurisdiction. Assemble by welding. Spacing of primary hoops, secondary hoops and vertical bars shall not exceed that required by code.
   2. Safety cage hoops and vertical bars: 3/16 inch by 2 inches aluminum bar.

PART 3 – EXECUTION

3.01 EXAMINATION

A. Coordinate anchorages. Furnish setting drawings, templates, and anchorage structural loads for fastener resistance.

B. Do not begin installation until supporting structure is complete and ladder installation will not interfere with supporting structure work.

C. If supporting structure is the responsibility of another installer, notify Architect of unsatisfactory supporting work before proceeding.

3.02 INSTALLATION

A. Install in accordance with manufacturer's instructions, and in proper relationship with adjacent construction.

3.03 PROTECTION

A. Protect installed products until completion of project.

B. Touch-up, repair or replace damaged products before Substantial Completion.

END OF SECTION

SECTION 05 5213 – PIPE AND TUBE RAILINGS

PART 1 - GENERAL

1.01 THE REQUIREMENT

A. Furnish and install handrails in accordance with these Specifications and Contract Documents.

1.02 SUBMITTALS

A. Submittals shall be furnished in accordance with Section 01 3300 – Submittal Procedures.

PART 2 - PRODUCTS

2.01 MATERIALS

A. Rolled Plates and Shapes: ASTM A36

B. Steel Pipe: ASTM A53, Grade B, Type E or S, Schedule 40 unless otherwise noted.

C. Tubing: Cold formed shapes per ASTM A500 or hot-formed shapes per ASTM A501. Wall thickness for either category shall be in accordance with the thickness and tolerances specified in ASTM A501.

D. Bolts: ASTM A307, Grade A, with hexagon heads or nuts where exposed in the finish work, with flat heads for countersinking where flush bolting is specified or required.

E. Plastic Cover: Polyethylene Thermoplastic (HDPE) tubes having ultra-violet resistance and anti-static properties, nominal thickness 0.250 inches. Color shall be OSHA yellow unless otherwise noted. Size covers for pipe diameters.

F. Grout: Non-shrink, nonmetallic type per CE CRD-621 and ASTM C1107. Grout shall be premixed and factory-packaged. Formulation shall be non-staining, noncorrosive, nongaseous properties. Provide grout as recommended by grout manufacturer for interior or exterior application.

G. Anchor Bolts:

1. Expansion Anchors: Threaded stud type with two independent expansion anchor wedges per Fed. Spec. FF-S-325, Group II, Type 4, Class 1 for concrete expansion anchors. Stud, wedges, washer, and nut shall be zinc-plated steel.
2. Adhesive Anchor System: Self-contained glass vial containing pre-measured amounts of quartz sand, hardening agent, and polyester resin. Studs shall be threaded rod conforming to ASTM A307 with compatible washers and hexagon nuts furnished by the anchor manufacturer.

H. Concrete: Provide 3,000 psi, 28-day strength concrete unless noted otherwise. ASTM C94, slump of 4 inches ± 1 percent.

1. Exterior Concrete: Include air-entrainment or 6 percent ± 1 percent.
2. Cement: ASTM C150, Type 1.
3. Aggregates: ASTM C33 normal weight, natural coarse aggregate, maximum ¾" diameter.
4. Water: Potable

2.02 HAND RAIL SYSTEM

A. Structural Performance of Handrails and Railings: Provide handrails and railings capable of withstanding the following structural loads based on 2000 international building code, without exceeding allowable design working stresses of materials for handrails, railings anchors, and connections:
   1. Top Rail of Guards and hand rails: Capable of withstanding the following loads as indicated
      a. Concentrated load of 200 lbf (890 N) applied at any point and in any direction.
      b. Uniform load of 50 lbf/ft: (730 N/m) applied in any direction at the top and to transfer this load through the supports to the structure.
      c. Concentrated and uniform loads above need not be assumed to act concurrently.
   2. Intermediate rails, balusters, and filler panels: Capable of withstanding the following loads applied as indicated:
      a. Applied normal load of 50 pounds (0.22kN) on an area not to exceed 1 square foot including openings and space between rails.
      b. Reactions due to this loading are not required to be superimposed with the proceeding section.

B. Provide Handrail system complying with the following requirements
   1. Sleek system with internal connectors.
      a. Rails and Posts
         1) Extruded Aluminum Pipe ASTM B429, Aluminum alloy 6061-T6. Finish AA M10C22A41. Posts – 1 ½ inch IPS Schedule 80. Rails – 1 ½ inch IPS Schedule 40.
         2) Steel pipe scheduled 40. Posts and rails 1 ¼ inch, with high-density polyethylene thermoplastic coating, nominally 0.125 inch thick.
      b. Mechanical Connectors
         1) Post and handrail connector fittings
         2) Machined from solid aluminum bar stock of alloy 6063-T6 (ASTM B221) or austenitic stainless steel bar stock of alloy 303 (ASTM A582) or machined castings of high tensile aluminum-magnesium alloy 535.0 (ASTM B26) or castings from high purity ingot 535.2 (ASTM B179)
         3) Anodize finish 0.7 mil minimum thickness.
         4) Design – Fittings shall be the type which fastens externally with anodized aluminum, tubular rivet nut with socket head cap screw and stainless steel lock washer. Internal connections by means of an internal double tang, expanded by an internal/external, reverse knurl, cup point, hexagon socket set screw.
      c. Flanges
         1) Sand cast from high tensile aluminum-magnesium alloy 535.0
         2) Supplied with anodize finish – 7-mil minimum thickness.
         3) Design – Fittings shall be the type, which fastens directly to the pipe by means of an internal/external, reverse knurl, cup point, hexagon socket set screw.
         4) All anchoring hardware shall be 300 series stainless steel.
      d. Fasteners
         1) All fasteners to be 302 or 304 stainless steel.

PART 3 - EXECUTION

3.01 INSTALLATION

C. CONTRACTOR shall provide submittals in accordance with Section 01 33 00 -Submittal Procedures showing the layout of the railing where called out in the Contract Documents.

D. Submittal shall indicate where railing shall be cored or plate mounted.

E. Provide 1-inch minimum bearing with maximum erection clearance of ¼-inch all around.

F. Protect all surfaces to be in contact with concrete or dissimilar metals with two (2) coats of Federal Specification TT-V-51F Asphalt Varnish.

END OF SECTION

SECTION 05 5300 – METAL GRATINGS

PART 1 – GENERAL

1.01 THE REQUIREMENT

A. Furnish and install metal bar grating (solid top or open) were shown on the Drawings and in accordance with the Contract Documents.

1.02 REFERENCES

A. Design, fabrication, and installation of grating shall be in accordance with Standard Specifications and Voluntary Code of Practice in Metal Bar Grating Manual, 1979 Edition, published by National Association of Architectural Metal Manufacturers, Chicago, IL (ANSI A-202.1).

B. ASTM B210

C. ASTM B221

D. Federal Specification TT-V-51F

1.03 SUBMITTALS

A. Submittals shall be furnished in accordance with Section 01 3300 – Submittal Procedures.

PART 2 – PRODUCTS

2.01 DESIGN CRITERIA

A. Support minimum uniform live load of 250 psf

B. Deflection not to exceed span of bearing bars (in inches) divided by 240

C. Maximum Fiber Stress: 12,000 psi

2.02 BASIC DESIGN

A. The gratings shall be 2½-inch metal that shall fit into the area shown on the mechanical plan.

B. The gratings shall be secured in place by at least four (4) acceptable removable-type fasteners per grating panel. The ends of each grating section shall be banded with bearing bars.

C. All openings for fixtures or pipes, which require the cutting of three main bars or more, shall be finished in a similar manner as the ends.

D. Gratings in concrete shall have coated aluminum or reinforced fiberglass angle frames with mitered corners and with welded joints ground smooth where exposed. The frames shall have welded anchors and shall be set in the concrete as it is placed.

E. Bearing and cross bars shall be flush at surface.

F. All free and supported bar ends around perimeter and around cutouts shall be banded.

G. Provide removable sections of grating with suitable end bearing where noted on the Drawings or otherwise required.

2.03 MATERIAL

A. Bear Bars: ASTM B221, 6061-T6 or 6063-T6, aluminum

B. Cross Bars: ASTM B221 (extruded) or ASTM B210 (drawn) aluminum

C. Steel Fasteners: Stainless steel, when used with aluminum grating

D. Finish: Aluminum mill finish (as fabricated)

E. Anchors: Stainless Steel Saddle clips of manufacturer's standard design

PART 3 – EXECUTION

3.01 INSTALLATION

A. CONTRACTOR shall provide submittals in accordance with Section 01 33 00 -Submittal Procedures showing the layout of the grating where grating is called out in the Contract Documents:

B. Grating shall be set with full and uniform end bearing to preclude rocking; do not use wedges or shims.

C. Provide 1-inch minimum bearing with maximum erection clearance of ¼-inch all around.

D. Anchor grating with saddle clips in accordance with manufacturer's recommendations or as detailed on the Drawings.

E. Provide cutouts for the passage of pipe, valve and equipment operators, conduit, stems and similar work; cutouts for circular obstructions shall be at least 2 inches larger in diameter than the obstruction.

F. Protect all surfaces of angles and frames to be in contact with concrete or dissimilar metals with two (2) coats of Federal Specification TT-V-51F Asphalt Varnish.

END OF SECTION

SECTION 05 5410 – SAFETY HATCHES

PART 1 -- GENERAL

1.01 THE REQUIREMENT

A. Furnish and install safety hatches in accordance with the Contract Documents.

B. The safety hatches shall be designed to combine covering of the opening, fall through protection per OSHA standard 1910.23 and controlled confine space entry per OSHA standard 1910.146.

1.02 SUBMITTALS

A. Submittals shall be furnished in accordance with Section 01 3300 – Submittal Procedures.

1.03 QUALITY ASSURANCE

A. Warranty: A ten-year warranty protects against defects in materials and workmanship from the date of purchase. Any part that fails in normal use will be furnished at no charge. The warranty is invalid if product is modified, changed, damaged, improperly installed or used in an application for which it is not designed.

PART 2 -- PRODUCTS

2.01 MANUFACTURERS

A. Safety hatch manufacturer shall be:
1. EJ
2. Bilco
3. ENGINEER-approved equal.

2.02 EQUIPMENT

A. Hatches shall be rated for 300 PSF (Pedestrian Rated) at a minimum, unless noted otherwise.

B. Where noted in the Contract Documents, heavy duty H20 traffic rated hatches shall be rated for AASHTO H-20 wheel loads where not subject to high-density traffic. Deflection shall not exceed 1/150th of the span. AASHTO. H-20 requirements dictate a 16,000-lb. load, on a single contact area of 10” x 20”.

C. Where noted in the Contract Documents, extra heavy duty “H30” traffic rated hatches shall have load capacity meeting a proof load of 24,000 lbs. applied to a 9” x 9” contact area. Units not conforming to Proof Load requirement will not be accepted as equal.

D. Each door shall be equipped with a stainless steel hold open arm. Door shall lock open in the 90-degree position. Hold open arm shall be fastened to the frame with a ½-inch grade 316 stainless steel bolt.

E. Covers to be lift assisted must comprise a two piece stainless steel inner and outer tube housing a stainless steel mechanical spring. Covers to rest open at 105˚. H-20 and H-30 rated hatches shall be provided with lift assist mechanism.

F. Angle frame shall be of extruded aluminum with a continuous 1½-inch anchor flange. H-30 frame shall be ductile iron. Exterior of frame (in contact with concrete) shall be supplied with a 3 mil thickness of “Tufcoat 3.5PR” Industrial Coating by Dupont. Application procedure shall be as recommended by Dupont. Isolation coatings shall not be substituted.

G. Hinges shall be of heavy-duty design. Material shall be grade 316 stainless steel. Each hinge shall have a 3/8-inch grade 316 stainless steel pin. Hinges shall be bolted to the

angle frame and diamond plate, with grade 316 stainless steel bolts and ny-lock nuts. Aluminum hinges, or stainless steel hinges not utilizing a 3/8" stainless steel pin shall not be considered equal. Dimensions and quantities for each hatch are provided in the construction plans.

H. Each hatch shall be supplied with a grade 316 stainless steel slam lock, with keyway protected by a threaded aluminum plug. Plug shall be flush with the top of the ¼-inch diamond plate. Slam lock shall be fastened with four grade 316 stainless steel bolts and washers. Slamlocks that fasten with only two grade 316 stainless steel bolts and washers shall not be accepted. Any hinges or cut outs in hatch will be shown in the construction plans.

I. Each hatch shall be equipped with a stainless steel lift handle. The lift handle shall be flush with the top of the ¼-inch diamond plate.

J. The safety grate shall be made of 6061-T6 aluminum and designed per the most current and published edition of "Specifications for Aluminum Structures," by the Aluminum Association, Inc., for "Bridge Type Structures.

K. Where noted in the Contract Documents, for heavy duty hatches, grating shall be designed to withstand an H-20 or H-30 wheel load per AASHTO specifications. Safety Hatch type systems that utilize the H-20/H-30 reinforcement on the cover, and supplied with a 300 PSF (pedestrian rated) grate, as well as a safety net system shall not be acceptable.

L. Grate openings shall allow for visual inspection, limited maintenance, and float adjustments while the safety grate fall through protection is left in place.

M. Design must assure that the fall through protection is in place before the doors can be closed, thereby protecting the next operator.

N. Each grate shall be provided with a separate hold open arm, which will lock the grate in the 90-degree position once opened.

O. Each grate supplied with a locking device (for owner's padlock) that will prevent unauthorized entry to the confined space. The grating system will allow anyone to make visual inspection and float adjustments without entering the confined space.

P. Grate shall be coated with an OSHA type safety orange color, promoting visual awareness of the hazard. The aluminum safety grates shall receive a two-coat powder coat system, applied by the electrostatic spray process. The base coat is a thermosetting epoxy powder coat finish with a minimum thickness of 2 - 4 mils. The top coat is a mar-resistant, TGIC polyester powder coating with a minimum thickness of 2 - 4 mils. Each coat shall be baked at 350°F - 375°F until cured.

Q. Welding shall be in accordance with ANSI/AWS D1.2-90 Structural Welding Code for Aluminum.

2.03 MATERIAL SPECIFICATIONS

A. Aluminum material shall be 6061-T6 aluminum for bars, angles, and extrusions ¼-inch diamond plate shall be 5086 aluminum.

B. H-30 frame and cover shall be manufactured from ductile iron conforming to the requirements of ASTM-A536, and AASHTO M105 and M306. Gray Iron/Gray Cast Iron shall not be accepted as equal.

PART 3 – EXECUTION (NOT USED)

END OF SECTION

SECTION 06 1000 – ROUGH CARPENTRY

PART 1 – GENERAL

1.01 THE REQUIREMENT

A. Furnish and install rough carpentry in accordance with the Contract Documents.

1.03 SUBMITTALS

A. Submittals shall be furnished in accordance with Section 01 3300 – Submittal Procedures.

B. Furnish the ENGINEER with a certificate of inspection from the mill supplying dimension lumber stating that the lumber conforms to the graded specified according to standards set by the WWPA. Each piece of lumber shall have an approved WWPA grade identification stamp as identified in the most recently revised and published Grading Rules for Western Lumber. Regardless of grade stamp or certification, each piece of lumber in place in the structure shall be of the original grade specified or better; grade loss resulting from weathering, handling, storage, resaving, or dividing length, may be cause for rejection.

1.04 PRODUCT DELIVERY, STORAGE AND HANDLING

A. Carefully store all lumber delivered to the site off the ground in a manner to assure proper drainage, ventilation, and protection from the weather.

B. General:

1. Lumber: For each use, comply with the “American Softwood Lumber Standard” PS 20 by the U.S. Department of Commerce. Nominal sizes are shown or specified; provide actual sizes complying with the minimum size requirements of PS 20 for the moisture content specified for each use. All lumber to be S-Dry.
2. Plywood: Comply for each use, with the requirements of the U.S. Product Standard PS 1 for “Softwood Plywood/Construction and Industrial,” except as otherwise specified herein. Provide plywood of any PS 1 species classification group, except where particular species is shown or specified or where PS 1 limits groups for particular grade specified.

C. Coordination:

1. Obtain measurements and verify dimensions shown and shop drawing detail before proceeding with carpentry work whenever possible.
2. Correlate location of furring, nailers, blocking, grounds and similar supports so that attached work will comply with design requirements.
3. Fit carpentry work to other work. Scribe and cope as required for accurate fit.
4. Time delivery and installation of carpentry work to avoid delaying other trades whose work is dependent on or affected by the carpentry work and to comply with protection and storage requirements.
5. Examine all parts of the supporting structure and the conditions under which the carpentry work is to be installed, and notify the Architect in writing of any conditions detrimental to the proper and timely completion of the work.
6. Keep carpentry materials dry during delivery. Store lumber and plywood in stacks. Protect bottom of stacks against contact with damp or wet surfaces. Protect exposed materials against weather.
7. Do not store dressed or treated lumber or plywood outdoors.
8. Store materials for which maximum moisture content is specified only in areas where relative humidity has been reduced to a level where specified moisture content can be maintained.

PART 2 – PRODUCTS

2.01 MATERIAL

A. Framing Lumber: All framing lumber shall be of a grade and species per General Structural Notes.

B. Miscellaneous Lumber:
   1. Provide wood for support or attachment of other work such as cant strips, bucks, nailers, blocking, furring, grounds, stripping and similar members. Provide lumber of the sizes shown or specified, worked to shapes shown, and as follows:
   2. Moisture Content: 19% maximum for all lumber items not specified to receive wood preservatives treatment.
   3. Grade: Construction grade light framing size lumber of any species or board size lumber, as required. Provide construction grade boards (WCLIB) or No. 2 boards (WWPA).
   4. Concealed plywood interior standard grade, interior type.
   5. Backing panels for electrical or telephone equipment standard grade interior type plywood with exterior glue.

C. Anchorage and Fastening Materials: Select proper type, size, materials, and finish for each application. Comply with the following:
   1. Nails and staples: FS FF-N-105
   2. Wood Screws: ANSI B.18.6.1
   3. Bolts, hexagon and square: ANSI B.18.2.1
   4. Bolts, round head: ANSI B.18.5
   5. Nuts: FS FF-N-836
   6. Washers: FS FF-W-92
   7. Lag Screws or Lag Bolts: FS FF B-561
   8. Expansion Shields, Expansion Nails and Drive Screw Devices: FS FF-B-561
   9. Toggle Bolts: FS FF-B-588
   10. Bar or Strap Anchors: ASTM A625 zinc coated steel, 18-gauge minimum
   11. Metal Framing Connectors: Teco, Simpson or Kant Sag

D. Wood Preservative Treatment:
   1. Treat wood, including lumber and plywood, as specified herein to be treated, to comply with the applicable requirements of the AWPI.
   2. Pressure treat the following items with water borne preservatives for above-ground use, complying with the AWPB LP2:
   3. Wood cants, nailers, blocking stripping and similar members in connection with roofing, flashing, vapor barriers and waterproofing (except plywood sheathing).
   4. Wood sills, blocking, furring, stripping, and similar concealed members in contact with masonry or concrete or below grade. Foundation Grade redwood, grade marked, is acceptable for wood sills in lieu of treated lumber.

E. Fire Retardant Treatment: For all wood members (required by code) (noted) as fire retardant treated provide pressure impregnation with Dricon fire retardant chemicals in accordance with the recommendations and quality control of Koppers Co., Inc., or ENGINEER-approved equal to provide a UL FRS Fire Hazard Classification. All wood shall be identified with a UL label certifying this classification and the FM diamond.

PART 3 – EXECUTION

3.01 INSTALLATION

A. Use only sound, thoroughly seasoned, well manufactured materials of the longest practical lengths and sizes to minimize jointing.

B. Securely attach carpentry work to substrates by anchoring and fastening as shown and as required by recognized standards. Provide washers under bolt heads and nuts in contact with wood.

C. Nail plywood to comply with APA Recommendations.

D. Set carpentry work accurately to required levels and lines with members plumb and true and accurately cut and fitted.

E. Shim with metal or slate for full bearing on concrete or masonry substrates.

F. Attachment and Anchorage: Use common wire nails, except as otherwise shown or specified herein. Do not wax or lubricate fasteners that depend on friction for holding power. Select fasteners of size that will not penetrate members where opposite side will be exposed to view or will receive finish materials. Make tight connections between members. Install fasteners without splitting wood; pre-drill as required. Do not drive threaded friction type fasteners; turn into place. Tighten bolts and lag screws at installation and retighten as required for tight connections prior to closing in or at completion of work.

3.02 WOOD FRAMING INSTALLATION

A. All framing 16-inch o.c. unless otherwise noted.

B. Cut framing square on bearings, closely fit, accurately set to required lines and levels. Secure rigidly in place at bearings and connections. Do not use shims for leveling on wood or metal bearings. Use steel shims with full bearing on masonry or concrete substrates.

C. Anchor sole plates with ½-inch diameter anchor bolts at 48 inches and 72 inches o.c. embedded at least 7 inches into the concrete or reinforced masonry or 15 inches into unreinforced grouted masonry. There shall be a minimum of two (2) bolts per piece with one (1) bolt located within 12 inches of each end of each piece.

D. Frame members for passage of pipes and ducts to avoid cutting structural members. Do not cut, notch, or bore framing members for passage of pipes or conduits without Architect's permission. Reinforce framing members as directed where damaged by cutting. Provide Simpson NS nail stoppers over utilities that penetrate framing members, nailing with 8d nails.

E. Keep framing 2 inches away from chimneys, 4 inches from fireplace back walls. Firestop concealed spaces in framing not shut off by framing members. Use 2-inch-thick accurately fitted wood blocking to fill opening.

F. Joists and beams to be sizes and spacing as indicated. Set crown edge up with 3½ - ½-inch bearing unless otherwise noted. Toe nail joists to wood sills with nails both sides or with metal connectors. Lap and spike joists over supports. Double joists under all partitions. Double joists and rafters to form headers and trimmers at openings over 4 feet and support with metal joist hangers. Provide 3-inch firecut bevel where built into masonry. Provide blocking or suitable edge support between members as necessary to support edges of sheathing or sub-flooring.

G. Cross bridging is required at joists. Bridging to be 1-inch x 3-inch strips, beveled ends, double crossed, secured with 2 - 8d nails each and nailing bottom ends after sub-flooring is installed. Provide one row at spans to 10 feet, 2 rows at spans of 10 feet to 20 feet. Metal bridging such as Simpson NC is acceptable.

H. All studs 2-inch x 4-inch unless otherwise indicated. Provide double cap plates with joints staggered. Double studs at openings and triple at corners and intersections. Double headers with double trimmers over openings. Set studs directly over joists where possible. Provide blocking and backing as necessary. Provide mid-height blocking at all studs.

I. Provide corner bracing of 1-inch x 4-inch let into studs at exterior walls at close to 45-degree angle. Simpson (WB) (CWB) wall bracing may be used in lieu of wood corner bracing.

3.03 WOOD GROUNDS, NAILERS AND BLOCKING

A. Provide wherever shown and where required for screeding or attachment of other work. Form to shapes as shown and cut as required for true line and level of work to be attached.

B. Coordinate location with other work involved; refer to shop drawings of such work.

C. Attach to substrates securely with anchor bolts and other attachment devices as shown and as required to support applied loading. Countersink bolts and nuts flush with surfaces, unless otherwise shown.

D. Set true to line and level, plumb, with intersections true to required angle. Build into masonry as work progresses, cutting to fit masonry unit size involved. Anchor to formwork before concrete placement.

E. Provide grounds of dressed, preservative treated, key-beveled lumber not less than 1 to 1½-inch wide and of the thickness required to bring face of ground to exact thickness to finish material involved. Remove temporary grounds when no longer required.

3.04 WOOD FURRING

A. Install plumb and level with closure strips at all edges and openings. Shim with wood as required.

END OF SECTION

SECTION 07 2100 – THERMAL INSULATION

PART 1 - GENERAL

1.01 SECTION INCLUDES

A. Board insulation and integral vapor retarder at cavity wall construction, perimeter foundation wall, underside of floor slabs, over roof deck, over roof sheathing, and exterior wall.

B. Batt insulation and vapor retarder in exterior wall, ceiling, and roof construction.

C. Batt insulation for filling perimeter window and door shim spaces and crevices in exterior wall and roof.

1.02 REFERENCE STANDARDS

ASTM C240	Testing Cellular Glass Insulation Block
ASTM C518	Steady-State Thermal Transmission Properties by Means of the Heat Flow Meter Apparatus
ASTM C552	Cellular Glass Thermal Insulation
ASTM C578	Rigid, Cellular Polystyrene Thermal Insulation
ASTM C612	Mineral Fiber Block and Board Thermal Insulation
ASTM C665	Mineral-Fiber Blanket Thermal Insulation for Light Frame Construction and Manufactured Housing
ASTM C1289	Faced Rigid Cellular Polyisocyanurate Thermal Insulation Board
ASTM E84	Surface Burning Characteristics of Building Materials
ASTM E96/E96M	Water Vapor Transmission of Materials
ASTM E136	Behavior of Materials in a Vertical Tube Furnace At 750°C
ASTM E2357	Determining Air Leakage of Air Barrier Assemblies
FM DS 1-28	Wind Design; Factory Mutual Research Corporation
NFPA 285	Evaluation of Fire Propagation Characteristics of Exterior Non-Load-Bearing Wall Assemblies Containing Combustible Components

1.03 SUBMITTALS

A. See Section 01 3300 – Submittal Procedures, for submittal procedures.

B. Product Data: Provide data on product characteristics, performance criteria, and product limitations.

C. Manufacturer's Installation Instructions: Include information on special environmental conditions required for installation and installation techniques.

D. Manufacturer's Certificate: Certify that products meet or exceed specified requirements.

1.04 FIELD CONDITIONS

A. Do not install insulation adhesives when temperature or weather conditions are detrimental to successful installation.

PART 2 - PRODUCTS

2.01 APPLICATIONS

A. Insulation Under Concrete Slabs: Extruded polystyrene board.

B. Insulation at Perimeter of Foundation: Expanded polystyrene board.

C. Insulation Inside Masonry Cavity Walls: Extruded polystyrene board.

D. Insulation Inside Prefabricated Wall Panels: Extruded polystyrene board.

E. Insulation Over Metal Stud Framed Walls, Continuous: Extruded polystyrene board.

F. Insulation on Inside of Concrete and Masonry Exterior Walls: Fiber board.

G. Insulation in Metal Framed Walls: Batt insulation with integral vapor retarder.

H. Insulation in Wood Framed Walls: Batt insulation with separate vapor retarder.

I. Insulation in Wood Framed Ceiling Structure: Batt insulation with separate vapor retarder.

J. Insulation Above Lay-In Acoustical Ceilings: Batt insulation with no vapor retarder.

K. Insulation Over Roof Deck: Polyisocyanurate board.

2.02 FOAM BOARD INSULATION MATERIALS

A. Expanded Polystyrene (EPS) Board Insulation: ASTM C578, Type XI; with the following characteristics:
   1. Flame Spread Index: 25 or less, when tested in accordance with ASTM E84.
   2. Smoke Developed Index: 450 or less, when tested in accordance with ASTM E84.
   3. Complies with fire-resistance requirements shown on the drawings as part of an exterior non-load-bearing exterior wall assembly when tested in accordance with NFPA 285.
   4. Board Size: 48 x 96 inch.
   5. Board Thickness: 1-1/2 inches.
   6. Board Edges: Square.
   7. Water Absorption: 4 percent by volume, maximum.
   8. Board Density: 0.7 lb./cu ft.
   9. Compressive Resistance: 5 psi.
   10. Thermal Resistance: R-value of 3.1 per 1 inch at 75°F mean temperature.
   11. Manufacturers:
      a. AFM Corp
      b. Diversifoam Products
      c. Or ENGINEER-approved equal.

B. Termite-Resistant Expanded Polystyrene (EPS) Board Insulation: Complies with ASTM C578 with the following characteristics:
   1. Flame Spread Index: 25 or less, when tested in accordance with ASTM E84.
   2. Smoke Developed Index: 450 or less, when tested in accordance with ASTM E84.
   3. Board Size: 48 x 96 inches.
   4. Board Thickness: 2-1/2 inches.
   5. Thermal Resistance: R-value of 11, for overall thickness indicated.
   6. Board Edges: Square.
   7. Manufacturers:
      a. Nisus Corporation; Bora Foam
      b. Or ENGINEER-approved equal.

C. Extruded Polystyrene (XPS) Board Insulation: ASTM C578, Type XII; extruded polystyrene board with either natural skin or cut cell surfaces; with the following characteristics:
   1. Flame Spread Index: 25 or less, when tested in accordance with ASTM E84.
   2. Smoke Developed Index: 450 or less, when tested in accordance with ASTM E84.
   3. Complies with fire-resistance requirements shown on the drawings as part of an exterior non-load-bearing exterior wall assembly when tested in accordance with NFPA 285.
   4. Board Size: 48 x 96 inches.
   5. Board Thickness: 1-1/2 inches.
   6. Board Edges: Square.
   7. Thermal Resistance: R-value of 4.6 per 1 inch at 75°F mean temperature.
   8. Compressive Resistance: 15 psi.
   9. Board Density: 1.20 lb./cu ft.
   10. Water Absorption: 0.3 percent by volume, maximum.
   11. Manufacturers:
      a. Dow Chemical Co: www.dow.com.
      b. Pactiv Building Products: greenguard.pactiv.com.
      c. Or ENGINEER-approved equal.

D. Polyisocyanurate Board Insulation with Facers Both Sides: Rigid cellular foam, complying with ASTM C1289; Type I, aluminum foil both faces; Class 1, non-reinforced foam core.
   1. Flame Spread Index: 25 or less, when tested in accordance with ASTM E84.
   2. Smoke Developed Index: 450 or less, when tested in accordance with ASTM E84.
   3. Complies with fire-resistance requirements shown on the drawings as part of an exterior non-load-bearing exterior wall assembly when tested in accordance with NFPA 285.
   4. Compressive Strength: 16 psi
   5. Board Size: 48 x 96 inches.
   6. Board Thickness: 1 inch.
   7. Board Edges: Square.
   8. Manufacturers:
      a. Carlisle Coatings & Waterproofing, Inc; R2+ Matte
      b. Dow Chemical Co
      c. GAF
      d. Hunter Panels, LLC; H-Shield
      e. Hunter Panels, LLC; Xci Class A Foil
      f. Johns Manville; AP Foil-Faced
      g. Rmax Inc.; ECOMAXci
      h. Or ENGINEER-approved equal.

E. Composite Polyisocyanurate Board Insulation Faced with Plywood: Rigid cellular foam, complying with ASTM C1289; Type V, fire-retardant-treated plywood one face, glass fiber mat facer one face, Class 3.
   1. Flame Spread Index: 25 or less, when tested in accordance with ASTM E84.
   2. Smoke Developed Index: 450 or less, when tested in accordance with ASTM E84.
   3. Complies with fire-resistance requirements shown on the drawings as part of an exterior non-load-bearing exterior wall assembly when tested in accordance with NFPA 285.
   4. Compressive Strength: 25 psi
   5. Board Size: 48 x 96 inches.
   6. Plywood Thickness: 5/8-inch.

7. Insulation Board Thickness: 3 inches.
8. Thermal Resistance: R-value of 19.1.
9. Board Edges: Square.
10. Manufacturers:
    a. Hunter Panels, LLC; Xci Ply
    b. Or ENGINEER-approved equal.

F. Composite Ventilated Polyisocyanurate Board Insulation with Wood Spacers and Oriented Strand Board (OSB) or Plywood: Rigid cellular foam with 1-inch wood spacers between foam and OSB or plywood; complying with ASTM C1289, Type II.
1. Top Layer Material: 7/16-inch (11 mm) oriented strand board (OSB).
2. Complies with fire-resistance requirements shown on the drawings as part of an exterior non-load-bearing exterior assembly when tested in accordance with NFPA 285.
3. Compressive Strength: 20 psi
4. Board Size: 48 x 96 inches.
5. Composite Insulation Board Thickness: 6.0 inch.
6. Thermal Resistance: R-value of 28.1.
7. Board Edges: Square.
8. Manufacturers:
    a. Hunter Panels, LLC; Cool-Vent
    b. Or ENGINEER-approved equal.

G. Composite Polyisocyanurate Board Insulation Faced with Oriented Strand Board (OSB) or Plywood: Rigid cellular foam, complying with ASTM C1289; Type V, oriented strand board (OSB) one face, glass fiber mat face one side, Grade 2.
1. Top Layer Material: 7/16-inch (11 mm) oriented strand board (OSB).
2. Complies with fire-resistance requirements shown on the drawings as part of an exterior non-load-bearing exterior wall assembly when tested in accordance with NFPA 285.
3. Compressive Strength: 20 psi
4. Board Size: 48 x 96 inches nominal.
5. Composite Insulation Board Thickness: 4.5 inch.
6. Thermal Resistance: R-value of 25.6.
7. Board Edges: Square.
8. Manufacturers:
    a. Hunter Panels, LLC; H-Shield NB
    b. Or ENGINEER-approved equal.

H. Cellular Glass Board Insulation: ASTM C552, Type IV; cellular glass board, with the following characteristics:
1. Flame Spread Index: 5 or less, when tested in accordance with ASTM E84.
2. Smoke Developed Index: 0, when tested in accordance with ASTM E84.
3. Board Size: 18 x 24 inches
4. Board Thickness: 2 inches
5. Board Edges: Square.
6. Apparent Thermal Conductivity; K value at 0°F: 0.27.
7. Compressive Strength: Minimum 60 psi.
8. Water Absorption: In accordance with ASTM C240, 0.5 percent by volume maximum.
9. Facing: Factory applied skin of aluminum foil on both faces.

2.03 FIBER BOARD INSULATION MATERIALS

A. Where fiber board insulation is indicated, either glass fiber or mineral fiber board insulation may be used, at Contractor's option.

B. Glass Fiber Board Insulation: Rigid glass fiber, ASTM C612.
   1. Facing: None, unfaced.
   2. Flame Spread Index: 25 or less, when tested with facing, if any, in accordance with ASTM E84.
   3. Smoke Developed Index: 50 or less, when tested with facing, if any, in accordance with ASTM E84.
   4. Board Size: 48 x 48 inches
   5. Board Thickness: 1 inch.
   6. Board Edges: Square.
   7. Thermal Conductivity (k factor): 0.26.
   8. Maximum Density: 8.0 lb/cu ft.
   9. Combustibility: Except for facing, if any, non-combustible when tested in accordance with ASTM E136.
   10. Manufacturers:
      a. CertainTeed Corporation
      b. Johns Manville Corporation
      c. Owens Corning Corp
      d. Or ENGINEER-approved equal.

C. Mineral Fiber Board Insulation: Rigid or semi-rigid mineral fiber, ASTM C612 or C553; unfaced flame spread index of 0 (zero) when tested in accordance with ASTM E84.
   1. Where indicated, provide foil facing on one side; with flame spread index of 25 or less, when tested in accordance with ASTM E84.
   2. Where indicated, provide fiberglass reinforced polypropylene facing on one side; with flame spread index of 25 or less, when tested in accordance with ASTM E84.
   3. Where indicated, provide black, non-woven fiberglass facing on one side; with flame spread index of 25 or less, when tested in accordance with ASTM E84.
   4. Smoke Developed Index: 450 or less, when tested in accordance with ASTM E84.
   5. Board Size: 24 by 48 inches.
   6. Board Thickness: 1 inch.
   7. Thermal Resistance (R-value): 4.2°F sq ft/Btu at 75°F, minimum, when tested according to ASTM C518.
   8. Maximum Density: 8.0 lb/cu ft.
   9. Manufacturers:
      a. Johns Manville International, Inc.; MinWool Safing
      b. Thermafiber, Inc
      c. ROXUL, Inc; CavityRock DD
      d. Or ENGINEER-approved equal.

2.04 BATT INSULATION MATERIALS

A. Where batt insulation is indicated, either glass fiber or mineral fiber batt insulation may be used, at Contractor's option.

B. Glass Fiber Batt Insulation: Flexible preformed batt or blanket, complying with ASTM C665; friction fit.
   1. Flame Spread Index: 25 or less, when tested in accordance with ASTM E84.
   2. Smoke Developed Index: 450 or less, when tested in accordance with ASTM E84.
   3. Combustibility: Non-combustible, when tested in accordance with ASTM E136, except for facing, if any.

4. Formaldehyde Content: Zero.
5. Thermal Resistance: per plan
6. Thickness: per plan
7. Facing: Aluminum foil, flame spread 25 rated; one side.
8. Facing: Aluminum foil, one side.
9. Manufacturers:
    a. CertainTeed Corporation
    b. Johns Manville Corporation
    c. Owens Corning Corp
    d. Or ENGINEER-approved equal.

C. Mineral Fiber Batt Insulation: Flexible or semi-rigid preformed batt or blanket, complying with ASTM C665; friction fit; unfaced flame spread index of 0 (zero) when tested in accordance with ASTM E84.
1. Where indicated, provide foil facing on one side; with flame spread index of 25 or less, when tested in accordance with ASTM E84.
2. Smoke Developed Index: 0 (zero), when tested in accordance with ASTM E84.
3. Thermal Resistance: per plan
4. Thickness: per plan
5. Manufacturers:
    a. Johns Manville International, Inc.; MinWool Sound Attenuation Fire Batts
    b. Thermafiber, Inc
    c. ROXUL, Inc; ComfortBatt
    d. ROXUL, Inc; Roxul AFB
    e. Or ENGINEER-approved equal.

2.05 ACCESSORIES

A. Sheet Vapor Retarder: Black polyethylene film for above grade application, 10 mil thick.

B. Tape: Bright aluminum self-adhering type, mesh reinforced, 2 inches wide.

C. Tape joints of rigid insulation in accordance with roofing and insulation manufacturers' instructions.

D. Insulation Fasteners: Impaling clip of unfinished steel with washer retainer and clips, to be adhered to surface to receive insulation, length to suit insulation thickness and substrate, capable of securely and rigidly fastening insulation in place.

E. Insulation Fasteners: Appropriate for purpose intended and approved by roofing manufacturer.
1. Length as required for thickness of insulation material and penetration of deck substrate, with metal washers.

F. Nails or Staples: Steel wire; electroplated or galvanized; type and size to suit application.

G. Wire Mesh: Galvanized steel, hexagonal wire mesh.

H. Protection Board for Below Grade Insulation: Cementitious, ¼-inch thick.

I. Adhesive: Type recommended by insulation manufacturer for application.

PART 3 - EXECUTION

3.01 EXAMINATION

A. Verify that substrate, adjacent materials, and insulation materials are dry and that substrates are ready to receive insulation and adhesive.

B. Verify substrate surfaces are flat, free of honeycomb, fins, irregularities, or materials or substances that may impede adhesive bond.

3.02 BOARD INSTALLATION AT FOUNDATION PERIMETER

A. Adhere a 6-inch-wide strip of polyethylene sheet over construction, control, and expansion joints with double beads of adhesive each side of joint.
   1. Tape seal joints.
   2. Extend sheet full height of joint.

B. Apply adhesive to back of boards:
   1. Three continuous beads per board length.
   2. Full bed 1/8-inch thick.

C. Install boards horizontally on foundation perimeter.
   1. Place boards to maximize adhesive contact.
   2. Install in running bond pattern.
   3. Butt edges and ends tightly to adjacent boards and to protrusions.

D. Extend boards over expansion joints, unbonded to foundation on one side of joint.

E. Cut and fit insulation tightly to protrusions or interruptions to the insulation plane.

F. Immediately following application of board insulation, place protective boards over exposed insulation surfaces.
   1. Apply adhesive in five continuous beads per board length.
   2. Install boards horizontally from base of foundation to top of insulation.
   3. Butt boards tightly, with joints staggered from insulation joints.

3.03 BOARD INSTALLATION AT EXTERIOR WALLS

A. Adhere a 6-inch-wide strip of polyethylene sheet over expansion joints with double beads of adhesive each side of joint.
   1. Tape seal joints between sheets.
   2. Extend sheet full height of joint.

B. Apply adhesive to back of boards:
   1. Three continuous beads per board length.
   2. Full bed 1/8-inch thick.

C. Install rigid insulation directly to steel studs or exterior grade sheathing at 16 inches on center with manufacturer recommended mechanical fasteners. Tape all joints with manufacturer's minimum 4-inch-wide sealant tape; comply with ASTM E2357.

D. Install boards horizontally on walls.
   1. Place boards to maximize adhesive contact.
   2. Install in running bond pattern.
   3. Butt edges and ends tightly to adjacent boards and to protrusions.

E. Extend boards over expansion joints, unbonded to wall on one side of joint.

F. Cut and fit insulation tightly to protrusions or interruptions to the insulation plane.

G. Place 6-inch-wide polyethylene sheet at perimeter of wall openings, from adhesive vapor retarder bed to window and door frames. Tape seal in place to ensure continuity of vapor retarder and air seal.

H. Tape insulation board joints.

3.04 BOARD INSTALLATION AT CAVITY WALLS

A. Secure impale fasteners to substrate at a frequency as follows:

1. 6 per insulation board.

B. Adhere a 6-inch-wide strip of polyethylene sheet over expansion joints with double beads of adhesive each side of joint.
   1. Tape seal joints between sheets.
   2. Extend sheet full height of joint.

C. Install boards to fit snugly between wall ties.
   1. Place membrane surface against adhesive.
   2. Place membrane surface facing out, and tape seal board joints.

D. Install boards horizontally on walls.
   1. Place boards to maximize adhesive contact.
   2. Install in running bond pattern.
   3. Butt edges and ends tightly to adjacent boards and to protrusions.
   4. Place impale fastener locking discs.

E. Cut and fit insulation tightly to protrusions or interruptions to the insulation plane.

F. Place 6 inch wide polyethylene sheet at perimeter of wall openings, from adhesive vapor retarder bed to window and door frames. Tape seal in place to ensure continuity of vapor retarder and air seal.

3.05 BOARD INSTALLATION UNDER CONCRETE SLABS

A. Place insulation under slabs on grade after base for slab has been compacted.

B. Cut and fit insulation tightly to protrusions or interruptions to the insulation plane.

C. Prevent insulation from being displaced or damaged while placing vapor retarder and placing slab.

3.06 BOARD INSTALLATION OVER LOW SLOPE ROOF DECK

A. Board Installation Over Roof Deck, General:
   1. See applicable roofing Specification Section for specific board installation requirements.
   2. Ensure vapor retarder is clean and dry, continuous, and ready for application of roofing system.
   3. Fasten insulation to deck in accordance with roofing manufacturer's written instructions and applicable Factory Mutual requirements.
   4. Do not apply more insulation than can be covered with roofing in same day.

3.07 BATT INSTALLATION

A. Install insulation and vapor retarder in accordance with manufacturer's instructions.

B. Install in exterior wall and roof spaces without gaps or voids. Do not compress insulation.

C. Trim insulation neatly to fit spaces. Insulate miscellaneous gaps and voids.

D. Fit insulation tightly in cavities and tightly to exterior side of mechanical and electrical services within the plane of the insulation.

E. Install with factory applied vapor retarder membrane facing warm side of building spaces. Lap ends and side flanges of membrane over framing members.

F. Staple or nail facing flanges in place at maximum 6 inches on center.

G. Tape insulation batts in place.

H. Retain insulation batts in place with wire mesh secured to framing members.

I. Tape seal butt ends, lapped flanges, and tears or cuts in membrane.

J. At wood framing, place vapor retarder on warm side of insulation by stapling at 6 inches on center. Lap and seal sheet retarder joints over member face.

K. At metal framing, place vapor retarder on warm side of insulation; lap and seal sheet retarder joints over member face.

L. Tape seal tears or cuts in vapor retarder.

M. Extend vapor retarder tightly to full perimeter of adjacent window and door frames and other items interrupting the plane of the membrane. Tape seal in place.

3.08 PROTECTION

A. Do not permit installed insulation to be damaged prior to its concealment.

END OF SECTION

SECTION 07 5400 – THERMOPLASTIC MEMBRANE ROOFING

GENERAL

1.01 SECTION INCLUDES

A. Mechanically attached PVC thermoplastic single-ply roofing system.

B. Fully adhered PVC thermoplastic single-ply roofing system.

C. Roof insulation.

D. Flashing accessories.

E. Edgings and terminations.

1.02 REFERENCES

A. American Society of Civil Engineers (ASCE) - ASCE 7 - Minimum Design Loads for Buildings and Other Structures, Current Revision.

B. ASTM International (ASTM):
   1. ASTM C 208 - Standard Specification for Cellulosic Fiber Insulating Board.
   2. ASTM C 578 - Standard Specification for Rigid, Cellular Polystyrene Thermal Insulation.
   3. ASTM C 1289 - Standard Specification for Faced Rigid Cellular Polyisocyanurate Thermal Insulation Board.
   4. ASTM D 4263 - Standard Test Method for Indicating Moisture in Concrete by the Plastic Sheet Method.
   5. ASTM D 4434 - Standard Specification for Poly (Vinyl Chloride) Sheet Roofing.
   6. ASTM E 96 - Standard Test Methods for Water Vapor Transmission of Materials.

C. Factory Mutual (FM Global):
   1. Approval Guide.
      a. Factory Mutual Standard 4470 - Approval Standard for Class 1 Roof Covers.
      b. Loss Prevention Data Sheets 1-28, 1-29.

D. 2018 International Building Code (or other locally adopted Building Code)

E. National Roofing Contractors Association (NRCA) - Low Slope Roofing and Waterproofing Manual, Current Edition.

F. Sheet Metal and Air Conditioning Contractors National Association, 1nc. (SMACNA) - Architectural Sheet Metal Manual.

G. Underwriters Laboratories (UL):
   1. TGFU R1306 - "Roofing Systems and Materials Guide".
   2. UL-790 - Standard Test Method for Fire Tests of Roof Coverings.

1.03 DESIGN CRITERIA

A. Wind Uplift Performance:
   1. Roof system is designed to withstand wind uplift forces as calculated using the current revision of ASCE-7.
   2. Roof system is designed to achieve a FM DS 1-29 Field Wind Uplift of 60 psf, a Perimeter Wind Uplift of 75 psf and a Corner Wind Uplift of 120 psf. See also General Structural Notes.

B. Fire Resistance Performance:
   1. Roof system will achieve a UL Class A rating when tested in accordance with UL-790.

C. Thermal Performance: Roof system will achieve a minimum R value not less than 30.

D. Drainage: Provide a roof system with positive drainage where all standing water dissipates within 48 hours after precipitation ends.

E. Building Codes:
   1. Roof system will meet the requirements of all federal, state and local code bodies having jurisdiction.

1.04 SUBMITTALS

A. Submit under provisions of Section 01 3300 – Submittal Procedures.

B. Product Data: Manufacturer's data sheets on each product to be used, including:
   1. Preparation instructions and recommendations.
   2. Storage and handling requirements and recommendations.
   3. Installation methods.

C. Detail Drawings:
   1. Submit approved plan, section, elevation or isometric drawings which detail the appropriate methods for all flashing conditions found on the project.
   2. Coordinate approved drawings with locations found on the Contract Drawings.

1.05 QUALITY ASSURANCE

A. Manufacturer Qualifications: All primary products specified in this section will be supplied by a single manufacturer.

1.06 DELIVERY, STORAGE, AND HANDLING

A. Store products in manufacturer's unopened packaging until ready for installation.

B. Store and dispose of hazardous materials, and materials contaminated by hazardous materials, in accordance with requirements of local authorities having jurisdiction.

1.07 PROJECT CONDITIONS

A. Proceed with roofing work only when weather conditions are in compliance with the manufacturer’s recommended limitations, and when conditions will permit the work to proceed in accordance with the manufacturer’s requirements and recommendations.

B. Proceed with work so new roofing materials are not subject to construction traffic. When necessary, new roof sections shall be protected and inspected upon completion for possible damage.

C. Provide protection, such as 3/4 inch thick plywood, for all roof areas exposed to traffic during construction. Plywood must be smooth and free of fasteners and splinters.

D. The surface on which the insulation or roofing membrane is to be applied shall be clean, smooth, dry, and free of projections or contaminants that would prevent proper application of or be incompatible with the new installation, such as fins, sharp edges, foreign materials, oil and grease.

E. New roofing shall be complete and weather tight at the end of the work day.

F. Contaminants such as grease, fats and oils shall not be allowed to come in direct contact with the roofing membrane.

G. When positioning membrane sheets, exercise care to locate all field splices away from low spots and out of drain sumps. All field splices should be shingled to prevent bucking of water.

1.08 WARRANTY

A. At project closeout, provide to Owner or Owners Representative an executed copy of the manufacturer's Total System warranty, outlining its terms, conditions, and exclusions from coverage.

PART 2 -PRODUCTS

2.01 MANUFACTURERS

A. Acceptable Manufacturer: Carlisle SynTec Systems,

B. Or equal

2.02 SCOPE / APPLICATION

A. Roof System: Provide a waterproof roof system, capable of withstanding uplift forces as specified in this section.
   1. Membrane Attachment: Fully Adhered.

B. Insulation: Provide a roof insulation system beneath the finish membrane.

2.03 MEMBRANE ATTACHMENT: FULLY ADHERED

A. Sure-Flex FRS PVC Membrane as manufactured by Carlisle SynTec, or equal
   1. Membrane consists of Fiberglas Reinforced Scrim that is encapsulated between the PVC based top and bottom plies. The combination of the fabric and PVC plies provide Sure-Flex FRS PVC membranes with high breaking strength, tearing strength, and puncture resistance.
   2. Color: White.
   3. Membrane Thickness: 80 mil nominal.
      a. Thickness over Scrim (ASTM D 4434): 0.025 inches (0.635mm) minimum.
      b. Tensile Strength (ASTM D 638): 1500 psi (110.4 MPa) minimum.
      c. Tear Resistance (ASTM D 1004): 10 lbf (45 N) minimum.
      d. Elongation at Break (ASTM D 638): 250 percent minimum machine direction. 220 percent minimum cross machine direction.
      e. Field Sheet Width: 120 inches (3048 mm) maximum.
      f. Length: 65 feet (19.8 m) maximum.

2.04 INSULATION

A. Polyisocyanurate: A foam core insulation board covered on both sides with a medium weight fiber reinforced felt facer meeting ASTM C 1289, Type II, Class 1. Carlisle HP-H.
   1. Compressive Strength: Grade 2 (20 psi) (138 kPa).

2.05 INSULATION ADHESIVE

A. FAST 100 or 100 LV Adhesive: A spray or extruded applied, two-component polyurethane, low-rise expanding foam adhesive used for attaching approved insulations to compatible substrates (concrete, cellular lightweight insulating concrete, gypsum, cementitious wood fiber, wood or steel) or existing smooth or gravel surfaced BUR, modified bitumen or cap sheets.

B. FAST 100 Catalyst: Added to FAST Adhesive (Part B Side) to quicken adhesive reaction time.

C. FAST Dual Cartridge Adhesive: A two-component, polyurethane construction grade, low-rising expanding adhesive designed for bonding insulation to various substrates using a portable applicator.

D. OlyBond 500 BA - A two-component, polyurethane, low-rise expanding adhesive used to bond insulation to various substrates using a mechanical dispenser system.

E. OlyBond Spot Shot - A two-component, polyurethane construction grade, low-rising expanding adhesive designed for bonding insulation to various substrates using a portable applicator.

2.06 FLASHING ACCESSORIES

A. Sure-Flex PVC Inside Corners: Pre-molded corner flashing for inside corners. 80 mil thickness.
   1. Color: White.

B. Sure-Flex PVC Outside Corners: Pre-molded corner flashing for outside corners. 80 mil thickness.
   1. Color: White.

C. Sure-Flex PVC T-Joint Covers: 40 mil thick non-reinforced PVC flashing cut into a 4.5 inch (114mm) diameter circle used to seal step-offs at splice intersections.
   1. Color: White.

D. Sure-Flex PVC Molded Pipe Flashings: A pre-molded flashing and clamping ring used for pipe penetrations. Available for 1 inch to 6 inch (25 to 152mm) diameter pipes.

E. Sure-Flex PVC Split Pipe Seals: Pre-fabricated flashing consisting of 60 mil thick reinforced Sure-Flex Membrane for pipes 1 inch to 6 inch (25 to152mm) in diameter. A split (cut) and overlap tab are incorporated to allow the pipe seal to be opened and wrapped around the pipe when it is not possible to pull a standard pipe flashing over a round penetration.

F. Sure-Flex PVC Square Tubing Wraps: Fabricated flashings made of 60 mil thick reinforced Sure-Flex membrane for square tubing. A split (cut) and overlap tab are incorporated into these parts to allow the seals to be opened and wrapped around a square penetration. Available for 3 inches, 4 inches and 6 inches (76, 102, 152 mm) diameter square tubing.

G. Sure-Flex PVC Molded Sealant Pockets:
   1. Pre-fabricated, interlocking, 2-piece, injection molded, flexible pocket with a rigid polypropylene vertical wall and pre-formed deck flanges.
   2. Use in conjunction with Thermoplastic One-Part Pourable Sealer as specified in this section for waterproofing pipe clusters or other odd shaped penetrations. Forms a 7-1/2 inches by 6 inches (191 x 152mm) oval when completed. Available in white only.

H. PVC Overlayment Strip: Manufacturer's standard PVC overlayment strip.

I. Sure-Flex PVC Non-Reinforced Flashing: 80 mil thick rolls 12 inches (305 mm) and 24 inches 610 mm) wide. Used for inside/outside corners and field fabricated pipe flashings when use of pre-molded accessories is not feasible.

J. PVC Contour Rib Profile: Extruded PVC profile measuring 1-1/4 inches tall and 2-1/8 inches wide (32 mm by 54 mm) including the welding flanges while the vertical profile is 3/8 inch (9.5 mm) thick. Available in 10 feet (3048 mm) lengths.

2.07 CLEANERS, PRIMERS, ADHESIVES AND SEALANTS

A. Low VOC PVC Bonding Adhesive: A high-strength solvent based adhesive that allows bonding of PVC and KEE-enhanced PVC membrane to various porous and non-porous substrates.

B. Sure-Flex PVC Cut Edge Sealant: Free flowing, clear sealant designed for sealing cut edges of Sure-Flex reinforced membrane.

C. Water Cut-Off Mastic: A one-component, low viscosity, self wetting, Butyl blend mastic used as a compression sealing agent between membrane and applicable substrates.

D. White One-Part Pourable Sealer: Manufacturer's recommended product.

E. CCW 702 Primer: Manufacturer's recommended product.

F. Cav-Grip: Manufacturer's recommended product.

G. Universal Single-Ply Sealant: A 100 percent solids, solvent free, one-part polyether sealant that is used as a termination bar sealant. Available in white only.

H. PVC Membrane Cleaner: Clear, solvent-based cleaner used to loosen and remove contaminants from the surface of exposed membrane.

2.08 EDGINGS AND TERMINATIONS

A. SecurEdge 200: A snap-on edge system consisting of a 24 gauge galvanized metal water dam. Finish as noted on the Finish Schedule of the Contract Drawings.

PART 3 -EXECUTION

3.01 EXAMINATION

A. Do not begin installation until substrates have been properly prepared.

B. If substrate preparation is the responsibility of another installer, notify Architect of unsatisfactory preparation before proceeding.

3.02 PREPARATION

A. Clean surfaces thoroughly prior to installation.

B. Prepare surfaces using the methods recommended by the manufacturer for achieving the best result for the substrate under the project conditions.

C. Do not commence Work until all other work trades have completed jobs that require them to traverse the deck on foot or with equipment.

D. A vapor retarder / temporary roof (Carlisle 725 TR Air & Vapor Barrier/Temporary Roof) may be applied to protect the inside of the structure prior to the roof system installation.

3.03 SUBSTRATE PREPARATION

A. Steel Deck:

1. Metal decks shall be a minimum uncoated thickness of 22 gauge and have a G-90 galvanized finish on all panels.

2. Decks must comply with the gauge and span requirements in the current Factory Mutual Approval Guide and be installed in accordance with Loss Prevention Data Sheet 1-28 or specific FM approval.

3. Remove any surface corrosion and repair severely corroded areas. Properly fasten loose or inadequately secured decking.

3.04 INSULATION - SYSTEM DESIGN

A. Base Layer:

1. Type: InsulBase Polyisocyanurate HP-H.

2. Thickness: 4.0 inches.

3. Attachment Method: Fasteners with plates and adhesive.

B. Top Layer:

1. Type: InsulBase Polyisocyanurate HP-H.

2. Thickness: 2.0 inches.

3. Attachment Method: Fasteners with plates and adhesive.

3.05 INSULATION PLACEMENT

A. Install insulation or membrane underlayment over the substrate with boards butted tightly together with no joints or gaps greater than 1/4 inch (6 mm). Stagger joints both horizontally and vertically if multiple layers are provided.

B. Secure insulation to the substrate with the required mechanical fasteners or insulation adhesive in accordance with the manufacturer's current application guidelines.

C. Do not install wet, damaged or warped insulation boards.

D. Stagger joints in one direction unless joints are to be taped. Install insulation boards snug. Gaps between board joints shall not exceed 1/4 inch (6 mm). Fill all gaps in excess of 1/4 inch (6 mm) with same insulation material.

E. Wood nailers must be at least 3 1/2 inches (89 mm) wide or 1 inch (25 mm) wider than adjacent metal flange. Thickness must equal that of insulation but not less than 1 inch (25 mm) thickness.

F. Miter and fill the edges of the insulation boards at ridges, valleys and other changes in

plane to prevent open joints or irregular surfaces. Avoid breaking or crushing of the insulation at the corners.

G. Do not install any more insulation than will be completely waterproofed each day.

3.06 INSULATION ATTACHMENT

A. Securely attach insulation to the roof deck for Adhered or Mechanically Fastened Roofing Systems. Attachment must have been successfully tested to meet or exceed the calculated uplift pressure required by the Building Code or ANSI/SPRI WD-1.

B. Enhance the perimeter and corner areas in accordance with the Building Code or ANSI/SPRI WD-1.

C. Install insulation layers applied with adhesive, coverage rate as necessary to achieve the specified attachment and uplift rating. Press each board firmly into place after adhesive develops strings when touched, typically 1-1/2 to 2 minutes after adhesive was applied, and roll with a weighted roller. Add temporary weight and use relief cuts to ensure boards are well adhered. Stagger the joints of additional layers by a minimum of 6 inches (152 mm).

3.07 MEMBRANE PLACEMENT AND ATTACHMENT (Fully Adhered)

A. Position Sure-Flex membrane over the acceptable substrate. Fold membrane sheet back lengthwise so half the underside of the membrane is exposed.

B. Apply Sure-Flex Bonding Adhesive in accordance with the manufacturer's published instructions, to the exposed underside of the membrane and the corresponding substrate area. Do not apply Bonding Adhesive along the splice edge of the membrane to be hot air welded over the adjoining sheet. Allow the adhesive to dry until it is tacky but will not string or stick to a dry finger touch.

1. Roll the coated membrane into the coated substrate while avoiding wrinkles. Brush down the bonded section of the membrane sheet immediately after rolling the membrane into the adhesive with a soft bristle push broom to achieve maximum contact.
2. Fold back the unbonded half of the sheet lengthwise and repeat the bonding procedures.

C. Position adjoining sheets to allow a minimum overlap of 2 inches (51mm).

D. Hot-air weld the Sure-Flex membrane sheets using the Automatic Hot Air Welding Machine or Hot Air Hand Welder in accordance with the manufacturer's hot air welding procedures.

E. Continue to install adjoining membrane sheets in the same manner, overlapping edges a minimum of 2 inches (51mm) and complete the bonding procedures as stated previously.

3.08 SEAM WELDING

A. Hot-air weld membrane using an Automatic Hot Air Welding Machine or Hot Air Hand Welder in accordance with the manufacturer's current guidelines. At all splice intersections, roll the seam with a silicone roller to ensure a continuous hot air welded seam.

B. Probe all seams once the hot air welds have thoroughly cooled (approximately 30 minutes).

C. Repair all seam deficiencies the same day they are discovered.

D. Apply Cut Edge Sealant on all cut edges of reinforced membrane (where the scrim reinforcement is exposed) after seam probing is complete. Cut Edge Sealant is not required but recommended on flat surfaces and is not required on vertical splices.

3.09 FLASHING

A. Flashing of parapets, curbs, expansion joints and other parts of the roof must be performed using Sure-Flex reinforced membrane. Sure-Flex non-reinforced membrane may be used for flashing pipe penetrations, Sealant Pockets, and scuppers, as well as inside and outside corners, when the use of pre-molded accessories is not feasible.

B. Follow manufacturer's typical flashing procedures for all wall, curb, and penetration flashing including metal edging/coping and roof drain applications.

3.10 DAILY SEALS

A. On phased roofing, when the completion of flashings and terminations is not achieved by the end of the work day, a daily seal must be performed to temporarily close the membrane to prevent water infiltration.

B. Complete an acceptable membrane seal in accordance with the manufacturer's requirements.

3.11 CLEAN UP

A. Perform daily clean-up to collect all wrappings, empty containers, paper, and other debris from the project site. Upon completion, all debris must be disposed of in a legally acceptable manner.

B. Prior to the manufacturer's inspection for warranty, the applicator must perform a pre-inspection to review all work and to verify all flashing has been completed as well as the application of all caulking.

3.12 PROTECTION

A. Protect installed products until completion of project.

B. Touch-up, repair or replace damaged products before Substantial Completion.

END OF SECTION

SECTION 07 6100 – SHEET METAL ROOFING

PART 1 – GENERAL

1.01 SECTION INCLUDES

A. Sheet metal roofing, associated flashings, and underlayment.

B. Counterflashings.

C. Gutters and downspouts.

D. Snow guards.

E. Integral fascias.

1.02 REFERENCE STANDARDS

A. American Architectural Manufacturer's Association (AAMA): www.aamanet.org:
   1. AAMA 621 - Voluntary Specifications for High Performance Organic Coatings on Coil Coated Architectural Hot Dipped Galvanized (HDG) & Zinc-Aluminum Coated Steel Substrates.
   2. AAMA 809.2 - Voluntary Specification Non-Drying Sealants.

B. American Society of Civil Engineers (ASCE): www.asce.org/codes-standards:
   1. ASCE 7 - Minimum Design Loads for Buildings and Other Structures.

C. ASTM International (ASTM): www.astm.org:

A653	Steel Sheet, Zinc-Coated (Galvanized) or Zinc-Iron Alloy-Coated (Galvannealed) by the Hot-Dip Process.
A755	Steel Sheet, Metallic Coated by the Hot-Dip Process and Prepainted by the Coil-Coating Process for Exterior Exposed Building Products.
A792/A792M	Steel Sheet, 55 % Aluminum-Zinc Alloy-Coated by the Hot-Dip Process.
C645	Nonstructural Steel Framing Members.
C754	Installation of Steel Framing Members to Receive Screw-Attached Gypsum Panel Products.
C920	Elastomeric Joint Sealants.
A980	Steel, Sheet, Carbon, Ultra High Strength Cold Rolled.
D1003	Haze and Luminous Transmittance of Transparent Plastics.
D2244	Calculation of Color Differences from Instrumentally Measured Color Coordinates.
D4214	Evaluating Degree of Chalking of Exterior Paint Films.
E283	Determining Rate of Air Leakage Through Exterior Windows, Curtain Walls, and Doors Under Specified Pressure Differences Across the Specimen.
E331	Water Penetration of Exterior Windows, Skylights, Doors, and Curtain Walls by Uniform Static Air Pressure Difference
E1646	Water Penetration of Exterior Metal Roof Panel Systems by Uniform Static Air Pressure Difference.
E1680	Rate of Air Leakage Through Exterior Metal Roof Panel Systems.
E1980	Calculating Solar Reflectance Index of Horizontal and Low-Sloped Opaque Surfaces.

1.03 ADMINISTRATIVE REQUIREMENTS

A. Preinstallation Meeting: Convene one week before starting work of this section.

1.04 SUBMITTALS

A. See Section 01 3300 – Submittal Procedures.

B. Shop Drawings: Indicate material profile, jointing pattern, jointing details, fastening methods, flashings, terminations, and installation details.

C. Product Data: Provide data on metal types, finishes, and characteristics.

1.05 QUALITY ASSURANCE

A. Perform work in accordance with SMACNA Architectural Sheet Metal Manual requirements and standard details, except as otherwise noted.
   1. Maintain one copy on project site.

1.06 DELIVERY, STORAGE, AND HANDLING

A. Stack material to prevent twisting, bending, or abrasion, and to provide ventilation. Slope metal sheets to ensure drainage.

B. Prevent contact with materials that could cause discoloration or staining.

1.07 WARRANTY

A. Correct defective Work within a five year period after Date of Substantial Completion. Defective work includes degradation of metal finish.

PART 2 – PRODUCTS

2.01 SHEET MATERIALS

A. PBR Roof Panel
   1. PBR Panel: A through-fastened sidewall panel with 1 1/4 inch (32mm) ribs at 12 inches (305mm) on center. The area between the ribs is reinforced to minimize oil-canning. Reverse roll optional.
   2. Gauge: 26.
   3. Dimensions: 36 inches (915mm) wide by 1 1/4 inch (32mm) high.

B. Standing Seam Metal Roof
   1. Material: Steel conforming to ASTM A792.
      a. 24 Gauge: Yield strength 50,000 psi; with aluminum-zinc alloy coating conforming to ASTM A792, Class AZ50.
   2. Panel Width and Pattern:
      b. 12” or 16” panel width.
   3. Panel Seam Height: 1.25 - 2 inches.
   4. Panel Finish: Provide primer and top finish coat on exposed faces; provide primer and backer coat on concealed faces of panels.
      a. Panel Color: To be selected by Owner
   5. Seam Sealant: The factory applies high-grade butyl mastic sealant within the confines of the panel’s female leg, designed to seal against the adjacent male panel leg.
   6. Clips: Provide clip designed to allow panels to thermally expand and contract. Clip shall incorporate a self-centering feature to allow 1 inch of movement in both directions along panel length. Clip type shall be selected to meet positive and negative pressures as specified. Factory-installed sealant to provide continuity of seal at clip locations

7. Bearing plate, if required, shall be designed with tabs to attached clip base to bearing plate on the ground, prior to installation.
8. Fasteners: As recommended by manufacturer for performance indicated.
9. Trims and Flashings: Material, metal thickness, and finish to match panels. Profiles indicated in Drawings.
    a. Provide manufacturer's standard accessories and other items essential to completeness of standing seam roof installation.
    b. Panel Penetration Flashings: As recommended by panel manufacturer; designed to provide sufficient movement to prevent creation of points of fixity at penetrations.
10. Manufacturer: AEP Span-Lok, ABC Lokseam or approved equal.

2.02 ACCESSORIES

A. Fasteners: Galvanized steel, with soft neoprene washers.

B. Underlayment: Synthetic non-asphaltic sheet, intended by manufacturer for mechanically fastened roofing underlayment without sealed seams.
    1. Type: Woven polypropylene with anti-slip polyolefin coating on both sides.
    2. Minimum Requirements: Comply with requirements of ICC-ES AC188 for non-self-adhesive sheet.
    3. Self Sealability: Passing nail sealability test specified in ASTM D1970.
    4. Flammability: Minimum of Class A, when tested in accordance with ASTM E108.
    5. Ultraviolet Resistance and Weatherability: Approved in writing by manufacturer for exposure to weather for minimum of 12 months.
    6. Low Temperature Flexibility: Passing test specified in ASTM D1970.
    7. Water Vapor Permeance: Vapor retarder; maximum of 0.1 perm, when tested in accordance with ASTM E96/E96M Procedure A (desiccant method).
    8. Fasteners: As specified by manufacturer and building code qualification report or approval, if any.

C. Underlayment: 6 mil polyethylene.

D. Slip Sheet: Rosin sized building paper.

E. Primer: Zinc molybdate type.

F. Protective Backing Paint: Zinc molybdate alkyd.

G. Sealant: As required by manufacturer.

H. Plastic Cement: ASTM D4586, Type I.

I. Eave Protection Sheet: Rubberized asphalt bonded to sheet polyethylene, 40 mil total thicknesses, with strippable treated release paper

J. Reglets: Surface mounted type, same material as roofing sheets; face and ends covered with plastic tape.

K. Solder: ASTM B32; Sn50 (50/50) type.

L. Splash Pads: Precast concrete type, of sizes and profiles indicated; minimum 3000 psi at 28 days, with minimum 5 percent air entrainment.

2.03 FABRICATION

A. Form sections true to shape, accurate in size, square, and free from distortion or defects.

B. Fabricate cleats of same material as sheet, same gage as roofing sheet.

C. Fabricate starter strips, interlockable with sheet.

D. Form pieces in longest practical lengths.

E. Hem exposed edges on underside 1/2 inch; miter and seam corners.

F. Form material with standing seams, except where otherwise indicated. At moving joints, use sealed lapped, bayonet-type or interlocking hooked seams.

G. Tin edges of copper sheet to be soldered. Solder shop formed metal joints. After soldering, remove flux. Wipe and wash solder joints clean. Weather seal joints.

H. Fabricate corners from one piece with minimum 18 inch long legs; seam for rigidity, seal with sealant.

I. Fabricate vertical faces with bottom edge formed outward 1/4 inch and hemmed to form drip.

J. Fabricate flashings to allow toe to extend 2 inches over roofing gravel. Return and brake edges.

K. Fabricate snow guards in accordance with SMACNA.

2.04 FACTORY FINISHING

A. Clear Anodized Finish: AAMA 611 AA-M12C22A41 Class I clear anodic coating not less than 0.7 mils thick.

B. Color Anodized Finish: AAMA 611 AA-M12C22A42/44 Class I integrally or electrolytically colored anodic coating not less than 0.7 mils thick.

C. Modified Silicone Polyester Coating: Pigmented Organic Coating System, AAMA 2603; baked enamel finish system.

D. Fluoropolymer Coating: High Performance Organic Finish, AAMA 2604; multiple coat, thermally cured fluoropolymer finish system.

E. PVDF (Polyvinylidene Fluoride) Coating: Superior Performance Organic Finish, AAMA 2605; multiple coat, thermally cured fluoropolymer finish system.

F. Color: As shown on drawings.

G. Primer Coat: On coated sheets, finish concealed side of sheet with primer compatible with finish system as recommended by finish system manufacturer.

PART 3 – EXECUTION

3.01 EXAMINATION

A. Inspect roof deck to verify deck is clean and smooth, free of depressions, waves, or projections, properly sloped to drains.

B. Verify deck is dry and free of snow or ice. Verify joints in wood deck are solidly supported and fastened.

C. Verify correct placement of wood nailers and insulation positioning between nailers.

D. Verify roof openings, curbs, pipes, sleeves, ducts, or vents through roof are solidly set, reglets are in place, and nailing strips located.

E. Verify roofing termination and base flashings are in place, sealed, and secure.

3.02 PREPARATION

A. Install starter and edge strips, and cleats before starting installation.

B. Install surface mounted reglets true to lines and levels. Seal top of reglets with sealant.

C. Back paint concealed metal surfaces and surfaces in contact with dissimilar metals with protective backing paint to a minimum dry film thickness of 15 mil.

D. Place eave edge metal flashings tight with fascia boards. Weather lap joints 2 inches and seal with plastic cement. Secure flange with nails per plan.

3.03 INSTALLATION - EAVE (ICE DAM) PROTECTION

A. Apply eave protection sheet in accordance with manufacturer's instructions.

B. Apply 4-inch-wide band of plastic cement over deck flange of eave edge flashings, and embed an 18-inch-wide strip of eave protection sheet. Place starter strip with eave edge flush with face of flashings. Secure in place. Lap ends minimum 6 inches.

C. Apply plastic cement at rate of approximately 1-1/4 gal/100 sq ft over starter strip.

D. Starting from lower edge of starter strip, lay additional 36-inch-wide strips of eave protection sheet in plastic cement, to produce a two ply membrane. Weather lap plies minimum 19 inches and nail in place. Lap ends minimum 6 inches. Stagger end joints of each consecutive ply.

E. Extend eave protection sheet minimum 4 feet upslope beyond interior face of exterior wall.

3.04 INSTALLATION - ROOFING

A. Apply underlayment over entire roof area.
   1. Apply in single layer laid perpendicular to slope; weather lap edges 2 inches and nail in place.
   2. Apply in 2 layers; the first layer laid parallel to slope with joints lapped 6 inches, second layer laid perpendicular to slope with 2-inch lapped edges.
   3. Minimize nail quantity.

B. Apply slip sheet in one layer, laid loose.

C. Cleat and seam all joints.

D. Use plastic cement for joints between metal and bitumen and for joints between metal and felts.

E. Provide formed metal pans for protrusions through roof. Fill pans watertight with plastic cement.

F. Provide gutters.

G. Solder lap joints. After soldering, wash metal clean with neutralizing solution, rinse with water.

H. Install snow guards as shown in drawings.

3.05 INSTALLATION – PBR ROOFING

A. Conform to SMACNA Architectural Sheet Metal Manual

B. Roof shall have a minimum pitch of 1/12.

C. Space seams as required.

D. Panel shall begin at gable end of roof opposite the prevailing rain-bearing wind.

E. Panel to be laid square the eave and ridge.

F. If end-lapping is required, the upper panel should lap over the lower panel. Place an overhang 2-3 inches to provide a drip edge (1 inch for gutter).

G. Butyl tape shall be applied above and beneath inside closure.

3.06 INSTALLATION - STANDING SEAM ROOFING

A. Conform to SMACNA Architectural Sheet Metal Manual

B. Space standing seams as required.

C. Lay sheets with long dimension perpendicular to eaves. Apply pans beginning at eaves.

D. Lock cleats into seams and flatten.

E. Stagger transverse joints of roofing sheets.

F. At eaves and gable ends, terminate roofing by hooking over edge strip.

G. Finish standing seams 1 inch high on flat surfaces

H. Finish standing seams 1/2 inch high on curved surfaces.

I. Bend up one side edge 1-1/2 inches and other edge 1-3/4 inches.

J. Make first fold 1/4 inch wide single fold and second fold ½-inch wide, providing locked portion of standing seam, 5 plies in thickness.

K. Fold lower ends of seams at eaves over at 45-degree angle.

L. Terminate standing seams at ridge and hips by turning down with tapered fold.

M. Form valleys of sheets not exceeding 10 feet in length. Lap joints 6 inches in direction of drainage.

N. Extend valley sheet minimum 6 inches under roofing sheets.

O. At valley, double fold valley and roofing sheets and secure with cleats spaced 18 inches on center.

3.07 INSTALLATION - BUILT-IN GUTTERS AND DOWNSPOUTS

A. Conform to SMACNA Architectural Sheet Metal Manual

B. Secure gutter lining to substrate with cleats spaced as shown in drawings.

C. Longitudinal joints not acceptable.

D. At roof edges, extend gutter lining under metal roofing 6 inches minimum and terminate in 3/4 inch folded edge secured by cleats. Hook lower end of roofing into lock strip to form 3/4 inch wide loose-lock seam.

E. Seal gutters watertight. Seal joint of gutter to drain.

F. Connect downspouts to downspout boots as shown in drawings.

G. Set splash pans under downspouts.

3.08 INSTALLATION - FLASHINGS

A. Conform to SMACNA Architectural Sheet Metal Manual

B. Insert flashings into reglets to form tight fit.

1. Secure in place with lead wedges as required. Pack remaining spaces with lead wool.

2. Seal flashings into reglets with sealant.

C. Secure flashings in place using concealed fasteners. Use exposed fasteners only where permitted.

D. Cleat and seam all joints.

E. Apply plastic cement compound between metal flashings and felt flashings.

F. Fit flashings tight in place. Make corners square, surfaces true and straight in planes, and lines accurate to profiles.

G. Seal metal joints watertight.

H. Solder metal joints for full metal surface contact. After soldering, wash metal clean with neutralizing solution and rinse with water.

3.09 PROTECTION

A. Do not permit traffic over unprotected roof surface.

END OF SECTION

SECTION 07 6200 – SHEET METAL FLASHING AND TRIM

PART 1 – GENERAL

1.01 THE REQUIREMENT

A. Furnish and install all formed and/or flat metal 11-gauge and lighter, in accordance with the Contract Documents.

1.02 STANDARDS

A. Except as herein modified, fabricate, and install work in accordance with printed standards of Sheet Metal and Air Conditioning Contractors National Association (SMACNA).

1.03 SUBMITTALS

A. Submittals shall be furnished in accordance with Section 01 33 00 – Submittal Procedures.

B. Indicate type, gauge, and shape of sheet metal items; type, size, location and spacing of all joints, including expansion joints; shop finishes and other required coatings.

1.04 DELIVERY

A. Time deliveries with construction progress. Cooperate with various trades to which sheet metal items are furnished and with those whose progress of work is dependent upon installation of sheet metal items.

1.05 QUALITY ASSURANCE

A. Guarantee sheet metal work for a period of 2 years to be free of water leaks.

B. Guarantee shall include replacement and/or repair of other work damaged by water due to leakage in sheet metal work.

PART 2 – MATERIALS

2.01 SHEET METAL

A. Aluminum Sheet: Plain Sheet: ASTM B209, alloy 3003, 3004, Alclad 3003 or Alclad 3004; appropriate temper, except where temper is specified; mill finish unless otherwise specified.

B. Zinc-Coated (Galvanized) Steel Sheet: ASTM A526, copper bearing. Unless otherwise noted, gauges indicated or specified are Galvanized Sheet Gauge. Zinc coating shall be in accordance with ASTM A525 and shall not be less than coating Class G90.

2.02 FASTENERS

A. General:
   1. Type best suited for intended purposes.
   2. Use aluminum or stainless steel fasteners with aluminum.
   3. Use stainless steel or hot-dip galvanized steel fasteners with zinc-coated steel.
   4. Use only stainless steel fasteners when attaching dissimilar metals.

B. Material:
   1. Aluminum Fastener Materials: Ally 6061 or 5056.
   2. Stainless Steel Materials: Type 305
   3. Fasteners for Securing Sheet metal to Concrete and Masonry shall be Fastway Extruded Vinyl Anchors, Holub “Hi-Red” plastic screw anchors, “Star” plastic anchors or equal non-ferrous anchors, used with wood or sheet metal screws of specified type material; lead anchors are not acceptable.
   4. Nails for Securing Sheet metal to Wood shall be the specified type material; barbed, annular thread or screw type.

2.03 SOLDER

A. Type and composition best suited for material being soldered.

B. Composition Sn50 for galvanized metal.

C. For aluminum, use solder composition as recommended by metal manufacturer for type alloy to be soldered.

2.04 FLUX

A. Type and composition best suited for material being soldered.

2.05 PRIMERS

A. Asphalt Primer: ASTM D41, brushable.

B. Galvanized Metal Primer: Zinc Dust-zinc Oxide Primer as specified under Section 09 91 00, Painting.

2.06 BUTYL SEALING TAPE PRC

A. Butyl-Lock sealant type: Morrison & Company's CL-50 "Cushion-Lock" sealing tape or equal (3/32-inch x 1-inch).

PART 3 – EXECUTION

3.01 GENERAL

A. Cut edges or joints and abrasions exposing base metal of galvanized sheet metal shall be coated with solder to equivalent thickness of zinc coating before assembling or installing sheet metal items.

B. Wipe all soldered joints clean of flux. Completely neutralize acid fluxes by washing soldered joints with soda.

C. Coat all aluminum surfaces in contact with wood with asphalt primer, and allow to dry before setting in place.

D. Coat all metal surfaces in contact with built-up roofing using asphalt bitumen with asphalt primer, and allow to dry before setting in place.

E. Provide insulation of dissimilar metals from contact with each other with coating of asphalt primer.

F. Finish all sheet metal work straight and true, with miters and joints accurately fitted. Exposed work shall be free of dents. All corners shall be reinforced, and seams soldered or otherwise made waterproof. Exposed edges shall be hemmed or finished smooth.

G. All work shall be made watertight. Expect where provision is required for expansion and contraction, all joints and seams shall be locked or otherwise made mechanically strong. Solder may be used, where appropriated, to make joints and seams watertight, but shall not be considered as providing mechanical strength.

1. Flashing: Flashing throughout shall be 26-gauge galvanized iron or 20-gauge aluminum. Unless otherwise shown, flashing shall be at locations indicated on Drawings and as otherwise required for watertight construction.
2. Downspouts: Downspout sleeves shall be galvanized iron, sizes indicated on Drawings. Miter and solder at change of direction.
3. Gutters: Gutters shall be galvanized iron or aluminum, shaped as shown on Drawings. Miter corners and solder joints. Joints shall be lapped, riveted or soldered. Slip joints, where required, shall have grooves sealed with white butyl sealing tape. Gutter expansion joints shall be located midway between downspout outlets and shall fall on a 4-foot module. The joint shall be of a design, which will provide watertight connection and permit freedom of movement of the gutter lining.

3.02 SHOP PAINTING

A. Galvanized steel, except as otherwise specified, shall be given a shop treatment of copper acetate solution of 6 ounces of copper acetate to one gallon of water, and followed by a brush or spray-coat of galvanized metal primer compatible with finish coat system.

3.03 ASSEMBLIES

A. Fabricate assemblies from materials and of gauges indicated or specified. Where material is not indicated, fabricate from zinc-coated steel not loess that 26-gauge, aluminum not less than 20-gauge.

B. Seal between laps of expansion joints of gutters, flashing, etc., with butyl sealing tape.

C. Cleats supporting bottom edge of edging, etc., shall be continuous, secure and not more than 12-inch centers.

D. Secure deck flanges of edging, etc., on not more than 4-inch centers.

END OF SECTION

SECTION 07 7200 – ROOF ACCESSORIES

PART 1 – GENERAL

1.01 SECTION INCLUDES

A. Manufactured curbs, equipment rails, and pedestals.

B. Roof hatches, manual and automatic operation, including smoke vents.

C. Snow guards.

1.02 REFERENCE STANDARDS

A. ASTM A123/A123M - Zinc (Hot-Dip Galvanized) Coatings on Iron and Steel

B. ASTM A153/A153M - Zinc Coating (Hot-Dip) on Iron and Steel Hardware

C. ASTM A653/A653M - Steel Sheet, Zinc-Coated (Galvanized) or Zinc-Iron Alloy-Coated (Galvannealed) by the Hot-Dip Process

D. ASTM A792/A792M - Steel Sheet, 55% Aluminum-Zinc Alloy-Coated by the Hot-Dip Process

E. FM P7825 - Approval Guide; Factory Mutual Research Corporation

F. MSS SP-58 - Pipe Hangers and Supports - Materials, Design, Manufacture, Selection, Application, and Installation; Manufacturers Standardization Society of the Valve and Fittings Industry, Inc.

G. UL (BMD) - Building Materials Directory

1.03 SUBMITTALS

A. See Section 01 3300 – Submittal Procedures.

B. Product Data: Manufacturer's data sheets on each product to be used.
   1. Preparation instructions and recommendations.
   2. Storage and handling requirements and recommendations.
   3. Installation methods.
   4. Maintenance requirements.
   5. For smoke hatches, submit evidence of approval by evaluation agency specified.

C. Shop Drawings: For non-penetrating rooftop supports, submit detailed layout developed for this project, with design calculations for loadings and spacings.

D. Certificate: For smoke hatches, provide certificate of approval from authority having jurisdiction.

1.04 DELIVERY, STORAGE, AND HANDLING

A. Store products in manufacturer's unopened packaging until ready for installation.

B. Store products under cover and elevated above grade.

PART 2 – PRODUCTS

2.01 MANUFACTURED CURBS

A. Manufactured Curbs, Equipment Rails, and Other Roof Mounting Assemblies:
   1. AES Industries Inc.: www.aescurb.com.
   2. The Pate Company: www.patecurbs.com.
   3. Roof Products & Systems (RPS) by Commercial Products Group of Hart & Cooley, Inc: www.rpscurbs.com.

4. Or ENGINEER-approved equal.

B. Manufactured Curbs, Equipment Rails, and Other Roof Mounting Assemblies: Factory-assembled hollow sheet metal construction with fully mitered and welded corners, integral counterflashing, internal reinforcing, and top side and edges formed to shed water.
   1. Sheet Metal: Hot-dip zinc coated steel sheet complying with ASTM A653/A653M, SS Grade 33; G60 coating designation; 18 gauge, 0.048 inch thick.
   2. Roofing Cants: Provide integral sheet metal roofing cants dimensioned to begin slope at top of roofing insulation; 1:1 slope; minimum cant height 4 inches.
   3. Manufacture curb bottom and mounting flanges for installation directly on roof deck, not on insulation; match slope and configuration of roof deck.
   4. Provide the layouts and configurations shown on the drawings.

C. Curbs Adjacent to Roof Openings: Provide curb on all sides of opening, with top of curb horizontal for equipment mounting.
   1. Provide preservative treated wood nailers along top of curb.
   2. Insulate inside curbs with 1-1/2 inch thick fiberglass insulation.
   3. Height Above Finished Roof Surface: 6 inches, minimum.
   4. Height Above Roof Deck: 14 inches, minimum.

D. Equipment Rails: Two-sided curbs in straight lengths, with top horizontal for equipment mounting.
   1. Provide preservative treated wood nailers along top of rails.
   2. Height Above Finished Roof Surface: 6 inches, minimum.
   3. Height Above Roof Deck: 14 inches, minimum.

E. Pipe, Duct, and Conduit Mounting Pedestals: Vertical posts, minimum 8 inches square unless otherwise indicated.
   1. Provide sliding channel welded along top edge with adjustable height steel bracket, manufactured to fit item supported.
   2. Height Above Finished Roof Surface: 6 inches, minimum.
   3. Height Above Roof Deck: 14 inches, minimum.

2.02 ROOF HATCHES, MANUAL AND AUTOMATIC OPERATION

A. Manufacturers - Sound Rated Roof Hatches:
   1. Bilco Co.: www.bilco.com.
   2. Milcor by Commercial Products Group of Hart & Cooley, Inc: www.milcorinc.com.
   3. Or ENGINEER-approved equal.

B. Manufacturers - Roof Hatches:
   1. Acudor Products Inc; Aluminum Roof Hatch: www.acudor.com.
   2. Bilco Company; Type S (ladder access, standard size, solid cover): www.bilco.com.
   3. Dur-Red Products: www.dur-red.com.
   4. Milcor by Commercial Products Group of Hart & Cooley, Inc: www.milcorinc.com.
   5. Or ENGINEER-approved equal.

C. Manufacturers - Smoke Vent Roof Hatches:
   1. Bilco Company; Type DSH (double leaf): www.bilco.com.
   2. Bristolite Daylighting Systems, Inc; Bristol Smoke Vent SVAA: www.bristolite.com.
   3. Sunoptics Prismatic Skylights, a Division of Acuity Brands; Industrial Smoke Vent: www.sunoptics.com.
   4. Or ENGINEER-approved equal.

D. Roof Hatches: Factory-assembled steel frame and cover, complete with operating and release hardware.
   1. Style: Provide flat metal covers unless otherwise indicated.

2. Mounting: Provide frames and curbs suitable for mounting conditions indicated on the drawings.
3. Smoke Hatches: Where "smoke" or "smoke/heat" operation is indicated, provide the following additional features, and omit manual operation for access:
    a. Smoke Release Mechanism: Automatic opening on melting of replaceable UL-listed fusible link at 165°F.
    b. UL-listed as automatically operated smoke and heat vent.
    c. Fire Alarm Connection: Provide separate resettable electrical link release mechanism and connection point for fire alarm system.
4. Sound Rated Hatches: Two sets of double leaf doors with air space between upper and lower doors; upper doors to open upward, lower doors to open downward; minimum STC of 45.
5. Size(s): As indicated on drawings; single-leaf style unless indicated as double-leaf.
6. For Ladder Access: Single leaf; 30 by 36 inches.
7. For Ships Ladder Access: Single leaf; 30 by 54 inches.
8. For Stair Access: Single leaf; 30 by 96 inches.
9. For Equipment Access: Double leaf; 48 by 48 inches.
10. For Smoke Venting Without Access: 24 by 24 inches.

E. Frames/Curbs: One-piece curb and frame with integral cap flashing to receive roof flashings; extended bottom flange to suit mounting.
1. Material: Galvanized steel, 14 gauge, 0.0747 inch thick.
2. Finish: Factory prime paint.
3. Insulation: 1 inch rigid glass fiber, located on outside face of curb.
4. Curb Height: As indicated on drawings.

F. Metal Covers: Flush, insulated, hollow metal construction.
1. Capable of supporting 40 psf live load.
2. Material: Galvanized steel; outer cover 14 gauge, 0.0747 inch thick, liner 22 gauge, 0.03 inch thick.
3. Material: Mill finished aluminum; outer cover 0.125 inch thick, liner 0.04 inch thick.
4. Finish: Factory prime paint.
5. Insulation: 1 inch rigid glass fiber.
6. Gasket: Neoprene, continuous around cover perimeter.

G. Skylight Covers: Plastic glazed framed cover.
1. Capable of supporting 40 psf live load.
2. Glazing Frame: 0.04 inch thick aluminum.
3. Shape: Convex dome shaped.
4. Glazing: Single thickness, clear acrylic.
5. Gasket: Neoprene, continuous around cover perimeter.

H. Hardware: Steel, zinc coated and chromate sealed, unless otherwise indicated or required by manufacturer.
1. Lifting Mechanisms: Compression or torsion spring operator with shock absorbers that automatically opens upon release of latch; capable of lifting covers despite 10 psf load.
2. Hinges: Heavy duty pintle type.
3. Hold open arm with vinyl-coated handle for manual release.
4. Latch: Upon closing, engage latch automatically and reset manual release.
5. Manual Release: Pull handle on interior.
6. Smoke Hatches: Manual release operation not to disturb automatic release mechanisms; easy resetting by OWNER's maintenance personnel; provide latch designed to prevent relatching unless the automatic release mechanism has been properly reset for automatic operation.

7. Locking: Padlock hasp on interior.

2.03 NON-PENETRATING ROOFTOP ASSEMBLIES

A. Manufacturers - Non-Penetrating Rooftop Assemblies:
   1. PHP Systems/Design: www.phpsd.com.
   2. Hart & Cooley, Inc.: www.portalsplus.com.
   3. Or ENGINEER-approved equal.

B. Non-Penetrating Rooftop Assemblies: Manufacturer-engineered and factory-fabricated, with pedestal bases that rest on top of roofing membrane, not requiring any attachment to the roof structure, and not penetrating the roofing assembly.
   1. Design Loadings and Configurations: As required by applicable codes.
   2. Height: Provide minimum clearance of 6 inches under supported items to top of roofing.
   3. Support Spacing and Base Sizes: As required to distribute load sufficiently to prevent indentation of roofing assembly.
   4. Steel Components: Stainless steel, or carbon steel hot-dip galvanized after fabrication in accordance with ASTM A123/A123M.
   5. Hardware, Bolts, Nuts, and Washers: Stainless steel, or carbon steel hot-dip galvanized after fabrication in accordance with ASTM A153/A153M.

C. Walkways, Stairs, and Platforms: Structural steel frame, walking surfaces, and railings.
   1. Dimensions: As indicated on the drawings.
   2. Walking Surfaces and Stair Treads: Steel grating, either formed plank grating or welded bar grating; serrated surface.

D. Pipe Supports: Provide attachment fixtures complying with MSS SP-58 and as indicated.
   1. Attachment/Support Fixtures: As recommended by manufacturer, same type as indicated for equivalent indoor hangers and supports; corrosion resistant material.
   2. See relevant piping system Specification Section for additional requirements.

E. Duct Supports:

F. Conduit and Cable Tray Supports:

G. Non-Penetrating Pedestals: Steel pedestals with square, round, or rectangular bases.
   1. Bases: High density polypropylene.
   2. Base Sizes: As required to distribute load sufficiently to prevent indentation of roofing assembly.
   3. Steel Components: Stainless steel, or carbon steel hot-dip galvanized after fabrication in accordance with ASTM A123/A123M.
   4. Products:
      a. Hart & Cooley, Inc.; Pedestal Plus: www.portalsplus.com.
      b. Or ENGINEER-approved equal.

2.04 SNOW GUARDS

A. Snow Guards:
   1. Berger Building Products: www.bergerbp.com.
   2. Snostop: www.snostop.com.
   3. Sno Gem; Original Polycarbonate: www.snogem.com.
   4. Alpine Snow Guards: www.alpinesnowguards.com.
   5. Or ENGINEER-approved equal.

B. Snow Guards: Individual projecting polycarbonate shapes, set between roofing shingles/tiles, and mechanically fastened to roof deck.
   1. Wire Loops: Copper wire, 0.135 inch diameter, with copper tabs, 16 oz/sq ft, mill finish.

2. Projecting Metal Shapes: Bronze castings, triangular spike design.
3. Projecting Polycarbonate Shapes: Clear polycarbonate plastic with UV stabilizers, semi-circular design.
4. Finish: Mill.
5. Placement: As shown on drawings.

C. Fence Type Snow Guard: Continuous snow guard; tubing set in brackets.
1. Bracket Base Plate: Shaped to fit roof tile.
2. Distance from Eaves: 8 inches.
3. Bracket Spacing: 8 inches.
4. Brackets: Aluminum on matching base plate.
5. Tubing: Aluminum, mill finish.
a. Outside Diameter: 1 inch.
b. Wall Thickness: 1/8 inch.
c. Threaded Couplings: As recommended by manufacturer.
d. End Collars and Caps: Metal to match.

D. Clamps for Standing Seam Roof: Stainless steel clamps attached to standing seams of roof panels; for attachment of snow guard brackets.
1. Seam Profile: Standard.
2. Clamp Spacing: Every panel seam; maximum spacing of 24 inches.

PART 3 – EXECUTION

3.01 EXAMINATION

A. Do not begin installation until substrates have been properly prepared.

B. If substrate preparation is the responsibility of another installer, notify ENGINEER of unsatisfactory preparation before proceeding.

3.02 PREPARATION

A. Clean surfaces thoroughly prior to installation.

B. Prepare surfaces using the methods recommended by the manufacturer for achieving the best result for the substrate under the project conditions.

3.03 INSTALLATION

A. Install in accordance with manufacturer's instructions, in manner that maintains roofing weather integrity.

3.04 CLEANING

A. Clean installed work to like-new condition.

3.05 PROTECTION

A. Protect installed products until completion of project.

B. Touch-up, repair or replace damaged products before Substantial Completion.

END OF SECTION

SECTION 07 9200 – JOINT SEALANTS

PART 1 - GENERAL

1.01 THE REQUIREMENT

A. Furnish and install caulking and sealing as indicated these Specifications.

1.02 SUBMITTALS

A. Submittals shall be furnished in accordance with Section 01 3300 – Submittal Procedures.

B. Indicate manufacturers and brand names, colors available and locations where each will be used.

1.03 QUALITY ASSURANCE

A. Comply with requirements of the general conditions except as noted below.

B. Guarantee all work of this Section for a period of 2 years.

C. Guarantee all work against water leaks, air infiltration, sagging and pulling loose.

D. Guarantee shall include replacement and/or repair of other work damaged by water leakage in caulking and sealant work.

1.04 PRODUCT DELIVERY, STORAGE AND HANDLING

A. Deliver sealants in original sealed containers, each bearing manufacturer's name and product designation.

B. Do not retain at the job site material, which has exceeded the shelf life recommended by its manufacturer.

PART 2 - MATERIALS

2.01 SEALANTS

A. Types 1 to 4 Sealants: Polyurethane sealants conforming to Federal Specification TT-S-00227E Type II & ANSI A116.1.
   1. Type 1 Sealant: Two part 30-40 Shore A, non-sag
      a. Manufacture Sikaflex – 2C or ENGINEER-approved equal
   2. Type 2 Sealant: Two part, 35-45 Shore A, self-leveling.
   3. Type 3 Sealant: Two part, 20-35 Shore A, self-leveling.
   4. Type 4 Sealant: Two part, 20-35 Shore A, non-sag.

B. Type 5 Sealant: One component, elastomeric gun grade polyurethane sealant conforming to ASTM C920, Type S, Grade NS, Class 25. Use NT, M, A, G, and I Federal Specifications TT-S-00230C Type 2, Class A.
   1. Manufacturer: Sonneborn Sonolastic NP 1 or ENGINEER-approved equal.

2.02 ACCESSORIES

A. Primers: As specified by sealant manufacturer

B. Backup Materials: Closed cell polyethylene foam

C. Bond Breaker: Polyethylene film.

2.03 COLOR

A. Color for each location of use shall be as selected by OWNER and in accordance with the contract documents. Non-availability of a required color within a particular brand of otherwise approved material shall not act to relieve obligation to furnish material of required color and conforming to specifications.

B. Colors shall be selected to best blend with adjoining materials.

PART 3 - EXECUTION

3.01 LOCATIONS FOR SEALANT TYPES

A. Type 1 Sealant: Use for all interior and exterior construction, expansion joints, etc. associated with sealing the joints in the concrete tanks

B. Type 2 Sealant: Except as hereinafter specified, use for all interior and exterior horizontal joints subject to foot traffic.

C. Type 3 Sealant: Except as hereinafter specified, or where Type 1 sealant is required, use for all exterior horizontal joint.

D. Type 4 Sealant: Use for all exterior vertical surfaces.

E. Type 5 Sealant: Use for all interior work except where Type 1 sealant is required.

F. Caulk and seal all open joints, both interior and exterior; at junction of metal frames and walls; at other locations as noted on drawings.

G. Generally, expansion joints in exterior concreted flatwork on grade, curbs, and gutter for sitework, etc.; joint fillers will not require a joint sealant. Where sealant is noted on drawings for such joints, sealant shall be Type 1 and a bond breaker shall be installed along top of joint filler, full width of joint, to present contact between sealant and joint filler.

3.02 SEALANT AND JOINT DETAILS

A. Joint Sizes:
   1. Types 1, 2, 3 and 4 Sealants:
      a. Minimum joint size: ¼-inch x ¼-inch
      b. Depth to width ration of joint shall be a recommended by sealant manufacturer.
      c. Maximum width: Sealant manufacturer’s recommended maximum.
   2. Type 4 Sealant: Maximum joint size shall be 3/8-inch x ½-inch.

B. Joints deeper than above shall have backup material installed to maintain specified depth.

C. With Types 1, 2, 3 and 4 sealants, a bond breaker shall be installed, unless backup material is used, so that sealant bonds only sides of joints.

3.03 SEALANT INSTALLATION

A. Carefully and thoroughly clean surfaces with cleaner, and in matter recommended by sealant manufacturer.

B. Prime surfaces where recommended by sealant manufacturer.

C. Apply sealants smoothly and uniformly. Mask surfaces each side of joints to protect adjacent surface and to form straight, even edges.

END OF SECTION 07 9200

SECTION 08 1100 – METAL DOORS AND FRAMES

PART 1 – GENERAL

1.01 THE REQUIREMENT

A. Furnish and install steel doors, frames, and related items, complete, operable, including all finish hardware, and all appurtenant work, complete and operable, in accordance with the requirements of the Contract Documents.

1.02 REFERENCE SPECIFICATIONS, CODES AND STANDARDS

A. Commercial Standards:
   1. ASTM A366 – Specification for Steel, Carbon, Cold-Rolled Sheet, Commercial Quality
   2. ANSI A115 Series – Door and Frame Preparation
   3. UL – Underwriters' Laboratories, Inc.

B. Trade Standards: National Association of Architectural Metal Manufacturers (NAAMM) or Steel Door Institute (SDI).

C. Manufacturers' Standards: In addition to the standards listed above, the steel doors and frames and their installation shall be in accordance with the manufacturer's published recommendations and specifications.

1.03 SUBMITTALS

A. Submittals shall be in accordance with Section 01 3300 – Submittal Procedures.

B. Shop Drawings: Shop drawings shall show details of the products and systems and connections to adjoining materials. Schedules showing sizes, types, and locations of door louvers and glass shall be submitted along with manufacturer's installation instructions.

1.04 PRODUCT DELIVERY, STORAGE AND HANDLING

A. Doors and frames shall be shipped and stored with temporary stiffeners and spacers in place to prevent distortion.

B. Doors and frames shall be delivered in original, unbroken packages, containers or bundles bearing the name of the manufacturer.

C. Doors and frames shall be carefully stored on wood blocking in an area that is protected from the elements. Storage shall be in a manner that will prevent damage or marring of finish.

PART 2 – PRODUCTS

2.01 MATERIALS AND FABRICATION - GENERAL

A. Shop Fabrication and Assembly: All steel doors and frames shall be shop fabricated and shop assembled, where possible. Temporary stiffeners, spacers, and other accessories necessary to facilitate handling and accurate erection shall be provided. After fabrication, all tool marks and other surface imperfections shall be filled and ground smooth.

B. Fire Rating and Labeling: Doors and frames specified or shown as fire-rated shall bear a UL label indicating the type of rating for which certified. Designs and construction of such products shall have specific UL approval according to current procedures for the specified fire rating, either 3-hour, 1½-hour, ¾-hour or 20-minute as shown. Hollow steel doors and frames for fire-rated openings shall conform to UL listing and shall be UL labeled.

C. Materials for Doors and Frames: All hollow metal doors and frames shall be fabricated entirely from prime quality, commercial grade, cold-rolled steel conforming to ASTM A366, Type II or III.

D. Priming and Painting: Doors and frames shall be chemically treated to ensure maximum paint adhesion and shall have all exposed surfaces painted with a rust-inhibitive primer after fabrication.

E. Hardware: Doors and frames shall be reinforced and drilled or tapped for fully templated hardware; and shall be reinforced with plates for surface-mounted hardware, meeting ANSI A115 Series requirements. Hardware shall be as specified in these Specifications and/or as shown.

2.02 METAL FRAMES

A. Pressed Metal Frames: Pressed steel frames for doors and other openings shall be combination buckled frame and trim of type and sizes as shown. Metal shall not be lighter than 16-gauge steel. Frames shall be of the welded unit type. Special frames, oversized frames and frames with transom shall be provided where shown.

2.03 FRAME ANCHORS

A. Floor Anchors: Floor anchors shall be welded inside each frame jamb head, and holes shall be provided for floor anchorage. Minimum thickness of floor anchors shall be 14-gauge.

B. Anchors for Masonry/Concrete Installations: Frames for installation in masonry and/or concrete walls shall be provided with variable jamb anchors of the T-strap, stirrups and strap or wire type. The number of anchors provided per frame jamb and head shall be as follows:

1. Frames up to 7 feet 6 inches in height: Three (3) anchors.
2. Frames over 7 feet 6 inches to 8 feet 0 inches in height: Four (4) anchors.
3. Frames over 8 feet 0 inches in height: One (1) anchor for each 2 feet 0 inches or fraction in height.
4. Frame head anchors shall be not less than those required in these Specifications.

2.04 SILENCER HOLES

A. Appropriate holes for silencers shall be provided in the doorframes, which are not designated to receive weather stripping, seals, or sound seals.

2.05 STEEL DOORS

A. Design and Construction: Steel doors shall be of hollow metal construction and shall be of full flush design with no visible seams. Face sheets shall be not less than cold-rolled, stretcher-leveled, 18-gauge steel. All doors shall have flush seamless face sheets with continuously and fully welded seam edges. Doors shall be rigid and neat in appearance, and shall be free from warpage or buckle. Corner bends shall be true and straight and shall be of not less than the minimum radius for the gage of metal used. The door top and bottom shall be internally reinforced by steel members welded in place. Tops of exterior doors shall be provided with flush, water and weather tight, top enclosures.

B. Transom Panels: Transom panels shall be provided where shown and shall be of construction same as doors.

C. Door and Transom Cores: Doors and transom cores shall be water-resistant honeycomb with minimum R of four (4) mineral/fiberboard. Fire rated doors shall be solid or mineral fiberboard core doors as required to meet code and Reference Standard’s requirements.

D. Louvers (where applicable): Door louvers for steel doors shall be of steel of the type, which integrally frames the opening and can attach securely. Louvers shall be of the inverted "Y" blade type for exterior use and "V" blade for interior use. Exterior louvered openings shall be provided with removable type insect screens. Door louvers shall be uniformly located in doors and shall be of sizes shown. Louvers at labeled doors shall be equipped with concealed fusible links.

E. Double Doors: Double doors shall be provided with a "T" type steel astragal unless otherwise specified.

F. Manufacturers or ENGINEER-approved Equal:
   1. Forderer Cornice Works
   2. Krieger Steel Products Co.
   3. Overly Manufacturing Co.
   4. Dean Steel Mfg.
   5. Curries

PART 3 – EXECUTION

3.01 CONSTRUCTION

A. General: All work shall be in accordance with manufacturer's published recommendations and specifications.

B. All work shall be coordinated with appropriate related subcontractor’s work to assure a proper installation. Field conditions and dimensions shall be verified prior to fabrication.

3.02 FRAME INSTALLATION

A. Frames shall be set plumb and square in a true plane, and be securely anchored to the adjoining construction. Steel shims shall be provided and shall be set tight and rigidly attached between frame anchors and structure. All finished metal frames shall be strong and rigid; neat in appearance and square, true and free of defects, warp or buckle.

B. Molded members, trims and stops, shall be clean cut, straight and shall be of a uniform profile throughout their lengths.

C. Corner joints shall have all contact edges tightly closed with all trim faces mitered, welded, and finished smooth. The use of gussets will not be permitted.

3.03 DOOR INSTALLATION

A. Doors shall be installed plumb, square, and level. Doors shall operate freely, but not loosely. They shall be free from rattling while in a closed position.

B. The door clearances shall be plus 3/32-inch or minus 1/32-inch and shall not exceed the limits specified in the manufacturers printed recommendations.

C. Any door that becomes warped more than 3/16-inch out-of-plane shall be replaced.

D. Doors and door's finish hardware shall have hardware protected prior to painting as specified.

3.04 FINISH HARDWARE

A. Finish hardware shall be installed in accordance with hardware manufacturer's standard templates and printed instructions. Operable parts shall be adjusted for correct function and operation.

3.05 EXISTING CONSTRUCTION

A. Frames that are dimpled for fasteners required for installation into previously placed (existing) concrete, masonry or steel structures shall have the fasteners and fastener frame dimples filled with auto putty or an ENGINEER-approved equal filler material. The fasteners and fillers at dimple holes shall be ground smooth (non-visible) before painting. Fastener locations shall not be visible after the painting work is finished.

END OF SECTION

SECTION 08 5113 – ALUMINUM WINDOWS

PART 1 – GENERAL

1.01 SECTION INCLUDES

A. Related Documents: Drawings and general provisions of the Contract, including General and Conditions and these Specifications, apply to this section.

B. This Section includes commercial grade aluminum window units of the performance class indicated. Window types required include:
   1. Fixed windows.
   2. Sliding window (Transaction window)

C. Performance Requirements: Provide windows engineered, fabricated, and installed to withstand normal thermal movement, wind loading, and impact loading without failure, as demonstrated by testing manufacturer's standard window assemblies representing types, grades, classes, and sizes required for Project according to test methods indicated.

D. Testing shall demonstrate compliance with requirements indicated in AAMA 101 for air infiltration, water penetration, and structural performance for type, grade, and performance class of windows required. Where required design pressure exceeds the minimum for the specified window grade, comply with AAMA 101, Section 3, "Optional Performance Classes."

E. Test Criteria: Testing shall be performed by a qualified independent testing agency based on the following criteria:
   1. Design wind velocity at Project site is 70 mph (113 km/h).
   2. Heights of window units above grade at window centerline are indicated on or can be determined from the Drawings. Consult with the Architect, if necessary, to confirm required loading and test pressures.
   3. Test Procedures: Test window units according to ASTM E283 for air infiltration, ASTM E547 for water penetration, and ASTM E330 for structural performance.

F. Submittals: Submit the following:
   1. Submittals shall be made in accordance with Section 01 3300 – Submittal Procedures.
   2. Product Data for each type of window required, including construction details and fabrication methods; profiles and dimensions of individual components; data on hardware, accessories, and finishes. Include recommendations for maintaining and cleaning exterior surfaces.
   3. Shop Drawings showing fabrication and installation of each type of window required. Include layout and installation details, elevations at ¼-inch = 1 foot (1:50) scale, typical window unit elevations at ¾-inch = 1 foot (1:20) scale, and full-size section details of typical composite members.
   4. Samples for initial color selection on 12-inch- (300-mm-) long sections of window members. Where finishes involve normal color variations, include Sample sets showing the full range of variations expected.
   5. Test reports from a qualified independent testing agency indicating that each type, grade, and size of window unit complies with performance requirements indicated. Test results based on use of down-sized test units will not be accepted.

G. Quality Assurance:
   1. Installer Qualifications: Engage an experienced Installer who has completed installation of aluminum windows similar in design and extent to those required for the project and whose work has resulted in construction with a record of successful in service performance.

2. Standards: Requirements for aluminum windows, terminology and standards of performance, and fabrication workmanship are those specified and recommended in AAMA 101 and applicable general recommendations published by AAMA.
3. Single Source Responsibility: Provide aluminum window units from one source and produced by a single manufacturer.

H. Project Conditions:
1. Field Measurements: Check actual window openings by accurate field measurement before fabrication. Show recorded measurements on final shop drawings. Coordinate fabrication schedule with construction progress to avoid delay of work.
a. Where necessary, proceed with fabrication without field measurements, and coordinate fabrication tolerances to ensure proper fit of window units.

PART 2 – PRODUCTS

2.01 MATERIALS

A. Manufacturers: The following may be provided:
1. EFCO Corporation
2. Graham Architectural Products Corp.
3. Kawneer Company, Inc.
4. Torrance Aluminum Window Co.
5. Old Castle Glass
6. or ENGINEER-approved equal

B. Aluminum Extrusions: Alloy and temper recommended for strength, corrosion resistance, and application of required finish, but not less than 22,000-psi (150-MPa) ultimate tensile strength and not less than 0.062 inch (1.6 mm) thick at any location for main frame and sash members. The main frame shall be not less than 2" depth.

C. Fasteners: Aluminum, nonmagnetic stainless steel, epoxy adhesive, or other materials warranted to be noncorrosive and compatible with window members, trim, hardware, anchors, and other components.
1. Where fasteners screw anchor into aluminum less than 0.125 inch (3.2 mm) thick, reinforce interior with aluminum or nonmagnetic stainless steel to receive screw threads or provide standard, noncorrosive, pressed-in, splined grommet nuts.
2. Except for application of hardware, do not use exposed fasteners. For application of hardware, use fasteners that match finish of member or hardware being fastened, as appropriate.

D. Anchors, Clips, and Window Accessories: Aluminum, nonmagnetic stainless steel, or zinc-coated steel complying with ASTM B633 and of sufficient strength to withstand design pressure indicated.

E. Hardware: Aluminum, stainless steel, or other corrosion-resistant material compatible with aluminum and of sufficient strength to perform the function for which it is intended.
1. Four-Bar Friction Hinges: Comply with AAMA 904.1.
a. Friction Shoes: Nylon or other nonabrasive, non-staining, noncorrosive, durable material.
2. Limit Device: Manufacturer's standard, concealed friction adjustor, adjustable stay bar, limit device designed to restrict ventilator opening.

F. Accessories: Manufacturer's standard accessories that comply with indicated standards.
1. Weather-stripping: Sliding-type weather-stripping where sash rails slide horizontally or vertically along unit frame. Provide compression-type weather-stripping at perimeter of each operating sash where sliding type is inappropriate.

G. Provide weather stripping locked into extruded grooves in sash.

1. Pole Operators: One pole operator and pole hanger for every room that has operable windows more than 72 inches (1800 mm) above floor. Fabricate pole of tubular-shaped anodized aluminum with rubber cap at lower end and standard push-pull hook at top. Provide sufficient length for window operation without reaching more than 60 inches (1500 mm) above floor.

H. Sliding Transaction Windows: Comply with requirements of AAMA/WDMA/CSA 101/I.S.2/A440 – 05 and manufacturer's standard locking/operating
   1. Hardware: Equipment and operating hardware as follows:
      a. Concealed plunger lock in the meeting rail with a flush mounted actuating handle.
      b. Sash shall ride on steel ball bearing rollers and a raised track, so dirt will not interfere with normal operation.
   2. Deal tray or shelf: 16-gauge stainless steel, pre-drilled for exterior mounting, and match window width dimension.

I. Projected Windows: Comply with requirements of AAMA Rating P-HC65. Window units shall successfully pass hardware load test requirements specified in AAMA 101. Provide tubular vents.
   1. Hardware: Equipment and operating hardware as follows:
      a. Hinges: Concealed 4-bar friction hinges with adjustable slide shoe (2 per ventilator).
      b. Lock: Pole-operated, cam-action, sweep lock handle and keeper.
      c. Limit Device: Stay bar with adjustable hold-open device.

J. Fabrication: Window units to comply with indicated standards. Include a complete system for assembly of components and anchorage of window units.
   1. Provide units that are reglazable without dismantling sash or ventilator framing.
   2. Prepare window sash or ventilators for glazing except where pre-glazing at the factory is indicated.
   3. Weepholes: Provide weepholes and internal passages to conduct infiltrating water to the exterior.
   4. Mullions: Provide mullions and cover plates as shown, matching window units, complete with anchors for support to structure and installation of window units. Allow for erection tolerances and provide for movement of window units due to thermal expansion and building deflections, in the manner indicated.
   5. Compensation channels: Provide compensation channels with anchors for window units as shown, of profile and dimensions indicated but not less than 0.062-inch-(1.6-mm-) thick extruded aluminum. Miter or cope corners, and weld and dress smooth with concealed mechanical joint fasteners. Finish to match window units. Provide compensation channels capable of withstanding design loads of window units.
   6. Glazing Stops: Provide screw applied or snap on glazing stops, coordinated with glass selection and glazing system indicated. Finish glazing stops to match window units.

K. Pre-glazed Fabrication: Pre-glaze window units where possible and practical. Comply with glass and glazing requirements of these Specifications and AAMA 101.

L. Finishes: Comply with NAAMM "Metal Finishes Manual." Finish designations prefixed by AA conform to the system established by the Aluminum Association for designating aluminum finishes.

M. Aluminum Finishes:
   1. General: Comply with NAAMM’s “Metal Finishes Manual for Architectural and Metal Products for recommendations relative to applying and designating finishes.

2. Appearance of Finished Work: Variations in appearance of abutting or adjacent pieces are acceptable if they are within one-half of the range of approved samples. Noticeable variations in the same piece are not acceptable. Variations in appearance of other components are acceptable if they are within the range of approved samples and are assembled or installed to minimize contrast.
3. Finish designations prefixed AA conform to the system established by the Aluminum Association for designating aluminum finishes.
4. High-Performance Organic Finish: AA-C12C42R1x (Chemical Finish: cleaned with inhibited chemicals; Chemical Finish: acid-chromate-fluoride-phosphate conversion coating; Organic Coating: as specified below). Prepare, pretreat, and apply coating to exposed metal surfaces to comply with coating and resin manufacturers' written instructions.
    a. Fluoropolymer Three-Coat System: Manufacturer's standard three-coat, thermo-cured system consisting of specially formulated inhibitive primer, fluoropolymer color coat, and clear fluoropolymer topcoat, with both color coat and clear topcoat containing not less than 70 percent polyvinylidene fluoride resin by weight; complying with AAMA 2605.
    b. Color and Gloss: As selected by CONTRACTOR from manufacturer's full range.

PART 3 – EXECUTION

3.01 GENERAL

A. Inspection: Inspect openings before installation. Verify that rough opening is correct and sill plate is level.

B. Installation: Comply with manufacturer's recommendations for installing window units, hardware, operators, and other components. Set windows plumb, level, and true to line, without warp or rack of frames or sash. Anchor securely in place.
    1. Separate aluminum and other corrodible surfaces from sources of corrosion or electrolytic action.

C. Set sill members and other members in a bed of sealant or with joint fillers or gaskets to provide weathertight construction. Coordinate installation with wall flashings and other components of the Work.

D. Field Quality Control: Conduct on-site tests with window manufacturer's representative present. The Architect will select units to be tested. Testing shall be performed by a qualified independent testing agency selected by the Architect.
    1. Air-Infiltration Tests: Conduct according to requirements of ASTM E783. Allowable infiltration shall not exceed 1.5 times the amount indicated.
    2. Water-Resistance Tests: Conduct according to requirements of ASTM E1105. No water leakage is permitted.
    3. Window units not meeting specified requirements and units having similar deficiencies shall be corrected at no cost to the Owner.

E. Adjust operating sash and hardware to provide tight fit at contact points and weather-stripping for smooth operation and a weathertight closure.

F. Clean aluminum promptly after installing windows. Avoid damage to finishes. Remove excess glazing and sealant compounds, dirt, and other substances. Lubricate hardware and other moving parts.

G. Clean glass of pre-glazed units promptly after installing windows.

H. Protect installed aluminum windows to ensure that they are without damage or deterioration at the time of Substantial Completion.

END OF SECTION

SECTION 08 7100 – DOOR HARDWARE

PART 1 – GENERAL

1.01 THE REQUIREMENT

A. Furnish and install all finish hardware and appurtenant work, complete and operable, in accordance with the Contract Documents. The CONTRACTOR shall also coordinate final finish hardware selection with the OWNER.

B. The work hereunder shall include all fabrication and mounting templates as needed for fabricators and for control of application of metal items.

C. In addition, provide and install all trim, attachments and fastenings specified or required for proper and complete installation. The work of this Section shall include all hardware that is not specified in other Sections, whether or not such hardware is herein specifically scheduled.

D. Protect the finish hardware from damage during construction, painting, and clean-up.

1.02 REFERENCE SPECIFICATIONS, CODES AND STANDARDS

A. Codes: All codes, as referenced herein, are specified in Section 01 4219 – Reference Standards.

B. Commercial Standards:
   1. Underwriters' Laboratories, Inc. Requirements and Approvals
   2. Hardware Institute (DHI): "Recommended Procedure for Processing Hardware Schedules and Templates" and "Architectural Hardware Scheduling and Format"
   3. BHMA: Builders Hardware Manufacturers Association

C. Manufacturers Standards: In addition to the standards listed above, the finish hardware and its installation shall be in accordance with the manufacturer's published recommendations and specifications.

1.03 SUBMITTALS

A. Submittals shall be furnished in accordance with Section 01 3300 – Submittal Procedures.

B. Samples: The samples of all items requested shall be furnished by the hardware supplier no later than 10 days after said request is received.

1.04 PROPRIETARY DESIGNATIONS

A. Manufacturer's product names, numbers and models are given herein for the purpose of indicating the requirements for the type, general construction, material, and operation of the specific item, not with the intention of limiting the item to the manufacturer's listed product. Substitution of another manufacturer's product that is fully equivalent in all respects may be made subject to the approval of the ENGINEER. Detailed and complete data shall be supplied as required to facilitate appropriate evaluation of all proposed substitute items.

1.05 PACKING, MARKING AND DELIVERY

A. All locks, exit devices, door closers, overhead door holders, hinges, kick plates, pulls and push plates, thresholds, and other similar items shall be individually packed in separate, suitable, original, containers as furnished by the hardware manufacturers. Each container shall be clearly marked with item numbers, article numbers, and names corresponding to those listed in the hardware schedule.

B. Small miscellaneous items that would not require specific location identifications, such as door stops, coat and hat hooks and door silencers may be quantity packed if properly labeled with item numbers and other identification.

C. Hardware shall be checked upon delivery with the aid of a representative of the hardware supplier's firm. Proper storage of all hardware will be required until ready for application.

PART 2 – PRODUCTS

2.01 GENERAL

A. Finish hardware shall be coordinated with all other work requiring builder's hardware or attaching to it. Copies of schedules, templates, etc., shall be furnished in ample time to avoid fabrication and construction delays. Each item of hardware shall be identified according to the approved list and schedule. All hardware shall be made to template.

B. All hardware furnished in connection with doors bearing UL Labels or where necessary to meet special requirements shall be in strict accordance with conditions established by the authority having jurisdiction and shall be subject to approval of that authority.

C. Hand of lock shall be as shown. If door hand is changed during construction, necessary changes shall be made at no extra cost.

D. Exit doors shall be operable at all times from the inside without the use of key or any special knowledge or effort.

E. Approved shop drawings from those trades with which hardware must be coordinated shall be provided to the hardware supplier. After checking these shop drawings, necessary template information shall promptly be supplied to all concerned as may be required to facilitate the progress of the job. All procedures for template information shall be in accordance with the handbook, "Recommended Procedure for Processing Hardware Schedules and Templates."

F. Finish of all hardware shall be 630-brush stainless steel unless otherwise specified in the hardware schedule.

G. Approved Manufacturers:
   1. Locks: Best, Sargent, Schlage
   2. Exit Devices: Precision, Sargent, Von Duprin
   3. Closers: LCN, Sargent, Norton
   4. Or ENGINEER-approved equal.

PART 3 – EXECUTION

3.01 GENERAL

A. All required items of hardware, including cylinders for locks, and all fitting, adjusting, and securing of each item neatly and firmly in place, shall be in perfect working order. Any work less than this shall form a basis for corrective measures.

B. All finish hardware shall be provided with paint protection prior to painting work. The paint protection shall be removed after completion of the painting work and the finish hardware cleaned and polished.

3.02 HARDWARE SCHEDULE

A. The hardware schedule is arranged for convenience of locating hardware and does not preclude in any way the requirements that all necessary hardware shall be furnished and properly installed. Hardware not specifically called out shall be similar to that required for similar uses.

B. The catalog numbers referred to in the hardware schedule are taken from catalogs of the manufacturers listed. They are used only to establish the quality and type of hardware to be used. Hardware equal in quality and utility will be accepted provided it conforms in operation, quality, weight, size, workmanship, and finish to the products hereinafter described. All component parts of locksets shall be the product of one manufacturer.

3.03 LATCHES AND BOLTS

A. Latches and bolts shall be installed, to automatically engage in keepers, whether activated by closers or by manual push. In no case should additional manual pressure be required to engage latch or bolt in keepers.

3.04 CLOSERS AND HINGES

A. Closers and hinges shall be carefully adjusted to operate the doors noiselessly and evenly, and hinges shall be installed so as not to bind. Closers, closer arms, and hold-open arms shall be attached with sex bolts.

B. Except at exterior doors, closers shall not be mounted on corridor or vestibule side of door.

3.05 WEATHER-STRIPPING AND SEALS

A. All doors shall be provided with weather-stripping or seals unless mutes, product weather-stripping or other special seals are specified. Whenever two types of seals are shown on the Finish Hardware Schedule on a given door they both are to be provided.

3.06 PROTECTIVE TAPE AND COATINGS

A. Strippable coating, removable tape protection or other approved means shall be provided to prevent any damage or staining of hardware during construction. Such protective measures shall be removed prior to final cleaning and the hardware polished before the acceptance of the project.

END OF SECTION

SECTION 08 8000 – GLAZING

PART 1 – GENERAL

1.01 SUMMARY

A. This Section includes glazing for the following products, including those specified in other Sections where glazing requirements are specified by reference to this Section:
   1. Storefront units.
   2. Vision lites and windows.
   3. Entrances and other doors.

B. Related Sections:
   1. Section 08 11 00 - Metal Doors and Frames
   2. Section 08 51 13 - Aluminum Windows

C. Definitions: Manufacturer is used in this Section to refer to a firm that produces primary glass or fabricated glass as defined in the referenced glazing standard.

D. System Performance Requirements:
   1. General: Provide glazing systems that are produced, fabricated, and installed to withstand normal thermal movement, wind loading, and impact loading (where applicable), without failure including loss or glass breakage attributable to the following: defective manufacture, fabrication, and installation; failure of sealants or gaskets to remain watertight and airtight; deterioration of glazing materials; and other defects in construction.
   2. Glass Design: Glass thicknesses indicated on Drawings are for detailing only. Confirm glass thicknesses by analyzing Project loads and in-service conditions. Provide glass lites for the various size openings in the thicknesses and strengths (annealed or heat-treated) to meet or exceed the following criteria:
      a. Minimum glass thickness, nominally, of lites in exterior walls is 6.0 mm (0.23 inch).
      b. Minimum glass thicknesses of lites, whether composed of annealed or heat-treated glass, are selected so the worst-case probability of failure does not exceed the following:

E. Determine minimum thickness of monolithic annealed glass according to ASTM E 1300. For other than monolithic annealed glass, determine thickness per glass manufacturer's standard method of analysis including applying adjustment factors to ASTM E 1300 based on type of glass.
   1. Normal thermal movement results from the following maximum change (range) in ambient and surface temperatures acting on glass-framing members and glazing components. Base engineering calculation on materials' actual surface temperatures due to both solar heat gain and nighttime sky heat loss.
      a. Temperature Change (Range): 120 deg F (67 deg C), ambient; 180 deg F (100 deg C), material surfaces.

F. Submittals:

   1. Submittals shall be furnished in accordance with Section 01 33 00 – Submittal Procedures.
   2. Product data for each glass product and glazing material indicated.
   3. Samples for verification purposes of 12-inch-square samples of each type of glass indicated except for clear monolithic glass products, and 12-inch-long samples of each color required (except black) for each type of sealant or gasket exposed to view. Install sealant or gasket sample between two strips of material representative in color of the adjoining framing system. If requested.
   4. Product certificates signed by glazing materials manufacturers certifying that their products comply with specified requirements.

a. Separate certifications are not required for glazing materials bearing manufacturer's permanent labels designating type and thickness of glass, provided labels represent a quality control program of a recognized certification agency or independent testing agency acceptable to authorities having jurisdiction.

5. Compatibility and adhesion test reports from sealant manufacturer indicating that glazing materials were tested for compatibility and adhesion with glazing sealants. Include sealant manufacturer's interpretation of test results relative to sealant performance and recommendations for primers and substrate preparation needed for adhesion.
6. Product test reports for each type of glazing sealant and gasket indicated, evidencing compliance with requirements specified.
7. Maintenance data for glass and other glazing materials to include in Operating and Maintenance Manual specified in Division 1.

G. Quality Assurance:
1. Glazing Publications: Comply with CBC Standard No. 54-1 "Glass Standard Specifications." Comply with published recommendations of glass product manufacturers and organizations below, except where more stringent requirements are indicated. Refer to these publications for glazing terms not otherwise defined in this Section or in referenced standards.
   a. FGMA Publications: "FGMA Glazing Manual."
2. Safety Glass: Products complying with ANSI Z97.1 and testing requirements of 16 CFR Part 1201 for Category II materials. Comply with CBC Standard No. 54-2.
   a. Subject to compliance with requirements, provide safety glass permanently marked with certification label of Safety Glazing Certification Council (SGCC) or other certification agency acceptable to authorities having jurisdiction.
3. Fire-Resistive Glazing Products for Door Assemblies: Products identical to those tested per ASTM E 152, labeled and listed by UL or another testing and inspecting agency acceptable to authorities having jurisdiction.
4. Fire-Resistive Glazing Products for Window Assemblies: Products identical to those tested per ASTM E 163, labeled and listed by UL or another testing and inspecting agency acceptable to authorities having jurisdiction.
5. Glazier Qualifications: Engage an experienced glazier who has completed glazing similar in material, design, and extent to that indicated for Project with a record of successful in-service performance.
6. Single-Source Responsibility for Glass: Obtain glass from one source for each product indicated below:
   a. Primary glass of each (ASTM C 1036) type and class indicated.
   b. Heat-treated glass of each (ASTM C 1048) condition indicated.
7. Single-Source Responsibility for Glazing Accessories: Obtain glazing accessories from one source for each product and installation method indicated.
8. Preconstruction Compatibility and Adhesion Testing: Submit to sealant manufacturers, samples of each glass, gasket, glazing accessory, and glass-framing member that will contact or affect glazing sealants for compatibility and adhesion testing as indicated below:
   a. Use test methods standard with sealant manufacturer to determine if priming and other specific preparation techniques are required for rapid, optimum glazing sealants adhesion to glass and glazing channel substrates.

H. Perform tests under normal environmental conditions during installation.
1. Submit not less than nine pieces of each type and finish of glass-framing members and each type, class, kind, condition, and form of glass (monolithic, laminated, insulating units) for adhesion testing, as well as one sample of each glazing accessory (gaskets, setting blocks and spacers) for compatibility testing.

2. Schedule sufficient time to test and analyze results to prevent delay in the Work.
3. Investigate materials failing compatibility or adhesion tests and get sealant manufacturer's written recommendations for corrective measures, including using special primers.
4. Testing is not required when glazing sealant manufacturer can submit required preparation data that is acceptable to University's Representative and is based on previous testing of current sealant products for adhesion to and compatibility with submitted glazing materials.

I. Delivery, Storage, and Handling: Protect glazing materials to comply with manufacturer's directions and as needed to prevent damage to glass and glazing materials from condensation, temperature changes, direct exposure to sun, or other causes.

J. Project Conditions: Environmental Conditions: Do not proceed with glazing when ambient and substrate temperature conditions are outside the limits permitted by glazing materials manufacturer or when glazing channel substrates are wet from rain, frost, condensation, or other causes.

K. Warranty:
1. General: Warranties specified in this Article shall not deprive the Owner of other rights the Owner may have under other provisions of the Contract Documents and will be in addition to and run concurrent with other warranties made by the Contractor under requirements of the Contract Documents.
2. Manufacturer's Warranty on Coated Glass Products: Submit written warranty signed by coated glass manufacturer agreeing to furnish replacements for those coated glass units that deteriorate as defined in "Definitions" article, f.o.b. point of manufacture, freight allowed Project site, within specified warranty period indicated below. Warranty covers only deterioration due to normal conditions of use and not to handling, installing, and cleaning practices contrary to glass manufacturer's published instructions.
a. Warranty Period: Manufacturer's standard but not less than 5 years after date of Substantial Completion.

PART 2 – PRODUCTS

2.01 GLASS PRODUCTS

A. Tempered Glass: Tempered glass, conforming to CBC Section 2406, shall be of the various types and thicknesses as specified or indicated. Tempered glass shall be cut to shape and size before tempering, and shall not be cut or trimmed after tempering. Lights not of proper shape and size shall not be used. Except for lights having one dimension greater than 72 inches, tong marks shall be on one of the shorter edges. Where holes are required, limiting requirements, as to size and spacing and location in relation to edges and corners, shall be in accordance with recommendation of the glass manufacturer. Edges which shall be exposed in finished work shall be polished; other edges shall be seamed.
1. Heat-Treated Float Glass: ASTM C 1048; Type I (transparent glass, flat); Quality q3 (glazing select).

B. Wire Glass: ASTM C 1036, Type II (patterned and wired glass, flat), Class 1 (clear), Quality q8 (glazing); ¼" thick nominal; of form and mesh pattern indicated below: Wired Glass
1. Polished Wired Glass: Form 1 (wired, polished both sides), and as follows:
a. Mesh m2 (square).
2. Available Manufacturers: Subject to compliance with requirements, manufacturers offering wired glass products that may be incorporated in the Work include the following companies.
a. LOF "Crossweld"

b. Mississippi “Baroque”
c. Or equal.

C. Interior glazing: ¼” thick clear, tempered (wire glass where required).

D. Exterior Glazing: 1/4" thick tinted Solex, tempered where required.

E. Privacy Glazing (at bathrooms): 1/4" thick tempered patterned/obsure lite. Pattern as selected by architect from manufacturer’s standard.
1. Guardian
2. Or equal

F. Mirrored glazing: ¼” thick mirrored glazing. Include ½” wide stainless steel frame, cut and mitered to fit mirror.

G. Ceramic-Coated Spandrel Glass: ASTM C 1048, Condition B (spandrel glass, one-surface ceramic coated), Type I (transparent glass, flat), Quality q3 (glazing select), and complying with other requirements specified.
1. Fallout Resistance: Provide spandrel units identical to those passing the fallout-resistance test for spandrel glass specified in ASTM C 1048.

H. Elastomeric Glazing Sealants:
1. General: Provide products of type indicated, complying with the following requirements:
a. Compatibility: Select glazing sealants and tapes of proven compatibility with other materials they will contact, including glass products, seals of insulating glass units, and glazing channel substrates, under conditions of installation and service, as demonstrated by testing and field experience.
b. Suitability: Comply with sealant and glass manufacturer's recommendations for selecting glazing sealants and tapes that are suitable for applications indicated and conditions existing at time of installation.
c. Colors: Provide color of exposed joint sealants to comply with the following:

I. Provide selections made by University’s Representative from manufacturer's full range of standard colors for products of type indicated.
1. Elastomeric Glazing Sealant Standard: Provide manufacturer's standard chemically curing, elastomeric sealants of base polymer indicated that comply with ASTM C 920 requirements indicated on each Elastomeric Glazing Sealant Product Data Sheet at the end of this Section, including those referencing ASTM classifications for Type, Grade, Class and Uses.
a. Additional Movement Capability: Where additional movement capability is specified in Elastomeric Glazing Sealant Product Data Sheet, provide products, when tested for adhesion and cohesion under maximum cyclic movement per ASTM C 719, with the capability to withstand the specified percentage change in the joint width existing at time of installation and remain in compliance with other requirements of ASTM C 920 for uses indicated.
2. Glazing Sealant for Fire-Resistant Glazing Products: Identical to product used in test assembly to obtain fire-resistive rating.

J. Miscellaneous Glazing Materials:
1. General: Provide products of material, size, and shape complying with referenced glazing standard, requirements of manufacturers of glass and other glazing materials involved for glazing application indicated, and with a proven record of compatibility with surfaces contacted in installation.
2. Cleaners, Primers and Sealers: Type recommended by sealant or gasket manufacturer.
3. Setting Blocks: Elastomeric material with a Shore A durometer hardness of 85 plus or minus 5.

4. Spacers: Elastomeric blocks or continuous extrusions with a Shore A durometer hardness required by glass manufacturer to maintain glass lites in place for installation indicated.

PART 3 – EXECUTION

3.01 EXAMINATION

A. Examine glass framing, with glazier present, for compliance with the following:
   1. Manufacturing and installation tolerances, including those for size, squareness, offsets at corners.
   2. Presence and functioning of weep system.
   3. Minimum required face or edge clearances.
   4. Effective sealing between joints of glass-framing members.
   5. Do not proceed with glazing until unsatisfactory conditions have been corrected.

B. Preparation: Clean glazing channels and other framing members receiving glass immediately before glazing. Remove coatings that are not firmly bonded to substrates.

C. Glazing, General:
   1. Comply with combined recommendations of manufacturers of glass, sealants, gaskets, and other glazing materials, except where more stringent requirements are indicated, including those in referenced glazing publications.
   2. Glazing channel dimensions as indicated on Drawings provide necessary bite on glass, minimum edge and face clearances, and adequate sealant thicknesses, with reasonable tolerances. Adjust as required by Project conditions during installation.
   3. Protect glass from edge damage during handling and installation as follows:
      a. Use a rolling block in rotating glass units to prevent damage to glass corners. Do not impact glass with metal framing. Use suction cups to shift glass units within openings; do not raise or drift glass with a pry bar. Rotate glass lites with flares or bevels on bottom horizontal edges so edges are located at top of opening, unless otherwise indicated by manufacturer's label.
      b. Remove damaged glass from Project site and legally dispose of off site. Damaged glass is glass with edge damage or other imperfections that, when installed, weaken glass and impair performance and appearance.
   4. Apply primers to joint surfaces where required for adhesion of sealants, as determined by preconstruction sealant-substrate testing.
   5. Install elastomeric setting blocks in sill rabbets, sized and located to comply with referenced glazing standard, unless otherwise required by glass manufacturer. Set blocks in thin course of compatible sealant suitable for heel bead.
   6. Do not exceed edge pressures stipulated by glass manufacturers for installing glass lites.
   7. Provide spacers for glass sizes larger than 50 united inches (length plus height) as follows:
      a. Locate spacers inside, outside, and directly opposite each other. Install correct size and spacing to preserve required face clearances, except where gaskets and glazing tapes are used that have demonstrated ability to maintain required face clearances and comply with system performance requirements.
      b. Provide 1/8-inch minimum bite of spacers on glass and use thickness equal to sealant width. With glazing tape, use thickness slightly less than final compressed thickness of tape.
   8. Provide edge blocking to comply with requirements of referenced glazing publications, unless otherwise required by glass manufacturer.
   9. Set glass lites in each series with uniform pattern, draw, bow, and similar characteristics.

D. Sealant Glazing (Wet):

1. Install continuous spacers between glass lites and glazing stops to maintain glass face clearances and to prevent sealant from extruding into glass channel weep systems until sealants cure. Secure spacers in place and in position to control depth of installed sealant relative to edge clearance for optimum sealant performance.
2. Force sealants into glazing channels to eliminate voids and to ensure complete wetting or bond of sealant to glass and channel surfaces.
3. Tool exposed surfaces of sealants to provide a substantial wash away from glass. Install pressurized gaskets to protrude slightly out of channel to eliminate dirt and moisture pockets.

E. Protection and Cleaning:
1. Protect exterior glass from breakage immediately after installation by attaching crossed streamers to framing held away from glass. Do not apply markers to glass surface. Remove nonpermanent labels, and clean surfaces.
2. Protect glass from contact with contaminating substances resulting from construction operations including weld splatter. If, despite such protection, contaminating substances do come into contact with glass, remove them immediately as recommended by glass manufacturer.
3. Examine glass surfaces adjacent to or below exterior concrete at frequent intervals during construction, but not less than once a month, for build-up of dirt, scum, alkali deposits, or stains, and remove as recommended by glass manufacturer.
4. Remove and replace glass that is broken, chipped, cracked, abraded, or damaged in any way, including natural causes, accidents and vandalism, during construction period.
5. Wash glass on both faces in each area of Project not more than 4 days prior to date scheduled for inspections that establish date of Substantial Completion. Wash glass as recommended by glass manufacturer.

END OF SECTION

SECTION 08 9100 – LOUVERS

PART 1 – GENERAL

1.01 SECTION INCLUDES

A. Louvers, frames, and accessories.

1.02 REFERENCE STANDARDS

AAMA 611	Voluntary Specification for Anodized Architectural Aluminum; American Architectural Manufacturers Association
AAMA 2604	Voluntary Specification, Performance Requirements and Test Procedures for High Performance Organic Coatings on Aluminum Extrusions and Panels
AAMA 2605	Voluntary Specification, Performance Requirements and Test Procedures for Superior Performing Organic Coatings on Aluminum Extrusions and Panels
AMCA 500-L	Laboratory Methods of Testing Louvers for Rating; Air Movement and Control Association International, Inc.
AMCA 511	Certified Ratings Program Product Rating Manual for Air Control Devices
ASTM A653/A653M	Steel Sheet, Zinc-Coated (Galvanized) or Zinc-Iron Alloy-Coated (Galvannealed) by the Hot-Dip Process
ASTM A666	Annealed or Cold-Worked Austenitic Stainless Steel Sheet, Strip, Plate, and Flat Bar
ASTM B209	Aluminum and Aluminum-Alloy Sheet and Plate
ASTM B209M	Aluminum and Aluminum-Alloy Sheet and Plate [Metric]
ASTM B221	Aluminum and Aluminum-Alloy Extruded Bars, Rods, Wire, Profiles, and Tubes
ASTM B221M	Aluminum and Aluminum-Alloy Extruded Bars, Rods, Wire, Profiles, and Tubes [Metric]

1.03 SUBMITTALS

A. See Section 01 3300 – Submittal Procedures.

B. Product Data: Provide data describing design characteristics, maximum recommended air velocity, design free area, materials, and finishes.

C. Shop Drawings: Indicate louver layout plan and elevations, opening and clearance dimensions, tolerances; head, jamb, and sill details; blade configuration, screens, blank-out areas required, and frames.

D. Samples: Submit two samples 2 by 2 inches in size illustrating finish and color of exterior and interior surfaces.

E. Test Reports: Independent agency reports showing compliance with specified performance criteria.

F. Manufacturer's Certificate: Certify that products meet or exceed specified requirements.

G. Maintenance Data: Include lubrication schedules, and adjustment requirements.

1.04 QUALITY ASSURANCE

A. Manufacturer Qualifications: Company specializing in manufacturing products of the type specified in this section, with minimum three years of documented experience.

1.05 WARRANTY

A. Provide twenty-year manufacturer warranty against distortion, metal degradation, and failure of connections.

PART 2 – PRODUCTS

2.01 MANUFACTURERS

A. Wall Louvers:
   1. Airolite Company, LLC
   2. American Warming and Ventilating
   3. Construction Specialties, Inc
   4. Pottorff
   5. Or ENGINEER-approved equal.

2.02 LOUVERS

A. Louvers: Factory fabricated and assembled, complete with frame, mullions, and accessories; AMCA Certified in accordance with AMCA 511.
   1. Wind Load Resistance: Design to resist positive and negative wind load of 25 psf without damage or permanent deformation.
   2. Intake Louvers: Design to allow maximum of 0.01 oz/sq. ft water penetration at calculated intake design velocity based on design air flow and actual free area, when tested in accordance with AMCA 500-L.
   3. Drainable Blades: Continuous rain stop at front or rear of blade aligned with vertical gutter recessed into both jambs of frame.
   4. Screens: Provide insect screens at intake louvers and bird screens at exhaust louvers.
   5. Hinged Units: Provide secondary frame to which louver frame is attached; non-ferrous hinges.

B. Stationary Louvers: Horizontal blade, extruded aluminum construction, with intermediate mullions matching frame.
   1. Free Area: 50 percent, minimum.
   2. Static Pressure Loss: 0.15 inch wg maximum per square foot of free area at velocity of 1000 fpm, when tested in accordance with AMCA 500-L.
   3. Blades: Straight.
   4. Frame: 4 inches deep, channel profile; corner joints mitered and, with continuous recessed caulking channel each side.
   5. Metal Thickness: Frame 0.081 inch; blades 0.081 inch.
   6. Finish: Color anodized; finish welded units after fabrication.
   7. Color: As scheduled.

C. Operable Louvers: Operable horizontal blades, extruded aluminum construction.
   1. Free Area: 50 percent, minimum.
   2. Static Pressure Loss: 0.15 inch wg maximum per square foot of free area at velocity of 1000 fpm, when tested in accordance with AMCA 500-L.
   3. Operation: Gravity balanced, 90-degree opening. with adjustment device to permit setting for varying differential static pressure.
   4. Operation: Actuator provided in HVAC control system.
   5. Movable Blades: Straight, pivoted at, with vinyl, rubber, or polyethylene blade edge and jamb seals; rattle-free linkage.
   6. Fixed Blades: Straight.
   7. Frame: 4 inches deep, channel profile; corner joints mitered and, with continuous recessed caulking channel each side.

8. Metal Thickness: Frame 0.081 inch; blades 0.081 inch.
9. Finish: Color anodized; finish welded units after fabrication.
10. Color: As scheduled.

D. Acoustical Louvers: Horizontal blade, formed aluminum sheet construction.
1. Sound Attenuation: Minimum sound transmission loss of 10 db at 63 Hz, when tested in accordance with ASTM E90.
2. Free Area: 50 percent, minimum.
3. Static Pressure Loss: 0.15 inch wg maximum per square foot of free area at velocity of 1000 fpm, when tested in accordance with AMCA 500-L.
4. Blades: Straight, sloped at 45 degrees, with insulating material in cavity, lower surface covered with perforated sheet metal of same type as blades.
5. Metal Thickness: Frame 0.081 inch; blades 0.081 inch.
6. Finish: Color anodized; finish welded units after fabrication.

2.03 MATERIALS

A. Extruded Aluminum: ASTM B221 (ASTM B221M)
1. Color Anodizing: AAMA 611 Class I, AA-M12C22A42/44.
2. Clear Anodizing: AAMA 611 Class I, AA-M12C22A41.

B. Formed Aluminum: Formed sheet, ASTM B209 (ASTM B209M).
1. Color Anodizing: AAMA 611 Class I, AA-M12C22A42/44.
2. Clear Anodizing: AAMA 611 Class I, AA-M12C22A41.

C. Steel Sheet: Hot-dipped galvanized steel sheet, ASTM A653/A653M, with G90/Z275 coating.

D. Stainless Steel: ASTM A666 Type 304, soft temper, smooth surface, No. 4 finish.

E. Bird Screen: Interwoven wire mesh of steel, 0.063-inch diameter wire, ½-inch open weave, diagonal design.

F. Insect Screen: 18 x 16 size aluminum mesh.

G. Polyvinylidene Fluoride Coating: Minimum 70 percent Kynar 500/Hylar 500 resin, two-coat finish, complying with AAMA 2604.

H. Primer: Zinc chromate, alkyd type.

2.04 ACCESSORIES

A. Blank-Off Panels: Same material as louver, painted black on exterior side; provide where duct connected to louver is smaller than louver frame, sealing off louver area outside duct.

B. Screens: Frame of same material as louver, with reinforced corners; removable, screw attached; installed on inside face of louver frame.

C. Fasteners and Anchors: Galvanized steel.

D. Flashings: Of same material as louver frame, formed to required shape, single length in one piece per location.

PART 3 – EXECUTION

3.01 EXAMINATION

A. Verify that prepared openings and flashings are ready to receive work and opening dimensions are as indicated on shop drawings.

B. Verify that field measurements are as indicated.

3.02 INSTALLATION

A. Install louver assembly in accordance with manufacturer's instructions.

B. Coordinate with installation of flashings by others.

C. Install louvers level and plumb.

D. Align louver assembly to ensure moisture shed from flashings and diversion of moisture to exterior.

E. Secure louver frames in openings with concealed fasteners.

F. Install perimeter sealant and backing rod in accordance with manufacturer’s instructions, unless instructed otherwise.

G. Coordinate with installation of mechanical ductwork.

H. Coordinate with installation of louver actuators.

3.03 ADJUSTING

A. Adjust operable louvers for freedom of movement of control mechanism. Lubricate operating joints.

3.04 CLEANING

A. Strip protective finish coverings.

B. Clean surfaces and components.

3.05 SCHEDULES

A. Aeration Building - South Wall: Intake acoustical louver, hinged bird screen, prefinished to match adjacent window frames.

END OF SECTION

SECTION 09 2200 – SUPPORTS FOR PLASTER AND GYPSUM BOARD

PART 1 – GENERAL

1.01 THE REQUIREMENT

A. Furnish and install furring and lath at Portland Cement plaster, sheet underlayment and related cement plaster and metal accessories in accordance with the Contract Documents.

1.02 RELATED WORK

A. Section 09 29 00 – Gypsum Board

1.03 SUBMITTALS

A. Submittals shall be furnished in accordance with Section 01 33 00 – Submittal Procedures.

B. Product Data: Manufacturer's published literature containing complete description for lath, metal accessories.

C. Samples Metal Accessories: As requested by ENGINEER.

1.04 QUALITY ASSURANCE

A. Regulatory Requirements: Comply with requirements of SFBC Article 25, except as otherwise specified.

B. Industry Standards: Comply with applicable requirements of ASTM C847 and ASTM C1068.

C. The manufacture shall provide a 2-year equipment warranty.

1.05 DELIVERY, STORAGE AND HANDLING

A. Protect metal lath, metal suspension materials and metal accessories from dampness or wetting.

B. Comply with the additional requirements specified in Section 01 62 00 – Product Options.

PART 2 – PRODUCTS

2.01 MANUFACTURERS

A. Furring and Lathing Materials: Amico, Cemco, United States Gypsum, Western Metal Lath or ENGINEER approved equal.

2.02 METAL COMPONENTS

A. Rib Lath: Expanded galvanized-steel sheets, 3.4 pounds per square yard, with 3/8-inch ribs and Kraft paper backing conforming to FS UU-B-790z, Type I, Grade D.

B. Flat Expanded Lath: ASTM C847; self-furring diamond mesh, 2.4 pounds per square yard. Provide with indentations 3½ inches horizontally and maximum 2 inches vertically, or with ¼-inch self-furring groove rolled lengthwise of sheet at maximum 6 inches on center, to hold mesh ¼-inch away from supporting surface.

C. Reinforcing Lath: Fabricate from copper-bearing steel and weighing not less than 2.5 pounds per square yard.

D. Metal Accessories:

1. General:
   a. Except as otherwise specified, products shall conform to material for accessories of ASTM C1063.
   b. Shapes Used as Grounds: Size and dimension to provide for required plaster thicknesses.

c. Flanges:
1) Design to permit complete embedment of accessory in plaster thickness.
2) Provide for alignment and attachment to underlying surface.
d. Provide in maximum possible lengths.
e. Where dimension or profile, is deferred to Drawings and information is not on the Drawings confer with ENGINEER to determine required dimension or profile.
f. Although several manufacturers are listed, endeavor to use products of a single manufacturer to the greatest extent possible.

2. Casing Beads: Model SFC by Stockton Products or ENGINEER approved equal.
3. External Corner Aids: Form from expanded-metal lath with flanges at least 2½ inches wide; “KwickCorner: with “EPKote” by K-Lath, Stockton Products or ENGINEER approved equal. Except where specified do not use corner beads.
4. External Corner Beads: Small, rigid nosed, not exceeding 3/16-inch, with expanded flange at least 2½ inches wide.
5. Control Joints:
a. Return Lip Type with Removable Tape: No. XJ15-3 by Western Metal Lath or ENGINEER approved equal.
b. Narrow “V” type, Model NVS by Stockton products or ENGINEER approved equal.
6. Expansion Joints: Variable, 2-piece No. 40 by Western Metal Lath or ENGINEER approved equal.
7. Drip Screed
8. Foundation: No. 7 by Stockton Products or ENGINEER approved equal.
a. Soffit: No. 5 Drip by Stockton Products or ENGINEER approved equal.
b. Soffit Vent: Stockton Products or ENGINEER approved equal. Width as indicated on the Drawings.
9. Reveals: As indicated on the Drawings.

E. Fasteners: Powder-driven fasteners and screws as recommended by finish material manufacturer.

F. Provide miscellaneous components required for completion of installation.

G. Protective Finishes: Galvanize all metal lath, furring and ferrous items, unless otherwise indicated.

1. Fabricate metal lath and furring from galvanized sheet steel complying with ASTM A 653.
2. Galvanize inserts, hangers, channels and other similar items by the hot-dip process ASTM A 123.
3. Touch up abraded protective finishes with one (1) coat of rust-inhibitive primer at site before installation.

H. Tie Wire: ASTM A 641 0.0625-inch nominal diameter minimum (No. 16 W&M gauge).

2.03 UNDERLAYMENT AND FLASHING

A. Sheet Underlayment: Asphalt-saturated Kraft paper complying with FS UU-B-790a, Type I, Grade D, Style 2, 60-minute; “Super Jumbo Tex” by Fortifiber Corp. or ENGINEER approved equal.

PART 3 – EXECUTION

3.01 EXAMINATION

A. Examine supporting structure and conditions under which metal lath and furring will be installed.

B. Verify that support framing is spaced in accordance with code requirements.

3.02 INSTALLATION OF UNDERLAYMENT AND FLASHING

A. Sheet Underlayment:

1. Apply one (1) layer of specified underlayment over sheathing.
   a. Securely staple to substrate.
   b. Apply horizontally over entire surface in shingle fashion, lapping courses minimum 3 inches.
   c. Stagger vertical joints.
2. Install additional layer of underlayment paper in 19-inch-wide strip at internal and external building corners. Saddle over top of parapets and walls.
3. Lap vertical joints minimum 6 inches.
4. Securely staple to substrate.

3.03 INSTALLATION OF METAL LATH

A. General: Comply with requirements of “Plaster and Lathing Systems Manual.”

1. Install furring and lathing in accordance with ASTM C 1063.
2. Install interior furring and lathing in accordance with ASTM C 841.

B. Rib Lath:

1. Install at soffits and similar horizontal surfaces.
2. Secure to framing backup with screws or staples, keeping away from surface of paper underlayment.
3. Stagger ends of lath to avoid continuous joints on same support. Lap ends at supports.
4. Lap at sides at least ½-inch and at ends at least 1-inch.

C. Flat Expanded Lath:

1. Apply lath over underlayment with long dimension at right angles to supports, attaching to each support at 6-inch intervals.
2. Secure with pan-head, noncorrosive screws of sufficient length to penetrate through underlayment if lath is not self-furring.
3. Stagger ends of lat to avoid continuous joints on same support. Lap ends at supports.
4. Lap at sides at least ½-inch and at ends at least 1-inch.

3.04 INSTALLATION OF METAL ACCESSORIES

A. General:

1. Fasten in place using wire ties, galvanized staples or power fasteners as required to prevent dislodging or misalignment by subsequent operations. Corner aid and control and reveal joints shall be wire tied or power fastened.
2. Fasten at both ends and maximum 12 inches on center along sides.
3. Bring grounding edge of accessories to true lines, plumb, level and straight.
4. Install accessories to provide required depth of plaster and to bring plaster surface to required plane.
5. Connect lengths of accessories to assure a continuous line.
6. Where plaster abuts dissimilar materials, terminate with plaster casing bead.

7. Install accessory beads to provide minimum 1/8-inch clearance between structural units and termination point of surface to receive plaster finish.
8. Provide diagonal strip reinforcing at corners of windows and other openings.

B. Control, Expansion and Reveal Joints:

1. Install at locations and at spacing shown on the Drawings by wire tying to metal lath. If not shown, space control joints, as directed by Architect or Engineer, so as to provide plaster panels not exceeding 144 square feet, with no dimension exceeding 18-feet or a length-to-width ratio of 2½:1.
2. Set control joints to serve as grounds for plaster.
3. Expansion Joints: Install double studs. Do not cut underlayment.

C. Cornerite:

1. Install at plastered interior angles where both converging wall surfaces are plastered.
2. Do not install:
   a. Where metal lath continues onto converging surfaces of an angle at least 4 inches.
   b. Where juncture of abutting surfaces is to be unrestrained.
3. Fasten along outer edges of lat only to secure firmly in position.
4. Fasten to lath only not to structural framing.

D. Corner Beads: Provide at plastered external angles where plastered on both sides of angles.

E. External Corner Aids: Provide at external angles where plastered on both sides of angles.

F. Weep Screeds:

1. Install foundation weep screed at bottom of walls.
2. Install soffit weep screed where indicated on the Drawings.

END OF SECTION

SECTION 09 2900 – GYPSUM BOARD

PART 1 – GENERAL

1.01 THE REQUIREMENT

A. Furnish and install all the gypsum wallboard finish complete with related metal components, accessories, and finish surfaces in accordance with the Contract Documents.

1.02 SUBMITTALS

A. Submittals shall be furnished in accordance with Section 01 3300 – Submittal Procedures.

B. Test Reports: Submit copies of fire test report on fire rated wallboard assemblies. Submit copies of evidence of fire hazard classification for wallboard. Certified test reports of other acceptable testing agencies, which perform testing in accordance with ASTM E119, E84 and E90 are acceptable.

C. Certificates: Furnish manufacturer's certification that materials meet or exceed Specification requirements.

D. Manufacturer's Instruction: Furnish manufacturer's printed instructions for installation of assemblies.

E. Samples: Provide sample of texture finishes for Architect's approval.

1.03 QUALITY ASSURANCE

A. Manufacturers: Wallboard components shall be as manufactured by U.S. Gypsum Company, Domtar Gypsum, National Gypsum Company, Georgia-Pacific, or Flintkote Blue Diamond. It is intended that all materials furnished be a part of a single system, whether it be supplied by one or several manufacturers.

B. ASTM C840, C754, and GA216, insofar as any portions are applicable, are hereby made a part of this Specification as though repeated herein. In case of conflicts, the more stringent requirements shall govern.

C. The manufacture shall provide a 2-year equipment warranty.

1.04 PRODUCT DELIVERY, STORAGE AND HANDLING

A. Deliver wallboard materials in manufacturer's unopened containers, packages or bundles identified with manufacturer's name, brand, type, and grade. Store inside dry areas and protect from dampness and deterioration. Protect redi-mixed products from freezing and protect metal accessories from rusting. Remove damaged or deteriorated materials from the premises.

B. Deliver fire-rated materials bearing testing agency label and required fire classification number.

1.05 JOB CONDITIONS

A. Temperature and humidity conditions: Do not install wallboard unless installation areas comply with the minimum temperature and ventilation requirements recommended by the manufacturer.

B. Protection: Protect work installed by other trades previous to work under this Section. Replace any work damaged without added cost. Provide closures for exterior openings, where required. Room temperature during installation of wallboard shall not be less than 50°F with adequate ventilation maintained to eliminate excessive moisture until joint compound is completely dry. Protect wallboard from wetting and replace any damaged material.

C. Provide ventilation during and following adhesives and joint treatment applications. Use temporary air circulators in enclosed areas lacking natural ventilation. Under slow drying conditions, allow additional drying time between coats of joint treatment. Protect installed materials from drafts during hot, dry weather.

PART 2 – PRODUCTS

2.01 GYPSUM WALLBOARD

A. Regular Wallboard: ASTM C36 or FS SS-L-30, Type III, Grade R, Class I 5/8-inch thickness, tapered edge.

B. Fire Rated Wallboard: ASTM C36, Type X or FS SS-L-30, Type III, Grade X, Class I 5/8-inch thickness, tapered edge.

C. Water Resistant Wallboard: ASTM C630, Type X, Grade R, 5/8-inch thickness, tapered edge.

D. Backing Board: ASTM C442, Type X, Grade R or FS SS-L-30, Type IV, Grade R or X, Class I 5/8-inch thickness, square, tongue and grooved edge.

E. Exterior Wallboard: U.S. Gypsum Company exterior gypsum ceiling board, ½-inch thickness or conforming to ASTM C931.

2.02 GYPSUM ACCESSORIES

A. Corner Bead Reinforcement: ANS CB 114 x 114

B. Metal Edge Reinforcement: ANS L12 or L58; or ANS U12 or U58

C. Control Joint: U.S. Gypsum Company, No. 093

2.03 FASTENERS

A. Nails: Annular ring shank nail GWB 54, ASTM C514:

1. 1¼-inch for ½-inch wallboard
2. 13/8-inch for 5/8-inch wallboard or smooth shank nail
3. 13/8-inch for ½-inch wallboard
4. 1½-inch for 5/8-inch wallboard

B. Screws: Self-drilling, self-tapping, bugle head for use with power driven tool.

1. Type S for application to light gauge metal framing minimum 1-inch
2. Type 9-12 for application to heavy gauge metal framing conforming to ASTM C646
3. Type W for application to wood framing minimum 1½-inch single layer 15/8-inch double layer conforming to ASTM C894
4. Type G for wallboard to wallboard application minimum 1½-inch ASTM C893.

C. Staples: Number 16 USS gauge flattened galvanized wire staples with 7/16-inch wide crown outside measure and divergent point for first ply only of 2-ply gypsum wallboard application.

1. 1-inch long legs for 3/8-inch thick gypsum wallboard
2. 1-inch long legs for ½-inch thick gypsum wallboard
3. 1¼-inch long legs for 5/8-inch thick gypsum wallboard

2.04 LAMINATING ADHESIVES

A. Wallboard to Wood or Metal Framing: U.S. Gypsum Durabond 200 or 300 or conforming to ASTM C557 for wood framing.

B. Wallboard to Wallboard: U.S. Gypsum Durabond 600.

C. Wallboard to Coreboard or Sound Deadening Boards: U.S. Gypsum Durabond 600.

D. Wallboard to Concrete or Masonry: U.S. Gypsum Durabond 500.

2.05 SUSPENDED CEILING COMPONENTS

A. Furring Channels: Type DWC as manufactured by U.S. Gypsum Company or rigid furring channels conforming to ASTM C645.

B. Main Runner Channels: Cold rolled sections 1½-inch formed of No. 16 gauge steel painted with rust inhibiting paint.

C. Hanger Wires: Sizes specified double annealed and galvanized conforming to FS OO-W-461, Type I.

2.06 FINISHING MATERIALS

A. Joint treatment system shall be Perf-A-Tape joint system consisting of:
   1. Perf-A-Tape reinforcement tape
   2. Perf-A-Tape all-purpose ready-mixed compound for embedding, fill and finishing

B. Joint treatment system shall consist of:
   1. Joint tape shall be perforated conforming to ASTM C475 or FS SS-J-570, Type II
   2. Joint compound shall be powdered or ready-mixed conforming to ASTM C475 or FS SS-J-570, Type I. Taping and topping joint compound or all-purpose joint compound may be used.

2.07 TEXTURE FINISH

A. Wall texture material shall be light orange peel finish.

PART 3 – EXECUTION

3.01 INSTALLATION – SUSPENDED CEILINGS

A. Except where otherwise indicated, provide 1½-inch main runner channels spaced on 4-foot centers and metal furring channels spaced on not over 16-inch centers. Neither main runners nor cross furring shall be let into nor come in contact with abutting masonry walls or partitions. Locate a main runner within 6-inch of the wall to support the ends of the furring channels and locate hangers to support the ends of the main runners.

B. Where main runners or furring channels are spliced, overlap the ends not less than 8 inches and securely tie near each end of the splice with two (2) loops of 16-gauge galvanized wire.

C. Suspend main runners from structure above with one No. 9 hanger wire for each 12 square feet of ceiling area. All wire hangers shall be of such length so that the lower ends may be saddle tied or wrapped around the main runners so as to prevent turning or twisting of the runners.

D. At steel beams joists or other steel construction wrap hangers around, inset through or clip or bolt to the supports, so as to develop the full strength of the hangers.

E. For wood construction, inset wire hangers in holes drilled, a minimum of 3 inches above bottom of joists and with the upper end of the hanger in each case, twisted 3 times around itself or attach wire hangers to 30D nails, driven on a downward slant into sides of joists, allowing 3-inch penetration into the wood, driving nails at least 5 inches from bottom edges and not over 36 inches o.c. with the upper end of the hanger in each case twisted 3 times around itself or use four (4) 1½-inch No. 9 gauge wire staples, to secure hangers to the sides of the joists, driving staples horizontally or on a downward slant 3 inches near the upper edge of the loop and the fourth to fasten the loose end.

F. For cast-in-place concrete, install hanger wires in the formwork using double looped hangers. Special insets, at least equivalent in strength to the hangers to which the hangers can later be attached, may be inserted through, or attached to the top of the forms in lieu of anchoring the hangers directly in the concrete.

G. Securely clip metal furring channels to main runners using furring channel clips or saddle tie with 2 strands of 16-gauge tie wire. Install furring channel clips on alternate sides of the main runner channel.

H. Lights or other openings that interrupt the main runner or furring channels reinforce grillage with ¾-inch cold rolled channels, wire tied atop and parallel to the main runner channels.

I. Apply wallboard with long dimension at right angles to the furring channels, with all abutting ends and edges occurring over the web surface of the furring channel. Use wallboard of maximum possible length to minimize end joints. Neatly fit and stagger end joints. Install wallboard with 1-3/8-inch screws spaced 8 inches o.c. in the field of the board, at all bearings and along abutting edges. Install control joints as specified below for walls.

J. Where indicated for wallboard applied direct to bottom chord of steel joist, install rigid furring channels at right angles to joists located on 16-inch centers. Attach using clips or with two strands of 16-gauge tie wire.

3.02 INSTALLATION – WALLS

A. Apply wallboard with long dimension at right angles to framing or furring members with all abutting ends and edges occurring over stud flanges. Use wallboard of the maximum practical length to minimize end joints. Neatly fit and stagger end joints. Arrange joints on opposite sides of the partition so as to occur on different studs. Cut wallboard neatly to fit around all openings. The wallboard is to extend within ¼-inch of the floor.

B. Wherever wallboard terminates against dissimilar materials or where edges of wallboard are exposed, install metal edge reinforcement as specified. At all outside corners, install metal corner bead reinforcement as specified.

C. Install control joint over face of wallboard panels. Cut end joints square, butt together and align to provide neat fit. Attach control joint to wallboard with Bostitch 9/16” Type G Staples spaced not over 6 inches on center in each flange. Locate in accordance with USG Gypsum Construction Handbook, 2nd Edition.

D. At metal studs apply wallboard using screws spaced a maximum of 12 inches o.c. in the field of the board and 12 inches o.c. along the abutting end joints 8 inches o.c. at rated walls.

E. At wood framing, apply wallboard with double nailing method. Apply first nails spaced 12 inches o.c. with the second nails in close proximity (2 inches). Nails shall not be staggered on adjoining edges or ends. While the nails are being driven, hold the wallboard in firm contact with the underlying support. Nail from central portion of the wallboard toward ends and edges. Nails shall be driven home with the heads slightly below the surface of the wallboard, in a dimple formed by the driving tool stubbing the last blow. A nail set shall not be used and care shall be taken to avoid breaking the paper face.

F. Where W/R wallboard is used, coat all cut edges and fastener heads with USG sheetrock W/R sealant. Treat all cut edges, utility holes and joints, including those at angle intersections prior to installation. Treat fastener heads after installation.

G. Remove any excess of sealant or smears as work progresses.

H. Provide perimeter relief where non-load bearing wallboard partitions abut structural decks or ceilings or vertical structural elements. Allow not less than ¼-inch nor more than ½-inch gap between wallboard and structure. Finish edges of wallboard face layer with square nose metal casing head and caulk space between casing bead and structure with continuous sealant bead. Attach wallboard to studs not less than ½-inch below bottom edge of ceiling track flanges and to first stud adjacent to vertical tracks. Do not attach wallboard directly to tracks.

I. Where wallboard partitions intersect masonry walls, provide control joint no less than ¼-inch, nor more than ½-inch wide between wallboard and masonry. Finish exposed edges of wallboard with square nose metal casing bead and caulk space between casing bead and masonry with continuous sealant bead.

J. Install exterior ceiling board allowing 1/16-inch to 3/8-inch space between butt and ends of board. Fasten to supports with screws spaced 12 inches o.c. or nails spaced 8 inches o.c. For metal framing use 1-inch Type S screws. For wood framing use 1¼-inch Type W screws or 1½-inch galvanized box or aluminum nails. Conceal panel joints by installing panels with ends installed into aluminum H moldings. Fasten H moldings to support with screws spaced 12 inches o.c. or nails spaced 8 inches o.c.

3.03 FINISHING

A. Reinforce wall and ceiling angles and inside vertical corner angles with tape folded to conform to the adjoining surface and to form a straight, true angle. Apply a thin uniform layer of compound, approximately 3 inches wide, under and over the tape in the angle joint to be reinforced. Center tape over all joints to be reinforced and seal into the compound, leaving sufficient compound under the tape to provide proper bond. Apply a skim coat of compound immediately after embedding tape. Clean excess compound from the wallboard surface. After drying, cover embedding compounds with an additional coat of compound.

B. Allow joints to dry thoroughly (minimum 24 hours) between each application of compound.

C. All joints shall have tape embedded, filled, and finished using specified compound.

D. Cover fill coat with compound spread evenly over and slightly beyond the tapered edge of the board, feathered at the edges with a smooth uniform slight crown over the joint. All dimples at fastener heads shall receive 3 coats of compound in succession as used in joints.

E. Conceal flanges of all metal corner and edge reinforcing by at least 2 coats of compound. When completed, the compound shall extend approximately 8 inches to 10 inches on either side of the exposed metal nosing.

F. Sand all coats as necessary after each application of compound has dried. The final coat and subsequent sanding shall leave all wallboard and treated areas uniformly smooth and ready to receive the decoration, to the extent that after painting of wallboard there shall be no distinguishable difference in appearance between taped and untapped surface.

G. At areas of Wonderboard, fill all joints and corners with pre-sanded dry set or latex Portland Cement mortar into which embed a 2-inch-wide coated glass fiber tape using a skim coat of mortar.

H. Apply wall texture to all exposed walls, except walls to receive wall coverings and toilets, upon completion of finishing specified above. Surfaces shall be free of dust, dirt, and oil before application. Mix material in a clean power mixer with water in the ratio of 5 gallons per 45-pound bag for a period of 10 minutes. After mixing, add additional water to yield desired consistency. Use as heavy a mixture as practical and avoid over thinning of the material. Apply material using spray equipment capable of developing sufficient pressure to produce a fine sand texture finish.

END OF SECTION

SECTION 09 3000 - CERAMIC TILE

PART 1 - GENERAL

1.01 THE REQUIREMENT

A. Furnish and install all ceramic tile and related items, in accordance with the Contract Documents.

B. Color Selection for tile and grout by Owner.

1.02 SUBMITTALS

A. Submittals shall be furnished in accordance with Section 013300 – Submittals.

B. Furnish Master Grade Certificate for all tile before installation bearing the Certification Mark of the TCA, signed by the manufacturer stating the type and quantity of the material.

C. Furnish manufacturer's printed instructions for use of latex Portland Cement and mortar.

D. Extra stock: Provide 2 cartons of ceramic tile for future use.

1.03 QUALITY ASSURANCE

A. Standards: Materials, preparation and installation shall conform to ANSI Standards as listed and the detailed installation instructions of the material manufacturer insofar as applicable.

B. Installation of Ceramic Tile with Portland Cement Mortar: ANSI A 108.1

C. Installation of Ceramic Tile with Organic Adhesive: ANSI A 108.4

D. Installation of Ceramic Tile with Dry-Set Mortar: ANSI A 108.5

E. Referenced Specifications, insofar as any portions are applicable, are hereby made a direct part of this Specification as though repeated herein.

1.04 PRODUCE DELIVERY, STORAGE AND HANDLING

A. Deliver tile to the job in unopened cartons sealed with a grade seal-bearing name of manufacturer and the words "Standard Grade" printed thereon.

B. Manufactured mortars and grouts shall contain hallmark certifying compliance with referenced standards and be types recommended by tile manufacturer for specific applications.

C. Adhesives shall be in containers labeled with hallmark certifying compliance with referenced standards.

D. Organic adhesive containers to bear hallmark of either adhesive and sealant council or TCA certifying compliance with ANSI A 136.1.

E. Deliver mastic grout ready for use.

F. Delivery dry-set mortar in sealed, moisture proof containers.

G. Store materials under cover in manner to prevent damage or contamination.

1.05 JOB CONDITIONS

A. Set and grout tile in epoxy or Portland cement mortar when surface temperature is at least 50 degrees Fahrenheit and rising.

B. Comply with minimum temperature recommendations of manufacturer's for bonding and grouting materials in other than Portland cement mortar.

C. Protect adjoining work surfaces before tile work begins.

1.06 INSPECTION

A. Inspect surfaces to receive tile before staring installation. Notify the DESIGN/BUILDER in writing of any defects or conditions that will prevent satisfactory tile installation. Starting of work will imply acceptance of surfaces to receive tile.

B. Close areas in which tile is being set to traffic and other work. Keep closed until tile is firmly set, minimum time of 3 days. Protect tile work from damage until acceptance.

PART 2 - PRODUCTS

2.01 MATERIALS

A. All this shall be domestic manufacture, Standard Grade, meeting the requirements of SPR-R-61 of the U.S. Department of Commerce and shall comply with ANS A 137.1. TCA Certification mark shall appear on each carton label.

B. Floor tile shall be Standard Grade, Unglazed Dust Pressed Porcelain Type, not less than ¼-inch thick with cushion edges and in nominal face sizes of 2-inch x 2-inch in colors selected. Tile shall comply with Section 5.1 of ANSI A 137.1. Provide all necessary shapes and trimmers of similar tile as required.

C. Wall tile shall be Standard Grade Glazed Tile not less than 5/16 inches thick with cushion edges, a colored matt glazed finish and in nominal face sizes of 4¼-inch x 4¼-inch. Provide spacer lugs or other similar features on edges of tile. Tile shall comply with Section 6.1 of ANSI A 137.1. Provide a A3401 base member at junction of floor and at internal corners ABL/R 3401 and ACL/4 3401 as applicable. At restrooms, provide contrasting color tile band in accordance with interior elevations.

D. Portland Cement: ASTM C 150, Type I

E. Aggregate: ASTM C 144 for mortar and grout

F. Hydrate Lime: ASTM C 206 or C 207, Type S

G. Water: Potable

H. Reinforcing: 2-inch x 2-inch, 16/6 gauge welded wire mesh

I. Membrane: 15-pound felt or 4-mil polyethylene film, furnish and install under this Section.

J. Glazed Tile Grout: Provide samples

K. Floor Tile Grout: Hydroment colored to match tile or darker than tile as selected from samples by Owner.

L. Dry Set Mortar: ANSI A 118-1

M. Latex Portland Cement Mortar: ANSI A 118.4

N. Organic Adhesive: ANSI A 136.1, Type I

O. Expansion Joints: Includes control, contraction and isolation joints

P. Sealant: Two (2) components complying with ASTM C 920, Type M, Class 25, Grade NS for joints in vertical services; Grade P. Use T for joints in horizontal surfaces.

Q. Back-up: Flexible compressible type of closed cell foam polyethylene or butyl rubber, rounded at surface to contact sealant, as shown in TCA details and as recommended by sealant manufacturer. It shall fit neatly into the joint without compacting and to such a height to allow a sealant depth of ½ the width of the joint. Sealant shall not bond to the back up material.

PART 3 - EXECUTION

3.01 INSTALLATION

A. Floors:

1. Install floors using Portland Cement mortar in accordance with ANSI A 108.1 and TCA methods F-111-85 over precast concrete or F-112-85 over cast-in-place concrete. Membrane is to be furnished and installed as a part of the work of this Section, Method F-111 just prior to tile installation.
2. Install floors using dry set mortar in accordance with ANSI A 108.5 and TCA method F-113-85.
3. Grout tile with specified grout, slightly depressed.
4. Slope floors uniformly to floor drains where required.
5. Provide expansion joints, control joints, contraction joints and isolation joints in accordance with TCA Method EJ-711-85.

B. Walls:

1. Install wall tile in organic adhesive in accordance with ANSI A-108.4 and TCA methods W-242-85 (metal studs) or W-223-85 (masonry and concrete).
2. Align all joints in wall tile vertically and horizontally.
3. Grout all tile with specified grout.
4. Provide expansion joints, control joints, contraction joints and isolation joints in accordance with TCA Method EJ-711-85.
5. Expansion Joints include control, contraction and isolation joints
6. Provide joints in all ceramic tile surfaces in accordance with TCA method EJ-711-85.
7. Joint width shall be ¼-inch minimum. Joints through tile and mortar directly over structural joints in the backing must be at least the width of the structural joints.

C. Installation:

1. Set back up when mortar is placed or utilize removable wood strip to provide space for back up after mortar has cured.
2. Install sealant after tile work and grout are dry. Follow sealant manufacturer's recommendations.

3.02 CLEANING AND PROTECTION

A. Clean tile after grouting and protect from other trades. Cure all ceramic tile floors for a minimum of 72 hours.

END OF SECTION

SECTION 09 5113 – ACOUSTICAL PANEL CEILINGS

PART 1 – GENERAL

1.01 RELATED DOCUMENTS

A. Drawings and general conditions of Contract, including General and Supplementary Conditions and Divisions-1 Specification sections apply to work of this section.

1.02 SUMMARY

A. Section Includes:
   1. Acoustical ceiling panels.
   2. Exposed grid suspension system.
   3. Wire hangers, fasteners, main runners, cross tees, and wall angle moldings.

B. Alternates: Submittals which do not provide adequate data for the product evaluation will not be considered. The proposed substitution must meet all requirements of this section, including but not necessarily limited to, the following: Panel design, size, composition, color, and finish; Suspension system component profiles and sizes; Compliance with the referenced standards.

1.03 REFERENCES

A. American Society for Testing and Materials (ASTM):
   1. ASTM A 1008 Standard Specification for Steel, Sheet, Cold Rolled, Carbon, Structural, High-Strength Low-Alloy and High-Strength Low-Alloy with Improved Formability.
   2. ASTM A 641 Standard Specification for Zinc-Coated (Galvanized) Carbon Steel Wire.
   3. ASTM A 653 Standard Specification for Steel Sheet, Zinc-Coated (Galvanized) by the Hot-Dip Process.
   4. ASTM C 423 Sound Absorption and Sound Absorption Coefficients by the Reverberation Room Method.
   5. ASTM C 635 Standard Specification for Metal Suspension Systems for Acoustical Tile and Lay-in Panel Ceilings.
   6. ASTM C 636 Recommended Practice for Installation of Metal Ceiling Suspension Systems for Acoustical Tile and Lay-in Panels.
   7. ASTM E 84 Standard Test Method for Surface Burning Characteristics of Building Materials.
   8. ASTM E 1414 Standard Test Method for Airborne Sound Attenuation Between Rooms Sharing a Common Ceiling Plenum.
   9. ASTM E 1111 Standard Test Method for Measuring the Interzone Attenuation of Ceilings Systems.
   10. ASTM E 1264 Classification for Acoustical Ceiling Products.
   11. ASTM E 1477 Standard Test Method for Luminous Reflectance Factor of Acoustical Materials by Use of Integrating-Sphere Reflectometers.
   12. ASTM D 3273 Standard Test Method for Resistance to Growth of Mold on the Surface of Interior Coatings in an Environmental Chamber.
   13. ASTM E 119 Standard Test Methods for Fire Tests of Building Construction and Material.

1.04 SUBMITTALS

A. Submittals shall be furnished in accordance with Section 013300 - Submittals.

B. Product Data: Submit manufacturer's technical data for each type of acoustical ceiling unit and suspension system required.

C. Shop Drawings: Layout and details of acoustical ceilings. Show locations of items which are to be coordinated with, or supported by the ceilings.

D. Certifications: Manufacturer's certifications that products comply with specified requirements, including laboratory reports showing compliance with specified tests and standards. For acoustical performance, each carton of material must carry an approved independent laboratory classification of NRC, CAC, and AC.

1.05 QUALITY ASSURANCE

A. Single-Source Responsibility: Provide acoustical panel units and grid components by a single manufacturer.

B. Fire Performance Characteristics: Identify acoustical ceiling components with appropriate markings of applicable testing and inspecting organization.
   1. Surface Burning Characteristics: As follows, tested per ASTM E 84 and complying with ASTM E 1264 for Class A products.
      a. Flame Spread: 25 or less
      b. Smoke Developed: 50 or less

C. Handle acoustical ceiling units carefully to avoid chipping edges or damaged units in any way.

1.06 DELIVERY, STORAGE, AND HANDLING

A. Deliver acoustical ceiling units to project site in original, unopened packages and store them in a fully enclosed space where they will be protected against damage from moisture, direct sunlight, surface contamination, and other causes.

B. Before installing acoustical ceiling units, permit them to reach room temperature and a stabilized moisture content.

C. Handle acoustical ceiling units carefully to avoid chipping edges or damaged units in any way.

1.07 PROJECT CONDITIONS

A. Environmental Requires:
   1. Verify weathertightness of area receiving suspension system prior to installation.
   2. Wet trades work to be thoroughly dry and complete prior to installation.
   3. Installation to begin only when temperature and humidity conditions closely approximate interior conditions which will exist when area is complete and occupied.
   4. Heating and air conditioning systems to be operating prior to, during, and after installation.

1.08 WARRANTY

A. Acoustical Panel: Submit a written warranty executed by the manufacturer, agreeing to repair or replace acoustical panels that fail within the warranty period. Failures include, but are not limited to:
   1. Acoustical Panels: Sagging and warping
   2. Grid System: Rusting and manufacturer's defects

B. Warranty Period:
   1. Acoustical panels: Ten (10) years from date of substantial completion.
   2. Grid: Ten (10) years from date of substantial completion.
   3. Acoustical panels and grid systems with HumiGuard Plus or HumiGuard Max performance supplied by one source manufacturer is fifteen (15) years from date of substantial completion.

C. The Warranty shall not deprive the Owner of other rights the Owner may have under other provisions of the Contract Documents and will be in addition to and run concurrent with

other warranties made by the CONTRACTOR under the requirements of the Contract Documents.

1.09 MAINTENANCE

A. Extra Materials: Deliver extra materials to Owner. Furnish extra materials described below that match products installed. Packaged with protective covering for storage and identified with appropriate labels.
   1. Acoustical Ceiling Units: Furnish quality of full-size units equal to 5.0 percent of amount installed.
   2. Exposed Suspension System Components: Furnish quantity of each exposed suspension component equal to 2.0 percent of amount installed.

PART 2 – PRODUCTS

2.01 MANUFACTURERS

A. Ceiling Panels:
   1. Armstrong World Industries, Inc. or equal.

2.02 ACOUSTICAL CEILING UNITS

A. Acoustical Panels Type ACT-1:
   1. Surface Texture: Medium
   2. Composition: Mineral Fiber
   3. Color: White
   4. Size: 48in X 24in X 3/4in or as shown on the plans.
   5. Edge Profile: Square Lay-In for interface with Prelude ML 15/16" Exposed Tee.
   6. Noise Reduction Coefficient (NRC): ASTM C 423; Classified with UL label on product carton, 0.50.
   7. Ceiling Attenuation Class (CAC): ASTM C 1414; Classified with UL label on product carton, 35
   8. Articulation Class (AC): ASTM E 1111; Classified with UL label on product carton N/A.
   9. Flame Spread: ASTM E 1264; Class A (UL)
   10. Light Reflectance (LR): ASTM E 1477; White Panel: Light Reflectance: 0.87.
   11. Dimensional Stability: HumiGuard Plus - temperatures up to 120 degrees F and high humidity excluding only exterior use, use over standing water, and direct contact with moisture .
   12. Mold/Mildew Inhibitor: The front and back of the product have been treated with BioBlock, a paint that contains a special biocide that inhibits or retards the growth of mold or mildew, ASTM D 3273.
   13. Acceptable Product: Armatuff, 860 as manufactured by Armstrong World Industries or equal.

2.03 SUSPENSION SYSTEMS

A. Components: All main beams and cross tees shall be commercial quality hot-dipped galvanized (galvanized steel, aluminum, or stainless steel) as per ASTM A 653. Main beams and cross tees are double-web steel construction with type exposed flange design. Exposed surfaces chemically cleansed, capping pre-finished galvanized steel (aluminum or stainless steel) in baked polyester paint. Main beams and cross tees shall have rotary stitching (exception: extruded aluminum or stainless steel).
   1. Structural Classification: ASTM C 635 Intermediate Duty.
   2. Color: White and match the actual color of the selected ceiling tile, unless noted otherwise.
   3. Acceptable Product: Prelude ML 15/16" Exposed Tee as manufactured by Armstrong World Industries, Inc.

B. High Humidity Finish: Comply with ASTM C 635 requirements for Coating Classification for Severe Environment Performance where high humidity finishes are indicated.
   1. SS Prelude Plus by Armstrong World Industries, Inc. - 100% Type 304 STAINLESS Steel.
   2. AL Prelude Plus by Armstrong World Industries, Inc. - all ALUMINUM
   3. Prelude Plus XL Fire Guard by Armstrong World Industries, Inc., G-60 Hot dipped galvanized /aluminum capping
   4. Structural Classification: ASTM C 635 duty class.
   5. Color: By Architect and Owner

C. Attachment Devices: Size for five times design load indicated in ASTM C 635, Table 1, Direct Hung unless otherwise indicated.

D. Wire for Hangers and Ties: ASTM A 641, Class 1 zinc coating, soft temper, pre-stretched, with a yield stress load of at least time three design load, but not less than 12 gauge.

E. Edge Moldings and Trim: Metal or extruded aluminum of types and profiles indicated or, if not indicated, manufacturer's standard moldings for edges and penetrations, including light fixtures, that fit type of edge detail and suspension system indicated. Provide moldings with exposed flange of the same width as exposed runner.

F. Accessories.

PART 3 – EXECUTION

3.01 EXAMINATION

A. Do not proceed with installation until all wet work such as concrete, terrazzo, plastering and painting has been completed and thoroughly dried out, unless expressly permitted by manufacturer's printed recommendations. (Exception: HumiGuard Max Ceilings)

3.02 PREPARATION

A. Measure each ceiling area and establish layout of acoustical units to balance border widths at opposite edges of each ceiling. Avoid use of less than half width units at borders, and comply with reflected ceiling plans. Coordinate panel layout with mechanical and electrical fixtures.

B. Coordination: Furnish layouts for preset inserts, clips, and other ceiling anchors whose installation is specified in other sections.
   1. Furnish concrete inserts and similar devices to other trades for installation well in advance of time needed for coordination of other work.

3.03 INSTALLATION

A. Install suspension system and panels in accordance with the manufacturer's instructions, and in compliance with ASTM C 636 and with the authorities having jurisdiction.

B. Suspend main beam from overhead construction with hanger wires spaced 4-0 on center along the length of the main runner. Install hanger wires plumb and straight.

C. Install wall moldings at intersection of suspended ceiling and vertical surfaces. Miter corners where wall moldings intersect or install corner caps.

D. For reveal edge panels: Cut and reveal or rabbet edges of ceiling panels at border areas and vertical surfaces.

E. Install acoustical panels in coordination with suspended system, with edges resting on flanges of main runner and cross tees. Cut and fit panels neatly against abutting surfaces. Support edges by wall moldings.

3.04 ADJUSTING AND CLEANING

A. Replace damaged and broken panels.

B. Clean exposed surfaces of acoustical ceilings, including trim, edge moldings, and suspension members. Comply with manufacturer's instructions for cleaning and touch up of minor finish damage. Remove and replace work that cannot be successfully cleaned and repaired to permanently eliminate evidence of damage.

END OF SECTION

SECTION 09 5300 – ACOUSTICAL CEILING SUSPENSION ASSEMBLIES

PART 1 – GENERAL

1.01 SUMMARY

A. Section Includes:
   1. Suspended metal grid ceiling system.

1.02 REFERENCES

A. ACI – American Concrete Institute
   1. 355.2 – Qualification of Post-Installed Mechanical Anchors in Concrete

B. ASCE – American Society of Civil Engineers

C. SEI – Structural Engineering Institute
   1. 7 – Minimum Design Loads for Buildings and Other Structures

D. ASTM International
   1. A 641 – Zinc-Coated (Galvanized) Carbon Steel Wire
   2. A 653 – Steel Sheet, Zinc-Coated (Galvanized) by the Hot-Dip Process
   3. A 1008 – Steel, Sheet, Cold Rolled, Carbon, Structural, High-Strength Low-Alloy
   4. C 635 – Metal Suspension Systems for Acoustical Tile and Lay-in Panel Ceilings
   5. C 636 – Installation of Metal Ceiling Suspension Systems
   6. E 488 – Strength of Anchors in Concrete Elements
   7. E 580 – Installation of Ceiling Suspension Systems for Acoustical Tile and Lay-in Panels in Areas Subject to Earthquake Ground Motions
   8. E 1190 – Strength of Power-Actuated Fasteners Installed in Structural Members

E. IBC – 2018 International Building Code, 24 CCR Part 2.
   1. Chapter 1 – Structural Design

F. ICC-ES – ICC Evaluation Service, International Code Council
   1. AC70 – Acceptance Criteria for Fasteners Power-Driven into Concrete, Steel and Masonry Elements
   2. AC193 – Mechanical Anchors in Concrete Elements
   3. AC368 – Acceptance Criteria for Suspended Ceiling Framing Systems

1.03 SUBMITTALS

A. Product Data: Submit manufacturer's specifications listing dimensions, load carrying capacity and compliance with specified standards, with project conditions and materials clearly identified or detailed for each required system.

B. Test and Evaluation Reports: From ICC-ES

C. Manufacturers' Instructions: For installation

D. Qualification Statements: For installer

1.04 QUALITY ASSURANCE

A. Installer's Qualifications: A firm that has successfully completed a minimum of five (5) previous projects similar in nature, size, and extent to this Project; is familiar with special requirements indicated; and has complied with requirements of authorities having jurisdiction

1.05 FIELD CONDITIONS

A. Verify weather tightness of area to receive suspension system prior to installation.

B. Wet trades work to be thoroughly dry and complete prior to installation.

C. Installation to begin only when temperature and humidity conditions closely approximate interior conditions which will exist when area is complete and occupied.

D. Heating and air conditioning systems to be operating prior to, during, and after installation.

PART 2 – PRODUCTS

2.01 MANUFACTURERS Products of following manufacturers form basis for design and quality intended.

1. Armstrong World Industries Inc, Lancaster, PA (ICC-ES ESR-1289). Product: Prelude XL, 15/16.

B. Or equal as approved in accordance with Division 01, General Requirements for substitutions.

2.02 SUSPENSION SYSTEM MATERIALS

A. Grid: ASTM C635, Armstrong Prelude Heavy Duty XL 15/16".
   1. Main Runners:
      a. Armstrong: Heavy Duty Prelude XL 7301, exposed T
   2. Cross Tees – "Stake-on end", Stepped End:
      a. Armstrong: XL7328 (24-inch grid), XL7341 (48 inch grid)
   3. Edge Trim:
      a. Armstrong Angle Molding: 7800, 7/8", Prelude with adapter clip,

2.2.1 REGULATORY REQUIREMENTS

A. Comply with IBC.

B. Nonstructural components permanently attached to buildings, and their supports and attachments, shall be designed and constructed to withstand the effects of earthquake motions in accordance with ASCE/SEI 7 with all the modifications incorporated in IBC Section 1616A. The seismic design category shall be determined in accordance with IBC Section 1613A.

C. Post installed anchors in concrete used for component anchorage shall be pre-qualified for seismic applications in accordance with ACI 355.2 or ICC-ES AC193, except that anchors pre-qualified for seismic applications need not be governed by the steel strength of a ductile steel element.

D. Power actuated fasteners in concrete or steel shall not be used for sustained tension loads or for brace applications in Seismic Design Categories D, E, or F unless approved for seismic loading, except as follows:
   1. Power actuated fasteners may be used in concrete where the service load on any individual fastener does not exceed 90 lbs.
   2. Power actuated fasteners may be used in steel where the service load on any individual fastener does not exceed 250 lbs.

E. Metal suspension systems shall be designed in accordance with ASTM E 580 Section 5.2.8.8 and the requirements of IBC Section 1615A.1.16, 13.5.6.2.1 and 13.5.6.2.2, or be designed in accordance with ASCE/SEI 7 Section 13.2.1.1, or be seismically qualified in accordance with ASCE/SEI 7 Sections 13.2.5 or 13.2.6.

F. Metal suspension systems in Seismic Design Categories D, E, and F shall be designed and installed in accordance with ASTM C 635, ASTM C 636, and ASTM E 580, Section 5 as modified by IBC Section 1615A.1.16, 13.5.6.2.2.
   1. Exit Ways: Ceiling assemblies in exit Ways of hospitals and essential services buildings shall be installed with a main runner or cross runner surrounding all sides of each piece of tile, board or panel and each light fixture or grille. A cross runner that supports another cross runner shall be considered as a main runner for the purpose of structural classification. Splices or intersections of such runners shall be attached with through connectors such as pop rivets, screws, pins, plates with end tabs or other approved connectors.

2. Corridors and Lobbies: Expansion joints shall be provided in the ceiling at intersections of corridors and at junctions of corridors and lobbies or other similar areas.
3. Panels: Panels weighing more than 1/2 pounds per square foot shall be positively attached to the ceiling suspension runners.
4. Lateral force bracing: Lateral force bracing is required for all ceiling areas except that they shall be permitted to be omitted in rooms with floor areas 144 square feet or less when perimeter support in accordance with ASTM E 580 Sections 5.2.2 and 5.2.3 are provided and perimeter walls are designed to carry the ceiling lateral forces.
5. Ceiling fixtures: Fixtures shall be mounted in a manner that will not compromise ceiling performance.
    a. All recessed or drop-in light fixtures and grilles shall be supported directly from the fixture housing to the structure above with a minimum of two 12 gage wires located at diagonally opposite corners. Leveling and positioning of fixtures may be provided by the ceiling grid. Fixture support wires may be slightly loose to allow the fixture to seat in the grid system. Fixtures shall not be supported from main runners or cross runners if the weight of the fixtures causes the total dead load to exceed the deflection capability of the ceiling suspension system.
    b. Fixtures shall not be installed so that the main runners or cross runners will be eccentrically loaded.
    c. Surface-mounted fixtures shall be attached to the main runner with at least two positive clamping devices made of material with a minimum of 14 gage. Rotational spring catches do not comply. A 12 gage suspension wire shall be attached to each clamping device and to the structure above.
6. Partitions: Where the suspended ceiling system is required to provide lateral support for the permanent or relocatable partitions, the connection of the partition to the ceiling system, the ceiling system members and their connections, and the lateral force bracing shall be designed to support the reaction force of the partition from prescribed loads applied perpendicular to the face of the partition. Partition connectors, the suspended ceiling system and the lateral-force bracing shall all be engineered to suit the individual partition application and shall be shown or defined in the drawings or specifications.

2.03 PERFORMANCE CRITERIA

A. Metal suspension systems shall be qualified by current Evaluation Report from ICC-ES under AC368.

B. Main runners shall be classified as heavy duty in accordance with ASTM C 635.

2.04 MATERIALS

A. Steel Sheet: ASTM A 1008, CS Type B

B. Galvanized Steel Sheet: ASTM A 653, CS Type B, not less than G30 coating designation

C. Other Steel: Attachment devices and accessories shall be types and grades of steel as standard with manufacturer, in accordance with ICC-ES Evaluation Reports.

2.05 FABRICATION

A. Main and cross runners shall be inverted T-shape, double web, roll formed from minimum 0.018-inch-thick cold-rolled steel sheet, prepainted, or from galvanized steel sheet.

B. Provide manufacturer's standard edge moldings that fit acoustical panel edge details and suspension systems indicated and that match width and configuration of exposed runners unless otherwise indicated.

1. For edge moldings less than 2 inches wide, provide seismic clips as qualified by ICC ES Reports; Armstrong BERC 2, Chicago 1496, USG Donn ACM7, or approved equal.

C. Provide profiles and colors as noted in plans.

2.06 ACCESSORIES

A. Hanger Wire: ASTM A 641, Class 1 zinc coating, soft temper, size(s) to comply with requirements of ASCE/SEI 7 Section 13.5.6, ASTM C 636, and ASTM E 580, as applicable, but not less than 0.106 inch

B. Anchors: Fabricated from corrosion-resistant materials with holes or loops for attaching wire hangers and capable of sustaining, without failure, a load equal to 5 times that imposed by construction as determined by testing according to ASTM E 488 by an independent testing agency.
   1. Type: Post installed, expansion anchor.

C. Power Actuated Fasteners: Suitable for application indicated, fabricated from corrosion-resistant materials with clips or other devices for attaching hangers of type indicated, and capable of sustaining, without failure, a load equal to 10 times that imposed by construction as determined by testing according to ASTM E 1190 by an independent testing agency
   1. Power actuated fasteners shall be qualified by a current Evaluation Report, from ICC-ES, under AC70.

D. Miscellaneous Accessories: Manufacturer's standard accessory items including, but not limited to, support angles, corner caps, access angles, and moldings required for complete installation

PART 3 - EXECUTION

3.01 EXAMINATION Examine areas and substrates, with Installer present, and including cast-in anchors and structural framing, for compliance with requirements and other conditions affecting performance of the Work.

B. Proceed with installation only after unsatisfactory conditions have been corrected.

3.02 INSTALLATION

A. Install in accordance with ASTM C 636, ASTM E 580 as modified by IBC, and manufacturer's instructions.

B. Install suspension system components in sizes and spacings indicated on Drawings, but not less than those required by referenced installation standards for assembly types and other assembly components indicated.

C. Isolate suspension systems from building structure where they abut or are penetrated by building structure to prevent transfer of loading imposed by structural movement.
   1. Suspend hangers from building structure as follows:
   2. Install hangers plumb and free from contact with insulation or other objects within ceiling plenum that are not part of supporting structural or suspension system.
   3. Splay hangers only where required to miss obstructions and offset resulting horizontal forces by bracing, counters playing, or other equally effective means.
      a. Where width of ducts and other construction within ceiling plenum produces hanger spacings that interfere with locations of hangers required to support standard suspension system members, install supplemental suspension members and hangers in the form of trapezes or equivalent devices.
   4. Size supplemental suspension members and hangers to support ceiling loads within performance limits established by referenced installation standards.

5. Wire Hangers: Secure by looping and wire tying, either directly to structures or to inserts, eye screws, or other devices and fasteners that are secure and appropriate for substrate, and in a manner that will not cause hangers to deteriorate or otherwise fail.
6. Do not attach hangers to steel roof deck.
7. Do not attach hangers to permanent metal forms. Furnish cast-in-place hanger inserts that extend through forms.
8. Do not attach hangers to rolled-in hanger tabs of composite steel floor deck.
9. Do not connect or suspend steel framing from ducts, pipes, or conduit.

D. Seismic Bracing:
1. Provide at a maximum of twelve (12) feet on center in both directions and a maximum of six (6) feet from each wall.
2. Provide four (4) No. 12-gauge wires secured to the main runner within two (2) inches of the cross runner intersection and splayed 90 degrees from each other at an angle not to exceed 45 degrees from the plane of the ceiling.
3. Provide a rigid strut fastened to the main runner at the location of the bracing wires, extended to and fastened to the structural members above.

E. Grid Suspension Systems: Attach perimeter wall track or angle where grid suspension systems meet vertical surfaces. Mechanically join main beam and cross-furring members to each other and butt-cut to fit into wall track.

F. Installation Tolerances: Install suspension systems that are level to within 1/8 inch in 12 feet measured lengthwise on each member and transversely between parallel members.

END OF SECTION

SECTION 09 9100 – PAINTING

PART 1 - GENERAL

1.01 THE REQUIREMENT

A. Provide all labor, materials, equipment, and services required to do all painting (excluding items otherwise listed in the applicable Sections of Division 09 – Finishes), including preparation, priming, and protection of finished surfaces. An extensive and comprehensive painting job will be required and shall include all surfaces which normally are painted.

B. The intent of these Specifications is to obtain the material and workmanship necessary to produce an adequate and acceptable job, and is intended to describe the requirements for both shop and field painting.

C. The intent of this Specification Section is to include all items which are to receive painting and have not been included otherwise in these Specifications.

D. The intent of this Specification shall be to paint all exposed structural steel, miscellaneous ferrous metal, lintels, equipment, piping, all exterior masonry walls, and all other work obviously required or noted to be painted unless otherwise specified (see Section 2.01). The omission of minor items in the schedule of work shall not relieve the obligation to include such items where they come within the general intent of the Specifications as stated herein. All interior surfaces and equipment which have been previously painted shall be repainted or recoated following the proper surface preparation as shown on the Drawings.

E. Review and examine all Divisions and Sections of these Specifications for any additional painting requirements and/or additional surfaces or items to be painted.

F. Apply specified finish coats of paint to all pre-primed work and complete finishing system for unprimed work required to be painted.

G. Backprime, with specified interior first coat material all surfaces of finish trim which will be concealed after installation.

H. Apply specified finish coats of paint to all prepainted surfaces which require only a finish coat. Otherwise, the complete system (as given in Section 2.01) shall be administered.

1.02 RELATED WORK

A. Wherever detailed painting requirements are covered under an equipment or product Specification, the Specifications herein other Sections, govern with respect to surface preparation, paint materials, coats, thicknesses, and coverage.

1.03 ITEMS NOT REQUIRING FIELD PAINTING

A. All new galvanized and stainless steel surfaces (except where noted on Drawings).

B. Valves, fittings, and appurtenances in small diameter plastic piping (less than 3 inches).

C. Prefinished items.

D. Plain copper (except as required for color coding) and stainless steel.

E. Aluminum except where otherwise designated and required to prevent corrosion at contact with dissimilar materials.

F. Concrete floors except where noted.

G. Exterior concrete surfaces except where noted.

H. Finish hardware.

I. Concealed from view items (except where required for color coding) and surfaces, except as specified herein or where previously painted.

J. Packing glands and other adjustable parts and nameplates of mechanical equipment.

K. Mechanical equipment (i.e. pumps, blowers, actuators, etc.)

1.04 DEFINITIONS

A. The term “paint” as used herein includes enamels, epoxy, paints, sealers, fillers, emulsions, and other coatings.

B. MDMTPC = Minimum dry mil thickness per coat.

C. MDFT = Minimum dry film thickness.

D. SSPC = Steel Structures Painting Council.

1.05 QUALITY ASSURANCE

A. Qualification of Painters: All painting shall be done by qualified, skilled, experienced craftsmen. In the acceptance or rejection of completed painting, no allowance will be made for lack of skills on the part of the craftsmen.

B. Paint Labels: Labels on paint containers shall include the following:
   1. Manufacturer's name
   2. Generic type of paint
   3. Manufacturer's stock number
   4. Color
   5. Instructions for thinning where applicable

C. Field Quality Control: Paint film thickness shall be subject to measurement by electrometer, wet film gauge, low or high voltage meter, and/or ENGINEER approved measuring instruments. If dry film thickness is found to be less than specified, or coverage is not uniform, apply additional paint to correct the thickness or appearance at no additional cost to the OWNER.

D. Compatibility:
   1. Compatibility of all paints used is required. A compatible paint will be considered a paint which precludes adverse effects related to bonding, drying delamination, scaling, lifting, and bleeding.
   2. In cases where shop-applied primers and coatings on materials and equipment furnished by suppliers are products different from those described in the Specifications, compatibility shall be verified with the specified field-applied coating system.
   3. Where thinning is necessary, only the products of the manufacturer furnishing the paint, and products for thinning purposes only, will be allowed.

E. Thickness and Spreading Rates:
   1. Minimum dry mil thicknesses per coat (MDMTPC) and/or spreading rates in square feet per gallon shall be governed by the manufacturer's current data sheets or literature containing recommendations or instructions regarding these values. These recommended dry mil thickness and/or spreading rate values will be considered requirements to be met same as if set out herein these Specifications and Contract Documents. Do not exceed manufacturer's recommended coverage rates.
   2. The number of coats to be applied are specified herein and shall govern. Where the total dry film thickness is specified, this thickness shall govern over the MDMTPC.

1.06 PRODUCT DELIVERY, HANDLING AND STORAGE

A. Delivery: All materials shall be brought to the project site in the original sealed and labeled containers of the paint manufacturer. All labels shall be legible and intact at time of use.

B. Manufacturer's Instructions: Paint manufacturer's written instructions for proper surface preparation, mixing, thinning, application and drying shall be furnished with the paint, and strictly followed.

C. Storage of Materials:
   1. Store only acceptable materials on project site.
   2. Store only in a suitable and designated area restricted to the storage of paint materials and related equipment.
   3. Comply with all applicable health and fire regulations regarding the storage of paint materials.
   4. Storage of material shall comply with the manufacturer's specifications; however, storage shall be at a minimum temperature of 50°F.

D. Protection of Materials:
   1. Take all necessary precautions to ensure the safe storage and use of paint materials and the prompt and safe disposal of waste.
   2. Painting wastes shall be properly deposited in containers made for this purpose. Do not use plumbing fixtures for disposing of paints wastes.
   3. Take all necessary precautions to protect paint materials before, during and after application and to protect the finished work.

E. Replacement: In the event of damage to paint materials, immediately make all replacements necessary at no additional cost.

F. Product delivery, handling and storage shall be in accordance with Part 1 of this Specification.

1.07 JOB CONDITIONS

A. Environmental Requirements:
   1. Comply with manufacturer's recommendations as to the environmental conditions under which painting systems can be applied.
   2. Do not apply finish in areas where dust and/or mist is being generated.

B. Climatic Conditions: Paint shall not be applied if:
   1. The ambient temperature or temperature of the surface to be painted is below 50°F or below the temperature recommended by the paint manufacturer.
   2. The relative humidity is above 85 percent.
   3. The relative humidity is such that the paint will not dry properly in accordance with the manufacturer's instructions.

C. Projection:
   1. Protect with drop cloths, masking or other acceptable means all surfaces which could be damaged in function or appearance by paint, including surfaces not being painted concurrently and surfaces not to be painted.
   2. Hardware, accessories, fixtures, and similar items shall be removed and replaced after completion of painting.
   3. Spray painting will not be permitted when it will cause damage to adjacent of otherwise located surfaces.
   4. All paint splatters on glass shall be wiped off immediately.

PART 2 - PRODUCTS

2.01 PAINT SYSTEMS

A. General:
   1. All paints of a system shall be by one (1) manufacturer.
   2. "Lift" tests may be requested on various surfaces to be painted to assure bonding compatibility.
   3. Paints containing lead, or other "dangerous" materials, that surpass federal maximum levels shall not be allowed. Oil shall be pure boiled linseed oil.

2.02 COLORS

A. The manufacturer shall be able to furnish all paints for exposed surfaces in a wide range of colors including lighter and darker shades of these colors which may be selected on various surfaces, if not included in the following codes (also note, the below listed may be included in the requirements of the applicable Sections of Division 09 – Finishes):
   1. Safety Color Codes: Comply with Occupational Safety and Health Administration Standards, as applicable, regarding safety color codes.
   2. Piping Color Codes: Colors for process pipe coding shall be in accordance with these Specifications.

PART 3 - EXECUTION

3.01 INSPECTION

A. Examine surfaces scheduled to receive paint and/or coating finishes for conditions that will adversely affect application, permanence, or quality of work and which cannot be put into an acceptable condition through surface preparation.

B. Do not proceed with surface preparation or painting application until conditions are suitable.

C. If surfaces are not thoroughly dry or if they cannot be put in proper conditions to receive paint by customary cleaning methods, the painting applicators shall notify the ENGINEER in writing, requesting necessary corrections.

D. Review the specified or approved painting systems and bring any questions or doubts as to the proper performance to the ENGINEER. Otherwise, assume the responsibility for providing the desired results.

3.02 ACCEPTANCE OF SURFACES

A. The commencement of painting work in any area or space will be construed as acceptance of the surface as being satisfactory.

3.03 SURFACE PREPARATION

A. General:
   1. All surfaces shall be thoroughly cleaned and free of dust, rust, mill scale, loose paint, or oily materials.
   2. References to SSPC refer to Steel Structures Painting Council specifications.
   3. Surfaces shall be primed and/or treated, as specified, as soon after completion of surface preparation as practical, but in any event before any visible or detrimental corrosion or contamination can occur. A prepared surface, which becomes corroded or contaminated, shall be re-prepared before treating and/or priming.

B. Non-submerged Non-Galvanized Structural Steel: All new non-galvanized structural steel for non-submerged service shall have their surfaces prepared according to SSPC-SP6-63, Commercial Blast Cleaning.

C. Submerged Non-Galvanized Structural Steel: All new non-galvanized structural steel and fabricated metals for submerged service of high temperature service shall have their surfaces prepared according to SSPC-SP10-63T Near White Metal Blast Cleaning.

D. Unprimed Metal Surfaces: All unprimed metal surfaces and miscellaneous fabricated metals (exclusive of structural steel and galvanized metal) to be painted shall be thoroughly cleaned according to SSPC-SP2-63 Hand Tool Cleaning or SSPC-SP3-63 Power Tool Cleaning, unless specifically required elsewhere in these Specifications.

E. Non-Ferrous Metals: Non-ferrous metals surface preparation shall be not less than that required by the paint manufacturer.

F. Concrete and Masonry:
   1. All concrete and masonry surfaces shall be cleaned and free from loose particles.
   2. Concrete floors to be painted shall be etched with a 10 percent solution of muriatic acid. If the concrete surface is exceedingly dense, a greater strength acid or a second etching will be required. After etching for a minimum of 30 minutes, wash thoroughly with water to remove all traces of acid. Allow to thoroughly dry at least 72 hours.
   3. Submerged concrete to be coated shall have their surfaces prepared by a light sandblast (Brush Blast), to remove loose coating and provide a textured surface to enhance adherence of the new coating. No sandblasting shall be done on the job in areas containing pumps, motors or other equipment that could be damaged by infiltration of sand particles.

G. Wood Surfaces: Wood surfaces shall be thoroughly cleaned of all extraneous matter and all cracks, nail holes, and other defects properly filled and smoothed. Wood trim shall be sanded to fine finish and wiped clean of dust.

3.04 SHOP PRIMING

A. Shop priming shall be done with primers that are guaranteed by the equipment manufacturer to be compatible with the finish paints to be used.

B. The CONTRACTOR shall coordinate all paint materials supplied in the shop and field.

3.05 APPLICATION

A. On metal surfaces apply each coat of paint at the rate specified by the manufacturer to achieve the minimum dry mill thickness required. One gallon of paint as originally furnished by the manufacturer shall not cover a greater area when applied by spray gun than when applied un-thinned by brush. Deficiencies of film thickness shall be corrected.

B. On masonry, the application rates will vary according to surface texture; however, in no case shall the manufacturer's stated coverage rate be exceeded.

C. On porous surfaces, it shall be the painter's responsibility to achieve a protective and decorative finish either by decreasing the coverage rate of by applying additional coats of paint.

D. Evenly brush out each finish coat and permit to dry per manufacturer's recommendation before applying any subsequent coats.

E. All paints and catalogs shall be maintained at a minimum manufacturer's application temperature before applying.

F. Successive coats of paint shall be tinted so as to make each coat easily distinguishable from each other with the final undercoat tinted to a darker shade than the finish coat.

G. Finish surfaces shall not show brush marks or other irregularities. Undercoats shall be thoroughly and uniformly sanded with No. 00 sandpaper or equal to remove defects and provide a smooth even surface.

H. Painting shall be continuous and shall be accomplished in an orderly manner so as to facilitate inspection. Materials subject to weathering shall be prime coated as quickly as possible. Surfaces of exposed members that will be inaccessible after erection shall be cleaned and painted before erection.

I. All surfaces to be painted as well as the atmosphere in which painting is to be done shall be maintained at the conditions recommended by manufacturer by heating and ventilating, if necessary, until each coat of paint has hardened. Any defective paint shall be removed and the surface repainted.

J. Perform all required back priming work before items are installed.

3.06 REINSTALLATION OF REMOVED ITEMS

A. Following completion of painting in each space, promptly reinstall all items removed for painting, using only workmen skilled in the particular trade.

3.07 CLEANING

A. During the progress of Work, do not allow the accumulation of empty containers or other excess items except in areas specifically reserved for that purpose.

B. Take all precautions to prevent accidental spillage of paint materials. In the event of spilling, immediately remove all spilled materials and the waste and other equipment used to clean up the spill, and wash surfaces to their original undamaged condition.

C. Touch-up and restore finish where damaged.

D. Remove all trash and accumulated materials of a painting nature from premises at the completion of the Work.

E. Paint spots, oil or stains upon adjacent surfaces shall be removed. Any damage to Work of other trades or equipment caused from painting shall be made good at no additional expense.

F. Do not mark surface finish of items being cleaned.

G. Leave entire job clean (including paint storage space).

3.08 FINAL INSPECTION

A. Protect all painted surfaces against damage until the date of final acceptance of the Work.

B. Conduct a final inspection of all painting work and repaint or retouch any areas or surfaces found deficient in complying with these Specifications.

END OF SECTION

SECTION 09 9700 – SPECIAL COATINGS

PART 1 - GENERAL

1.01 THE REQUIREMENT

A. Provide all labor, materials, equipment, and services required for accomplishing special coatings on equipment, tanks, or piping in accordance with these Specifications and Contract Documents.

1.02 SPECIAL NOTICE

A. Because there exists in this project corrosive agents in the liquids and, in certain areas, in the atmosphere, special coatings for protecting the select equipment, structures, and appurtenances are required. The service requirements of the coatings are harsh and only products with an extended history of successful application will be acceptable.

B. Wherever detailed coating/painting requirements are covered under an equipment or product specification, the Specifications herein, shall govern over those coating requirements, with respect to surface preparation, coat materials, coats, thickness, and coverage with the exception of manufacturer's supplied coatings and protection. Determine if the manufacturer's supplied coatings are adequate.

1.03 ACCEPTABLE PRODUCTS

A. Specified products are specified as the standard of quality. Products are listed to establish a minimum standard of quality. Equivalent materials of other manufacturers may be submitted on written approval of the ENGINEER. As part of the proof of quality and performance equivalency, the ENGINEER will require at the cost of the CONTRACTOR, certified test reports from a nationally known, reputable, and independent testing laboratory conducting comparative tests as directed by the ENGINEER between the product specified and the requested substitution.

B. Requests for substitution shall include manufacturer's literature for each product giving name, product number, and generic type, descriptive information, solids by volume, recommended dry film thickness and certified lab test reports showing results to equal the performance criteria of the products specified herein. All materials must meet all local, state, and Federal regulations including and not limited to the Air Quality Management District. In addition, a list of five projects shall be submitted in which each product has been used and rendered satisfactory service.

1.04 ITEMS REQUIRING SPECIAL COATING

A. See Coating Schedules as listed in PART 2 – PRODUCTS.

1.05 ITEMS NOT REQUIRING SPECIAL COATING

A. The metal surfaces of stainless steel, chromium plate, galvanized and aluminum that are not now coated will not require field coating. Do not apply coating over any code-required labels, glass items, gauges, and name plates. It is also important not to coat any moving parts or operating units, valves or stems, or any mechanical and electrical parts such as valve and damper operators, linkages. It is the contactor's responsibility to protect any surface that is not to receive a coating.

1.06 QUALITY ASSURANCE

A. Qualification of Coaters: Qualification of Coaters: All coating shall be done by qualified, skilled, and experienced craftsmen. In the acceptance or rejection of completed coating, no allowance will be made for lack of skills on the part of the craftsmen.
   1. SSPC-QP-1 Certified - Field Application to Complex Industrial and Marine Structures

2. SSPC-QP-3 Certified - Shop Painting Certification

B. Coating Labels: Labels on coating containers shall include the following:
   1. Manufacturer's name
   2. Generic type of coat
   3. Manufacturer's stock number
   4. Color
   5. Instructions for thinning where applicable

C. Field Quality Control: Coating film thickness shall be subject to measurement with electrometer, wet film gauge, low or high voltage meter and/or applicable measuring instruments acceptable to the ENGINEER. If dry film thickness is found to be less than specified, or coverage is not uniform, an additional coating to correct thickness or appearance at no additional cost shall be applied.

D. Compatibility:
   1. Compatibility of all coatings used shall be required. A compatible coating will be considered a coat, which precludes adverse effects related to bonding, drying delamination, scaling, lifting, and bleeding.
   2. In cases where shop-applied primers and coatings on materials and equipment furnished by suppliers are products different from those described in the Specifications, compatibility with the specified field-applied coating system shall be verified by the CONTRACTOR.
   3. Where thinning is necessary, only the products of the manufacturer furnishing the coating, and products for thinning purposes only, will be allowed.

E. Thickness and Spreading Rates:
   1. Minimum dry mil thickness per coat (MDMTPC) and/or spreading rates in square feet per gallon shall be governed by the manufacturer's current data sheets or literature containing recommendations or instructions regarding these values. These recommended dry mil thickness and/or spreading rate values will be considered requirements to be met same as if set out herein; these Do Not exceed manufacturer's recommended coverage rates.
   2. The number of coats to be applied are specified herein and shall govern. Where the total dry film thickness is specified, this thickness shall govern over the MDMTPC.

1.07 PRODUCT DELIVERY, HANDLING AND STORAGE

A. Delivery: All materials shall be brought to the job site in the original sealed and labeled containers of the coating manufacturer. All labels shall be legible and intact at time of use.

B. Manufacturer's Instruction: Coating manufacturer's written instructions for proper surface preparation, mixing, thinning, application and drying shall be furnished with the coating and strictly followed.

C. Storage of Materials:
   1. Store only acceptable materials on project site.
   2. Store only in a suitable and designated area restricted to the storage of coating materials and related equipment.
   3. Comply with all applicable health and fire regulations regarding the storage of coating materials.
   4. Storage of material shall comply with the manufacturer's specifications; however, storage shall be at a minimum temperature of 50°F.

D. Protection of Materials:
   1. Take all necessary precautions to ensure the safe storage and use of coating materials and the prompt and safe disposal of waste.
   2. Coating wastes shall be properly deposited in containers made for this purpose.
   3. Take all necessary precautions to protect coating materials before, during and after application and to protect the finished work.

E. Replacement: In the event of damage to coating materials, immediately make all replacements necessary to the approval of the ENGINEER and at no additional cost.

F. Product delivery, handling and storage shall be in accordance with Part 1 of this Section and the manufacturer's recommendations.

1.08 JOB CONDITIONS

A. Environmental Requirements:
   1. Comply with manufacturer's recommendations as to environmental conditions under which coatings and coating systems can be applied.
   2. Do not apply finish in areas where dust and/or mist is being generated.

B. Climatic Conditions: Coating shall not be applied if:
   1. The ambient temperature or temperature of the surface to be coated is below 50°F or below the temperature recommended by the coating manufacturer.
   2. The relative humidity is above 85 percent.
   3. The relative humidity is such that the coating will not dry properly in accordance with the manufacturer's instructions.

C. Protection:
   1. Protect with drop cloths, masking or other acceptable means all surfaces which could be damaged in function or appearance by coating, including surfaces not being coated concurrently and surfaces not to be coated.
   2. Hardware, accessories, fixtures, and similar items shall be removed and replaced after completion of coating.
   3. Spray coating will not be permitted when it will cause damage to adjacent or otherwise located surfaces.
   4. All coating splatters on glass shall be wiped off immediately.

PART 2 - PRODUCTS

2.01 COATING SYSTEMS FOR STEEL - STRUCTURAL, TANKS, ROOF DECKING, PIPE, AND EQUIPMENT

A. Exterior Exposed:
   1. System Type: Aromatic Urethane Zinc-rich Primer/Epoxy/Polyurethane.
   2. Surface Preparation: SSPC-SP 6.
   3. Primer:
      a. Sherwin Williams Corothane Galvapac 2K @ 3.0 – 5.0 mils DFT 2K 100 for Low VOC
      b. Tnemec Series 90-97 Tneme Zinc @ 2.5-3.5 0 mils DFT. 94 H2O for Low VOC
   4. Intermediate Coat:
      a. Sherwin Williams Macropoxy 646; 4.0 – 8.0 mils DFT. 100 for Low VOC
      b. Tnemec Series N69 Hi-Build Epoxoline II; 4.0 to 6.0 mils DFT. L69 for Low VOC
   5. Finish Coat:
      a. Sherwin Williams Hi Solids Polyurethane @ 3.0 – 5.0 mils DFT. 250 or 100 for Low VOC

b. Series 1075 Endura-Shield II; 2.5 to 3.5 mils DFT. 1095 for Low VOC

6. Total DFT: 9.5 to 14.5 mils.

B. Interior Exposed:
1. System Type: Epoxy.
2. Surface Preparation: SSPC-SP 6.
3. Primer:
   a. Sherwin Williams Macropoxy 646; 4 – 8 mils DFT. M646 100 for Low VOC
   b. Tnemec Series N69 Hi-Build Epoxoline II; 3.0 to 5.0 mils DFT. L69 for Low VOC
4. Finish Coat:
   a. Sherwin Williams Macropoxy 646; 4 – 8 mils DFT. M646 100 for Low VOC
   b. Tnemec Series N69 Hi-Build Epoxoline II; 4.0 to 6.0 mils DFT. L69 for Low VOC
5. Total DFT: 7.0 to 11.0 mils.

C. Immersion, Potable Water:
1. System Type: Epoxy.
2. Surface Preparation: SSPC-SP 10.
3. Primer:
   a. Sherwin Williams Macropoxy 5500; 4.0 – 8.0 mils DFT.
   b. Tnemec Series N140 Pota Pox Plus; 4.0 to 6.0 mils DFT. L140 for Low VOC
4. Intermediate Coat:
   a. Sherwin Williams Macropoxy 5500; 4.0 – 8.0 mils DFT
   b. Tnemec Series N140 Pota Pox Plus; 4.0 to 6.0 mils DFT. L140 for Low VOC
5. Finish Coat:
   a. Sherwin Williams Macropoxy 5500; 4.0 – 8.0 mils DFT
   b. Tnemec Series N140 Pota Pox Plus; 4.0 to 6.0 mils DFT. L140 for Low VOC
6. Total DFT: 12.0 to 18.0 mils.

Or

1. System Type: Ultra High Solids Epoxy.
2. Surface Preparation: Abrasive blast clean per SSPC-SP10, 2.5 – 4 mil profile
3. Primer:
   a. For stripe coat application to all welds and irregular surfaces.
   b. Sherwin Williams Macropoxy 5500; 4.0 – 6.0 mils DFT
   c. Tnemec Series N140 Pota Pox Plus; 4.0 to 6.0 mils DFT. L140 for Low VOC
4. Finish Coat:
   a. For finish coat application over all surfaces.
   b. Sherwin Williams Sherplate PW or Duraplate UHS; 20.0 – 30.0 mils DFT
   c. Tnemec Series 20 or 22; 20.0 - 30.0 mils DFT.
5. Total DFT: 20.0 to 30.0 mils

D. Interior/Immersion, Severe Exposure to H2S:
1. System Type: Modified Epoxy.
2. Surface Preparation: White Metal Blast SSPC-SP 5 with minimum 3.0-mil profile.
3. Primer/Finish (One or More Coats):
   a. Sherwin Williams Duraplate 6100 or Novaplate 325; 30.0 – 40.0 mils DFT
   b. Tnemec Series 435 Perma-Glaze; 30.0 to 36.0 mils DFT.
4. Total DFT: 30.0 to 36.0 mils.

E. Marginally Prepared Surfaces (Maintenance, Non-Immersion, Interior):
1. System Type: Mastic epoxy, solvent or water based.
2. Surface Preparation: In accordance with manufacturer's instructions.

3. Primer:
    a. Sherwin Williams Macropoxy 646; 4 – 8 mils DFT. M646 100 for Low VOC
    b. Tnemec Series 27 WB Typoxy 4.0 to 6.0 mils DFT.
4. Finish Coat:
    a. Sherwin Williams Macropoxy 646; 4 – 8 mils DFT. M646 100 for Low VOC
    b. Tnemec Series 27 WB Typoxy 4.0 to 6.0 mils DFT.
5. Total DFT: 8.0 to 12.0 mils.

F. Marginally Prepared Surfaces (Maintenance, Non-Immersion, Exterior):
1. System Type: Mastic Epoxy/Polyurethane.
2. Surface Preparation: In accordance with manufacturer's instructions.
3. Primer:
    a. Sherwin Williams Macropoxy 646; 4 – 8 mils DFT. M646 100 for Low VOC
    b. Tnemec Series 27 WB Typoxy 4.0 to 6.0 mils DFT.
4. Finish Coat (Exterior):
    a. Sherwin Williams Hi Solids Polyurethane; 3.0 – 5.0 mils DFT; 250 or 100 for Low VOC
    b. Series 1075 Endura-Shield II; 2.5 to 3.5 mils. DFT 1095 for Low VOC
5. Total DFT: 6.5 to 9.5 mils.

G. Below Ground Pipe (Heat Resistant to 375 F and Corrosion Resistant):
1. System Type: Moisture Cure Urethane Zinc Rich Primer/Inorganic Hybrid water borne Epoxy
2. Surface Preparation: Near White Metal Blast SSPC-SP-10 with an angular anchor profile of 1-2 mils.
3. Primer:
    a. Sherwin Williams Corothane Galvapac 2K; 3.0 – 5.0 mils DFT. 100 for low VOC.
    b. Tnemec Series 90E-92 Tneme Zinc; 2.5 to 3.5 mils DFT.
4. Intermediate Coat:
    a. Sherwin Williams N/A
    b. Tnemec Series 1224 Epoxoline WB @ 4.0 – 8.0 mils DFT
5. Finish Coat:
    a. Sherwin Williams Sherglass FF; 8.0 - 16.0 mils DFT.
    b. Series 1224 Epoxoline WB; 4.0 – 8.0 mils DFT
6. Total DFT: 10.5 to 19.5 mils.

Or

1. System Type: Reinforced Novolac Epoxy
2. Surface Preparation: Near White Metal Blast SSPC-SP-10 with an angular anchor profile of 1-2 mils.
3. Primer:
    a. Sherwin Williams Epo Phen HT Coating; 7.0 - 9.0 mils DFT.
4. Finish Coat:
    b. Sherwin Williams Epo Phen HT Coating; 7.0 - 9.0 mils. DFT
5. Total DFT: 14.0 to 18.0 mils.

2.02 COATING SYSTEMS FOR FACTORY PRIMED STEEL - DOORS, FRAMES, AND MISCELLANEOUS EQUIPMENT

A. Interior Exposed:
   1. System Type: Acrylic
   2. Surface Preparation: Clean and dry
   3. Primer: Factory primed
   4. Field Primer:
      a. Sherwin Williams ProCryl Universal Primer; 2.0 - 4.0 mils DFT
      b. Tnemec Series 115 Uni Bond DF; 2.0 to 3.0 mils DFT.
   5. Finish Coat:
      a. Sherwin Williams Shercryl HPA; 2.0 – 4.0 mils DFT. Pro Industrial Acrylic for low VOC.
      b. Tnemec Series 1029 Enduratone; 2.0 - 3.0 mils. DFT
   6. Total DFT: 4.0 to 6.0 mils (on top of shop primer).

B. Exterior Exposed:
   1. System Type: Inorganic Hybrid Water Based Epoxy/Polyurethane
   2. Surface Preparation: Clean and dry.
   3. Primer: Factory primed.
   4. Field Primer:
      a. Sherwin Williams Pro Industrial WB Cat Epoxy B73; 3.0 – 5.0 mils DFT
      b. Tnemec Series 27 Typoxy WB; 3.0 - 5.0 mils DFT.
   5. Finish Coat:
      a. Sherwin Williams Pro Industrial WB Acrolon 100 B65; 2.0 – 4.0 mils DFT.
      b. Tnemec Series 1075 Endura-Shield II; 2.5 - 3.5 mils. DFT 1095 for Low VOC
   6. Total DFT: 5.5 to 8.5 mils (on top of shop primer).

2.03 COATING SYSTEMS FOR GALVANIZED STEEL AND NONFERROUS METAL - PIPE AND MISCELLANEOUS FABRICATIONS

A. Interior Exposure:
   1. System Type: Acrylic
   2. Surface Preparation: In accordance with manufacturer’s instructions and ASTM D6386
   3. Primer:
      a. Sherwin Williams ProCryl Primer; 2.0 – 3.0 mils DFT
      b. Tnemec Series 115 Uni Bond DF; 2.0 - 3.0 mils DFT
   4. Finish Coat:
      a. Sherwin Williams Shercryl HPA; 2.0 – 4.0 mils DFT. Pro Industrial Acrylic for low VOC.
      b. Tnemec Series 1029 Enduratone; 2 .0 - 3 .0 mils DFT.
   5. Total DFT: 4 .0 to 6 .0 mils.

B. Exterior Exposure:
   1. System Type: Acrylic
   2. Surface Preparation: In accordance with manufacturer’s instructions and ASTM D6386
   3. Primer:
      a. Sherwin Williams ProCryl Primer; 2.0 – 3.0 mils DFT
      b. Tnemec Series 115 Uni Bond DF; 2 .0 to 3 .0 mils DFT.

4. Finish Coat:
    a. Sherwin Williams Shercryl HPA; 2.0 – 4.0 mils DFT. Pro Industrial Acrylic for low VOC.
    b. Tnemec Series 1029 Enduratone; 2.0 to 3.0 mils. DFT
5. Total DFT: 4.0 to 6.0 mils

2.04 COATING SYSTEMS FOR DUCTILE OR CAST IRON - PIPE, PUMPS, AND VALVES

A. Interior Exposure:
1. System Type: Epoxy
2. Surface Preparation: In accordance with manufacturer's instructions
3. Primer:
    a. Sherwin Williams Macropoxy 646; 4 – 8 mils DFT. M646 100 for Low VOC
    b. Series N69 Hi-Build Epoxoline II; 4.0 to 6.0 mils DFT. L69 for Low VOC
4. Finish Coat:
    a. Sherwin Williams Macropoxy 646; 4 – 8 mils DFT. M646 100 for Low VOC
    b. Series N69 Hi-Build Epoxoline II; 4.0 - 6.0 mils DFT. L69 for Low VOC
5. Total DFT: 8.0 to 12.0 mils.

B. Exterior Exposure:
1. System Type: Epoxy/Polyurethane.
2. Surface Preparation: In accordance with manufacturer's instructions.
3. Primer:
    a. Sherwin Williams Macropoxy 646; 4 – 8 mils DFT. M646 100 for Low VOC
    b. Tnemec Series N69 Hi-Build Epoxoline II; 4.0 - 6.0 mils DFT. L69 for Low VOC
4. Finish Coat:
    a. Sherwin Williams Hi Solids Polyurethane; 3.0 – 5.0 mils DFT. 250 or 100 for low VOC.
    b. Series 1075 Endura-Shield II; 2.5 - 3.5 mils DFT. 1095 for Low VOC
5. Total DFT: 6.5 to 9.5 mils

C. Below Ground:
1. System Type: Coal tar epoxy.
2. Surface Preparation: In accordance with manufacturer's instructions.
3. Prime/Finish Coat:
    a. Sherwin Williams Targuard Coal Tar Epoxy; 16 – 32 mils DFT. 100 for low VOC.
    b. Series 46H-413 Hi-Build Tneme-Tar; 14.0 - 20.0 mils DFT. Series 27 WB Typoxy for Low VOC.
4. Total DFT: 14.0 to 20.0 mils

D. Immersion, Potable Water:
1. System Type: Epoxy.
2. Surface Preparation: In accordance with manufacturer's instructions.
3. Primer:
    a. Sherwin Williams Macropoxy 5500; 4.0 – 6.0 mils DFT
    b. Series N140 Pota Pox Plus; 4.0 to 6.0 mils DFT. L140 for Low VOC
4. Intermediate Coat:
    a. Sherwin Williams Macropoxy 5500; 4.0 – 6.0 mils DFT
    b. Series N140 Pota Pox Plus; 4.0 - 6.0 mils DFT. L140 for Low VOC.
5. Finish Coat:
    a. Sherwin Williams Macropoxy 5500; 4.0 – 6.0 mils DFT
    b. N69 Hi-Build Epoxoline II; 4.0 - 6.0 mils DFT. L140 for Low VOC

6. Total DFT: 12.0 to 18.0 mils

Or

1. System Type: Ultra High Solids Epoxy.
2. Surface Preparation: Abrasive blast clean per SSPC-SP10, 2.5 – 4 mil profile
3. Primer:
   a. For stripe coat application to all welds and irregular surfaces.
   b. Sherwin Williams Macropoxy 5500; 4.0 – 6.0 mils DFT
   c. Tnemec Series N140 Pota Pox Plus; 4.0 to 6.0 mils DFT. L140 for Low VOC
4. Finish Coat:
   a. For finish coat application over all surfaces.
   b. Sherwin Williams Sherplate PW or Duraplate UHS; 20.0 – 30.0 mils DFT
   c. Tnemec Series 20 or 22; 20.0 - 30.0 mils DFT.
5. Total DFT: 20.0 to 30.0 mils

E. Immersion, Severe Exposure to H2S:
1. System type: Modified Polyamine Ceramic Epoxy
2. Surface preparation: In accordance with manufacturer's recommendation.
3. Primer/Finish (One or more coats):
   a. Sherwin Williams Duraplate 6100 or Novaplate 325; 30 – 40 mils DFT
   b. Tnemec Series 431 Perma Glaze; 30-40 mils DFT
4. Total DFT: 30-40 mils.

2.05 COATING SYSTEMS FOR PVC

A. Interior Exposure:
1. System Type: Epoxy.
2. Surface Preparation: Scarify
3. Primer:
   a. Sherwin Williams Macropoxy 646; 4.0 – 8.0 mils DFT. M646 100 for Low VOC
   b. Series N69 Hi-Build Epoxoline II; 4.0 to 6.0 mils DFT. L69 for Low VOC
4. Finish Coat:
   a. Sherwin Williams Macropoxy 646; 4.0 – 8.0 mils DFT. M646 100 for Low VOC
   b. Tnemec Series N69 Hi-Build Epoxoline II; 4.0 to 6.0 mils DFT. L69 for Low VOC
5. Total DFT: 8.0 to 12.0 mils.

B. Exterior Exposure:
1. System Type: Epoxy/Polyurethane.
2. Surface Preparation: Scarify.
3. Primer:
   a. Sherwin Williams Macropoxy 646; 4.0 – 8.0 mils DFT. M646 100 for Low VOC
   b. Series N69 Hi-Build Epoxoline II; 4.0 - 6.0 mils DFT. L69 for Low VOC
4. Finish Coat:
   a. Sherwin Williams Hi Solids Polyurethane; 3.0 – 5.0 mils DFT. 250 or 100 for low VOC.
   b. Series 1075 Endura-Shield II; 2.5 to 3.5 mils. DFT. 1095 for Low VOC
5. Coating provided shall contain UV inhibitor.

2.06 COATING SYSTEMS FOR PRECAST CONCRETE AND CAST-IN-PLACE CONCRETE (REQUIRE WHERE INDICATED IN PLANS)

A. Exterior Exposed:
   1. System Type: Acrylic
   2. Surface Preparation: SSPC-SP 13/NACE 6. Clean and dry
   3. Primer:
      a. Sherwin Williams Loxon XP; 4.0 – 8.0 mils DFT
      b. Tnemec Series 180 W.B. Tneme-Crete; 4.0 to 8.0 mils DFT.
   4. Finish Coat:
      a. Sherwin Williams Loxon XP; 4.0 – 8.0 mils DFT
      b. Tnemec Series 180 W.B. Tneme-Crete; 4.0 to 8.0 mils DFT.
   5. Total DFT: 8.0 to 16.0 mils.

B. Below Grade:
   1. System Type: Coal tar
   2. Surface Preparation: SSPC-SP 13/NACE 6. Clean and dry
   3. Primer:
      a. Sherwin Williams Targuard Coal Tar Epoxy; 8.0 – 16.0 mils DFT. 100 for low VOC
      b. Series 46-465 H.B. Tnemecol. DFT 8.0 to 12.0 mils.
   4. Finish Coat:
      a. Sherwin Williams Targuard Coal Tar Epoxy; 8.0 – 16.0 mils DFT. 100 for low VOC
      b. Tnemec Series 46-465 H.B. Tnemecol. DFT 8.0 to 12.0 mils.
   5. Total DFT: 16.0 to 24.0 mils.

C. Interior Exposed:
   1. System Type: Epoxy
   2. Surface Preparation: SSPC-SP 13/NACE 6. Abrasive Blast Cleaning
   3. Patching:
      a. Sherwin Williams Duraplate 2300 (as needed)
      b. Series 218 MortarClad (as needed)
   4. Primer:
      a. Sherwin Williams Macropoxy 646; 4.0 – 8.0 mils DFT. M646 100 for Low VOC
      b. Tnemec Series N69 Hi-Build Epoxoline II; 4.0 to 6.0 mils DFT. L69 for Low VOC
   5. Finish Coat:
      a. Sherwin Williams Macropoxy 646; 4.0 – 8.0 mils DFT. M646 100 for Low VOC
      b. Tnemec Series N69 Hi-Build Epoxoline II; 4.0 to 6.0 mils DFT. L69 for Low VOC
   6. Total DFT: 8.0 to 12.0 mils.

D. Severe Service – Immersion, H2S Exposure or Chemical Corrosion Protection (Light to Heavy Abrasion):
   1. System I (H2S less than 50 ppm, Light Abrasion)
      a. System Type: Modified Epoxy.
      b. Surface Preparation: SSPC-SP 13/NACE 6. Abrasive blast clean to ICRI 310.2, CSP 4 – 6. Surfacing and Patching:
         1) Sherwin Williams Duraplate 2300; 1/16 inch DFT
         2) Tnemec Series 218 MortarClad; 1/16 inch DFT (nominal 62.5 mils)

c. Primer/Finish (One or More Coats):
1) Sherwin Williams Duraplate 6100; 1/16 inch DFT
2) Tnemec Series 435 Perma-Glaze; 20.0 to 30.0 mils DFT

2. System II (H2S less than 100 ppm, Moderate to Heavy Abrasion)
a. System Type: Modified Epoxy Mortar
b. Surface Preparation: SSPC-SP 13/NACE 6. Abrasive blast clean to ICRI 310.2, CSP 4 – 6. Patching:
1) Sherwin Williams Duraplate 2300; As needed
2) Tnemec Series 218 MortarClad; As Needed
c. Series 434 Perma-Shield H2S; 1/8 inch DFT (nominal 125 mils)

3. System III (H2S more than 100 ppm, Moderate to Heavy Abrasion)
a. System Type: Modified Epoxy Mortar.
b. Surface Preparation: SSPC-SP 13/NACE 6. Abrasive blast clean to ICRI 310.2, CSP 4 – 6. Patching:
1) Sherwin Williams Duraplate 2300
2) Tnemec Series 218 MortarClad; As Needed
c. Mortar:
1) Sherwin Williams Duraplate 6100; 1/8 inch DFT (nominal 125 mils)
2) Series 434 Perma-Shield H2S; 1/8 inch DFT (nominal 125 mils)
d. Finish (One or More Coats):
1) Sherwin Williams Duraplate 6100; 20.0 – 30.0 mils DFT
2) Series 435 Perma-Glaze; 20.0 - 30.0 mils DFT

4. System IV (H2S more than 100 ppm, Moderate to Heavy Abrasion)
a. System Type: Semi Structural Epoxy
b. Surface Preparation: SSPC-SP 13/NACE 6. Abrasive blast clean to ICRI 310.2, CSP 4 – 6
c. Surfacing:
1) Sherwin Williams Duraplate 2300, ¼ inch DFT nominal 250 mils
d. Finish (One or More Coats):
1) Sherwin Williams Duraplate 6100; 125.0 – 150.0 mils DFT

5. Chemical Corrosion Protective Coating
a. Surface Preparation: SSPC-SP 13/NACE 6. Abrasive blast clean to ICRI 310.2, CSP 4 – 6.
b. Primer:
1) Sherwin Williams Duraplate 235 PW, Phenalkamine Epoxy; 1-coat @ 4-8 mils DFT
c. Finish (One or More Coats):
1) Sherflex Elastomeric Urethane; Aromatic Hybrid Polyurethane; 1-coat @ 60-80 mils DFT

2.07 COATING SYSTEMS FOR CONCRETE BLOCK MASONRY

A. Exposed, indoors and outdoors, as shown.
1. System: Acrylic, Concrete: High molecular weight acrylic coating material shall have a minimum solids content of 35 percent by volume. Prime coat shall be an acrylic filler and sealer for concrete surfaces.
a. Prime coat (Filler/sealer), Tnemec 180 Tneme-Crete, Sanitile 100, or ENGINEER-approved equal.
b. Finish coats (2 or more, DFT = 3 mils), Tnemec 180 Tneme- Crete, Carbocrylic 3359 MC (DFT = 6 mils) or ENGINEER-approved equal.

B. Submerged in wastewater, including all vertical masonry surfaces above waterline as shown.
   1. System: Epoxy Mortar: High-build, 3-componet amine cured epoxy mortar, shall have a solids content of 100 percent by volume, suitable for long-term immersion and atmospheric exposure to wastewater. Filler-resurfacer compound shall be a 3-component epoxy cementitious thin overlay material used to fill voids and rough areas and must feather-edge capable. Epoxy Glaze (finish) coat shall be a 100-percent-solids epoxy suitable for long-term immersion and atmospheric exposure to wastewater.
      a. Filler/Resurfacre thin Overlay (Thickness = minimum 1/16”), Tnemec 218 MortarClad, or ENGINEER-approved equal.
      b. Epoxy Mortar (DFT = 125 mils) Tnemec 434 Perma-Shield, or ENGINEER-approved equal.
      c. Finish coat (DFT = 15-20 mils), Tnemec 435 Perma-Glaze, or ENGINEER-approved equal.

C. Exterior surfaces, above grade.
   1. System: Waterproofing: Two coats of a clear, non-staining, silane-modified-siloxane masonry waterproofing material. The waterproofing system after application shall be provided with not less than a five-year warranty on the performance of the product.
      a. Where EPA Allows Solvents: Chemstop, "WB Heavy Duty”; Rainguard, "XS", Chemprobe / Prime a Pell H2O; or ENGINEER-approved equal.
      b. Where EPA Prohibits Solvents: Chemstop, "WB Regular / Heavy Duty"; Rainguard's "Blok-Lok"; Rainproof's "Chem-Trete #45", Chemprobe / Prime A Pell H2O; or ENGINEER-approved equal.
   2. Surfaces shall be cleaned with a chemical (approved by waterproofing manufacturer) cleaner and power wash. Surfaces shall be clean and dry before application of waterproofing. Method and rate of application shall be in accordance with manufacturer's published instructions. A manufacturer's representative shall be present during applications if necessary for warranty.

PART 3 - EXECUTION

3.01 INSPECTION

A. Examine surfaces scheduled to receive coating for conditions that will adversely affect application, permanence, or quality of work and which cannot be put into an acceptable condition through surface preparation.

B. Do not proceed with surface preparation or coating application until conditions are suitable.

3.02 ACCEPTANCE OF SURFACES

A. The commencement of coating work in any area or space will be construed as acceptance of the surface as being satisfactory.

3.03 PREPARATION AND APPLICATION

A. Preparation and application shall be in accordance with coating systems (PART 2).

3.04 FINAL INSPECTION

A. Protect all coated surfaces against damage until the date of final acceptance.

B. Conduct a final inspection of all coating work and recoat or retouch any areas or surfaces found deficient in complying with these Specifications.

3.05 PIPING IDENTIFICATION

A. All visible piping ¾-inch and greater which is accessible for maintenance and operations shall be color-coded and identified with appropriate identification markers. Direction of flow arrows are to be included with each identification mark unless otherwise specified.

B. Each marker shall be black lettering on a yellow or white background and have a clearly printed legend to identify the contents of the pipe.

C. Locations for pipe markers to be as follows:

1. Adjacent to each valve (except as plumbing fixtures and equipment).
2. At each branch and riser take-off.
3. At each pipe passage through wall, floor, and ceiling construction.
4. At each pipe passage to underground
5. On all horizontal pipe runs, marked every 30 feet.

3.06 PIPE COLOR CODE

A. All piping color coding shall follow the ANSI/ASME A13.1 Labeling guidelines.

END OF SECTION

SECTION 10 1400 – SIGNAGE

PART 1 – GENERAL

1.01 SECTION INCLUDES

A. Cash allowance for signs

B. Room and door signs

C. Interior directional and informational signs

D. Luminous egress path marking and other "glow-in-the-dark" signs

E. Emergency evacuation maps

F. Building identification signs

G. Plaque

H. Traffic signs

1.02 PRICE AND PAYMENT PROCEDURES

A. Room and door signs are not covered by the allowance.

B. Allowance amount covers purchase and delivery but not installation.

1.03 REFERENCE STANDARDS

A. 36 CFR 1191 - Americans with Disabilities Act Accessibility Guidelines for Buildings and Facilities; Final Rule; (ADA Standards for Accessible Design)

B. ANSI/ICC A117.1 - American National Standard for Accessible and Usable Buildings and Facilities; International Code Council

C. UL 1994 - Luminous Egress Path Marking Systems

1.04 SUBMITTALS

A. See Section 01 3300 – Submittal Procedures.

B. Product Data: Manufacturer's printed product literature for each type of sign, indicating sign styles, font, foreground and background colors, locations, overall dimensions of each sign.

C. Signage Schedule: Provide information sufficient to completely define each sign for fabrication, including room number, room name, other text to be applied, sign and letter sizes, fonts, and colors.
   1. When room numbers to appear on signs differ from those on the drawings, include the drawing room number on schedule.
   2. When content of signs is indicated to be determined later, request such information from Owner through Engineer at least 2 months prior to start of fabrication; upon request, submit preliminary schedule.
   3. Submit for approval by Owner through Engineer prior to fabrication.

D. Samples: Submit two samples of each type of sign, of size similar to that required for project, illustrating sign style, font, and method of attachment.

E. Selection Samples: Where colors are not specified, submit two sets of color selection charts or chips.

F. Verification Samples: Submit samples showing colors specified.

G. Manufacturer's Installation Instructions: Include installation templates and attachment devices.

H. Maintenance Materials: Furnish the following for Owner's use in maintenance of project.
   1. Curved Sign Media Suction Cups: One for each 100 signs; for removing media.

1.05 QUALITY ASSURANCE

A. Manufacturer Qualifications: Company specializing in manufacturing the products specified in this section with minimum three years of documented experience.

1.06 DELIVERY, STORAGE, AND HANDLING

A. Package signs as required to prevent damage before installation.

B. Package room and door signs in sequential order of installation, labeled by floor or building.

C. Store tape adhesive at normal room temperature.

1.07 FIELD CONDITIONS

A. Do not install tape adhesive when ambient temperature is lower than recommended by manufacturer.

B. Maintain this minimum temperature during and after installation of signs.

PART 2 – PRODUCTS

2.01 MANUFACTURERS

A. Flat Signs:
   1. Best Sign Systems, Inc
   2. Cosco Industries (ADA signs); ADA Series 1
   3. Cosco Industries (non-ADA signs); Changeable Message Signs
   4. Inpro; Aspen produced in one-piece photopolymer media
   5. Mohawk Sign Systems, Inc
   6. Seton Identification Products
   7. Or ENGINEER-approved equal

B. Curved Signs:
   1. Vista System
   2. Or ENGINEER-approved equal

C. Dimensional Letter Signs:
   1. Cosco Industries; Cast Aluminum
   2. Inpro; S600-060
   3. Or ENGINEER-approved equal

D. Plaques:
   1. Cosco Industries; Cast Aluminum
   2. Or ENGINEER-approved equal

E. Photoluminescent Marking and Signage:
   1. Ecoglo, Inc; Guidance Strips
   2. Or ENGINEER-approved equal

2.02 SIGNAGE APPLICATIONS

A. Accessibility Compliance: All signs are required to comply with ADA Standards for Accessible Design and ANSI/ICC A 117.1 and applicable building codes, unless otherwise indicated; in the event of conflicting requirements, comply with the most comprehensive and specific requirements.

B. Room and Door Signs: Provide a sign for every doorway, whether it has a door or not, not including corridors, lobbies, and similar open areas.

1. Sign Type: Flat signs with engraved panel media as specified.
2. Provide "tactile" signage, with letters raised minimum 1/32-inch and Grade II braille.
3. Character Height: 1 inch.
4. Sign Height: 2 inches, unless otherwise indicated.
5. Office Doors: Identify with room numbers to be determined later, not the numbers shown on the drawings; in addition, provide "window" section for replaceable occupant name.
6. Conference and Meeting Rooms: Identify with room numbers to be determined later, not the numbers shown on the drawings; in addition, provide "window" section with sliding "In Use/Vacant" indicator.
7. Service Rooms: Identify with room names and numbers to be determined later, not those shown on the drawings.
8. Rest Rooms: Identify with pictograms, the names "MEN", "WOMEN", or “UNISEX” room numbers to be determined later, and braille.

C. Interior Directional and Informational Signs:
1. Sign Type: Same as room and door signs.
2. Sizes: As indicated on the drawings.
3. Allow for 20 signs 4 inches high by 16 inches long.
4. Wording of signs is scheduled on the drawings.
5. Where suspended, ceiling mounted, or projecting from wall signs are indicated, provide two-sided signs with same information on both sides.

D. Luminous Egress Path Marking and Other "Glow-in-the-Dark" Signs: Photoluminescent media.
1. Provide luminous egress path marking as required by local authority having jurisdiction.
2. Allow for total of 100 directional signs, approximately 6 inches square.
3. Allow for 1,000 linear feet of guidance strips.
4. Provide one numbered seat marker for each seat in auditorium and one numbered row marker for each row, each side of aisles.

E. Emergency Evacuation Maps:
1. Allow for one map per elevator lobby.
2. Map content to be provided by Owner.
3. Use clear plastic panel silk-screened on reverse, in brushed aluminum frame, screw-mounted.

F. Recognition/Donor Panels: Engraved panel media; individual name signs attached with magnetic tape to fixed panel.
1. Dimensions and Number of Name Signs: As indicated on the drawings.
2. Provide all name signs whether engraved or not, for uniform overall appearance.
3. Color: Color as selected.
4. Products:
    a. Inpro; S460 Donor Board
    b. Or ENGINEER-approved equal

G. Building Identification Signs:
1. Use individual metal letters.
2. Mount on outside wall in location shown on drawings.

H. Other Dimensional Letter Signs: Wall-mounted.
1. Exterior: Allow for total of 50 letters, 6 inches high, metal.
2. Interior: Allow for total of 50 letters, 6 inches high, metal.

I. Plaque: See Allowance for details.

J. Traffic Signs: To match campus standards; locate where indicated on the drawings.

2.03 SIGN TYPES

A. Flat Signs: Signage media without frame.
   1. Edges: Square.
   2. Corners: Square.
   3. Frame Finish: Natural (clear) anodized.
   4. Clear Cover: For customer produced sign media, provide clear cover of polycarbonate plastic, glossy on back, non-glare on front.
   5. Wall Mounting of One-Sided Signs: Tape adhesive.
   6. Wall and Ceiling Mounting of Two-Sided Signs: Aluminum wall bracket, powder coated, color selected from manufacturer's standard colors, attached with screws in predrilled mounting holes, set in clear silicone sealant.
   7. Suspended Mounting: Stainless steel suspension cables, cable clamps, and ceiling fastener suitable for attachment to ceiling construction indicated.

B. Radius / Curved Signs: One-piece, curved extruded aluminum media holder securing flat, flexible sign media by curved lip on two sides; other two sides closed by end caps; concealed mounting attachment.
   1. Sizes: As indicated on the drawings.
   2. Finish: Natural (clear) anodized.
   3. Sign Orientation: Curved in horizontal section.
   4. End Caps: Aluminum with finish matching frame and stainless steel screw attachment.
   5. End Caps: Plastic, color selected from manufacturer's standard colors, paintable.
   6. Clear Cover: For customer produced sign media, provide clear cover of polycarbonate plastic, glossy on back, non-glare on front.
   7. Wall Mounting of One-Sided Signs: Mechanical anchorage, with predrilled holes, and set in clear silicone sealant.
   8. Wall and Ceiling Mounting of Two-Sided Signs: Aluminum wall bracket, powder coated, color selected from manufacturer's standard colors, attached with screws in predrilled mounting holes, set in clear silicone sealant.
   9. Mounting of Floor Mounted Pylon Signs: Oval shaped steel base anchored to floor.
   10. Suspended Mounting: Stainless steel suspension cables, cable clamps, and ceiling fastener suitable for attachment to ceiling construction indicated.
   11. Directories: For customer-produced media; provide divider strips.

C. Color and Font: Unless otherwise indicated:
   1. Character Font: Helvetica, Arial, or another sans serif font
   2. Character Case: Upper case only
   3. Background Color: Clear
   4. Character Color: Contrasting color

2.04 ACCESSORIES

A. Concealed Screws: Stainless steel, galvanized steel, chrome plated, or other non-corroding metal.

B. Exposed Screws: Chrome plated.

C. Tape Adhesive: Double sided tape, permanent adhesive.

PART 3 EXECUTION

3.01 EXAMINATION

A. Verify that substrate surfaces are ready to receive work.

3.02 INSTALLATION

A. Install in accordance with manufacturer's instructions.

B. Install neatly, with horizontal edges level.

C. Locate signs where indicated:
   1. Room and Door Signs: Locate on wall at latch side of door with centerline of sign at 60 inches above finished floor.
   2. If no location is indicated obtain Owner's instructions.

D. Protect from damage until Substantial Completion; repair or replace damage items.

END OF SECTION

SECTION 10 2813 – TOILET ACCESSORIES

PART 1 – GENERAL

1.01 THE REQUIREMENT

A. All labor, materials, equipment, and services necessary to furnish and install toilet accessories as indicated or specified.

1.02 SUBSTITUTIONS

A. Substitutions shall be allowed upon Engineer's approval.

1.03 SUBMITTALS

A. Submit shop drawings in accordance with Section 01 33 00 – Submittal Procedures for all work under this Section.

1.04 QUALITY ASSURANCE

A. This Specification is based on products as manufactured by Bobrick Dispensers, Inc., Los Angeles, CA., unless otherwise noted. Products equaling or exceeding specification requirements as manufactured by D.J. Alexander Corporation, Charles Parker Company or American Dispenser Company are acceptable for bidding.

1.05 GENERAL REQUIREMENTS

A. Review drawings for locations of toilet accessories and verify dimensional requirements for recessed units. Coordinate location of blocking and built-in anchorage devices.

B. Notify Architect of any conflicts with accessory locations and partition dimensions or piping interference.

C. Use concealed fastening wherever possible.

D. Provide anchors, bolts and other necessary fasteners, and attach accessories securely to walls and partitions in locations as shown or directed.

E. Provide products of the same manufacturer for each type of accessory unit and for units exposed in the same areas, wherever possible.

F. Stamped names or labels on exposed faces of units will not be permitted, except where otherwise specified.

PART 2 – PRODUCTS

2.01 ACCESSORIES

A. Toilet Tissue Dispenser: B-265

B. Combination Paper Towel Dispenser and Disposal: B-39 003

C. Sanitary Napkin Vendor: B-3600 x 225

D. Sanitary Napkin Disposal: B-270

E. Toilet Seat Cover Dispenser: B-274

F. Soap Dispenser: B-822, counter mounted.

G. Grab Bars: B-6806 x 36, B69606 x 42

PART 3 – EXECUTION

3.01 INSTALLATION

A. Install all toilet accessories at locations indicated in strict accordance with manufacturer's printed instructions.

B. Install concealed mounting devices and fasteners fabricated of the same material as the accessories or of galvanized steel.

C. Provide theft-resistant fasteners for all accessory mountings.

D. Secure toilet room accessories to adjacent walls and partitions in accordance with the manufacturer's instructions for each item and each type of substrate construction.

E. Install grab bars in accordance with manufacturer's printed instructions at locations indicated. Install connectors or support angles between studs. Attachment of support angles to studs must be sufficient to withstand a horizontal pull of 300 pounds. Accurately position connector assemblies and tighten to the support angles before wall finish is applied. After wall surface is finished, secure concealed mounting plate to connector assembly using stainless steel machine screws furnished by the manufacturer. Where grab bars installed on toilet compartments make through-bolted connection with specified anchors.

END OF SECTION

SECTION 10 44 16 – FIRE EXTINGUISHERS

PART 1 – GENERAL

1.01 THE REQUIREMENT

A. Provide safety equipment as outlined and specified below.

1.02 SUBMITTALS

A. General: Submittals shall be furnished in accordance with Section 0133 00 - Submittals.

PART 2 – PRODUCTS

2.01 FIRE EXTINGUISHERS

A. Fire Extinguisher Requirements: Supply and install fire extinguishers as required by NFPA 820, and local building codes or requirements. The fire extinguishers shall be UL and FM certified for their intended use.

B. Fire Extinguisher Locations: Fire extinguisher locations shall be determined by the Fire Protection System Contractor to be as required by NFPA 820, OSHA and the local building code.

PART 3 – EXECUTION

3.01 SERVICES OF MANUFACTURER

A. Inspection, Startup and Field Adjustment: The proper location and installation of safety equipment shall be verified and approved by the building inspector. Proper fire extinguisher installation and location shall be approved by the local fire authority having jurisdiction.

END OF SECTION

SECTION 11 5300 – LABORATORY EQUIPMENT

PART 1 – GENERAL

1.01 THE REQUIREMENT

A. Provide the following laboratory equipment as specified below.

PART 2 – PRODUCTS

2.01 LIST OF LABORATORY EQUIPMENT TO BE FURNISHED:

A. Compound Microscope (100X magnification w/computer interface)

B. Portable Meter, Chlorine and pH (Hach 5870012)

C. Filter Paper Grade 42 - 15 cm diameter - 100pk 2x (Whatman 1442-150)

D. Graduated Cylinder 50 mL (Kimble 20024-50)

E. Kimble Graduated Beaker 100 mL (Kimble 14000-100)

F. Kimble Graduated Beaker 50 mL (Kimble 14000-50)

PART 3 – EXECUTION (NOT USED)

END OF SECTION

SECTION 12 3553.13 – METAL LABORATORY CASEWORK

PART 1 – GENERAL

1.01 SUMMARY

A. Section Includes:
   1. Steel casework
   2. Table frames
   3. Work surfaces
   4. Sinks and outlet
   5. Service fittings
   6. Accessory equipment

1.02 ALTERNATE PROPOSALS

A. Proposals are invited from alternate manufacturers only if they comply with the minimum design requirements and the minimum performance requirements. A notarized letter stating full compliance must be included in alternate proposals signed by an officer of the manufacturer to ensure compliance.

1.03 CASEWORK DESIGN REQUIREMENTS

A. Flush construction: Surfaces of doors, drawers and panel faces shall align with cabinet fronts without overlap of case ends, top or bottom rails. Horizontal and vertical case shell members (panels, top rails, and bottoms) shall meet in the same plane without overlap, cracks or crevices.

B. Slimline styling: Front width of end panels 3/4” and front height of top and bottom members 1".

C. Self-supporting units: Completely welded shell assembly without applied panels at ends, backs, or bottoms, so that cases can be used interchangeably or as a single, stand-alone unit.

D. Interior of case units: Easily cleanable, flush interior. Base cabinets, 30" and wider, with double swinging doors shall provide full access to complete interior without center vertical post.

E. Drawers: Sized on a modular basis for interchange to meet varying storage needs, and designed to be easily removable in field without the use of special tools.

F. Case openings: Rabbeted joints all four sides of case opening for hinged doors and two sides for sliding doors in order to provide dust resistant case.

G. Framed glazed doors: Identical in construction, hardware, and installation to solid panel doors. Design frame glazed doors to be removable for glass replacement.

1.04 CASEWORK PERFORMANCE REQUIREMENTS

A. Structural performance requirements: Casework components shall withstand the following minimum loads without damage or permanent deformation to the component or to the casework operation:
   1. Steel base unit load capacity: 500 lbs. per lineal foot
   2. Suspended units: 300 lbs.
   3. Drawers in a cabinet: 150 lbs.
   4. Utility tables (4 legged): 300 lbs.
   5. Hanging wall cases: 300 lbs.
   6. Load capacity for shelves of base units, wall cases and tall cases: 40 lbs. per square foot, up to 200 lbs.

B. Metal Finish Performance Requirements:
   1. Abrasion resistance: Maximum weight loss of 5.5 mg per 100 cycle when tested on a Taber Abrasion Tester #E40101 with 1000 gm wheel pressure and Calibrase #CS10 wheel.
   2. Hardness: Surface hardness equivalent to 4H pencil.
   3. Humidity resistance: Withstand 1000 hour exposure in saturated humidity at 100°F.
   4. Moisture resistance:
      a. No visible effect to surface finish after boiling water trickled over test panel inclined at 45°F for five minutes.
      b. No visible effect to surface finish following 100 hours of continuous application of a water-soaked cellulose sponge, maintained in a wet condition throughout the test period.
   5. Adhesion: Score finish surface of test panel with razor blade into 100 squares, 1/16" x 1/16", cutting completely through the finish but with minimum penetration of the substrate, and brush away particles with soft brush. Minimum 95 squares shall maintain their finish.
   6. Salt spray: Withstand minimum 200-hour salt spray test.

C. Chemical Resistance Finish Performance Requirements:
   1. See Section 1.05 of this specification section.

1.05 WORK SURFACE PERFORMANCE REQUIREMENTS

A. Test Procedure: Apply five drops of each reagent to surface and cover with 25mm watch glass, convex side down; test volatiles using one-ounce bottle stuffed with saturated cotton. After 24-hour exposure, flush surface, clean, rinse, and wipe dry.

B. Evaluation ratings: Change in surface finish and function shall be described by the following ratings:
   1. No Effect: No detectable change in surface material.
   2. Excellent: Slight detectable change in color or gloss, but no change to the function or life.
   3. Good: Clearly discernable change in color or gloss, but no significant impairment of work surface function or life.
   4. Fair: Objectionable change in appearance due to surface discoloration or etch, possibly resulting in deterioration of function over an extended period.
   5. Poor: Pitting, cratering, or permanently etching of work surface material; obvious and significant deterioration.

6. Test Results – Epoxy Resin Work Surface (Black):

CHEMICAL – ACIDS		RATING
Hydrochloric Acid	20%	No Effect
Hydrochloric Acid	37%	No Effect
Nitric Acid	20%	Excellent
Nitric Acid	70%	Good
Sulfuric Acid	30%	No Effect
Sulfuric Acid	77%	No Effect
Sulfuric Acid	96%	Poor
Phosphoric Acid	85%	No Effect
Perchloric Acid	60%	No Effect
Aqua Regia	--	No Effect
Chromic Acid	60%	Good
Acetic Acid	98%	No Effect
Formic Acid	90%	No Effect
Boric Acid	Sat.	No Effect
Citric Acid	Sat.	No Effect
Oxalic Acid	Sat.	No Effect
Hydrobromic Acid	48%	No Effect
Hydroflouric Acid	48%	Good
Vinegar	--	No Effect

CHEMICAL - BASES		
Ammonium Hydroxide	28%	No Effect
Sodium Hydroxide	10%	No Effect
Sodium Hydroxide	40%	No Effect
Sodium Hydroxide	Flake	No Effect
Potassium Hydroxide	Flake	No Effect

CHEMICAL – SALTS		
Zinc Chloride	Sat.	No Effect
Calcium Hypochlorite	Sat.	No Effect
Clorox Bleach	--	No Effect
Silver Nitrate	10%	No Effect
Sodium Sulfide	Sat.	No Effect
Sodium Chloride	Sat.	No Effect
Iodine, Tincture	--	No Effect
Hydrogen Peroxide	--	No Effect
Phenol	80%	No Effect
Cresol	--	No Effect
Formaldehyde	40%	No Effect
Mineral Oil	100%	No Effect
Glycerin	100%	No Effect

CHEMICAL – SOLVENTS		
Methyl Alcohol	100%	No Effect
Ethyl Alcohol	100%	No Effect
Buty Alcohol	100%	No Effect
Naptha	100%	No Effect
Turpentine	100%	No Effect
Kerosine	100%	No Effect
Haetane	100%	No Effect
Gasoline	100%	No Effect
Benzene	100%	No Effect
Toluene	100%	No Effect
Xylene	100%	No Effect
Acetone	100%	No Effect
Methyl Ethyl Ketone	100%	No Effect
Methyl Isobutyl Ketone	100%	No Effect
Ethyl Acetate	100%	No Effect
Ethyl Ether	100%	No Effect
Chloroform	100%	No Effect
Methyl Chloride	100%	No Effect
Trichlorethylene	100%	No Effect
Carbon Tetrachloride	100%	Excellent
Monochloro Benzene	100%	No Effect
Dioxane	100%	No Effect
Furfural	--	No Effect

CHEMICAL – DYES		
Congo Red	1%	No Effect
Eosin Y	0.5%	No Effect
Gentian Violet	1%	No Effect
Indigo Carmen	0.5%	No Effect
Methyl Green	0.5%	No Effect
Wrights Blood Stain	0.35%	No Effect

1.06 SUBMITTALS

A. Submittals shall be furnished in accordance with Section 01 3300 – Submittal Procedures.

B. Shop Drawings: Provide 3/4" = 1'-0" scale elevations of individual and battery of casework units, cross sections, rough-in and anchor placements, tolerances, and clearances. Indicate relation of units to surrounding walls, windows, doors, and other building components. Provide 1/4" = 1'0" rough-in plan drawings for coordination with trades. Rough-in shall show free area.

C. Product Data: Submit manufacturer's data for each component and item of laboratory equipment specified. Include component dimensions, configurations, construction details, joint details, and attachments, utility and service requirements and locations.

D. Product Samples Upon Request: Submit for approval:
   1. Top sample
   2. Finish sample (3" X 5" painted steel)

E. Test Reports: When requested by The Town submit independent, third party, laboratory certified test reports verifying conformance to test performance specified.

1.07 QUALITY ASSURANCE

A. Single source responsibility: Casework, work surfaces, laboratory fume hood and equipment and accessories shall be manufactured or furnished by a single laboratory furniture company.

B. All casework construction and performance characteristics shall be in full compliance with SEFA 8 standards. At the owner’s request, independent, third party testing must be submitted validating compliance and adheres to the architectural specifications.

C. Manufacturer's qualifications: Modern plant with proper tools, dies, fixtures and skilled workmen to produce high quality laboratory casework and equipment, and shall meet the following minimum requirements:
   1. Ten years or more experience in manufacture of laboratory casework and equipment of type specified.
   2. Ten installations of equal or larger size and requirements.

D. Installer's qualifications: Factory trained and/or certified by the manufacturer.

E. Cabinet identification: Cabinets are identified on drawings by manufacturer's catalog numbers. Unless otherwise modified on drawings or in specifications, catalog description constitutes specific requirements for each type of cabinet.

1.08 REFERENCE STANDARDS

A. All casework, worksurface and service fixture construction and performance characteristics shall be in full compliance with SEFA (Scientific Equipment and Furniture Association) standards. At the owner’s request, independent, third party testing must be submitted validating compliance and adheres to the architectural specifications.
   1. SEFA 1.2 – Laboratory Fume Hoods
   2. SEFA 2.3 – Installation of Scientific Laboratory Furniture and Equipment
   3. SEFA 3 – Work Surfaces
   4. SEFA 7 – Laboratory and Hospital Fixtures
   5. SEFA 8 – Laboratory Furniture

1.09 DELIVERY, STORAGE AND HANDLING

A. Schedule delivery of casework and equipment so that spaces are sufficiently complete and material can be installed immediately following delivery.

B. Protect finished surfaces from soiling or damage during handling and installation. Keep covered with polyethylene film or other protective coating.

C. Protect all work surfaces throughout construction period with 1/4" corrugated cardboard completely covering the top and securely taped to edges. Mark cardboard in large lettering "No Standing."

1.10 PROJECT CONDITIONS

A. Do not deliver or install equipment until the following conditions have been met:
   1. Windows and doors are installed; and the building is secure and weather tight.
   2. Ceiling, overhead ductwork and lighting are installed.
   3. All painting is completed and floor tile is installed.

PART 2 – PRODUCTS

2.01 MANUFACTURER

A. Design, materials, construction, and finish of casework specified are the minimum acceptable standard of quality for inset steel laboratory casework. The basis of this product specification is Fisher Hamilton L.L.C., 1316 18th Street, Two Rivers, WI 54241.

2.02 CASEWORK MATERIALS

A. Sheet steel: Mild, cold rolled and leveled unfinished steel

B. Minimum gauges:
   1. 20 gauge: Solid door interior panels, drawer fronts, scribing strips, filler panels, enclosures, drawer bodies, shelves, security panels, and sloping tops.
   2. 18 gauge: Case tops, ends, bottoms, bases, backs, vertical posts, uprights, glazed door members, door exterior panels, and access panels.
   3. 16 gauge: Top front rails, top rear gussets, intermediate horizontal rails, table legs and frames, leg rails, and stretchers.
   4. 14 gauge: Drawer suspensions, door and case hinge reinforcements, and front corner reinforcements.
   5. 11 gauge: Table leg corner brackets and gussets for leveling screws.

C. Glass for glazed sliding doors and unframed doors:
   1. 6mm Clear Float Glass (unframed)

2.03 CASEWORK FABRICATION

A. Base Units and Cases:
   1. Base units and 37"-high wall cases: End panels and back reinforced with internal reinforcing front and rear posts.
   2. Posts: Front post fully closed with full height reinforcing upright. Shelf adjustment holes in front and rear posts shall be perfectly aligned for level setting, adjustable to 1/2" o.c.
   3. Secure intersection of case members with spot and arc welds. Provide gusset reinforcement at front corners.
   4. Base unit backs: Provide drawer units without backs and cupboard units with removable backs for access to services behind units.
   5. Base unit backs: Provide fixed backs at all drawer and cupboard units. No access to services behind.
   6. Bottoms: Base units and 37"-high wall cases shall have one piece bottom with front edge formed into front rail, rabbeted as required for swinging doors and drawers and flush design for sliding doors.
   7. Top rail for base units: Interlock with end panels, flush with front of unit.
   8. Horizontal intermediate rails: Recessed behind doors and drawer fronts.
   9. Base for base units: 4" high x 3" deep with formed steel base and 11 gauge die formed steel gussets at corners. Provide 3/8" diameter leveling screw with integral bottom flange of minimum 0.56 sq. in. area at each corner, accessible through openings in toe space.

B. Drawers: Steel
   1. Drawer fronts: 3/4" thick, double wall construction, pre-painted prior to assembly and sound deadened.
   2. Drawer bodies: Bottom and sides formed into one-piece center section with bottom and sides coved and formed top edges. Front and back panels spot welded to center section.

3. Drawer suspension: Heavy duty coved raceways for both case and drawer with nylon tired, ball bearing rollers; self-centering and self-closing when open to within 3" of the closed position.
4. Provide drawer with rubber bumpers. Friction centering devices are not acceptable.
5. Provide security panels for drawers with keyed different locks.
6. File drawers: Provide with 150 lbs. full extension slides for full access and operation.

C. Drawer suspension:
1. Heavy duty coved raceways for both case and drawer with nylon tired, ball bearing rollers; self-centering and self-closing when open to within 3" of the closed position.
2. Accuride or ENGINEER-approved equal 150-lb. full extension drawer slides. File drawers: Provide with 150# full extension slides for full access and operation.
3. Provide drawer with rubber bumpers. Friction centering devices are not acceptable.

D. Doors: Steel
1. Solid panel doors: 3/4" thick, double wall, telescoping box steel construction with interior prepainted and sound deadened. Reinforce interior of front panel with welded steel hat channels. Hinges with screws to internal 14 gauge reinforcing in case and door. Hinges shall be removable; welding of hinges not acceptable. Doors shall close against rubber bumpers.
2. Unframed sliding glass doors: Glass with edges ground set in extruded aluminum shoe with integral pulls, wheel assemblies and top and bottom extruded aluminum track. Provide rubber bumpers at fully opened and closed door position.

E. Shelves:
1. Form front and back edges down and back 3/4". Form ends down 3/4”.
2. Reinforce shelves over 36" long with welded hat channel reinforcement the full width of shelf.
3. Pull out shelves: Same suspension as specified for drawers.

F. Base molding: 4" high, to be furnished and installed by flooring contractor.

G. Corner base guards: 4" high #304 stainless steel corner guards.

H. Hardware:
1. Drawer and hinged door pulls: Clear anodized extruded aluminum, screw attached on 4" centers.
a. Pull Location
1) Configuration 1
Horizontal at drawers, vertical at doors
Brushed Aluminum rectangular style finger pull
2. Sliding door pulls: Recessed stainless steel, styled as shown and sized to harmonize with drawer pulls.
3. Hinges: Institutional type, five knuckle projecting barrel hinges, minimum 2-1/2" long, type 302 or 304 stainless steel. Provide two hinges for doors up to 36" high; three hinges for doors over 36" high. Drill each leaf for three screw attachment to door and frame.
4. Door catches: Adjustable type, spring actuated nylon roller catches.
5. Elbow catches: Spring type of cadmium plated steel, with strike of suitable design.

2.04 METAL FINISH

A. Metal finish:
1. Preparation: Spray clean metal with a heated cleaner/phosphate solution, pre-treat with iron phosphate spray, water rinse, and neutral final seal. Immediately dry in heated ovens, gradually cooled, prior to application of finish.

2. Application: Electrostatically apply urethane powder coat of selected color and bake in controlled high temperature oven to assure a smooth, hard satin finish. Surfaces shall have a chemical resistant, high grade laboratory furniture quality finish of the following thickness: Liquid, dipped, solvent based finishes are not and will not be acceptable.
3. Color: Chameleon
    a. Exterior and interior exposed surfaces: 1.5 mil average and 1.2 mil min.
    b. Backs of cabinets and other surfaces not exposed to view: 1.2 mil average.

B. Cabinet Surface Finish Tests:

All casework construction and performance characteristics shall be in full compliance with SEFA 8 standards. At the owner's request, independent, third party performance testing must be submitted validating compliance and adheres to the finish specifications.

1. Chemical Spot Test
    a. Purpose of Test
        1) The purpose of the chemical spot test is to evaluate the resistance a finish has to chemical spills.

            Note: Many organic solvents are suspected carcinogens, toxic and/or flammable. Great care should be exercised to protect personnel and the environment from exposure to harmful levels of these materials.

        2) Test Procedure
            (a) Obtain one sample panel measuring 14" x 24" (355.6mm x 609.6mm). The received sample to be tested for chemical resistance as described herein.
            (b) Place panel on a flat surface, clean with soap and water and blot dry. Condition the panel for 48-hours at 73±3°F / 23±2°C and 50±5% relative humidity. Test the panel for chemical resistance using forty-nine different chemical reagents by one of the following methods:
            (c) Method A – Test volatile chemicals by placing a cotton ball saturated with reagent in the mouth of a one-ounce (29.574cc) bottle and inverting the bottle on the surface of the panel.
            (d) Method B – Test volatile chemicals by placing five drops of the reagent on the surface of the panel and covering with a 24mm watch glass, convex side down.
            (e) For both of the above methods, leave the reagents on the panel for a period of one hour. Wash off the panel with water, clean with detergent and naphtha, and rinse with deionized water. Dry with a towel and evaluate after 24-hours at 73±3°F / 23°±2°C and 50±5% relative humidity using the following rating system:
                (1) Level 0: No detectable change
                (2) Level 1: Slight change in color or glos
                (3) Level 2: Slight surface etching or severe staining.
                (4) Level 3: Pitting, cratering, swelling, or erosion of coating. Obvious and significant deterioration.

Test #	Chemical Reagent	Test Method
1	Acetate, Amyl	A
2	Acetate, Ethyl	A
3	Acetic Acid, 98%	B
4	Acetone	A
5	Acid Dichromate, 5%	B
6	Alcohol, Butyl	A

7	Alcohol, Ethyl	A
8	Alcohol, Methyl	A
9	Ammonium Hydroxide, 28%	B
10	Benzene	A
11	Carbon Tetrachloride	A
12	Chloroform	A
13	Chromic Acid, 60%	B
14	Cresol	A
15	Dichlor Acetic Acid	A
16	Dimethylformanide	A
17	Dioxane	A
18	Ethyl Ether	A
19	Formaldehyde, 37%	A
20	Formic Acid, 90%	B
21	Furfural	A
22	Gasoline	A
23	Hydrochloric Acid, 37%	B
24	Hydrochloric Acid, 48%	B
25	Hydrogen Peroxide, 3%	B
26	Iodine, Tincture of	B
27	Methyl Ethyl Ketone	A
28	Methylene Chloride	A
29	Mono Chlorobenzene	A
30	Naphthalene	A
31	Nitric Acid, 20%	B
32	Nitric Acid, 30%	B
33	Nitric Acid, 70%	B
34	Phenol, 90%	A
35	Phosphoric Acid, 85%	B
36	Silver Nitrate, Saturated	B
37	Sodium Hydroxide, 10%	B
38	Sodium Hydroxide, 20%	B
39	Sodium Hydroxide, 40%	B
40	Sodium Hydroxide, Flake	B
41	Sodium Hydroxide, Saturated	B
42	Sulfuric Acid, 33%	B
43	Sulfuric Acid, 77%	B
44	Sulfuric Acid, 96%	B

Test #	Chemical Reagent	Test Method
45	Sulfuric Acid, 77% and Nitric Acid 70%, equal parts	B
46	Toluene	A
47	Trichloroethylene	A
48	Xylene	A
49	Zinc Chloride, Saturated	B

3) Acceptance Level
   (a) Results will vary from manufacturer to manufacturer. Laboratory grade finishes should result in no more than four Level 3 conditions. Suitability for a given application is dependent upon the chemicals used in a given laboratory.

b. Hot Water Test
   1) Purpose of Test
      (a) The purpose of this test is to insure the coating is resistant to hot water.
   2) Test Procedure
      (a) Hot water, 190°F to 205°F (88°C to 96°C), shall be allowed to trickle (with a steady stream and at a rate of not less than 6 ounces (177.44 cc) per minute on the surface, which shall be set at an angle of 45° for a period of five minutes.
   3) Acceptance Level
      (a) After cooling and wiping dry, the finish shall show no visible effect from the hot water.

c. Impact Test
   1) Purpose of Test
      (a) The purpose of this test is to evaluate the ductility of the coating.
   2) Test Procedure
      (a) A one-pound ball approximately 2" (50.8mm) in diameter shall be dropped from a distance of 12" (304.8mm) onto a flat horizontal surface, coated to manufacturer's standard manufacturing method.
   3) Acceptance Level
      There shall be no visible evidence to the naked eye of cracks or checks in the finish due to impact.

d. Paint Adhesion on Steel Test
   1) Purpose of Test
      (a) The paint adhesion test is used to determine the bond of the coating to steel. This does not apply to non-steel products.
   2) Test Procedure
      (a) This test is based on ASTM D2197-86 "Standard Method of Test for Adhesion of Organic Coating". Two sets of eleven parallel lines 1/16" (1.587mm) apart shall be cut with a razor blade to intersect at right angles thus forming a grid of 100 squares. The cuts shall be made just deep enough to go through the coating, but not into the substrate. They shall then be brushed lightly with a soft brush for one minute. Examine under 100-foot candles of illumination.
   3) Acceptance Level
      Ninety or more of the squares shall show finish intact.

e. Paint Hardness on Steel Test
   1) Purpose of Test
      (a) The paint hardness test is used to determine the resistance of the coatings to scratches.
   2) Test Procedure
      (a) Pencils, regardless of their brand, are valued in this way: 8-H is the hardest, and next 11 order of diminishing hardness are 7-H, 6-H, 5-H, 4-H, 3-H, 2-H, H, F, HB, B (soft), 2-B, 3-B, 4-B, 5-B (which are softest).
      (b) The pencils shall be sharpened on emery paper to a wide sharp edge. Pencils of increasing hardness shall be pushed across the paint film in a chisel-like manner until one is found that will cut or scratch the

film. The pencil used before that one, that is the hardest pencil that will not rupture the film, is then used to express or designate the hardness.

3) Acceptance Level
   (a) The paint shall have a hardness of 4-H minimum with no visible puncture of the finish surface.

2.05 EPOXY RESIN WORK SURFACE

A. Material: Chemical and abrasion resistant, durable top of one inch thick cast material of epoxy resins and inert products, cast flat, with a uniform non-glare black matte finish.

B. Backsplash curb: Same material as top, four (4) inches high, butt jointed and cemented to top. Provide where tops abut wall surfaces. Include end curb where top abuts end wall.

2.06 SINKS, DRAINS AND TRAPS

A. Stainless steel sinks: Type 304 stainless steel, No. 4 polish. Provide in 16 gauge material; 14 gauge for sinks with integral fixture ledge, used primarily for hand washing.
   1. Provide ½" radius cove at vertical and horizontal corners and pitch bottom to drain plug.
   2. Seamless joints: Electrically weld, grind and polish smooth all joints rendering joints seamless.
   3. Include crumb cup strainer with tail piece.
   4. Apply heavy mastic type sound deadening coating to underside.
   5. Except for sinks integral with stainless steel top, mount sinks with integral frame; separate frames or mounting rims not acceptable.
   6. Size: 18" x 15" x 10.8" deep or as shown in plans.
   7. Drain Location: Center or as shown in plans.
   8. Fisher Hamilton Model No. D-30c or ENGINEER-approved equal. .

2.07 LABORATORY FITTINGS

A. Water Saver Service Fittings:
   1. Water service faucets and valves shall have renewable unit containing all working parts subject to wear, including replaceable stainless steel seat. Unit shall have serrations for position locking into valve body.
   2. Gooseneck vacuum breakers: Brass forgings integral with gooseneck, with renewable seat and special design valve member for fine flow control.
   3. Goosenecks shall have separate 3/8" IPS coupling securely brazed to gooseneck to provide full thread for attachment of anti-splash outlet fittings, serrated tips and filter pumps.

B. Air, Gas and Vacuum Systems Fittings:
   1. Needle valves: Small pattern needle valve, straightaway type with stainless steel replaceable floating cone and brass seat (non-renewable). Ten serration end is integral with valve body.
   2. Ground key cocks: Straightaway ground key cocks, individually ground and lapped and tested at 100 psi. air under water. Cocks shall have a single arm long easy grip handle with screw-on type index. Ten serrated end is integral with valve body.

C. Handles for service cocks, faucets and remote controls: Four-arm type except ground key cocks. Provide removable screw-on type colored plastic discs with letter stamped on disc in contrasting color as scheduled below:

Gas	Blue/White	Gas
Vacuum	Yellow/Black	Vac.
Compressed Air	Orange/White	C-Air
Cold Water	Green/White	C.W.
Hot Water	Red/White	H.W.
Steam	Black/White	Stm.
Chilled Water	Brown/White	CH.
Distilled Water	White/Black	D.W.

Disk color for special services as determined by the OWNER.

D. Fixture finish: Chrome finish developed by the following sequence of platings over properly prepared brass castings or forgings:

Plating	Minimum Plating Thickness
Chromium (Final)	0.000015 IN.

PART 3 – EXECUTION

3.01 INSTALLATION

A. Casework installation:
   1. Set casework components plumb, square, and straight with no distortion and securely anchored to building structure. Shim as required using concealed shims.
   2. Bolt continuous cabinets together with joints flush, tight and uniform, and with alignment of adjacent units within 1/16" tolerance.
   3. Secure wall cabinets to solid supporting material, not to plaster, lath or gypsum board.
   4. Abut top edge surfaces in one true plane. Provide flush joints not to exceed 1/8" between top units.

B. Work surface installation:
   1. Where required due to field conditions, scribe to abutting surfaces.
   2. Only factory prepared field joints, located per approved shop drawings, shall be permitted. Secure joints in field, where practicable, in the same manner as in factory, with dowels, splines, adhesive or fasteners recommended by manufacturer.
   3. Secure work surfaces to casework and equipment components with material and procedures recommended by the manufacturer.

C. Sink installation: Sinks which were not factory installed shall be set in chemical resistant sealing compound and secured and supported per manufacturer's recommendations.

D. Accessory installation: Install accessories and fittings in accordance with manufacturer's recommendations. Turn screws to seat flat; do not drive.

3.02 ADJUSTING

A. Repair or remove and replace defective work, as directed by The Town upon completion of installation.

B. Adjust doors, drawers, hardware, fixtures and other moving or operating parts to function smoothly.

3.03 CLEANING

A. Clean shop finished casework, touch up as required.

B. Clean countertops with diluted dishwashing liquid and water leaving tops free of all grease and streaks. Use no wax or oils.

3.04 PROTECTION OF FINISHED WORK

A. Provide all necessary protective measures to prevent exposure of casework and equipment from exposure to other construction activity.

B. Advise CONTRACTOR of procedures and precautions for protection of material, installed laboratory casework and fixtures from damage by work of other trades.

END OF SECTION

SECTION 22 0529 – HANGERS AND SUPPORTS FOR PLUMBING PIPING AND EQUIPMENT

PART 1 - GENERAL

1.01 THE REQUIREMENT

A. Provide pipe supports, hangers, guides, and anchors, complete, in accordance with these Specifications and the Contract Documents.

B. American Iron and Steel (AIS) requirement applies to this Section. All iron and steel products used in this project must be produced in the United States.

1.02 SUBMITTALS

A. Submittals shall be in accordance with Section 01 3300 – Submittal Procedures.

B. Shop Drawings shall include the following information:
   1. Drawings of pipe supports, hangers, anchors, and guides
   2. Calculations for special supports and anchors.

PART 2 - PRODUCTS

2.01 GENERAL REQUIREMENTS

A. Code Compliance: All piping systems and pipe connections to equipment shall be properly anchored and supported to prevent undue deflection, vibration, dislocation due to line pressures, and stresses on piping, equipment, and structures. All supports and parts thereof shall conform to the requirements of ANSI/ASME B31.1 - Power Piping, except as supplemented or modified in the tables within this Specification. Supports for plumbing piping shall be in accordance with the latest edition of the applicable plumbing code or local administration requirements.

B. Structural Members: Wherever possible, pipes shall be supported from structural members. Where it is necessary to frame structural members between existing members, such supplementary members shall be provided. All supplementary members shall be in accordance with the requirements of the building code and the American Institute of Steel Construction.

C. Pipe Hangers: Pipe hangers shall be capable of supporting the pipe in all conditions of operation, allowing free expansion and contraction of the piping, and preventing excessive stress on equipment. All hangers shall have a means of vertical adjustment after erection. Hangers shall be designed to prevent becoming disengaged by any movement of the supported pipe. Hangers subject to shock or thrust imposed by the actuation of safety valves, shall include hydraulic shock suppressors. All hanger rods shall be subject to tensile loading only.

D. Hangers Subject to Horizontal Movements: At hanger locations where lateral or axial movement is anticipated, suitable linkage shall be provided to permit such movement. Where horizontal pipe movement is greater than 1/2-inch, or where the hanger rod deflection from the vertical is greater than 4 degrees from the cold to the hot position of the pipe, the hanger rod and structural attachment shall be offset in such a manner that the rod is vertical in the hot position.

E. Spring-Type Hangers: Spring-type pipe hangers shall be provided for piping subject to vibration or vertical expansion and contraction, such as engine exhausts and similar piping. All spring-type hangers shall be sized to the manufacturer's printed recommendations and the loading conditions encountered. Variable spring supports shall be provided with means to limit misalignment, buckling, eccentric loading, or to prevent overstressing of the spring, and with means to indicate at all times the

compression of the spring. Supports shall be capable of accommodating at least 4 times the maximum travel due to thermal expansion.

F. Thermal Expansion: Wherever expansion and contraction of piping is expected, a sufficient number of expansion loops or joints shall be provided, together with the necessary rolling or sliding supports, anchors, guides, pivots, and restraints permitting the piping to expand and contract freely in directions away from the anchored points. All components shall be structurally suitable to withstand all loads imposed.

G. Heat Transmission: Supports, hangers, anchors, and guides shall be so designed and insulated, that excessive heat will not be transmitted to the structure or to other equipment.

H. Riser Supports: Where practical, risers shall be supported on each floor with riser clamps and lugs, independent of the connected horizontal piping.

I. Freestanding Piping: Free-standing pipe connections to equipment such as chemical feeders and pumps shall be firmly attached to steel frames fabricated from angles, channels, or I-beams anchored to the structure. Exterior, free-standing overhead piping shall be supported on fabricated pipe stands consisting of pipe columns anchored to concrete footings, with horizontal, welded steel angles and U-bolts or clamps securing the pipes.

J. Materials of Construction:
   1. General: All pipe support assemblies, including framing, hardware, and anchors, shall be steel construction, galvanized after fabrication, unless otherwise indicated.
   2. Submerged Supports: All submerged piping, as well as piping, conduits, and equipment in hydraulic structures within 24 inches of the water level, shall be supported with support, assemblies, including framing, hardware, constructed of Type 304 stainless steel, unless otherwise indicated. All bolts and nuts shall be 316 stainless steel conforming to ASTM A193, Grade B8M, for bolts and ASTM A194, Grade 8M, for nuts.

K. Point Loads: Any meters, valves, heavy equipment, and other point loads on PVC, FRP, and other plastic pipes, shall be supported on both sides, according to manufacturer's recommendations to avoid undue pipe stresses and failures. To avoid point loads, all supports on PVC, FRP, and other plastic piping shall be equipped with extra wide pipe saddles or galvanized steel shields.

L. Noise Reduction: To reduce transmission of noise in piping systems, all copper tubes in buildings and structures shall be wrapped with a 2-inch-wide strip of rubber fabric or similar, suitable material at each pipe support, bracket, clip, or hanger.

2.02 SUPPORT SPACING

A. Supports for piping with the longitudinal axis in approximately a horizontal position shall be spaced to prevent excessive sag, bending, and shear stresses in the piping, with special consideration given where components such as flanges and valves impose concentrated loads. Pipe support spacing shall not exceed the maximum spans in the tables on the following pages. For temperatures other than ambient temperatures, or those listed, and for other piping materials or wall thicknesses, the pipe support spacings shall be modified in accordance with the pipe manufacturer's recommendations. Vertical supports shall be provided to prevent the pipe from being overstressed from the combination of all loading effects.

1. Support Spacing for Schedule 40 and Schedule 80 Steel Pipe:

Normal Pipe Diameter (inches)	Maximum Span (feet)
1/2	6
3/4 and 1	8
1 1/4 to 2	10
3	12
4	14
6	17
8 and 10	19
12 and 14	23
16 and 18	25
20 and greater	30

2. Support Spacing for Welded Fabricated Steel Pipe:
The support spacing shall be designed so that the stress on the pipe does not exceed 5,000 psi. Maximum deflection of pipe shall be limited to 1/360th of the span and shall be calculated by using the formula:

$$L = (7500tD/(32t+D))1/2$$

where:

t=Thickness (inches)
D=Diameter (inches)
L=Maximum span (feet)

3. Support Spacing for Ductile-Iron Pipe:

Normal Pipe Diameter (inches)	Maximum Span (feet)
All diameters	Two supports per pipe length or 10 feet (one of the 2 supports located at joint)

4. Support Spacing for Copper Tubing:

Normal Pipe Diameter (inches)	Maximum Span (feet)
1/2 to 1 1/2	6
2 to 4	10
6 and greater	12

5. Support Spacing for Schedule 40 or 80 PVC Pipe:

Normal Pipe Diameter (inches)	Maximum Span (at 100°F) (feet)
1/2	4
3/4	4
1	5
1 1/4	5
1 1/2	5
2	6
3	7
4	8
6	10
8	11
10	12
12	13

2.03 MANUFACTURED SUPPORTS

A. Stock Parts: Where not specifically indicated, designs which are generally accepted as exemplifying good engineering practice and use stock or production parts, shall be utilized wherever possible. Such parts shall be locally available, new, of best commercial quality, designed and rated for the intended purpose.

B. Manufacturers, or ENGINEER-approved equal:
   1. TOLCO Inc.
   2. Bergen-Paterson Pipesupport Corp., Woburn, MA
   3. Grinnell Corp. (Supply Sales Company), Cranston, RI
   4. NPS Products, Inc., Westborough, MA
   5. Power Piping Company, Pittsburgh, PA
   6. ZSI

2.04 COATING

A. Galvanizing: Unless otherwise indicated, all fabricated pipe supports other than stainless steel or non-ferrous supports shall be blast-cleaned after fabrication and hot-dip galvanized in accordance with ASTM A123 - Specifications for Zinc (Hot-Dip Galvanized) Coatings on Iron and Steel Products.

B. Other Coatings: Other than stainless steel or non-ferrous supports, all supports shall receive protective coatings in accordance with the requirements of applicable Sections in Division 09 – Finishes.

PART 3 - EXECUTION

3.01 INSTALLATION

A. General: All pipe supports, hangers, brackets, anchors, guides, and inserts shall be fabricated and installed in accordance with the manufacturer's printed instructions and ANSI/ASME B31.1 - Power Piping. All concrete inserts for pipe hangers and supports shall be coordinated with the formwork.

B. Appearance: Pipe supports and hangers shall be positioned to produce an orderly, neat piping system. All hanger rods shall be vertical, without offsets, unless noted otherwise. Hangers shall be adjusted to line up groups of pipes at the proper grade for drainage and venting, as close to ceilings or roofs as possible, without interference with other work.

3.02 FABRICATION

A. Quality Control: Pipe hangers and supports shall be fabricated and installed by experienced welders and fitters, using the best welding procedures available. Fabricated supports shall be neat in appearance without sharp corners, burrs, and edges.

END OF SECTION

SECTION 22 1000 – PLUMBING PIPING

PART 1 - GENERAL

1.01 THE REQUIREMENT

A. Furnish all drainage and vent piping, cleanouts and access panels, floor drains, hot and cold water piping, valves, piping specialties and appurtenances, supports and anchors, and plumbing and piping insulation in accordance with the Contract Documents.

B. American Iron and Steel (AIS) requirement applies to this section. All iron and steel products used in this project must be produced in the United States.

1.02 SUBMITTALS

A. Furnish submittals in accordance with Section 01 3300 – Submittal Procedures.

B. Product data to be submitted:
   1. Materials list of items proposed to be provided under this Section.
   2. Manufacturer's specifications, catalog cuts, and other data needed to prove compliance with the specified requirements.
   3. Shop Drawings and other data as required indicating method of installing and attaching equipment, except where such details are fully shown on the Drawings.

C. Sterilization Certificate: Upon completion of water line sterilization, deliver to the ENGINEER two copies of an acceptable "Certificate of Performance" for that activity.

D. Cathodic Protection:
   1. Upon completion of the work of this Section, deliver to the ENGINEER sufficient data to prove that wrapping of steel piping has been tested and meets the specified requirements.
   2. Show date of inspection, voltages used, and name and address of the inspector.

1.03 QUALITY ASSURANCE

A. Use adequate numbers of skilled workmen who are thoroughly trained and experience in the necessary crafts and who are completely familiar with the specified requirements and the methods needed for proper performance of the work of this Section.

B. Codes and Regulations:
   1. In additions to complying with the specified requirements, comply with pertinent regulations of governmental agencies having jurisdiction.
   2. In the event of conflict between or among specified requirements and pertinent regulations, the more stringent requirement will govern when so directed by the Engineer.
   3. Plumbing Code Compliance: Comply with applicable portions of the Uniform Plumbing Code pertaining to selection and installation of plumbing materials and products.

PART 2 - MATERIALS

2.01 PIPE MATERIALS

A. Provide pipes and pipe fittings complying with these Specifications and in accordance with the following listings:

B. Cast Iron Soil Pipe and Fittings:
   1. Service weight cast iron conforming to ASTM A74, hubless type, asphaltic coated.
   2. Joints shall be made with cast iron mechanical couplings or stainless-steel sleeves with neoprene gaskets.

C. Galvanized or Black Steel Pipe:
   1. 3 inches and Smaller – ASTM A120. Schedule 40, black or hot-dipped galvanized, welded, or seamless steel pipe, threaded or coupled.
   2. 4 inches and Larger – ASTM A53. Grade A or B, Schedule 40, black or hot dipped galvanized, welded, or seamless steel pipe, threaded.
   3. Fittings: FS WW-P521, 150 psi, malleable iron. Black or hot dipped galvanized ASTM A153.
   4. Unions: FS WW-U-531, Type B, black or hot dipped galvanized, Class 2, 250 psi, malleable iron, ground joint and brass seat.
   5. Sealing Paste or Tape: Teflon.
   6. Corrosion Protective Wrap: Polyvinyl chloride or Polyethylene pressure sensitive tape, 20-mil nominal thickness (one layer 20 mil or two layers 10 mil).
   7. Primer: 3M “Scotchwrap Pipe Primer.”

D. Copper Pipe and Fittings:
   1. Pipe: Underground, ANSI/ASTM B88, Type K, hard temper, seamless water tube.
   2. Fittings: ANSI/ASME B16.22. wrought copper or brass solder-joint fittings.
   3. Solder: Lead-free, silver tin-antimony solder 95-5, or tin-silver solder 96.5-3.5, 95.5, or 94-6, with mildly corrosive liquid or petroleum-based past flux containing chlorides of zinc and ammonium.

E. ABS: (Acrylonitrile Butadiene Styrene) plastic, drain, waste and vent pipe.
   1. Pipe and Fittings: ASTM D2661; ASTM F628; CSA B181.1.
   2. Solvent Cement: As recommended by the pipe manufacturer.

F. Polypropylene Drain, Waste and Vent Pipe:
   1. Flame retardant polypropylene material conforming to ASTM D2146 and flammability based on ASTM D635.
   2. Pipe shall be produced to Schedule 40 Iron Pipe size dimensional standards, including wall
   3. Fitting design shall be based upon the laying length dimensions in ANSI B16-12 for case iron screwed drainage fittings. Fitting wall thicknesses shall be measured in accordance with ASTM D2122, Section 4, and interval diameters shall be measured in accordance with ASTM D2122, Section 7.
   4. In concealed locations, joints shall be made by the electrical fusion method. In exposed or easily accessible locations, mechanical joint polypropylene fittings and joints may be used.
   5. Pipe and fittings shall be GSR Fuseal, manufactured by R & G Sloane Co., or ENGINEER-approved equal.

G. Polyvinyl Chloride (PVC):
   1. General: PVC materials for pipe and fittings shall conform to ASTM D1784, Cell Classification 12454-B. Pipe and fitting materials shall be specially formulated with sufficient UV protection additives to provide for long term outdoor exposure with no deleterious effects. Flanges shall be one-piece solid design or two-part van stone type which utilize the tapered, serrated face and full face gasket technique for joining and are compatible with ANSIN16.5 Class 150 metal flanges. Unions shall be the O-ring type having interchangeable components with true union valves for maximum system versatility.
   2. Schedule 40, 80, and 120: Pipe in accordance with ASTM D1785. Schedule 80 PVC socket type fittings shall conform to ASTM D2467. Schedule 40 PVC fittings shall conform to ASTM D2466. PVC solvent weld cement for socket connections shall meet the requirement of ASTM D2564/ Schedule 80 PVC threaded fittings shall conform to ASTM D2464.

2.02 TRENCH DRAINS

A. Trench Drain Channels:
   1. Trench drain channels shall be made of cast iron. All channels shall interlock with tongue and groove connections with adjoining channels. Each channel shall have horizontal anchoring ribs to mechanically lock the channel into the floor slab or pavement.
   2. Channels shall have available vertical cut outs for 4-inch or 6-inch discharge and available 4-inch or 6-inch horizontal outlet end caps. Channels shall have a built-in bottom slope of 0.6 percent.

B. Channel Grates: Channel grates shall be for heavy duty service made of Vinylester FRP or ENGINEER-approved equal. Grates should be securely locked down with built-in channel lock blocks. Locking mechanism shall be designed so as to provide an obstruction-free trench for maintenance and cleaning as well as to prevent concrete from entering channels during installation. FRP gates should comply with the Contract Documents.

C. Catch Basins: Catch basins shall be pre-cast polymer concrete with FRP grates. Any trench drains entering catch basins shall interlock fully with tongue and groove connections.

D. Joint Sealers: To prevent leakage, joints between channels, catch basin connections, etc., shall be sealed with an adhesive recommended by the manufacturer.

E. Manufacturers: Trench drains shall be as manufactured by Neenah Foundry; or ENGINEER-approved equal.

2.03 PIPE HANGERS

A. Water Piping:
   1. Split ring hangers with supporting rods, Grinnel Fig. 108; Elcen Fig. 10, or ENGINEER-approved equal.
   2. Semco “trisolators” or ENGINEER-approved equal.
   3. Channel mounted clamping system, Cush-A-Clamp per ZSI, or ENGINEER-approved equal.

B. Soil and Waste Piping:
   1. Variable ring hangers with supporting rods, Grinnel Fig. 108; Elcen 10, or ENGINEER-approved equal.
   2. Riser clamps at each floor and as required, Grinnell Fig. 261; Elcen Fig. 39 or ENGINEER-approved equal.
   3. Channel mounted clamping system, Cush-A-Clamp per ZSI, or ENGINEER-approved equal.

C. Gas Piping: Split ring hangers with supporting rods, Grinnel Fig. 108; Elcen Fig. 10, or ENGINEER-approved equal.

2.04 PIPE INSULATION

A. Hot and Cold Water (Exposed to Freezing Conditions): Molded fiberglass insulation jacketed with PVC jacketing. Provide.016 mil embossed aluminum weather protective jacket for outdoor application. Insulation 2-inch thick for pipe sizes less than 6-inch. Flame spread rating of 25 or less and smoke developed ratings of 50 or less per ASTM E84-89a. Manville “Micro-Lok AP”; Owens/Corning Fiberglass “SSL-11,” or ENGINEER-approved equal.

2.05 VALVES: Valves: Isolation valves shall be bronze valves with ends to suit pipe. Valves shall be rated for a working pressure of 150 psi.

A. Bronze Ball Valve: Two-Piece, Full-Port, Bronze Ball Valves with Bronze Trim
   1. Manufacturers: Subject to compliance with requirements, provide products by one of the following or ENGINEER-approved equal:
      a. American Valve, Inc.
      b. Conbraco Industries, Inc.; Apollo Valves
      c. Hammond Valve
      d. Milwaukee Valve Company
      e. Watts Regulator Co.; a division of Watts Water Technologies, Inc.
   2. Description:
      a. Standard: MSS SP-110.
      b. SWP Rating: 150 psig (1035 kPa).
      c. CWP Rating: 600 psig (4140 kPa).
      d. Body Design: Two piece
      e. Body Material: Bronze
      f. Ends: Suit to pipe
      g. Seats: PTFE or TFE
      h. Stem: Bronze
      i. Ball: Chrome-plated brass
      j. Port: Full

B. Bronze Gate Valves: Class 150, Non-Rising Stem Bronze Gate Valves:
   1. Manufacturers: Subject to compliance with requirements, provide products by one of the following or ENGINEER-approved equal:
      a. Hammond Valve
      b. Milwaukee Valve Company
      c. Red-White Valve Corporation
      d. Watts Regulator Co.; a division of Watts Water Technologies, Inc.
      e. Conbraco Industries, Inc.; Apollo Valves
   2. Description:
      a. Standard: MSS SP-80, Type 1.
      b. CWP Rating: 300 psig (2070 kPa).
      c. Body Material: ASTM B62, bronze with integral seat and union-ring bonnet.
      d. Ends: Suit to pipe
      e. Stem: Bronze
      f. Disc: Solid wedge; bronze
      g. Packing: Asbestos-free
      h. Handwheel: Malleable iron (bronze, or aluminum).

2.06 OTHER MATERIALS

A. Provide other materials, not specifically described but required for a complete and proper installation, subject to the approval of the ENGINEER.

PART 3 - EXECUTION

3.01 SURFACE CONDITIONS

A. Examine the areas and conditions under which work of this Section will be performed. Correct conditions detrimental to timely and proper completion of the Work. Do not proceed until unsatisfactory conditions are connected.

3.02 PLUMBING SYSTEM LAYOUT

A. Lay out the plumbing system in careful coordination with the Drawings, determining proper elevations for all components of the system and using only the minimum number of bends to produce a satisfactorily functioning system.

B. Follow the general layout shown on the Drawings (where other work may interfere, consult with ENGINEER).

C. Lay out pipes to fall within partition, wall, or roof cavities, and to not require furring other than as shown on the Drawings.

3.03 TRENCHING AND BACKFILLING

A. Perform trenching and backfilling associated with the work of this Section in strict accordance with the provisions of applicable Sections of Division 31 – Earthwork.

B. Cut bottom of trenches to grade. Make trenches 12 inches wider than the greatest dimension of the pipe.

C. Bedding and Backfilling:
   1. Install piping promptly after trenching. Keep trenches open as short a time as practicable.
   2. Under the structures, install pipes on a 6-inch bed of damp sand. Backfill the bottom of slab with damp sand.
   3. Outside of the structures, install underground piping on a 6-inch bed of damp sand. Backfill to within 12-inch of finish grade with damp sand. Backfill remainder with native soil.
   4. Don not backfill until installation has been approved and until Project Record Documents have been properly annotated.

3.04 PIPE SCHEDULE: PIPE SIZES, SCHEDULE, AND MATERIAL TO BE INSTALLED PER DRAWINGS.

A. Interior and Exterior Water Piping and Compressed Air Piping:
   1. Pipe: Underground, ANSI/ASTM B88, Type K, hard temper, seamless copper water tube. Aboveground, ANSI/ASTM B88, Type L, hard drawn, seamless copper water tube.
   2. Fittings: ANSI/ASME B16.22, wrought copper or brass solder joint fittings.
   3. Solder: Lead-free, tin-antimony solder 95-5, or tin-silver solder 96.5-3.5, 95.5-5 or 94-6.

B. Above Ground Facility Drain Piping:
   1. Sizes 3-Inch and Smaller: PVC Schedule 40/80 or standard weight galvanized steel pipe, with black or galvanized cast iron fittings, drainage pattern and screwed joints, or provide service weight cast iron soil pipe and fittings.
   2. Sizes 4-Inch and Smaller: PVC Schedule 40/80 or service weight cast iron soil pipe, conforming to ASTM A74, hubless cast iron soil pipe fittings with cast iron mechanical couplings or stainless-steel sleeves with stainless steel bands and neoprene gaskets.

C. Above Ground Chemical Waste Piping: Schedule 40 flame retardant polypropylene, GSR Fuseal, or ENGINEER-approved equal, with electrical-resistance fusion joints and fittings, except that mechanical joints may be used in exposed or easily accessible location.

D. Vent Piping:
   1. Above Ground: Sizes 2-½ inches and smaller; Schedule 40 PVC or galvanized steel pipe ASTM A53, welded or seamless, with black or galvanized cast iron drainage fittings. Pipe sizes 3 inches or larger: PVC or Cast-iron soil pipe and fittings as specified above.
   2. Underground: PVC or Cast-iron soil pipes and fittings.

E. Underground Facility Drain Piping: Schedule 40/80 PVC or service weight cast iron soil pipe: Conforming to ASTM A74, bell and spigot cast iron soil pipe and cast iron bell and spigot fittings or hubless cast iron pipe with cast iron mechanical couplings or stainless steel sleeves with stainless steel bands and neoprene gaskets.

F. Underground Chemical Waste Piping: Schedule 40 flame retardant polypropylene pipe with electrical-resistance fusion joints, as specified above.

G. Facility Distribution Gas Piping: Schedule 40 black steel pipe with malleable iron threaded fittings.

3.05 INSTALLATION OF PIPING

A. General:
   1. Proceed as rapidly as the facility construction will permit.
   2. Thoroughly clean items before installation. Cap pipe openings to exclude dirt until fixtures are installed and final connections have been made.
   3. Cut pipe accurately and work into place without springing of forcing, properly clearing windows, doors, and other openings. Excessive cutting or other weakening of the structures will not be permitted.
   4. Remove cutting and threading burrs before assembling piping.
   5. Do not install defective piping of fittings. Do not use pipe with threads which are chipped, stripped, or damaged.
   6. Shoe no tool marks or threads on exposed plated, polished, or enameled connections from fixtures. Tape all finished surfaces to prevent damage during construction.
   7. Make changes in directions with fittings; make changes in main sizes with eccentric reducing fittings. Unless otherwise noted, install water supply and return piping with straight side of eccentric fittings at top of the pipe.
   8. Run horizontal sanitary and storm drainage piping at uniform grade of ¼-inch per foot, unless otherwise noted. Run horizontal water piping with an adequate pitch upwards in direction of flow to allow complete drainage.
   9. Provide sufficient swing joint, ball joints, expansion loops, and devices necessary for a flexible pipeline system, whether or not shown on the Drawings.
   10. Support piping independently at pumps, coils, tanks, and similar locations, so that weight of pipe will not be supported by the equipment.
   11. Pipe the drains from pump glands, drip pans, relief valves, air vents, and similar locations, to spill over an open sight drain, floor drain, or other acceptable discharge point, and terminate with a plain and unthreaded pipe 6 inches above the drain.
   12. Securely bolt all equipment, isolators, hangers, and similar items in place.
   13. Support each item independently from other pipes. Do not use wire for hanging or strapping pipes.
   14. Provide complete dielectric isolation between ferrous and non-ferrous metals.
   15. Provide union and shut off valves suitable located to facilitate maintenance and removal of equipment and apparatus.

B. Trapping and Venting of Fixtures:
   1. Trap and vent all plumbing fixtures in accordance with Uniform Plumbing Code adopted by the Western Plumbing Officials Association and local plumbing codes, whether or not shown on the Drawings. Strictly adhere to any local codes. Only exceptions to the above will be those fixtures which are especially noted herein or on the Drawings to be provided with special wastes.
   2. No vent shall intersect another vent at a point less than 6 inches above extreme overflow level of highest fixture served.
   3. Take vents off top half of horizontal runs and grade so as to free vents quickly of any water or condensation.

C. Installation of Compressed Air Piping: Run compressed air piping with pitch as shown, without pockets. Provide glove valve drips at low points. All branches shall be taken off tip of mains.

D. Equipment Access:
   1. Install piping, equipment, and accessories to permit access for maintenance. Relocate items as necessary to provide such access, and without additional cost to the Owner.
   2. Provide access doors where valves, motors, or equipment requiring access to maintenance are located in walls or chases or above ceilings. Coordinate location of access doors with other trades as required.

3.06 PIPE JOINTS

A. Copper Tubing
   1. Cut square, ream cut end and remove burrs, and clean inside of female fitting to a bright finish.
      a. Apply solder flux with brush to tubing.
      b. Apply flux to fitting socket.
      c. Remove internal parts of solder-end valves prior to soldering.
      d. Assemble.
      e. Remove excess flux.
      f. Apply heat and solder. Allow joint to cool.
   2. Provide dielectric unions at points of connection of copper tubing to ferrous piping and equipment.

B. Screwed Piping:
   1. Deburr cuts
      a. Do not ream exceeding internal diameter of the pipe.
      b. Thread to requirements of ANSI B2.1.
   2. Use Teflon tape on male thread prior to cleaning for air and oil piping.

C. Leaky Joints:
   1. Remake with new material.
   2. Remove leaky section and/or fitting as directed.
   3. Do not use thread cement or sealant to tighten joint.

3.07 INSTALLATION OF POLYPROPYLENE AND PVC PIPING

A. Install in strict accordance with the pipe manufacturer’s directions.

3.08 PIPE SUPPORTS

A. Support suspended piping with clevis or trapeze hangers and rods.

B. Space hangers and support for horizontal steel pipes according to the following schedule:

Pipe Size	Maximum Spacing on Centers
1 ¼” and smaller	8’–0”
1 ½” to 3”	10’-0”
4” to 5”	14’-0”

C. Space hangers and supports for horizontal copper tubing according to the following schedule:

Tube Size	Maximum Spacing on Centers
1” and smaller	6’-0”
1 1/2"	7’-0”
2"	8’-0”
2 1/2"	9’-0”
3” and larger	10’-0”

D. Provide sway bracing on hangers longer than 18 inches.

E. Support vertical piping with riser clamps secured to the piping and resting on the structures. Provide at each floor unless otherwise noted.

F. Provide insulation continuous through hangers and rollers. Protect insulation by galvanized steel shields.

G. Arrange pipe supports to prevent excessive deflection, and to avoid excessive bending stress.

H. Support piping from inserts or anchors in concrete slabs. Where practical, provide the inserts under this Section and arrange for the placing per the applicable Sections of Division 03 – Concrete.

I. Hubless Piping:
   1. Provide hangers on the piping at each side of, and within 6 inches of, hubless pipe coupling so the coupling will bear no weight.
   2. Do not provide hangers on couplings.
   3. Provide hangers adequate to maintain alignment and to prevent sagging of the pipe.
   4. Make adequate provision to prevent shearing and twisting of the pipe and the joint.

3.09 SLEEVES AND OPENINGS

A. Provide sleeves in place before concrete is placed.
   1. Set pipe sleeves in place before concrete is placed.
   2. For un-insulated pipe, provide sleeves two pipe sizes larger than the pipe passing through, or provide a minimum of ½-inch clearance between inside and outside of the pipe.
   3. For insulated pipe, provide sleeves of adequate size to accommodate the full thickness of pipe covering, with clearance for packing and caulking.

B. Caulk the space between the sleeve and pipe or pipe covering, using a noncombustible, permanently plastic, waterproof, non-staining compound which leaves a smooth finished appearance, or pack with noncombustible fiberglass packing or fiberglass rope to within ½-incn of both wall faces, and provide the waterproof compound described above.

C. Finish and Escutcheons:
   1. Smooth rough edges around sleeves with plaster or spackling compound.
   2. Provide 1-inch-wide chrome or nickel-plated escutcheons on all pipes exposed to view where passing through walls, floors, partitions, ceiling, and similar locations.
      a. Size the escutcheons to fit pipe and covering.
      b. Hold escutcheons in place with set screw.

3.10 VALVES

A. Provide valves in water, air, and gas systems. Locate and arrange so as to give complete regulation of apparatus, equipment, and fixture.

B. Provide valves in at least the following locations:
   1. In branches and/or headers of water piping serving a group of fixtures.
   2. On both sides of apparatus and equipment.
   3. For shutoff of risers and branch mains.
   4. For flushing and sterilizing the system.
   5. Where shown on Drawings.

C. Locate valves for easy accessibility and maintenance.

3.11 CONCRETE

A. Provide concreted required for the work of this Section in strict accordance with pertinent provisions of Division 03 – Concrete.

3.12 DISINFECTION OF WATER SYSTEMS

1. Disinfect water systems in accordance with these Specifications.
2. Perform disinfection under the Engineer's observation. Notify the ENGINEER at least 48 hours prior to start of the disinfection process.
3. Upon completion of disinfecting, secure and submit the Certificate of Performance required under Article 1.04 of this Section, stating system capacity, disinfectant used, time and rate of disinfectant applied and resultant residuals in ppm at completion.
4. Use disinfectant method approved by the ENGINEER.

3.13 OTHER TESTING AND ADJUSTING

A. Provide personnel and equipment, and arrange for and pay the costs of all required tests and inspections required by governmental agencies having jurisdictions.

B. Where tests show materials or workmanship to be deficient, replace or repair as necessary, and repeat the tests until the specified standards are achieved.

C. Adjust the system to optimum standards of operations.

END OF SECTION

SECTION 23 0000 – VENTILATING, HEATING AND AIR CONDITIONING

PART 1 – GENERAL

1.01 THE REQUIREMENT

A. Provide ventilating, heating, and air conditioning systems, complete and operable, in accordance with the Contract Documents.

1.02 REFERENCE SPECIFICATIONS, CODES, AND STANDARDS

A. All work and materials shall be in full accordance with the latest rules and regulations or publications of the Health and Safety Rules (Air Conditioning Systems), the local Plumbing Code, the local Building Code, and all other local codes. Nothing in the Contract Documents shall be construed to permit work in violation of the above codes, rules, and regulations. In the absence of applicable codes, the installation and workmanship shall follow the standards set by the American Society of Heating, Refrigeration and Air Conditioning.

1.03 SUBMITTALS

A. Shop Drawings: Shop drawings shall be submitted in accordance with Section 01 3300 – Submittal Procedures.

B. Equipment Numbers: Equipment is identified by assigned numbers for reference and location purposes in the Contract Documents. The appropriate equipment numbers shall be included on the Shop Drawings and on other submittals.

1.04 WARRANTY

A. Air conditioners, and all fans and blowers, shall carry the manufacturer's standard warranty, and all such warranties shall be furnished upon final acceptance of the completed systems. All reciprocating refrigerant compressors shall carry a 5-year warranty by the manufacturers.

PART 2 – PRODUCTS

2.01 GENERAL

A. Quality: All mechanisms or parts shall be amply proportioned for the stresses which may occur during operation or for any other stresses which may occur during fabrication and erection. Individual parts that are alike in all units shall be alike in workmanship, design, and materials and shall be of the manufacturer's top line, industrial-commercial grade.

B. Supports: All equipment and appurtenances shall be firmly anchored or connected to supporting members. All supports required for the proper installation of the equipment, but not forming an integral part of the building structure, shall be provided by the heating and ventilating subcontractor, unless otherwise indicated. Equipment shall be supported on restrained spring-type vibration isolators.

C. Noise/Vibration Control: The system shall be free of any objectionable vibrations and noise. Flexible connections shall be provided in all ducts and piping connections to fans, compressors, and any other vibrating equipment.

D. Electric Motors: Electric motors shall be provided in accordance with Division 26 – Electrical.

2.02 DUCTWORK AND MISCELLANEOUS ACCESSORIES

A. Construction: Sheet metal ducts and plenums shall be constructed with airtight joints and seams in accordance with ASHRAE standards and SMACNA Duct Construction Manual. All joints on concealed ducts shall be taped with pressureless tape and adhesive, except

welded or soldered joints. Ductwork materials shall be galvanized steel or aluminum, unless otherwise indicated. Minimum duct gauges required are as follows:

Maximum Dimension of Duct (inches)	Galvanized Steel U.S Standard Gauge	Aluminum B and S Gauge
12 and less	26	24
13 through 30	24	22
31 through 54	22	20
55 through 84	20	18

B. Supports: Supports for horizontal ducts and plenums shall be galvanized steel angles with hanger rods. Supports for vertical ducts shall be band iron strap or angle bracket type. Inlet ducts shall be amply braced to withstand maximum negative pressure.

C. Insulation: The exterior of all ductwork inside of buildings downstream of air conditioning or heating units, other than ducts located in air conditioned spaces, shall be insulated with 2-inch thick flexible glass fiber insulation with a UL-labeled vapor barrier. All joints shall be taped to provide a continuous vapor seal. The insulation shall be attached to the ducts with adhesive applied in a 50 percent coverage. Insulation also shall be secured to the bottom of rectangular ducts over 24 inches wide with mechanical fasteners spaced 12 inches on centers. Ductwork to be internally lined will not require exterior insulation.

D. Lining: The interior of supply and return ducts and plenums within 10-feet distance from fans and all ductwork exposed to the weather shall be lined. Duct lining shall be 1-inch-thick fiberglass fastened to the inside of the ducts. Fastening shall be 100 percent coverage adhesive and mechanical fasteners 12 inches on center in both directions starting approximately 6 inches from ends of insulation. All exposed edges, ends, and rough surfaces shall be painted with adhesive or taped with 3-inch canvas tape dipped in adhesive.

E. Bird Screens: Removable bird screens shall be provided on all outside air intakes and exhaust air discharges to outside air. Screens shall be secured in frames of same metal as screens. Bird screens shall be ½-inch mesh stainless steel by 14-gauge.

F. Flexible Connectors: Flexible duct connections shall be made with banded or flanged 8-oz canvas, or reinforced plastic, or equal at each point where a blower unit is connected to a duct. A minimum clearance of 3 inches between the duct and source of vibration shall be maintained.

G. Diffusers, Grilles, and Registers: All supply air registers and diffusers, return air, and exhaust grilles shall be constructed with smooth corners, flanges, and sponge rubber gaskets and material as noted on the Diffuser Schedule in the Contract Documents. All supply and return air registers and diffusers shall have individually variable blades and volume control dampers as indicated. All ceiling or duct-mounted outlets shall be off-white. Wall-mounted outlets shall be factory prime-coated. Terminals shall be Titus; Metalaire; Krueger; or ENGINEER-approved equal.

H. Acoustic Louvers: Acoustic louvers shall be provided as indicated. Acoustic louvers shall have a minimum noise reduction of 14 dB at octave band No. 3. The CONTRACTOR shall submit certified data from a laboratory substantiating the acoustical performance. Static pressure drop shall not exceed 0.100 inches W.C. at 750 fpm.

I. Acoustic louvers shall be of galvanized formed steel construction with air foil blades. Frame and blade face shall be of 16 and 18-gauge, respectively. Air-side blades shall have perforations, and blades shall be packed with 3.5 lb. density fiber glass or with inert, vermin-and moisture-proof mineral fiber for better acoustical performance. Louvers shall be flush with exterior wall, with mounting frames caulked to provide weather-tight

connections. All protruding inside edges shall be provided with smooth moldings. Acoustic louvers shall be Ruskin, Industrial Acoustics Company; or ENGINEER-approved equal. Coat louvers in accordance with these Specifications.

J. Turning Vanes: Square-turn elbows shall be fitted with shop-fabricated double-blade turning vanes mounted inside rails. Construction shall be of the same material as the duct work and be rigid enough to prevent vibration at high air flow.

K. Air Extractors: An air extractor shall be provided on each take-off from main supply duct adjacent to any diffuser, register, or grille where a splitter is not used. Air extractors shall be Carnes; Tuttle and Bailey or ENGINEER-approved equal. Extractors shall have synchronized steel curved blades, heavy side rails, and screw operator.

2.03 CONTROLS

A. General: All cooling, ventilating, and air conditioning equipment shall be provided with manual and automatic control systems as indicated. The exhaust fan shall be interlocked with the air conditioner to prevent fan operation while the A/C unit is operating. The exhaust fan shall be controlled from a HAND-OFF-AUTOMATIC switch and line-voltage cooling thermostat, wall-mounted. Individual exhaust fans shall have manual switches for single or 2-speed motors as indicated.

B. Thermostats: Room thermostats shall be of the modulating electric type, except where 2-position action is required. Thermostats shall be located in air-conditioned spaces and shall have a range of 40 to 100°F. All thermostats shall have exposed adjustment dials and a thermometer on the front face. Mounting height shall be 5 feet. An insulating back shall be provided where exterior wall mounting is shown. Guards shall be provided for room thermostats installed in areas other than administrative offices or control rooms.

C. Manufacturers: Control system components and thermostats shall be as manufactured by Honeywell; Johnson Controls Company; General Controls; or ENGINEER-approved equal.

2.04 PIPING

A. Piping in air conditioning systems shall be galvanized steel in accordance with these Specifications. Equipment drains shall be of Type "K" copper tube.

2.05 FANS

A. General: Location, type, capacity, and motor horsepower shall be as indicated. Fans shall be complete with motors, variable motor bases, variable drives, safety cages, belt guards, flexible connections to supply and/or suction ducts, vibration isolators, and necessary accessories. All fans shall be suitable for continuous operation.

B. Performance: Fans shall be guaranteed to deliver the quantities of standard air against the respective static pressure without deviating by more than 5 percent. Every fan wheel, regardless of size, shall be statically and dynamically balanced, and shall be free from objectionable vibration or noises.

2.06 VENTILATION FAN

A. Ventilation fan shall be remote mount, energy conserving type, with no less than 340 cfm as certified by the Home Ventilating Institute (HVI) at 0.2” static pressure in inches water gauge and no more than 1.7 sone as rated by manufacturer at 0.2” static pressure. Power consumption shall be no greater than 100 watts and energy efficiency rating shall be no less than 3.5 cfm/watt. Housing shall be insulated to reduce condensation. Duct diameter shall be no less than 6”. Fan shall be UL listed when used with GFCI branch circuit wiring. Brackets shall be provided for joist, truss, or suspension installations.

2.07 CENTRIFUGAL EXHAUST FAN

A. Exhaust fan shall be direct mounted, direct driven, propeller type. Fan blades shall be fabricated of aluminum. Propellers shall be statically and dynamically balanced in accordance with ACMA standard 204. Motors shall be continuous duty ball bearing design, permanently lubricated, heavy duty type, matched to the fan load and furnished at the specified RPM, voltage, phase, and enclosure. Motor drive frame assemblies and fan panels shall be epoxy painted steel. Drive frame assemblies shall be welded wire or formed channels and fan panels shall have pre-punched mounting holes, formed flanges, and a deep formed inlet venturi. Motor shall meet the requirements of Division 26. Fan shall be certified for air and sound performance in accordance with ACMA.

B. Performance: Fans shall be guaranteed to deliver the quantities of standard air against the respective static pressure without deviating by more than 5 percent. Every fan wheel, regardless of size, shall be statically and dynamically balanced, and shall be free from objectionable vibration or noises. Fan performances indicated in the schedule shall be minimum.

C. Isolation Damper: The dampers shall be positive seal, butterfly isolation type. The blade shall be constructed of aluminum or stainless steel depending on requirements. Blade seal shall occur when the gasket seats against the inside of the housing wall. The damper shall be all weld design. Manual actuator shall be 1/4" turn worm gear with handwheel.

D. Fan manufacturers shall be Dayton, Greenheck, Penn Ventilation or ENGINEER-approved equal. Damper manufacturers shall be Arrow, Ruskin or ENGINEER-approved equal.

2.08 AIR CONDITIONER

A. Air conditioning unit shall be of the packaged, rooftop design as indicated. All air conditioning units shall have direct expansion coils and, where indicated, gas or electric heaters; filter compartments with access door and industrial type disposable filters mounted on steel frames; mixing boxes with return air, fresh air and relief dampers; mounting frame or curb and restrained spring-type vibration isolators. All units shall be controlled from cooling room-thermostats. Unless otherwise indicated, motorized dampers shall be controlled from outside air thermostats. All outdoor air conditioners shall have heavy galvanized or prime-coated steel cabinets of weather resistant design. All drain pans shall have galvanized steel or copper drain lines connected to the nearest floor sink or drain in accordance with the applicable Plumbing Code.

B. Air conditioners shall be as manufactured by Trane, Carrier, York, Lennox, or ENGINEER-approved equal.

2.09 FILTERS

A. All air handling units and air conditioners shall be provided with filter compartments. The filters shall be of the disposable, high efficiency, industrial type, set into galvanized mounting frames with fastening clips for easy removal.

PART 3 – EXECUTION

3.01 GENERAL

A. Roughing-In: It shall be ascertained that all inserts, chassis, shafts, and openings are correctly located; otherwise all new openings shall be cut at no additional expense.

B. Checking: Test and make tight all work, furnish all equipment necessary to carry out the tests and thoroughly clean the system before startup.

C. System Balancing: After completion of all required work, the system, as a whole, shall be checked and balanced. System balancing shall include the following:

1. Adjusting fans, dampers, diffusers, registers, valves, and other devices so that the quantities of air, water, and steam called for on the Drawings are supplied, returned, or exhausted.
2. Measuring and recording at least once the water and air temperatures delivered through each coil on full heating and full cooling: making all necessary adjustments to obtain the required conditions.
3. Measuring and recording current on each fan and motor, and checking for proper operation of all equipment.
4. Adjusting any variable blade registers to the correct setting to obtain the design conditions.

END OF SECTION

SECTION 26 0126 – MAINTENANCE TESTING OF ELECTRICAL SYSTEMS

PART 1 – GENERAL

1.01 SCOPE OF WORK

A. The CONTRACTOR shall provide testing as specified herein.

1.02 REFERENCES

A. The following is a list of standards which may be referenced in this section:

1. American National Standards Institute (ANSI):

450	Maintenance, Testing, and Replacement of Large lead Storage Batteries for Generator Stations and Substations.
C2	National Electric Safety Code.
C37.20.1	Metal-Enclosed Low Voltage Power Circuit Breaker Switchgear.
C37.20.2	Metal-Clad and Station-Type Cubicle Switchgear.
C37.20.3	Metal-Enclosed Interrupter Switchgear.
C62.33	Test Specifications for Varistor Surge Protective Devices.

2. American Society for Testing and Materials (ASTM):

D665	Rust Preventing Characteristics of Inhibited Mineral Oil in the Presence of Water
D877	Dielectric Breakdown Voltage of Insulating Liquids Using Disk Electrodes
D923	Sampling Electrical Insulating Liquids
D924	A-Class Characteristics and Relative Permittivity (Dielectric Constant) of Electrical Insulating Liquids
D971	Interfacial Tension of 0.1 Against Water by the Ring Method
D974	Acid and Base Number by Color-indicator Titration
D1298	Density, Relative Density (Specific Gravity), or API Gravity of Crude Petroleum and Liquid Petroleum Products by Hydrometer Method
D1500	ASTM Color of Petroleum Products
D1524	Visual Examination of Used Electrical Insulating Oils of Petroleum Origin in the Field
D1533	Water in Insulating Liquids
D1816	Dielectric Breakdown Voltage on Insulating Oils of Petroleum Origin Using VDE Electrodes
D2285	Interfacial Tension of Electrical Insulating Oils of Petroleum Origin Against Water by the Drop-Weight Method

3. Institute of Electrical and Electronics Engineers (IEEE):

43	Testing Insulating Resistance of Rotating Machinery
48	Test Procedures and Requirements for High-Voltage Alternating-Current Cable Terminators
81	Measuring Earth Resistivity, Ground Impedance, and Earth Surface Potentials of a Ground System
95	Insulation Testing of Large AC Rotating Machinery with High Direct Voltage
118	Test Code for Resistance Measurement
400	Making High-Direct-Voltage Tests on Power Cable Systems in the Field

4. National Electrical Manufacturers Association (NEMA):

AB 4 Inspection and Preventive Maintenance of Molded Case Circuit Breakers Used in Commercial and Industrial Applications
PB 2 Deadfront Distribution Switchboards
WC 7 Cross-Linked-Thermosetting-Polyethylene-Insulated Wire and Cable for the Transmission and Distribution of Electrical Energy.
WC 8 Ethylene-Propylene-Rubber-insulated Wire and Cable for the Transmission and Distribution of Electrical Energy.

5. International Electrical Testing Association (NETA) 1999: Acceptance Testing Specifications (ATS) for Electrical Power Distribution Equipment and Systems.
6. National Fire Protection Association (NFPA):

70 National Electrical Code (NEC).
70E Standard for Electrical Safety Requirements for Employee Workplaces.

1.03 SUBMITTALS

A. Products shall be submitted for review in accordance with these Specifications and the Contract Documents.

B. Administrative Submittals: Submit 30 days prior to performing inspections or tests:
1. Schedule for performing inspection and tests
   a. Include notification dates for special inspections.
2. List of references to be used for each test
3. Sample copy of equipment and materials inspection form(s)
4. Sample copy of individual device test form
5. Sample copy of individual system test form

C. Quality Control Submittals: Submit within 14 days after completion of test:
1. Test or inspection reports and certificates for each electrical item tested

D. Contract Closeout Submittals:
1. In accordance with Operation & Maintenance requirements specified elsewhere
2. After test of inspection reports and certificates have been reviewed by ENGINEER and returned, insert a copy of each in operation and maintenance manual.

1.04 QUALITY ASSURANCE

A. Testing Firm Qualifications:
1. Independent 3rd party organization functioning as an unbiased testing authority.
2. Professionally independent of manufacturers, suppliers, and installers, of electrical equipment and systems being tested.
3. Employer of engineers and technicians regularly engaged in testing and inspecting of electrical equipment, installations, and systems.
4. Supervising engineer accredited as Certified Electrical Test Technologist by National Institute for Certification of Engineering Technologists (NICET), or International Electrical Testing Association and having a minimum of 5 years testing experience on similar projects.
5. Technicians certified by NICET or NETA.
6. Assistants and apprentices assigned to project at ratio not to exceed two certified to one non-certified assistant or apprentice.
7. Registered Professional Engineer to provide comprehensive project report outlining services performed, results of such services, recommendations, actions taken, and opinions.

8. In compliance with OSHA Title 29, Part 1910.7 criteria for accreditation of testing laboratories.

B. Test equipment shall have an operating accuracy equal to, or greater than, requirements established by NETA ATS. Test instrument calibration shall be in accordance with NETA ATS.

1.05 SEQUENCING AND SCHEDULING

A. Perform inspection and electrical tests after equipment has been installed and certified by equipment manufacturer's representative.

B. Perform tests with apparatus de-energized whenever feasible.

C. Inspection and electrical tests on energized equipment are to be:
   1. Scheduled with OWNER and ENGINEER prior to de-energization.
   2. Minimized to avoid extended period of interruption to the operating equipment.

D. Notify OWNER and ENGINEER at least 72 hours prior to performing tests on energized electrical equipment.

PART 2 – PRODUCTS (NOT USED)

PART 3 – EXECUTION

3.01 GENERAL

A. Tests specified in this section are to be performed in accordance with the requirements of manufacturer's minimum recommendations, as identified herein, and as detailed in specific equipment specifications.

B. Tests and inspection shall establish that:
   1. Electrical equipment is operational within industry and manufacturer's tolerances.
   2. Installation operates as designed and intended by the equipment manufacturer.
   3. Equipment is suitable for energization.
   4. Installation conforms to requirements of Contract Documents and NFPA 70, NFPA 70E, and ANSI C2.

C. Perform inspection and testing in accordance with NETA ATS, industry standards, and manufacturer's recommendations.

D. Adjust mechanisms and moving parts for free mechanical movement.

E. Adjust adjustable relays and sensors to correspond to operating conditions, or as recommended by manufacturer.

F. Verify nameplate data for conformance to Contract Documents.

G. Realign and shim equipment not properly aligned and correct out of alignment, plumb, or level condition.

H. Properly anchor electrical equipment found to be inadequately anchored.

I. Tighten accessible bolted connections, including wiring connections, with calibrated torque wrench to manufacturer's recommendations, or as otherwise specified.

J. Clean contaminated surfaces with cleaning solvents as recommended by manufacturer.

K. Provide proper lubrication of applicable moving parts.

L. Inform OWNER of working clearances not in accordance with NFPA 70.

M. Investigate and repair or replace:
   1. Electrical items that fail tests.

2. Active components not operating in accordance with manufacturer's instructions.
3. Damaged electrical equipment.

3.02 ELECTRICAL ENCLOSURES

A. Remove foreign material and moisture from enclosure interior.

B. Vacuum and wipe clean enclosure interior.

C. Remove corrosion found on metal surfaces.

D. Repair or replace, as determined by OWNER, door and panel sections having dented surfaces.

E. Repair or replace, as determined by OWNER, poor fitting doors and panel sections.

F. Repair or replace improperly operating latching, locking, or interlocking devices.

G. Replace missing or damaged hardware.

H. Finish:
1. Provide matching paint and touch up scratches and mars.
2. If required due to extensive damage, as determined by OWNER, refinish the entire assembly.

I. Replace fuses and circuit breakers that do not conform to size and type required by the Contract Documents.

J. Grout, caulk, or seal around the base of enclosures to prevent the entrance of moisture, dust, and rodents.

3.03 DRY TYPE TRANSFORMERS

A. Visual and Mechanical inspection:
1. Physical and insulator damage
2. Proper winding connections
3. Bolt torque level in accordance with most recent publication of NETA ATS, unless otherwise specified by manufacturer.
4. Defective wiring
5. Removal of shipping brackets, fixtures, or bracing
6. Free and properly installed resilient mounts
7. Cleanliness and improper blockage of ventilation passages
8. Verify that tap-changer is set at correct ratio for rated output voltage under normal operating conditions.
9. Verify proper secondary voltage phase-to-phase and phase-to-ground after energization and prior to loading.

B. Electrical Tests:
1. Insulation Resistance Tests:
a. Applied megohmmeter in accordance with most recent publication of NETA ATS, for each:
1) Winding-to-winding
2) Winding-to-ground
b. 10-minute test duration with resistances tabulated at 30 seconds, 1 minute, and 10 minutes.
c. Results temperature corrected in accordance with most recent publication of NETA ATS.
d. Temperature corrected insulation resistance values equal to, or greater than, ohmic values established by manufacturer.

e. Insulation resistance test results to compare within 1 percent of adjacent windings.

2. Perform tests and adjustments for fans, controls, and alarm functions as suggested by manufacturer.

3.04 LOW VOLTAGE CABLES, 600 VOLTS MAXIMUM

A. Visual and Mechanical Inspection:

1. Inspect each individual exposed power cable No. 4 and larger for:
   a. Physical damage.
   b. Proper connections in accordance with Contract Drawings and approved submittals.
   c. Cable bends not in conformance with manufacturer's minimum allowable bending radius where applicable.
   d. Color coding conformance with NFPA 70 or specifications.
   e. Proper circuit identification.
2. Mechanical Connections For:
   a. Proper lug type for conductor material.
   b. Proper lug installation.
   c. Bolt torque level in accordance with most recent publication of NETA ATS, unless otherwise specified by manufacturer.
3. Shielded Instrumentation Cables (IC) for:
   a. Proper shield grounding.
   b. Proper terminations.
   c. Proper circuit identification.
4. Control Cables For:
   a. Proper termination.
   b. Proper circuit identification.
5. Cables Terminated Through Window Type CTs: Verify that neutrals and grounds are terminated for correct operation of protective devices.

B. Electrical Tests:

1. Insulation Resistance Tests:
   a. Applied megohmmeter in accordance with most recent publication of NETA ATS.
   b. Phase-to-phase and phase-to-ground for 1 minute on each pole.
   c. Insulation resistance values equal to, or greater than ohmic values established by manufacturer or listed in the most recent publication of NETA ATS.
2. Contact Resistance Tests:
   a. Contact resistance in microhms across each switch blade and fuse holder, 30 amps and larger.
   b. Investigate deviation of 50 percent or more form adjacent poles or similar switches.

3.05 MOLDED CASE CIRCUIT BREAKERS

A. General: Inspection and testing limited to circuit breakers rated 200 amperes and larger.

B. Visual and Mechanical Inspection:

1. Proper mounting
2. Proper conductor size
3. Feeder designation according to nameplate and one-line diagram
4. Cracked casings
5. Connection bolt torque level in accordance with the most recent publication of NETA ATS.

6. Operate frame size and trip setting with circuit breaker schedules or one-line diagram.
7. Compare frame size and trip setting with circuit breaker schedules or one-line diagram.
8. Verify that terminals are suitable for 75 degrees C rated insulated conductors.

C. Electrical Tests:
1. Insulation Resistance Tests:
   a. Utilize 1,000-volt megohmmeter for 480 and 600-volt circuit breakers.
   b. Pole-to-pole and pole-to-ground with breaker contacts opened for 1 minute
   c. Pole-to-pole and pole-to-ground with breaker contacts closed for 1 minute
   d. Test valves to comply with the most recent publication of NETA ATS.
2. Contact Resistance Tests:
   a. Contact resistance in microhms across each pole
   b. Investigate deviation of 50 percent or more from adjacent poles and similar breakers.
3. Primary Current Injection Test to Verify:
   a. Long-time minimum pickup and delay
   b. Short-time pickup and delay
   c. Ground fault pickup and delay
   d. Instantaneous pickup by run-up or pulse method
   e. Trip characteristics of adjustable trip breakers shall be within manufacturer's published time-current characteristic tolerance band, including adjustment factors
   f. Trip times shall be within limits established by the most recent publication of NEMA AB 4.
   g. Instantaneous pickup value shall be within values established by the most recent publication of NEMA AB 4.

3.06 INSTRUMENT TRANSFORMERS

A. Visual and Mechanical Inspection:
1. Visually Check Current, Potential, and Control Transformers For:
   a. Cracked insulation
   b. Broken leads or defective wiring
   c. Proper connections
   d. Adequate clearances between primary and secondary circuit wiring
2. Verify Mechanically that:
   a. Grounding and shorting connections have good contact.
   b. Withdrawal mechanism and grounding operation, when applicable, operate properly.
3. Insulation resistance measurement on instrument transformer shall not be less than that shown in the most recent publication of NETA ATS.

3.07 METERING

A. Visual and Mechanical Inspection:
1. Verify meter connections in accordance with appropriate diagrams.
2. Verify meter multipliers.
3. Verify that meter types and scales conform to Contract Documents.
4. Check calibration of meters at cardinal points.
5. Check calibration of electrical transducers.

3.08 GROUNDING SYSTEMS

A. Visual and Mechanical Inspection:
   1. Equipment and circuit grounds in motor control center and panelboard assemblies for proper connection and tightness.
   2. Ground bus connections in motor control center and panelboard assemblies for proper termination and tightness.
   3. Effective transformer core and equipment grounding.
   4. Accessible connections to grounding electrodes for proper fit and tightness.
   5. Accessible exothermic-weld grounding connections to verify that molds were fully filled and proper bonding was obtained.

3.09 AC INDUCTION MOTORS

A. General: Inspection and testing limited to motors rated 10 hp and larger.
B. Visual and Mechanical Inspection:
   1. Proper electrical and grounding connections.
   2. Shaft alignment.
   3. Blockage of ventilating air passageways.
   4. Operate Motor and Check for:
      a. Excessive mechanical and electrical noise.
      b. Overheating.
      c. Correct rotation.
      d. Check vibration detectors, resistance temperature detectors, or motor inherent protectors for function ability and proper operation.
      e. Excessive vibration.
   5. Check operation of space heaters.

C. Electrical Tests:
   1. Insulation Resistance Tests:
      a. In accordance with IEEE 43:
         1) Motors above 200 hp for 10-minute duration with resistances tabulated at 30 seconds, 1 minute, and 10 minutes.
         2) Motors 200 hp and less for 1-minute duration with resistances tabulated at 30 and 60 seconds.
   2. Insulation resistance values equal to, or greater than, ohmic values established by manufacturers.
   3. Calculate polarization index ratios for motors above 200 hp. Investigate index ratios less than 1.5 for Class A insulation and 2.0 for Class B insulation.
   4. Insulation resistance test on insulated bearings in accordance with manufacturer's instructions.
   5. Measure running current and voltage, and evaluate relative to load conditions and nameplate full-load amperes.
   6. Verify proper operation of motor moisture and winding temperature protection, and other ancillary devices.

3.10 MOTOR CONTROL CENTERS AND MOTOR CONTROLLERS

A. Visual and Mechanical Inspection:
   1. Proper barrier and shutter installation and operation.
   2. Proper operation of indicating and monitoring devices.
   3. Proper overload protection for each motor.
   4. Improper blockage of air-cooling passages.
   5. Proper operation of draw out elements.
   6. Integrity and contamination of insulation system.

7. Check door and device interlocking system by:
    a. Closure attempt of device when door is in OFF or OPEN position.
    b. Opening attempt of door when device is in ON or CLOSED position.
8. Check nameplates for proper identification of:
    a. Equipment title and tag number with latest Contract Drawings and approved submittals
    b. Pushbuttons
    c. Control switches
    d. Pilot lights
    e. Control relays
    f. Circuit breakers
    g. Indicating meters
9. Verify that fuse and circuit breaker sizes and types conform to Contract Documents.
10. Verify that current and potential transformer ratios conform to Contract Documents.
11. Check bus connections for high resistance by low resistance ohmmeter and calibrated torque wrench applied to bolted joints:
    a. Ohmic value to be zero
    b. Bolt torque level in accordance with the most recent publication of NETA ATS, unless otherwise specified by manufacturer.
12. Check operation and sequencing of electrical and mechanical interlock systems by:
    a. Closure attempt for locked open devices.
    b. Opening attempt for locked closed devices.
13. Verify performance of each control device and feature famished as part of the motor control center or motor controller.
14. Control Wiring:
    a. Compare wiring to local and remote control, and protective devices with elementary diagrams.
    b. Check for proper conductor lacing and bundling.
    c. Check for proper conductor identification.
    d. Check for proper conductor lugs and connections.
15. Exercise active components.
16. Inspect contactors for:
    a. Correct mechanical operations.
    b. Correct contact gap, wipe, alignment, and pressure.
    c. Correct torque of all connections.
16. Compare overload rating with full-load current for proper size.
17. Compare fuse, motor protector, and circuit breaker with motor characteristics for proper size.
18. Perform phasing check on double-ended motor control centers to ensure proper bus phasing from each source.

B. Electrical Tests:
1. Insulation Resistance Tests:
    a. Applied megohmmeter in accordance with the most recent publication of NETA ATS.
    b. Bus section phase-to-phase and phase-to-ground for 1 minute on each phase.
    c. Contactor phase-to-ground and across open contacts for 1 minute on each phase.
    d. Starter section phase-to-phase and phase-to-ground on each phase with starter contacts closed and protective devices open.
    e. Test values to comply with the most recent publication of NETA ATS.

2. Overpotential Tests:
    a. Maximum applied voltage in accordance with manufacturer's published values. If not available, in accordance with the most recent publication of NETA ATS.
    b. Phase-to-phase and phase-to-ground for 1 minute for each phase of each bus section.
    c. Test results evaluated on pass/fail basis.
3. Current Injection Through Overload Unit at 300 Percent of Motor Full-Load Current and Monitor Trip Time:
    a. Trip time in accordance with manufacturer's published data.
    b. Investigate values in excess of 120 seconds.
4. Control Wiring Tests:
    a. Apply secondary voltage to control power and potential circuits.
    b. Check voltage levels at each point on terminal boards and each device terminal.
    c. Insulation resistance test at 1,000 volts on control wiring except that connected to solid state components.
        1) Insulation resistance to be 1 megohm minimum.
5. Operational test by initiating control devices to affect proper operation.

3.11 LOW VOLTAGE SURGE ARRESTORS

A. Visual and Mechanical Inspection:
    1. Adequate clearances between arrestors and enclosures.
    2. Ground connections to ground bus.

B. Electrical Tests:
    1. Varistor Type Arresters:
        a. Clamping voltage test.
        b. Rated RMS voltage test.
        c. Rated voltage test.
        d. Varistor arrester test values in accordance with ANSI C62.33, Sections 4.4 and 4.7.

END OF SECTION

SECTION 26 0500 – COMMON WORK RESULTS FOR ELECTRICAL

PART 1 – GENERAL

1.01 SCOPE OF WORK

A. It is the intent of this part of the Contract Documents to cover the work and materials necessary for erecting a complete electrical system, tested and ready for continuous use. The system shall be constructed in accordance with the Contract Documents, and Federal, State, and Local codes and regulations.

1.02 RELATED WORK

A. The CONTRACTOR shall coordinate the work with other trades, and furnish and install the equipment in accordance with the manufacturers' requirements.

1.03 GENERAL PROVISIONS

A. Minimum sizes of equipment, and electrical devices, are indicated but it is not intended to show every offset and fitting, nor every structural or mechanical difficulty that will be encountered during the installation of the work.

B. Work indicated on the Plans is approximately to scale, but actual dimensions and detailed Plans should be followed as closely as field conditions permit. Field verification of scale dimensions on Plans is governed by field conditions. Installation of systems and equipment is subject to clarification as indicated in reviewed shop drawings and field coordination.

C. Discrepancies indicated on different Plans, between Plans and actual field conditions, or between Plans and Contract Documents shall be promptly brought to the attention of the ENGINEER for clarification, prior to purchasing and installing equipment.

D. The alignment of equipment and conduit shall be adjusted to accommodate architectural changes, or to avoid work of other trades, without extra expense to the OWNER.

E. The CONTRACTOR shall furnish and install the parts and pieces necessary to the installation of equipment, in accordance with the best practice of the trade, and in conformance with the requirements of these Contract Documents.

F. Items not specifically mentioned in these Contract Documents, or noted on the Plans, or indicated on reviewed shop drawings, but which are obviously necessary to make a complete working installation, shall be deemed to be included herein.

G. The CONTRACTOR shall lay out and install electrical work prior to placing floors and walls. Furnish and install sleeves and openings through floors and walls, required for installation of conduits. Sleeves shall be rigidly supported and suitably packed, or sealed, to prevent ingress of wet concrete. Spacers shall be installed in order to prevent conduit movement. Dimensions indicated for electrical equipment and their installation are restrictive dimensions.

H. The CONTRACTOR shall furnish and install inserts and hangers required to support conduits and other electrical equipment. If the inserts, hangers, sleeves, or other mounting hardware are improperly placed, or installed, the CONTRACTOR shall do necessary work, at their own expense, to rectify the errors.

I. Electrical equipment shall be capable of operating successfully at full-rated load, without failure, at an ambient air temperature of 60°C, and specifically rated for the altitude indicated on the Plans. Electrical equipment not rated for operation at that temperature shall be provided with air conditioning to meet the manufacturers' operating temperature.

J. If any contradictions, contrasts, non-homogeneity, or inconsistency appears, the stricter criteria noted and the collective requirements in any and all of the project documents shall apply.

K. The CONTRACTOR shall perform necessary saw cutting, core drilling, excavating, removal, shoring, backfilling, and other work required for the proper installation of conduits, whether inside, or outside of the buildings and structures. The CONTRACTOR shall repair and patch where demolition has taken place in a manner to match existing original structure.

1.04 REGULATIONS, CODES, AND STANDARDS

A. Electrical work, including connection to electrical equipment integral with mechanical equipment, shall be performed in accordance with the latest published regulations, codes, and standards, of the following:
   1. National Electrical Code (NEC)
   2. State and local codes
   3. Institute of Electrical and Electronic Engineers (IEEE)
   4. American National Standards Institute (ANSI)
   5. American Society for Testing and Materials (ASTM)
   6. Insulated Cable Engineers Association (ICEA)
   7. National Electrical Manufacturers Association (NEMA) Standards
   8. Federal Occupational Safety and Health Act (OSHA)
   9. National Fire Protection Association (NFPA)
   10. National Electrical Testing Association (NETA)

B. When applicable, the material used in the performance of the electrical work shall be listed by the Underwriters' Laboratories, Inc. (UL) for the class of service for which they are intended.

1.05 SUBMITTALS

A. It is the obligation of the CONTRACTOR to organize their work, so that a complete electrical, instrumentation, and control system for the facility will be provided, and will be supported by accurate shop and record drawings, and O&M manuals.

B. The CONTRACTOR shall submit detailed shop drawings and data prepared and organized by the suppliers. The quantity of submittal sets required shall be as specified in the Contract Documents.

C. The submittals shall be neatly grouped and organized by specification section number, and sub-section. Related information shall be highlighted, and the specific product shall be marked. All submittals shall be complete, and presented in one package. Incomplete submittals will be returned without review. If a portion of the project requires a fast track schedule, that portion may only be submitted earlier under a separate cover letter. The following shall be submitted to the ENGINEER and returned reviewed to the CONTRACTOR before fabrication is started.
   1. A complete list of the equipment and materials, including the manufacturer's name, product specification, descriptive data, technical literature, performance charts, catalog cuts, installation instructions, and spare part recommendations for each different item of the equipment specified. The above shall clearly show all the specified requirements as described in the Specifications including but not limited to specific UL and NEMA rating, technical capabilities, test result verifications, and acceptance letters.
   2. Drawings containing complete point to point wiring and schematic diagrams, control diagrams, and any other details required to demonstrate that the system has been coordinated and will operate as intended. Drawings for each panel, cabinet, or enclosure shall show a complete Bill of Materials, wire numbers for internal panel and field wiring, terminal block numbers, proposed internal layout with assembly details, anchoring, support, and appurtenances of equipment, and equipment relationship to other parts of the work including clearances for maintenance and operations.
   3. Any exceptions to these specifications, with the reasons for requesting such exceptions, with calculations and drawings for redesign of related components, including detail drawings showing internal and assembly details, with installation instructions. Proposed layout showing any modifications or exceptions to related work made necessary by this work, with

calculations and drawings showing such modifications or exceptions.

D. Upon Project acceptance, the CONTRACTOR shall submit "Record Drawings" of the electrical, control, and instrumentation, along with step-by-step procedure manuals for the installation, operation start-up, and maintenance of the equipment. Each set shall include installation, operating, troubleshooting, and maintenance and overhaul instructions in complete detail. It shall also include possible breakdowns and repairs, and troubleshooting guides, as well as simplified wiring and control diagrams of the system installed. This shall provide the OWNER with comprehensive information on all systems and components to enable operation, service, maintenance and repair. Exploded or other detailed views of all equipment, devices, assemblies, and accessory components shall be included, together with complete parts lists and ordering instructions.

1. Record Drawings:
    a. The CONTRACTOR shall maintain a marked up set of Contract Document Plans showing actual installed circuit numbers, conduit sizes, cable tray routing, number of conductors, conductor sizes (larger than #12 AWG), and all other deviations from the design Plans.
    b. Underground conduit and concealed items shall be dimensioned on the Plans from permanent, visible, building features.
    c. The CONTRACTOR shall provide actual transformer kVA, disconnect switch rating, starter, and overload heater size (if applicable) along with all other protective equipment for all 480, 240, 208 and 120V devices as part of the one-line record drawings.
    d. The CONTRACTOR shall revise all conductor identification and panel schedules to indicate as-built conditions.

PART 2 – PRODUCTS

2.01 GENERAL MATERIALS AND METHODS

A. Materials, equipment, and parts comprising any unit, or part thereof, specified or indicated on the Plans, shall be new and unused, of current manufacture, and of highest grade consistent with the state of the art. Damaged materials, equipment, and parts, are not considered to be new and unused, and will not be accepted.

B. Field verification of scale dimensions on Plans is directed, since actual locations, distances, and levels will be governed by actual field conditions. The CONTRACTOR shall also review architectural, structural, yard, mechanical, and other Plans, and the accepted electrical and mechanical shop drawings, and shall adjust their work to conform to the conditions indicated therein.

C. The fabricator of major components, such as distribution panelboards, switchgear/switchboards, and motor control centers, shall also be the manufacturer of the major devices therein.

D. Refer to various Division sections for individual equipment manufacturers. Indicated manufacturers are subject to strict compliance with the specifications and complete project documents. The reference to a particular manufacturer does not relieve the CONTRACTOR from conforming to the specified requirements.

2.02 NAMEPLATES

A. Where indicated elsewhere in these specifications, or on the Plans, the CONTRACTOR shall furnish and install nameplates, which shall be white laminate with black letters. The nameplates shall be fastened to the various devices with round head stainless steel screws. Each disconnecting means for service, feeder, branch, or equipment conductors, shall have nameplates indicating its purpose.

2.03 EQUIPMENT ASSEMBLIES

A. Equipment assemblies, such as Service Entrance Sections, Switchgear, Switchboards, Control and Distribution Panels, and other custom fabricated electrical enclosures shall bear a UL label as a complete assembly. The UL label on the individual components making up the assembly will not be considered sufficient to meet the present requirement. Whenever a generic UL label does not apply for the assembly, a serialized UL label shall be affixed to the assembly, and the serial number shall be submitted with the assembly record shop drawings.

B. Custom fabricated electrical control panels, and enclosures, shall bear a UL label affixed by a local UL inspector.

PART 3 – EXECUTION

3.01 UTILITY SERVICE AND EQUIPMENT

A. Electrical Utility: The CONTRACTOR shall be responsible for contacting and coordinating the electrical utility work with the electrical utility company:

Arizona Public Service (APS)
M.S. 4714
6672 Corsair Avenue,
Prescott, AZ 86301
(928) 443-6794
www.aps.com

B. The CONTRACTOR shall be responsible for furnishing and installing equipment and material required to bring electrical power service to the service location in conformance with the electrical utility requirements. The CONTRACTOR may have to provide the following for the electrical utility company's primary (from utility power line to the utility transformer) and secondary (from utility transformer to the service) electrical lines in accordance with the electrical utility company's specifications and requirements:

1. Conduits (verify quantity and sizes).
2. Trenching, backfill, and compacting (verify trench size(s), backfill material, and compaction percentage requirements).
3. Concrete pad(s) (for pad mounted transformer(s)).
4. Cable protection along the vertical drop at the utility company's pole (if pole mounted transformer(s).
5. Other items required by the power utility company's specifications.

B. The CONTRACTOR shall also submit copies of service entrance shop Drawings to the utility, per utility submittal requirements, prior to submittal to the ENGINEER. The CONTRACTOR shall obtain written approval from the power utility company that the service entrance equipment is acceptable prior to releasing the order to the supplier for fabrication. A copy of the approval letter from the utility shall be transmitted to the ENGINEER along with the submittal.

C. The CONTRACTOR shall provide trenching, conduit, and backfill for the Telephone Company's communication lines from their main distribution panel to the connection box at this project site, as required by the Telephone Company.

D. Electrical equipment such as switchboard, switchgear, panelboards, industrial control panels, and meter socket shall have an arc flash label in accordance with NEC 110.16(a).

3.02 INSTALLATION OF ELECTRICAL EQUIPMENT

A. Coordinate the installation of electrical equipment with other trades.

1. Arrange for the building-in of equipment during structure construction.
2. Where equipment cannot be built-in during construction, arrange for sleeves, box-outs, and other openings, as required to allow installation of equipment after structure construction is

complete.

B. Verify that equipment will fit support layouts indicated.

C. Equipment Dimensions and Clearances:
   1. Do not use equipment that exceeds the indicated dimensions except as approved in writing by the ENGINEER.
   2. Do not use equipment or arrangements of equipment that reduce required clearances or exceed the space allocation.

D. Install equipment in accordance with the manufacturer's instructions.

E. Equipment Access:
   1. Install equipment so it is readily accessible for operation and maintenance.
   2. Equipment shall not be blocked or concealed.
   3. Do not install electrical equipment such that it interferes with normal maintenance requirements of other equipment.

F. Equipment shall be installed plumb, square and true with the building construction, and shall be securely fastened.

G. Outdoor wall-mounted equipment, and indoor equipment mounted on earth, or water bearing walls, shall be provided with corrosion-resistant spacers to maintain 1/4-inch separation between the equipment and the wall.

H. Screen or seal all openings into outdoor equipment to prevent the entrance of rodents and insects.

I. Equipment fabricated from aluminum shall not be imbedded in earth or concrete.

J. Provide all necessary anchoring devices and supports:
   1. Use supports as detailed on the Plans and as specified.
   2. Supports and anchoring devices shall be rated and sized based on dimensions and weights verified from approved equipment submittals.
   3. Hardware shall be stainless steel.
   4. Do not cut, or weld to, building structural members.
   5. Do not mount safety switches and external equipment to other equipment enclosures, unless enclosure mounting surface is properly braced to accept mounting of external equipment.

K. CONTRACTOR shall verify exact rough-in location and dimensions for connection to electrical items furnished by others.
   1. Shop drawings shall be obtained from those furnishing the equipment.
   2. Proceeding without proper information may require the CONTRACTOR to remove and replace work that does not meet the conditions imposed by the equipment supplied.
   3. Provide sleeves wherever openings are required through new concrete or masonry members. Place sleeves accurately and coordinate locations with the ENGINEER.
   4. Should any cutting and patching be required on account of failure of the CONTRACTOR to coordinate penetrations, such cutting and patching shall be done at the expense of the CONTRACTOR.
      a. The CONTRACTOR shall not endanger the stability of any structural member by cutting, digging, chasing, or drilling and shall not, at any time, cut or alter the work without the ENGINEER's written consent.
         1) Provide additional reinforcing if required.
         2) Cutting shall be done neatly using proper tools and methods.
      b. Subsequent patching to restore walls, ceilings, or floors to their original condition shall be done by the CONTRACTOR.

L. Provide concrete foundations or pads required for electrical equipment as indicated or specified.
   1. Floor-mounted equipment shall be mounted on a 4-inch concrete housekeeping pad. Pad

shall be poured on top of the finished floor or slab.

3.03 TEMPORARY POWER

A. The CONTRACTOR shall furnish, install, and maintain, temporary power and lighting systems needed for construction. This temporary system shall include weatherproof panel(s) for the CONTRACTOR's main breakers and distribution system. Ground fault interrupting equipment shall be installed. Connections shall be watertight, with wiring done with Type SO portable cable. After construction is completed, the CONTRACTOR shall remove temporary power equipment and devices.

3.04 CUTTING AND REPAIRING

A. Where it becomes necessary to cut into existing work for the purpose of making electrical installations, core drills shall be used for making circular holes. Other demolition methods for cutting or removing shall be reviewed by the ENGINEER prior to starting the work.

B. The CONTRACTOR shall repair damage caused by construction, or demolition work, and restore damaged areas to original condition.

3.05 CORROSION PROTECTION

A. Wherever dissimilar metals (except conduit and conduit fittings) come in contact, the CONTRACTOR shall isolate these metals, as required, with neoprene washers, 9 mil polyethylene tape, or gaskets. Where fastening conduit, electro-plated or equivalent fasteners and stainless steel bolts shall be used.

B. Factory finishes damaged during shipping, or construction, shall be restored to original new condition. Rust shall be removed, and bare metal surfaces shall be primed and painted to match the original surrounding finish.

C. Electrical panels, switchgear, motor control centers, and other electrical equipment, shall be shipped in sealed dust and moisture proof plastic sheet enclosures, and the seal maintained until units are installed. Said units shall be new and free of any dirt, dust, water, grease, rust, damaged parts or components. Relays, starters, circuit breakers, switches, contacts, insulators, mechanisms, and buses shall be free of dust, dirt, oil, moisture, metal shavings, and other debris before testing and energizing.

D. Once equipment is installed, it shall be protected at all times with plastic sheet covers until the area is free of dirt, dust, paint spray, water, and other trades. Heat shall be provided to eliminate condensation.

3.06 COORDINATION OF THE ELECTRICAL SYSTEM

A. The CONTRACTOR shall verify actual equipment, and motor full-load, and locked-rotor current ratings. The necessary minimum equipment, wire, and conduit sizes are indicated on the Plans. If the CONTRACTOR furnishes equipment of different ratings, the CONTRACTOR shall coordinate the actual current rating of equipment furnished with the branch circuit conductor size, the overcurrent protection, the controller size, the motor starter, and the branch circuit overcurrent protection. The branch circuit conductors shall have a current carrying capacity of not less than 125 percent of the actual full-load current rating. The size of the branch circuit conductors shall be such that the voltage drop from the overcurrent protection devices, up to the equipment, shall not exceed 3 percent, when the equipment is running at full-load and rated voltage.

3.07 TESTING

A. The electrical work shall be free from improper grounds and short circuits. The correctness of the wiring shall be verified first by visual comparison of the conductor connections with connection diagrams. Next, individual circuit continuity checks shall be made by using electrical circuit testers. Last, the correctness of the wiring shall be verified by the actual electrical operation of the electrical and mechanical devices. Any deviation from the wiring indicated on the Plans, or accepted Drawings, shall be corrected and indicated on the record drawings.

B. Each conductor shall be identified as required by the Contract Documents. This identification shall be indicated on the record drawings to enable rapid and accurate circuit tracing by maintenance personnel.

3.08 SINGLE LINE DIAGRAMS

A. Single line diagrams, as indicated on the Drawings, show circuit voltages, circuit protection rating, and other pertinent data. Where conflicts exist on the Drawings, the single line diagrams shall take precedence. Grounding conductors are not necessarily indicated. See grounding requirements specified elsewhere herein.

END OF SECTION

SECTION 26 0519 – LOW-VOLTAGE ELECTRICAL POWER CABLES

PART 1 – GENERAL

1.01 DESCRIPTION

A. Scope:
   1. Provide all labor, materials, equipment, and incidentals shown, specified, and required to furnish, install, test and terminate low-voltage cables.
   2. If larger loads than indicated in the plans (such as larger motor horsepower) are required, revise the raceways, conductors, starters, variable speed drives, overload elements, and branch circuit protectors to comply with the national electrical code.
   3. Types of cabling required include:
      a. Insulated cable for installation in raceways.

1.02 REFERENCES

A. Standards referenced in this Section are listed below:

ANSI/ NETA ATS	Acceptance Testing Specifications for Electrical Power Equipment and Systems
ASTM B3	Soft or Annealed Copper Wire
ASTM B8	Concentric-Lay-Stranded Copper Conductors, Hard, Medium-Hard or Soft
ASTM F2160	Solid Wall High Density Polyethylene (HDPE) Conduit Based on Controlled Outside Diameter (OD).
NEMA TC 7	Smooth Wall Coilable Electrical Polyethylene Conduit.
UL 44	Thermoset-Insulated Wires and Cables.
UL 1277	Standard for Electrical Power and Control Tray Cables with Optional Optical-Fiber Members.

1.03 QUALITY ASSURANCE

A. Regulatory Requirements: Comply with the following:
   1. NEC Article 300, Wiring Methods.
   2. NEC Article 310, Conductors for General Wiring.
   3. NEC Article 392, Cable Trays.

1.04 SUBMITTALS

A. Action Submittals: Submit the following:
   1. Product Data:
      a. Manufacturer’s literature, specifications, and engineering data for low volt insulated cable proposed for use.
      b. Manufacturer’s cable pulling calculations for all cables (power and control) that are to be pulled through the jack and bore casing. Calculations shall indicate acceptability of the proposed cables with a proposed pulling setup. Calculations shall be made and submitted for review before ductbanks are installed.

B. Informational Submittals: Submit the following:
   1. Field Quality Control Submittals:
      a. Written results of field insulation resistance tests.

PART 2 – PRODUCTS

2.01 MATERIALS

A. Insulated Cable in Raceways:
   1. Application: Use for circuits located indoors and outdoors.
   2. Manufacturers: Provide products of one of the following:
      a. Southwire
      b. The Okonite Company
      c. American Insulated Wire
      d. General Cable
      e. Or ENGINEER-approved equal
   3. Material: Single or multiconductor type copper cable complying with ASTM B3 and ASTM B8 with flame-retardant, moisture- and heat-resistant insulation rated for 90°C in dry or wet locations, listed by UL.
   4. Application: Use UL listed type XHHW-2 for AWG No. 12 and larger. Use UL listed type THHN/THWN-2 for AWG No. 12 and smaller.
   5. Wire Sizes: Not smaller than AWG No. 12 for power and lighting and AWG No. 14 for 120-volt control circuits.
   6. Stranding: 600-volt cable shall be stranded, except that solid cable, AWG No. 10 and AWG No. 12 may be used for lighting circuits and receptacle circuits.
   7. Cables in Cable Trays shall be listed for cable tray use and be installed per NEC 392.

B. Cable Connectors, Solderless Type:
   1. Products and Manufacturers: Provide products of one of the following:
      a. T&B Sta-Kon
      b. Burndy Hylug
      c. Or ENGINEER-approved equal
   2. For wire sizes No. 4 AWG and above, use either compression type or bolted type with silver-plated contact faces.
   3. For wire sizes up to and including No. 6 AWG, use compression type. Alarm and control wire shall be terminated using forked type connectors at terminal boards.
   4. For wire sizes No. 250 KCMIL and larger, use connectors with at least two cable clamping elements or compression indents and provision for at least two bolts for joining to apparatus terminal.
   5. Properly size connectors to fit fastening device and wire size. Connectors shall be rated for 90°C, 600 volts.

C. Cable Splices:
   1. Products and Manufacturers:
      a. Compression-Type Splices: Provide one of the following:
         1) Burndy Hylink
         2) T&B Color-Keyed Compression Connectors
         3) Or ENGINEER-approved equal
      b. Spring Connectors: Provide one of the following:
         1) Buchanan B-Cap
         2) T&B Wire Connector
         3) Or ENGINEER-approved equal

2. For wire sizes No. 8 AWG and larger, splices shall be made up with compression type copper splice fittings. Splices shall be taped and covered with materials recommended by cable manufacturer to provide insulation equal to that on conductors.
3. For wire sizes No. 10 AWG and smaller, splices may be made up with pre-insulated spring connectors.
4. For wet locations, splices shall be waterproof. Compression type splices shall be waterproofed by sealant-filled, thick wall, heat shrinkable, thermosetting tubing or by pouring thermosetting resin into mold that surrounds the joined conductor. Spring connector splices shall be waterproofed with sealant filler.
5. Splices shall be suitably sized for cable, rated 90°C, and 600 volts.

D. Wire and Cable Markers:
1. Provide wire and cable markers in accordance with these Specifications.

E. Variable Frequency Drive Symmetrical Type Cable:
1. Power Conductors: Three (3) annealed, tinned, stranded copper per ASTM B8, coated per ASTM B33.
2. Insulation: Black cross-linked polyethylene (XLPE) per UL44.
3. Ground: Three (3) symmetrically placed bare annealed Class B stranded copper conductors per ASTM B3 and B8 whose cross-section areas shall add to equal the cross-section area of the power conductor size. The conductors shall be in direct contact with the shield and may be tinned or untinned.
4. Shield: Overall annealed 5 mil bare copper tape shield, 50% overlap for 100% coverage OR overall tinned copper braided shield and aluminum polymer tape for 100% coverage.
5. Jacket: Polyvinyl Chloride (PVC), oil resistant, per UL1277.
6. Voltage insulation: 2000V.
7. Cable size shall be as indicated on the Drawings.
8. Splices: Splices in VFD cables shall not be permitted.
9. Connections and Termination: cable and shield terminations and connections shall be in complete accordance with VFD, motor and cable manufacturers published requirements.
10. Manufacturers: General Cable CVTC-VFD; Southwire type TC VFD cable; or equal.

2.02 SOURCE QUALITY CONTROL

A. Factory Tests:
1. Factory-test wire and cable in accordance with UL standards

PART 3 – EXECUTION

3.01 INSTALLATION

A. Install cables complete with proper terminations at both ends. Check and correct for proper phase sequence and proper motor rotation.

B. Pulling:
1. Use insulating types of pulling compounds containing no mineral oil.
2. Pulling tension shall be within limits recommended by wire and cable manufacturer.
3. Use dynamometer where mechanical means are used.
4. Cut off section subject to mechanical means.

C. Bending Radius: Limit to minimum of six times cable overall diameter and in accordance with manufacturer requirements.

D. Slack: Provide maximum slack at all terminal points.

E. Splices:
   1. Where possible, install cable continuous, without splice, from termination to termination.
   2. Where required, splice as shown and also where required for cable installation. Splices below grade, in manholes, handholes, and wet locations shall be waterproof.
   3. Splices are not allowed in conduits.
   4. Splices are not allowed in VFD cables.

F. Identification:
   1. Identify conductors in accordance with applicable Sections of Division 26 – Electrical.
   2. Identify power conductors by circuit number and phase at each terminal or splice location.
   3. Identify control and status wiring using numeral tagging system.

G. Color-code power cables as follows:
   1. No. 8 AWG and Smaller: Provide colored conductors.
   2. No. 6 AWG and Larger: Apply general purpose, flame retardant tape at each end, wrapped in overlapping turns to cover an area of at least two inches.
   3. Colors: Match color scheme in use at the Site. If the Site does not have an existing color scheme, use the following colors:

System	Conductor	Color
All Systems	Equipment Grounding	Green
240/120 Volts Single-Phase, Three-Wire	Grounded Neutral One Hot Leg Other Hot Leg	White Black Red
208Y/120 Volts Three-Phase, Four-Wire	Grounded Neutral Phase A Phase B Phase C	White Black Red Blue
480Y/277 Volts Three-Phase, Four-Wire	Grounded Neutral Phase A Phase B Phase C	Gray Brown Orange Yellow

3.02 FIELD QUALITY CONTROL

A. Site Tests:
   1. Test each electrical circuit after permanent cables are in place, to demonstrate that circuit and equipment are connected properly and will perform satisfactorily, free from improper grounds and short circuits. Document each test performed.
   2. Individually test 600-volt cable mechanical connections after installation and before they are put in service, with calibrated torque wrench. Values shall be in accordance with manufacturer's recommendations.
   3. Individually test 600-volt cables for insulation resistance between phases and from each phase to ground. Test after cables are installed and before they are put in service, with Megger for one minute at voltage rating recommended by cable manufacturer or in accordance with ANSI/NETA ATS recommendations.
   4. Insulation resistance for each conductor shall not be less than value recommended by cable manufacturer. Cables not meeting recommended value or that fail when tested under full load conditions shall be replaced with a new cable for full length.

END OF SECTION

SECTION 26 0523 – INSTRUMENTATION AND COMMUNICATION CABLES

PART 1 – GENERAL

1.01 DESCRIPTION

A. Scope:
   1. Provide all labor, materials, equipment, and incidentals shown, specified, and required to furnish and install instrumentation and communication cables.

1.02 REFERENCES

A. Standards referenced in this Section are listed below:

ASTM A510/ A510M	Wire Rods and Coarse Round Wire, Carbon Steel and Alloy Steel
ASTM B633	Electrodeposited Coatings of Zinc on Iron and Steel
ANSI/TIA/ EIA-568	Commercial Building Telecommunications Cabling (requirements and restrictions of Technical Service Bulletins (TSBs) apply.)
RS-485	Electrical Characteristics of Generators and Receivers for Use in Balanced Digital Multipoint Systems (also known as TIA/EIA-485).
UL 13	Power-Limited Circuit Cables
UL 1581	Standard for Electrical Wires, Cables and Flexible Cords
UL VW-1	Vertical Wire Flame Test
UL 1666	Test for Flame Propagation Height of Electrical and Optical-Fiber Cables Installed Vertically in Shafts

1.03 QUALITY ASSURANCE

A. Regulatory Requirements:
   1. NEC 725 – Class 1, Class 2, and Class 3 Remote-Control, Signaling and Power-Limited Circuits
   2. NEC 727 – Instrumentation Tray Cable
   3. NEC 800 – Communications Circuits

1.04 SUBMITTALS

A. Action Submittals: Submit the following:
   1. Product Data: Manufacturer's technical information for instrumentation cables and communications cables proposed.
   2. Provide pulling calculations for cables to be installed in the jack and bore ductbank.

B. Informational Submittals: Submit the following:
   1. Field Quality Control Submittals: Written report of results of field quality control testing specified in this Section.

PART 2 – PRODUCTS

2.01. MATERIALS

A. Single and Multiple Shielded Pair Instrument Cable:
   1. Bare, soft annealed copper, 7 strand, PVC insulated conductors, No. 16 AWG minimum (unless indicated otherwise on the drawings / conduit schedule), twisted with aluminum/mylar shield with 25 percent minimum overlap, stranded tinned 20 AWG copper drain wire and PVC outer jacket. Rated for 600 volts. Temperature rated 90°C in dry installations, rated 75°C in wet locations. UL Type TC, UL listed for cable tray use, sunlight resistant. The abbreviation "STP" or "TSP" is used for shielded twisted pair on the Drawings.

2. Product and Manufacturer: Provide shielded cable of the following:
    a. Alpha Wire Company.
    b. Or ENGINEER-approved equal.
3. Cable shall be plenum rated when all or part of the cable is not encased in conduit.
4. Multi pair instrument cable shall have individual pair shielding and overall shielding.

B. Cable Terminals:
1. Manufacturers: Provide products of one of the following:
    a. T&B Sta-Kon
    b. Burndy Insulug
    c. Or ENGINEER-approved equal
2. Fork type copper compression terminals with nylon insulation for termination of cable at terminal blocks.

C. Single Shielded Triad Instrument Cable:
1. Bare, soft annealed copper, 7-strand, PVC insulated conductors, No. 16 AWG minimum, twisted with aluminum/mylar shield with 25 percent minimum overlap, stranded tinned 20 AWG copper drain wire and PVC outer jacket. Rated for 600 volts. Temperature rated 90°C in dry installations, rated 75°C in wet locations. UL Type TC, UL listed for cable tray use, sunlight resistant. The abbreviation “STT” or “TST” is used for shielded twisted triad on the Drawings.
2. Product and Manufacturer: Provide shielded cable of the following:
    a. Alpha Wire Company.
    b. Or ENGINEER-approved equal
3. Cable shall be plenum rated when all or part of the cable is not encased in conduit.

D. Shielded Ethernet Category 5e Premises Cable:
1. This cabling is for outdoor applications, process control interface (VFDs, PLCs, etc.), lighting control component interconnections, and anywhere network cables will be routed in the same ductbank, manhole, handhole, or other raceway as AC power cabling.
2. Furnish, install, and terminate from each field device to the network switch.
    a. Suitable Applications: Gigabit Ethernet, 100BaseTX, 100MHz Category 5e.
    b. Number of Pairs: 4
    c. Total Number of Conductors: 8
    d. AWG: 24
    e. Stranding: Solid
    f. Conductor Material: Bare Copper
    g. Color Code: EIA 568
    h. Shield: Double-shielded version with 100% coverage aluminum foil tape plus tinned copper braid
    i. Insulation Material: Polyolefin
    j. Outer Jacket Material: PVC, outdoor rated, sunlight resistant, oil resistant
    k. Outer Jacket Color: Blue.
    l. TIA/EIA Specification: 1005, 568B compliant
    m. UL Flame Test: UL 1666 Riser compliant
    n. Manufacturer: Belden, Model 7957A
    o. Use shielded RJ45 strain relief plug systems by L-com (TDS8PC5) with plug-boots (TDS8CVR-BK).

PART 3 – EXECUTION

3.01 INSPECTION

A. Examine conditions under which materials and equipment will be installed and notify OWNER in writing of conditions detrimental to proper and timely completion of the work. Do not proceed with the work until unsatisfactory conditions are corrected.

3.02 INSTALLATION

A. General:
   1. Install cables complete with proper terminations at both ends.
   2. Install in conduit separate from power cables, unless shown or indicated otherwise.
   3. Ground shield on shielded cables at the source end (PLC panel, etc.).
   4. Identify conductors in accordance with these Specifications.
   5. Install and terminate Supplier-furnished cable in accordance with equipment manufacturer requirements and cable manufacturer’s recommendations.
   6. Install in accordance with Laws and Regulations, including NEC.
   7. Splicing of instrumentation and communication cables is not permitted unless approved by the ENGINEER of record.

3.03 FIELD QUALITY CONTROL

A. Site Tests:
   1. Test shielded instrumentation cable shields with ohmmeter for continuity along full length of cables, and for shield continuity to ground.
   2. Connect shielded instrumentation cables to calibrated 4 to 20 mA DC signal transmitter and receiver. Test at 4 and 20 mA DC transmitter settings.
   3. Replace with new cables the full length of cables that fail test.
   4. Test equipment shall be provided by CONTRACTOR.
   5. Test all Ethernet cables with a Fluke DSP100 Cable Meter (or equal) testing system. Each cable shall be tested from the connected data jack, control panel, VFD, UPS, etc., to the patch panels. A qualified factory-trained manufacturer's representative shall certify in writing that the network cabling system has been installed, adjusted, and tested in accordance with the cable manufacturer's recommendations and industry standards for performance testing. Certification shall bear the typewritten name and signature of the person responsible for the work. Certification shall state the unit has passed all tests and is ready to be placed into operation. Provide four (4) copies of the manufacturer's representative's certification.

END OF SECTION

SECTION 26 0526 – GROUNDING AND BONDING FOR ELECTRICAL SYSTEMS

PART 1 – GENERAL

1.01 SCOPE OF WORK

A. A ground grid system consisting of the indicated configuration of copper wires, and ground rods, or concrete encased grounding electrodes ("UFERs") shall be provided to minimize station potential gradient irregularities and drain leakage and fault currents to earth.

B. Whether indicated on the Plans or not, neutral conductors, cable shields, metallic conduits, cable terminations, junction boxes, poles, surge arresters, and other non-current-carrying metallic parts of equipment shall be grounded.

1.02 SUBMITTALS

A. Products shall be submitted in accordance with Section 01 3300 – Submittal Procedures, and elsewhere in the Contract Documents prior to installation.

1.03 REFERENCES

A. National Electrical Code (NEC) Article 250

PART 2 – PRODUCTS

2.01 GENERAL REQUIREMENTS

A. A resistance of not greater than 25 ohms shall be provided, unless otherwise specified. Ground resistances shall be measured as herein described. Resistances of systems requiring separate ground rods, rather than a counterpoise, shall be measured separately before bonding below grade. The combined ground resistance of separate systems bonded together below grade may be used to meet the specified ground resistance, but the minimum number of rods indicated must still be provided.

2.02 GROUND RODS

A. Ground rods shall be copper-clad steel conforming to UL 467, 3/4 inch in diameter by 10 feet in length. Unless otherwise indicated, ground rods shall be driven into the ground until tops of rods are approximately 6 inches below finished grade. In counterpoise systems. Tops of ground rods shall be approximately at elevations of counterpoises. Where the specified ground resistance cannot be met with the indicated number of ground rods, additional ground rods, longer ground rods, or deep-driven sectional rods shall be installed and connected until the specified resistance is obtained, except that not more than three additional ground rods shall be required at any one installation. Ground rods shall be spaced as evenly as possible at least 6 feet apart and connected below grade.

2.03 CONNECTIONS

A. Connections above grade shall be made with bolted solderless connectors, and those below grade shall be made by a fusion-welding process. An embossing die code or other standard method shall provide visible indication that a connector has been adequately compressed on the ground wire.

2.04 GROUNDING ELECTRODE CONDUCTOR

A. Service entrance ground wires shall be sized in accordance with the most recent publication of NEC Table 250-66, unless otherwise indicated on the Plans. After being located to provide maximum physical protection, exposed ground wires shall be securely attached to structural supports at not more than 2-foot intervals with suitable fasteners. Bends greater than 45 degrees in ground wires are not permitted. Routing of ground conductors through concrete should be avoided, except where specifically called for in

these Documents. When concrete penetration is necessary, nonmetallic conduit shall be cast flush with the points of concrete entrance and exit, so as to provide an opening for the ground wire. The opening shall be sealed with a suitable compound after installation of the ground wire.

2.05 EQUIPMENT GROUNDING CONDUCTOR

A. Neutral conductors shall be grounded where indicated. Equipment grounding conductors shall be sized in accordance with the most recent publication of NEC Table 250-122, unless otherwise indicated. Ground wires shall be protected by conduit, where such wires run exposed above grade in non-fence-enclosed areas, or are run through concrete construction. Where concrete penetration is necessary, nonmetallic conduit shall be cast flush with the points of concrete entrance and exit, so as to provide an opening for the ground wire. The opening shall be sealed with a suitable compound after installation of the ground wire. Bends greater than 45 degrees in ground wire connections to the ground rods, or counterpoises are not permitted.

2.06 EQUIPMENT GROUNDING

A. Equipment frames of motor housings, metallic tanks, metallic equipment enclosures, metal splicing boxes, chain-link fencing, and other metallic noncurrent-carrying metal items, shall be grounded. Connections to earth shall be made in the same manner as required for system grounding. Equipment or devices operating at less than 750 volts may be connected to secondary neutral grounding electrodes.

2.07 SURGE ARRESTER GROUNDING

A. Surge arresters shall be grounded. Resistance to ground for intermediate-class arresters shall be not more than 10 ohms and for distribution-class arresters shall be not more than 25 ohms. Ground wire connections shall be not less than No. 4 AWG for distribution arresters and No. 1/0 AWG for intermediate arresters. Connections to earth shall be made in the same manner as required for neutral conductors. Surge arrester grounds may use the same ground wires provided for equipment operating at more than 750 volts. Surge arrester and secondary neutral grounds shall be separate from and independent of each other but both grounds shall be bonded together below grade at the ground rods or may utilize a common counterpoise.

2.08 LIGHTING POLE GROUNDING

A. Base of lighting poles shall be connected to an adjacent ground rod as indicated on Plans. A ground connection from poles back to neutral ground points shall also be provided utilizing equipment grounding conductor.

2.09 METALLIC STRUCTURES

A. Metallic structures and buildings shall be grounded per NEC.

2.10 GROUNDING RINGS

A. When required, grounding rings shall be installed using bare copper cable with ground rods at least 25 feet intervals using thermoweld connecting means as indicated on Plans in accordance with NEC requirements.

PART 3 – EXECUTION

3.01 INSTALLATION

A. It is the intent of these Contract Documents that all device and equipment grounds shall be run as a separate conductor in the conduit from the equipment to the ground. Wireways and enclosures shall be properly bonded and grounded, and ground conductors shall be run for all circuits.

B. Equipment cases and devices shall be grounded. Ground rods shall be driven and concrete encased conduits installed before a building or structure is built and ground conductors brought through the concrete to accessible points for grounding equipment. These systems shall be installed at each structure, where transformers, switchboards, panelboards, and MCCs are installed.

C. Duct banks shall contain a concrete encased system bare copper ground conductor. The system ground conductors shall run continuously in duct banks, through handholes and other raceway boxes. The system ground shall be connected to the structure grounding systems to provide a continuous grounding system. Each metallic raceway, panel, switchboard, and other metallic devices associated with the electrical and control systems shall be bonded to this grounding system.

D. Ground rod shall be installed not less than 6 inches below grade. Equipment, neutral, and surge arrester ground wires shall be connected to the ground grid as indicated.

E. Make buried and concrete-encased cable-to-cable and cable-to-ground rod connections using exothermic welds by Cadweld, Thermoweld**,** or ENGINEER-approved equal.

F. Each raceway must have a separate grounding conductor independent from the raceway material.

G. Route the conductors inside the raceway.

H. Interconnect the secondary MCC, switchgear, or panelboard neutral bus to the ground bus in the secondary switchgear compartment only at the service entrance point or after a transformer.

3.02 TESTS

A. Pre-Energization Tests - Pre-energization tests shall include, but shall not be limited to tests that the equipment engineer is required to perform under paragraph "GENERAL REQUIREMENTS." No part of the electrical system shall be energized until all station grounding system components have been tested and demonstrated to comply with the requirements specified, and until associated test reports have been submitted and approved.

B. Operating Test - After the installation is completed, the CONTRACTOR shall conduct an operating test for approval. Equipment shall be demonstrated to operate in accordance with the requirements herein. Tests shall be performed in the presence of the ENGINEER. The CONTRACTOR shall furnish instruments and personnel required for the test.

C. Ground-Resistance Measurements - Ground-resistance measurements of each ground rod shall be taken and certified by the CONTRACTOR to the ENGINEER. No part of the electrical distribution system shall be energized prior to the resistance testing of that system's ground rods and grounding system and submission of test results to the ENGINEER. Test reports shall indicate the location of the ground rod and grounding system and the resistance and the soil conditions at the time the test was performed. When the building water service is used as a ground or part of the grounding system, ground-resistance measurements shall also be made of this connection. Ground-resistance measurements shall be made in normally dry weather, not less than 48 hours after rainfall, and with the ground under test isolated from other grounds. The resistance to ground shall be measured using the fall-of-potential method described in IEEE Std 142 and Std 81.

3.03 TEST RESULTS

A. The CONTRACTOR shall perform the above tests and submit a certified test report prior to energizing the equipment.

END OF SECTION

SECTION 26 0529 – HANGERS AND SUPPORTS FOR ELECTRICAL SYSTEMS

PART 1 – GENERAL

1.01 DESCRIPTION

A. This Section outlines the wiring requirements for the electrical work and forms a part of all other Sections of Division 26 unless otherwise specified.

1.02 SUBMITTALS

A. Submit for the OWNER's approval material lists, shop drawings, factory test reports, and technical data to the extent required in these Specifications.

PART 2 – PRODUCTS

2.01 GENERAL

A. Provide basic materials and all wiring installations as indicated, specified, and required.

2.02 SUPPORTS

A. Provide the galvanized and PVC coated metal channels, fittings, stanchions, clamps, hangers, and required hardware to support all conduit and equipment as required.

B. Channels shall be steel and cold rolled. One side of the channel shall have a continuous slot. On both sides of the slot, the edges turn inward and forms a guide for the spring nuts. The fittings shall be fabricated from steel and attached to the channel with bolts and spring nuts. The channel, fittings and hardware shall be hot-dipped galvanized and manufactured by Unistrut, GTE Products Co., Ideal Industries, Josyln Mfg & Supply Co., or ENGINEER-approved equal.

C. One-Hole Clamps shall be malleable iron, galvanized for steel conduits and equipped with clamp-backs. The clamps shall be Efcor, Thomas and Betts, Appleton or ENGINEER-approved equal.

D. Beam Clamps shall be malleable iron, galvanized, right angle and parallel types. The clamps shall be manufactured by Efcor, Thomas and Betts, Appleton or ENGINEER-approved equal.

E. Spacers shall be plastic and provided to support underground conduits for concrete encasements. The spacers shall be Carlon, Johns-Manville, Underground Products or ENGINEER-approved equal.

F. Steel Anchors shall be sleeve and stud types for securing equipment to concrete foundations, floors, and walls. The anchors shall be Phillips "Red Head", Diamond or ENGINEER-approved equal. Concrete foundation to include 4" housekeeping pad.

G. Toggle Bolts shall be steel, spring wing type for securing equipment to hollow walls and ceilings. Toggle bolts shall be Phillips "Red-Head", Diamond or ENGINEER-approved equal.

H. Conduit Hangers shall be heavy gauge formed steel, galvanized, and equipped with carriage bolts, 1/4-inch rods and nuts. The hangers shall be Efcor, Appleton, Ideal Industries, Josyln Mfg & Supply Co. or ENGINEER-approved equal.

I. U-Bolts shall be heavy gauge steel, galvanized and equipped with two hexagon steel nuts. The U-bolts shall be Efcor, Kindorf or ENGINEER-approved equal.

J. Hardware shall be provided to securely attach all equipment and materials.

PART 3 – EXECUTION

3.01 GENERAL

A. A. Provide the required labor and equipment, and all checking, adjusting, and testing operations on the electrical installations.

3.02 SUPPORTS

A. Install the required structural channels, brackets, stanchions, U-bolts, clamps, anchors, hangers, fittings, and other hardware to securely attach and support all the equipment and conduits.

B. Painting. Brackets, stanchions, and other unfinished steel supports shall be painted per requirements of these Specifications.

C. Operation Tests. Perform operation tests and observe that all loads operate satisfactorily.

3.03 CHECKING, ADJUSTING AND TESTING

A. Provide the required labor and equipment, and all checking, adjusting, and testing operations on the electrical installations.

END OF SECTION

SECTION 26 0533.13 – CONDUIT FOR ELECTRICAL SYSTEMS

PART 1 – GENERAL

1.01 SCOPE OF WORK

A. Furnish and install conduits as required, and as shown on the Plans. Materials employed shall be as shown on the Plans.

1.02 SUBMITTALS

A. Submit product literature including manufacturer part number, model number, material, size, and specifications. Material shall not be installed until the ENGINEER has reviewed the submittal data.

B. Shop Drawings shall be submitted for review and acceptance showing routing, conduit size, and number and size of wires in each conduit before installation of conduit and any related work.

C. Proposed routing of conduits buried under floor slabs-on-grade.

D. Identify conduit by tag number of equipment served or by circuit schedule number.

E. Proposed routing and details of construction including conduit and rebar embedded in floor slabs, columns, etc. Identify conduit by tag number of equipment served or by circuit schedule number.

F. Proposed location and details of construction for openings in slabs and walls for raceway runs.

1.03 REFERENCES

A. American National Standards Institute (ANSI): C80.1, Electrical Rigid Steel Conduit.

B. National Electric Manufacturers Association (NEMA):
   1. RN-1, Polyvinyl-Chloride (PVC) Externally Coated Galvanized Rigid Steel Metal Conduit and Intermediate Metal Conduit
   2. TC-2, Electrical Polyvinyl Chloride (PVC) Conduit

C. Underwriters Laboratories Inc. (UL):

1	Flexible Metal Conduit
6	Electrical Rigid Metal Conduit - Steel
360	Liquid-Tight Flexible Steel Conduit
467	Grounding and Bonding Equipment
514C	Nonmetallic Outlet Boxes, Flush-Device Boxes and Covers
651	Schedule 40, 80, Type EB and A Rigid PVC Conduit and Fittings
870	Wireways, Auxiliary Gutters, and Associated Fittings
884	Underfloor Raceways and Fittings
886	Outlet Boxes and Fittings for Use in Hazardous (Classified) Locations

PART 2 – PRODUCTS

1.01 RACEWAYS

A. Indoor exposed conduit shall be galvanized rigid steel (GRS) unless specifically indicated otherwise on the Plans. Exposed conduits outdoors or in a wet or corrosive area shall be PVC coated GRS unless otherwise indicated Underground and/or concrete encased conduits shall be PVC, unless otherwise indicated. All wiring, except as otherwise noted, shall be in conduit. Conduit size shall not be less than the National Electrical Code (NEC)

size required for the conductors therein and shall not be smaller than 3/4-inch. No underground conduit shall be less than one inch.

B. Condulet type fittings shall be Form 8, Crouse-Hinds, Appleton, or ENGINEER-approved equal with gasketed covers. All condulets located outdoors or in wet locations shall be weathertight.

C. In unclassified areas, flexible conduit shall be grounding type, weatherproof, corrosion resistant, and watertight. If indicated on the plans, liquidtight flexible conduit shall have an external bonding jumper. Connectors shall be as manufactured by OZ-Gedney, Type 4Q-L, or ENGINEER-approved equal.

D. Couplings, connectors, and fittings shall be standard types specifically designed and manufactured for the purpose. They shall be installed to provide a firm mechanical assembly and electrical conductivity throughout.

E. Expansion fittings shall be OZ type AX with jumper for exposed locations and type DX at structural expansion joints, Spring City, or ENGINEER-approved equal. Conduits shall have expansion fittings in accordance with NEC.

F. The conduits and fittings shall be supported per NEC requirements as a minimum.

1.02 GALVANIZED RIGID STEEL (GRS)

A. Conduit and couplings shall be hot-dipped galvanized with zinc coated threads and outer coating of zinc bichromate, in accordance with ANSI C80.1 standards, as manufactured by Jones & Laughlin Steel Corporation, Allied Tube & Conduit Corporation, Triangle PWC, Republic, Youngstown, or ENGINEER-approved equal.

B. Steel conduit shall not be buried in earth without concrete encasement and additional corrosion protection. A half lapped rapping of 20 mil PVC based corrosion protection tape shall be used.

1.03 PVC COATED GALVANIZED RIGID STEEL (PVC-GRS)

A. PVC coated GRS conduit shall conform to NEMA RN-1 and ANSI C80.1 standards.

B. The zinc surface of the conduit shall remain intact and undisturbed on both the inside and the outside of the conduit throughout the preparation and application processing. A Polyvinyl Chloride (PVC) coating shall be bonded to the galvanized outer surface of the conduit. The bond between the PVC coating and the conduit surface shall be greater than the tensile strength of the plastic. The thickness of the PVC coating shall be a minimum of 0.040-inch (40 mil).

C. A loose coupling shall be furnished with each length of conduit. A PVC coating shall be bonded to the outer surface of the coupling and a PVC sleeve equal to the outside diameter of the uncoated conduit shall extend beyond both ends of the coupling approximately one pipe diameter or 1-1/2 inches, whichever is smaller. The wall thickness of the coating on the coupling and the sleeve shall be a minimum of 0.055-inch (55 mil).

D. A PVC coating shall be bonded to the inner and outer surface of all conduit bodies and fittings and a PVC sleeve shall extend from all hubs. The wall thickness of the coating on conduit bodies and fittings and the sleeve walls shall be identical to those on couplings in length and thickness. The covers on all conduit bodies shall be coated on both sides and shall be designed to be completely interchangeable. The inside of conduit bodies shall remain undisturbed in the processing.

E. Type 316 stainless steel screws shall be furnished and used to attach the cover to the conduit body. All coated material shall be installed and patched according to the

manufacturer's recommended installation and patching instructions.

F. Conduit straps shall be PVC coated or 316 stainless steel.

G. PVC coated conduit and fittings shall be as manufactured by Plasti-Bond, Perma-Cote, Occidental Coating Company, Kor Kap, or ENGINEER-approved equal.

H. PVC coated flexible conduits shall be liquid and vaportight and manufactured in accordance with UL 360 standards.

2.04 RIGID NONMETALLIC - PVC

A. Where specifically indicated on the Plans, or elsewhere specified, conduit may be high density Schedule 40, 90°C, heavy-duty PVC. The conduit shall be manufactured from virgin polyvinyl chloride compound which meets ASTM D1784, NEMA TC-2, and UL 651 standards. Smoke emissions shall be limited to less than 6 grams per 100 grams of material tested.

B. Where conduit concrete encasement is indicated on the Plans, conduit supports shall be installed at five foot intervals. PVC conduit shall be manufactured by Carlon, Triangle Conduit & Cable, or ENGINEER-approved equal.

2.05 LIQUIDTIGHT FLEXIBLE METAL CONDUIT

A. Liquidtight flexible metal conduit shall be liquid and vaportight, oil and ultraviolet ray resistant and manufactured in accordance with UL 360 standards. Liquidtight flexible metal conduit shall be formed of a continuous, spiral wound, galvanized steel core with an extruded PVC jacket. The PVC jacket shall be rated for high ambient heat applications, 90°C.

B. For corrosive locations, liquidtight flexible metal conduit shall be formed of a continuous, spiral wound, aluminum core with an extruded PVC jacket. The PVC jacket shall be impervious to corrosive liquids and vapors.

C. An external bonding conductor shall be required for all flexible conduit connections. Flexible conduit and connectors shall be listed for grounding.

D. Connectors for liquidtight flexible conduit shall be galvanized, furnished with a sealing ring and locknut, and suitable for wet locations.

PART 3 – EXECUTION

3.01 INSTALLATION

A. Conduit runs are schematic only, and shall be modified as required to suit field conditions, subject to review and acceptance by the ENGINEER.

B. Conduit shall run continuously between outlets and shall be provided with junction boxes where connections are made. Couplings, connectors, and fittings shall be acceptable types designed and manufactured for the purpose, and shall provide a firm mechanical assembly, and electrical conductivity throughout.

C. Conduit runs shall be straight and true. Elbows, offsets, and bends shall be uniform and symmetrical. Changes in direction shall be made with long radius bends, or with fittings of the condulet type.

D. Conduit runs in buildings and structures shall be exposed except as specifically noted, or accepted by the ENGINEER.

E. Conduit runs shall not interfere with the proper and safe operation of equipment, and shall not block or interfere with ingress or egress, including equipment removal hatches.

F. Exposed conduits shall be securely fastened with clamps, or straps, intended for conduit use. All exposed conduit shall be run on the walls and ceiling only and shall be parallel to the planes of the walls or ceiling. No diagonal runs will be permitted. Flexible conduit shall be used only for short lengths required to facilitate connections between rigid conduit to motors from junction boxes, or control equipment. The maximum length of flexible conduit shall be 3 feet.

G. Conduit runs on water-bearing walls shall be supported one inch away from the wall on an accepted channel. When channel galvanizing, or other coating, is cut or otherwise damaged, it shall be field coated to original condition. No conduit shall be run in water-bearing walls, unless specifically designated otherwise.

H. Conduit shall be thoroughly reamed to remove burrs. GRS shall be reamed during the threading process, and Rigid Nonmetallic PVC shall be reamed before applying fittings. A zinc rich cold galvanizing shall be used to restore corrosion protection on field cut threads. Bushings and lock nuts or hubs shall be used at conduit terminations. The total number of bends in any run between pull points shall not exceed 360 degrees. Junction boxes and pull boxes shall be installed at points acceptable to the ENGINEER. Conduit ends shall be plugged to prevent the entrance of moisture or debris during construction. All spare conduits shall be adequately capped and shall contain a suitable pull string.

I. Joints shall be set up tight. Hangers and fastenings shall be secure, and of a type appropriate in design, and dimensions, for the particular application.

J. Conduit runs shall be cleaned and internally sized (obstruction tested) so that no foreign objects, or obstructions remain in the conduit prior to pulling in conductors.

K. After installation of complete conduit runs 2 inches and larger, conduits shall be snaked with a conduit cleaner equipped with a cylindrical mandrel of a diameter not less than 85 percent of the nominal diameter of the conduit. Conduits through which the mandrel will not pass shall not be used.

L. Expansion fittings shall be installed across all expansion joints and at other locations where necessary to compensate for thermal expansion and contraction.

M. Provide trenching, backfill, and compaction for conduits installed underground.

N. Each conduit shall be provided with tags as specified on the plan details or with stainless steel identification tags affixed by means of stainless steel wire to the conduit's termination bushing. The minimum size of the identification tags shall be ¾-inch X 2-inches. The identification tag shall be embossed with the conduit number shown in the Plans. The letters and numbers on the tags shall, as a minimum, be 1/4-inch high.

END OF SECTION

SECTION 26 0533.16 – BOXES FOR ELECTRICAL SYSTEMS

PART 1 – GENERAL

1.01 SUMMARY

A. Section Includes:
   1. Outlet, pull and junction boxes.

1.02 QUALITY ASSURANCE

A. Referenced Standards: As required in these Specifications.

1.03 SUBMITTALS

A. Shop Drawings: In accordance with Section 01 3300 – Submittal Procedures.

1.04 DELIVERY, STORAGE, AND HANDLING

A. In accordance with these Specifications and Contract Documents.

PART 2 – PRODUCTS

2.01 ACCEPTABLE MANUFACTURERS

A. Subject to compliance with the Contract Documents, the following manufacturers are acceptable:
   1. Galvanized steel boxes:
      a. Appleton Electric Co.
      b. Steel City
      c. Raco
      d. Or ENGINEER-approved equal
   2. Sheet metal boxes for non-classified areas:
      a. Hoffman Engineering Co.
      b. Or ENGINEER-approved equal
   3. Corrosion-resistant boxes:
      a. Hoffman Engineering Co.
      b. Crouse-Hinds
      c. Or ENGINEER-approved equal
   4. Hazardous location boxes (Class I, II & Ill):
      a. Appleton Electric Co.
      b. Crouse-Hinds
      c. Killark
      d. O-Z/Gedney
      e. Or ENGINEER-approved equal
   5. Raintight and watertight boxes:
      a. Appleton Electric Co.
      b. Crouse-Hinds
      c. Or ENGINEER-approved equal
   6. Terminal boxes:
      a. Hoffman Engineering Co.
      b. Or ENGINEER-approved equal
   7. Boxes in sidewalk:
      a. Appleton Electric Co.
      b. Crouse-Hinds
      c. O-Z/Gedney

d. Or ENGINEER-approved equal.

8. Boxes in earth:
   a. Carlon Electric Products.
   b. Or ENGINEER-approved equal
9. Exposed switch and receptacle boxes:
   a. Appleton Electric Co.
   b. Crouse-Hinds
   c. Or ENGINEER-approved equal.

2.02 MATERIALS

A. Pull and Junction Boxes for Offices and other Dry Architecturally Finished Areas:
   1. Material: 14 GA, galvanized steel
   2. Concentric knockouts on all four sides
   3. Flat cover fastened with screws
   4. NEMA 1 classification
   5. UL listed

B. Pull and Junction Boxes for General Use Unclassified Areas Suitable for NEMA 12 Enclosures:
   1. Material: 14 GA galvanized steel with seams continuously welded, ground smooth and no knockouts
   2. Zinc-rich coating on all seams
   3. Stainless steel captivated cover screws threaded into sealed wells
   4. Flat door with oil resistant gasket
   5. NEMA 12 classification
   6. UL listed

B. Pull and Junction Boxes for Wet Areas:
   1. Material: 14 GA steel with polyester powder coating inside and out over phosphatized surfaces.
   2. Seams continuously welded, ground smooth, no knockouts
   3. Stainless steel clamps on four sides
   4. Flat cover with oil resistant gasket
   5. NEMA 4X classification
   6. UL listed

D. Pull and Junction Boxes for Corrosive Areas:
   1. Material: 14 GA steel with powdered epoxy resin coating inside and out or fiberglass-reinforced polyester material
   2. Steel boxes:
      a. Seams continuously welded, ground smooth, no knockouts
      b. Rolled lip around all sides
      c. Hinged door
      d. Captivated stainless steel door screws
      e. Flat door with oil-resistant gasket
   3. Fiberglass-reinforced polyester boxes:
      a. Hinged door with latch and lockout
      b. Neoprene door gasket
      c. Grounding bushing(s)
   4. NEMA 4X classification
   5. UL listed

E. Pull and Junction Boxes for Hazardous Areas:
   1. Material: Cast gray iron alloy or copper-free cast aluminum
   2. Drilled and tapped openings or tapered threaded hub equipped
   3. Flat bolted-down or threaded cover with neoprene gasket
   4. Stainless steel hex head screws
   5. Explosion proof, UL listed for Class 1 Groups C and D

F. Pull and Junction Boxes for Sidewalks:
   1. Cast-iron box and cover, hot-dip galvanized
   2. Flange for flush mounting
   3. Checkered cover with neoprene gasket, pry bar slots and stainless steel screws
   4. UL listed
   5. Drilled and tapped holes
   6. Watertight NEMA 4X classification

G. Large Pull and Junction Boxes (100 CU IN and larger):
   1. Located in offices and other dry architecturally finished areas where EMT is utilized:
      a. NEMA 1 gasketed without knockouts
   2. Located in general use areas:
      a. NEMA 12 construction:
         1) Welded steel
         2) Furnished with gray enamel inside and out over phosphatized surfaces
   3. Located in wet and corrosive areas:
      a. NEMA 4X with stainless steel screws.
   4. Constructed of 14 GA steel with seams continuously welded, ground smooth, no knockouts
   5. Rolled lip around all sides
   6. Rigid handles for covers larger than 9 sf or heavier than 25 lbs.
   7. Split covers when heavier than 25 lbs.

H. Terminal Boxes:
   1. Galvanized 16 GA steel box provided with plain blank screw cover, subpanel, and terminal points
   2. Refer to Drawing for dimensions and number of terminals
   3. Terminal blocks shall be screw-post barrier-type, white center marker strip
   4. Rated 20 ampere, minimum 600 V

I. Fiberglass Cable-Pulling Enclosure:
   1. Use: Access points to facilitate pulling of electrical cables in buried conduit runs.
   2. Size and quantity: As shown on Drawings
   3. Type: Rectangular fiberglass composite, suitable for direct burial pedestrian traffic on top, -50°F, chemical, sunlight, and weather resistant.
   4. Provide matching top with "ELECTRIC" logo.

J. Outlet Boxes:
   1. Use: Installation of wiring devices
   2. Boxes for exposed wiring:
      a. Cadmium plated, cast, ferrous metal, with threaded hubs
   3. Boxes for concealed wiring:
      a. Code gauge, hot-dip galvanized steel
      b. Include bar hangers for metal stud partitions
      c. Provide barriers between switches in boxes with 277 V switches on opposite phases

d. Use extension and plaster rings where required
e. Provide grounding screw.

PART 3 – EXECUTION

3.1 INSTALLATION

A. Use locknut and bushing for boxes in non-classified areas.

B. Use cast metal boxes with threaded conduit hubs in hazardous areas.

C. Use Type FS and FD boxes in wet areas and where exposed rigid steel conduit is required.

D. Use epoxy resin coated, stainless steel, cast aluminum or fiberglass boxes for corrosive areas.

E. Fill unused punched-out, tapped, or threaded hub openings with insert plugs.

F. Use outlet boxes sized to accommodate quantity of conductors enclosed.

G. Use boxes sized to accommodate conduit tying into box.

H. Install pull boxes or junction boxes in conduit runs where indicated or required to facilitate pulling of wires or making connections.
1. Make covers of boxes accessible.

I. Install pull boxes or junction boxes rated for the area classification.

J. Install rigid conduit squarely into boxes which do not have hubs or are drilled and tapped.
1. Install with locknut on the outside and bushing on inside.

K. Install conduit into boxes with hubs, or that are tapped, using thread lubricant.

L. Do not use back-to-back boxes on this Project.

M. Seal all points of conduit entry into fiberglass cable-pulling enclosures for a waterproof installation.

N. Support outlet boxes for incandescent fixtures and other ceiling-mounted devices in lay-in acoustical tile ceilings by bar hangers anchored to ceiling construction members which do not interfere with tile removal.

END OF SECTION

SECTION 26 0553 – IDENTIFICATION FOR ELECTRICAL SYSTEMS

PART 1 – GENERAL

1.01 SCOPE OF WORK

A. Electrical identification work specified in this section covers the following:
   1. Buried cable warnings
   2. Electrical power, control and communication conductors
   3. Operational instructions and warnings
   4. Danger signs
   5. Equipment/system identification signs

1.02 SUBMITTALS

A. Submittals to the ENGINEER shall include the following:
   1. Manufacturers data on electrical identification materials and products.
   2. Samples of each color, lettering style and other graphic representation required for each identification material or system.

1.03 MANUFACTURERS

A. Subject to compliance with requirements, manufacturers offering electrical identification products may be incorporated in the work include, but not limited to, the following:
   1. Brady, W.H. Co.
   2. Ideal Industries, Inc.
   3. Panduit Corp.
   4. or ENGINEER-approved equal

1.04 QUALITY COMPLIANCE

A. Comply with applicable requirements of UL Std. 969, "Marking and Labeling Systems", pertaining to electrical identification systems.

B. Comply with applicable requirements of NEMA Std. No's WC-1 and WC-2 pertaining to identification of power and control conductors.

C. Comply with the latest National Electrical Code

PART 2 – PRODUCTS

2.01 GENERAL

A. Except as otherwise indicated, provide manufacturer's standard products of categories and types required for each application. Where more than single type is specified for an application, selection is Installer's option, but provide single selection for each application.

2.02 COLOR CODED CONDUIT MARKERS

A. Provide manufacturer's standard pre-printed, flexible, or semi-rigid, permanent, plastic-sheet conduit markers, extending 360 degrees around conduits; designed for attachment to conduit by adhesive, adhesive lap joint of marker, matching adhesive plastic tape at each end of marker, or pretensioned snap-on. Except as otherwise indicated, provide lettering that indicates voltage of conductor(s) in conduit. Provide 8" minimum length for 2" and smaller conduit, 12" length for larger conduit.

B. Unless otherwise indicated or required by governing regulations, provide white markers with black letters.

C. Conduit identification shall be via stainless-steel tags, and as required in these Specifications.

2.03 CABLE AND CONDUCTOR WIRE MARKERS

A. Cable and conductor wire markers shall be self-laminating vinyl on white background, printed using a Brady TLS2200 printer, Seton printer, or ENGINEER-approved equal. Handwritten wire markers are not acceptable.

2.04 SELF-ADHESIVE PLASTIC SIGNS

A. Provide manufacturer's standard, self-adhesive or pressure-sensitive, pre-printed, flexible vinyl signs for operational instructions or warnings; of sizes suitable for application areas and adequate for visibility, with proper wording for each application, e.g., 208V, EXHAUST FAN, RECTIFIER.

B. Unless otherwise indicated or required by governing regulations, provide white signs with black lettering.

C. Signs shall be attached with stainless-steel screws.

2.05 LETTERING AND GRAPHICS

A. Coordinate names, abbreviations and other designations used in electrical identification work, with corresponding designations shown, specified, or scheduled. Provide numbers, lettering and wording as indicated or, if not otherwise indicated, as recommended by manufacturers, or as required for proper identification and operation/maintenance of electrical systems and equipment. Comply with ANSI A13.1 pertaining to minimum sizes for letters and numbers.

PART 3 – EXECUTION

3.01 INSTALLATION

A. Install electrical identification products as indicated, in accordance with manufacturer's written instructions, and requirements of NEC.

B. Where identification is to be applied to surfaces that require finish, install identification after completion of painting.

C. Comply with governing regulations and requests of governing authorities for identification of electrical work.

3.02 CONDUIT IDENTIFICATION

A. Where electrical conduit is exposed in spaces with exposed mechanical piping that is identified by a color-coded method, apply color-coded identification on electrical conduit in a manner similar to piping identification. Except as otherwise indicated, use white as coded color for conduit.

3.03 CABLE/CONDUCTOR IDENTIFICATION

A. Apply cable/conductor identification, including voltage, phase, and feeder number, on each cable/conductor in each box/enclosure/cabinet where wires of more than one circuit or communication/signal system are present, except where another form of identification (such as color-coded conductors) is provided. Match identification with marking system used in panelboards, shop drawings, contract documents, and similar previously established identification for project's electrical work.

3.04 EQUIPMENT/SYSTEM IDENTIFICATION

A. Install engraved plastic-laminate sign on each major unit of electrical equipment in building; including central or master unit of each electrical system including communication-control-signal systems, unless unit is specified with its own self-explanatory identification or signal system. Except as otherwise indicated, provide single line of text, 1/2" high lettering on 1-1/2" high sign (2" high where 2 lines are required),

white lettering in black field. Provide text matching terminology and numbering of the contract documents and shop drawings. Provide signs for each unit of the following categories of electrical work:

1. Panelboards, electrical cabinets, and enclosures.
2. Access panel/doors to electrical facilities.
3. Major electrical switchgear.

B. Install signs at locations indicated or, where not otherwise indicated, at location for best convenience of viewing without interference with operation and maintenance of equipment. Secure to substrate with brass or stainless-steel screws, except use adhesive where screws should not or cannot penetrate the substrate.

C. Identification signs shall be black lettering on a white field to match the Districts' standard.

3.05 CIRCUIT IDENTIFICATION

A. The 3-phase wires shall be identified at the switchgear, panelboards and motor control centers as Phases A, B, and C. At 277/480V, Phase A shall be brown, Phase B shall be orange, and Phase C shall be yellow.

B. In addition to color coding all conductors, each conductor shall be identified in each pull box, manhole, panelboard, cable tray, or termination with circuit identification markers. This identification is applicable to all power, control, alarm, and instrumentation conductors and these markings shall be recorded on the Record Documents. Markers shall be slip-on PVC sleeve type as manufactured by Brady, Seton, or equal.

C. Markers for other cabling shall be B-292 vinyl as manufactured by Brady, Seton, or ENGINEER-approved equal.

D. Exposed medium voltage conduits shall be labeled at 50-foot intervals with f-inch letters stating the voltage - example - "12,470 volts". Labels shall be vinyl plastic as manufactured by Brady, Seton, or ENGINEER-approved equal.

3.06 AUTOMATIC EQUIPMENT WARNING SIGNS

A. Permanent warning signs shall be mounted at all mechanical equipment that may be started automatically or from remote locations. Signs shall be in accordance with OSHA regulations and shall be suitable for exterior use. The warning signs shall be fastened with round head brass screws or bolts, located, and mounted in a manner acceptable to the ENGINEER.

B. Warning signs shall be 7 inches high by 10 inches wide, colored yellow and black, on not less than 18 gauge vitreous enameling stock. Sign shall read:

CAUTION
THIS EQUIPMENT STARTS
AUTOMATICALLY
BY REMOTE CONTROL

3.07 HIGH VOLTAGE WARNING SIGNS

A. Permanent and conspicuous warning signs shall be mounted on all equipment, doorways to equipment rooms, pull boxes, manholes, where the voltage exceeds 600 volts.

B. Signs shall be in accordance with OSHA regulation, and shall be suitable for exterior use. The warning signs shall be fastened with round head brass screws or bolts, located, and mounted in a manner acceptable to the ENGINEER.

C. Signs shall be 7 inches high by 10 inches wide, colored red and white, on not less than 18 gauge vitreous enameling stock. Sign shall read:

WARNING
HIGH VOLTAGE
KEEP OUT

3.08 CONDUCTOR FASTENERS

A. Glue-on type conductor fasteners shall not be used in any panels, panelboards, switchboards, switchgear, motor control centers, or other enclosures containing electrical devices and/or conductors.

END OF SECTION

SECTION 26 0573 – OVERCURRENT PROTECTIVE DEVICE COORDINATION STUDY

PART 1 – GENERAL

1.01 DESCRIPTION

A. General:
1. CONTRACTOR shall provide a short circuit analysis and protective device coordination study for the project electrical power source and distribution system.
2. The short circuit and coordination study report shall provide an evaluation of the electrical power system with the model numbers and settings of the protective devices.

B. Scope:
1. Perform and provide a complete short circuit analysis with equipment interrupting or withstand rating evaluation and a protective device coordination study for the electrical power distribution system serving the facility.
2. Include all portions of the electrical power distribution system from the utility primary service drop through and including motor loads 50 HP and greater, loads 50 KVA and larger, and protective devices 100 amperes and larger.
3. Electrical equipment bus impedance shall be assumed to be zero. Short circuit momentary duties and interrupting duties shall be calculated on the basis of maximum available fault current at each project power source or power distribution equipment including switchgear, switchboard, motor control center, and branch circuit panelboards.
4. A protective device coordination study shall be performed to determine proper selection of power fuse ratings, protective relay characteristics and settings, ratios and characteristics of associated voltage and current transformers, and circuit breaker trip characteristics and settings.
5. The coordination study shall include all voltage classes of equipment from the utility's closest upstream protective device to existing and new equipment including switchgear, switchboards, motor control centers, and 120-volt panelboards main circuit protection.
6. Panelboard branch circuit devices need not be considered. The phase overcurrent and ground-fault protection shall be included, settings for the adjustable protective devices, and electrical metering and monitoring devices.
7. An equipment evaluation study shall be performed to determine the adequacy of existing or proposed electrical equipment by tabulating and comparing the short circuit ratings with the available fault currents.
8. Problem areas or inadequacies in the proposed equipment shall be identified in the report.

1.02 REFERENCES

A. This section contains references to the following documents and they are part of this section as specified and modified. In case of conflict between the requirements of this section and those of the listed documents, the requirements of this section shall prevail.

Reference	Title
IEEE 141	Practice for Electrical Power Distribution for Industrial Plants
IEEE 242	Practice for Protection and Coordination of Industrial and Commercial Power Systems

1.03 SUBMITTAL SCHEDULE

A. The report shall be submitted with the major electrical distribution equipment. and switchgear detailed product submittal.

B. The ENGINEER reviewed report shall be corrected, revised, and resubmitted as required. The report will be reviewed along with the electrical distribution and switchgear product submittal.

C. The CONTRACTOR shall distribute the ENGINEER accepted report to the major electrical distribution equipment and switchgear manufacturers before the electrical distribution equipment and switchgear is manufactured.

D. Provide an electronic copy, on USB Drive, of the protective device coordination study results as generated by the study software.

E. The report specified herein shall be provided in accordance with Contract Documents Specifications.

PART 2 – PRODUCTS

2.01 REPORT

A. The report shall be sealed and signed by the responsible electrical engineer, summarize the short circuit analysis, protective device coordination study, potential problem issues, conclusions, and recommendations that may affect the integrity of the project power distribution system. As a minimum, the report shall include the following.

1. The equipment manufacturer's information used to prepare the study.
2. Assumptions made during the study.
3. Short circuit calculations listing short circuit levels at each bus.
4. Simplified single line diagrams generated by the study software.
5. Coordination study time-current curves including the instrument transformer ratios, model numbers of the protective relays, relay settings, and trip unit settings associated with each breaker.
6. Comparison of short circuit duties of each bus to the withstand and interrupting capacity of the equipment protecting that bus.
7. Data used as input to the report including cable impedance, source impedance, equipment ratings, equipment time-current curves etc.

PART 3 – EXECUTION

3.01 GENERAL

A. Provide the short circuit analysis and the coordination study for the electrical power distribution system using SKM System Analysis, Inc. Power Tools, or equal.

B. The studies shall be performed in accordance with IEEE Standards 141 and 242 and shall utilize the ANSI; method of short circuit analysis in accordance with ANSI C37.010.

C. The studies shall be performed using actual equipment data for the new equipment. The analysis and study shall use the equipment and protective device data provided by the electrical distribution equipment manufacturer for the project.

3.02 SHORT CIRCUIT ANALYSIS

A. The short circuit analysis and report shall include the following:

1. One-Line Diagram:
    a. Location and function of each protective device in the system, such as relays, direct-acting trips, fuses, etc.
    b. Type designation, current rating, range or adjustment, manufacturer's style and catalog number for all protective devices.
    c. Power, voltage ratings, impedance, primary and secondary connections of all transformers.
    d. Type, manufacturer, and ratio of all instrument transformers energizing each

relay.

e. Sources of short circuit currents such as utility ties, generators, synchronous motors, and induction motors.

2. Impedance Diagram:
   a. Available MVA or impedance from the power utility company.
   b. Local generated capacity impedance.
   c. Bus impedance.
   d. Transformer and/or reactor impedance.
   e. Cable impedance.
   f. Equipment impedance.
   g. System voltages.
   h. Grounding scheme (resistance grounding, solid grounding, or no grounding).
3. Calculations:
   a. Determine the paths and situations where short circuit currents are the greatest.
   b. Assume bolted faults and calculate the 3-Phase and line-to-ground short circuits of each case.
   c. Calculate the maximum and minimum fault currents.

3.03 PROTECTIVE DEVICE COORDINATION STUDY

A. The time-current characteristics of the specified and indicated protective devices shall be plotted on 5-cycle, log-log graph paper with a maximum of eight protective devices per plot. The coordination study time-current plots shall, at a minimum, include the following:
   1. Time-current for each protective relay or fuse showing graphically that the settings will provide protection and selectivity within industry standards. Each curve shall be identified, and the tap and time settings shall be specified.
   2. Time-current curves for each device shall be positioned to provide for maximum selectivity to minimize system disturbances during fault clearing. Reasonable coordination intervals and separation of characteristic curves shall be maintained.
   3. Where selectivity cannot be achieved, the report shall indicate the cause and recommend alternative solutions. Time-current curves and points for cable and equipment damage and symmetrical and asymmetrical fault currents.
   4. Circuit interrupting device operating and interrupting times.
   5. Indicate maximum fault values on the graph.
   6. Sketch of bus and breaker arrangement.

3.04 STUDY FIRM

A. The report for the short circuit analysis and protective device coordination study indicating results shall be performed, stamped, and signed by an Electrical Engineer registered in the State where the Project is located.

B. The CONTRACTOR shall provide the ENGINEER with submittal information for the electrical products used for the Project.

C. The Electrical Engineer performing the study must visit the project site after equipment is installed and modify the study as required, and resubmit the study.

END OF SECTION

SECTION 26 0583 – WIRING CONNECTIONS

PART 1 – GENERAL

1.01 SCOPE OF WORK

A. This section covers terminal blocks for control and other wiring.

1.02 SUBMITTALS

A. Products shall be submitted in accordance with these Specifications and elsewhere in the Contract Documents prior to installation.

1.03 MANUFACTURERS

A. Terminal blocks shall be Entrelec, Phoenix Contact, Weidmuller, or ENGINEER-approved equal.

B. Surge protection blocks shall be TELEMATIC, series SD, or ENGINEER-approved equal.

C. Power distribution blocks shall be Ilsco Corporation, or ENGINEER-approved equal.

PART 2 – PRODUCTS

2.01 TERMINAL BLOCKS

A. Terminal blocks shall mount on standard DIN rail, and be of the size required for conductors therein. A minimum of 25 percent spares shall be provided in each terminal box. No more than 2 conductors shall be allowed per termination. Jumper bar assemblies shall be installed for interconnecting terminal blocks, distributing power and signal commons. Terminal blocks shall be UL-rated for 600 Volts, and 30 Amps, minimum.

B. Grounding terminal blocks shall be provided for instrumentation cable shields. The terminal blocks shall have distinctive 2-color bodies, and shall be mounted to the DIN rail with metal screw down type clamps, providing a positive ground connection. One grounding terminal block shall be installed for every 2 instrument cables terminated. Grounding terminal blocks shall be UL-rated for 600 Volts, and 20 Amps, minimum.

C. Terminal blocks shall be available in a variety of colors, including red, green, blue, gray, black, yellow, and orange.

D. DIN mount fuse holders shall have blown fuse indicators for DC and AC circuits. Fuse holders shall be of the compression clamp type. Fuse holders shall be UL listed, and rated for 600 Volts. Fuse sizes shall not exceed the UL current rating for the fuse holders.

E. DIN rail shall be pre-punched, zinc bichromate plated steel. Symmetrical DIN rail shall be 35mm X 7.5mm, minimum.

F. Terminal blocks for 4 to 20 milliamp signals shall have knife disconnect switches, and accessible test points for testing and measurement of current loop signals, without the need for removing wire terminations.

2.02 SURGE PROTECTION BLOCKS (SPB)

A. Analog inputs and outputs shall be terminated at surge protection blocks (SPB). The SPBs shall be designed for a working voltage of 32 volts, and shall be fused.

B. SPBs shall provide full hybrid line to line protection, and shall have a GDT rating of 10,000 A.

C. SPBs shall be UL94 V-2 listed.

2.03 POWER DISTRIBUTION BLOCKS (PDB)

A. PDBs shall be Electro tin-plated and manufactured from high strength 6061-T6 aluminum alloy.

B. PDBs shall be UL Recognized, rated 90°C, and CSA Certified.

C. PDBs shall provide flexibility in using the connector as an in-line splice or to reduce conductor size for taps.

D. PDBs shall be rated for 600 Volts and dual rated for Copper and Aluminum Conductors.

E. PDBs shall have the sizes and ratings as shown on the Plans.

PART 3 – EXECUTION

3.01 INSTALLATION

A. Each terminal block and fuse holder shall be identified with the circuit number, or conductor number, corresponding to the identification appearing on the shop Drawings for the equipment, or system.

B. Terminal block and fuse holder markers shall be computer printed plastic-type, with permanent markings.

C. End clamps and end sections shall be installed on each terminal block and fuse holder assembly.

D. Terminal blocks for DC voltages shall be blue, and AC voltages shall be gray**.**

END OF SECTION

SECTION 26 0916 – ELECTRICAL CONTROLS AND RELAYS

PART 1 – GENERAL

1.01 SCOPE OF WORK

A. This Section includes the following:
   1. Pushbutton and Selector Switches
   2. Relays
   3. Alarms
   4. Intrinsic Safety Barriers
   5. Wireways
   6. Watthour Transducers
   7. Elapsed Time Meters and Time Clocks

1.02 REFERENCES

A. NEMA ICS 1: General Standards for Industrial Control Systems.

B. NEMA ICS 2: Standards for Industrial Control Devices, Controllers and Assemblies.

C. NEMA ICS 6: Enclosures for Industrial Controls and Systems.

D. NEMA ST 1: Standard for Specialty Transformers (Except General purpose Type).

1.03 SUBMITTALS

A. Data: A complete list of equipment and material including manufacturer's descriptive data and technical literature, performance charts, catalog cuts and installation instructions, spare parts data for each different item of equipment specified. The data shall include a complete Bill of Materials.

B. Drawings: Containing complete wiring and schematic diagrams, control diagrams, and any other details required to demonstrate that the system has been coordinated and will properly function as a unit. Drawings shall show proposed layout, anchorage, support and appurtenances of equipment and equipment relationship to other parts of the work including clearances for maintenance and operations.

C. Submit shop drawings in accordance with the Contract Documents, and NEMA ICS 1 specifications indicating control panel layouts, wiring connections and diagrams, dimensions, support points.

1.04 PROJECT RECORD DOCUMENTS

A. Submit record documents in accordance with the Contract Documents.

B. Accurately record actual locations of control equipment. Revise diagrams included in Drawings to reflect actual control device connections.

1.05 OPERATION AND MAINTENANCE DATA

A. Submit operation data in accordance with the Contract Documents.

B. Include instructions for adjusting and resetting time delay relays, timers, and counters.

C. Submit maintenance data in accordance with the Contract Documents.

D. Include recommended preventative maintenance procedures and materials.

PART 2 – PRODUCTS

2.01 PUSHBUTTONS AND SELECTOR SWITCHES

A. Pushbuttons, pilot lights and selector switches shall be of the full size, heavy-duty industrial, oil tight, 120 volts, with interchangeable pilot lights, plug-in construction, double break silver contacts, chrome plated lock rings, with modular contacts, and NEMA rating equal to that of the enclosure on which devices are installed. All components shall be flush mounted on front of panel, unless otherwise noted.

B. Provide individual legend plates for indication of switch, pushbutton, and light function (e.g., Open, Closed, Hand-Off-Auto). A list shall be submitted for review and approval

C. Pilot lights shall be high intensity LED type. Pilot lights shall have clear lenses and LED lamps colored as shown on the Plans. Common, remote push-to-test circuitry shall be provided for each control panel to simultaneously test all indicating lights on the panel using a single pushbutton when there are 10 or more lights on the panel. Control panels with less than 10 lights shall utilize individual push-to-test lights and control circuitry.

D. Pushbuttons shall be maintained or momentary as required and as shown on the Drawings. Provide extended head pushbutton for all stop functions, mushroom head for emergency stop functions, and flush head pushbuttons for all other functions. Where indicated on the Drawings pushbuttons shall be illuminated type. Provide locking mechanism for all lock out functions. Selector switches shall have black knob operator, be maintained contact type unless noted otherwise, number and arrangement as required to perform intended functions specified but not less than one double pole, double throw, double break contact per switch. Contact rating shall be compatible with AC or DC throughput current of devices simultaneously operated by the switch contact but not less than 10 amperes resistive at 120 volts AC or DC continuous.

E. Potentiometers shall be provided with operators and resistive elements of the type and quantity indicated on the Drawings and as required with legend plates indicating percent of span.

F. The above devices shall be manufactured by Allen Bradley, General Electric, or ENGINEER-approved equal.

2.02 RELAYS

A. Timing relays shall be heavy duty, 120V AC, 10 amps, solid state design, poles as required per application, -10°C to +60°C, have timing repeatability of ±2.0% of setting, and be UL listed. The range shall be determined from the control descriptions and or schematic drawings. Provide mounting accessories, as required. The timing relays shall be manufactured by Allen Bradley, Cutler Hammer, or ENGINEER-approved equal.

B. Control relays shall be of the plug-in socket base type with dust-proof plastic enclosures, with silver-cadmium oxide contacts rated 120V AC, 10 amperes, with contact arrangement and operating coils of the proper voltage as required by the control circuit sequence. Relays shall have indicating lamp to show energized state. Each relay shall have a minimum of two double pole, double throw contacts, or as required. Control relays shall be Allen Bradley, Cutler Hammer, or ENGINEER-approved equal.

C. Alternating relays shall be UL listed, 120V AC, with contacts rated for 10 amperes at 120V AC, life expectancy of 100,000 operations, load indicating LEDs, and switch for load locking and load selecting options. Alternating relays shall be manufactured by TimeMark models 261, 271, and 471, and Diversified Electronics model ARA for duplex, triplex, and quadplex alternators, or ENGINEER-approved equal.

2.03 ALARMS

A. Audible alarms shall be UL listed, 120V AC, with solid state circuitry, vibrating horn, non-metallic corrosion resistant housing, with required mounting hardware, suitable for outdoor use capable of producing 100 dB at 10 feet. The audible alarm shall be manufactured by Federal Signal model 350, Edwards model 870-EX, or ENGINEER-approved equal.

B. Beacons for interior and/or exterior locations shall be rated NEMA 4X, flashing type (90 times per minute, minimum) with a red lens. Beacons shall be as manufactured by Federal Signal, Model 225XL, or ENGINEER-approved equal.

2.04 INTRINSIC SAFETY BARRIERS

A. Intrinsic safety barriers shall permit connection of devices located in a hazardous area to other devices located in a safe area. Intrinsic safety barriers shall be EMC compliant, 10 to 35V DC, 35 mA output current, hazardous area terminals identified by blue labels, terminals accommodating conductors up to 12 AWG, ambient temperature rating of -20°C to +60°C. The intrinsic safety barriers shall be manufactured by Allen-Bradley Bulletin 937, or ENGINEER-approved equal.

2.05 WIREWAYS

A. Wireways shall be PVC, snap-in slot design, with non-slip cover. Safe area wireways shall be light gray and marked "Safe Area Wiring." Hazardous area wireways shall be intrinsic blue and marked "Hazardous Area Wiring." The wireways shall be manufactured by Panduit Corporation, or ENGINEER-approved equal.

2.06 WATTHOUR TRANSDUCERS

A. Watthour transducers for active or reactive power shall be DIN rail and surface mount, single-phase or three-phase with balanced or unbalanced load, electrically isolated input and output signals, 4 to 20 mA output signal, 0-10 mA to 0-10 A input current, 0-10 V to 0-600 VAC input voltage, 16-500 Hz selectable frequency. The watthour transducers shall be manufactured by Sineax model PQ502, or ENGINEER-approved equal.

2.07 ELAPSED TIME METERS AND TIME CLOCKS

A. Elapsed time meters shall be self-powered, non-reset, solid state counter which provides silent, accurate and noise immune operation. Elapsed time meters shall require no external power, five-year minimum battery life, rated for 120V AC power, accessories for panel mounting, nameplate below LCD display reading "HOURS", liquid crystal display with 6 digits approximately 2 inches high with 50,000-hour minimum display life and indication of sufficient battery power. The elapsed time meters shall be manufactured by Durant, Automatic Timing and Controls, or ENGINEER-approved equal.

B. Time clocks shall be microprocessor based, have 24-hour time control, up to 24 operations per day, programmable from panel face keys, skip-a-day feature allowing schedule to be skipped for one to seven days, SPDT switch contact rated at 15 amps at 120V AC, with battery carryover to maintain time and program during power outage for 275 hours. The time clocks shall be manufactured by Tork, Paragon Electric Company, or ENGINEER-approved equal.

PART 3 – EXECUTION

3.01 INSTALLATION

A. Fasteners shall be type 316 stainless steel.

B. Install devices in strict accordance with NEC requirements and per manufacturers recommendation.

C. Coordinate with other trades as necessary during installation of these devices.

3.02 ACCEPTANCE

A. All installations are subject to evaluation in accordance with NEC requirements and manufacturers recommendations. CONTRACTOR shall remove the unacceptable work and correct work at no charge to OWNER.

END OF SECTION

SECTION 26 2200 – LOW VOLTAGE TRANSFORMERS

PART 1 – GENERAL

1.01 SCOPE OF WORK

A. This section covers dry type transformers used for low voltage, single and three phase, power distribution and lighting.

1.02 SUBMITTALS

A. Products shall be submitted in accordance with these Specifications and the Contract Documents prior to installation.

1.03 QUALITY ASSURANCE

A. IEEE C57.12.01, General Requirements for Dry-Type Distribution and Power Transformers

B. NEMA ST 20, Dry-Type Transformers for General Applications

C. UL 506, Standard for Specialty Transformers

PART 2 – PRODUCTS

2.01 DISTRIBUTION - LOW VOLTAGE LIGHTING AND POWER

D. Transformers shall be premium high efficiency quiet type, and shall be installed where indicated on the Plans. The primary winding of the transformers shall have two 2.5% taps above, and below normal.

E. The transformers shall have a BIL of 10 KV with a temperature class of 185°C for transformers up to 25 KVA, and a temperature class of 220°C for larger transformers.

F. The sound level shall not exceed 44 dBa measured at 5 feet from the transformer after installation. Core and coil assemblies 30 KVA and larger, shall be mounted on rubber vibration isolators, designed to reduce harmonics generated noise.

G. Transformers shall include primary and secondary circuit protection.

H. Transformers shall be types manufactured by Square-D, Eaton, ACME, or ENGINEER-approved equal.

2.02 FERRO RESONANT ISOLATION TRANSFORMERS

A. Ferro resonant isolation transformers shall be provided where indicated on the Plans. Regulation shall be +3 percent for an input range of +10 percent. Common mode noise rejection shall be better than 120 dB with transverse mode noise rejection better than 60 dB. Voltage spike attenuation shall be better than 250:1.

B. Isolation transformers shall be as manufactured by Shape Magnetronics, Control Concepts, Inc., or ENGINEER-approved equal.

C. Transformers 15 kVA and larger must meet the energy requirements of NEMA TP-1.

PART 3 - EXECUTION

3.01 INSTALLATION

A. Transformers shall be installed as indicated on the Plans, and in accordance with the manufacturer's instructions and recommendations. CONTRACTOR shall provide painted metal wall brackets, when required.

B. Grounding shall be provided per NEC, and these Specifications.

C. A sign with 2” high black letters on a white background shall indicate the exact (not the general) location of the transformer’s primary circuit disconnect switch.

END OF SECTION

SECTION 26 2413 – SWITCHBOARDS

PART 1 - GENERAL

1.01 SCOPE

A. The CONTRACTOR shall furnish and install, where indicated, a free-standing, dead-front type low-voltage distribution switchboard, utilizing group mounted circuit protective devices as specified herein, and as shown on the contract drawings.

1.02 REFERENCES

A. The low voltage distribution switchboards and all components shall be designed, manufactured and tested in accordance with the latest applicable following standards:
   1. NEMA PB-2
   2. UL Standard 891

1.03 SUBMITTALS

A. The following information shall be submitted to the ENGINEER for review:
   1. Master drawing index
   2. Front view elevation
   3. Floor plan
   4. Top view
   5. Single line
   6. Schematic diagram
   7. Nameplate schedule
   8. Component list
   9. Conduit entry/exit locations
   10. Assembly ratings including:
      a. Short-circuit rating
      b. Continuous current
      c. Voltage
   11. Major component ratings including:
      a. Voltage
      b. Continuous current
      c. Interrupting ratings
   12. Cable terminal sizes.
   13. Busway connection
   14. Connection details between close-coupled assemblies
   15. Composite floor plan of close-coupled assemblies
   16. Key interlock scheme drawing and sequence of operations.
   17. Calculation of flash protection boundary and require personal protective equipment

B. Submit copies of the following information for record purposes:
   1. Final as-built drawings and information for items listed in Section 01 3300 Submittal Procedures.
   2. Wiring diagrams
   3. Certified production test reports
   4. Installation information
   5. Seismic certification and equipment anchorage details

C. The CONTRACTOR or the equipment manufacturer shall determine and submit the calculation to the OWNER the Arc Flash Protection Boundary (FPB) and the recommended Personal Protective Equipment (PPE). Correct arch flash hazard labels shall be provided on all equipment.

1.04 QUALIFICATIONS

A. The manufacturer of the assembly shall be the manufacturer of the circuit protective devices within the assembly.

B. For the equipment specified herein, the manufacturer shall be ISO 9000, 9001, or 9002 certified.

C. The manufacturer of this equipment shall have produced similar electrical equipment for a minimum period of five (5) years. When requested by the ENGINEER, an acceptable list of installations with similar equipment shall be provided demonstrating compliance with this requirement.

1.05 REGULATORY REQUIREMENTS

A. The low-voltage switchboard shall be UL labeled.

1.06 DELIVERY, STORAGE AND HANDLING

A. Equipment shall be handled and stored in accordance with manufacturer's instructions. One (1) copy of these instructions shall be included with the equipment at time of shipment.

1.07 OPERATION AND MAINTENANCE MANUALS

A. Copies of the equipment operation and maintenance manuals shall be provided. Operation and maintenance manuals shall include the following information:
   1. Instruction books and/or leaflets
   2. Recommended renewal parts list
   3. Drawings and information required by section 1.04.

PART 2 - PRODUCTS

2.01 MANUFACTURERS

A. Cutler-Hammer

B. General Electric

C. ENGINEER-approved equal

2.02 RATINGS

A. The assembly shall be rated to withstand mechanical forces exerted during short-circuit rating as indicated on the Plans.

B. Voltage rating to be as indicated on the Plans.

2.03 CONSTRUCTION

A. Switchboard shall consist of the required number of vertical sections bolted together to form a rigid assembly. The sides and rear shall be covered with removable bolt-on covers. All edges of front covers or hinged front panels shall be formed. Provide adequate ventilation within the enclosure.

B. All sections of the switchboard shall be rear aligned with depth as shown on the drawings. All protective devices shall be group mounted. Devices shall be front removable and load connections front accessible enabling switchboard to be mounted against a wall.

C. The assembly shall be provided with adequate lifting means.

D. The switchboard shall be equal to Cutler-Hammer type Pow-R-Line C utilizing the components herein specified and as shown on the drawings.

E. The manufacturer shall determine and label the Flash Protection Boundary (FPB) and required Personal Protective Equipment (PPE).

2.04 BUS

A. All bus bars shall be silver-plated copper. Main horizontal bus bars shall be mounted with all three phases arranged in the same vertical plane. Bus sizing shall be based on NEMA standard current density of 1000 amps per square inch.

B. Provide a full capacity neutral bus where a neutral bus is indicated on the drawings.

C. A copper ground bus (minimum ¼-inch x 2 inches), shall be furnished firmly secured to each vertical section structure and shall extend the entire length of the switchboard.

D. All hardware used on conductors shall be high-tensile strength and zinc-plated. All bus joints shall be provided with conical spring type washers.

2.05 WIRING/TERMINATIONS

A. Small wiring, necessary fuse blocks and terminal blocks within the switchboard shall be furnished as required. Control components mounted within the assembly, such as fuse blocks, relays, pushbuttons, switches, etc., shall be suitably marked for identification corresponding to appropriate designations on manufacturers wiring diagrams. Wiring diagrams shall contain terminal and wire numbers.

B. Mechanical-type terminals shall be provided for all line and load terminations suitable for copper or aluminum cable rated for 75°C of the size as indicated on the Plans.

C. Lugs shall be provided in the incoming line section for connection of the main grounding conductor. Additional lugs for connection of other grounding conductors shall be provided as indicated on the Plans.

D. All control wire shall be type SIS, bundled and secured with nylon ties. Insulated locking spade terminals shall be provided for all control connections, except where saddle type terminals are provided integral to a device. All current transformer secondary leads shall first be connected to conveniently accessible short-circuit terminal blocks before connecting to any other device. All groups of control wires leaving the switchboard shall be provided with terminals blocks with suitable numbering strips. Provide wire markers at each end of all control wiring.

2.06 MOLDED CASE PROTECTIVE DEVICES

A. Main and feeder protective devices shall be molded case circuit breakers with inverse time and instantaneous tripping characteristics and shall have ground fault protection where indicated, or as required by NEC.

B. Circuit breakers shall be operated by a toggle-type handle and shall have a quick-make/quick-break over-center switching mechanism that is mechanically trip-free. Automatic tripping of the breaker shall be clearly indicated by the handle position. Contacts shall be non-welding silver alloy, and arc extinction shall be accomplished by means of DE-ION arc chutes. A push-to-trip button on the front of the circuit breaker shall provide a local manual means to exercise the trip mechanism.

C. Circuit breakers shall have a minimum symmetrical interrupting capacity as indicated on the Drawings.

D. Where indicated on the Drawings, circuit breakers shall be UL listed for series application.

E. Where indicated on the Drawings, circuit breakers shall be current limiting.

F. Circuit breakers 400 ampere frame and below shall be thermal-magnetic trip units and inverse time-current characteristics. Circuit breakers 600-ampere through 1200-ampere frame shall be microprocessor-based RMS sensing trip units. Circuit breakers 1600-ampere through 2500-ampere frame shall be microprocessor-based RMS sensing trip units.

G. On circuit breakers 800 amps and larger, a trip button and integral current reading display shall be provided

H. Where indicated, provide circuit breakers UL listed for application at 100% of their continuous ampere rating in their intended enclosure.

I. Provide Lamicoid labels for feeder circuit breakers that provide a descriptive name, as identified on the Drawings, of the load being served. Include circuit number and circuit breaker trip rating.

2.07 ACCESSORIES

A. Provide shunt trips, bell alarms and auxiliary switches as shown on the contract drawings.

B. Circuit Breaker Energy Monitoring.

C. Centralized Local Monitoring.

D. Provide transient voltage surge suppression as required in these Specifications and indicated on the Plans.

2.08 MISCELLANEOUS DEVICES

A. Key interlocks shall be provided as indicated on the Plans or required for safe equipment operation.

B. Control power transformers with primary and secondary protection shall be provided, as indicated on the Plans, or as required for proper operation of the equipment.

C. Each section of the switchboard shall be provided with a space heater, thermostatically controlled. Power for the space heaters shall be obtained from a control power transformer within the switchboard. Supply voltage shall be 120 volts AC.

2.09 ENCLOSURES

A. Indoor NEMA 1 Enclosure

B. Outdoor NEMA 3R Enclosure
   1. Outdoor enclosure shall be non-walk-in and meet applicable NEMA 3R UL requirements.
   2. Enclosure shall have flat roof sloping roof downward toward rear.
   3. Outer sections shall be the same widths as indoor structures, except each end of the outdoor assembly shall have an end trim.
   4. The enclosure shall be provided with bolt-on rear covers for each section.
   5. Doors shall have provisions for padlocking.
   6. Ventilating openings shall be provided complete with replaceable fiber glass air filters.
   7. Provide space heaters thermostatically controlled for each structure with adequate wattage to prevent the accumulation of moisture.
   8. Power for space heaters, lights and receptacles shall be obtained from a control power transformer within the switchboard. Supply voltage shall be 120 volts AC.

2.10 NAMEPLATES

A. Engraved nameplates, mounted on the face of the assembly, shall be furnished for all main and feeder circuits as indicated on the Plans. Nameplates shall be laminated plastic, black characters on white background. Characters shall be 1/2 inches high, minimum. Nameplates shall give item designation and circuit number as well as frame ampere size and appropriate trip rating. Furnish master nameplate giving switchboard designation, voltage ampere rating, short-circuit rating, manufacturer's name, general order number, and item number.

B. Control components mounted within the assembly, such as fuse blocks, relays, pushbuttons, switches, etc., shall be suitably marked for identification corresponding to appropriate designations on manufacturer's wiring diagrams.

2.11 FINISH

A. All exterior and interior steel surfaces of the switchboard shall be properly cleaned and provided with a rust-inhibiting phosphatized coating. Color and finish of the switchboard shall be ANSI 61 light gray.

PART 3 - EXECUTION

3.01 FACTORY TESTING

A. The following standard factory tests shall be performed on the equipment provided under this section. All tests shall be in accordance with the latest version of ANSI and NEMA standards.

1. The switchboard shall be completely assembled, wired, adjusted, and tested at the factory. After assembly, the complete switchboard will be tested for operation under simulated service conditions to assure the accuracy of the wiring and the functioning of all equipment. The main circuits shall be given a dielectric test of 2,200 volts for one (1) minute between live parts and ground, and between opposite polarities. The wiring and control circuits shall be given a dielectric test of 1,500 volts for one (1) minute between live parts and ground.

B. The manufacturer shall provide certified copies of factory test reports.

3.02 INSTALLATION

A. The CONTRACTOR shall install all equipment per the MANUFACTURER'S instructions, Contract Documents, and National Electrical Code.

B. The assembly shall be provided with adequate lifting means and shall be capable of being moved into installation position and bolted directly to the floor without the use of floor sills provided the floor is level to 1/8-inch per 3-foot distance in any direction. All necessary hardware to secure the assembly in place shall be provided by the CONTRACTOR.

3.03 FIELD INSPECTION AND TESTS

A. Provide the services of an authorized representative of the equipment manufacturer to make site visits to supervise the field testing and installation to be performed by the CONTRACTOR. The manufacturer’s representative shall state in writing that the equipment has been correctly installed and tested.

B. Perform the following minimum tests and checks before energizing equipment:

1. Megger terminals and busses for grounds after disconnecting devices sensitive to megger voltage.
2. Inspect all mechanical and electrical interlocks for proper operation.

C. Perform any other tests recommended by the equipment manufacturer and other tests as

described in this specification.

D. The manufacturer's representative shall supply results of all factory and field tests in writing for submittal to the ENGINEER.

E. The manufacturer shall supply test results to confirm that the assembly design has been tested to substantiate conformance with the applicable ANSI and NEMA Standards.

F. Touch-up paint all chips and scratches with manufacturer supplied paint and leave remaining paint with OWNER.

G. The CONTRACTOR shall perform field adjustments of the protective devices as required to place the equipment in final operating condition. Necessary field settings of devices, adjustments, and minor modifications to equipment to accomplish operational condition shall be carried out by the CONTRACTOR at no additional cost to the OWNER.

END OF SECTION

SECTION 26 2416 – PANELBOARDS

PART 1 – GENERAL

1.01 SCOPE OF WORK

A. This section covers electrical panelboards.

1.02 SUBMITTALS

A. Products shall be submitted in accordance with these Specifications and the Contract Documents prior to installation.

B. Panelboard submittal shall include:
   1. Layout and dimensions with alphanumeric designation
   2. Branch circuit breaker sizes and types
   3. AIC rating
   4. Bus sizes and ratings
   5. Cable terminal sizes
   6. Product sheets
   7. Installation information
   8. Seismic certification and equipment anchorage details

1.03 QUALITY ASSURANCE

A. NEMA PB-1, Panelboards

B. NEC

C. UL67, Panelboards

PART 2 – PRODUCTS

2.01 PANELBOARDS

A. Dead-front panelboards, including lighting distribution and control panels, shall be furnished and installed as indicated on the Plans. Buses shall be copper. Mounting and type of enclosures shall be as indicated on the Plans. Where not indicated, indoor enclosures shall be NEMA 12 and outdoor enclosures shall be NEMA 3R. The minimum interrupting capacity of any device shall be as indicated on the Plans.

B. Protective devices shall be replaceable without disturbing adjacent units. Wire connectors shall be suitable for wire sizes indicated. Branch circuits shall be numbered as indicated on the Plans, and a complete typed circuit schedule shall be furnished under a transparent cover, and affixed to the panel. Phase busing shall be full height without reduction. Full size neutral bars shall be included, and shall have suitable lug for each outgoing circuit requiring neutral connection. Spaces for future protective devices provided in lighting panels shall be bused for the maximum device that can be fitted into them.

C. Panelboards shall be finished with a primer, rust resistant phosphate undercoat and two coats of oven baked enamel with finish ANSI grey. Doors shall not uncover any live parts, and shall be hinged and have latches that require no tool to operate. Panelboard doors shall be lockable. Lock and two keys shall be furnished.

D. Each panelboard shall have, on the outside of the door, a lamicoid nameplate with ¾-inch letters as specified elsewhere in these Contract Documents.

E. Panelboards shall be manufactured by Cutler Hammer, General Electric, or ENGINEER-approved equal.

F. Panelboards shall be service entrance rated where required, and as shown on the Plans.

G. Panelboards shall be bolt-on type and provided with spare breakers as indicated on the Plans.

H. Panelboards shall include a typed circuit directory located inside the panel.

I. Surge Protective Devices (SPD)
   1. The SPD shall be per these Specifications.
   2. Surge Protective Devices (SPD) shall be designed to provide transient voltage protection for a service entrance panelboard.
   3. SPD shall be rated for the voltage and phase service of the panel at 120 kA per phase.

PART 3 – EXECUTION

3.01 INSTALLATION

A. Panelboards shall be installed as indicated on the plans and according to manufacturer's instructions.

B. Provide grounding per NEC and these Specifications.

C. CONTRACTOR shall verify all NEC clearance requirements prior to installation.

END OF SECTION

SECTION 26 2726 – WIRING DEVICES

PART 1 – GENERAL

1.01 SUMMARY

A. Section Includes:
   1. Light switches, receptacles, device plates, dimmers, plug-in strips, and tele-power poles.

1.02 QUALITY ASSURANCE

A. Device shall be UL-rated when applicable

1.03 SUBMITTALS

A. Shop Drawings: Refer to the Contract Documents and these Specifications.

PART 2 – PRODUCTS

2.01 ACCEPTABLE MANUFACTURERS

A. Subject to compliance with the Contract Documents, the following manufacturers are acceptable:
   1. Light switches (except explosion proof):
      a. Hubbell
      b. Slater
      c. P&S
      d. Arrow Hart
      e. General Electric
      f. Leviton
      g. Or ENGINEER-approved equal
   2. Explosion proof light switches:
      a. Crouse-Hinds
      b. Appleton Electric Co.
      c. Killark
      d. Or ENGINEER-approved equal
   3. Door switches:
      a. General Electric
      b. Slater
      c. P&S
      d. Arrow Hart
      e. Micro-switch
      f. Or ENGINEER-approved equal
   4. Receptacles (except explosion proof):
      a. Hubbell
      b. Slater
      c. P&S
      d. Arrow Hart
      e. General Electric
      f. Leviton
      g. Or ENGINEER-approved equal
   5. Explosion proof receptacles:
      a. Crouse-Hinds
      b. Appleton Electric Co.

c. Killark
d. Or ENGINEER-approved equal

6. Welding receptacles:
   a. Crouse-Hinds
   b. Appleton Electric Co.
   c. Or ENGINEER-approved equal
7. Tele-power poles:
   a. Wiremold
   b. Walker
   c. Or ENGINEER-approved equal
8. Dimmers:
   a. Lutron
   b. General Electric
   c. P&S
   d. Or ENGINEER-approved equal
9. Plug-in strip:
   a. Wiremold
   b. Walker
   c. Or ENGINEER-approved equal

2.02 MATERIALS

A. Light Switches for Unclassified Areas:
   1. Toggle type, quiet action, specification grade with grounding terminal
   2. Back and side wired
   3. Solid silver cadmium oxide contacts
   4. One-piece switch arm rated 20 A, 120/277 V AC
   5. UL listed
   6. Color: Ivory
   7. Wall plate: Type 304 stainless steel
   8. Type: As indicated on Drawings

B. Receptacles for Unclassified Areas:
   1. Straight blade, grounding type, specification grade
   2. Back and side wired with wrap-around bridge
   3. Rated 20 A, 125 V AC
   4. UL listed
   5. Color:
      a. For use on normal power: Ivory
      b. For use on UPS systems: Red
      c. For use on isolated ground systems: Orange
   6. Wall plate: Type 304 stainless steel
   7. Type: As indicated on Drawings

C. Light Switches for Wet Areas:
   1. Presswitch type, quiet action, specification grade, with grounding terminal
   2. Back and side wired
   3. Solid silver cadmium oxide contacts
   4. One-piece switch arm rated 20 A, 120/277 V AC
   5. UL listed
   6. Color: Ivory
   7. Wall plate: Gray weatherproof presswitch type
   8. Type: As indicated on Drawings

D. Receptacles for Wet Areas:
   1. Straight blade, grounding type, specification grade
   2. Back and side wired with wrap around bridge
   3. Rated 20 A, 125 V AC
   4. UL listed
   5. Color: Ivory
   6. Wall plate: Weatherproof, cast aluminum, UL listed, WDL open and closed
   7. Type: As indicated on Drawings

E. Ground Fault Circuit Interrupter Receptacles:
   1. Straight blade, grounding type, specification grade
   2. Rated 20 A, 125 V AC
   3. UL listed
   4. Test and reset buttons
   5. Wall plate: Indoor or weatherproof as required
   6. Feed-through type

F. Light Switches for Corrosive Areas:
   1. Corrosion-resistant NEMA 4X enclosure with switch consisting of:
      a. Fiberglass reinforced polyester enclosure
      b. Fiberglass reinforced polyester gasketed wall plate with built-in toggle lever switch with stainless steel shaft
      c. Grounding bushing
      d. Rated 20 A, 125 V AC
      e. UL listed
      f. Type: As indicated on Drawings
      g. Color: Yellow
   2. Optional: Corrosion-resistant enclosure and switch consisting of:
      a. Cast copper-free aluminum "FS" or "FD" ridge type hub box
      b. Toggle type, quiet action, specification grade with grounding terminal
      c. Rated 20 A, 125 V AC with solid silver cadmium oxide contacts
      d. UL listed
      e. Neoprene gasket
      f. Cast aluminum cover with stainless steel screws and lever to activate switch
      g. Type: As indicated on Drawings
      h. Color: Yellow

G. Receptacles for Corrosive Areas:
   1. Corrosion-resistant straight blade, grounding type, specification grade
   2. Back and side wired with wrap-around bridge
   3. Rated 20 A, 125 V AC
   4. UL listed
   5. Color: Yellow
   6. Box: "FS" or "FD" ridge type cast hub box of copper-free aluminum
   7. Gasket: Neoprene
   8. Wall plate: Weatherproof, cast aluminum, UL listed, WDL open or closed
   9. Type: As indicated on Drawings

H. Explosion proof Light Switches for Use in Hazardous Areas:
   1. Explosion proof, UL listed for Class I, Division 1 and 2, Groups B, C, and D; and Class II, Division 1 and 2 areas, Groups E, F, and G.
   2. EDS factory sealed
   3. Malleable iron body and cover

4. Aluminum sealing chamber
5. Front operated handle with stainless steel shaft
6. Rated 20 A, 125 V AC
7. With grounding screw
8. Type: As indicated on Drawings

I. Explosion proof Receptacles for Use in Hazardous Areas:
1. Explosion-proof, UL listed for Class I, Division 1 and 2, Groups B, C, and D; and Class II, Division 1 and 2, Groups F and G.
2. Factory-sealed malleable iron receptacle with spring-loaded cover
3. Malleable iron mounting box
4. Rated 20 A, 125 V AC
5. "Dead-front" construction requiring plug to be inserted and rotated to activate receptacle
6. Type: As indicated on Drawings.

J. Welding Receptacles: 60 A, 480 V, 3 pole, 4 wire, grounding type

K. Plug-In Strip: Surface steel raceway plug-in strip with single 15 A, 125 V, 3 wire grounding-type receptacles spaced 18 IN on center.
1. Prewired with two #12 TW and one #12 TW green insulated ground
2. Minimum 1-1/4 IN wide x 3/4 IN deep
3. Suitable fittings and snap-in cover
4. Finish:
   a. Stainless steel
5. Receptacle color:
   a. For use on normal power: Ivory
   b. For use on UPS systems: Red
   c. For use on isolated ground systems: Orange

PART 3 – EXECUTION

3.01 INSTALLATION

A. Mount devices where indicated on the Drawings and as scheduled in these Specifications.

B. Surface mount receptacles and light switches in concrete construction.

C. In masonry and metal stud construction, recess mount receptacles and light switches unless device precludes recessed mounting or unless otherwise noted on the Drawings.

D. Where more than one receptacle is installed in a room, they shall be symmetrically arranged.

E. Set switches and receptacles plumb and vertical to the floor.

F. Set recess-mounted switches and receptacles flush with face of walls.

G. Do not connect dimmers to loads in excess of 80 percent of the rating of the dimmer.

H. Provide blank plates for empty outlets.

END OF SECTION

SECTION 26 2733 – POWER DISTRIBUTION UNITS

PART 1 - GENERAL

1.01 DESCRIPTION

A. This Section outlines the electrical work for underground or overhead power service and power distribution.

B. Power Service: The underground or overhead service shall be complete and as shown on the Drawings. The service installation shall conform with the power company service requirements.

C. Distribution: The power distribution system shall include equipment installations and underground or overhead wiring installations as shown on the Drawings.

1.02 SUBMITTALS

A. Submit for the ENGINEER's approval material lists, shop drawings, factory test reports, and technical data to the extent required in these Specifications and contract documents.

PART 2 - PRODUCTS

2.01 GENERAL

A. Provide all the equipment and materials, and complete all of the power service, power distribution and grounding installations as indicated, specified and required. Sizes of equipment shown on the Drawings and space allowed for the equipment are based on equipment manufactured by only one of the listed acceptable manufacturers. The manufacturers and models listed in this Section of the Specifications are acceptable providing they conform to the Specifications and that the equipment and materials provided fit properly in the available space.

2.02 SERVICE EQUIPMENT

A. Provide the metal enclosed, service equipment as shown on the Drawings, and in accordance with the power company service requirements. The low voltage equipment shall be manufactured by Square D, Cutler Hammer, General Electric, Siemens, Allen Bradley, or ENGINEER-approved equal. Service equipment shall be part of the distribution panelboard as shown on the Drawings. All sections must meet Local Power Utility requirements.

B. Metering Section shall be full height, free standing and equipped with meter sockets, copper busses, main circuit breaker and ground fault protection as indicated. The meter sockets shall be provided for the power company self contained meter or meters that shall be connected to instrument transformers as required. Must meet Local Power Utility requirements.

C. Pull Section shall be totally metal enclosed, full height, free standing and equipped with copper buses and connectors for the underground service conductors. Must meet Local Power Utility requirements.

D. A main circuit breaker shall be used as a service disconnect in the service equipment as shown on the Drawings.

E. Nameplates shall be provided for the service equipment as required in these Specifications.

F. Double hasp shall be attached on a gasketed hinged door of outdoor equipment for two padlocks.

G. Grounding shall meet the requirements of these Specifications.

H. Service equipment shall be labeled with available fault current in accordance with NEC 110.24(a).

PART 3 - EXECUTION

3.01 GENERAL

A. Provide all the equipment installations and wiring installations including connections and interconnections for the power service and distribution as indicated, specified and required. Assure proper fits for all equipment and materials in the spaces shown on the Drawings.

B. Earthwork, Concrete and Painting: The required work for excavations, backfills, concrete and painting shall be provided for the electrical installations.
   1. Earthwork shall be performed for handholes, pull boxes, underground conduits, poles, guys, grounding, equipment foundations and supports as indicated and specified.
   2. Concrete shall be provided for electrical equipment foundations and supports, and conduit encasements as indicated and specified in these Specifications.
   3. Painting shall be provided for all installations having unfinished surfaces as specified in. Field damaged factory finishes on equipment shall be touched-up with paint that is equal in quality and color to the original factory finish.

C. Handholes and Pull Boxes: Precast concrete handholes and pull boxes shall be installed in excavations as shown on the Drawings and as required.
   1. Accessories shall be installed, which include pull eyes and required hardware.
   2. Covers shall be installed on all handholes and pull boxes.

D. Service Equipment: Install the metal enclosed service equipment and wiring as indicated, specified and required.
   1. Equipment shall be installed level and securely attached to the concrete foundation with anchor bolts. The sections shall be joined together with bolts, washers and nuts to form a unit assembly.
   2. Wiring installations shall be complete and in accordance with the power company service requirements.
   3. Nameplates shall be laminated plastic and attached to clean surfaces of the metal enclosures with an adhesive or equal.

E. Grounding: Install all the equipment, materials and wiring to complete the equipment, structural, lightning and system grounding installations as shown on the Drawings, specified and required.

F. Panelboards and Switchboards: Install the metal enclosed panelboards and distribution switchboards as indicated, specified and required.
   1. Equipment shall be installed level and securely attached to the concrete foundations, floors and walls with anchor bolts.
   2. Wiring installations shall be complete, including all connections.
   3. Nameplates shall be laminated plastic, and attached to clean surfaces of the metal enclosures with an adhesive.

G. Automatic Transfer Switch: The Automatic Transfer Switch described in Specification Section 26 3600 shall be supplied with the Service Entrance equipment.

H. Checking, Adjusting and Testing: Provide all checking, adjusting and testing operations on equipment and complete installations as specified in these Specifications.

END OF SECTION

SECTION 26 2813 – FUSES

PART 1 - GENERAL

1.01 SCOPE OF WORK

A. This section covers the requirements for protective fusing on this project. The CONTRACTOR shall furnish and install fuses and fuse holders per the Drawings and equipment manufacturers recommendations.

B. This specification includes the general requirements for various types of fuses whether they are shown on the Drawings or not. If fusing is required by codes or manufacturers recommendations, but not shown on the Drawings, this specification shall apply to the type of fusing provided by the CONTRACTOR.

C. Types of fuses specified in this section include the following:
   1. Class L time-delay
   2. Class L fast-acting
   3. Class RK1 time-delay
   4. Class RK1 and Class J current-limiting
   5. Class RK5 time-delay
   6. Class K5 time-delay, noncurrent-limiting
   7. Class T current-limiting

1.02 QUALITY ASSURANCE

A. The fuse manufacturer's facilities shall be ISO 9001 certified.

1.03 CODES AND STANDARDS

A. UL Compliance and Labeling: Comply with applicable provisions of UL 198D, "High-Interrupting-Capacity Class K Fuses". Provide over-current protective devices which are UL-listed and labeled.

B. NEC Compliance: Comply with NEC as applicable to construction and installation of fusible devices.

C. ANSI Compliance: Comply with applicable requirements of ANSI C97.1 "Low-Voltage Cartridge Fuses 600 Volts or Less".

1.04 SUBMITTALS

A. Product Data: Submit manufacturer's technical product data on fuses, including specifications, electrical characteristics, installation instructions, furnished specialties and accessories in accordance with these Specifications and the Contract Documents. In addition, include voltages and current ratings, interrupting ratings, current limitation ratings, time-current trip characteristic curves, and mounting requirements.

1.05 MANUFACTURERS

A. Subject to compliance with requirements, manufacturers offering fusible devices which may be incorporated in the work include, but are not limited to, the following: Bussmann, Gould-Shawmut, Reliance, or ENGINEER-approved equal.

PART 2 – PRODUCTS

2.01 GENERAL

A. Except as otherwise indicated, provide fuses of types, sizes, ratings, and average time-current and peak let-through current characteristics indicated, which comply with manufacturer's standard design, materials, and constructed in accordance with published

product information, and with industry standards and configurations.

2.02 CLASS L TIME-DELAY FUSES

A. Provide UL Class L time-delay fuses rated 600 volts, 60 Hz, with 200,000 RMS symmetrical interrupting current rating for protecting transformers, motors, and circuit-breakers.

2.03 CLASS L FAST-ACTING FUSES

A. Provide UL Class L fast-acting fuses rated 600 volts, 60 Hz, with 200,000 RMS symmetrical interrupting current rating for protecting service entrances and main feeder circuit-breakers.

2.04 CLASS RK1 TIME-DELAY FUSES

A. Provide UL Class RK1 time-delay fuses rated 600 volts, 60 Hz, with 200,000 RMS symmetrical interrupting current rating for protecting motors and circuit-breakers.

2.05 CLASS RK1 CURRENT-LIMITING FUSES

A. Provide UL Class RK1 current-limiting fuses rated 250 volts, 60 Hz, with 200,000 RMS symmetrical interrupting current rating for protecting circuit-breakers.

2.06 CLASS J CURRENT LIMITING FUSES

A. Provide UL Class J current-limiting fuses rated 600 volts, 60 Hz, with 200,000 RMS symmetrical interrupting current rating.

2.07 CLASS RK5 TIME-DELAY FUSES

A. Provide UL Class RK5 time-delay fuses rated 600 volts, 60 Hz, with 200,000 RMS symmetrical interrupting current rating for protecting motors.

2.08 CLASS K5 ONE-TIME FUSES

A. Provide UL Class K5 one-time fuses rated 250 volts, 60 Hz, with 100,000 RMS symmetrical interrupting current rating for protecting non-inductive loads.

2.09 CLASS T FUSES

A. Provide UL Class T fuses rated 600 volts, 60 Hz, with 200,000 RMS symmetrical interrupting current rating for protection of physically small devices.

PART 3 – EXECUTION

3.01 INSTALLATION

A. Fuse types and sizes shall be as indicated on the Plans. Fuses shall be installed in accordance with the National Electric Code (NEC) requirements and the manufacturer's written instructions.

B. Install fuses in proper fuse holders.

C. Where fuses are installed in the motor starters, fuses shall be sized to match the actual motor full load current.

D. Where fuses are installed in disconnect switches at HVAC units, the fuse sizes shall be sized to meet the HVAC manufacturer's requirements.

E. Fuses for control transformers shall be sized in accordance with the National Electrical Code.

F. Fuses shall be installed with the labels clearly visible.

3.02 FIELD QUALITY CONTROL

A. Prior to energizing fusible devices, test devices for circuit continuity and for short-circuits.

3.03 SPARE PARTS

B. Furnish 3 spare fuses of each size and type.

END OF SECTION

SECTION 26 2816 – ENCLOSED SWITCHES AND CIRCUIT BREAKERS

PART 1 – GENERAL

1.01 SCOPE OF WORK

A. The CONTRACTOR shall furnish and install, low voltage circuit breakers and enclosed disconnect switches, as indicated on the Drawings, and specified herein.

1.02 SUBMITTALS

A. Products shall be submitted in accordance with these Specifications and elsewhere in the Contract Documents prior to installation.

1.03 QUALITY ASSURANCE

A. The breaker manufacturer's facilities shall be ISO 9001 certified.

PART 2 – PRODUCTS

2.01 GENERAL

A. Circuit breakers shall be manufactured by Cutler-Hammer, Allen-Bradley, General Electric, or ENGINEER-approved equal.

B. Circuit breaker frame, trip, short circuit, and interruption ratings shall be as indicated on the Drawings, except that they shall be coordinated with the ratings of the equipment actually furnished, and shall be modified where necessary to suit the equipment. Circuit breakers to be used in motor control centers shall be as indicated on the Drawings. Where no indication of type is given on the Drawings circuit breakers protecting motors shall be motor circuit protectors, and other circuit breakers shall be molded case type.

C. Circuit breaker for mounting in motor control centers, or for separate mounting shall be of the air-break type, quick-make and quick-break, 600 volt, with number of poles as indicated on the Drawings.

D. Each pole of the circuit breaker shall provide inverse time delay, and instantaneous circuit protection.

E. The breakers shall be operated by a handle, and shall have a switching mechanism that is mechanically trip free from the handle, so that the contacts cannot be held closed against short circuits, and abnormal currents. Tripping due to overload, or short circuit shall be clearly indicated by the handle automatically assuming a position between the manual ON and OFF positions. Latch surfaces shall be ground and polished. Poles shall be constructed so that they open, close, and trip simultaneously.

F. Breakers must be completely enclosed in a molded case. Non-interchangeable trip breakers shall have their covers sealed; interchangeable trip breakers shall have the trip unit sealed to prevent tampering. Ampere ratings shall be clearly visible. Contacts shall be non-welding silver alloy. Arc extinction must be accomplished by means of arc chutes. The minimum interrupting ratings of the circuit breakers shall be at least equal to the available short circuit current at the line terminals.

G. Circuit breakers shall conform to the applicable requirements of NEMA Standards Publication No. AB1.

H. Molded case circuit breakers shall be ambient temperature compensating that provides inverse time delay overload and instantaneous short circuit protection by means of a thermal-magnetic element. Compensation shall be accomplished by a secondary bi-metal that will allow the breaker to carry rated current between 25°C and 50°C with tripping characteristics that are approximately the same throughout this temperature range.

I. On breakers with interchangeable, thermal, adjustable magnetic trip, the accessibility and position of the adjustment knob shall not be changed from those on the standard breaker.

J. Unless mounted in a switchboard, or panelboard, circuit breakers shall be housed in a NEMA rated enclosure as described elsewhere in these specifications.

K. Provide circuit breakers with shunt trip mechanisms where shown on the Drawings.

2.02 DISCONNECT SWITCHES

A. Disconnect switches shall be heavy-duty safety switches with a quick-make, quick-break operating mechanism, full cover interlock, and indicator handle. Disconnect switches shall be furnished with fuses of the size indicated on the Plans. One set of spare fuses shall be furnished for each fused disconnect switch. Disconnect switches shall be NEMA type HD heavy duty construction, UL 98 listed.

B. Enclosures shall be rated NEMA 12 for indoor use, NEMA 4X for corrosive areas and for outdoor use, unless otherwise indicated on the Plans.

C. Disconnect switch handle shall be padlockable.

D. Disconnect switches in corrosive areas as indicated on the Plans, shall be NEMA 4X, 316 stainless steel.

E. Disconnect switches shall be manufactured by Square D, Cutler Hammer, Allen-Bradley, General Electric, Eaton, or equal.

F. Disconnect switches for motors shall be rated for 125% of the motor HP or as indicated on the plans.

PART 3 – EXECUTION

3.01 INSTALLATION

A. Circuit breakers and disconnect switches shall be installed as indicated on the Drawings and per manufacturer's instructions.

END OF SECTION

SECTION 26 2913 – ENCLOSED MOTOR CONTROLLERS

PART 1 - GENERAL

1.01 SCOPE OF WORK

A. A motor controller is any device or group of devices normally used to start and stop a motor by making and breaking the motor circuit current. The motor controller and devices that make up the motor controller shall be governed by items indicated on the Plans, or elsewhere within these specifications.

B. Types of motor controllers specified in this section include the following:
   1. Combination.
   2. Fractional HP manual.
   3. Solid-state reduced voltage starter (SSS)

C. This section applies to motor controllers rated 480 V and below.

1.02 CODE AND STANDARDS

A. Electrical Code Compliance: Comply with applicable local electrical code requirements of the authority having jurisdiction and NEC Articles 220, 250, and 430, as applicable to installation, and construction of motor controllers.

B. NFPA Compliance: Comply with applicable requirements of NFPA 70E, "Standard for Electrical Safety in the Workplace."

C. UL Compliance: Comply with applicable requirements of UL 486A and B, and UL 508, pertaining to installation of motor controllers. Provide controllers and components which are UL-listed and labeled.

D. NEMA Compliance: Comply with applicable requirements of NEMA Standard ICS 2, "Controllers, Contactors and Overload Relays" and Pub No. 250, "Enclosures for Electrical Equipment (1000 Volts Maximum)," pertaining to motor controllers and enclosures.

1.03 MAINTENANCE DATA

A. Submit maintenance data and parts list for each motor controller and component; including troubleshooting maintenance guide. Also, provide product data and shop drawings in a maintenance manual, in accordance with requirements of these Specifications and the Contract Documents.

1.04 SUBMITTALS

A. Product Data: Submit manufacturer’s data and installation instructions on motor controllers.

B. Shop Drawings: Submit shop drawings of motor controllers showing accurately scaled equipment locations and spatial relationships to associated motors and equipment.

C. Wiring Diagrams: Submit power and control wiring diagrams for motor controllers showing connections to electrical power panels, feeders, and equipment.

D. Submittal documents shall be provided in accordance with these Specifications and other requirements of the Contract Documents.

PART 2 - PRODUCTS

2.01 GENERAL

A. Except as otherwise indicated, provide motor controllers and ancillary components that comply with manufacturer's standard materials, design, and construction in accordance with published product information, and as required for a complete installation.

2.02 ELECTRONIC OVERLOAD RELAYS

A. Electronic overload relays shall be provided with the motor starters. The overload relay shall be a 3-pole solid state device that monitors all 3 phases of the motor current. The unit shall detect overcurrent, phase current imbalance, phase loss, and trip after an adjustable time from 3 seconds to 30 seconds.

B. The overload relays shall be field selectable to Class 10, 20 or 30, ambient temperature compensated, and shall have an LED trip indicator. The unit shall have a manual and automatic reset feature, and a normally closed contact for control.

C. Each module shall provide individual trip indication and reset for each trip condition, visible without opening the distribution panelboard compartment door. Provide a normally open auxiliary contact for remote trip indication.

D. Solid state circuits shall be completely protected from damage arising from line transients and voltage spikes.

E. Electronic Overload Relays shall be as manufactured by Allen-Bradley, Cutler Hammer, General Electric, or ENGINEER-approved equal.

2.03 MAGNETIC MOTOR STARTERS

A. Starters, Size 2 and larger, shall have arc quenchers on all load breaking contacts. Starters shall be suitable for the horsepower ratings specified. The CONTRACTOR shall verify the motor ratings, and coordinate the starter and overload trip ratings with the actual horsepower ratings of the motors installed. Extended overload reset buttons shall be mounted so as to be accessible for operation without opening the door of the enclosure.

B. Magnetic contactors shall be factory adjusted and shall be chatter free. Overload relays shall be electronic, as specified herein.

C. Starters shall be furnished complete with a 120-volt secondary control power transformer. Control circuit fuses shall be furnished both on the primary and secondary of the control circuit transformer. If there is no transformer, all live control power supply wires shall be fused.

D. Starters shall be designed to operate in ambient temperatures up to 60 C.

E. The minimum size starter shall be NEMA Size 1.

F. Magnetic Motor Starters shall be manufactured by Allen-Bradley, Square D, Cutler Hammer, General Electric, or ENGINEER-approved equal.

2.04 MANUAL STARTERS

A. Manual starters shall be rated for the motor load, and shall be equipped with built-in overloads.

B. Manual starters shall be provided with enclosures as indicated on the Plans, lockable handles that clearly indicate ON, OFF, and TRIPPED positions, pilot light, and positive, quick-make, quick break mechanisms.

C. Manual Starters shall be manufactured by Allen-Bradley, Cutler Hammer, General Electric, or ENGINEER-approved equal.

2.05 MOTOR PHASE FAILURE RELAY

A. The relay shall detect voltage values below an adjustable value, loss of phase, and phase reversal. The unit shall automatically de-energize the control circuits of the motors to be protected, when one or all three phase voltages drop below the set point. The unit shall have a nominal trip delay time of two seconds and a reset time of two seconds. The relay shall automatically reset upon restoration of the line voltage. Relays shall be MotorSaver,

Time Mark Corporation, or ENGINEER-approved equal.

2.06 MOTOR PROTECTION RELAY

A. The motor protection relay shall be capable of the following as a minimum:
   1. Phase loss
   2. Low voltage (adjustable)
   3. Phase reversal
   4. Phase unbalance

B. The motor protection relay shall be equipped with the following as a minimum:
   1. Adjustable trip delay (2 to 20 seconds)
   2. Automatic reset
   3. Transient protection (2500 volts for 10 ms)

C. Motor protection relays shall be set during the project startup according to the individual motor characteristics and application parameters. The motor protection relays for the motors with variable frequency drives shall be set as to prevent low voltage tripping.

D. The motor protection relays shall be MotorSaver Model 350, Time Mark Model 264, or ENGINEER-approved equal.

2.07 SOLID STATE REDUCED VOLTAGE STARTER

A. Furnish and install a solid-state reduced voltage starter (SSS) to provide motor soft start and soft stop, where indicated on the Plans. The starter shall be capable of operating with any standard NEMA design motor of the specified horsepower. The unit shall be self-contained, house the logic board, power switches, heat sinks, motor overload protection, control power transformer, and applicable disconnect means in one enclosure.

B. Voltage rating to be 460V, 60Hz, 3 phase, +1- 20%.

C. SSS shall be supplied with a fused disconnect switch with the ability to be lockable in the open position.

D. Operating temperature shall be 0°C to 50°C, 5% to 95% relative humidity, non-condensing. De-rate 33% for each 10°C over 50°C to a maximum of 70°C.

E. Built in overload protection shall shut down and disable the starter until reset.

F. There shall be three pairs of inverse parallel SCRs. Each SCR shall be rated to block 2.5 times the nominal line to line voltage. The SCRs shall be sized to handle locked rotor current: 6 times full load current for 10 seconds on a cold start at 50°C.

G. The starter shall be installed as indicted on the Plans, and shall be supplied with properly sized input and bypass contactors, and controls as shown on the Plans.

H. Adjustments and indicators shall be accessible from a digital keypad with LCD panel. Indications shall include control power on, motor on, motor starting, overload, motor on bypass, and current.

I. Power poles and logic assemblies to be removable as one piece assemblies. One logic assembly shall work in any size unit of a given line voltage. The logic assembly shall be conformal coated. The gate drive circuit shall be optically coupled for noise immunity and long life. The logic assembly and SCRs shall be noise immune per NEMA showering arc test for solid-state contactors.

J. The soft start unit shall be capable of voltage or current control. The voltage limit shall be adjustable from 30% to 80% of line voltage and the current control shall be adjustable from 200% to 600% of FLA. In the voltage control mode, the ramp time shall be adjustable from 1 to 30 seconds, and the unit shall also have a soft stop feature.

K. The soft start shall have dry contact, form C, outputs available for internal faults, bypass contactor control, and run status.

L. Solid State reduced voltage starters shall be UL listed under UL508, and manufactured by Allen Bradley, Square D, Eaton, or ENGINEER-approved equal.

PART 3 - EXECUTION

3.01 INSTALLATION

A. Install motor controllers in accordance with equipment manufacturer's written instructions, and with recognized industry practices. Comply with applicable requirements of NEC, UL, and NEMA standards, to ensure that products fulfill requirements.

B. Tighten connectors and terminals, including screws and bolts, in accordance with equipment manufacturer's published torque values for equipment connectors. Where manufacturer's torque requirements are not indicated, tighten connectors and terminals to comply with tightening torques specified in UL Standards 486A and B, and the National Electrical Code.

C. Install fuses, of sizes indicated, in each fusible disconnect switch, if any. The type and sizes of the fuses for SSS must be per the manufacturer’s recommendation.

D. Prior to energizing motor controller equipment, check with ground resistance tester, phase-to phase and phase-to-ground insulation resistance levels to ensure requirements are fulfilled.

E. Prior to energizing, check circuitry for electrical continuity.

F. Check rotation of each motor for proper direction.

G. Upon completion of installation of motor controller equipment and electrical circuitry, energize controller circuitry and demonstrate functioning of equipment in accordance with requirements. Where possible, correct malfunctioning units at site, then retest to demonstrate compliance; otherwise, remove and replace with new units, and retest to demonstrate compliance.

END OF SECTION

SECTION 26 3213 – GENERATOR SET - DIESEL

PART 1 – GENERAL

1.01 SCOPE

A. Provide complete factory assembled generator set equipment with digital (microprocessor-based) electronic generator set controls, digital governor, and digital voltage regulator, as well as additional equipment as included in the project drawings.

B. Provide factory test, startup by a supplier authorized by the equipment manufacturer(s), and on-site testing of the system.

C. The generator set manufacturer shall warrant all equipment provided under this section, whether or not it is manufactured by the generator set manufacturer, so that there is one source for warranty and product service. Technicians specifically trained and certified by the manufacturer to support the product and employed by the generator set supplier shall service the generator sets.

D. The generator set supplier shall be responsible for complete compliance to all specification requirements for the entire on-site power supply system, including generator set.

E. Prototype testing, factory testing, site testing.

1.02 CODES AND STANDARDS

A. The generator set installation and on-site testing shall conform to the requirements of the following codes and standards, as applicable. The generator set shall include necessary features to meet the requirements of these standards.

1. ANSI S1.13 – Measurement of Sound Pressure Levels in Air
2. CSA 282, Emergency Electrical Power Supply for Buildings
3. IEEE446 – Recommended Practice for Emergency and Standby Power Systems for Commercial and Industrial Applications
4. NFPA 30 – Flammable and Combustible Liquids
5. NFPA 37 – Standard for the Installation and Use of Stationary Combustion Engines and Gas Turbines
6. NFPA 70 – National Electrical Code. Equipment shall be suitable for use in systems in compliance to Article 700, 701, and 702.
7. NFPA 99 – Essential Electrical Systems for Health Care Facilities
8. NFPA 110 – Emergency and Standby Power Systems. The generator set shall meet all requirements for Level 1 systems. Level 1 prototype tests required by this standard shall have been performed on a complete and functional unit, component level type tests will not substitute for this requirement.
9. IBC Certified for the jobsite installation requirements, and IBC 2000, 2003, 2006, 2009, and 2012.

B. The generator set and supplied accessories shall meet the requirements of the following standards:

1. NEMA MG1-1998 part 32. Alternator shall comply with the requirements of this standard.
2. UL1236 – Battery Chargers
3. UL2200. The generator set shall be listed to UL2200 or submit to an independent third-party certification process to verify compliance as installed.

C. The control system for the generator set shall comply with the following requirements.
   1. EN50082-2, Electromagnetic Compatibility – Generic Immunity Requirements, Part 2: Industrial.
   2. EN55011, Limits and Methods of Measurement of Radio Interference Characteristics of Industrial, Scientific and Medical Equipment.
   3. FCC Part 15, Subpart B.
   4. IEC8528 part 4. Control Systems for Generator Sets

D. The generator set manufacturer shall be certified to ISO 9001 International Quality Standard and shall have third party certification verifying quality assurance in design/development, production, installation, and service, in accordance with ISO 9001.

1.03 ACCEPTABLE MANUFACTURERS

A. Equipment specifications for this project are based on microprocessor-based generator sets manufactured by Caterpillar, Cummins or ENGINEER-approved equal. Equipment by other suppliers that meets the requirement of this specification are acceptable, if approved. Proposals must include a line by line compliance statement based on this specification. Modifications to the design resulting from equal equipment not specified shall be the responsibility of the Contractor.

1.04 SUBMITTALS

A. Shop drawings shall be submitted as specified in these Specifications and include the following:
   1. Installation Instructions
   2. Outline drawings of assembly
   3. One-line diagrams and wiring diagrams for assembly and components
   4. Interconnection wiring diagrams
   5. Submit names, experience level, training certifications, and locations for technicians that will be responsible for servicing equipment at this site.

B. Product data:
   1. Technical data on all major components. Technical data must include an alternator thermal damage curve, description and operating characteristics of the alternator protection device demonstrating alternator protection, and an alternator reactive capability curve.
   2. Certification of the emissions performance of the generator set engine by the engine manufacturer
   3. Seismic certification, demonstrating compliance to local requirement
   4. Sound test data, based on a free field requirement.
   5. Submit statement of compliance which states the proposed product is certified to the emission standards required by the location for EPA, stationary emergency application.

C. Project information:
   1. Test reports and certifications
   2. Factory test procedures

D. Contract closeout information:
   1. Operating and maintenance data

1.05 QUALIFICATIONS

A. The generation set manufacturer shall be certified to ISO 9001 International Quality Standard and shall have third party certification verifying quality assurance in design/development, production, installation, and service, in accordance with ISO 9001.

B. The manufacturer of this equipment shall have produced similar equipment for a minimum period of ten years. When requested by the Engineer, an acceptable list of installations with similar equipment shall be provided demonstrating compliance with this requirement.

1.06 REGULATORY REQUIREMENTS

A. The generator set shall be UL2200 listed and labeled.

B. The generator set overcurrent protection shall be UL listed as a utility grade protective device under UL category NRGU or CSA equivalent.

C. The generator set engine shall be EPA certified, in compliance with the codes and regulations of the local Air Quality Management District (AQMD), and shall comply will all applicable emissions standards at the date of installation, or per the requirements of the Air District Permit, whichever governs.

1.07 WARRANTY

A. The manufacturer shall warrant the material and workmanship of the generator set for a minimum of two (2) years from registered commissioning and start-up.

B. The warranty shall be comprehensive. No deductibles shall be allowed for travel time, service hours, repair parts cost, etc. shall be allowed during the minimum noted warranty period described in paragraph A above.

PART 2 – PRODUCTS

2.01 GENERATOR SET

A. Ratings

1. The generator set shall operate at a voltage of 480/277V, 3-Phase, 4-wire, 60 Hz.
2. The complete generator set shall be rated per ISO8528 at 125 KW at 0.8 PF standby rating, based on site conditions of: Altitude of 700 feet, max ambient temperature of 120°F, and relative humidity of 0-30 percent.
3. The generator set rating shall be based on emergency/standby service and marked as such per NFPA110.

B. Performance

1. Voltage regulation shall not exceed one percent for any constant load between no load and rated load for both parallel and non-parallel applications. Random voltage variation with any steady load from no load to full load shall not exceed plus or minus 0.5 percent.
2. Frequency regulation shall be isochronous from steady state no load to steady state rated load. Random frequency variation with any steady load from no load to full load shall not exceed plus or minus 0.25%.
3. Generator sets shall be designed to allow operation at full rated load in an ambient temperature under site conditions, based on highest ambient condition. Ambient temperature shall be as measured at the air inlet to the generator set for enclosed generator sets, and at the control of the generator set for machines installed in equipment rooms.
4. The engine-generator set shall be capable of single step load pick up of 100% nameplate kW and power factor, less applicable derating factors, with the engine-generator set at operating temperature.
5. The generator shall be capable of sustaining line to neutral short circuit 300% of the rated current for 10 seconds without externally mounted devices.

6. The alternator shall produce a clean AC voltage waveform, with not more than 5% total harmonic distortion at full linear load, when measured from line to neutral, and with not more than 3% in any single harmonic, and no 3rd order harmonics or their multiples. Telephone influence factor shall be less than 40.
7. The generator set shall be certified by the engine manufacturer to be suitable for use at the installed location and rating, and shall meet all applicable exhaust emission requirements.
8. The generator set shall be tested by the manufacturer per ANSI S1.13. Data documenting performance shall be provided with submittal documentation.

C. Construction
1. The engine-generator set shall be mounted on a heavy-duty steel base to maintain alignment between components.
2. All switches, lamps, and meters in the control system shall be oil-tight and dust-tight. There shall be no exposed points in the control (with the door open) that operate in excess of 50 volts.
3. Rigging Information: Indicate location of each lifting attachment, generator-set center of gravity, and total package weight in submittal drawings

D. Connections
1. The generator set load connections shall be composed of silver or tin plated copper bus bars, drilled to accept mechanical or compression terminations of the number and type as shown on the drawings. Sufficient lug space shall be provided for use with cables of the number and size as shown on the drawings.
2. Power connections to auxiliary devices shall be made at the devices, with required protection located at a wall-mounted common distribution panel.
3. Generator set control interfaces to other system components shall be made on a common, permanently labeled terminal block assembly.

2.02 ENGINE AND ENGINE EQUIPMENT

A. The engine shall be diesel, radiator and fan cooled. Minimum displacement and number of cylinders shall be the same or greater than the equivalent rated unit by the manufacturer specified in Section 1.03. The horsepower rating of the engine at its minimum tolerance level shall be sufficient to drive the alternator and all connected accessories. Two cycle engines are not acceptable. Engine accessories and features shall include:
1. An electronic governor system shall provide automatic isochronous frequency regulation. The governing system dynamic capabilities shall be controlled as a function of engine coolant temperature to provide fast, stable operation at varying engine operating temperature conditions. The control system shall actively control the fuel rate and excitation as appropriate to the state of the generator set. Fuel rate shall be regulated as a function of starting, accelerating to start disconnect speed, accelerating to rated speed, and operating in various isochronous states.
2. Skid-mounted radiator and cooling system rated for full load operation in 40°C ambient as measured at the generator air inlet, based on 0.5 in H2O external static head. Radiator shall be sized based on a core temperature which is 10°C higher than the rated operation temperature, or prototype tested to verify cooling performance of the engine/radiator/fan operation in a controlled environment. Radiator shall be provided with a duct adapter flange. The cooling system shall be filled with a 50/50-ethylene glycol/water mixture by the equipment manufacturer. Rotating parts shall be guarded against accidental contact.
3. Electric starter capable of three complete cranking cycles without overheating.
4. Positive displacement, mechanical, full pressure, lubrication oil pump.

5. Full flow lubrication oil filters with replaceable spin-on canister elements and dipstick oil level indicator.
6. Diesel engines shall include an engine driven, mechanical, positive displacement fuel pump and fuel filter(s) with replaceable spin-on canister element(s). Fuel cooler, suitable for operation of the generator set at full rated load in the ambient temperature specified shall be provided if required for operation due to the design of the engine and the installation.
7. Replaceable dry element air cleaner with restriction indicator.
8. Flexible supply and return fuel lines.
9. Engine mounted battery charging alternator, 35-ampere minimum, and solid-state voltage regulator.

B. Coolant heater
1. Engine mounted, thermostatically controlled, coolant heater(s) for each engine. Heater voltage shall be as shown on the project drawings. The coolant heater shall be UL499 listed and labeled.
2. The coolant heater shall be installed on the engine with SAEJ20 compliant materials. Steel tubing shall be used for connections into the engine coolant system wherever the length of pipe run exceeds 12 inches. The coolant heater installation shall be specifically designed to provide proper venting of the system. The coolant heaters shall be installed using isolation valves to isolate the heater for replacement of the heater element.
3. The coolant heater shall be provided with a 24VDC thermostat, installed at the engine thermostat housing. An AC power connection shall be provided for a single AC power connection to the coolant heater system.
4. The coolant heater(s) shall be sized as recommended by the engine manufacturer to warm the engine to a minimum of 40°C in a 15°C ambient, as a minimum, or the temperature required for starting and load pickup requirements of this specification.

C. Provide vibration isolators, spring type, EQ Certified, rating and quantity as recommended by the generator set manufacturer to be compatible with genset manufacturers CBC Seismic Certification. Isolators shall include seismic restraints as required by site location.

D. Starting and Control Batteries shall be lead acid type, 24 volt DC, sized as recommended by the engine manufacturer for compliance to NFPA110 starting requirements, complete with battery cables, connectors, and rack.

E. Provide flex connection for engine of size and type as recommended by the generator set manufacturer and connect to existing exhaust silencer. Utilize existing exhaust system installed in the facility by others according to the engine manufacturer's recommendations and applicable codes and standards.

F. Provide fully regulated, constant voltage, current limited, battery charger for each battery bank charger. The chargers shall be designed for heavy-duty industrial service, primarily to quickly recharge and maintain batteries that start internal combustion engines. Charger shall be rated a minimum of 10 amps, and be capable of operating in parallel with another like charger for reliability and added charging capacity.
1. Charger shall provide 4 distinct charge states: "dead battery", "bulk charge", "absorption", and "float". Charge rate shall be temperature compensated to provide proper charging in ambient conditions from –20°C to +55°C.
2. Provider LED indication of general charger condition, including charging, fault, and equalize. Provide a 2-line LCD display to indicate charge rate, battery voltage, faults, and provide for charger set up. Charger shall provide relay contacts for fault conditions as required by NFPA110.

3. The charger shall operate properly during fault conditions, including battery disconnection while charging, reversed battery polarity connections, and shorted battery.
4. The charger shall be compliant to the same RFI/EMI and voltage surge performance as are specified for the genset control.

2.03 LOW VOLTAGE AC ALTERNATOR

A. The AC alternator shall be; synchronous, four pole, 2/3 pitch, brushless, revolving field, drip-proof construction, single pre-lubricated sealed bearing, air cooled by a direct drive centrifugal blower fan, and directly connected to the engine with flexible drive disc. The alternator design shall prevent shaft current from flowing and eliminate the need for insulated bearings. All insulation system components shall meet NEMA MG1 requirements for Class H insulation systems. Actual temperature rise measured by resistance method at full load shall not exceed 125ºC in a 40°C ambient. Alternator shall be provided with protection to prevent damage due to any external fault or overload condition, including short circuit, ground fault, or overload.

B. The alternator shall be capable of delivering rated output (kVA) at rated frequency and power factor, at any voltage up to 5 percent above or below rated voltage.

C. The alternator shall be supplied with a dedicated, independent power source for the voltage regulation system, which provides sufficient excitation for the alternator to supply 300% of rated output current for 10 seconds.

D. The subtransient reactance of the alternator shall not exceed 12 percent based on the standby rating of the generator set.

E. Provide an anti-condensation heater for the alternator for generator sets installed outdoors or in unheated environments or in coastal environments.

2.04 GENERATOR SET CONTROL AND PROTECTION

A. Generator
1. The generator set shall be provided with a microprocessor-based control system that is designed to provide automatic starting, monitoring, protection, and control functions for the generator set. The control system shall also be designed to allow local monitoring and control of the generator set, and remote monitoring and control as described in this specification.
2. The generator set shall be supplied with a disconnecting means sized per the Plans and supplied by the generator manufacturer. Disconnecting means shall be lockable in the open position in accordance with NEC 445.18(A).
3. The control shall be mounted on the generator set. The control shall be vibration isolated and prototype tested to verify the durability of all components in the system under the vibration conditions encountered.
4. The generator set mounted control shall include the following features and functions:

B. Circuit Breaker
1. The generator shall be equipped with a circuit breaker from the manufacturer. The circuit breaker's type, size, and rating shall be per the manufacturer’s recommendations. The generator shall be protected per the NFPA 70 requirements.

C. Control Switches
1. Mode Select Switch. The mode select switch shall initiate the following control modes. When in the RUN or Manual position the generator set shall start, and accelerate to rated speed and voltage as directed by the operator. In the OFF position the generator set shall immediately stop, bypassing all time delays. In the AUTO position the generator set shall be ready to accept a signal from a remote device to start and accelerate to rated speed and voltage.

2. EMERGENCY STOP switch. Switch shall be Red "mushroom-head" push-button. Depressing the emergency stop switch shall cause the generator set to immediately shut down, and be locked out from automatic restarting. The switch shall include a lockout provision for use in safely disabling the generator set for necessary service.
3. RESET switch. The RESET switch shall be used to clear a fault and allow restarting the generator set after it has shut down for any fault condition.
4. PANEL LAMP switch. Operating the panel lamp switch shall cause the entire panel to be lighted with DC control power. The panel lamps shall automatically be switched off 10 minutes after the switch is operated, or after the switch is operated a second time.

D. Generator Set AC Output Metering. The generator set shall be provided with a metering set including the following features and functions:
1. Analog voltmeter, ammeter, frequency meter, and kilowatt (KW) meter. Voltmeter and ammeter shall display all three phases. Ammeter and KW meter scales shall be color coded in the following fashion: readings from 0-90% of generator set standby rating: green; readings from 90%-100% of standby rating: amber; readings in excess of 100%: red.
2. Digital metering set, 0.5% accuracy, to indicate generator RMS voltage and current, frequency, output current, output KW, KW-hours, and power factor. Generator output voltage shall be available in line-to-line and line-to-neutral voltages, and shall display all three phase voltages (line to neutral or line to line) simultaneously.
3. Both analog and digital metering are required. The analog and digital metering equipment shall be driven by a single microprocessor, to provide consistent readings and performance.

E. Generator Set Alarm and Status Display.
1. The generator set shall be provided with alarm and status indicating lamps to indicate non-automatic generator status, and existing warning and shutdown conditions. The lamps shall be high-intensity LED type. The lamp condition shall be clearly apparent under bright room lighting conditions. The generator set control shall indicate the existence of all alarm, shutdown, and status conditions associated with the generator set, including all paralleling control functions and the engine ECM on an alphanumerical display on the genset. The following alarm, shutdown, and status conditions are required, as a minimum:

Low Oil Pressure	Alarm
Low Oil Pressure	Shutdown
Oil Pressure Sender Failure	Alarm
Low Coolant Temperature	Alarm
High Coolant Temperature	Alarm
High Coolant Temperature	Shutdown
Engine Temperature Sender Failure	Alarm
Low Coolant Level	Alarm or shutdown-selectable
Fail to Crank	Shutdown
Fail to Start/Over-crank	Shutdown
Overspeed	Shutdown
Low DC Voltage	Alarm
High DC Voltage	Alarm
Weak Battery	Alarm
Low Fuel-Day tank	Alarm

High AC Voltage	Shutdown
Low AC Voltage	Shutdown
Under Frequency	Shutdown
Over Current	Shutdown
Over Current	Shutdown
Short Circuit	Shutdown
Over Load	Alarm
Emergency Stop	Shutdown

2. The generator set control shall annunciate all alarm and shutdown conditions from the engine electronic control.
3. Provisions shall be made for indication of four customer-specified alarm or shutdown conditions. Labeling of the customer-specified alarm or shutdown conditions shall be of the same type and quality as the above specified conditions. The non-automatic indicating lamp shall be red, and shall flash to indicate that the generator set is not able to automatically respond to a command to start from a remote location.

F. Engine Status Monitoring.
1. The following information shall be available from a digital status panel on the generator set control:

Engine Oil Pressure (psi or KPA)

Engine Coolant Temperature (Degrees F or C)

Engine Oil Temperature (Degrees F or C)

Engine Speed (RPM)

Number of Hours of Operation (Hours)

Number of Start Attempts

Battery Voltage (DC Volts)

2. The control system shall also incorporate a data logging and display provision to allow logging of a minimum of the last 20 warning or shutdown indications on the generator set, the time of the last fault of each type, and the number of faults of each type, and total time of operation at various loads as a percent of the standby rating of the generator set.

G. Engine Control Functions.
1. The control system provided shall include a cycle cranking system, which allows for user selected crank time, rest time, and # of cycles. Initial settings shall be for 3 cranking periods of 15 seconds each, with 15-second rest period between cranking periods.
2. The control system shall include an engine governor control, which functions to provide steady state frequency regulation as noted elsewhere in this specification. The governor control shall include adjustments for gain, damping, and a ramping function to control engine speed and limit exhaust smoke while the unit is starting. The governor control shall be suitable for use in paralleling applications without component changes.
3. The control system shall include time delay start (adjustable 0-300 seconds) and time delay stop (adjustable 0-600 seconds) functions.
4. The control system shall include sender failure monitoring logic for oil pressure and engine temperature, which is capable of discriminating between failed sender or wiring components, and an actual failure condition.

5. The control system shall include all interfaces necessary for proper operation with the paralleling equipment provided under this contract.

H. Alternator Control Functions:

1. The generator set shall include a full wave rectified automatic digital voltage regulation system that is matched and prototype tested by the engine manufacturer with the governing system provided. It shall be immune from mis-operation due to load-induced voltage waveform distortion and provide a pulse width modulated output to the alternator exciter. The voltage regulation system shall be equipped with three-phase line to neutral RMS sensing and shall control buildup of AC generator voltage to provide a linear rise and limit overshoot. The system shall include a torque-matching characteristic, which shall reduce output voltage in proportion to frequency below an adjustable frequency threshold. Torque matching characteristic shall be adjustable for roll-off frequency and rate, and be capable of being curve-matched to the engine torque curve with adjustments in the field. The voltage regulator shall include adjustments for gain, damping, and frequency roll-off. Adjustments shall be broad range, and made via digital raise-lower switches, with an alphanumeric LED readout to indicate setting level. Rotary potentiometers for system adjustments are not acceptable.
2. Controls shall be provided to monitor the output current of the generator set and initiate an alarm (over current warning) when load current exceeds 110% of the rated current of the generator set on any phase for more than 60 seconds.
3. Controls shall be provided to individually monitor all three phases of the output current for 1-, 2-, or 3-phase short circuit conditions. The control/protection system shall monitor the current level and voltage. The controls shall shut down and lock out the generator set when output current level approaches the thermal damage point of the alternator (short circuit shutdown). This function shall be provided by equipment which is listed under UL category NRGU, or equivalent equipment that is CSA listed for applications installed in Canada.
4. Controls shall be provided to monitor the KW load on the generator set, and initiate an alarm condition (over load) when total load on the generator set exceeds the generator set rating for in excess of 5 seconds. Controls shall include a load shed control, to operate a set of dry contacts (for use in shedding customer load devices) when the generator set is overloaded.
5. An AC over/under voltage monitoring system that responds only to true RMS voltage conditions shall be provided. The system shall initiate shutdown of the generator set when alternator output voltage exceeds 110% of the operator-set voltage level for more than 10 seconds, or with no intentional delay when voltage exceeds 130%. Under voltage shutdown shall occur when the output voltage of the alternator is less than 85% for more than 10 seconds.
6. A battery monitoring system shall be provided which initiates alarms when the DC control and starting voltage is less than 16 VDC or more than 32 VDC (24 VDC nominal) or less than 8 VDC or more than 16 VDC (12VDC nominal). During engine cranking (starter engaged), the low voltage limit shall be disabled, and if DC voltage drops to less than 14.4 volts for more than two seconds a "weak battery" alarm shall be initiated.

I. The generator set shall be provided with a network communication module to allow real time communication with the generator set control by remote devices. The control shall communicate all engine and alternator data; alarm, shutdown, and status conditions; and allow starting and stopping of the generator set via the network in both test and emergency modes.

J. Control Interfaces for Remote Monitoring:

1. No field connections for control devices shall be made in the AC power output enclosure. Provide the following features in the control system:
2. Form "C" dry contact set rated 2A @ 30 VDC to indicate existence of any alarm or shutdown condition on the generator set.
3. One set of contacts rated 2A @ 30 VDC to indicate generator set is ready to load. The contacts shall operate when voltage and frequency are greater than 90% of rated condition.
4. A fused 10 amp switched 24 VDC power supply circuit shall be provided for customer use. DC power shall be available from this circuit whenever the generator set is running.
5. A fused 20 amp 24 VDC power supply circuit shall be provided for customer use. DC power shall be available from this circuit at all times from the engine starting/control batteries.
6. The control shall be provided with a direct serial communication link for the communication network interface as described elsewhere in this specification and shown on the drawings.

2.05 SOUND/WEATHER ENCLOSURE

A. The complete diesel engine generator set, including generator control panel, engine starting batteries and fuel oil tank, shall be enclosed in a factory assembled, sound attenuated enclosure mounted on the integral sub-base fuel tank. The sound attenuated enclosure shall be weather resistant to withstand outdoor exposure.

B. A sound attenuated enclosure of steel with electrostatically applied powder coated baked polyester paint. It shall consist of a roof, side walls, and end walls. Fasteners shall be either zinc plated or stainless steel. Handles shall be key lockable, all doors keyed alike, and hinges shall be zinc die cast or stainless steel. Access doors shall be hinged and can be lifted off after opening 90 degrees. Intake openings shall be screened to prevent the entrance of rodents or pests.

C. The sound enclosure shall meet Level III requirements listed below, unless noted otherwise on the plans (as measured at a distance of 7 meters).
Level I – Generator operates at 70 to 89 d(B)A
Level II – Generator operates at 63 to 78 d(B)A
Level III – Generator operates at 68 to 72 d(B)A

2.06 SUBBASE FUEL TANK

A. The package shall include a sub base fuel tank with a minimum of 12 hours of fuel storage while operating at full load. The fuel tank shall be constructed of heavy gauge welded steel and shall be double walled with a sealed, separately vented, integral fuel containment basin.

B. The fuel tank shall include a low fuel level switch and a leak detection rupture basin switch. The fuel tank shall be UL 142 listed, ULC-S601-07 listed and NFPA 37 compliant

C. The package shall include the manufacturer’s standard accessory kit.

PART 3 - EXECUTION

3.01 PROTOTYPE TESTING

A. Submit evidence of prototype testing; manufacturer’s certificate, etc.

3.02 SUBMITTALS

A. For equals, within 10 days after award of contract, provide six sets of the following information for review:

1. Manufacturer’s product literature and performance data, sufficient to verify compliance to specification requirements.
2. A paragraph by paragraph specification compliance statement, describing the differences between the specified and the proposed equipment.
3. Manufacturer's certification of prototype testing.
4. Manufacturer's published warranty documents.
5. Shop drawings showing plan and elevation views with certified overall dimensions, as well as wiring interconnection details.
6. Interconnection wiring diagrams showing all external connections required; with field wiring terminals marked in a consistent point to point manner.
7. Manufacturer’s installation instructions.

3.03 FACTORY TESTING

A. The generator set manufacturer shall perform a complete operational test on the generator set prior to shipping from the factory. A certified test report shall be provided. All testing shall be performed with calibrated metering.

B. Generator set factory tests on the equipment shall be performed at rated load and rated power factor, as well as 1.0 power factor. Generator sets that have not been factory tested at rated power factor will not be acceptable. Tests shall include: run at full load, maximum power, voltage regulation, transient and steady-state governing, single step load pickup, and function of safety shutdowns.

C. A certified test report shall be provided documenting the results of these tests.

3.04 INSTALLATION

A. Equipment shall be installed by the contractor in accordance with final submittals and contract documents. Installation shall comply with applicable state and local codes as required by the authority having jurisdiction. Install equipment in accordance with manufacturer's instructions and instructions included in the listing or labeling of UL listed products.

B. Installation of equipment shall include furnishing and installing all interconnecting wiring between all major equipment provided for the on-site power system. The contractor shall also perform interconnecting wiring between equipment sections (when required), under the supervision of the equipment supplier.

C. Equipment shall be installed on concrete housekeeping pads or as indicated in the plans. Equipment shall be permanently fastened to the pad in accordance with manufacturer’s instructions and seismic requirements of the site.

D. Equipment shall be initially started and operated by representatives of the manufacturer. All protective settings shall be adjusted as instructed by the consulting engineer.

E. All equipment shall be physically inspected for damage. Scratches and other installation damage shall be repaired prior to final system testing. Equipment shall be thoroughly cleaned to remove all dirt and construction debris prior to initial operation and final testing of the system.

F. On completion of the installation by the electrical contractor, the generator set supplier shall conduct a site evaluation to verify that the equipment is installed per manufacturer’s recommended practice.

3.1 ON-SITE ACCEPTANCE TEST

A. The complete installation shall be tested to verify compliance with the performance requirements of this specification following completion of all site work. Testing shall be conducted by representatives of the manufacturer, with required fuel supplied by

Contractor. The Engineer shall be notified in advance and shall have the option to witness the tests. The generator set manufacturer shall provide a site test specification covering the entire system. Tests shall include:

B. Prior to start of active testing, all field connections for wiring, power conductors, and bus bar connections shall be checked for proper tightening torque.

C. Installation acceptance tests to be conducted on-site shall include a "cold start" test, a two hour full load (resistive) test, and a one-step rated load pickup test in accordance with NFPA 110. Provide a resistive load bank and make temporary connections for full load test, if necessary.

D. Perform a power failure test on the entire installed system. This test shall be conducted by opening the power supply from the utility service, and observing proper operation of the system for at least 2 hours. Coordinate timing and obtain approval for start of test with site personnel.

3.05 TRAINING

A. The equipment supplier shall provide training for the facility operating personnel covering operation and maintenance of the equipment provided. The training program shall be not less than 4 hours in duration and the class size shall be limited to 5 persons. Training date shall be coordinated with the facility owner.

3.06 SERVICE AND SUPPORT

A. The generator set supplier shall maintain service parts inventory for the entire power system at a central location which is accessible to the service location 24 hours per day, 365 days per year. The inventory shall have a commercial value of $3 million or more. The manufacturer of the generator set shall maintain a central parts inventory to support the supplier, covering all the major components of the power system, including engines, alternators, control systems, paralleling electronics, and power transfer equipment.

B. The generator set shall be serviced by a local service organization that is trained and factory certified in generator set service. The supplier shall maintain an inventory of critical power system replacement parts in the local service location. Service vehicles shall be stocked with critical replacement parts. The service organization shall be on call 24 hours per day, 365 days per year. The service organization shall be physically located within 40 miles of the site.

C. The manufacturer shall maintain model and serial number records of each generator set provided for at least 20 years.

END OF SECTION

SECTION 26 3353 – STATIC UNINTERRUPTIBLE POWER SUPPLY

PART 1 - GENERAL

1.01 SCOPE OF WORK

A. This section covers the requirements for uninterruptable power supplies (UPSs) to be provided as shown on the Plans.

1.02 SUBMITTALS

A. Products shall be submitted in accordance with these Specifications and the Contract Documents prior to installation.

1.03 REFERENCES

A. National Electrical Code (NEC) Article 250

PART 2 - PRODUCTS

2.01 GENERAL REQUIREMENTS

A. The UPS equipment shall be manufactured by Powerware, or equal.

B. The UPS shall be sized for a minimum of 30 minutes of backup power for its rated load. The rated load shall be equal to or greater than the connected load.

C. The UPS shall be a line-interactive type, consisting of a ferroresonant or linear transformer, battery charger, batteries, inverter, and microprocessor control. The batteries shall be maintenance free, premium type.

D. The UPS shall pass lightning and surge protection ANSI/IEEE C62.41 standards, Category A and B. The UPS shall be UL 1449 listed.

E. The output waveform shall be a pure sine-wave with less than 5% total harmonic distortion on the inverter.

F. The UPS shall have a digital display for load-dependent runtime, volts in, volts out, battery voltage, percent loading, and alarm codes.

G. The UPS shall operate between 0 and 50°C, at a minimum of 95% efficiency on-line.

PART 3 - EXECUTION

3.01 INSTALLATION

A. Install the UPS equipment in accordance with the manufacturers' recommendations.

B. The UPS shall be provided with a 2-year parts and factory service warranty.

END OF SECTION

SECTION 26 3600 – AUTOMATIC TRANSFER

PART 1 – GENERAL

1.01 SCOPE OF WORK

A. Automatic transfer switch shall be furnished and installed, as indicated on the Drawings, with full load current and voltage ratings as indicated on the Drawings. The switch shall be capable of switching all classes of load, and shall be rated for continuous duty when installed in a non-ventilated enclosure. Withstand current rating shall be as indicated on the Drawings.

1.02 SUBMITTALS

A. CONTRACTOR shall submit shop drawings, manufacturer's data sheets, and a complete wiring diagram detailing all connections to the electrical system in accordance with these Specifications and other requirements of the Contract Documents.

PART 2 – PRODUCTS

2.01 AUTOMATIC TRANSFER SWITCH

A. The automatic transfer switch shall be of the time delay neutral, delayed transition, break-before-make type. The automatic transfer switch shall have the following capabilities:
   1. Adjustable time delay for generator start
   2. Adjustable time delay transfer to generator
   3. Adjustable time delay in "off" position
   4. Re-transfer to normal power position inhibit
   5. Adjustable time delay for generator stop
   6. The switches shall be capable of transferring successfully in either direction with 70 percent of rated voltage applied to the terminals.

B. The normal and standby contacts shall be positively interlocked mechanically and electrically to prevent simultaneous closing. Main contacts shall be mechanically locked in position in both the normal and standby positions without the use of hooks, latches, or magnets, and shall be silver alloy protected by arcing contacts, with magnetic blowouts on each pole. Parallel main contacts are not acceptable.

C. The transfer switch shall be equipped with a manual operator that is designed to prevent injury to personnel if the electrical operator should become energized during manual transfer.

D. The transfer switch, complete with all accessories, shall be listed by UL. Transfer switches installed outdoors shall be rated NEMA 3R unless noted otherwise in Plans. Transfer switches installed indoors shall be rated NEMA 1 unless noted otherwise in Plans.

E. The transfer switch shall be compatible with the standby generator, and shall be supplied with the generator.

F. The transfer switch operation shall be selectable by the Operator. In Manual mode, the Operator shall be able to transfer the load to the generator using a selector, toggle, or pushbutton switch. In Automatic mode, the internal logic shall sense loss or presence of utility power, and transfer the load to or from the generator.

G. Transfer switches shall be manufactured by CAT, ASCO, Zenith, Russelectric, or ENGINEER-approved equal.

2.02 ACCESSORIES

A. The transfer switch shall be equipped with the following:
   1. Nominal 0.5 to 6 second time delay to override momentary outages.
   2. Field adjustable 0 to 31 minutes time delay to retransfer to normal source with 5-minute unloaded running time of standby plant. A switch shall be provided to bypass this feature with transfer to normal source made manually. Time delay shall be nullified if standby power fails and normal power is available.
   3. Differential protection on 3 phases. Dropout and pickup.
   4. Test switch.
   5. Auxiliary contacts which close in normal position. Two sets of Form C contacts shall be provided.
   6. Auxiliary contacts which close with normal power available. Two sets of Form C contacts shall be provided.
   7. Auxiliary contacts which close in standby position. Two sets of Form C contacts shall be provided.
   8. Auxiliary contacts which close with standby power available. Two sets of Form C contacts shall be provided.
   9. Pilot lights: indicating normal and standby switch position.
   10. Manual and automatic selector switch.
   11. Manual and automatic pilot lights with push-to-test.

PART 3 – EXECUTION

3.01 INSTALLATION

A. Transfer switch shall be installed, in accordance with the manufacturer's recommendations.

3.02 MANUFACTURER TESTING

A. When conducting temperature rise tests in accordance with UL, the manufacturer shall include post-endurance temperature rise tests to verify the ability of the switches to carry full rated current after completing the overload and endurance tests.

B. On completion of the installation, start-up shall be performed by a factory-trained service representative in the presence of the OWNER and the ENGINEER.

3.03 TESTING AND TRAINING

A. Testing and training for this equipment shall be provided in accordance with the Contract Documents. Installation and performance testing shall be conducted as part of the standby generator tests.

B. Four (4) hours of training shall be provided for the OWNER's Operations and Maintenance Staff. Training shall be certified on forms provided in the Contract Documents. Training shall cover theory of operation, features and functions available, normal operation, troubleshooting, and routine maintenance. The CONTRACTOR shall submit a syllabus for the training session for approval, within 3 weeks of conducting the class. Provide each attendee with a class syllabus detailing each topic to be discussed.

END OF SECTION

SECTION 26 4100 – FACILITY LIGHTNING PROTECTION

PART 1 - GENERAL

1.01 SUMMARY

A. Section Includes: Air terminals, interconnecting conductors, grounding, and bonding for lightning protection.

1.02 SYSTEM DESCRIPTION

A. Description: Conductor system protecting Treatment Building.

1.03 SUBMITTALS

A. Shop Drawings: Indicate layout of air terminals, grounding electrodes, and bonding connections to structure and other metal objects. Include terminal, electrode, and conductor sizes, and connection and termination details.

B. Product Data: Show dimensions and materials of each component, and include indication of listing according to UL 96

C. Test Reports: Indicate procedures and results for specified factory and field testing and inspection.

D. Manufacturer's Certificate: Products meet or exceed specified requirements.

E. Certificate of Compliance: From AHJ/inspector indicating approval of lightning protection systems.

1.04 CLOSEOUT SUBMITTALS

A. Project Record Documents: Record actual locations of air terminals, grounding electrodes, bonding connections, and routing of system conductors.

1.05 QUALITY ASSURANCE

A. Perform Work according to NFPA 780.

B. Perform Work according to UL 96A.

C. Perform Work according to LPI-175.

D. Manufacturer: Company specializing in lightning protection equipment with three years' experience and member of Lightning Protection Institute.

E. Installer: Authorized installer of manufacturer with three years' experience.

F. Inspection Agency: UL Lightning Protection Institute, Inc. (LPI) Electrical Testing Laboratories, Inc., or ENGINEER-approved equal.

1.06 FIELD MEASUREMENTS

A. Verify field measurements prior to fabrication, and indicate on Shop Drawings.

1.07 COORDINATION

A. Coordinate Work with roofing and exterior and interior finish installations.

PART 2 - PRODUCTS

2.01 COMPONENTS

A. Manufacturers:
   1. ABB, Eaton, Erico or ENGINEER-approved equal

B. Product Listing:
   1. UL 96.

C. Air Terminals:
   1. Material: Copper.
   2. Configuration: Solid.
   3. Use adhesive base for single-ply roof installations.
   4. Air Terminal for Chimney: Lead-coated copper.
   5. Decorations: Ball.
   6. Grounding Rods: Solid copper.
   7. Ground Plate: Copper.
   8. Conductors:
      Material: Copper.
      Configuration: Cable.

D. Connectors and Splicers: Bronze

PART 3 - EXECUTION

3.01 INSTALLATION

A. Install according to NFPA 780, UL 96A, and LPI-175.

B. Connect conductors using exothermic welding process. Protect adjacent construction elements and finishes from damage.

C. Conceal interior conductors within building finishes. Conceal exterior conductors where practical.

D. Bond exterior metal bodies on building to lightning protection system.

3.02 FIELD QUALITY CONTROL

A. Perform inspection and testing according to UL 96A.

END OF SECTION

SECTION 26 4313 – SURGE PROTECTIVE DEVICES FOR LOW-VOLTAGE ELECTRICAL POWER CIRCUITS

PART 1 - GENERAL

1.01 APPLICABLE STANDARDS AND TESTING

A. UL 1449 – Surge Protective Devices

B. UL 1283 – Electromagnetic Interference Filters

C. UL 67 – Panelboards (UL 67 listing for internal panelboard SPD)

D. NEC 2020 – (NEC Article 242 SPD Installation practice/NEC Article 250.53 Grounding)

E. NFPA 78 – Guide on Electrical Inspections

F. ISO 9001:2015 – Quality standard

G. IEEE C62.41.1 and C62.41.2 - (System shall be designed to meet American National Standards Institute/Institute of Electrical and Electronic Engineering Inc. C62.41)

H. IEEE C62.45 2002. – (System shall be tested to meet the C62.45)

I. Category A & B – (0.5 μSEC x 100 kHz Ring Wave)

J. Category B3 Biwave – (8 x 20 μSEC at 3,000 Amperes and 1.2 x 50 μSEC at 6,000 Volts)

K. Category C3 Biwave – (8 x 20 μSEC at 10,000 Amperes and 1.2 x 50 μSEC at 20,000 Volts)

L. The fusing elements must be capable of allowing the SPD's rated single impulse current to pass through the SPD at least one time without failure. The system shall be tested to 1,000 sequential ANSI/IEEE C62.41.1 and C62.41.2 Category C3 combination wave transients. The Category C3 combination wave is defined as a 1.2 x 50 microsecond wave at 20,000-volt open circuit voltage waveform and 8 x 20 microsecond wave at 10,000-ampere short circuit current waveform. In addition, the system components shall be tested repetitively 1,000 times testing based on an IEEE C62.33 (MOV test) and C62.35 (SAD test) without failure or degradation exceeding ±10%.

M. CBEMA (ITIC) and IEC - (Computer Business Equipment Manufacturers Association or Information Technology Industry Council and International Electrotechnical Commission define clamping voltage tolerance guidelines for sensitive equipment)

1.02 SUBMITTALS

A. Must have approval fifteen days prior to bidding on project. Request for submittal must be in writing with the following items.

B. Drawings: Electrical and mechanical drawings shall be provided by the manufacturer which show unit dimensions, weights, mounting provisions, connection notes, wire size and wiring diagram.

C. Equipment Manual: The manufacturer shall furnish an installation manual with installation notes, start-up, and operating instructions for the specified system. Installation instructions shall clearly state whether the system requires an external overcurrent device to maintain the system's UL 1449 listing.

D. National Electrical Code (NEC) 242 - Installation requirements for SPD.

1. Section 242.8, An SPD shall be a listed device (UL 1449).
2. Section 242.10, SPD shall be marked with a short-circuit current rating and shall not be installed at a point on the system (ex. service, distribution, or branch panels) where the available fault current (AIC rating) is in excess of that rating.

E. UL 1449 stipulation for fused SPD - The manufacturer's authorized representative is required to submit the following:
   1. Certify that the SPD system is UL 1449 listed (UL Card).
   2. Indicate the type of internal or external fusing that is incorporated in the SPD system and what impact the fusing has on the performance of the device with respect to surge capacity and clamping levels.

F. CBEMA (ITIC) & IEC - SVRS must meet voltage tolerance guidelines:
   1. SVR clamp levels for wye and single phase (L-N, L-G and N-G):
      a. 400-600V for 120V systems, 800-1200V for 277V systems and 1200-1500V for 347V systems
   2. SVR clamp levels for delta circuits (L-L and L-G):
      a. 1000-1200V for 240V systems, 1500-1800V for 480V systems and 1800-2000V for 600V systems

PART 2 - PRODUCTS

2.01 SERVICE ENTRANCE/SWITCHBOARD/SWITCHGEAR

A. Acceptable Manufacturers:
   1. Current Technology
   2. LEA International Inc.
   3. Liebert
   4. Phoenix Contact
   5. General Electric
   6. OR ENGINEER-approved equal

B. Equipment shall be a multi-stage parallel protector rated for 277/480VAC, 3 PHASE, 4 WIRE, plus ground. The equipment's minimum surge current capacity shall be 400 kA per phase (L-N plus L-G) and 200 kA per mode (L-N, L-G, L-L and N-G).

C. The system protection modules shall contain a technology that utilizes a symmetrical array of balanced metal oxide varistors (MOV). Each MOV will be individually coordinated to pass UL 1449.

D. All primary transient paths shall utilize copper wire, copper bus bar and lugs of equivalent capacity to provide equal impedance interconnection between phases. No plug-in module or components shall be used in surge carrying paths.

E. Each protection module shall have a visual indicator that signifies that the protection circuitry is on line. The unit shall not be taken off line to verify integrity of system. Redundant status indicators shall be mounted on the front of the door that monitors the system protection circuitry.

F. The system shall be modular with field replaceable modules. Modular units shall contain a minimum of one module per phase.

G. Each protection module shall have a capacitive filtering system connected in each Line to Neutral (L→N)(Wye) mode or Line to Line (L→L)(Delta) mode to provide EMI/RFI noise attenuation (UL 1283).

H. Protection modes: The SPD shall provide Line to Neutral (L→N)(Wye), Line to Ground (L→G)(Wye or Delta), Line to Line (L→L)(Delta) and Neutral to Ground (N→G)(Wye) protection.

I. Service Conditions: Rate surge protective device for continuous operation under the following conditions, unless otherwise indicated:
   1. MCOV: Maximum Continuous Operating Voltage of 125% or greater
   2. Operating Temperature: 30°F to 120°F
   3. Humidity: 0 to 85 percent, noncondensing
   4. Altitude: Less than 20,000 feet above sea level

2.02 BRANCH PANEL PROTECTION

A. Acceptable Manufacturers:
   1. Current Technology
   2. LEA International Inc.
   3. Liebert
   4. Phoenix Contact
   5. General Electric
   6. OR ENGINEER-approved equal

B. Device shall meet all specification requirements in section 2.1 except as follows:
   1. Equipment shall be a multi-stage parallel protector rated for 277/480VAC, 3 PHASE, 4 WIRE, plus ground. The equipment's minimum surge current capacity shall be 120 kA per phase (L-N plus L-G) and 200 kA per mode (L-N, L-G, L-L and N-G).

C. The system protection modules shall contain a technology that utilizes a symmetrical array of balanced metal oxide varistors (MOV). Each MOV will be individually coordinated to pass UL 1449.

PART 3 - EXECUTION

3.01 INSTALLATION

A. The specified service entrance/switchboard/switchgear system shall be installed with the shortest lead length possible not to exceed five (5) electrical feet from the power conductor(s) it is protecting, must have a grounding of 25 Ohms (per NEC Article 250.53(A)(2) Exception) or less and shall avoid any unnecessary or sharp bends. Utilize a 3-pole 15-amp breaker for connection means.

B. The specified branch panelboard system shall be installed with the shortest lead length possible not to exceed a foot and half (1.5) electrical feet from the power conductor(s) it is protecting, must have a grounding of 25 Ohms (per NEC Article 250.53(A)(2) Exception) or less and shall avoid any unnecessary or sharp bends.

3.02 WARRANTY AND QUALITY ASSURANCE

A. Manufacturer shall provide a product warranty for a period of not less than five (5) years from date of installation. Warranty shall cover unlimited replacement of SPD modules during the warranty period. Those firms responding to this specification shall provide proof that they have been regularly engaged in the design, manufacturing and testing of SPD for not less than twenty-five (25) years. Utilize a 3-pole 15-amp breaker for connection means.

3.03 ACCEPTANCE

A. Manufacturer's representative shall visit site, verify installation, and submit to Contracting Officer a letter stating that equipment and installation meets intent of Contract Documents and manufacturer's warranties and that guarantees are in effect.

END OF SECTION

SECTION 26 5000 – LIGHTING

PART 1 – GENERAL

1.01 SUMMARY

A. Section Includes: Luminaires, ballasts, poles and lamps.

1.02 SUBMITTALS

B. Submit manufacturer's data for the following:
   1. Luminaires with designation as indicated on the Drawings, for each one proposed.
   2. Luminaire ballasts, for each one proposed.
   3. Lamps (type, color, wattage, etc.), for each one proposed.
   4. Light pole with accessories, including foundation details. Area light pole foundations must be designed for 80mph wind loading with 100mph wind gusts.

C. Submit manufacturer's data demonstrating compliance with Specifications and the luminaires as indicated on the Drawings.

1.03 QUALITY ASSURANCE

D. Comply with the following Codes and Standards, as well as these Specifications and Contract Documents:
   1. UL-listed and -labeled
   2. NEMA
   3. NFPA 70 (NEC)
   4. IES

PART 2 – PRODUCTS

2.01 ACCEPTABLE MANUFACTURERS

A. See Plans.

2.02 MATERIALS

A. Luminaires shall be:
   1. Furnished with proper outlet boxes, hangers, hardware, supports, canopy extensions, etc. Wall mounted exterior luminaires shall be furnished with a flush {surface} mounted weatherproof box and be rated for outdoor use in wet locations.
   2. Furnished complete with lamps with wattage and voltage as indicated on the Drawings.
   3. Furnished complete with plaster frames and light tight gaskets when recessed in drywall or plaster ceilings or overhangs.
   4. Of the specified finishes and color.

B. Ballasts for luminaires with high pressure sodium lamps shall be:
   1. Autoregulator, constant wattage type (CWA) 90% pf, 18 percent maximum loss, low starting current).
   2. LPA "Peak Lead" auto transformer type, 90 percent pf, 20 percent loss, for two lamp fixtures, metallic vapor.
   3. UL listed and labeled for application.
   4. Sound rated 20 to 24db (free if magnetic hum).
   5. Isolated for vibration.
   6. Not exceed 90ºC operating temperature.

7. Meet NEMA standards and be labeled.

C. Lighting contactors:
   1. Lighting contactors shall be heavy-duty type with a 120 VAC operating coil.
   2. Unless otherwise indicated, the lighting contactor shall have a minimum of three 600V contacts with amperage rating no less than the maximum lighting circuit passing through the contactor.

D. Photocells:
   1. Photocells shall operate on 120VAC unless otherwise indicated and housed in a heavy-duty, weatherproof housing.
   2. Normally open contacts shall close at approximately 3 foot-candles and open at approximately 12 foot-candles.

E. Time clocks:
   1. Time clocks shall be 24-hour, electromechanical type with a synchronous motor and spring-driven reserve power. Power for the timeclock shall be 120VAC or as indicated on the Drawings. Contacts shall be rated 40A at 120VAC.

F. Area Lighting:
   1. Pole mounted area lights shall be furnished complete with pole, handhole, receptacle, gaskets, welded ground lug opposite the handhole, luminaire labeled approved for wet location. Luminaires shall have lamp bases coated with an inhibitor to prevent base from corroding to the socket and be solidly grounded.
   2. Where indicated, luminaires shall include a factory-installed photocell with the following features.
      a. Photocells shall operate on 120VAC unless otherwise indicated and housed in a heavy-duty, weatherproof housing.
      b. Normally open contacts shall close at approximately 3 foot-candles and open at approximately 12 foot-candles.

G. Light Poles:
   1. Light poles shall be constructed of square aluminum tubing with a flush-mounted receptacle and hinged pole base as indicated on the Drawings.

H. Exterior Lighting:
   1. Exterior luminaires shall be furnished complete with gaskets, cast aluminum weatherproof outlet boxes, labeled approved for outdoor locations, have lamp bases coated with an inhibitor to prevent base from corroding to the socket and be solidly grounded.

PART 3 - EXECUTION

3.01 INTERFERENCES

A. Contractor shall carefully examine the complete areas as well as each individual room where luminaires are to be installed, for interference with piping and other trades. Where such interferences occur, provide luminaires with proper type suspension to overcome such interferences.

3.02 INSTALLATION

A. Luminaires shall be installed parallel with walls and ground for a neat appearance. Where luminaires are indicated to be mounted on a perimeter wall, luminaires shall be installed on a flush mounted box at an elevation such that the top of fixture is flush with the top of wall.

B. Operate luminaires after installation and connection. Check for proper operation. Re-lamp luminaires that have failed lamps.

3.03 OPERATION

A. Area lights shall be controlled by a 3-position selector switch (On-Off-PC) located on the outdoor lighting control panel door.

B. Shade canopy lights shall be controlled by a light switch, location as indicated on the Drawings.

C. Lighting shall be controlled as indicated on the Drawings.

END OF SECTION

SECTION 28 3146 – FIRE DETECTION AND ALARM

PART 1 – GENERAL

1.01 SCOPE OF WORK

A. The CONTRACTOR shall furnish and install, smoke detectors, as indicated on the Drawings and specified herein.

1.02 SUBMITTALS

A. Products shall be submitted in accordance with Section 01 3300 – Submittal Procedures, and elsewhere in these Specifications and Contract Documents prior to installation.

1.03 QUALITY ASSURANCE

A. The smoke detector manufacturer's facilities shall be ISO 9001 certified.

B. All smoke detection equipment shall be listed by CSFM (California State Fire Marshall).

PART 2 – PRODUCTS

2.01 GENERAL

A. The smoke detectors shall be designed to facilitate faultless operation to minimize occurrences of false alarms due to faulty equipment, electrical transients, device faults etc.

B. Smoke detectors shall be manufactured by ADT, First Alert, Kidde, BRK or an approved equal.

C. Detectors shall be commercial grade, 120-volt powered with backup batteries.

D. Each detector shall be equipped with adjustable sensitivity.

E. Individual detectors shall be capable of being inter-connected to form a detection system as indicated on the Drawings. Vendor shall state the maximum number of devices which can be inter-connected. The detectors will be loop wired and loop signaled and provided with built-in short circuit isolation. The sounders will have the synchronization feature to ensure that all the sounders give alert.

F. Detectors shall be dual function capable of embracing both photoelectric and ionization chamber technologies.

G. Detectors shall be equipped with both visual (LED) and audible type alarm indicators.

H. Detectors shall have “inside duct” mounting capabilities.

I. Detectors shall be equipped with a cancel fault buzzer.

J. Detectors shall be equipped with fire, fault, warning, and power on lamps.

K. Detectors shall be tamper-proof.

PART 3 – EXECUTION

3.01 INSTALLATION

A. Detectors shall be installed as indicated on the Drawings and per manufacturer's instructions.

B. When required Contractor will train and instruct client's personnel in the correct use, operation, and supervision of the system, prior to the handing over of the project.

3.02 OPERATION

A. The sounders shall have a synchronization feature to ensure that all the sounders give alert. If a fire condition is reported from a smoke detector all detectors shall annunciate the condition alarm simultaneously.

END OF SECTION

SECTION 31 0000 – EARTHWORK

PART 1 - GENERAL

1.01 THE REQUIREMENT

A. Perform all earthwork indicated and required for construction of the WORK, complete and operable in accordance with the Contract Documents and the latest Geotechnical Evaluation and or Soils Report.

1.02 SUBMITTALS

A. Submittals shall be made in accordance with Section 01 3300 – Submittal Procedures.
   1. Excavation Plan and stock pile storage sites.
   2. Backfill Plan

PART 2 - PRODUCTS

2.01 SUITABLE FILL AND BACKFILL MATERIAL REQUIREMENTS

A. General: All excavation or backfill shall conform to the requirements of the Geotechnical Engineer. Fill, backfill, and embankment materials shall be suitable selected or processed clean, fine earth, rock, or sand, free from grass, roots, brush, or other vegetation and approved by the Geotechnical Engineer.

B. Fill and backfill materials to be placed within 6 inches of any structure or pipe shall be free of rocks or unbroken masses of earth materials having a maximum dimension larger than 3 inches.

C. Suitable Materials: Materials not defined as unsuitable in the following Sections are defined as suitable materials and may be used in fills, backfilling and embankment construction subject to the indicated limitations. In addition, when acceptable to the ENGINEER, some of the material listed as unsuitable may be used when thoroughly mixed with suitable material to form a stable composite.

D. Suitable materials may be obtained from on-site excavations, or may be processed on-site materials. If the Geotechnical Engineer determines that excavated material is not suitable then additional compensation may be allowed on site processing or for import materials.

E. The following types of suitable materials are defined, unless otherwise specified in the project Geotechnical Evaluation and or Soils Report.
   1. Type A: Native soil excavated from the site after the site is stripped in accordance with these Specifications. This soil must be approved by the Geotechnical Engineer.
   2. Type B (sand backfill): Sand with 100% passing a 3/8-inch sieve, at least 90% passing a Number 4-sieve, and a sand equivalent value not less than 30.
   3. Type C (crushed rock): Crushed rock shall be imported material that consists of durable rock and gravel that is free of deleterious material and free from slaking or decomposition under the action of alternate wetting and drying. Crushed rock shall meet the following gradation requirements.

Sieve Size	Percentage Passing
1-inch	100
3/4 inch	90 - 100
No. 4	0 - 10
No. 200	0 - 2

These materials should have a durability index of not less than 40.

4. Type D (pea gravel or chat backfill): Crushed rock or gravel with 100% passing a ½-inch sieve and not more than 10% passing a Number 4-sieve.
5. Type E (coarse drain rock): Crushed rock or gravel with a Durability Index of not less than 40 meeting the following gradation requirements:

Sieve Size	Percentage Passing
2-inch	100
1½–inch	90 - 100
1-Inch	20 - 55
¾-inch	0 - 15
No. 200	0 - 3

6. Type F (aggregate base): Crushed rock/gravel aggregate base material shall be in accordance with MAG Standard Specification Section 702. Crushed rock and gravel shall conform to the following gradation as listed in MAG Standard Specification 702, Table 702-1:

Percentage by Weight Passing Sieve			
Select Material			
Sieve Size (Square Opening)	Type A	Type B	Aggregate Base
3-inch	100	-	-
1½–inch	-	100	-
1 1/4–inch	-	-	100
30-75	30-70	38-65	
20-60	20-60	25-60	
No. 30	10-40	10-40	10-40
No. 200	0-12	0-12	3-12

7. Type G (topsoil): Shall not be used.
8. Type H (cement-treated backfill): Material which consists of Type E material, which has been cement-treated so that the cement content of the material is not less than 5% by weight when tested in accordance with ASTM D2901 - Cement Content of Freshly Mixed Soil Cement. The ultimate compressive strength at 28 days shall be not less than 400 psi when tested in accordance with ASTM D1633 - Compressive Strength of Molded Soil - Cement Cylinders.
9. Type I (trench plug): Low permeable fill material, a non-dispersible clay material having a minimum plasticity index of 10.

2.02 UNSUITABLE MATERIAL

A. Unsuitable materials include the materials listed below:
   1. Soils defined as unsuitable in the Geotechnical Evaluation and or Soils Report or by the Geotechnical Engineer.
   2. Soils which, when classified under ASTM D2487 - Soils for Engineering Purposes (Unified Soil Classification System), fall in the Classifications of PT, OH, CH, MH or OL.
   3. Soils, which cannot be compacted sufficiently to achieve the density specified for the intended use.
   4. Materials that contain hazardous or designated waste materials including petroleum hydrocarbons, pesticides, heavy metals, and any material which may be classified as hazardous or toxic according to applicable regulations.

5. Soils that contain greater concentrations of chloride or sulfate ions, or have a soil resistivity or pH less than the existing on-site soils.
6. Topsoil, except as allowed below.

2.03 USE OF FILL, BACKFILL AND EMBANKMENT MATERIAL TYPES

A. The types of materials as designated herein for all required fill, backfill and embankment construction hereunder shall be used.

B. Where these Specifications conflict with the requirements of any local agency having jurisdiction or with the requirements of a pipe material manufacturer, the ENGINEER shall be immediately notified. In case of conflict between types of pipe embedment backfills, the agency-specified backfill material if that material provides a greater degree of structural support to the pipe shall be used. In case of conflict between types of trench or final backfill types, the agency-specified backfill material, if that material provides the greater in-place density after compaction shall be used.

C. Fill and backfill types shall be used in accordance with the following provisions as approved by the Geotechnical Engineer:
   1. Embankment fills shall be constructed of Type A materials, as defined herein, or of primarily Type I mixed with lesser amounts of Type A through Type H materials.
   2. Pipe zone backfill, as defined in these Specifications.
   3. Aggregate base materials under pavements shall be Type F material constructed to the thicknesses indicated. For aggregate sub-base shall be Type H material.
   4. Backfill around structures shall be Type I material or Types F or H where indicated on the plans.
   5. Backfill materials beneath structures shall be defined by the Geotechnical Engineer or as follows:
      a. Drain rock materials under hydraulic structures or other water retaining structures with underdrain systems shall be Type C material or where shown.
      b. Under concrete hydraulic structures or other water retaining structures without underdrain systems, Types C or E shall be used. Undisturbed subgrade.
      c. Under structures where groundwater must be removed to allow placement of concrete, Type E material shall be used. Before the Type E material is placed, filter fabric shall be placed over the exposed foundation.
      d. Under all other structures, Type A or F materials shall be used.
   6. Filter fabric, if not specified on the plans, shall be Mirafi 140 N, Mirafi 700X or ENGINEER-approved equal.

2.04 MATERIALS TESTING

A. All soils testing of samples submitted will be done by a testing laboratory with the ENGINEER’s approval and at no additional expense. At its discretion, the ENGINEER may request that samples for testing of any material used in the work be supplied.

B. Particle size analysis of soils and aggregates will be performed using ASTM D422 - Particle-Size Analysis of Soils.

C. Determination of sand equivalent value will be performed using ASTM D2419 - Sand Equivalent Value of Soils and Fine Aggregate.

D. Unified Soil Classification System: References in this Section to soil classification types and standards shall have the meanings and definitions indicated in ASTM D2487. ASTM D2487 in the interpretation of soil classifications shall bind all applicable provisions.

PART 3 - EXECUTION

3.01 EXCAVATION

A. General: Except when specifically provided to the contrary, excavation shall include the removal of all materials of whatever nature encountered, including all obstructions of any nature that would interfere with the proper execution and completion of the WORK. The removal of said materials shall conform to the lines and grades indicated or ordered. Unless otherwise indicated, the entire construction site shall be stripped of all vegetation and debris, and such material shall be removed from the site prior to performing any excavation or placing any fill. All supports and shoring that may be required for the sides of the excavations shall be furnished, placed and maintained. Excavations shall be sloped or otherwise supported in a safe manner in accordance with applicable State and OSHA safety requirements and the requirements of OSHA Safety and Health Standards for Construction (29CFR1926).

B. Removal and Exclusion of Water: Remove and exclude water, including stormwater, groundwater, irrigation water and wastewater, from all excavations as defined in the contract.

3.02 STRUCTURE, ROADWAY, AND EMBANKMENT EXCAVATION

A. Excavation Beneath Structures and Embankments: Except where otherwise indicated for a particular structure, excavation shall be carried to the grade of the bottom of the footing or slab and prepared in accordance with the Geotechnical Evaluation and or Soils Report.

B. Excavation Beneath Paved Areas: Excavation under areas to be paved shall extend to the bottom of the aggregate base and prepared in accordance with the Geotechnical Evaluation and or Soils Report.

3.03 PIPELINE AND UTILITY TRENCH EXCAVATION

A. As referenced in these Specifications.

3.04 OVER-EXCAVATION NOT ORDERED OR INDICATED

A. Any over-excavation carried below the grade ordered or indicated, shall be backfilled and compacted to the required grade with the indicated material, in accordance with the Geotechnical Engineer’s requirements.

3.05 DISPOSAL OF EXCESS EXCAVATED MATERIAL

A. Obtain OWNER approvals for disposal of excess excavated material in a designated wasting area, as defined in the contract.

3.06 BACKFILL - GENERAL

A. Backfill shall not be dropped directly upon any structure or pipe. Backfill shall not be placed around or upon any structure until the concrete has attained sufficient strength to withstand the loads imposed.

B. Except for drainrock materials being placed in over-excavated areas or trenches, backfill shall be placed after all water is removed from the excavation and the trench sidewalls and bottom have been dried to moisture content suitable for compaction.

C. Immediately prior to placement of backfill materials, the bottoms and sidewalls of trenches and structure excavations shall have all loose sloughing, or caving soil and rock materials removed. Trench sidewalls shall consist of excavated surfaces that are in a relatively undisturbed condition before placement of backfill materials.

3.07 PLACING AND SPREADING OF BACKFILL MATERIALS

A. Backfill materials shall be placed and spread evenly in layers. When compaction is achieved using mechanical equipment, the layers shall be evenly spread so that when each layer compacted shall not exceed 6 inches in thickness. The compaction lift depth may be adjusted at the direction of the Geotechnical Engineer.

B. During spreading, each layer shall be thoroughly mixed as necessary to promote uniformity of material in each layer. Pipe zone backfill materials shall be manually spread around the pipe so when compacted the pipe zone backfill will provide uniform bearing and side support.

C. Backfill should be compacted within a water content range of 3 percent below to 3 percent above optimum.

3.08 COMPACTION OF FILL, BACKFILL AND EMBANKMENT MATERIALS

A. Each layer of Types A, B, F and G, backfill materials as defined herein, where the material is graded such that at least 10% passes a No. 4 sieve, shall be mechanically compacted to the indicated percentage of density. Equipment that is consistently capable of achieving the required degree of compaction shall be used and each layer shall be compacted over its entire area while the material is at the required moisture content.

B. Each layer of Type C, D and E backfill materials shall be compacted by means of at least 2 passes from a flat plate vibratory compactor. When such materials are used for pipe zone backfill, vibratory compaction shall be used at the top of the pipe zone or at vertical intervals of 24 inches, whichever is the least distance from the sub-grade.

C. Flooding, pending or jetting shall not be permitted.

D. Equipment weighing more than 10,000 pounds shall not be used closer to walls than a horizontal distance equal to the depth of the fill at that time. Hand operated power compaction equipment shall be used where use of heavier equipment is impractical or restricted due to weight limitations. Exception: With the written approval of the Structural Engineer.

E. Backfill around and over pipelines that is mechanically compacted shall be compacted using light, hand operated, vibratory compactors and rollers. After completion of at least 2 feet of compacted backfill over the top of pipeline, compaction equipment weighing no more than 8,000 pounds may be used to complete the trench backfill.

F. Compaction Requirements: The following compaction test requirements shall be in accordance with ASTM D1557 - Laboratory Compaction Characteristics of Soils Using Modified Effort (56,000 ft - lbf/ft3) (2,700 kN-m/m3) for Type A, B, C, E, F, and G materials and in accordance with ASTM D4253 - Maximum Index Density and Unit Weight of Soils Using a Vibratory Table, and D4254 - Minimum Index Density and Unit Weight of Soils and Calculation of Relative Density, for Type C, D, E and H materials. Where agency, utility company, or Geotechnical Evaluation and or Soils Report requirements govern, the highest compaction standards shall apply.

Location or Use of Fill	**Percentage of Maximum Density**
Final backfill, beneath paved areas or structures	95
Final backfill, not beneath paved areas or structures	90
Embankments and fills	90
Embankments and fills beneath paved areas or structures	90
Backfill beneath structures and hydraulic structures	95
Backfill and fill around structures on reservoir or structure roof	90
Topsoil (Type G material)	80

Aggregate base or sub-base (Type F or H material)	95

3.09 FILL AND EMBANKMENT CONSTRUCTION

A. The area where a fill or embankment is to be constructed shall be cleared, grubbed, and stripped in accordance with these Specifications. Embankment and fill material shall be placed and spread evenly in approximately horizontal layers. Each layer shall be thoroughly mixed and moisture conditioned, as necessary. Unless otherwise approved by the ENGINEER, each layer shall not exceed 6 inches of compacted thickness.

B. Base keys shall be provided at the toes of all fill slopes more than 5 feet high. The keys shall be cut into underlying undisturbed soil. Keys shall be a minimum of 12 feet wide and 4 feet deep measured at the downslope side of the key. Keys shall be sloped back toward the fill slope at a gradient of no less than 2%.

C. When an embankment or fill is to be made and compacted against hillsides or slopes steeper than 4:1, the slopes shall be horizontally benched to key the embankment or fill to the underlying ground. A minimum of 12 inches normal to the slope shall be removed and re-compacted as the embankment or fill is brought up in layers. Material thus cut shall be re-compacted along with the new material. Hillside or fill slopes 4:1 or flatter shall be prepared in accordance with Paragraph A, above.

D. Where embankment or structure fills are constructed over pipelines, the first 4 feet of fill over the pipe shall be constructed using light placement and compaction equipment that does not damage the pipe. Heavy construction equipment shall maintain a minimum distance from the edge of the trench equal to the depth of the trench until at least 4 feet of fill over the pipe has been completed.

E. All permanent fill slopes shall be overbuilt by at least 1 foot and then cut to final grade to provide adequate compaction.

3.10 GRADING

A. General: Uniformly grade areas to a smooth surface, free of irregular surface changes. Comply with compaction requirements and grade to cross-sections, lines, and elevations indicated.
   1. Provide a smooth transition between adjacent existing grades and new grades.
   2. Cut out soft spots, fill low spots, and trim high spots to comply with required surface tolerances.

B. Site Grading: Slope grades to direct water away from buildings/structures and to prevent ponding. Finish subgrades to required elevations within the following tolerances:
   1. Lawn or Unpaved Areas: Plus or minus 1 inch
   2. Walks: Plus or minus 1 inch
   3. Pavements: Plus or minus ½-inch

3.11 FIELD TESTING

A. General: All field soils testing shall be done by a testing laboratory as specified in the Contract Documents.

B. Where soil material is required to be compacted to a percentage of maximum density, the maximum density at optimum moisture content will be determined in accordance with Method C of ASTM D1557. Where cohesionless, free draining soil material is required to be compacted to a percentage of relative density, the calculation of relative density will be determined in accordance with ASTM D4253 and D4254. Field density in-place tests will be performed in accordance with ASTM D1556 - Density and Unit Weight of Soil in Place by the Sand-Cone Method, ASTM D2922 - Density of Soil and Soil-Aggregate in Place by Nuclear Methods (Shallow Depth), or by such other means acceptable to the ENGINEER.

C. In case the test of the fill or backfill show non-compliance with the required density, a remedy as may be required to insure compliance shall be accomplished. Subsequent testing to show compliance shall be performed by a testing laboratory.

D. Provide test trenches and excavations including excavation, trench support and groundwater removal for the ENGINEER's field soils testing operations. The trenches and excavations shall be provided at the locations and to the depths required by the ENGINEER.

END OF SECTION

SECTION 31 0519.16 – GEOMEMBRANE FOR EARTHWORK

PART 1 – GENERAL

1.01 REQUIREMENT

A. Furnish and install geomembrane liner with associated appurtenances in accordance with the Contract Documents.

B. Soils Report: This work shall conform to the requirements of the latest Geotechnical Evaluation and or Soils Report.

1.02 REFERENCE SPECIFICATIONS, CODES AND STANDARDS

A. The supply and installation of this liner shall be in accordance with the following references:

B. ASTM Standards

D413	Rubber Property – Adhesion to Flexible Substrate
D638	Tensile Properties of Plastics
D698	Laboratory Compaction Characteristics of Soil Using Standard Effort (12 400 ft-lbf/ft3 (600 kN-m/m3))
D751	Coated Fabrics
D1004	Initial Tear Resistance of Plastics Film and Sheeting
D1204	Linear Dimensional Changes of Nonrigid Thermoplastic Sheeting or Film at Elevated Temperature
D1790	Brittleness Temperature of Plastic Sheeting by Impact
D2136	Coated Fabrics Low Temperature Bend Test
D4545	Determining the Integrity of Factory Seams Used in Joining Manufactured Flexible Sheet Geomembranes
D4833	Index Puncture Resistance of Geotextiles, Geomembranes and Related Products
D5199	Measuring Nominal Thickness of Geotextiles and Geomembranes
D5641	Geomembrane Seam Evaluation by Vacuum Chamber
D5721	Air-Oven Aging of Polyolefin Geomembranes
D5820	Pressurized Air Channel Evaluation of Dual Seamed Geomembranes
D5884	Determining Tearing Strength of Internally Reinforced Geomembranes
D6392	Determining the Integrity of Nonreinforced Geomembrane Seams Produced Using Thermo-Fusion Methods

C. GRI Standards:
1. GM 10 Specification for the Stress Crack Resistance of Geomembrane Sheet
2. GM 11 Accelerated Weathering of Geomembranes using a Fluorescent UVA Condensation Exposure Device
3. GM 12 Measurement of the Asperity Height of Geomembranes Using a Depth Gage

1.03 SUBMITTALS

A. Submittals shall be made in accordance with Section 01 33 00 – Submittal Procedures.

B. Submit a panel layout indicating the containment area arrangement, fabricated seam orientation, field seam location (if applicable), anchor trench locations, wall or concrete attachments and pipe and pile locations.

1.04 QUALITY ASSURANCE

A. The manufacturer shall provide a 5-year warranty at a minimum.

PART 2 – PRODUCTS

2.01 GENERAL CHARACTERISTICS

A. The geomembrane shall be a 45 mil reinforced polypropylene material resistant to tears, UV radiation, and consistent with site climatological conditions.

B. Material Properties:

Style	**Polypropylene**	
	ASTM	Quantity
Minimum Thickness (Nominal)	D5199	45 mil
Breaking Strength (lbs) (grab tensile at strain rate of 12 in./min.)	D751	200 min 260 typ
Elongation	D751	25%
Tear Resistance (min. Ave.) lbs	D5884	100 (160)
Puncture Resistance (min. Ave.) lbs	D4833	85 (110)
Low Temperature Impact Resistance	D2136	-40°F
Linear Dimensional Change	D1204	1.0%
Hydrostatic Resistance (psi)	D751	450 typ

C. Field Seam Properties:

Style	**Polypropylene**	
	ASTM	Quantity
Bonded Seam Strength (lbs)	D751	200
Peel Adhesion (lbs)	D413	20

D. Non-Woven Geotextile: Geotextile shall be made of staple filaments of polypropylene fiber and shall be needle-punched and heat set. The geotextile shall be heavyweight with minimum weight of 16 oz/ square yard.

PART 3 – EXECUTION

3.01 SURFACE PREPARATION

A. The contractor shall be responsible for preparing and maintaining the subgrade surface and anchor trenches in good condition suitable for laying of the geomembrane. Prepared surfaces shall be smooth and free of sharp objects, rocks, and organics (roots). If a suitable subgrade is not available then a cushion layer consisting of 100 mm (4 inches) of clean sand or a non-woven geotextile shall be placed prior to liner placement. For membrane installed on top of concrete or hard surfaces, non-woven geotextile shall be placed between the concrete/ hard surface and the membrane. Geotextile shall be per manufacturer requirements or recommendations in order to conform with the membrane's warranty.

B. The prepared subgrade should be compacted to a minimum 95% of maximum dry density according to the Standard Proctor test (ASTM D698) or as designated in the Geotechnical Evaluation and or Soils Report. The subgrade shall be firm and unyielding, and shall be compacted to a level that permits the movement of construction equipment, liner deployment equipment, and other related traffic without causing rutting and/or deformation of the surface.

C. The surface shall be leveled and prepared to a uniform finish free of abrupt or sharp changes in grade. The surface shall not include pockets or voids of any kind and should not be rutted or contain soil windrows along the surface. In addition, the surface should

be free of frost lumps and ice. The prepared subgrade should also be shaped and graded to facilitate surface drainage both prior to, and during the installation of the lining system.

D. All concrete surfaces to which the liner will attach shall have a “smooth trowel” finish and shall be level, smooth, and have all corners radiused to a minimum 25 mm (1 inch).

3.02 INSTALLATION

A. Installations shall be performed in a logical sequence by a contractor/installer experienced in this type of work.

B. The liner panels shall be installed in accordance with the manufacturer’s instructions.

END OF SECTION

SECTION 31 1000 – SITE CLEARING AND GRUBBING

PART 1 - GENERAL

1.01 THE REQUIREMENT

A. The WORK of this Section as defined in the Contract includes all work necessary to satisfactorily prepare the site as shown on the accepted drawings and as specified herein. Following this preparation, the site shall be in such a condition as to easily continue with the next operation whether it be excavating, backfilling, or any other operations that are a part of the project. Site preparation includes clearing, grubbing, grading, tree and shrub removal, native grass stripping and removing and disposing of all debris within the limits of the project and such other areas as may be indicated on the plans or required work, except such objects as are designated to remain or are to be removed in accordance with the plans. This work shall also include the preservation from injury or defacement of all vegetation and objects designated to remain.

1.02 SUBMITTALS

A. Submittals shall be made in accordance with Section 01 33 00 – Submittal Procedures.

B. Shop Drawings: Submit clearing limits, staging, and site access plans and limits.

1.03 SITE SURVEY AND LAYOUT

A. The CONTRACTOR shall establish construction, and clearing limits by providing the initial site survey and field staking. The initial staking will include property line limits, casements and access points and structure locations with 100 ft offsets. The OWNER shall provide the contractor the survey data for the project to include the survey control points, hubs, etc. and benchmarks for the site. The contractor shall layout required construction staking as defined in these Specifications.

1.04 PERMITS

A. Verify all required permits have been secured for this work. Comply with applicable local Air Pollution Control requirements. In the absence of specific ordinances, periodic watering shall be done to control dust throughout the work. Make all necessary arrangements for water required for this work.

PART 2 - PRODUCTS (NOT USED)

PART 3 - EXECUTION

3.01 PRIMARY SITE ACCESS

A. The CONTRACTOR shall provide clearing, grubbing, and stripping as defined in the contract.

B. The CONTRACTOR shall develop any necessary access to the Site, including access entrance barriers to prohibit entry of unauthorized persons as defined in the Contract. The contractor shall provide at the project site access barriers to prohibit entry of unauthorized persons as defined in the Contract.

C. Adequately support existing structures, sidewalks, slabs, pavements, utilities, and other facilities that may be affected by the proposed construction as defined in the Contract.

D. Utility Interference: Where existing utilities interfere with the WORK, notify the utility owner before proceeding in accordance with the General Conditions.

3.02 CLEARING, GRUBBING AND STRIPPING

A. Areas to be developed should be cleared of all surface and subsurface deleterious materials including debris, shrubs, and associated roots. Excavations extending below the planned finished site grades should be cleaned and backfilled with suitable material compacted to the recommendations stated in these Specifications.

B. Following clearing, the site should be striped to remove surface organic materials. Organics should be stripped from the ground surface to a depth of at least 2 to 3 inches below the surface of the organics. It may be acceptable to disk the near surface organics and blend them with the onsite soils. A geotechnical engineer should be retained to review the surface conditions prior to site grading.

C. Site should be cleared of structures, pavement, sidewalks, concrete or masonry debris, trees, logs, upturned stumps, loose boulders, and any other objectionable material of any kind which would interfere with the performance or completion of the WORK, create a hazard to safety, impair the subsequent usefulness of the WORK, or obstruct its operation. Trees and other natural vegetation outside the actual lines of construction shall be protected from damage during construction.

D. Septic tanks, drain fields, connection lines, and any other underground structures, debris, or waste shall be removed if found on the Site. All objectionable material from the clearing and grubbing process shall be removed from the Site and wasted in approved safe locations.

E. Geotechnical engineer shall be retained to view the surface conditions prior to the site grading.

3.03 OVER-EXCAVATION, REGRADING, AND BACKFILL UNDER FILL AREAS

A. All grading and excavation shall conform to the requirements of these Specifications.

3.04 EXISTING UTILITY SERVICES

A. At start of work, CONTRACTOR shall locate and identify all utility services located within the construction limits (both underground and overhead). Utilize Blue Stake services and private location services as required, including potholing as may be necessary.

B. CONTRACTOR shall disconnect or reroute all existing services, where such services will be affected by construction operations. Comply with all instructions issued during the pre-construction conference regarding coordination, advance notice, emergency repairs, etc.

C. All disconnections or terminations shall be performed in a safe manner, in accordance with applicable codes and regulations. Provide any disconnect switches, valves, plugs, tees, etc., as required for the various locations.

END OF SECTION

SECTION 31 2319 – DEWATERING

PART 1 - GENERAL

1.01 THE REQUIREMENT

A. The CONTRACTOR shall dewater all excavations, as required to complete the work in accordance with the Contract Documents. The CONTRACTOR shall secure all necessary permits to complete the requirements of this Section of the Specifications and any and all Federal, State, or local applicable requirements.

B. Soils Report: This work shall conform to the requirements of the latest Geotechnical Evaluation and Groundwater Hydrogeological Reports.

1.02 CONTRACTOR SUBMITTALS

A. Prior to commencement of excavation, the CONTRACTOR shall submit a detailed plan and operation schedule for dewatering of excavations. The CONTRACTOR may be required to demonstrate the system proposed and to verify that adequate equipment, personnel, and materials are provided to dewater the excavations at all locations and times. The CONTRACTOR's dewatering plan is subject to review by the ENGINEER. This includes all means, methods and required approval of the disposal of the water being removed.

1.03 QUALITY CONTROL

A. It shall be the sole responsibility of the CONTRACTOR to control the rate and effect of the dewatering in such a manner as to avoid all objectionable settlement and subsidence.

B. All dewatering operations shall be adequate to assure the integrity of the finished project and shall be the responsibility of the CONTRACTOR.

C. Where critical structures or facilities exist immediately adjacent to areas of proposed dewatering, reference points shall be established and observed at frequent intervals to detect any settlement that may develop. The responsibility for conducting the dewatering operation in a manner that will protect adjacent structures and facilities rests solely with the CONTRACTOR. The cost of repairing any damage to adjacent structures and restoration of facilities shall be the responsibility of the CONTRACTOR.

PART 2 - PRODUCTS

2.01 EQUIPMENT

A. Dewatering, where required, may include the use of well points, sump pumps, temporary pipelines for water disposal, rock or gravel placement, and other means. Standby pumping equipment shall be maintained on the jobsite.

PART 3 - EXECUTION

3.01 GENERAL REQUIREMENTS

A. The CONTRACTOR shall provide all permits and equipment necessary for dewatering. It shall have on hand, at all times, sufficient pumping equipment and machinery in good working condition and shall have available, at all times, competent workmen for the operation of the pumping equipment. Adequate standby equipment shall be kept available at all times to insure efficient dewatering and maintenance of dewatering operation during power failure.

B. Dewatering for pipelines shall commence when groundwater is first encountered, and shall be continuous until such times as water can be allowed to rise in accordance with the provisions of this Section or other requirements.

C. At all times, site grading shall promote drainage. Surface runoff shall be diverted from excavations. Water entering the excavation from surface runoff shall be collected in shallow ditches around the perimeter of the excavation, drained to sumps, and be pumped or drained by gravity from the excavation to maintain a bottom free from standing water.

D. Dewatering shall at all times be conducted in such a manner as to preserve the undisturbed bearing capacity of the subgrade soils at proposed bottom of excavation.

E. If foundation soils are disturbed or loosened by the upward seepage of water or an uncontrolled flow of water, the affected areas shall be excavated and replaced with drain rock (Type E).

F. The CONTRACTOR shall maintain the water level below the bottom of excavation in all work areas where groundwater occurs during excavation construction, backfilling, and up to acceptance.

G. The CONTRACTOR shall prevent flotation by maintaining a positive and continuous removal of water. The CONTRACTOR shall be fully responsible and liable for all damages that may result from failure to adequately keep excavations dewatered.

H. If well points or wells are used, they shall be adequately spaced to provide the necessary dewatering and shall be sand-packed and/or other means used to prevent pumping of fine sands or silts from the subsurface. A continual check by the CONTRACTOR shall be maintained to ensure that the subsurface soil is not being removed by the dewatering operation.

I. The CONTRACTOR shall dispose of water from the WORK in a suitable manner without damage to adjacent property. CONTRACTOR shall be responsible for obtaining any permits that may be necessary to dispose of water. No water shall be drained into work built or under construction without prior consent of the OWNER and ENGINEER. Water shall be filtered using an approved method to remove sand and fine-sized soil particles before disposal into any drainage system.

J. The release of groundwater to its static level shall be performed in such a manner as to maintain the undisturbed state of the natural foundation soils, prevent disturbance of compacted backfill and prevent flotation or movement of structures, pipelines, and sewers.

K. All temporary dewatering measures shall be removed when they are no longer needed.

END OF SECTION

SECTION 31 2333 – TRENCHING AND BACKFILLING

PART 1 - GENERAL

1.01 THE REQUIREMENT

A. Section Includes: Trench excavation, fine grading, pipe bedding, backfilling, and compaction for the following, including requirements for ditch crossings:
   1. Pipe and electrical conduits.
   2. Manholes, valves, or other accessories.
   3. Potable and non-potable water pipe appurtenances.

B. Soils Report: This work shall conform to the requirements of the latest Geotechnical Evaluation.

1.02 REFERENCES

A. American Society for Testing and Materials (ASTM):

C117	Material Finer than 75 Fm (No. 200) Sieve in Mineral Aggregates by Washing
C131	Resistance to Degradation of Small-Size Course Aggregate by Abrasion and Impact in the Los Angeles Machine
C136	Sieve Analysis of Fine and Course Aggregates
D1556	Density and Unit Weight of Soil in Place by the Sand Cone Method
D1557	Laboratory Compaction Characteristics of Soil Using Modified Effort
D2922	Density of Soil and Soil-Aggregate in Place by Nuclear Methods (Shallow Depth)
D2937	Density of Soil in Place by the Drive-Cylinder Method
D4318	Liquid Limit, Plastic Limit, and Plasticity Index of Soils
OSHA	Document 2226 Excavation

1.03 SUBMITTALS

A. Submittals shall be furnished in accordance with Section 01 3300 – Submittal Procedures.

B. Products Data: For all proposed bedding and backfill materials as defined in these Specifications.
   1. Material source
   2. Gradation
   3. Testing data

PART 2 - PRODUCTS

2.01 MATERIALS

A. General:
   1. The following types of suitable materials are defined, unless otherwise specified by the Geotechnical Evaluation.
   2. Provide material having maximum particle size not exceeding 2 inches and that is free of leaves, grass, roots, stumps, and other organic matter.
   3. Materials derived from processing demolished or removed asphalt concrete are not acceptable.

2.02 UNSUITABLE MATERIAL

A. Unsuitable materials include the materials listed below:
   1. Soils as defined unsuitable in the Geotechnical Evaluation or by the Geotechnical Engineer.
   2. Soils which, when classified under ASTM D2487 - Standard Classification of Soils for Engineering Purposes (Unified Soil Classification System), fall in the Classifications of PT, OH, CH, MH or OL.
   3. Soils, which cannot be compacted sufficiently to achieve the density specified for the intended use.
   4. Materials that contain hazardous or designated waste materials including petroleum hydrocarbons, pesticides, heavy metals, and any material which may be classified as hazardous or toxic according to applicable regulations.
   5. Soils that contain greater concentrations of chloride or sulfate ions, or have a soil resistivity or pH less than the existing on-site soils.
   6. Topsoil, except as allowed below.

2.03 USE OF FILL, BACKFILL

A. Where these Specifications conflict with the requirements of any local agency having jurisdiction or with the requirements of a pipe material manufacturer, the ENGINEER shall be immediately notified. In case of conflict between types of pipe embedment backfills, the agency-specified backfill material if that material provides a greater degree of structural support to the pipe shall be used. In case of conflict between types of trench or final backfill types, the agency-specified backfill material, if that material provides the greater in-place density after compaction shall be used.

B. Fill and backfill types shall be used in accordance with the following provisions:
   1. Pipe zone backfill shall consist of the following materials for each pipe material listed below.
      a. Mortar coated pipe, concrete pipe and un-coated ductile iron pipe shall be provided Type C or D pipe bedding and embedment backfill material.
      b. Coal tar enamel coated pipe, polyethylene encased pipe, tape wrapped pipe and other non-mortar coated pipe shall be backfilled with Type B bedding and embedment zone backfill material.
      c. Plastic pipe shall be backfilled with Type B, C, or D bedding and embedment zone backfill material.
      d. Where pipelines are installed on grades exceeding 4%, and where backfill materials are graded such that there is less than 10% passing a Number 4 sieve, trench plugs of Type H or I material shall be provided at maximum intervals of 200 feet unless indicated otherwise.
   2. Allowable trench backfill materials for pipelines as defined under the MAG Standards and Specifications.

2.04 MATERIALS TESTING

A. As defined in these Specifications.

PART 3 - EXECUTION

3.01 PREPARATION

A. General:
   1. All utility piping shall be field surveyed for location of pipe runs and joints prior to backfilling.
   2. Before laying pipes or electrical conduits in fill, place fill and compact it to not less than 1 ft above top of pipe or conduit.

3. After placing and compacting fill, excavate through fill and fine grade as required in this Section.

B. Protection: Stabilize excavation as required by OSHA or local standards, whichever is more stringent.

3.02 EXCAVATION AND GRADING

A. Exploratory Excavation:
   1. Excavate and expose buried points of connection to existing utilities where indicated on the Drawings. Excavation shall be performed prior to preparation of Shop Drawings for connections and before fabrication of pipe, and the data obtained shall be used in preparing Shop Drawings.
   2. Data, including dates, locations excavated, and sketches, shall be submitted to the ENGINEER within one week of excavation.
   3. Damage to utilities from excavation activities shall be repaired at the CONTRACTOR's expense.

B. Trench Excavation:
   1. General Requirements:
      a. If, because of soil conditions, safety requirements or other reasons, trench width at top of pipe is increased beyond width specified in the MAG Standards and Specifications, upgrade laying conditions or install stronger pipe designed in conformance with the appropriate pipe specification section for the increased trench width, without additional cost.
      b. Pipe and Electrical Conduits:
         1) Lay pipe or electrical conduits in open trench.
         2) If bottom of excavation is found to consist of rock or any material that by reason of its hardness cannot be excavated to provide uniform bearing surface, remove such rock or other material to a depth of not less than 4 inches below bottom of pipe and refill to grade with aggregate base course material or sand placed at uniform density, with minimum possible compaction, at no additional cost.
         3) If bottom of excavation is found to consist of soft or unstable material which is incapable of properly supporting pipe, remove such material to a depth and for the length required, as determined by the ENGINEER, and then refill trench to grade with aggregate base course or sand, compacted to 90 percent of maximum density.
         4) Where indicated on the Drawings, cradle pipe in concrete.
      c. For Manholes, Valves, or Other Accessories:
         1) Provide excavations sufficient to leave at least 12 inches clear between their outer surfaces and embankment or shoring which may be used to hold banks and protect them.
         2) Do not backfill with earth under manholes, vaults, tanks, or valves.
         3) Fill any unauthorized excess excavation below elevation indicated on the Drawings for foundation of any structure with sand, aggregate base material, bedding material, or concrete at no additional cost.
         4) Backfilling of Manhole Excavation: Conform to backfilling requirements as specified for pipe and utility trench backfill in this Section.
      d. Potable and Non-Potable Water Pipe Appurtenances:
         1) Lay in trenches separate from those used for sewers.
         2) Unless otherwise specified or indicated on the Drawings, lay in trenches having cover of not less than 3 feet below surface of ground and located at distance of not less than 6 feet from any parallel sewer trench, or as required by local requirements.

e. At Road Crossings or Existing Driveways:
1) Make provision for trench crossings at these points, either by means of backfills, tunnels, or temporary bridges.

C. Trench Fine Grading:
1. For Pipes 16 Inches in Nominal Diameter and Under:
a. Unless otherwise specified, accurately grade bottom of trench to provide uniform bearing and support for each section of pipe, on undisturbed soil at every point along pipe's entire length, except for portions of pipe where it is necessary to excavate for bells and for proper sealing of pipe joints.
2. For Pipe over 16 Inches in Diameter:
a. Over-excavate bottom of trench by at least 4 inches, or 1/12 outside diameter of pipe, whichever is greater.
b. Fill overcut with bedding material specified herein, and fine graded as specified above.
c. Place bedding material at uniform density, with minimum possible compaction.
d. Where trench excavation is below grade of bedding material, restore trench bottom to proper grade by backfilling and compacting backfill to 95 percent of maximum density, at no additional cost. Use bedding material as specified in this Section.
3. Bell or Coupling Holes:
a. Dig holes after trench bottom has been graded.
b. Provide holes of sufficient width to provide ample room for grouting, banding, or welding.
c. Excavate holes only as necessary in making joints and to ensure that pipe rests upon prepared trench bottom and not supported by any portion of the joint.
4. Depressions for Joints, Other than Bell and spigot:
a. Make in accordance with recommendations of joint manufacturer for particular joint used.

3.03 DISPOSAL OF EXCESS EXCAVATED MATERIAL

A. Obtain OWNER approvals for disposal of excess excavated material in designated wasting area, as defined in the contract.

3.04 BACKFILL - GENERAL

A. Backfill shall not be dropped directly upon any pipe. Backfill shall not be placed around or upon any structure until the concrete has attained sufficient strength to withstand the loads imposed.

B. Except for drainrock materials being placed in over-excavated areas or trenches, backfill shall be placed after all water is removed from the excavation and the trench sidewalls and bottom have been dried to moisture content suitable for compaction.

C. If a moveable trench shield is used during excavation, pipe installation and backfill operations, the shield shall be moved by lifting the shield free of the trench bottom or backfill and then moving the shield horizontally. No trench shields shall be dragged along the trench causing damage or displacement to the trench sidewalls, the pipe, or the bedding and backfill.

D. Immediately prior to placement of backfill materials, the bottoms and sidewalls of trenches and structure excavations shall have all loose sloughing, or caving soil and rock materials removed. Trench sidewalls shall consist of excavated surfaces that are in a relatively undisturbed condition before placement of backfill materials.

3.05 PLACING AND SPREADING OF BACKFILL MATERIALS

A. During spreading, each layer shall be thoroughly mixed as necessary to promote uniformity of material in each layer. Pipe zone backfill materials shall be manually spread

around the pipe so when compacted the pipe zone backfill will provide uniform bearing and side support.

B. Where the backfill material moisture content is below the optimum moisture content, water shall be added before or during spreading until the moisture content is between optimum and 3% over the optimum.

C. Where the backfill material moisture content is too high to permit the specified degree of compaction the material shall be dried until the moisture content is between optimum and 3% over the optimum.

3.06 COMPACTION OF FILL, BACKFILL AND EMBANKMENT MATERIALS

A. Compaction Requirements: Backfill compaction requirements shall be per the Geotechnical Evaluation and or Soils Report and per MAG Standards and Specifications.

3.07 PIPE AND UTILITY TRENCH BACKFILL

A. Pipe Zone Backfill:
   1. The pipe zone is defined as that portion of the vertical trench cross-section lying between a plane below the bottom surface of the pipe and a plane at a point above the top surface of the pipe. The bedding is defined as that portion of pipe zone backfill material between the trench sub-grade and the bottom of the pipe. The embedment is defined as that portion of the pipe zone backfill material between the bedding and a level line.
   2. After compacting the bedding, perform a final trim using a laser or approved method for establishing grade, such that each pipe section when first laid will be continually in contact with the bedding along the extreme bottom of the pipe. Excavation for pipe bells and welding shall be made as required.
   3. The pipe zone shall be backfilled with the indicated backfill material. Care to prevent damage to the pipeline coating, cathodic bonds, and the pipe itself during the installation and backfill operations shall be exercised.
   4. If a moveable trench shield is used during backfill operations, the shield shall be lifted to a location above each layer of backfill material prior to compaction of the layer. The pipe or backfill shall not be displaced while the shield is being moved.

B. Trench Zone Backfill: After the pipe zone backfills have been placed, backfilling of the trench zone may proceed. The trench zone is defined as that portion of the vertical trench cross-section lying as indicated between a plane above the top surface of the pipe and a plane at a point, 18 inches below the finished surface grade, or if the trench is under pavement, 18 inches below the roadway sub-grade.

C. Final Backfill: Final backfill is all backfill in the trench cross-sectional area within 18 inches of finished grade, or if the trench is under pavement, all backfill within 18 inches of the roadway sub-grade.

3.08 FIELD QUALITY CONTROL

A. Tests:
   1. Confirmation Tests:
      a. CONTRACTOR’s Responsibilities:
         1) Accomplish specified compaction of trench backfill.
         2) Control operations by confirmation tests to verify and confirm that compaction work complies, and is complying at all times, with requirements specified in this Section concerning compaction, control, and testing.
         3) All field soils testing will be done by a testing laboratory as specified in the Contract Documents.
         4) Copies of Confirmation Test Reports: Submit promptly to the ENGINEER.
      b. Frequency of Confirmation Testing:

1) Perform testing not less than as follows:
   a) For Trenches: At each test location include tests for each type or class of backfill from bedding to finish grade.
   b) In Open Fields: Two every 1,000 linear feet.
   c) Along Dirt or Gravel Road or off Traveled Right-of-way: Two every 500 linear feet.
   d) Crossing Paved Roads: Two locations along each crossing.
   e) Under Pavement Cuts or Within 2 Feet of Pavement Edges: one location every 400 linear feet.

2. Compliance Tests:
   a. Frequency of Testing: Periodic compliance tests will be made by the
      1) ENGINEER to verify that compaction is meeting requirements previously specified.
   b. If Compaction Fails to Meet Specified Requirements: Perform remedial work by one of the following methods:
      1) Remove and replace backfill at proper density.
      2) Bring density up to specified level by other means acceptable to the ENGINEER.
   c. Retesting:
      1) Costs of Retesting: Costs of retesting required to confirm and verify that remedial work has brought compaction within specified requirements shall be borne by the CONTRACTOR.
      2) CONTRACTOR's Confirmation Tests During Performance of Remedial Work:
         a) Performance: Perform tests in manner acceptable to the ENGINEER.
         b) Frequency: Double amount specified for initial confirmation tests.

2. Leak Testing Pipe:
   a. After Bedding the Pipe, CONTRACTOR Has the Following Option To:
      1) Leak-test pipe.
      2) Backfill to surface, at his own risk, before leak water-testing pipe. If pipe does not pass test, uncover pipe, locate leaks, repair, and retest, repeating until pipe section under test passes.

END OF SECTION

SECTION 31 2524 – ROCKFALL BARRIER

PART 1 - GENERAL

1.01 THE REQUIREMENT

A. The CONTRACTOR shall furnish all labor, materials, equipment, and supervision necessary to provide and install a 10 ft high rockfall barrier at the locations shown in the Contract Documents. The barrier shall be designed to stop a 3 ft diameter boulder under the site specific geological and slope conditions.

B. Soils Report: This work shall conform to the requirements of the latest Geotechnical Evaluation.

C. Acceptable manufacturers include Geobrugg, Walcoom, or Engineer Approved Equal.

1.02 CONTRACTOR SUBMITTALS

A. The CONTRACTOR shall submit a complete design package for the proposed rockfall barrier system including design calculations, manufacturer data sheets, structural details, connection hardware, post embedment details, anchor layout, foundation requirements, installation procedures, and certification by a licensed professional engineer registered in the State of Arizona.

B. Shop drawings shall include plan view, elevation view, barrier height, net type, mesh size, post spacing, anchorage components, energy absorption rating, and all appurtenances.

C. The CONTRACTOR shall provide product certification that the barrier system meets or exceeds the required impact-energy performance and dimensional requirements.

1.03 QUALITY CONTROL

A. The CONTRACTOR shall be responsible for ensuring all barrier materials and installation procedures comply with manufacturer requirements and project specifications.

B. Anchorage drilling, grouting, foundation preparation, post installation, mesh tensioning, and all associated work shall be performed by personnel familiar with the installation.

C. All barrier components shall be inspected prior to installation. Damaged or defective materials shall not be incorporated into the WORK.

PART 2 - PRODUCTS

2.01 GENERAL

A. The rockfall barrier system shall be a modular, engineered, flexible net barrier consisting of vertical support posts, base plates or footings, mesh panels, lateral support cables, top and bottom support cables, and anchor assemblies.

B. The system shall be capable of resisting the required impact energy determined from site conditions and the design boulder size.

C. Barrier height shall be 10 ft measured from finished grade at the base of the posts.

D. Mesh shall be high tensile steel wire rope mesh, ring net, or equivalent system approved by the ENGINEER. Mesh shall be corrosion resistant and shall include all required connection and fastening components.

E. Concrete for footings, if required, shall conform to Section 03 30 00.

PART 3 - EXECUTION

3.01 GENERAL REQUIREMENTS

A. The CONTRACTOR shall verify all field conditions, including grades, slope geometry, obstructions, and subsurface conditions prior to installation. Any discrepancies shall be reported to the ENGINEER.

B. Install rockfall barrier components in accordance with manufacturer instructions and the approved submittals.

C. All disturbed areas shall be restored to preconstruction conditions.

END OF SECTION

SECTION 31 3700 – RIP-RAP

PART 1 – GENERAL

1.01 THE REQUIREMENT

A. The WORK includes excavation, grading, and installation of riprap, boulders, soil riprap, and bedding placed at the locations shown on the DRAWINGS. The materials to be used and the construction of such structures shall be as specified herein.

1.02 REFERENCE SPECIFICATIONS, CODES AND STANDARDS

A. Reference Standards:
   1. American Association of State Highway and Transportation Officials (AASHTO):
      a. T85, Standard Method of Test for Specific Gravity and Absorption of Coarse Aggregate.
      b. T96, Standard Method of Test for Resistance to Degradation of Small-Size Coarse Aggregate by Abrasion and Impact in the Los Angeles Machine.
      c. T103, Standard Method of Test for Soundness of Aggregates by Freezing and Thawing.
      d. T104, Standard Method of Test for Soundness of Aggregate by Use of Sodium Sulfate or Magnesium Sulfate.
      e. T248, Reducing Field Samples of Aggregate Test Size.
   2. ASTM International (ASTM): D698, Standard Test Methods for Laboratory Compaction Characteristics of Soil Using Standard Effort (12 400 ft-lbf/ft3 (600 kN-m/m3)).

1.03 SUBMITTALS

A. Submittals shall be furnished in accordance with Section 01 3300 – Submittal Procedures.

B. CONTRACTOR shall submit certified laboratory test certificates for all items required in this section.

PART 2 – PRODUCTS

2.01 MATERIALS

A. Riprap
   1. Riprap used shall be the type designated on the drawings and shall conform to the following:

Riprap Designation	% Smaller than Given Size by Weight	Intermediate Rock Dimension (inches)	d_{50}* (inches)
Type VL	70 - 100 50 - 70 35 - 50 2 - 10	12 9 6 2	6**
Type L	70 - 100 50 - 70 35 - 50 2 - 10	15 12 9 3	9**
Type M	70 - 100 50 - 70 35 - 50 2 - 10	21 18 12 4	12**

Riprap Designation	% Smaller than Given Size by Weight	Intermediate Rock Dimension (inches)	d_{50}* (inches)
Type H	70 - 100 50 - 70 35 - 50 2 - 10	30 24 18 6	18
Type VH	70 - 100 50 - 70 35 - 50 2 - 10	41 33 24 9	24
*d_{50} = Mean Particle Size **Mix VL, L and M riprap with 35% topsoil (by volume) and bury it with 4 to 6 inches of topsoil, all vibration compacted, and revegetate.			

2. The riprap minimum thickness shall be 1.5 times the maximum aggregate diameter for d_{50} of 15 inches or less; 1.2 times the maximum aggregate size for d_{50} greater than 15 inches.

D_{50} (in)	D_{max} (in)	Minimum Blanket Thickness (in)
4	6	9
6	9	14
9	14	20
12	18	27
15	22	32
18	27	32
21	32	38
24	36	43

3. Neither width nor thickness of a single stone of riprap shall be less than one-third (1/3) of its length.
4. The specific gravity of the riprap shall be two and one-half (2.5) or greater.
5. Riprap specific gravity shall be according to the bulk-saturated, surface-dry basis, in accordance with AASHTO T85.
6. The bulk density for the riprap shall be 1.3 ton/cy or greater.
7. The riprap shall have a percentage loss of not more than forty percent (40%) after five hundred (500) revolutions when tested in accordance with AASHTO T96.
8. The riprap shall have a percentage loss of not more than ten percent (10%) after five (5) cycles when tested in accordance with AASHTO T104 for ledge rock using sodium sulfate.
9. The riprap shall have a percentage loss of not more than ten percent (10%) after twelve (12) cycles of freezing and thawing when tested in accordance with AASHTO T103 for ledge rock, procedure A.
10. Rock shall be free of calcite intrusions.
11. Gradation:
    a. Each load of riprap shall be reasonably well graded from the smallest to the largest size specified.
    b. Stones smaller than the two to ten percent (2 to 10%) size will not be permitted in an amount exceeding ten percent (10%) by weight of each load.
    c. Control of gradation shall be by visual inspection. However in the event ENGINEER determines the riprap to be unacceptable, ENGINEER shall pick two (2) random truckloads to be dumped and checked for gradation.
        1) Mechanical equipment and labor needed to assist in checking gradation shall be provided by CONTRACTOR at no additional cost.

12. Color:
    a. The color of the riprap shall be gray with gray/blue hues or other acceptable colors approved by ENGINEER prior to delivery to the PROJECT site.
    b. Color shall be consistent on the entire PROJECT and shall match the color of rock to be used for all other portions of the WORK.
13. Broken concrete or asphalt pavement shall not be acceptable for use in the WORK.

B. BOULDERS

1. Boulders used shall be the type designated on the DRAWINGS and shall conform to the following:

Boulder Classification	Nominal Size (inches)	Range in Smallest Dimension of Individual Rock Boulders (inches)	Maximum Ratio of Largest to Smallest Rock Dimension of Individual Boulders
B18	18	17-20	1.50
B24	24	22-26	1.50
B30	30	28-32	1.50
B36	36	34-38	1.50
B42	42	40-44	1.50
B48	48	45-51	1.50

2. The specific gravity of the boulders shall be two and one-half (2.5) or greater.
3. Boulder specific gravity shall be according to the bulk-saturated, surface-dry basis, in accordance with AASHTO T85.
4. The bulk density for the boulder shall be 1.3 ton/cy or greater.
5. The boulders shall have a percentage loss of not more than forty percent (40%) after five hundred (500) revolutions when tested in accordance with AASHTO T96.
6. The boulders shall have a percentage loss of not more than ten percent (10%) after five (5) cycles when tested in accordance with AASHTO T104 for ledge rock using sodium sulfate.
7. The boulders shall have a percentage loss of not more than ten percent (10%) after twelve (12) cycles of freezing and thawing when tested in accordance with AASHTO T103 for ledge rock, procedure A.
8. Rock shall be free of calcite intrusions.
9. Color:
    a. The color of the boulders shall be gray with gray/blue hues or other acceptable colors approved by ENGINEER prior to delivery to the PROJECT site.
    b. Color shall be consistent on the entire PROJECT and shall match the color of rock to be used for all other portions of the WORK.

C. SOIL RIPRAP

1. Rock requirements are to comply with riprap as specified in Article Materials.
2. The soil material shall be native or topsoil and mixed with sixty-five percent (65%) riprap and thirty five percent (35%) soil by volume.
3. Soil riprap shall consist of a uniform mixture of soil and riprap without voids.

D. BEDDING:

1. Gradation for Granular Bedding:

Percent by Weight Passing Square-Mesh Sieves		
U.S. Standard Sieve Size	**Type I**	**Type II**
3 inches	-	90-100
1 ½ inches	-	-
¾ inches	-	20-90
3/8 inches	100	-
No. 4	95-100	0-20
No. 16	45-80	-
No. 50	10-30	-
No. 100	2-10	-
No. 200	0-2	0-3

2. Granular bedding designation and total thickness of bedding shall be as follows.

	Minimum Bedding Thickness (in)		
	Fine Grained Soils		**Course Grained Soils**
Rip-rap Designation	**Type I**	**Type II**	**Type II**
VL, L	4	4	6
M	4	4	6
H	4	6	8
VH	4	6	8

May substitute one 12-inch layer of Type II bedding.

Fifty percent or more by weight retained on the #40 sieve.

[3] Granular bedding shall meet the same requirements for specific gravity, absorption, abrasion, sodium sulfate soundness, calcite intrusion, and freeze-thaw durability as required for riprap.

a. Broken concrete asphalt pavement or sledge, shall not be acceptable for use in the WORK. Rounded river rock is not acceptable unless specifically designated on the DRAWINGS.
b. The requirements for the wear test in AASHTO T96 shall not apply.

E. FEATURE BOULDERS:

1. Feature Boulders shall consist of the same material as boulders, differing only by size.
2. Feature Boulders shall meet the same requirements for specific gravity, absorption, abrasion, sodium sulfate soundness, calcite intrusion, and freeze-thaw durability as required for boulders
3. Feature Boulders shall have a minimum dimension of four (4) feet, or as shown on the DRAWINGS.

F. NON-WOVEN GEOTEXTILE FILTER:
   1. Where called out in the DRAWINGS, A nonwoven geotextile filter (aka Filter fabric, geotextile liner, filter cloth) shall be installed according to manufacturer's requirements and shall have properties as identified below:

Aggregate Size (In)	Grab Tensile Strength (min) ASTM D4632 (lbs)	Trapezoidal Tear Strength (min) ASTM D4533 (lbs)	Puncture Strength (min) ASTM D4833 (lbs)	Mullen Burst Strength (min) ASTM D4833 (lbs)	Permittivity ASTM D4491 (1/s)	Apparent Opening Size (max) ASTM D4751 (mm)
<16	200	75	75	200	0.5	0.21
16-24	270	100	100	400	0.5	0.21
>24	AS DIRECTED BY ENGINEER					

G. GABION:
   1. Gabions shall be made of hexagonal triple twist mesh with heavily galvanized steel wire. The maximum linear dimension of the mesh opening shall not exceed 4 ½ inches and the area of the mesh opening shall not exceed 10 square inches.
   2. Gabions shall be fabricated in such a manner that the sides, ends, and lid can be assembled at the construction site into a rectangular basket of the specified sizes. Gabions shall be of single unit construction and shall be installed according to manufacturer's recommendations.
   3. The area on which the gabion is to be installed shall be graded as shown on the drawings. Foundation conditions shall be the same as for placing rock riprap, and filter cloth shall be placed under all gabions. Where necessary, key, or tie, the structure into the bank to prevent undermining of the main gabion structure.

PART 3 – EXECUTION

3.01 PREPARATION

A. Channel slope, bottom, or other areas that are to be protected with riprap, boulders or soil riprap shall be free of brush, trees, stumps, and other objectionable material and be graded to a smooth compacted surface as shown on the DRAWINGS.

B. CONTRACTOR shall excavate areas to receive riprap to the subgrade as shown on the DRAWINGS accounting for granular bedding.

C. CONTRACTOR shall excavate areas to receive boulders or soil riprap to the specified depth (bedding material is not required for boulders and soil riprap).

D. Subgrade Materials:
   1. The subgrade materials shall be stable.
   2. If unsuitable materials are encountered, they shall be removed and replaced in accordance with Section 02200 – Earthwork, for subgrade that has been excavated in undisturbed soil.

E. Additional Compaction:
   1. Additional compaction shall not be required unless specified by ENGINEER.
   2. When subgrade is built up with embankment material it shall be compacted to ninety five percent (95%) maximum density (ASTM D698).

F. Bedding:
   1. After an acceptable subgrade is established, bedding shall be immediately placed and leveled to the specified elevation on the DRAWINGS.

2. Immediately following the placement of the bedding material, the riprap shall be placed.
3. If bedding material is disturbed for any reason, it shall be replaced and graded at CONTRACTOR's expense.
4. Contamination:
   a. In-place bedding materials shall not be contaminated with soils, debris or vegetation before the riprap is placed.
   b. If contaminated, the bedding material shall be removed and replaced at CONTRACTOR's expense.

3.02 PLACEMENT

A. RIPRAP

1. Following acceptable placement of granular bedding, riprap placement shall commence as follows:
   a. Machine Placed Riprap:
      1) Riprap shall be placed on the prepared slope or channel bottom areas in a manner which will produce a reasonably well graded mass of stone with the minimum practicable percentage of voids.
      2) Riprap shall be machine placed, unless otherwise stipulated in the DRAWINGS or SPECIFICATIONS.
      3) It is the intent of these SPECIFICATIONS to produce a fairly compact riprap protection in which all sizes of material are placed in their proper proportions. Unless otherwise authorized by ENGINEER, the riprap protection shall be placed in conjunction with the construction of embankment or channel bottom with only sufficient delay in construction of the riprap protection, as may be necessary, to allow for proper construction of the portion of the embankment and channel bottom which is to be protected.
   b. Slope Placement:
      1) When riprap is placed on slope, placement shall commence at the bottom of the slope working up the slope.
   c. The entire mass of riprap shall be placed on either channel slope or bottom so as to be in conformance with the required gradation mixture and to line, grade, and thickness shown on the DRAWINGS.
   d. Riprap shall be placed to full course thickness at one operation and in such a manner as to avoid displacing the underlying bedding material. Placing of riprap in layers, or by dumping into chutes, or by similar methods shall not be permitted.
   e. All material used for riprap protection for channel slope or bottom shall be placed and distributed such that there shall be no large accumulations of either the larger or smaller sizes of stone. Some hand placement may be required to achieve this distribution.
   f. The basic procedure shall result in larger materials flush to the top surface with faces and shapes arranged to minimize voids, and smaller material below and between larger materials.
   g. Surface grade shall be a plane or as indicated, but projections above or depressions under the finished design grade by more than ten percent (10%) of the rock layer thickness shall not be allowed.
   h. Smaller rock shall be securely locked between the larger stone. It is essential that the material between the larger stones not be loose or easily displaced by flow or by vandalism.
   i. The stone shall be consolidated by the bucket of the backhoe or other means that will cause interlocking of the material.
   j. All rock is to be placed in a dewatered condition beginning at the toe of the slope or other lowest point.

k. CONTRACTOR shall maintain the riprap protection until accepted. Any material displaced for any reason shall be replaced to the lines and grades shown on the DRAWINGS at no additional cost to OWNER. If the bedding materials are removed or disturbed, such material shall be replaced prior to replacing the displaced riprap.

2. Hand Placed Riprap:
   a. Hand placed riprap shall be performed during machine placement of riprap and shall conform to all the requirements of PART 2, above.
   b. Hand placed riprap shall also be required when the depth of riprap is less than two (2) times the nominal stone size, or when required by the DRAWINGS or SPECIFICATIONS.
   c. After the riprap has been placed, hand placing or rearranging of individual stones by mechanical equipment shall be required to the extent necessary to secure a flat uniform surface and the specified depth of riprap, to the lines and grades as shown on the DRAWINGS.
3. Soil Replacement Over Riprap:
   a. Where riprap is designated to be buried, place onsite excavated material that is free from trash and organic matter in riprap voids by washing and rodding.
   b. Prevent excessive washing of material into stream.
   c. When voids are filled and the surface accepted by ENGINEER, place a nominal six (6) inches of topsoil over the area, or as designated on the DRAWINGS.
   d. Fine grade, seed, and mulch per the SPECIFICATIONS.

B. BOULDERS
1. Following excavation and acceptance of subgrade by ENGINEER Boulder placement shall commence as follows:
   a. Boulders shall be placed on the prepared subgrade in a manner which will minimize voids.
   b. Voids between boulders exceeding 4" shall be chinked.

C. SOIL RIPRAP
1. Adjacent stockpiles of riprap and soil shall be created and mixing done at the stockpile location, not at the location where soil riprap is to be placed.
2. Mix thirty-five percent (35%) soil by volume with stockpiled riprap, using additional moisture and control procedures that ensure a homogenous mixture; where the soil fills the inherent voids in the riprap without displacing riprap.
3. With prior approval of ENGINEER, layering the riprap and soil instead of premixing may be allowed if the native soil is granular.
4. Place a first layer of smaller soil riprap of approximate d50 thickness. Then place the top layer with surface rocks that are largely d50 or greater, filling voids as necessary with smaller planted riprap. Create a smooth plane as described in Paragraph A.
5. The mixture shall be consolidated by large vibratory equipment or backhoe bucket to create a tight, dense interlocking mass.
6. The soil shall be further wetted to encourage void filling with soil.
7. Any large voids shall be filled with rock and small voids filled with soil.
8. Excessively thick zones of soil prone to washing away shall not be created (for example, no thicknesses greater than six (6) inches).
9. For buried soil riprap, the top surface shall be covered with four (4) inches of topsoil such that no rock points are protruding.
10. The final surface shall be thoroughly wetted for good compaction, smoothed and compacted by vibrating equipment; the surface shall then be hand raked to receive planting or seeding.

D. FEATURE BOULDERS

1. Feature Boulders serve an aesthetic function and as such shall be placed and rotated into final position as directed by ENGINEER in order to achieve the desired result.

3.03 REJECTION OF WORK AND MATERIALS:

A. ENGINEER will reject placed riprap, boulders, soil riprap and bedding that do not conform to this section. CONTRACTOR shall immediately remove and re-lay the riprap, boulders, soil riprap and bedding to conform to SPECIFICATIONS.

B. Riprap, boulders, soil riprap and bedding shall be rejected, which is either delivered to the job site or placed, that does not conform to this section.

C. Rejected riprap, boulders, soil riprap and bedding shall be removed from the PROJECT site by CONTRACTOR at CONTRACTOR's expense.

END OF SECTION

SECTION 32 1216 – ASPHALT PAVING

PART 1 – GENERAL

1.01 SUMMARY

A. Section includes finished construction and placement of asphalt paving, including materials, accessories, subgrade preparation, and finishing.

1.02 REFERENCES

A. MAG Standard Detail 321 – Placement and Construction of Asphalt Concrete Pavement

B. MAG Standard Detail 710 – Asphalt Concrete

PART 2 – PRODUCTS

2.01 ASPHALT BINDER

A. The asphalt binder shall be designed for use in desert climate conditions as specified in MAG Standard Detail 710 – Asphalt Concrete.

2.02 AGGREGATE

A. Coarse and fine aggregates shall conform to the requirements of MAG Standard Detail 710 – Asphalt Concrete.

PART 3 – EXECUTION

3.01 INSTALLATION

A. Installation, placement, compaction, and testing shall be in accordance with MAG Standard Detail 321 – Placement and Construction of Asphalt Concrete Pavement.

END OF SECTION

SECTION 32 1313 – CONCRETE PAVING

PART 1 – GENERAL

1.01 SUMMARY

A. Section includes finished pavement of constructed cement concrete, including materials and accessories, formwork, subgrade preparation, joints, and finishing.

1.02 REFERENCES

A. MAG Standard Detail 324 – Portland Cement Concrete Pavement

B. MAG Standard Detail 725 – Portland Cement Concrete

C. MAG Standard Detail 726 – Concrete Curing Materials

D. MAG Standard Detail 727 – Steel Reinforcement

E. MAG Standard Detail 729 – Expansion Joint Filler

F. ASTM A615/A615M – Standard Specification for Deformed and Plain Carbon-Steel Bars for Concrete Reinforcement

1.03 SUBMITTALS

A. Submittals shall be in accordance with Section 01 3300 – Submittal Procedures.

B. Samples: Submit samples when requested.

C. Shop Drawings:
   1. Submit drawings indicating the locations of all joints in concrete, including construction joints, expansion joints, isolation joints, and weakened plane or contraction joints.
   2. Submit drawings of reinforcing steel, tie bars, and connecting dowels.

PART 2 – PRODUCTS

2.01 CONCRETE MATERIALS

A. General: Concrete materials, additives, and accessories required for the Work shall be in accordance with MAG Standard Detail 725 – Portland Cement Concrete.

B. Cementitious Material: ASTM C150, Type III.

C. Aggregates: ASTM C33.
   1. Aggregates shall be provided from a single source.

D. Water: Potable water meeting the requirements of ASTM C1602.

E. Admixtures and Additives: Admixtures and additives shall not be used unless identified in the approved mix design or authorized by the Engineer.

2.02 CONCRETE MIXTURES

A. Concrete mix design shall comply with Table 725-1, Class AA, 4000 psi compressive strength, as outlined in MAG Standard Detail 725 – Portland Cement Concrete.

2.03 STEEL REINFORCEMENT

A. Reinforcing bars: ASTM A614/A615M, Grade 60, deformed.

B. Steel reinforcing materials shall be in accordance with MAG Standard Detail 727 – Steel Reinforcement and these Specifications.

2.04 CURING MATERIALS

A. Curing materials shall consist of curing paper, polyethylene film, or liquid membrane forming compounds which inhibit moisture loss and reduce temperature rise.

B. Curing materials shall conform to the requirements of MAG Standard Detail 726 – Concrete Curing Materials.

2.05 JOINT MATERIALS

A. Joint sealant shall be poured-type and shall conform to the requirements of MAG Standard Detail 729 – Expansion Joint Filler. Deviations from the standard detail shall be approved by the Engineer.

PART 3 – EXECUTION

3.01 INSTALLATION

A. Installation, shaping, forming, finishing, curing, and testing of concrete paving shall be in accordance with MAG Standard Detail 324 – Portland Cement Concrete Paving.

3.02 SUBGRADE PREPARATION

A. In accordance with MAG Standard Detail 324 – Portland Cement Concrete Paving.

3.03 PROTECTION OF PAVEMENT

A. Contractor shall be responsible for taking adequate steps to protect concrete placed during inclement weather, such as rain or hot or cold weather. Any damage resulting from exposure to rain or extreme temperatures shall be removed and replaced at the Contractor's expense.

B. No traffic or equipment shall be permitted on the pavement until the concrete has reached a compressive strength of 3500 psi.

END OF SECTION

SECTION 32 1600 – CURBS, GUTTERS, SIDEWALKS, AND DRIVEWAYS

PART 1 - GENERAL

1.01 SUMMARY

A. Section Includes: Concrete curbs, gutters, sidewalks, valley gutters, driveways, access ramps, and alley intersections.

1.02 SYSTEM DESCRIPTION

A. Performance Requirements: Construct various types of concrete curb, gutter, sidewalk, driveways, and alley intersections to dimensions and details indicated on the Drawings.

1.02 REFERENCES

A. MAG Standard Detail 324 – Portland Cement Concrete Pavement

B. MAG Standard Detail 725 – Portland Cement Concrete

C. MAG Standard Detail 726 – Concrete Curing Materials

1.03 SUBMITTALS

A. Submittals shall be made in accordance with Section 01 3300 – Submittal Procedures.

B. Product Data: Submit data completely describing products.

C. Samples: Submit samples when requested.

PART 2 - PRODUCTS

2.01 MATERIALS

A. Concrete: 4000 psi, conforming to the applicable requirements of these Specifications.

B. Curb Finishing Mortar: 1 part Portland cement to two parts sand.

C. Form Release Material: Light oil or other releasing agent of type which does not discolor concrete or interfere with the application of finishing mortar to curb tops and faces.

D. Joint Materials:
   1. Expansion: Comply with requirements as specified in these Specifications.
   2. Construction: Steel dividers or plastic inserts.

PART 3 - EXECUTION

3.01 EXAMINATION

A. Verification of Conditions: Verify field conditions, including subgrade condition and interferences, before beginning construction.

3.02 PREPARATION

A. Surface Preparation:
   1. Subgrade:
      a. Construct and compact true to grades and lines indicated on the Drawings and requirements as specified in these Specifications.
      b. Remove soft or unsuitable material to depth of not less than 6 inches below subgrade elevation and replace with satisfactory material.
   2. Forms and Subgrade: Water immediately in advance of placing concrete.

3.03 INSTALLATION

A. Special Techniques:
   1. CONTRACTOR's Option:
      a. Construct concrete curbs and gutters by conventional use of forms, or by means of curb and gutter machine when acceptable to the ENGINEER.
      b. When use of machines designed specifically for work of this Section are accepted by the ENGINEER, results must be equal to or better than those produced by use of forms.
      c. Applicable requirements of construction that apply to use of forms also apply to use of machines.
      d. Discontinue use of machines when results are not satisfactory to the ENGINEER.

B. Forms:
   1. Carefully set to line and grade and securely stake in position forms conforming to dimensions of items to be constructed.
   2. Thoroughly clean prior to each use and coat with form releasing material.

C. Expansion and Contraction Joints:
   1. Expansion Joints:
      a. Construct vertically, and at right angles to centerline of street and match joints in adjacent pavement or sidewalks.
      b. Constructed at radius points, driveways, alley entrances, and at adjoining structures.
      c. Fill joints with expansion joint filler material.
   2. Contraction Joints:
      a. Constructed not more than 15 feet apart.
      b. Make joints of construction joint material, scoring or saw cutting to depth of not less than 1-1/2 inches, and matching joints in adjacent pavement or sidewalk.

D. Concrete:
   1. Placing:
      a. Thoroughly spade concrete away from forms so that no rock pockets exist next to forms and so that no coarse aggregate will show when forms are removed.
   2. Compacting:
      a. Compact by mechanical vibrators accepted by the ENGINEER.
      b. Continue tamping or vibrating until mortar flushes to surface and coarse aggregate is below concrete surface.
   3. Form Removal:
      a. Front Form Faces: Do not remove before concrete has taken initial set and has sufficient strength to carry its own weight.
      b. Gutter and Rear Forms: Do not remove until concrete has hardened sufficiently to prevent damage to edges. Take special care to prevent damage.
   4. Finishing and Curing: Comply with requirements of these Specifications, except as modified here:
      a. As soon as curb face forms are stripped, apply finishing mortar to the top and face of curb and trowel to a smooth, even finish. Finish with fine haired broom in direction of work.
      b. Where curb is installed without integral gutter, extend finish 2 inches below grade.
      c. Edge concrete at expansion joints to 1/4-inch radius.

d. Flow lines of gutters shall be troweled smooth 4 inches out from curb face for integral curb and gutter and 4 inches on both sides of flowline for gutters without curbs.

E. Backfilling: Unless otherwise specified, backfill behind curbs, gutters, or sidewalks with soil native to area and to lines and grades indicated on the Drawings.

3.04 FIELD QUALITY CONTROL

A. Tests:
1. Curbs, Gutters, and Valley Gutters:
a. Test face, top, back, and flow line with 10-foot straight edge or curve template longitudinally along surface.
b. Correct deviations in excess of ¼-inch.
2. Gutters:
a. Frequency of Testing: When required by the ENGINEER, where gutters have slope of 0.8 foot per hundred feet or less, or where unusual or special conditions cast doubt on capability of gutters to drain.
b. Test Method: Establish flow in length of gutter to be tested by supplying water from hydrant, tank truck, or other source.
c. Required Results:
1) 1 hour after supply of water is shut off, inspect gutter for evidence of ponding or improper shape.
2) In event water is found ponded in gutter to depth greater than 1/2 inch, or on adjacent asphalt pavement, correct defect or defects in manner acceptable to the ENGINEER without additional cost to the Contract.

3.05 ADJUSTING

A. Repair portions of concrete damaged while stripping forms or, when damage is severe, replace such work at no additional cost to the Contract. Evidence of repairs shall not be noticeable in the finished product.

B. Remove and replace sections of work deficient in depth or not conforming to requirements indicated on the Drawings and specified in the Specifications at no additional cost to the Contract. Removal and replacement shall be the complete section between two joints.

END OF SECTION

SECTION 32 3113 – CHAIN LINK FENCES AND GATES

PART 1 - GENERAL

1.01 THE REQUIREMENT

A. The CONTRACTOR shall furnish all tools, equipment, materials, and supplies and shall perform all labor required to complete the WORK as indicated on the Drawings and specified herein.

B. This Section covers the work necessary for the chain link fence and gate(s), including removal of a portion of existing fence and reinstalling the chain link fence and gate(s) as shown on the Drawings and specified in the Contract Documents.

C. American Iron and Steel (AIS) requirement applies to this Section. All iron and steel products used in this project must be produced in the United States.

1.02 REFERENCE SPECIFICATIONS, CODES, AND STANDARDS

A. Reference MAG Standard Details and Specifications.

B. All Work specified herein shall conform to or exceed the applicable requirements of the referenced portions of the following publications to the extent that the provisions thereof are not in conflict with other provisions of these Specifications.

C. Comply with the applicable editions of the following codes, regulations and standards.
   1. Industry Standards:
      a. ASTM F567: Installation of Chain-Link Fence
      b. SSPWC Section 206-6 “Green Book”: Standard Specifications for Public Works Construction, Chain Link Fence
      c. SSPWC Section 304-3 “Green Book”: Standard Specifications for Public Works Construction, Chain Link Fence

D. Comply with the MAG Standard Details and Specifications, SPPWC, Standard Plans for Public Works Construction, as referenced in this Specification.

1.03 CONTRACTOR SUBMITTALS

A. Submittals shall be made in accordance with the Section 01 3300 – Submittal Procedures.

1.04 QUALITY ASSURANCE

A. General
   1. Comply with the requirements specified herein and the applicable reference Specifications of the General Requirements.
   2. Contractor shall adhere to OSHA, state, and local safety guidelines, laws, rules, and regulations.

1.05 WARRANTY

A. Provide a minimum of a five-year warranty.

PART 2 - PRODUCTS

2.01 GENERAL

A. All materials and fittings shall be in conformance with MAG Standard Detail 160 and Specification Section 420, SSPWC Section 206-6 Chain Link Fence, or as otherwise shown on the Drawings.

B. Salvaged material from the existing fence shall be undamaged and acceptable to the ENGINEER prior to reuse or reinstallation. Any material not reused shall be removed as directed by the ENGINEER.

C. Like items of materials provided hereunder shall be the end products of one manufacturer in order to achieve standardization for appearance, maintenance, and replacement.

2.02 FABRIC

A. Galvanized Fabric:
   1. Chain link fabric shall conform to the requirements of SSPWC Section 206-6.3.1.

B. Polyvinyl Chloride (PVC)-Coated Fabric:
   1. PVC-coated chain link fabric shall be in conformance with SSPWC Section 206-6.3.2.

2.03 POSTS, RAILS AND BRACES

A. The materials for posts, rails, and braces shall be in conformance with SSPWC Section 206-6.2.

2.04 TENSION WIRES AND FABRIC TIES

A. Tension wires and ties used to fasten the fabric to posts, rails, and gate framed shall be in conformance with SSPWC Section 206-6.4.

2.05 TRUSS OR TENSION RODS

A. Truss or tension rod used in construction shall be in conformance with SSPWC Section 206-6.5.

2.06 FITTINGS

A. All required fittings and hardware shall be galvanized and in conformance with SSPWC Section 206-6.6.

2.07 BARBED WIRE

A. Barbed wire shall be in conformance with SSPWC Section 206-6.7.

2.08 REPAIR OF DAMAGED COATINGS

A. Repairs to abraded or otherwise damaged zinc coating shall be made in conformance with SSPWC Section 206-6.8.

2.09 GATES

A. Gates shall be swing or sliding as indicated, complete with latches, stops, keepers, hinges, or rollers and roller tracks.

B. Gate frames shall be constructed of tubular members welded at all corners or assembled with fittings. On steel, welds shall be painted with zinc-based paint. Where corner fittings are used, gates shall have truss rods of 5/16-inch minimum nominal diameter to prevent sag or twist. Gate leaves shall have vertical intermediate bracing as required, spaced so that no members are more than 8 feet apart. Gate leaves 10 feet or over shall have a horizontal brace or one 5/16-inch minimum diagonal truss rod. When fence has barbed wire top, the end members of the gate frames shall be extended 1 foot above the top horizontal member to which three strands of barbed wire, uniformly spaced, shall be attached by use of bands, clips, or hook bolts.

C. Fabricate frames of standard weight pipe 1.90 inches outside diameter, weight 2.72 pounds per linear foot.

D. Gate fabric shall be the same type as used in the fence construction. The fabric shall be attached securely to the gate frame at intervals not exceeding 15 inches.

E. Gate hinges shall be of adequate strength for gate and with large bearing surfaces for clamping in position. The hinges shall not twist or turn under the action of the gate. The gates shall be capable of being opened and closed easily by one person.

F. Gate latches, stops, and keepers shall be provided for all gates. Latches shall have a plunger-bar arranged to engage the center stop, except that for single gates of openings less than 10 feet wide a forked latch may be provided. Latches shall be arranged for locking with padlocks. Center stops shall consist of a device arranged to be set in concrete and to engage a plunger-bar of the latch of double gates. No stop is required for single gates. Keepers shall consist of a mechanical device for securing the free end of the gate when in the full open position.

1. Double Gates: Size and configuration shall be as indicated. Provide gate stops for all double gates, consisting of mushroom type or flush plate with anchors. Set in concrete to engage the center drop rod or plunger bar. Provide locking device and padlock eyes as an integral part of the latch, requiring one padlock for locking both gate leaves.
2. Sliding Gates: Provide manufacturer's standard heavy-duty track, ball-bearing hanger sheaves, overhead framing and supports, guides, stays, bracing, and accessories as required. All sliding gates shall be rolling, cantilever slide, or overhead (top) suspended, as indicated on Drawings.

G. Rolling gate track rollers shall be malleable iron or heavy pressed steel construction, with provision for regular grease lubrication. Ground rollers shall have malleable iron or heavy pressed-steel hubs with similar provision for lubrication. Gate track shall be Schedule 40 pipe, firmly attached to support posts on 7-foot-maximum centers. Gates more than 8 feet in height shall have three tracks. Rolling gate frames shall be constructed similar to swing gates except diagonal bracing shall reflect different support type.

H. Cantilever gate rollers shall have heavy malleable rollers, needle or ball bearings with fittings for regular lubrication. Maximum spacing of support posts is 10 feet. Additional weight-supporting posts with lower roller shall be provided on 10-foot-maximum centers. Support posts shall be 4 inches in diameter, Schedule 40, set at 36 inches minimum depth. Top and lower rails of gate shall be 2-3/8 inches in OD, Schedule 40 pipe. Vertical support posts shall be on 6-foot maximum spacing, 1-7/8-inch OD, Schedule 40 pipe, all diagonal bracing 1-5/8-inch OD, Schedule 40 pipe, all connections welded and painted.

I. Keeper: Provide keeper for all vehicle gates that automatically engages the gate leaf and holds it in the OPEN position until manually released.

2.10 REMOVABLE FENCE PANELS

A. Removable fence panels shall be provided as indicated on the Drawings. The total length of any removable fence section shall be divided into equal removable fence panels with panel length not to exceed 10 feet. The posts on either side of removable fence panels shall be hot-dip galvanized pipe, 3 inches OD, 5.71 pounds per linear foot.

2.11 CONCRETE

A. Materials as specified in these Specifications. Proportions shall be 1:2:4. Compressive strength shall not be less than 2,000 psi at 28 days.

PART 3 - EXECUTION

3.01 INSTALLATION

A. Installation of fencing shall meet the requirements of ASTM F567.

B. Fence construction shall be in conformance with MAG Standard Detail 160 and Specification Section 420, SSPWC Section 304-3.2

C. Installation of gates shall be in conformance with the manufacturer’s installation instructions, MAG Standard Detail 160 and Specification Section 420, and SSPWC Section 304-3.3.

3.02 REMOVAL AND RESETTING OF EXISTING FENCE

A. All accessories shall be removed carefully and all materials stored in a safe place until required for resetting. The CONTRACTOR shall provide all new material necessary to replace lost or damaged material and as required for a complete and satisfactory installation. In general, the salvaged fencing shall be reinstalled as specified for new material. All concrete shall be removed from posts before they are reset. The CONTRACTOR may furnish all new materials, rather than salvage and reuse the existing fence.

3.03 CLEANUP

A. Upon completion of the fence installation, clean up all waste material resulting from the operation. The clean-up shall be subject to acceptance by the ENGINEER.

END OF SECTION

SECTION 33 0505.31 – HYDROSTATIC TESTING

PART 1 – GENERAL

1.01 THE REQUIREMENT

A. The CONTRACTOR shall clean, flush, and test hydraulic structures and appurtenant piping, in accordance with ACI 350.1/350.1R Tightness Testing of Environmental Concrete Structures. However, if any local or state ordinances/regulations exist regarding this test procedure the ENGINEER should be notified immediately. The ENGINEER shall review the regulation and determine if it is applicable to the project prior to commencement of construction. Following the review, the most stringent will govern.

B. The ACI 350.1/350.1R standard hydrostatic test (HST) criteria for these hydraulic structures are expressed as the maximum allowable percent loss per day of the test water volume. The designation for these structures is HST-050 or 0.050% per day of volume loss for all the structures.

C. It is the intent of this specifications Section to compliment the requirements of ACI 350.1/350.1R not to override them. All testing requirements shall be per section 1.01A.

1.02 SUBMITTALS

A. Furnish per Section 01 3300 – Submittal Procedures

B. Testing Plan, Methods, and Schedule for preliminary and final testing

C. Testing Documentation Recording Forms for preliminary and final testing

D. Methods of leak repair and product information

E. Upon completion of the test submit the completed Testing Documentation Recording Form showing results of test, dates etc. as required by the form for preliminary and final testing.

PART 2 – PRODUCTS

2.01 MATERIALS REQUIREMENTS

A. Temporary valves, bulkheads, or other water control equipment and materials shall be as determined by the CONTRACTOR subject to the ENGINEER's review. No materials shall be used which would be injurious to the facility or its future function.

PART 3 – EXECUTION

3.01 GENERAL

A. The CONTRACTOR shall develop and submit for review a form that will be used to record and document the testing as required in this Section. At a minimum, the form shall include the project name, tank description, tank size, width, height, max operating depth, total volume in gallons of water required for testing, calculating allowable loss without evaporation, recorded readings with applicable reading dates, daily weather conditions, water temperature at 18 inches, recorded evaporations and signature and date blocks for the person recording the readings and a witness. In addition, the preliminary testing form shall include space for documentation of the visual inspection of each tank wall, which shall describe any leaks. The description of the leaks shall define the type of leak and methods of resolution.

B. Water for testing will be furnished by the OWNER; however, the CONTRACTOR shall make all necessary provisions for conveying the water from the OWNER designated source to the points of use as per the Contract.

C. The initial filling of a new tank shall not exceed a rate of 4ft/hr. Filling shall be continued until the water surface is at the design maximum liquid level or 4 inches below any fixed overflow level, whichever is lower.

D. All hydraulic structures and appurtenant pressure piping shall be tested; those for potable water shall also be disinfected. Disinfection shall be accomplished by chlorination. All chlorinating and testing operations shall be done in the presence of the ENGINEER.

E. If industrial paint finishes or other protective coatings are to be applied to the interior surfaces of the hydraulic structure, such coatings shall be applied after all testing operations have been completed, unless approved by the ENGINEER. However, all construction joints in the tanks shall be caulked as per these Specifications.

3.02 TESTING OF HYDRAULIC STRUCTURES

A. General: Testing shall conform to American Concrete Institute (ACI) Standard 350.1/350.1R Tightness Testing of Environmental Engineering Concrete Structures. Tank structure testing and backfilling shall not be performed sooner than 14 days after all associated tank structural roof systems have been completed or at least 85% of design strength for all concrete elements. All pressure relief valves and wall penetrations shall be properly plugged prior to the hydrostatic test as to prevent leakage through the valve during testing. The test shall consist of filling the structure with water to the maximum operating water surface.

B. Leakage Test and Repairs:

1. After the structure has been filled to the test level, the water loss leakage test shall be performed as follows: an initial water level reading shall be made and recorded every 24 hours until the test has been completed. Concrete will be allowed to saturate for three days. After which the actual test shall begin. Measurements shall be taken every 24 hours at 2 separate locations if possible. The test period shall be at least the theoretical time required to lower the water surface 3/8-inches. assuming a loss of water at the maximum allowable rate. The test period need not be longer than five days. In uncovered or well-ventilated covered tanks evaporation and precipitation shall be measured. At the end of the test period, the water surface, temperature, evaporation, and precipitation measurements shall be recorded at the previous locations. The structure shall be considered to have passed the test if the calculated change in water volume in the tank is less that or equal to the HST-050 criteria or 0.05% of the total volume of the tank. The volume loss if necessary can be corrected for evaporation, precipitation, and temperature. The tank has failed if the loss is greater that the required criteria.
2. A restart of the test shall be required when test measurement become unreliable due to unusual precipitation or other external factors.
3. The CONTRACTOR shall be permitted to immediately retest a tank failing the test when no visible leakage is exhibited. If the tank fails the second time then the CONTRACTOR shall take other methods to determine the probable area(s) of leakage. The tank shall only be retested after the most probable area(s) of leakage are repaired. Any cracks shall be repaired before each test in accordance with applicable Sections of Division 03 – Concrete. The tanks shall be retested until they meet the required criterion.

3.03 TESTING OF APPURTENANT PIPING

A. Piping appurtenant to hydraulic structures shall be tested as specified in pertinent Sections of these Specifications and Contract Documents.

END OF SECTION

SECTION 33 0130.13 – SEWER AND MANHOLE TESTING

PART 1 - GENERAL

1.01 THE REQUIREMENT

A. Perform all pipeline flushing and testing, complete, for sanitary sewer and storm drainage system piping as specified herein and in accordance with the requirements of the Contract Documents.

B. Be responsible for providing conveyance of test water to the point of usage and also for disposal, as required, of water used in the testing operations.

1.02 REFERENCE SPECIFICATIONS, CODES, AND STANDARDS

A. Commercial Standards:

B. ASTM A746 Ductile Iron Gravity Sewer Pipe

C. ASTM F1417 Standard Test Method for Installation Acceptance of Plastic Gravity Sewer Lines Using Low-Pressure Air

1.03 SUBMITTALS

A. Submittals shall be made in accordance with Section 01 3300 – Submittal Procedures.

B. Proposed plans for testing of the sanitary sewer system. The methods used may be air or water as described herein. If water method is used then provide the water conveyance, control, and disposal. Advance written notice of its proposed testing schedule for review and concurrence of the ENGINEER shall be submitted.

PART 2 - PRODUCTS

2.01 MATERIALS REQUIREMENTS

A. Temporary valves, plugs, bulkheads, and other air pressure testing and water control equipment and materials shall be provided, subject to the ENGINEER's review. No materials shall be used which would be injurious to pipeline structure and future function. Air test gauges shall be laboratory-calibrated test gauges and shall be recalibrated by a certified laboratory at the Contractor’s expense prior to the leakage test, if required by the ENGINEER.

PART 3 - EXECUTION

3.01 GENERAL

A. Unless otherwise specified, water for testing will be furnished by OWNER; however, all necessary provisions for conveying the water from the designated source to the points of use shall be made by the CONTRACTOR.

B. Release of water from pipelines, after testing has been completed, shall be performed as reviewed by the ENGINEER.

C. All testing operations shall be performed in the presence of the ENGINEER.

3.02 TESTING OF PIPING

A. General: All gravity sewer pipes and service laterals shall be tested for exfiltration and/or infiltration and deflection, as specified. All manholes shall be tested for leakage, as specified. Manholes shall be tested prior to backfill placement. Reference applicable Sections of Division 31 – Earthwork, for pipe leak testing prior to backfill placement. All leakage tests shall be completed and approved prior to placing of permanent resurfacing. When leakage or infiltration exceeds the amount allowed by the Specifications, locate the

leaks, and make the necessary repairs or replacements in accordance with the Specifications to reduce the leakage or infiltration to the specified limits. Any individually detectable leaks shall be repaired, regardless of the results of the tests.

B. Leakage Tests: Sanitary sewer systems shall be tested for leakage as follows:
   1. Gravity sewers 24 inches or less in diameter, where difference in elevation between inverts of adjacent manholes is 10 feet or less; water exfiltration test or water infiltration test as approved. The ENGINEER may allow substitution of an air pressure test for the water exfiltration test.
   2. Gravity sewers 24 inches or less in diameter, where difference in elevation between inverts of adjacent manholes is greater than 10 feet: air pressure test or water infiltration test, or as approved.
   3. Gravity sewers greater than 24 inches in diameter: air pressure test or water infiltration test, or as approved.
   4. Pressure sewers (force mains): water pressure test at 120% of maximum operating pressure, measured at the lowest point of the pipeline section being tested.

C. Water Exfiltration Test: Each section of sewer shall be tested between successive manholes by closing the lower end of the sewer to be tested and the inlet sewer of the upper manhole with stoppers. The pipe and manhole shall be filled with water to a point 4 feet above the centerline of the sewer at the center of the upper manhole; or if ground water is present, 4 feet above the average adjacent ground water level, whichever is higher.
   1. The allowable leakage will be computed by the formula:

		$E = 0.000012\ LD\ (H)^{1/2}$
in which	E =	Allowable leakage in gallon per hour of sewer tested
	L =	Length of sewer and lateral connections tested, in feet
	D =	Internal diameter of the pipe in inches
	H =	Difference in elevation between the water surface in the upper manhole and the centerline of the pipe at the lower manhole; or if ground water is present above the centerline of the pipe in the lower manhole, the difference in elevation between the water surface in the upper manhole and ground water at the lower manhole.

D. Water Infiltration Test: If, in the opinion of the ENGINEER, excessive ground water is encountered in the construction of a section of the sewer, the exfiltration test for leakage shall not be used.
   1. The end of the sewer at the upper structure shall be closed sufficiently to prevent the entrance of water, and pumping of ground water shall be discontinued for at least 3 days, after which the section shall be tested for infiltration.
   2. The infiltration into each individual reach of sewer between adjoining manholes shall not exceed that allowed by the formula above, where H is the difference in the elevation between the ground water surface and the invert of the sewer at the downstream manhole.
   3. Unless otherwise specified, infiltration will be measured using measuring devices approved by the ENGINEER.

E. Water Pressure Test: Preparatory to testing, the section of the pipeline to be tested shall be filled with water and placed under a slight pressure for at least 48 hours. The pipeline shall then be brought up to the test pressure specified and maintained on the section under test for a period of not less than 4 hours.
   1. Accurate means shall be provided for measuring the quantity of water required to maintain full pressure on the line for the test period, which volume shall not exceed:

		$L = \frac{CN\ D\ (P)^{1/2}}{1850}$
in which	L =	Maximum allowable leakage in gallons per hour for the section of pipeline tested
	N =	Number of joints in length tested
	D =	Diameter of pipe in inches
	P =	Test pressure in psi
	C =	1.0 for reinforced concrete pressure pipe with rubber ring joints, cylinder type
	C =	3.0 for reinforced concrete pressure pipe with rubber joints, non-cylinder type
	C =	0.50 for cast iron pipe with mechanical or rubber gasket joints and asbestos-cement pipe
	C =	1.0 for other type of cast iron joints (calked) and other types of pipe

F. Deflection Test: All flexible and semi-rigid main line pipe shall be tested for deflection, joint displacement, or other obstruction by passing a rigid mandrel through the pipe by hand, not less than 30 days after completion of the trench backfill, but prior to permanent resurfacing. The mandrel shall be a full circle, solid cylinder, or a rigid, non-adjustable, odd-numbered leg (9-leg minimum) steel cylinder, approved by the ENGINEER as to design and manufacture. The circular cross section of the mandrel shall have a diameter of at least 95% of the specified average inside pipe diameter of the pipe and the minimum length of the circular portion of the mandrel shall be equal to the nominal diameter of the pipe. Obstructions encountered by the mandrel shall be corrected.

3.03 TESTING OF MANHOLES

A. All sewer manholes shall be hydrostatically tested for leakage after installation, but prior to being backfilled. Prior to hydrostatic testing, all manholes shall be visually inspected for leaks. All leaks or cracks shall be repaired, prior to hydrostatic testing, to the satisfaction of the ENGINEER. All pipes entering the manhole shall be sealed at a point outside the manhole walls so as to include testing of the pipe/manhole joints. The manhole shall be filled with water to a level 2 inches below the top of the frame. Safety lines shall be secured to all plugs utilized. After a period of at least one hour to allow the water level to stabilize, the manhole shall be refilled and the water level shall be checked. The water level shall again be checked after a period of 4 hours. If the water level is reduced by more than ¼-inch, the leakage shall be considered excessive, the required repairs shall be made and the manhole retested. The exterior of the manhole shall be inspected during this period for visible evidence of leakage. Visible moisture, sweating, or beads of water on the exterior of the manhole shall not be considered leakage, but any water running across the surface will be considered leakage and shall be repaired to the satisfaction of the ENGINEER regardless of the volume of water lost.

END OF SECTION

SECTION 33 0519 – DUCTILE IRON PIPE

PART 1 - GENERAL

1.01 THE REQUIREMENT

A. Provide ductile iron pipe and perform all appurtenant work, complete in place, in accordance with the Contract Documents.

1.02 REFERENCE SPECIFICATIONS, CODES AND STANDARDS

A. Commercial Standards:

ANSI/AWWA	
C104/A21.4	Cement-Mortar Lining for Ductile-Iron Pipe and Fittings for Water
C105/A21.5	Polyethylene Encasement for Ductile-Iron Piping for Water and Other Liquids
C110/A21.10	Ductile-Iron and Gray-Iron Fittings, 3 inches through 48 inches for Water and Other Liquids
C111/A21.11	Rubber-Gasket Joints for Ductile-Iron and Gray-Iron Pressure Pipe and Fittings
C115/A21.15	Flanged Ductile-Iron and Gray-Iron Pipe with Threaded Flanges
C150/A21.50	Thickness Design of Ductile-Iron Pipe
C151/A21.51	Ductile-Iron Pipe, Centrifugally Cast in Metal Molds or Sand-Lined Molds, for Water or Other Liquids
C153/A21.53	Ductile-Iron Compact Fittings, 3 inches through 12 inches for Water and Other Liquids
AWWA	
C209	Cold-Applied Tape Coatings for the Exterior of Special Sections, Connections, and Fittings for Steel Water Pipelines
C214	Tape Coating Systems for the Exterior of Steel Water Pipelines
C600	Installation of Ductile Iron Water Mains and Their Appurtenances
ASTM	
A746	Ductile Iron Gravity Sewer Pipe
C150	Specification for Portland Cement

1.03 SUBMITTALS

A. Submittals shall be made in accordance with Section 01 3300 – Submittal Procedures.

B. Shop Drawings: Submit shop drawings of pipe and fittings in accordance with the requirements in Section 01 3300 – Submittal Procedures, the requirements of the referenced standards, and the following supplemental requirements as applicable:

1. Dimensional drawings of all valves, fittings, and appurtenances.
2. For pipe 24 inches in diameter and larger, line layout and marking diagrams which indicate the specific number of each fitting and the location and the direction of each fitting in the completed line. In addition, the line layouts shall include: the pipe station and invert elevation at all changes in grade or horizontal alignment; all elements of curves and bends, both in horizontal and vertical alignment; and the limits of each reach of restrained joints, or of concrete encasement.

1.04 QUALITY ASSURANCE

A. All pipe shall be subject to inspection at the place of manufacture in accordance with the provisions of the referenced standards, as supplemented by the requirements herein.

B. During the manufacture of the pipe, the ENGINEER shall be given access to all areas where manufacturing is in process and shall be permitted to make all inspections necessary to confirm compliance with the Specifications.

PART 2 - PRODUCTS

2.01 GENERAL

A. Mortar-lined ductile iron pipe shall conform to ANSI/AWWA C151, C104 and C105, subject to the following supplemental requirements. The pipe shall be of the diameter and class noted in the Contract Documents. The pipe shall be furnished complete with rubber gaskets, with all specials and fittings provided as required under the Contract Documents.

B. Markings: Legibly mark specials 24 inches in diameter and larger in accordance with the laying schedule and marking diagram. All fittings shall be marked at each end with top field centerline.

C. Handling and Storage: The pipe shall be handled by devices acceptable to the ENGINEER, designed and constructed to prevent damage to the pipe coating/exterior. The use of equipment that might injure the pipe coating/exterior will not be permitted. Stockpiled pipe shall be suitably supported and shall be secured to prevent accidental rolling. All other pipe handling equipment and methods shall be acceptable to the ENGINEER.

D. Laying Lengths: Maximum pipe laying lengths shall be 20 feet with shorter lengths provided as required by the Drawings.

E. Finish: The pipe shall have smooth, dense interior surfaces, and shall be free from fractures, excessive interior surface crazing, and roughness.

F. Closures and Correction Pieces: Closures and correction pieces shall be provided as required so that closures may be made due to different headings in the pipe laying operation and so corrections may be made to adjust the pipe laying to conform to pipe stationing shown on the Drawings. The locations of correction pieces and closure assemblies are shown on the Drawings. Any change in location or number of said items shall be acceptable to the ENGINEER.

2.02 PIPE DESIGN CRITERIA

A. General: Ductile iron pipe shall be designed in accordance with the requirements of ANSI/AWWA C150 as applicable and as modified in this Section.

B. Pipe Wall Thickness for Internal Pressure: The pipe shall be designed with a net thickness to withstand the design pressure in accordance with the hoop stress formula.

C. Pipe Wall Thickness for External Load: The pipe shall also be designed with a net thickness to withstand external loads using ANSI/AWWA C150 Design Equation (2) with the appropriate bending moment and deflection coefficients for Laying Condition Types 4 and 5 as applicable.

D. The pipe deflection shall be checked using ANSI/AWWA C150 Design Equation (3) and the coefficients stated above. The allowable deflection shall not exceed the manufacturer’s recommended amount.

E. In lieu of ANSI/AWWA C150 Design Equation (4), the earth loads will be computed using the following 2 equations for trench or embankment loading as applicable:

1. Trench Condition:

$$W_d = C_d w B_d^2$$

Where:
- W_d = Earth Load in pounds per linear foot
- C_d = Calculation Coefficient
- Ku' = [0.13]
- w = [120] lb/ft^3
- B_d = Trench width at top of pipe, feet

2. Positive Projecting Embankment Condition:

$$W_c = C_c w B_c^2$$

Where:
- W_c = Earth Load in pounds per linear foot
- C_c = Calculation Coefficient (based on r_{sd}P of 0.25)
- Ku = [0.19]
- w = [120] lb/ft^3
- B_c = Outside diameter of pipe, feet

F. The above 2 formulas are based on a depth of cover of 10 feet or greater. For depths of cover of less than 10 feet, HS-20 live load shall be included. For depths of cover of 3 feet or less, HS-20 live load plus impact shall be included. The determination of live load and impact factors shall be as recommended by AASHTO in "Standard Specifications for Highway Bridges."

G. If the calculated deflection exceeds 0.0225 times the nominal diameter, the pipe class shall be increased.

H. Minimum Pipe Wall Thickness: In addition to the requirements of this Section, the minimum wall thickness shall be in accordance with Table 50.5 of ANSI/AWWA C150.

2.03 MATERIALS

A. Ductile Iron Pipe: Pipe materials shall conform to the requirements of ANSI/AWWA C151.

B. Cement: Cement for mortar lining shall conform to the requirements of ANSI/AWWA C104, provided, that cement for mortar lining shall be Type II or V. Cement shall not originate from kilns that burn metal-rich hazardous waste fuel, nor shall a fly ash or pozzolan be used as a cement replacement.

2.04 SPECIALS AND FITTINGS

A. Fittings for ductile iron pipe shall conform to the requirements of ANSI/AWWA C153/A21.53 for diameters 3 inches through 24 inches and shall have a minimum pressure rating of 350 psi. Ductile iron fittings larger than 24 inches shall conform to the above referenced standard with the necessary modifications for the larger size.

2.05 DESIGN OF PIPE

A. General: The pipe furnished shall be ductile iron pipe, with rubber-gasketed joints or as specified on the plans.

B. The pipe shall be designed, manufactured, tested, inspected, and marked according to applicable requirements previously stated and except as hereinafter modified, shall conform to ANSI/AWWA C151.

C. Pipe Dimensions: The pipe shall be of the diameter and class shown. The minimum wall thickness for each pipe size shall be as specified or shown.

D. Fitting Dimensions: The fittings shall be of the diameter and class shown.

E. Joint Design: Ductile iron pipe and fittings shall be furnished with mechanical joints, push-on joints, flanged joints, and restrained joints as required.
   1. Mechanical and push-on joints shall conform to ANSI/AWWA C111/A21.11.
   2. Mechanical and push on joints gaskets shall be “fast Grip” Gaskets by American Ductile Iron Pipe, or “Field Locks” Gaskets by U.S. Pipe, or equal.
   3. Restrained joints shall be "Lok-Ring" Restrained Joint by American Ductile Iron Pipe, "TR FLEX" Restrained Joint by U.S. Pipe, or ENGINEER-approved equal. Provide as indicated on the plans.
   4. Flanged joints shall conform to ANSI/AWWA C115/A21.15. Special ductile iron flanges to match up to 250 psi valve and equipment flanges shall meet ANSI/AWWA C110 and be specially drilled to ANSI/ASME B16.1 Class 250 standard dimensions with raised face.

F. For bell-and-spigot ends with rubber gaskets, the clearance between the bells and spigots shall be such that when combined with the gasket groove configuration and the gasket itself, will provide watertight joints under all operating conditions when properly installed. Require the pipe manufacturer to submit details complete with significant dimensions and tolerances and to submit performance data indicating that the proposed joint has performed satisfactorily under similar conditions. In the absence of a history of field performance, the results of a test program shall be submitted.

G. Shop-applied interior linings and exterior coatings shall be held back from the ends of the pipe as shown or as otherwise acceptable to the ENGINEER.

2.06 CEMENT-MORTAR LINING

A. Cement-Mortar Lining for Shop Application: Except as otherwise provided herein, interior surfaces of all ductile iron pipe, fittings and specials shown on the plans shall be cleaned and lined in the shop with cement-mortar lining applied centrifugally in conformity with ANSI/AWWA C104. During the lining operation and thereafter, the pipe shall be maintained in a round condition by suitable bracing or strutting. The lining machines shall be of a type that has been used successfully for similar work. Every precaution shall be taken to prevent damage to the lining. If lining is damaged or found faulty at delivery site, the damaged or unsatisfactory portions shall be replaced with lining conforming to these Specifications.

B. The minimum lining thickness shall be as follows:

Nominal Pipe Diameter (inches)	**Minimum Lining Thickness (inches)**
3 - 12	$^{1}/_{8}$
14 - 24	$^{3}/_{16}$
30 - 54	$^{1}/_{4}$

C. Protection of Pipe Lining/Interior: All shop-applied cement mortar lining shall be given a seal coat of asphaltic material in conformance with ANSI/AWWA C104.

2.07 EXTERIOR COATING OF PIPE

A. Exterior Coating of Exposed Piping: The exterior surfaces of pipe which will be exposed to the atmosphere inside structures or above ground shall be thoroughly cleaned and then given a shop coat of rust-inhibitive primer conforming to the requirements of these Specifications.

B. Exterior Coating of Buried Piping: The exterior coating shall be an asphaltic coating approximately 1mil thick. Where noted as required by the ENGINEER, pipe will be encased in polyethylene sleeves.

PART 3 - EXECUTION

3.01 INSTALLATION OF PIPE

A. Handling and Storage: All pipe, fittings, etc., shall be carefully handled and protected against damage, impact shocks, and free fall. All pipe handling equipment shall be acceptable to the ENGINEER. Pipe shall not be placed directly on rough ground but shall be supported in a manner that will protect the pipe against injury whenever stored at the trench site or elsewhere. No pipe shall be installed where the lining or coating show defects that may be harmful as determined by the ENGINEER. Such damaged lining or coating shall be repaired, or a new undamaged pipe shall be furnished and installed.

B. All pipe that is damaged prior to Substantial Completion shall be repaired or replaced.

C. Inspect each pipe and fitting prior to installation to ensure that there are no damaged portions of the pipe.

D. Before placement of pipe in the trench, each pipe or fitting shall be thoroughly cleaned of any foreign substance, which may have collected thereon, and shall be kept clean at all times thereafter. For this purpose, the openings of all pipes and fittings in the trench shall be closed during any interruption to the WORK.

E. Pipe Laying: The pipe shall be installed in accordance with ANSI/AWWA C600.

F. Pipe shall be laid directly on the bedding material. No blocking will be permitted, and the bedding shall be such that it forms a continuous, solid bearing for the full length of the pipe. Excavations shall be made as needed to facilitate removal of handling devices after the pipe is laid. Bell holes shall be formed at the ends of the pipe to prevent point loading at the bells or couplings. Excavation shall be made as needed outside the normal trench section at field joints to permit adequate access to the joints for field connection operations and for application of coating on field joints.

G. Each section of pipes 24 inches in diameter and larger shall be laid in the order and position shown on the laying schedule. In laying pipe, it shall be laid to the setline and grade, within approximately one inch plus or minus. On grades of zero slopes, the intent is to lay to grade.

H. Where necessary to raise or lower the pipe due to unforeseen obstructions or other causes, the ENGINEER may change the alignment and/or the grades. Such change shall be made by the deflection of joints, by the use of bevel adapters, or by the use of additional fittings. However, in no case shall the deflection in the joint exceed the maximum deflection recommended by the pipe manufacturer. No joint shall be misfit any amount that will be detrimental to the strength and water tightness of the finished joint.

I. Except for short runs that may be permitted by the ENGINEER, pipes shall be laid uphill on grades exceeding 10%. Pipe that is laid on a downhill grade shall be blocked and held in place until sufficient support is furnished by the following pipe to prevent movement. All bends shall be properly installed as shown.

J. Shallow buried pipes and pipes underneath structures shall be concrete encased where noted in the Contract Documents.

K. Cold Weather Protection: No pipe shall be installed upon a foundation into which frost has penetrated or at any time that there is a danger of the formation of ice or penetration of frost at the bottom of the excavation. No pipe shall be laid unless it can be established that the trench will be backfilled before the formation of ice and frost occurs.

L. Pipe and Specials Protection: The openings of all pipe and specials shall be protected with suitable bulkheads to prevent unauthorized access by persons, animals, water, or any undesirable substance. At all times, means shall be provided to prevent the pipe from floating.

M. Pipe Cleanup: As pipe laying progresses, the pipe interior shall be kept free of all debris. Completely clean the interior of the pipe of all sand, dirt, mortar splatter and any other debris following completion of pipe laying, pointing of joints and any necessary interior repairs prior to testing and disinfecting the completed pipeline.

3.02 RUBBER GASKETED JOINTS

A. Rubber Gasketed Joints: Immediately before jointing pipe, the bell end of the pipe shall be thoroughly cleaned, and a clean rubber gasket lubricated with an approved vegetable-based lubricant shall be placed in the bell groove. The spigot end of the pipe shall be carefully cleaned and lubricated with a vegetable-based lubricant. The spigot end of the pipe section shall then be inserted into the bell of the previously laid joint and telescoped into its proper position. Tilting of the pipe to insert the spigot into the bell will not be permitted.

3.03 INSTALLATION OF PIPE APPURTENANCES

A. Protection of Appurtenances: Where the joining pipe is tape-coated, buried appurtenances shall be coated with cold-applied tape in accordance with ANSI/AWWA C209, Type II. Where pipe is encased in polyethylene sleeves, buried appurtenances shall also be encased in polyethylene.

B. Installation of Valves: All valves shall be handled in a manner to prevent any injury or damage to any part of the valve. All joints shall be thoroughly cleaned and prepared prior to installation. Adjust all stem packing and operate each valve prior to installation to insure proper operation.

C. All valves shall be installed so that the valve stems are plumb and, in the location, shown.

END OF SECTION

SECTION 33 0524.13 – STEEL PIPE AND TUBING FOR AIR AND GAS SERVICE

PART 1 - GENERAL

1.01 THE REQUIREMENT

A. The CONTRACTOR shall provide steel pipe and appurtenances, complete and in place, in accordance with the Contract Documents.

B. The requirements of Section 22 1000 – Plumbing Piping shall apply to the WORK of this Section.

PART 2 - PRODUCTS

2.01 PIPE MATERIAL

A. **Water, Air, Fuel Gas, Oil, Steam, and Waste Service:** Unless otherwise indicated, galvanized and black steel pipe shall conform to ASTM A53 – Specification for Pipe, Steel Black and Hot-Dipped, Zinc-Coated, Welded and Seamless or ASTM A106 – Specification for Seamless Carbon Steel Pipe for High Temperature Service, Grade B, and shall be Schedule 10 or 40 as indicated in the Plans. Galvanized steel pipe shall not be cement mortar lined unless indicated otherwise in the Plans.

2.02 PIPE JOINTS

A. Black steel pipe for general service shall have screwed ends with NPT threads, welded joints, or flanged joints. Screwed joints shall be made up with Teflon tape and welded joints may have butt-weld fittings, socket-weld fittings, or flanges. Where indicated, black steel pipe shall have grooved ends for shouldered couplings or plain ends for sleeve-type couplings.

B. Black steel pipe for chlorine or sulfur dioxide pressure service shall be socket-welded except where required to match mating fittings of vacuum regulator check units, gas filters, valves, diaphragm units, gauges, and switches.

C. Galvanized steel pipe shall have screwed ends with NPT threads made up with Teflon tape. Where indicated, galvanized steel pipe shall have grooved ends for shouldered couplings or plain ends for sleeve-type couplings.

D. Where pressure conditions permit, black and galvanized steel pipe may have push-on joints for compression type fittings. For high-pressure service these joints shall be harnessed.

2.03 FITTINGS

A. **Common Use:** The following fittings shall be provided for galvanized or black steel pipe, as indicated in the Piping Schedule:

1. Threaded malleable iron fittings conforming to ANSI-ASME B16.3 – Malleable-Iron Threaded Fittings, Classes 150 and 300.
2. Threaded cast iron fittings conforming to ANSI/ASME B 16.4 - Cast Iron Threaded Fittings, Class 125 and 250.
3. Forged steel socket welded fittings conforming to ANSI/ASME B 16.11 - Forged Fittings, Socket - Welding and Threaded.
4. Butt welding fittings conforming to ANSI/ASME B 16.9 - Factory-Made Wrought Steel Butt Welding Fittings, Schedule 40 or 80, as indicated.
5. Threaded cast iron drainage fittings conforming to ANSI/ASME 16.12 - Cast Iron Threaded Drainage Fittings.

6. Flanged cast iron fittings conforming to ANSI/ASME B 16.1 - Cast Iron Pipe Flanges and Flanged Fittings, Class 25, 125, 250 and 800.
7. Flanged steel fittings conforming to ANSI/ASME B 16.5 - Pipe Flanges and Flanged Fittings, Steel Nickel Alloy and Other Special Alloys.
8. Grooved ductile iron fittings with grooving dimensions conforming to ANSI/AWWA C 606 - Joints, Grooved and Shouldered Type.
9. Compression-type steel fittings with armored Buna S gaskets for plain end pipe.

PART 3 - EXECUTION

3.01 INSTALLATION

A. **General:** All steel pipes shall be installed in a neat and workmanlike manner, properly aligned and cut from measurements taken at the site to avoid interferences with structural members, architectural features, openings, and equipment. Exposed pipes shall afford maximum headroom and access to equipment. Where necessary, all piping shall be installed with sufficient slopes for venting or drainage of liquids and condensate to low points.

B. **Supports and Anchors:** All piping shall be firmly supported with fabricated or commercial hangers or supports in accordance with Section 22 0529 – Hangers and Supports for Plumbing Piping and Equipment.

C. **Valves and Unions:** Water, steam, condensate gas, vacuum, and air supply piping to fixtures, groups of fixtures, and equipment shall be provided with a shutoff valve and union, unless the valve has flanged ends. Low points in water systems and driplegs in steam, gas and air systems shall have drainage valves. Unions shall be provided at threaded valves, equipment, and other devices requiring occasional removal or disconnection.

D. **Branch Connections:** Branch connections in horizontal runs of air and gas piping shall be made from the top of the pipe to avoid drainage of condensate into the equipment.

3.02 PIPE PREPARATION

A. Prior to installation, each pipe length shall be carefully inspected, be flushed clean of any debris or dust and be straightened if not true. Ends of threaded pipes shall be reamed and filed smooth. All pipe fittings shall be equally cleaned before assemblage.

3.03 PIPE JOINTS

A. **Threaded Joints:** Pipe threads shall conform to ANSI/ASME B1.20.1 – Pipe Threads, General Purpose (inch), and shall be full and cleanly cut with sharp dies. Not more than three threads shall remain exposed after installation.

B. **Welded Joints:** Welded joints shall conform to the specifications and recommendations of ANSI/ASME B 31.1 – Power Piping. All welding shall be done by skilled and qualified welders.

C. **Grooved Joints:** Grooves for grooved couplings and fittings shall be made with specially designed grooving tools to the Manufacturer’s recommendations and conform to ANSI/AWWA C606. All grooves shall be clean and sharp without flaws. The pipe ends shall be accurately cut at 90 degrees to the pipe axis.

D. **Push-On-Joints:** Push on joints and gasket installation shall be in accordance with the Manufacturer’s recommendations and lubricants. Pipe ends shall be beveled to

facilitate assembly. Lubricants shall be suitable for potable water service and shall be kept clean in closed containers.

3.04 INSPECTION AND FIELD TESTING

A. **Inspection:** All finished installations shall be carefully inspected for proper supports, anchoring, interferences, and damage to pipe, fittings, and coating. Any damage shall be repaired.

B. **Field Testing:** Prior to enclosure or burying, all piping systems shall be pressure tested as required for a period of not less than one hour, without exceeding the tolerances listed. Where no pressures are indicated, the pipes shall be subject to 1-1/2 times the maximum working pressure. All test equipment, labor, materials, and devices shall be furnished at the Contractor's expense.

1. Leakage may be determined by loss of pressure, soap solution, chemical indicator, or other positive and accurate methods. All fixtures, devices, or other accessories which are to be connected to the lines and which would be damaged if subjected to the test pressure shall be disconnected and ends of the branch lines plugged or capped as required during the testing procedures.

2. All leaks shall be repaired and the system shall be re-tested until no leaks are found.

END OF SECTION

SECTION 33 0531 – POLYVINYL CHLORIDE (PVC) PIPE

PART 1 – GENERAL

1.01 REQUIREMENT

A. Polyvinyl chloride pressure pipe for water distribution, in nominal diameters 4 inches through 60 inches.

B. Polyvinyl chloride sewer pipe for gravity sewers in nominal diameters 4 inches through 48 inches.

C. Polyvinyl chloride pressure pipe for sewers force mains in nominal diameters 4 inches through 60 inches.

D. Pipe 3 inch or smaller: Shall comply with these Specifications.

1.02 REFERENCES

A. **Commercial Standards:**

ANSI A 21.16 (AWWA C 116)	Protective Fusion Bonded Epoxy Coating for the Interior and Exterior Surfaces of Ductile Iron and Grey Iron Fittings for Water Supply Service.
ASTM D1248	Polyethylene Plastics Molding and Extrusion Materials.
ASTM D1784	Rigid Poly (Vinyl Chloride) (PVC) Compounds and Chlorinated Poly (Vinyl Chloride) (CPVC) Compounds.
ASTM D2241	Poly (Vinyl Chloride) (PVC) Pressure-Rated Pipe (SDR Series).
ASTM D2321	Underground Installation of Thermoplastic Pipe for Sewers and Other Gravity-Flow Applications.
ASTM D2444	Determination of the Impact Resistance of Thermoplastic Pipe and Fittings by Means of a Tup (Falling Weight).
ASTM D2680	Acrylonitrile-Butadiene-Styrene (ABS) and Poly (Vinyl Chloride) (PVC) Composite Sewer Piping.
ASTM D2774	Underground Installation of Thermoplastic Pressure Piping.
ASTM D3034	Type PSM Poly (Vinyl Chloride) (PVC) Sewer Pipe and Fittings.
ASTM D3139	Joints for Plastic Pressure Pipes Using Flexible Elastomeric Seals.
ASTM D3212	Joints for Drain and Sewer Plastic Pipes Using Flexible Elastomeric Seals.
ASTM F477	Elastomeric Seals (Gaskets) for Joining Plastic Pipe.
ASTM F679	Poly (Vinyl Chloride) (PVC) Large-Diameter Plastic Gravity Sewer Pipe and Fittings.
ASTM F794	Poly (Vinyl Chloride) (PVC) Profile Gravity Sewer Pipe and Fittings Based on Controlled Inside Diameter.
ASTM F949	Poly (Vinyl Chloride) (PVC) Corrugated Sewer Pipe with Smooth Interior and Fittings.
AWWA C110	American National Standard for Ductile-Iron and Gray-Iron Fittings, 3 Inches Through 48 Inches for Water.
AWWA C605	Underground Installation of PVC Pressure Pipe and Fittings for Water.
AWWA C651	Disinfecting Water Mains.
AWWA C111	Rubber-Gasket Joints for Ductile-Iron Pressure Pipe and Fittings.
AWWA C900-16	Polyvinyl Chloride (PVC) Pressure Pipe and Fabricated Fittings, 4 Inches Through 60 Inches.
AWWA C909	Molecularly-Oriented Polyvinyl Chloride (PVCO) Pressure Pipe, 4 Inches through 12 Inches (100mm through 300 mm), for Water Distribution.

PPI TR3	Developing Recommended Hydrostatic Design Stresses for Thermoplastic Pipe Materials.
UNI-B-13	Joint Restraint Devices for Use with Polyvinyl Chloride Pipe.

1.03 SUBMITTALS

A. Submittals shall be made in accordance with Section 01 3300 – Submittal Procedures.

B. Submit shop drawings showing design of new pipe and fittings indicating alignment and grade, laying dimensions, fabrication, fittings, flanges, and special details.

1.04 QUALITY CONTROL

A. Submit manufacturer's certifications that PVC pipe and fittings meet requirements of this Section and AWWA C900 and AWWA C909 for pressure pipe applications, or appropriate ASTM standard specified for gravity sewer pipe.

B. Submit manufacturer's certification that PVC pressure pipe for water lines and force mains has been hydrostatically tested at factory in accordance with AWWA C900, AWWA C909, and this Section.

C. When foreign manufactured material is proposed for use, have material tested for conformance to applicable ASTM requirements by certified independent testing laboratory located in United States. Certification from another source is not acceptable. Furnish copies of test reports to ENGINEER for review. Cost of testing paid by CONTRACTOR.

PART 2 – PRODUCTS

2.01 MATERIAL

A. Use PVC compounds in manufacture of pipe that contain no ingredient in amount that has been demonstrated to migrate into water in quantities considered to be toxic.

B. Furnish PVC pressure pipe manufactured from Class 12454-A or Class 12454-B virgin PVC compounds as defined in ASTM D1784. Use compounds pre-qualified for a 4,000 psi hydrostatic design basis, and a maximum hydrostatic design stress of 2,000 psi for water at 73°F per requirements of PPI TR3. Provide pipe which is homogeneous throughout, free of voids, cracks, inclusions, and other defects, uniform as commercially practical in color, density, and other physical properties. Deliver pipe with surfaces free from nicks and scratches with joining surfaces of spigots and joints free from gouges and imperfections which could cause leakage.

C. PVC Solvent Weld Schedule Pipe shall meet:
1. PVC Schedule 40 and 80: ASTM D1785/ D2665/ D2241
2. Cellular Core PVC Sch 40: ASTM F891
3. PVC Schedule 30: ASTM D2949
4. PVC Perforated Drain Pipe: ASTM D2729
5. ABS Sch 40: ASTM D2661
6. Cellular Core ABS Sch 40: ASTM F628

D. Standard PVC laying length shall be 14 or 20 ft +/- 1”. Solvent Weld Pipe shall be manufactured in standard laying length of 10 ft and 20 ft.

E. Do not use PVC for offset sections with depth of cover greater than 20 feet or less than 4 feet, unless acceptable by manufacturer. Do not use PVC in potentially petroleum-contaminated areas.

F. PVC in areas exposed to direct sunlight shall be protected with UV-inhibitor coating.

2.02 Pipe Class and Working Pressures:

A. Pipe Pressure Class shall be as noted per plan and shall meet the requirements in the

following Table 1.

Table 1 – Pipe Pressure Class

APPLICATION	ASTM or AWWA DESIGNATION	SDR (Max.)/ STIFFNESS (MIN.)	DIAMETER SIZE RANGE
PRESSURE/ GRAVITY	C900 C900 C900	DR 25/ Class 165 psi DR 18/ Class 235 psi DR 14/ Class 305 psi	4" to 60” 4" to 42 4” to 30”
GRAVITY	D3034 D3034	SDR 35/ 46 psi SDR 26/ 115 psi	4" to 15" 4" to 15"
GRAVITY	F679 F679	PS46/ 46 psi PS 115/ 115 psi	18” to 48” 18" to 48"
CORRUGATED GRAVITY	F949 F949	N/A / 46 psi N/A / 115 psi	4" to 48" 4" to 48"
CORRUGATED GRAVITY	F794 F794	N/A / 46 psi N/A / 115 psi	4" to 48" 8" to 15"

2.03 PRESSURE SERVICE PIPE

A. All potable water pipe shall bear National Sanitation Foundation Seal of Approval (NSF-PW) and meet the requirements of AWWA C900, ANSI/ NSF 61.

B. For PVC C900, pipeline curves and bend can be made by deflecting joints by no more than 1.5 deg. Do not exceed maximum deflection recommended by pipe and fitting manufacturer. Submit details of other methods of providing curves and bends for review by ENGINEER.

C. For PVC Solvent Weld Pipe (12” and smaller), pipeline curves can be made by bending the pipe within the limits of pipe curvature found in Table 2 below.

2.04 GRAVITY SEWER PIPE

A. When solid wall PVC pipe 18 inches to 27 inches in diameter is required in SDR 26, provide pipe conforming to ASTM F679, except provide wall thickness as required for SDR 26 and pipe strength of 115 psi.

B. No deflection at joint shall be allowed for pipe sizes 12” or smaller. Pipeline curves shall be accomplished through bending of the pipe within the limits of pipe curvature as shown in the following Table:

Table 2 – Pipe Bend Curvature

PIPE SIZE (IN)	MIN RADIUS (FT)	OFFSET/ 20 FT (IN)	OFFSET/ 14 FT (IN)
4	100	23.9	11.7
6	150	16	7.8
8	200	12	5.9
10	250	9.6	4.7
12	300	8	3.9

C. For pipes 15” – 36” maximum angular deflection at joint shall be 1.5 degrees or as approved by pipe manufacturer.

D. For sewers up to 12 inches in diameter crossing over water lines, or crossing under water lines with less than 2 feet separation, provide minimum 150 psi pressure-rated pipe conforming to ASTM D2241 with suitable PVC adapter couplings. Pipes shall be encased in concrete, unless noted otherwise.

2.05 GASKETS

A. For pressure pipe, integral gasket bell and spigot “push-on” joint shall conform to ASTM D3139.

B. For gravity pipe, locked-in gaskets joints shall meet ASTM D3212 for joint tightness (22” Hg vacuum and a 25-ft head pressure test)

C. Gaskets shall meet the requirements of ASTM F477.

D. Flat Face Mating Flange: Full faces 1/8-inch-thick ethylene propylene (EPR) rubber.

E. Raised Face Mating Flange: Flat ring 1/8-inch ethylene propylene (EDR) rubber, with filler gasket between OD of raised face and flange OD to protect flange from bolting moment.

F. Lubricant for rubber-gasketed joints: Water soluble, non-toxic, non-objectionable in taste and odor imparted to fluid, non-supporting of bacteria growth, having no deteriorating effect on PVC or rubber gaskets.

G. Manufacturer shall test sample from each batch conforming to requirements ASTM D2444.

2.06 JOINTS AND FITTINGS:

A. Flanged or bolted mechanical joint or push-on joint ductile or gray iron fittings shall conform to ANSI/AWWA C110/A21.10 or C153/A21.53 and ANSI/ AWWA C111/A21.11. All iron fittings shall be cement mortar lined and tar (seal) coated in accordance with ANSI/AWWA C104/A21.4

B. PVC pipe fittings shall be full-bodied, either injection molded or factory fabricated, and shall meet AWWA C907. Saddle-type tee or wye fittings are not acceptable, unless noted otherwise.

C. Fusible PVC pipe lengths shall be assembled in the field with butt-fused joints. The Contractor shall follow the pipe supplier’s written guidelines for this procedure.

D. Solvent Weld PVC pipes shall utilize solvent weld on bell end, plain end, and socket type fittings and shall meet ASTM D2564.

E. Provide approved restrained joint fittings as required and as shown on plans. Restraining devices shall meet or exceed the requirements of ASTM F1674 or UNI-Bell B-13 "Recommended Standard Performance Specification for Joint Restrainers for Use with PVC Pipe."

F. Exterior Protection: Provide polyethylene wrapping of ductile-iron fittings.

2.07 Hydrostatic Test: AWWA C900, AWWA C909, ANSI A21.10 (AWWA C110); at point of manufacture; submit manufacturer's written certification.

PART 3 – EXECUTION

3.01 PROTECTION

A. Store pipe under cover out of direct sunlight and protect from excessive heat or harmful chemicals in accordance with manufacturer's recommendations.

3.02 INSTALLATION

A. Install PVC pipe in accordance with these Specifications, ASTM D2321 for Sewer Pipe, and manufacturer's recommendations.

B. Install PVC water service pipe to clear utility lines and have minimum depth of cover 48” below major streets, unless otherwise required by Drawings.

C. Avoid imposing strains that will overstress or buckle pipe when lowering pipe into trench.

D. Hand shovel pipe bedding under pipe haunches and along sides of pipe barrel and compact to eliminate voids and ensure side support.

F. Allow PVC pipe to cool to ground temperature before backfilling when assembled out of trench to prevent pullout due to thermal contraction.

3.03 PVC RESTRAINED MECHANISM

A. Do not apply lubricant to spline or pipe or coupling spline grooves.

B. Do not use excessive force while inserting the spline through coupling.

C. Insert spline until it is fully seated around circumference of pipe.

D. Field Cutting of Pipe Ends:
   1. Perform by workers certified by manufacturer.
   2. Use a PVC pipe cutter and provide square ends.
   3. Use manufacturer approved power routing and grooving tool to field fabricate required pipe groove.

END OF SECTION

SECTION 33 0531.19 – FUSIBLE POLYVINYL CHLORIDE (FPVC) PIPE

PART 1 – GENERAL

1.01 REQUIREMENT

A. Fusible polyvinyl chloride sewer pipe for gravity sewers in nominal diameters 4 inches through 48 inches.

1.02 REFERENCES

A. **Commercial Standards:**

ANSI A 21.16 (AWWA C 116)	Protective Fusion Bonded Epoxy Coating for the Interior and Exterior Surfaces of Ductile Iron and Grey Iron Fittings for Water Supply Service.
ASTM C923	Resilient Connectors Between Reinforced Concrete Manhole Structures, Pipes and Laterals
ASTM D1248	Polyethylene Plastics Molding and Extrusion Materials.
ASTM D1784	Rigid Poly (Vinyl Chloride) (PVC) Compounds and Chlorinated Poly (Vinyl Chloride) (CPVC) Compounds.
ASTM D2241	Poly (Vinyl Chloride) (PVC) Pressure-Rated Pipe (SDR Series).
ASTM D2321	Underground Installation of Thermoplastic Pipe for Sewers and Other Gravity-Flow Applications.
ASTM D2444	Determination of the Impact Resistance of Thermoplastic Pipe and Fittings by Means of a Tup (Falling Weight).
ASTM D2680	Acrylonitrile-Butadiene-Styrene (ABS) and Poly (Vinyl Chloride) (PVC) Composite Sewer Piping.
ASTM D2774	Underground Installation of Thermoplastic Pressure Piping.
ASTM D3034	Type PSM Poly (Vinyl Chloride) (PVC) Sewer Pipe and Fittings.
ASTM D3139	Joints for Plastic Pressure Pipes Using Flexible Elastomeric Seals.
ASTM D3212	Joints for Drain and Sewer Plastic Pipes Using Flexible Elastomeric Seals.
ASTM F477	Elastomeric Seals (Gaskets) for Joining Plastic Pipe.
ASTM F679	Poly (Vinyl Chloride) (PVC) Large-Diameter Plastic Gravity Sewer Pipe and Fittings.
ASTM F794	Poly (Vinyl Chloride) (PVC) Profile Gravity Sewer Pipe and Fittings Based on Controlled Inside Diameter.
ASTM F949	Poly (Vinyl Chloride) (PVC) Corrugated Sewer Pipe with Smooth Interior and Fittings.
AWWA C110	American National Standard for Ductile-Iron and Gray-Iron Fittings, 3 Inches Through 48 Inches for Water.
AWWA C605	Underground Installation of PVC Pressure Pipe and Fittings for Water.
AWWA C651	Disinfecting Water Mains.
AWWA C111	Rubber-Gasket Joints for Ductile-Iron Pressure Pipe and Fittings.
AWWA C900-16	Polyvinyl Chloride (PVC) Pressure Pipe and Fabricated Fittings, 4 Inches Through 60 Inches.
AWWA C909	Molecularly-Oriented Polyvinyl Chloride (PVCO) Pressure Pipe, 4 Inches through 12 Inches (100mm through 300 mm), for Water Distribution.
PPI TR3	Developing Recommended Hydrostatic Design Stresses for Thermoplastic Pipe Materials.
UNI-B-13	Joint Restraint Devices for Use with Polyvinyl Chloride Pipe.

1.03 SUBMITTALS

A. Submittals shall be made in accordance with Section 01 3300 – Submittal Procedures.

B. Submit shop drawings showing design of new pipe and fittings indicating alignment and grade, laying dimensions, fabrication, fittings, flanges, and special details.

C. Post-Construction Submittals: The following is required from the contractor and/or fusion provider to Owner or pipe supplier upon request:
   1. Fusion machine make, model, and serial number;
   2. Fusion technician identification and qualification level;
   3. Fusion joint number;
   4. Fusion, heating, and drag pressure settings;
   5. Heat plate temperature;
   6. Fusion heating time and cool down time;
   7. Ambient temperature and weather conditions.

1.04 QUALITY CONTROL

A. Submit manufacturer's certifications that PVC pipe and fittings meet requirements of this Section and AWWA C900 and AWWA C909 for pressure pipe applications, or appropriate ASTM standard specified for gravity sewer pipe.

B. Submit manufacturer's certification that PVC pressure pipe for water lines and force mains has been hydrostatically tested at factory in accordance with AWWA C900, AWWA C909, and this Section.

C. When foreign manufactured material is proposed for use, have material tested for conformance to applicable ASTM requirements by certified independent testing laboratory located in United States. Certification from another source is not acceptable. Furnish copies of test reports to ENGINEER for review. Cost of testing paid by CONTRACTOR.

PART 2 – PRODUCTS

2.01 MATERIAL

A. Use PVC compounds in manufacture of pipe that contain no ingredient in amount that has been demonstrated to migrate into water in quantities considered to be toxic.

B. Furnish PVC pressure pipe manufactured from Class 12454-A or Class 12454-B virgin PVC compounds as defined in ASTM D1784. Use compounds pre-qualified for a 4,000 psi hydrostatic design basis, and a maximum hydrostatic design stress of 2,000 psi for water at 73°F per requirements of PPI TR3. Provide pipe which is homogeneous throughout, free of voids, cracks, inclusions, and other defects, uniform as commercially practical in color, density, and other physical properties. Deliver pipe with surfaces free from nicks and scratches with joining surfaces of spigots and joints free from gouges and imperfections which could cause leakage.

C. Fusible PVC pipes shall meet ASTM D2241/ D1785, CSA B137.3, AWWA C900, NFS 61 (potable water), and ASTM Cell Classification 12454.

D. PVC Solvent Weld Schedule Pipe shall meet:
   1. PVC Schedule 40 and 80: ASTM D1785/ D2665/ D2241
   2. Cellular Core PVC Sch 40: ASTM F891
   3. PVC Schedule 30: ASTM D2949
   4. PVC Perforated Drain Pipe: ASTM D2729
   5. ABS Sch 40: ASTM D2661
   6. Cellular Core ABS Sch 40: ASTM F628

E. Fusible PVC pipe shall be manufactured in a standard 40’ nominal length, or custom

lengths as specified in the plans. Solvent Weld Pipe shall be manufactured in standard laying length of 10 ft and 20 ft.

F. Do not use PVC for offset sections with depth of cover greater than 20 feet or less than 4 feet, unless acceptable by manufacturer. Do not use PVC in potentially petroleum-contaminated areas.

G. PVC in areas exposed to direct sunlight shall be protected with UV-inhibitor coating.

2.02 Pipe Class and Working Pressures:

A. Pipe Pressure Class shall be as noted per plan and shall meet the requirements in the following Table 1.

Table 1 – Pipe Pressure Class

APPLICATION	ASTM or AWWA DESIGNATION	SDR (Max.)/ STIFFNESS (MIN.)	DIAMETER SIZE RANGE
PRESSURE/ GRAVITY	C900 C900 C900	DR 25/ Class 165 psi DR 18/ Class 235 psi DR 14/ Class 305 psi	4" to 60” 4" to 42 4” to 30”
GRAVITY	D3034 D3034	SDR 35/ 46 psi SDR 26/ 115 psi	4" to 15" 4" to 15"
GRAVITY	F679 F679	PS46/ 46 psi PS 115/ 115 psi	18” to 48” 18" to 48"
CORRUGATED GRAVITY	F949 F949	N/A / 46 psi N/A / 115 psi	4" to 48" 4" to 48"
CORRUGATED GRAVITY	F794 F794	N/A / 46 psi N/A / 115 psi	4" to 48" 8" to 15"

2.03 PRESSURE SERVICE PIPE

A. All potable water pipe shall bear National Sanitation Foundation Seal of Approval (NSF-PW) and meet the requirements of AWWA C900, ANSI/ NSF 61.

B. For PVC C900, pipeline curves and bend can be made by deflecting joints by no more than 1.5 deg. Do not exceed maximum deflection recommended by pipe and fitting manufacturer. Submit details of other methods of providing curves and bends for review by ENGINEER.

C. For PVC Solvent Weld Pipe (12” and smaller), pipeline curves can be made by bending the pipe within the limits of pipe curvature found in Table 2 below.

2.04 GRAVITY SEWER PIPE

A. When solid wall PVC pipe 18 inches to 27 inches in diameter is required in SDR 26, provide pipe conforming to ASTM F679, except provide wall thickness as required for SDR 26 and pipe strength of 115 psi.

B. No deflection at joint shall be allowed for pipe sizes 12” or smaller. Pipeline curves shall be accomplished through bending of the pipe within the limits of pipe curvature as shown in the following Table:

Table 2 – Pipe Bend Curvature

PIPE SIZE (IN)	MIN RADIUS (FT)	OFFSET/ 20 FT (IN)	OFFSET/ 14 FT (IN)
4	100	23.9	11.7
6	150	16	7.8
8	200	12	5.9
10	250	9.6	4.7
12	300	8	3.9

C. For pipes 15” – 36” maximum angular deflection at joint shall be 1.5 degrees or as approved by pipe manufacturer.

D. For sewers up to 12 inches in diameter crossing over water lines, or crossing under water lines with less than 2 feet separation, provide minimum 150 psi pressure-rated pipe conforming to ASTM D2241 with suitable PVC adapter couplings. Pipes shall be encased in concrete, unless noted otherwise.

2.05 FUSIBLE PVC PIPE FOR GRAVITY SEWER

A. Fusible PVC pipe shall conform to AWWA C900, ASTM D2241 or ASTM D1785 for standard dimensionality, as applicable. Testing shall be in accordance with the referenced AWWA standard.

B. Fusible PVC pipe shall be extruded with plain ends. The ends shall be square to the pipe and free of any bevel or chamfer. There shall be no bell or spigot of any kind incorporated into the pipe.

C. Fusible PVC pipe shall be manufactured in a standard 40’ nominal length, or custom lengths as specified.

D. Fusible PVC pipe shall be green in color for wastewater use.

E. Fusible PVC pipe shall be connected to manholes and other structures to provide a leak-free, properly graded flow into or out of the manhole or structure. Connections to a new manhole or structure shall be as indicated in the construction documents.

1. A flexible, watertight gasket per ASTM C923 shall be cast integrally with riser section(s) for all precast manholes and structures.
2. Drop connections shall be required where shown on drawings.
3. Grout internal joint space with non-shrink grout.

F. Adhere to the following data regarding radius of curvature for fusible PVC pipe. The confirmation of proposed radius of each section has to be part of the required submittal prior to construction.

Pipe Diameter (in)	DIPS Series	
	Critical Bucking Pressure (lbs)	Minimum Allowable Bending (ft)
4	426	100
6	426	144
8	425	189
10	426	231
12	426	275

G. Unless otherwise specified, fusible PVC pipe lengths shall be assembled in the field with butt-fused joints. The Contractor shall follow the Manufacturer’s written guidelines.

H. Fusible PVC sweeps or bends shall have at least 2 feet of straight section on either end of the sweep or bend to allow for fusion of the sweep or bend to the pip. Unless otherwise specified, there shall be no gasketed connections utilized with a fusible PVC sweep.

I. Standard fusible PVC sweep or bend angles shall not be greater than 22.5 degrees and shall be used with fusible PVC pipe with nominal diameters 4-inch through 16-inch, unless otherwise specified.

2.06 FUSION JOINTS

A. Unless otherwise specified, fusible PVC pipe lengths shall be assembled in the field with butt-fused joints. The Contractor shall follow the pipe supplier’s written guidelines for this procedure. All fusion joints shall be completed as described in this specification.

PART 3 – EXECUTION

3.01 PROTECTION

A. Store pipe under cover out of direct sunlight and protect from excessive heat or harmful chemicals in accordance with manufacturer's recommendations.

3.02 INSTALLATION

A. Install PVC pipe in accordance with these Specifications, ASTM D2321 for Sewer Pipe, and manufacturer's recommendations.

B. Install PVC water service pipe to clear utility lines and have minimum depth of cover 48” below major streets, unless otherwise required by Drawings.

C. Avoid imposing strains that will overstress or buckle pipe when lowering pipe into trench.

D. Hand shovel pipe bedding under pipe haunches and along sides of pipe barrel and compact to eliminate voids and ensure side support.

F. Allow PVC pipe to cool to ground temperature before backfilling when assembled out of trench to prevent pullout due to thermal contraction.

3.03 PVC RESTRAINED MECHANISM

A. Do not apply lubricant to spline or pipe or coupling spline grooves.

B. Do not use excessive force while inserting the spline through coupling.

C. Insert spline until it is fully seated around circumference of pipe.

D. Field Cutting of Pipe Ends:
   1. Perform by workers certified by manufacturer.
   2. Use a PVC pipe cutter and provide square ends.
   3. Use manufacturer approved power routing and grooving tool to field fabricate required pipe groove.

3.04 FUSION PROCESS FOR FUSIBLE PVC

A. Fusible PVC pipe shall be handled in a safe manner before, during, and after the fusion process and in accordance with this specification and the pipe supplier’s guidelines.

B. Fusible PVC pipe shall be fused by qualified fusion technicians, as documented by the pipe supplier.

C. Only appropriately sized and outfitted fusion machines that have been approved by the pipe supplier shall be used for the fusion process. Fusion machines must incorporate the following elements:

1. Heat Plate – Heat plates shall be in good condition with no deep gouges or scratches. Plates shall be kept clean and free of any debris or contamination. Heater controls shall function properly; cord and plug shall be in good condition. The appropriately sized heat plate shall be capable of maintaining a uniform and consistent heat profile and temperature for the size of pipe being fused, per the pipe supplier's guidelines.
2. Carriage – Carriages shall travel smoothly with no binding at low pressure. Jaws shall be in good condition with proper and clean inserts for the pipe size being fused. Insert pins shall be installed with no interference to carriage travel.
3. General Machine – All fusion machines shall be inspected for obvious defects, missing parts, hydraulic leaks, or potential safety issues prior to fusion.
4. Data Logging Device – An approved, fully functional datalogging device, with the current version of the pipe supplier's software, shall be used. Datalogging device operations and maintenance manual shall be kept with the unit at all times. If fusing for extended periods of time, an independent 110V power source shall be available to extend battery life.
5. Other equipment specifically required for the fusion process shall include the following:
    a) Pipe rollers shall be used for pipe support to either side of the machine.
    b) An infrared (IR) pyrometer with an accuracy of 1% or better, shall be used to check pipe and heat plate temperatures.
    c) Fusion machine operations and maintenance manual shall be kept with the fusion machine at all times.
    d) Facing blades specifically designed for cutting fusible PVC pipe shall be used.
    e) For fusion in inclement weather and/or windy conditions, a weather protection canopy with sides that allows full machine motion of the heat plate, fusion assembly and carriage shall be provided per the pipe supplier's recommendations. When the pipe temperature is below 40ºF, the pipe supplier's cold weather operating procedures shall be followed.

D. Joint Recording: Each fusion joint shall be logged by an approved electronic monitoring device (Data logger) connected to the fusion machine hydraulic system. The fusion data logging report shall be generated by software developed specifically for the butt-fusion of fusible PVC pipe. The software shall register and/or record the parameter required by the pip supplier and these specifications. Required data not logged by the data logger shall be logged manually and included in the fusion technician's joint report.

3.05 LEAKAGE TESTING FOR NON-PRESSURE FUSIBLE PVC

A. Gravity sanitary sewer leakage testing may include appropriate water or low-pressure air testing and shall be in accordance with MAG Standard Detail 611 and ASTM F1417.

END OF SECTION

SECTION 33 0561 – CONCRETE MANHOLES

PART 1 - GENERAL

1.01 SUMMARY

A. Section Includes: Manholes for sanitary sewer system assemblies.

1.02 REFERENCES

A. Soils Report: This work shall conform to the requirements of the latest Geotechnical Evaluation.

B. American National Standards Institute (ANSI)

C. AASHTO: American Association of State Highway and Transportation Officials Standard Specification for Highway Bridges

D. American Society for Testing and Materials (ASTM):

A48	Gray Iron Castings
A193	Alloy Steel and Stainless Steel Bolting Materials for High-Temperature Service.
A615	Standard Specification for Deformed and Plain Billet-Steel Bars for Concrete Reinforcement
C14	Concrete Sewer, Storm Drain, and Culvert Pipe.
C387	Packaged, Dry, Combined Materials for Mortar and Concrete.
C478	Precast Reinforced Concrete Manhole Sections.

1.03 SUBMITTALS

A. Submittals shall be furnished in accordance with Section 01 3300 – Submittal Procedures.

B. Shop Drawings:
   1. Submit drawing of each manhole with plan and sections showing manhole dimensions and actual installation.
   2. Submit testing plan, documentation methods, and proposed schedule.

PART 2 - PRODUCTS

2.01 MANHOLES

A. Manhole Bases: The base of all manholes shall be either cast-in-place concrete or precast concrete, except for manholes housing air and vacuum release valve assemblies.
   1. Precast concrete bases shall have the base slab integral with the sidewalls. The base slab shall be 6 inches minimum thickness with No. 4 reinforcement steel bars at 8 inches on centers each way in the center of the slab. The base reinforcement steel shall be tied to the wall steel.
   2. Bases for manholes housing air and vacuum release valve assemblies shall consist of a drain gravel base and precast or cast-in-place concrete ring foundation.

B. Precast Manhole Sections: Precast manhole sections conforming to ASTM C478 shall be either 48-inch, 60-inch, 72-inch, or 84-inch internal diameter with 5-inch minimum walls or as otherwise shown for special purposes. The top and bottom of all sections shall be parallel.

C. Eccentric Sections: Eccentric cones shall be provided for all manholes except as otherwise shown on the Drawings. Cones shall have the same wall thickness and reinforcement as the precast manhole section.

D. Manhole Grade Rings:
   1. Manhole grade rings for extensions shall be a maximum 6 inches high. Extensions will be limited to 15 inches.

2. Finish grade for solid covers shall be ½-inch below flush in concrete or asphalt concrete paved areas, and 6 inches above finish grade in unpaved areas, except flush where gated covers are specified.
3. Grade rings shall have anchor bolt holes for bolt-down frames and covers.
4. Finish installation in accordance with MAG standard Detail 420-2

E. Factory Testing: Prior to delivery of precast manhole sections, yard tests shall be conducted at the point of manufacture. Precast sections to be tested shall be selected at random from stockpiled material to be supplied for the job. All test specimens shall be mat tested, and shall meet the permeability test requirements of ASTM C14.

F. Joints of Manhole Sections: Tongue-and-groove type sealed with either mortar or preformed plastic joint material.
1. Mortar: Standard premixed mortar conforming to ASTM C387 or proportion 1 part portland cement to 2 parts clean, well-graded sand which will pass a 1/8-inch screen. Admixtures may be used not exceeding the following percentages of weight of cement: Hydrated lime, 10 percent; diatomaceous earth or other inert materials, 5 percent. Consistency of mortar shall be such that it will readily adhere to the manhole section if using the standard tongue-and-groove type joint. Mortar mixed for longer than 30 minutes shall not be used.
2. Preformed Plastic Gaskets: Preformed plastic gaskets may be used in lieu of mortar type joints.
    a. Manufacturers:
        1) Kent-Seal No. 2, Hamilton Kent Manufacturing Company, Box 178, Kent, OH 44240;
        2) Ram-Nek, K. T. Snyder Company, Inc., Central National Bank Building, Houston, TX 77002;
        3) or ENGINEER-approved equal, meeting all requirements of Federal Specification SS-S-00210.

G. Pipe connections to manholes shall be as specified by the pipe manufacturer. Inlet and outlet pipes shall extend through the walls of the structures for a sufficient distance beyond the outside surface to allow for connections, but shall be cut off flush with the wall on the inside surface. For concrete structures, the mortar shall be placed around these pipes so as to form a tight, neat connection.

H. Manhole frames and covers shall be cast iron as detailed on the Drawings and elsewhere in these Specifications and Contract Documents.

1. Use castings for frames, grates, rings, and covers conforming to ASTM A48, Class 35B. Provide locking covers if indicated on Drawings.

2. Use clean castings capable of withstanding application of AASHTO M306 - 40,000-pound proof loading without detrimental permanent deformation.

3. Fabricate castings to conform to shapes, dimensions, and with wording or logos shown on Drawings. Standard dimensions for manhole covers are 32 inches in diameter.

4. Cast iron castings shall be tough, close-grained gray iron, sound, smooth, clean, free from blisters, blowholes, shrinkage, cold shuts, and all defects, and shall conform to ASTM A48, Class 30B. Plane or grind bearing surfaces to ensure flat, true surfaces.

5. Bolt-down covers shall be used on all electrical vaults and where indicated on Drawings.

6. Capscrews and washers shall be Type 316 stainless steel conforming to ASTM A193. Countersink bolt holes in cover so that the top of the capscrews are below the top plane of the cover. Frames for bolt-down covers shall be supplied with four ¾-inch-diameter Type 316 stainless steel anchor bolts, nuts, and washer as detailed on the Drawings.

7. Nominal inside opening of the frame shall be 24 inches, unless noted otherwise. Provide a blind pick hole or lifting lug in the cover. Do not provide lifting rings or vent holes in covers unless specifically required.

2.02 CLEANOUTS

A. Covers shall be true and seat within frame at all points.

B. Cleanout frames and covers shall be Pinkerton Foundry No. A-469 or D&L Supply No. H-8024, or ENGINEER-approved equal.

PART 3 - EXECUTION

3.01 INSTALLATION

A. Manholes:
   1. Concrete Base: Vibrate to densify poured in-place concrete and screed so that the first precast manhole section to be placed has a level, uniform bearing for the full circumference.
   2. Deposit sufficient mortar on base to assure watertight seal between base and manhole wall or place the first precast section of manhole in concrete base before concrete has set. First section shall be properly located and plumb.
   3. Carefully inspect precast manhole sections to be joined. Sections with chips or cracks in the tongue shall not be used. Clean ends of sections before assembly. Align manhole steps vertically.
   4. Joints with preformed plastic gaskets shall be installed in strict conformance with the manufacturer's recommendations. Only pipe primer furnished by the gasket manufacturer will be approved.
   5. For mortar joints, thoroughly wet joint with water prior to placing mortar. Place mortar on groove of lower section. Set next section in place. Fill joint completely with mortar of the proper consistency. Trowel interior and exterior surfaces smooth on standard tongue-and-groove joints. Prevent mortar from drying out, and cure by applying an approved curing compound or comparable approved method. Chip out and replace all cracked or defective mortar.

B. Construct manhole inverts with smooth transitions to ensure an unobstructed flow through manhole. Remove all sharp edges or rough sections which tend to obstruct flow. Do not lay pipe through manholes. Trowel all mortar surfaces smooth.

C. Install frames and covers. Frames shall be set in a bed of mortar with the mortar carried over the flange of the ring. Install bolt-down manholes as shown or as recommended by manufacturer. Provide a minimum of one 6-inch-high grade ring under the frame and cover. Extend anchor bolts through the grade ring to the frame. Hook the anchor bolt under the grade ring.

D. Manholes shall be tested as required by these Specifications and Contract Documents.

3.02 CLEANOUTS AND VAULTS

A. Construct in accordance with details as indicated on the Drawings.

3.03 CLEANING

A. Construction debris and other foreign matter shall be removed to the satisfaction of the ENGINEER.

B. Install cover drain pipe to minimum 12” x 12” x 12” drain rock approximately 10 feet from manhole on down slope.

C. Install top of manholes at 6 inches above finish grade or surface. Install surveyor markings to establish finish grade.

END OF SECTION

SECTION 33 3216 – PACKAGED WASTEWATER GRINDER PUMP ASSEMBLIES

PART 1 - GENERAL

1.01 GENERAL DESCRIPTION: The Contractor shall furnish complete factory-built and tested grinder pump unit(s), each consisting of a grinder pump core suitably mounted on an integral stand of stainless steel, special polyethylene tank, electrical quick disconnect (NEMA 6P), pump removal harness, discharge assembly/shut-off valve, anti-siphon valve/check valve assembly, electrical alarm assembly and all necessary internal wiring and controls. For ease of serviceability, all pump motor/grinder units shall be of like type and horsepower throughout the system.

1.02 SUBMITTALS:

A. Submittals shall be furnished in accordance with Sections 01 3300 – Submittal Procedures and applicable Sections of these Specifications and Contract Documents.

B. The MANUFACTURER shall supply four copies of Operation and Maintenance Manuals to the OWNER, and one copy of the same to the ENGINEER.

1.03 MANUFACTURER: Grinder pump stations, complete with all appurtenances, form an integral system, and as such, shall be supplied by one grinder pump station manufacturer. The CONTRACTOR shall be responsible for the satisfactory operation of the entire system. The equipment specified shall be a product of a company experienced in the design and manufacture of grinder pumps for specific use in low pressure sewage systems. The company shall submit detailed installation and user instructions for its product, submit evidence of an established service program including complete parts and service manuals, and be responsible for maintaining a continuing inventory of grinder pump replacement parts. The MANUFACTURER shall provide, upon request, a reference and contact list from ten of its largest contiguous grinder pump installations of the type of grinder pumps described within this specification.

The MANUFACTURER of the grinder pump station shall be Environment One Corporation, Sierra Peak, or ENGINEER approved equal.

Attention is directed to the fact that the drawings and overall system design are based on a particular piece of equipment from a particular manufacturer. These specifications are intended to provide guidelines for standard equipment of a recognized manufacturer who already meets all the requirements of this specification.

1.04 EXPERIENCE CLAUSE: The equipment furnished hereunder shall be the product of a company experienced in the design and manufacture of grinder pumps specifically designed for use in low pressure systems. All manufacturers proposing equipment for this project shall have at least 10 years of experience in the design and manufacture of units of identical size(s) and performance to the specified units. All manufacturers proposing equipment for this project must also have not less than 500 successful installations of low-pressure sewer systems utilizing grinder pumps of like type to the grinder pumps specified herein. An installation is defined as a minimum of 25 pumps discharging into a common force main which forms a low pressure sewer system. The contractor (supplier) proposing alternate equipment shall also submit, as part of the bid schedule, an installation list with contact person(s), phone number(s) and date(s) of at least 10 installations of the type of pump specified herein that have been in operation for at least 10 years.

In lieu of this experience clause, the contractor (supplier) of alternate equipment will be required to submit a 5-year performance bond for 100 percent of the stipulated cost of the equipment as bid and as shown in the Bid Schedule. This performance bond will be

used to guarantee the replacement of the equipment in the event that it fails within the bond period.

1.05 OPERATING CONDITIONS: The pumps shall be capable of delivering 31 GPM against a rated total dynamic head of 82 feet (35 PSIG). The pump(s) must also be capable of operating at negative total dynamic head without overloading the motor(s). Under no conditions shall in-line piping or valving be allowed to create a false apparent head.

1.06 WARRANTY: The grinder pump MANUFACTURER shall provide a part(s) and labor warranty on the complete station and accessories, including, but not limited to, the panel for a period of 36 months after receipt of shipment. Any manufacturing defects found during the warranty period will be reported to the MANUFACTURER by the OWNER and will be corrected by the MANUFACTURER at no cost to the OWNER.

1.07 WARRANTY PERFORMANCE CERTIFICATION: As a bid certification requirement, each bidder shall provide with their bid schedule a Warranty Performance Certification statement executed by the most senior executive officer of the grinder pump MANUFACTURER, which certifies a minimum of a 36-month warranty. They must further detail any exclusions from the warranty or additional cost items required to maintain the equipment in warrantable condition, including all associated labor and shipping fees, and certify that the MANUFACTURER will bear all costs to correct any original equipment deficiency for the effective period of the warranty. All preventive maintenance type requirements shall be included in this form as exclusions. These requirements include, but are not limited to, unjamming of grinder mechanism, periodic motor maintenance, and periodic cleaning of liquid level controls. Should the CONTRACTOR (supplier) elect to submit a performance bond in lieu of the experience clause outlined above, this Warranty Performance Certification shall also be used as a criterion to evaluate the CONTRACTOR'S (supplier's) performance over the warranty period. A Warranty Performance Certification form is included with the bid schedule and must be completed and submitted as part of the bid package. Bids with incomplete forms or missing forms will be considered nonresponsive.

PART 2 - PRODUCTS

2.01 TANK: The dimensions of the basin shall be based on the required site conditions as shown on the plans. The basin shall be provided with a minimum depth of 108". The basin shall be made from a fiberglass reinforced polyester resin. The resins used shall be a commercial grade polyester and shall be evaluated as a laminate by test or determined by previous service to be acceptable for the intended environment. The reinforcing material shall be a commercial grade of glass fiber having a coupling agent to provide a suitable bond between the glass reinforcement and the resin. The manufacturer may supply either (continuous strand, chopped-strand, continuous mat, and/or non-continuous mat) or (non-continuous glass strands having fiber lengths from 0.5 to 2.0 inches). The basin shall be water-tight.

The inner surface shall be smooth and free of cracks, exposed fibers, porosity, and crazing. The exterior surface shall be relatively smooth without exposed fibers or sharp projections. Wall thickness shall vary depending on basin height, to provide necessary strength to meet tensile and flexural physical property requirements. The tank wall and bottom must be designed to withstand 150 percent the pressure exerted by saturated soil loading at maximum burial depth. All station components must function normally when exposed to 150 percent of the maximum external soil and hydrostatic pressure.

The wet well FRP bottom laminate shall have less than 0.375 inches of center elastic deflection (deformation) when in service in totally submerged conditions. The finished FRP laminate will have a Barcol Hardness of at least 90% of the resin manufacturer's specified hardness for the fully cured resin. The Barcol Hardness shall be the same for

both interior and exterior surfaces. The wet well top flange shall have an outside diameter at least 4.0 inches greater than the inside diameter of the wet well. A six-hole pattern shall accommodate the mounting of a cover with at least 0.375 inches in diameter 300 series stainless steel fasteners. Non-corroding stainless steel threaded inserts shall be fully encapsulated with noncontinuous mat or chopped-strand glass fiber reinforcement. The inserts shall have an offset tab to prevent stripping or spinning out when removing and reinserting cover fasteners.

The steel anti-floatation flange shall be constructed from 0.1875 inches thick ASTM A36 structural steel plate, encapsulated in at least 0.125 inches of chopped-strand glass fiber reinforcement on all sides. The steel anti-floatation flange shall be square with outside dimensions of at least 4.0 inches greater than the wet well inside diameter. The steel anti-floatation flange shall be attached to the wet well bottom with chopped-strand glass fiber reinforcement. CONTRACTOR shall place the wet well on a concrete pad and fill with grout covering the entire steel anti- floatation flange. The amount of concrete shall be sufficient to prevent floatation of the wet well based on the site conditions. The steel anti-floatation flange shall not require bolt holes to secure it to the concrete pad.

A. Basin Cover: May be constructed of fiberglass, aluminum, or steel and may include an access hatch of single or double-leaf design.

The solid fiberglass cover shall be constructed with continuous mat or chopped-strand glass fiber reinforcement with a minimum thickness of 0.325 inches. The cover shall be green in color.

The aluminum cover shall be constructed of 0.250 inches thick mill finish in diamond plate pattern with 300 series stainless steel hardware. The access hatch shall have a recessed handle and locking pin. The hatch shall be held open in the vertical position by means of a hold open arm of corrosion resistant design.

The steel cover shall be constructed of 0.375 inches thick black enameled ASTM A36 structural steel plate. The access hatch shall have a recessed handle and locking pin. The hatch shall be held open in the vertical position by means of a positive locking arm of corrosion resistant design.

B. Electrical Connections: The fiberglass basin shall have polyethylene bulkhead fittings or a stainless steel fitting plate, terminating outside the tank wall with ¾” pipe thread. The fittings or plate shall be factory installed and sealed to guarantee watertight connection. There shall be (1) fitting for each pump supply cable and (1) fitting for the float cable.

C. Inlet Penetration: An EPDM grommet for use with 4” SCH40 or SDR35 pipe shall be included for field installation by CONTRACTOR. Hub shall have a six bolt pattern and include a hardware kit, consisting of stainless steel bolts, washers, nuts, and foam adhesive gasket. The pipe grommet or hub shall be the primary method of seal and shall not require any secondary sealing materials.

D. Vent Penetration: The tank shall be vented by means of a factory-provided, field-installed vent kit. A vent grommet for use with 2” DWV pipe shall be provided for field-installation into the tank wall. Vent line shall be terminated in 2” mushroom-style, non-corrosive ABS vent cap with activated carbon media for odor prevention

E. DISCHARGE: A stainless steel discharge wye fitting with two 1-1/4” NPT connections shall be factory installed in basin, to terminate on exterior tank wall. The discharge penetration shall be sealed and watertight. Inside the basin, one quick disconnect discharge fitting shall be provided per pump and fitting shall act as a gate valve, to prevent fluid backflow into basin when closed.

2.02 Grinder Pump: The pump shall have a non-overloading maximum capacity of over 31 GPM and a maximum total dynamic head of 82 feet. The pump shall also be capable of

operating at negative total dynamic head. The quantity of pumps installed shall be as shown in the plans.

A. Grinder Pump Construction: Pump shall be of the centrifugal-type with integral grinder mechanism and submersible type motor. The grinder shall be capable of macerating all material in normal domestic and commercial sewage, including reasonable amounts of foreign objects, to small particles which can freely pass through the pump and the 1-1/4" discharge piping. For easy serviceability, the pump shall be assembled as a single core unit, including motor, grinder, pump, valves, power cord, and quick disconnects for electrical and discharge.

   Castings and major components shall be of gray cast iron, ASTM A48, Class 35 with smooth surfaces without irregularities. All exposed hardware shall be 304 stainless steel. All metal surfaces in contact with pumped fluids, which are not stainless steel, shall be protected by a factory-applied multi-layer exterior coating.

   Sealing design shall incorporate metal-to-metal contact between machined surfaces. Where watertight sealing is required, surfaces shall be machined and fitted with O-rings, designed, and constructed to meet FM3615 for Class 1, Division 1, Groups C & D standards. Fittings will be the result of controlled compression of rubber O-rings in two planes and O-ring contact of four sides without the requirement of a specific torque limit. No secondary sealing compounds, elliptical O- rings, grease, or other devices shall be used.

B. Grinder Mechanism: Grinding mechanisms are available as either axial slicer or radial grinder. The axial slicer mechanism is comprised of (3) rotary slicer blades and a stationary slicer plate, both of 440C stainless steel material hardened to 58-60 Rockwell C. Slicer shall be bolted to shaft within close tolerance of slicer plate. The slicer plate shall be of engineered design with holes shaped for optimum cutting of debris. Grooved slots in plate shall eject debris away from underside of rotary cutter. The plate shall be fastened with countersunk head screws, flush with the surface of plate. Pumps with protruded or exposed head fasteners shall not be considered equal.

   Radial grinder mechanism consists of rotating impeller and stationary shredder ring, both of 440 stainless steel material hardened to 58-60 Rockwell C. Grinder assembly shall be mounted directly below volute passage. The impeller shall be threaded to a stainless steel shaft, locked with a stainless steel screw and washer. The shredder ring shall be secured with a retaining ring, bolted into cast-iron volute. Grinding of solids shall be from the action of the impeller against the shredder ring, where there shall be 24,000 cuts per second.

C. Stator/ Rotor: The rotor shall be a full lobe design of hardened and polished stainless steel. The stator shall be composed of a proprietary EPDM blend, designed, and tested specifically for improved use in domestic and commercial wastewater applications. Stator material shall have high resistance to water, detergent, grease, petroleum, abrasives, and temperature. Stator to be encapsulated by high density polyethylene nylon liner, to stabilize stator when in use and provide for longer stator life.

D. Motor: The pump motor construction shall be per NEMA MG-1 1.15 standard and shall be of the submersible type, rated 2 HP, 3450 RPM, 240 volt, 60 Hz, single phase operation. Motor shall be capacitor start, capacitor run type for high starting torque and both capacitors and start switch shall be housed internally to pump, below the cord entry. This compartment shall be dry and accessible by removing (4) bolts from cord cap for quick serviceability. Major motor operating temperature must not exceed Class B rating.

   The stator winding shall be of open type with Class F insulation. The stator shall be pressed into the cast iron motor housing. Winding housing shall be filled with clean, high

dielectric oil that lubricates bearings and seals, transferring heat from windings and rotor to the outer cast housing for improved heat dissipation. Air-filled housings or motors of any other construction type shall not be considered equal

Motor shall have automatic reset overload protection attached to the top end of the motor windings to stop motor if winding temperature reaches 130°C. The high temperature shut-off will cause the pump to cease operation in a run-dry event or in any condition that may cause pump to run outside of specified operating temperature range. All motors shall be manufactured domestically. Pump manufacturer shall test each motor prior to pump construction and shall provide, upon request, documentation to certify motor operation is within design parameters.

E. Mechanical Seal: Mechanical seal shall be type 21 and manufactured domestically. Standard pump shall have a single mechanical seal, though dual mechanical seals are an available option for increased motor protection. Seal material shall be silicon carbide with Viton® elastomers and the seal face shall be lapped to a flatness of one light band. Carbon ceramic seals shall not be considered equal.

F. Bearings: The motor shall have two heavy duty ball bearings and one sleeve bearing to support the pump shaft, taking radial and thrust loadings. Bearings shall be designed to an ABEC® system 1 or better. The upper bearing shall be a Conrad type, single-row, deep groove ball bearing designed to adequately handle the required radial loads. The lower bearing shall be a single row, deep groove ball bearing designed to adequately compensate for the axial loads and radial forces. Bearings shall be designed to deliver a minimum L-10 bearing life of 100,000 hours when operation is within the limitations of the manufacturer's performance curve. The bearings shall be lubricated in oil and will not require maintenance as described in ANSI/HI 1.4-2010 A.6.

G. Valves: The discharge piping of the pump shall include a factory-installed combination anti-siphon check valve and pressure relief valve in 316 stainless steel material. The anti-siphon check valve shall be rated for continuous operation to 235 psi. The pressure relief valve shall be factory-set to begin opening at 70 psi and shall be fully open at 100 psi.

H. Pump Discharge: Pump discharge shall be a 1-1/4" FPT connection. The discharge hose shall be constructed of a high pressure, oil resistant material and terminate in a 1-1/4" MPT fitting on pump side. On tank side, the discharge hose shall terminate in a quick connect fitting for ease of installation. Hose shall be rated to 150 psi.

I. Electrical and Power Cord: The power cord shall be 12 awg Type SOOW, UL listed cable. The cable jacket shall be sealed at the motor entrance by means of an approved rubber compression washer and compression nut. The cord cap is to be epoxy-filled to seal the outer cable jacket and leads, preventing fluid from entering motor housing. Cord shall withstand a pull strain to meet FM requirements. Power cord shall measure a minimum of 5 feet from cord cap and shall terminate in an electrical quick disconnect (EQD). A cord grip shall be used at the EQD to ensure a watertight seal to cable.

2.03 Electrical Components

A. Supply Cables: The pump supply cable(s) and float supply cable shall terminate in six pin EQDs, with water- resistant housings inside the basin. Housings shall include radial seals and shall require no tools for assembly/disassembly. A junction box shall not be considered equal for use inside the basin. Cables shall be a minimum of twenty-five feet for connection to the control panel.

B. Level Controls: Level control shall be through non-mercury, mechanical float switches with minimum (3) floats per basin. Floats shall be control duty rated, narrow angle, normally open type and shall be approved for use in sewage or wastewater

environments. Operating temperature range shall be between 32°F-170°F. Construction material shall be polypropylene with solid polyurethane foam interior. Individual power cords shall be 18 awg, type SJOOW cable constructed of chlorinated polyethylene material. Electrical rating shall be 5 amp (240V) / 10 amp (120V). Floats shall be mounted to float tree with (1) mounting collar per float and shall be capable of field adjustment. Float tree shall have a fixed, factory-installed mounting connection inside basin and shall be completely removable from basin for access to floats. Exterior or interior weights shall not be used. Floats shall terminate (1) 6-pin EQD for a single connection to float supply cable.

C. Control Panel: Each station shall include a NEMA 4X UL-listed panel suitable for vertical mounting. The panel enclosure shall be of fiber-reinforced plastic material for corrosion resistance and include a hinged, lockable cover.

The panel shall contain one 15-amp, double-pole circuit breaker for each pump's power circuit and one 15-amp single-pole circuit breaker for the alarm circuit. The following features shall also be included as a standard: H-O-A switch for each pump, external visual alarm light, external audible buzzer, silence button, redundant run, high level alarm capability, and SAM-capability. Pump operation in duplex stations shall be in alternating sequence. Each pump shall alternate roles as either Lead or Lag after each pump cycle. Lag pump operation shall be linked to the Alarm float terminal in the control panel, which will activate the Lag Pump in the event that the fluid level has risen to the Alarm level in the basin. Provided power is available to panel, the alarm shall be activated as follows:

1. Fluid in wet well rises to ALARM level and ALARM float switch contacts will close. The audible and visual alarms shall be activated.
2. The audible siren may be silenced by pressing the external silence button.
3. Visual alarm light will remain illuminated while ALARM float contacts are engaged.

(SAM) Remote Monitoring: The SAM hardware kit will consist of a cellular modem, power supply, wiring harness and relays and is designed for installation into an existing panel enclosure. The hardware kit shall be connected to dry contacts in the existing panel for alarm and pump data. A cellular modem will then communicate data to a web-based platform, including high level alarm, power loss, pump cycles, and run time information. Once information is transmitted to the system, it will be available for users to access through the website interface.

Users may be given a secure user ID and password by their local distributor or service center, upon request, to access the website. The website shall display "trouble" indicators for easy identification of sites experiencing an alarm condition. Users with multiple sites will have the ability to generate reports based on pump run cycle data or alarm conditions.

Local distributors and designated master users will have the ability to configure alerts for the various conditions, which can be sent via e-mail or SMS text to any number of recipients.

Available alert notifications shall include:

- High Level Alarm
- High Level Alarm Clear
- Power Loss
- Power Restored

Included in the cellular modem is a battery to allow one message to be communicated in the event of a power loss.

D. Generator Receptacle and Auto Transfer: The panel will include a 20 amp, 240V receptacle with gasketed cover for use with a portable generator and cable. Panel will be configured such that when power is present at the receptacle, the power source will be automatically switched to the generator. When power is no longer present at the receptacle, the power source will automatically switch back to main (AC) power.

E. Main Service Disconnect Breaker: A separate breaker shall be installed in the panel for use as a main service disconnect for the station.

2.04 Service and Installation

1) The pump core shall have two lifting eyes bolted to pump housing and the end of a lifting rope shall be securely attached to each eye for easy core removal. The pump shall include a stainless steel base stand, factory installed, to hold the pump upright in the station or as necessary during service. Quick disconnects shall be provided on the electrical power cord and the discharge hose.

2) All maintenance for the pump core, including installation and removal, must be possible without maintenance personnel entering the station. OSHA requirements may deem a grinder pump station installation to be a “permit-required confined space”, therefore pump must be accessible and serviceable from outside the station. The pump manufacturer may designate an authorized service center to provide technical expertise, stock equipment, train internal and/or third-party service technicians, provide field and/or shop repair service, and make judgements regarding warranty claims.

2.05 Factory Test

1) Each pump core shall be tested at the factory to ensure pump components, including valves, discharge assembly, and motor operate within the design parameters. Pump manufacturer shall provide certified test results upon request.

PART 3 - EXECUTION

3.01 FACTORY TEST: Each grinder pump shall be submerged and operated for 1.5 minutes (minimum). Included in this procedure will be the testing of all ancillary components such as, the anti-siphon valve, check valve, discharge assembly and each unit’s dedicated level controls and motor controls. All factory tests shall incorporate each of the above listed items. Actual appurtenances and controls which will be installed in the field shall be particular to the tested pump only. A common set of appurtenances and controls for all pumps is not acceptable. Certified test results shall be available upon request showing the operation of each grinder pump at two different points on its curve. Additional validation tests include: integral level control performance, continuity to ground and acoustic tests of the rotating components.

The ENGINEER reserves the right to inspect such testing procedures with representatives of the OWNER, at the GRINDER PUMP MANUFACTURER’S facility.

All basins shall be factory leak tested to assure the integrity of all joints, seams, and penetrations. All necessary penetrations such as inlets, discharge fittings and cable connectors shall be included in this test along with their respective sealing means (grommets, gaskets etc.).

3.02 CERTIFIED SERVICE PROGRAM: The grinder pump MANUFACTURER shall provide a program implemented by the MANUFACTURER’S personnel as described in this specification to certify the service company as an authorized serviced center. As evidence of this, the MANUFACTURER shall provide, when requested, sufficient evidence that they have maintained their own service department for a minimum of 30 years and currently employ a minimum of five employees specifically in the service department.

As part of this program, the MANUFACTURER shall evaluate the service technicians as well as the service organization annually. The service company will be authorized by the MANUFACTURER to make independent warranty judgments. The areas covered by the program shall include, as a minimum:

1. Pump Population Information: The service company will maintain a detailed database for the grinder pumps in the territory that tracks serial numbers by address.
2. Inventory Management: The service company must maintain an appropriate level of inventory (pumps, tanks, panels, service parts, etc.) including regular inventory review and proper inventory labeling. Service technicians will also maintain appropriate parts inventory and spare core(s) on service vehicles.
3. Service Personnel Certification: Service technicians will maintain their level-specific certification annually. The certifications are given in field troubleshooting, repair, and training.
4. Service Documentation and Records: Start up sheets, service call records, and customer feedback will be recorded and available by the service company.
5. Shop Organization: The service company will keep its service shop organized and pumps will be tagged with site information at all times. The shop will have all required equipment, a test tank, and cleaning tools necessary to service pumps properly.

3.03 DELIVERY: All grinder pump units will be delivered to the job site 100 percent completely assembled, including testing, ready for installation. Field installation of the pump in tanks under 96 inches is not allowed. Field installation of the level sensor into the tank is not allowed. Grinder pump stations will be individually mounted on wooden pallets.

3.04 INSTALLATION: Earth excavation and backfill are specified under SITE WORK, but are also to be done as a part of the work under this Section, including any necessary sheeting and bracing.

The CONTRACTOR shall be responsible for handling ground water to provide a firm, dry subgrade for the structure, and shall guard against flotation or other damage resulting from general water or flooding.

The grinder pump stations shall not be set into the excavation until the installation procedures and excavation have been approved by the ENGINEER.

Remove packing material. Users instructions MUST be given to the OWNER. Hardware supplied with the unit, if required, will be used at installation. The basin will be supplied with a standard 4" inlet grommet (4.50" OD) for connecting the incoming sewer line. Appropriate inlet piping must be used. The basin may not be dropped, rolled, or laid on its side for any reason.

Installation shall be accomplished so that 1" to 4" of accessway, below the bottom of the lid, extends above the finished grade line. The finished grade shall slope away from the unit. The diameter of the excavated hole must be large enough to allow for the concrete anchor.

A 6-inch (minimum) layer of naturally rounded aggregate, clean and free flowing, with particle size of not less than 1/8" or more than 3/4" shall be used as bedding material under each unit.

A concrete anti-flotation collar, as detailed on the drawings, and sized according to the manufacturer’s instructions, shall be required and shall be pre-cast to the grinder pump or poured in place. Each grinder pump station with its pre-cast anti-flotation collar shall have a minimum of three lifting eyes for loading and unloading purposes.

If the concrete is poured in place, the unit shall be leveled, and filled with water, to the bottom of the inlet, to help prevent the unit from shifting while the concrete is being poured. The concrete must be manually vibrated to ensure there are no voids. If it is necessary to pour the concrete to a level higher than the inlet piping, an 8" sleeve is required over the inlet prior to the concrete being poured.

The CONTRACTOR will provide and install a 4-foot piece of 4-inch SCH 40 PVC pipe with water tight cap, to stub-out the inlet for the property OWNER's installation contractor, as depicted on the contract drawings.

The electrical enclosure shall be furnished, installed, and wired to the grinder pump station by the CONTRACTOR. An alarm device is required on every installation, there shall be NO EXCEPTIONS. It will be the responsibility of the CONTRACTOR and the ENGINEER to coordinate with the individual property OWNER(s) to determine the optimum location for the Alarm Panel.

The CONTRACTOR shall mount the alarm device in a conspicuous location, as per national and local codes. The alarm panel will be connected to the grinder pump station by a length of 6-conductor type TC cable as shown on the contract drawings. The power and alarm circuits must be on separate power circuits. The grinder pump stations will be provided with 32', 25' of useable, electrical supply cable to connect the station to the alarm panel. This cable shall be supplied with a FACTORY INSTALLED EQD half to connect to the mating EQD half on the core.

3.05 BACKFILL REQUIREMENTS: Proper backfill is essential to the long-term reliability of any underground structure. Several methods of backfill are available to produce favorable results with different native soil conditions. The most highly recommended method of backfilling is to surround the unit to grade using Class I or Class II backfill material as defined in ASTM 2321. Class 1A and Class 1B are recommended where frost heave is a concern, Class 1B is a better choice when the native soil is sand or if a high, fluctuating water table is expected. Class 1, angular crushed stone offers an added benefit in that it doesn't need to be compacted.

Class II, naturally rounded stone, may require more compactive effort, or tamping, to achieve the proper density. If the native soil condition consists of clean compactible soil, with less than 12 percent fines, free of ice, rocks, roots, and organic material, it may be an acceptable backfill. Soil must be compacted in lifts not to exceed one foot to reach a final Proctor Density of between 85 percent and 90 percent. Heavy, non-compactible clays and silts are not suitable backfill for this or any underground structure such as inlet or discharge lines.

If you are unsure of the consistency of the native soil, it is recommended that a geotechnical evaluation of the material is obtained before specifying backfill.

Another option is the use of a flowable fill (i.e., low slump concrete). This is particularly attractive when installing grinder pump stations in augured holes where tight clearances make it difficult to assure proper backfilling and compaction with dry materials. Flowable fills should not be dropped more than 4 feet from the discharge to the bottom of the hole to avoid separation of the constituent materials.

Backfill of clean native earth, free of rocks, roots, and foreign objects shall be thoroughly compacted in lifts not exceeding 12" to a final Proctor Density of not less than 85 percent. Improper backfilling may result in damaged accessways. The grinder pump station shall be installed at a minimum depth from grade to the top of the 1 1/4" discharge line, to assure maximum frost protection. The finish grade line shall be 1" to 4" below the bottom of the lid, and final grade shall slope away from the grinder pump station.

All restoration will be the responsibility of the CONTRACTOR. Per unit costs for this item shall be included in the CONTRACTOR'S bid price for the individual grinder pump stations. The properties shall be restored to their original condition in all respects, including, but not limited to, curb and sidewalk replacement, landscaping, loaming and seeding, and restoration of the traveled ways, as directed by the ENGINEER.

3.06 START-UP AND FIELD TESTING: The MANUFACTURER shall provide the services of qualified factory trained technician(s) who shall inspect the placement and wiring of each station, perform field tests as specified herein, and instruct the OWNER's personnel in the operation and maintenance of the equipment before the stations are accepted by the OWNER.

All equipment and materials necessary to perform testing shall be the responsibility of the INSTALLING CONTRACTOR. This includes, as a minimum, a portable generator and power cable (if temporary power is required), water in each basin (filled to a depth sufficient to verify the high level alarm is operating), and opening of all valves in the system. These steps shall be completed prior to the qualified factory trained technician(s) arrival on site.

The services of a trained factory-authorized technician shall be provided at a rate of 40 hours for every 100 grinder pump stations supplied.

A. Upon completion of the installation, the authorized factory technician(s) will perform the following test on each station:
   1. Make certain the discharge shut-off valve in the station is fully open.
   2. Turn ON the alarm power circuit and verify the alarm is functioning properly.
   3. Turn ON the pump power circuit. Initiate the pump operation to verify automatic "on/off" controls are operative. The pump should immediately turn ON.
   4. Consult the Manufacturer's Service Manual for detailed start-up procedures.

Upon completion of the start-up and testing, the MANUFACTURER shall submit to the ENGINEER the start-up authorization form describing the results of the tests performed for each grinder pump station. Final acceptance of the system will not occur until authorization forms have been received for each pump station installed and any installation deficiencies corrected.

END OF SECTION

SECTION 40 0500.13 – COMMON WORK RESULTS FOR PROCESS PIPING

PART 1 - GENERAL

1.01 THE REQUIREMENT

A. Provide all piping systems indicated, complete and operable, in accordance with these Specifications and Contract Documents.

B. The mechanical drawings define the general layout, configuration, routing, method of support, pipe size and pipe type. The mechanical drawings are not pipe construction or fabrication drawings. Details for construction shall be developed as necessary to construct all mechanical piping systems, to accommodate the specific equipment provided, and to provide all spools, spacers, adapters, and connectors for a complete and functional system.

C. American Iron and Steel (AIS) requirement applies to this Section. All iron and steel products used in this project must be produced in the United States.

1.02 SUBMITTALS

A. Submittals shall be furnished in accordance with Section 01 3300 – Submittal Procedures.

B. Shop Drawings shall contain the following information:

1. Drawings: Layout drawings including all necessary dimensions, details, pipe joints, fittings, specials, bolts and nuts, gaskets, valves, appurtenances, anchors, guides, and material lists. Fabrication drawings shall indicate all spool pieces, spacers, adapters, connectors, fittings and supports to accommodate the equipment and valves in a complete and functional system.

C. Certifications: All necessary certificates, test reports, and affidavits of compliance shall be obtained.

PART 2 - PRODUCTS

2.01 GENERAL

A. Extent of Work: Pipes, fittings and appurtenances shall be provided in accordance with the requirements of these Specifications and as indicated.

B. Pipe Supports: Pipes shall be adequately supported, restrained, and anchored in accordance with these Specifications, and as indicated.

C. Lining: Application, thickness and curing of pipe lining shall be in accordance with these Specifications, unless otherwise indicated.

D. Coating: Application, thickness and curing of pipe coating shall be in accordance with these Specifications, unless otherwise indicated. Pipes above ground or in structures shall be field-coated in accordance these Specifications.

E. Pressure Rating: Piping systems shall be designed for the maximum expected pressure as defined in accordance with these Specifications, or as indicated on the Piping Schedule.

F. Inspection: Pipe shall be subject to inspection at the place of manufacture. During the manufacture of the pipe, the ENGINEER shall be given access to all areas where manufacturing is in progress and shall be permitted to make all inspections necessary to confirm compliance with requirements.

G. Tests: Except where otherwise indicated, materials used in the manufacture of the pipe shall be tested in accordance with the applicable specifications and standards. Welds shall be tested as indicated.

H. Welding Requirements: Welding procedures used to fabricate pipe shall be prequalified under the provisions of ANSI/AWS D1.1 - Structural Welding Code. Welding procedures shall be reviewed for longitudinal and girth or spiral welds for pipe cylinders, spigot, and bell ring attachments, reinforcing plates and ring flange welds, and plates for lug connections.

I. Welder Qualifications: Welding shall be done by skilled welders and welding operators who have had adequate experience in the methods and materials to be used. Welders shall be qualified under the provisions of ANSI/AWS D1.1 by an independent local, approved testing agency not more than 6 months prior to commencing work on the pipeline. Machines and electrodes similar to those used in the WORK shall be used in qualification tests. Qualification testing of welders and materials used during testing are part of the WORK.

2.02 PIPE FLANGES

A. General: Flanges shall have flat faces and shall be attached with bolt holes straddling the vertical axis of the pipe unless otherwise indicated. Attachment of the flanges to the pipe shall conform to the applicable requirements of ANSI/AWWA C207. Flange faces shall be perpendicular to the axis of the adjoining pipe. Flanges for miscellaneous small pipes shall be in accordance with the standards indicated for these pipes.

B. Pressure Ratings:
   1. 150 psi or less: Flanges shall conform to either ANSI/AWWA C207 - Steel Pipe Flanges for Waterworks Service--Sizes 4-inch. Through 144-inch, Class D, or ANSI/ASME B16.5 - Pipe Flanges and Flanged Fittings, 150-lb class.
   2. 150 psi to 275 psi: Flanges shall conform to either ANSI/AWWA C207 Class E or Class F, or ANSI/ASME B16.5 150-lb class.
   3. 275 psi to 700 psi: Flanges shall conform to ANSI/ASME B16.5, 300-lb class.
   4. Selection based on test pressure: AWWA flanges shall not be exposed to test pressures greater than 125 percent of rated capacity. For higher test pressures, the next higher rated AWWA flange or an ANSI-rated flange shall be selected.

C. Blind Flanges: Blind flanges shall be in accordance with ANSI/AWWA C207, or as indicated for miscellaneous small pipes.

D. Flange Coating: Machined faces of metal blind flanges and pipe flanges shall be coated with a temporary rust-inhibitive coating to protect the metal until the installation is completed.

E. Flange Bolts: Bolts and nuts shall conform to these Specifications. Bolts and nuts shall be installed with anti-seize per Loctite, or ENGINEER-approved equal (or thread locker to be confirmed with WWTP Operations). Studs and bolts shall extend through the nuts a minimum of ¼-inch. All-thread studs shall be used on all valve flange connections, where space restrictions preclude the use of regular bolts.

F. Insulating Flanges: Insulated flanges shall have bolt holes ¼-inch diameter greater than the bolt diameter.

G. Insulating Flange Sets: Insulating flange sets shall be provided where indicated or as needed. Each insulating flange set shall consist of an insulating gasket, insulating sleeves and washers and a steel washer. Insulating sleeves and washers shall be one piece when flange bolt diameter is 1½-inch or smaller and shall be made of acetal resin. For bolt diameters larger than 1½-inch, insulating sleeves and washers shall be 2-piece and shall be made of polyethylene or phenolic material. Steel washers shall be in accordance with ASTM A325 - Structural Bolts, Steel, Heat Treated, 120/105 ksi Minimum Tensile Strength. Insulating gaskets shall be full-face.

H. Flange Gaskets:
   1. Gaskets for flanged joints used in general water and wastewater service shall be full-faced type, with material and thickness in accordance with ANSI/AWWA C207. Blind flanges shall have gaskets covering the entire inside face of the blind flange and shall be cemented to the blind flange. Ring gaskets shall not be permitted, unless otherwise indicated.
   2. Gaskets for flanged joints used in chemicals, air, solvents, hydrocarbons, steam, chlorine, and other fluids shall be made of materials compatible with the service, pressure, and temperature.

2.03 THREADED INSULATING CONNECTIONS

A. General: Threaded insulating bushings, unions, or couplings, as appropriate, shall be used for joining threaded pipes of dissimilar metals and for piping systems where corrosion control and cathodic protection are involved.

B. Materials: Threaded insulating connections shall be of nylon, Teflon, polycarbonate, polyethylene, or other non-conductive materials, and shall have ratings and properties to suit the service and loading conditions.

2.04 MECHANICAL-TYPE COUPLINGS (GROOVED OR BANDED PIPE)

A. General: Cast mechanical-type couplings shall be provided where indicated. The couplings shall conform to the requirements of ANSI/AWWA C606 - Grooved and Shouldered Joints. Bolts and nuts shall conform to the requirements of these Specifications. Gaskets for mechanical-type couplings shall be compatible with the piping service and fluid utilized, in accordance with the coupling manufacturer's recommendations. The wall thickness of grooved piping shall conform with the coupling manufacturer's recommendations to suit the highest expected pressure. To avoid stress on equipment, equipment connections with mechanical-type couplings shall have rigid-grooved couplings or flexible type coupling with harness in sizes where rigid couplings are not available, unless thrust restraint is provided by other means. Mechanical-type couplings shall be bonded. The Subcontractor shall have the coupling manufacturer's service representative verify the correct choice and application of couplings and gaskets, and the workmanship, to assure a correct installation. To assure uniform and compatible piping components, all grooved fittings, couplings, and valves shall be from the same manufacturer.

2.05 SLEEVE-TYPE COUPLINGS

A. Construction: Sleeve-type couplings shall be provided where indicated, in accordance with ANSI/AWWA C219 - Standard for Bolted Sleeve-Type Couplings for Plain-End Pipe. Couplings shall be steel with steel bolts, without pipe stop. Couplings shall be of sizes to fit the pipe and fittings indicated. The middle ring shall be not less than ¼-inch thick or at least the same wall thickness as the pipe to which the coupling is connected. If the strength of the middle ring material is less than the strength of the pipe material, the thickness of the middle ring shall be increased to have the same strength as the pipe. The coupling shall be either 5 or 7 inches long for sizes up to and including 30 inches and 10 inches long for sizes greater than 30 inches, for standard steel couplings, and 16 inches long for long-sleeve couplings. The followers shall be single-piece contoured mill sections welded and cold-expanded as required for the middle rings, and of sufficient strength to accommodate the number of bolts necessary to obtain adequate gasket pressures without excessive rolling. The shape of the follower shall be of such design as to provide positive confinement of the gasket. Bolts and nuts shall conform to the requirements of these Specifications. Buried sleeve-type couplings shall be epoxy-coated at the factory as indicated.

B. Pipe Preparation: Where indicated, the ends of the pipe shall be prepared for flexible steel couplings. Plain ends for use with couplings shall be smooth and round for a distance of 12 inches from the ends of the pipe, with outside diameter not more than 1/64-inch smaller than the nominal outside diameter of the pipe. The middle ring shall be tested by cold-expanding a minimum of one percent beyond the yield point, to proof-test the weld to the strength of the parent metal. The weld of the middle ring shall be subjected to air test for porosity.

C. Gaskets:
   1. Gaskets for sleeve-type couplings shall be rubber-compound material that will not deteriorate from age or exposure to air under normal storage or use conditions. Gaskets for wastewater and sewerage applications shall be Buna "N," Grade 60, or ENGINEER-approved equivalent suitable elastomer. The rubber in the gasket shall meet the following specifications:
      a. Color: Jet Black
      b. Surface: Non-blooming
      c. Durometer Hardness: 74 plus and minus 5
      d. Tensile Strength: 1000 psi Minimum
      e. Elongation: 175 percent Minimum
   2. The gaskets shall be immune to attack by impurities normally found in water or wastewater. All gaskets shall meet the requirements of ASTM D2000 - Classification System for Rubber Products in Automotive Applications, AA709Z, meeting Suffix B13 Grade 3, except as noted above. Where sleeve couplings are used in water containing chloramine or other fluids, which attack rubber materials, gasket material shall be compatible with the piping service and fluid utilized.

D. Insulating Couplings: Where insulating couplings are required, both ends of the coupling shall have a wedge-shaped gasket which assembles over a rubber sleeve of an insulating compound in order to obtain insulation of all coupling metal parts from the pipe.

E. Restrained Joints: Sleeve-type couplings on pressure lines shall be harnessed unless thrust restraint is provided by other means. Harnesses shall be designed by the pipe manufacturer in accordance with AWWA Manual M11, or as indicated. Harness sets shall be designed for the maximum test pressure of the pipe in which they are installed. Where harness sets are installed near the suction and discharge of the pump, harness bolts shall have zero elongation to prevent misalignment of the pump imparted by the thrust within the piping system.

2.06 DISMANTLING JOINTS

A. General: Dismantling joints shall be provided where indicated, and provide up to 5” of longitudinal adjustment and up to 2 degrees of misalignment in flanged piping systems. The flange spool shall meet the requirements of AWWA Class D Ring Flange, compatible with ANSI Class 125 and 150 bolt circles. The end and body ring shall meet the requirements of ASTM A536 ductile iron meeting or exceeding Grade 65-45-12 for 3” to 12” sizes and ASTM A36 Carbon Steel with AWWA C207 Class D flanges for 14” to 72” sizes. Dismantling joints shall be provided with gaskets compounded for water and sewer service in accordance with ASTM D2000. Dismantling joints shall have a fusion bonded epoxy coating. Bolts and nuts (including tie-rods) shall conform to these Specifications. Dismantling joints shall be per Romac Industries, or ENGINEER-approved equal.

2.07 EXPANSION JOINTS

A. Piping subject to expansion and contraction shall be provided with sufficient means to compensate for such movement without exertion of undue forces to equipment or structures. This may be accomplished with expansion loops, bellow-type expansion joints or sliding-type expansion joints. Expansion joints shall be of stainless steel, monel, rubber, or other materials best suited for each individual service.

2.08 PIPE THREADS

A. Pipe threads shall be in accordance with ANSI/ASME B1.20.1 - Pipe Threads, General Purpose (inch), and be made up with Teflon tape or chemical sealant unless otherwise indicated.

2.09 PIPE INSULATION

A. Pipe thermal insulation for exterior freeze protection shall be self-sealing, flexible, tubular polyolefin/ polyethylene foam insulation. The insulation shall have a low thermal conductivity (not to exceed 0.04 W/mK) and shall have a service temperature range between -330°F and 120°F. Minimum thickness shall be 1 inch. Insulation shall be acceptable for use with heat tracing/ heat tape.

B. Where called out in the Contract Documents, heat tape shall be provided for freeze protection. Heat tape shall be wrap-type cable with built-in thermostat for automatic heat control and energy efficiency. It shall be used in conjunction with foam insulation. The low wattage design shall utilize a 120-volt power with outlet plug. Heat tape shall be manufactured by Wrap-On Co., Inc., or ENGINEER-approved equal.

C. Where called out in the Contract Documents, Pipe insulation for personnel protection against high temperature shall be provided. Protective insulation shall be fiber glass bonded with a thermosetting resin with a jacket designed to protect personnel again accidental contact with hot pipes. The insulation shall be designed to be used on systems operating up to 1000°F. Minimum thickness shall be 1 inch.

2.10 GENERAL

A. Pipes, fittings, and appurtenances shall be installed in accordance with these Specifications.

B. Lined Piping Systems: The lining manufacturer shall take full responsibility for the complete, final product and its application. Pipe ends and joints of lined pipes at screwed flanges shall be epoxy-coated to assure continuous protection.

C. Core Drilling: Where core drilling is required for pipes passing through existing concrete, core drilling locations shall be determined by radiograph of concrete construction to avoid damage to embedded raceways and reinforcing bars.

D. Cleanup: After completion of the WORK, cuttings, joining and wrapping materials, and other scattered debris shall be removed from the Site. The entire piping system shall be handed over in a clean and functional condition.

PART 3 - EXECUTION

3.01 INSTALLATION OF PIPE

A. Piping shall be installed in accordance with manufacturers' recommendation and these Specifications.

END OF SECTION

SECTION 40 0513.53 – DUCTILE, MALLEABLE, AND CAST-IRON ALLOYS PROCESS PIPING

PART 1 – GENERAL

1.01 DESCRIPTION

A. Furnish and install all ductile iron pipe and fittings in accordance with this section.

1.02 REFERENCES

A. Standards of the following agencies are referenced herein: American National Standards Institute (ANSI), American Society for Testing and Materials (ASTM), American Water Works Association (AWWA), Ductile Iron Pipe Research Association (DIPRA).

B. Referenced standards shall be the latest revision.

C. In case of conflict with referenced standards, the provisions of this section shall prevail.

1.03 SUBMITTALS

A. In accordance with Section 01 3300 – Submittal Procedures.

B. Catalog data sheets naming each product to be used identified by manufacturer and type number and additional documentation as required to demonstrate full compliance with this specification.

PART 2 – MATERIALS

2.01 DUCTILE IRON PIPE

A. Pipe shall conform to the following standards as applicable:
   1. AWWA C104: Cement-Mortar Lining for Ductile-Iron Pipe and Fittings for Water.
   2. AWWA C111: Rubber-Gasket Joints for Ductile-Iron Pressure Pipe and Fittings
   3. AWWA C115: Flanges Ductile-Iron Pipe with Threaded Flanges
   4. AWWA C150: Thickness Design of Ductile-Iron Pipe
   5. AWWA C151: Ductile-Iron Pipe, Centrifugally Cast, for Water of Other Liquids
   6. AWWA C606: Grooved and Shouldered Joints

B. Pipe wall thickness for push-on joint and mechanical joint pipe shall be Pressure Class 350 psi minimum, or as indicated in the Contract Documents.

C. Unless otherwise noted or required, all pipe shall have a cement mortar lining with asphaltic seal coat.

2.02 FITTINGS AND SPECIALS

A. Fittings and specials shall be ductile iron and shall conform to the following standards as applicable:
   1. AWWA C104: Cement-Mortar Lining for Ductile-Iron Pipe and Fittings for Water.
   2. AWWA C110: Ductile-Iron and Gray Iron Fittings, 3 inches through 48 inches, for Water and Other Liquids.
   3. AWWA C111: Rubber-Gasket Joints for Ductile-Iron Pressure Pipe and Fittings.
   4. AWWA C153: Ductile-Iron Compact Fittings, 3 inches through 24 inches and 54 inches through 64 inches for Water Service.
   5. AWWA C606: Grooved and Shouldered Joints.

B. Unless otherwise noted or required, either standard or compact fittings may be used.

C. Unless otherwise noted, all fittings shall have a cement mortar lining with asphaltic seal coat.

D. Grooved and flanged fittings shall have center to end dimensions in accordance with AWWA C111, wall thickness in accordance with AWWA C153, and shall be Class 350 minimum, or as indicated in the Contract Documents.

2.03 GROOVED JOINT COUPLINGS

A. In accordance with ASSA C606, except as modified herein.

B. Coupling body shall be ductile iron, ASTM A536

C. All bolts and nuts shall be 316 stainless steel conforming to ASTM A193, Grade B8M, for bolts and ASTM A194, Grade 8M, for nuts.

2.04 TYPE OF JOINTS

A. Buried joints shall be push-on, mechanical joint, or flexible grooved joint unless otherwise shown or required for installation.

B. Exposed joints shall be flanged or rigid grooved unless otherwise shown or required for the installation.

2.05 RESTRAINED PUSH-ON JOINTS

A. Where specified, called for on the drawings, or otherwise required for thrust restraint, push-on joints shall be Flex-Ring as manufactured by American Ductile Iron Pipe, TR Flex as manufactured by US Pipe, or ENGINEER-approved equal. Restrained joint shall provide for joint deflection after assembly.

2.06 RESTRAINED MECHANICAL JOINTS

A. Where specified, called for on the drawings or otherwise required for thrust restraint, mechanical joints shall be made using retainer glands with set screws or clamping lugs. Retainer glands shall be as manufactured by EBAA Iron; Tyler Pipe, or ENGINEER-approved equal.

2.07 FLANGE GASKETS

A. Full face or ring, except that ring gaskets shall be used for sizes 14-inch and greater. Gaskets shall be 1/8-inch thick synthetic rubber for test pressures up to 250 psi. For test pressures greater than 250 psi, provide suitable gasket as recommended by manufacturer.

2.08 FASTENERS EXCEPT GROOVED COUPLINGS

A. 316 stainless steel conforming to ASTM A193, Grade B8M, for bolts and ASTM A194, Grade 8M, for nuts. Bolts and nuts shall be installed with anti-seize per Loctite, or ENGINEER-approved equal (or thread locker to be confirmed with Fire Camp Operations).

B. Washers, where required, shall be of the same material as the nuts.

2.09 POLYETHYLENE ENCASEMENT

A. Buried pipe and fittings shall be protected by polyethylene encasement in accordance with AWWA C105.

2.10 GLASS LINING

A. Where specified or called for on the drawings, ductile iron pipe shall be glass-lined.

B. Glass lining shall consist of vitreous and inorganic material applied to the internal surfaces of pipe and fittings that have been prepared by blasting. The items shall be exposed to an appropriate maturing temperature (above 1400°F), at which point the vitreous and inorganic material fuses to the base metal, forming an integral molecular bond with the base metal. Subsequent coatings will be processed in a similar manner, forcing an integral

molecular bond with the base coast. The entire coating shall be a minimum of 10 mils thick.

C. Lining shall have a hardness of 5 to 6 on the Mohs scale and a density of 2.5-3.0 g/cm³ measured by ASTM D792. The glass lining shall be capable of withstanding a thermal shock of 350°F without crazing, blistering, or spalling. It shall be resistant to corrosion between pH-3 and pH-10 at 125°F.

D. There shall be no visible loss of surface gloss on the lining after immersing a production run sample in an 8% sulfuric acid solution at 125° F for 15 minutes. When tested according to ASTM C283, it shall show a weight loss of not more than 3 mg/in².

E. Provide continuous coverage as tested by a low voltage wet sponge holiday detectors. Only isolated voids due to casting anomalies and representing less than 0.1% of the total glassed surface shall be permitted.

F. Glass lining shall be Ferrock MEH-32 as provided by Fast Fabricators/Water Works Manufacturing, Vitco, or ENGINEER-approved equal.

2.11 DIRECT TAP

A. Ductile iron pipe shall have a minimum wall thickness allowed by ANSI/AWWA C151/A21.51.

B. The maximum direct tap sizes for 3- through 24-inch ductile iron pipe shall be per the following table:

Sizes (in.)	Pressure Class				
	150	200	250	300	350
	Maximum Direct Tap Size (in.)				
3	-	-	-	-	¾
4	-	-	-	-	¾
6	-	-	-	-	1
8	-	-	-	-	1
10	-	-	-	-	1
12	-	-	-	-	1-1/4
14	-	-	1-1/4	1-1/2	1-1/2
16	-	-	1-1/2	2	2
18	-	-	2	2	2
20	-	-	2	2	2
24	-	2	2	2	2

C. All classes of ductile iron pipe 24 inches or larger in diameter can be direct tapped for 2-inch corporation stop.

PART 3 – EXECUTION

3.01 INSTALLATION

A. Install in accordance with the drawings, applicable sections of these specification, applicable section of previously referenced AWWA standards, AWWA C600, and manufacturer's recommendations. In case of conflict, the drawings and specifications shall govern.

END OF SECTION

SECTION 40 0561.53 – WEIR GATES

PART 1 – GENERAL

1.01 THE REQUIREMENT

A. The CONTRACTOR shall provide Weir Gate and appurtenances, complete and operable, in accordance with the Contract Documents.

1.02 SUBMITTALS

A. Furnish submittals in accordance with Section 01 3300 – Submittal Procedures

1.03 REFERENCES

A. Except as modified or supplemented herein, all gates and operators shall conform to the applicable requirements of AWWA C513, latest edition.

PART 2 – PRODUCTS

2.01 GENERAL

A. Gates supplied under this section shall be manufactured by H. Fontaine Ltd., Rodney Hunt or ENGINEER-approved equal.

B. LIFTING MECHANISM

1. Exposed gate valves shall be rising stem, outside screw and yoke (OS&Y) type. The valves shall be handwheel operated with counter-clockwise opening stems. Dual stem arrangements shall be used as indicated and for wide weirs. Manual operators of the types listed in the Contract Documents shall be provided by the gate manufacturer.
2. All bearings and gears shall be totally enclosed in a weather tight housing. The pinion shaft of crank-operated mechanisms shall be constructed of stainless steel and supported by roller or needle bearings.
3. Each manual operator shall be designed to operate the gate under the maximum specified seating and unseating heads by using a maximum effort of 40 lbs (178 N) on the crank or handwheel and shall be able to withstand, without damage, an effort of 80 lbs (356 N).
4. The crank shall be removable and fitted with a corrosion resistant rotating handle. The maximum crank radius shall be 15 inches (381 mm) and the maximum handwheel diameter shall be 24 inches (610 mm).

C. STEM AND COUPLINGS

1. The operating stem shall be of stainless steel designed to transmit in compression at least two (2) times the rated output of the operating manual mechanism with a 40 lbs (178 N) effort on the crank or handwheel.
2. The stem shall have a slenderness ratio (L/r) less than 200. The threaded portion of the stem shall have machine cut threads of the Acme type.
3. For stems in more than one piece and with a diameter of 1¾ inches (45 mm) and larger, the different sections shall be joined together by solid bronze couplings. Stem with a diameter smaller than 1¾ inches (45 mm) shall be pinned to an extension tube. The couplings shall be grooved and keyed and shall be of greater strength than the stem.
4. Stem guides shall be fabricated from type 304L (or 316L) stainless steel. The guide shall be equipped with a UHMWPE bushing. Guides shall be adjustable and spaced in accordance with the manufacturer's recommendation. The L/r ratio shall not be greater than 200.

5. Rising stem gates shall be provided with a clear polycarbonate stem cover. The stem cover shall have a cap and condensation vents as well as a clear mylar position indicating tape. The tape shall be field applied to the stem cover after the gate has been installed and positioned.

D. YOKE. Self-contained gates shall be provided with a yoke made of structural members or formed plates. The maximum deflection of the yoke shall be 1/360 of the gate's span.

2.02 DOWNWARD-OPENING WEIR GATES

A. Downward-opening weir gates shall be Series 40 Downward-Opening Weir Gates as manufactured by H. Fontaine Ltd., or ENGINEER-approved equal.

B. GOVERNING STANDARDS. Except as modified or supplemented herein, all gates and operators shall conform to the applicable requirements of AWWA C513, latest edition.

C. FRAME. The gate frame shall be constructed of structural members or formed plate welded to form a rigid one-piece frame. The frame shall be of the flange back design, suitable for mounting on a concrete wall (CW). The guide slot shall be made of UHMWPE (ultra-high molecular weight polyethylene).

D. SLIDE. The slide shall consist of a flat plate reinforced with formed plates or structural members to limit its deflection to 1/720 of the gate's span under the design head.

E. GUIDES AND SEALS. The guides shall be made of UHMWPE (ultra-high molecular weight polyethylene) and shall be of such length as to retain and support at least two thirds (2/3) of the vertical height of the slide in the fully open position. The bottom and side seals shall be made of UHMWPE (ultra-high molecular weight polyethylene) of the self-adjusting type. A continuous compression cord shall ensure contact between the UHMWPE guide and the gate in all positions. The sealing system shall maintain efficient sealing in any position of the slide and let the water flow only in the open part of the gate. Seals shall maintain the specified leakage rate in both seating and unseating conditions.

F. LEAKAGE. Weir gates shall be substantially watertight under the design head conditions. Leakage shall not exceed 0.05 U.S. gallon per minute per foot (0.60 l/min per meter) of seal periphery under the design seating head and 0.1 U.S. gallon per minute per foot (1.25 l/min per meter) of seal periphery for the design unseating head.

G. DESIGN HEAD. Weir gates shall be designed to withstand the design head (maximum design head shall be taken as the height of the slide unless otherwise shown in the Contract Documents).

H. MATERIALS
1. Frame, yoke, stem guides, slide, stem extension - Stainless steel ASTM A240 type 304L or 316L
2. Guides, side and bottom seals, stem guide liner - Ultra high molecular weight polyethylene ASTM D4020
3. Compression cord - Nitrile ASTM D2000 M6BG 708, A14, B14, E014, E034
4. Threaded stem - Stainless steel ASTM A276 type 303 MX or 316
5. Fasteners - ASTM F593 and F594 GR1 for type 304 and GR2 for type 316
6. Pedestal, handwheel and crank - Tenzaloy aluminum
7. Gasket (between frame and wall) - EPDM ASTM 1056
8. Stem cover - Polycarbonate ASTM D3935
9. Lift nut, couplings - Manganese bronze ASTM B584 UNS-C86500

PART 3 – EXECUTION

3.01 GENERAL

A. Gate valves shall be installed in accordance with these Specifications.

3.02 QUALITY ASSURANCE

A. The manufacturer shall have experience in the production of substantially similar equipment, and shall show evidence of satisfactory operation in at least 50 installations. The manufacturer's shop welds, welding procedures and welders shall be qualified and certified in accordance with the requirement of the latest edition of ASME, Section IX.

B. The fully assembled gates shall be shop inspected, tested for operation and leakage, and adjusted before shipping. There shall be no assembling or adjusting required on the job site other than for the lifting mechanism.

C. The manufacturer shall be ISO 9001: 2000 certified.

D. SEAL PERFORMANCE TEST. The gate's sealing system should have been tested through a cycle test in an abrasive environment and should show that the leakage requirements are still obtained after 25,000 cycles with a minimum deterioration.

E. Gates and appurtenances shall be handled and installed in accordance with the manufacturer’s recommendations.

F. Following the completion of each gate installation, the gates shall be operated through at least two complete open/close cycles.

G. Gates should be checked for leakage by the contractor per the Manufacturer’s recommendations and the requirements of these Specifications.

END OF SECTION

SECTION 40 0531 – PLASTIC PROCESS PIPING

PART 1 - GENERAL

1.01 REQUIREMENT

A. Polyvinyl chloride pressure pipe for water distribution, in nominal diameters 1 inches through 4 inches.

B. Polyvinyl chloride sewer pipe for gravity sewers in nominal diameters 4 inches through 12 inches.

C. Polyvinyl chloride pressure pipe for gravity sewers and force mains in nominal diameters 3 inches through 12 inches.

1.02 REFERENCES

A. Commercial Standards:

ANSI A21.16	Protective Fusion Bonded Epoxy Coating for the Interior and Exterior
(AWWA C116)	Surfaces of Ductile Iron and Grey Iron Fittings for Water Supply Service.
ASTM D1248	Polyethylene Plastics Molding and Extrusion Materials.
ASTM D1784	Rigid Poly (Vinyl Chloride) (PVC) Compounds and Chlorinated Poly (Vinyl Chloride) (CPVC) Compounds.
ASTM D2241	Poly (Vinyl Chloride) (PVC) Pressure-Rated Pipe (SDR Series).
ASTM D2321	Underground Installation of Thermoplastic Pipe for Sewers and Other Gravity-Flow Applications.
ASTM D2444	Determination of the Impact Resistance of Thermoplastic Pipe and Fittings by Means of a Tup (Falling Weight).
ASTM D2680	Acrylonitrile-Butadiene-Styrene (ABS) and Poly (Vinyl Chloride) (PVC) Composite Sewer Piping.
ASTM D3034	Type PSM Poly (Vinyl Chloride) (PVC) Sewer Pipe and Fittings.
ASTM D3139	Joints for Plastic Pressure Pipes Using Flexible Elastomeric Seals.
ASTM D3212	Joints for Drain and Sewer Plastic Pipes Using Flexible Elastomeric Seals.
ASTM F477	Elastomeric Seals (Gaskets) for Joining Plastic Pipe.
ASTM F679	Poly (Vinyl Chloride) (PVC) Large-Diameter Plastic Gravity Sewer Pipe and Fittings.
ASTM F794	Poly (Vinyl Chloride) (PVC) Profile Gravity Sewer Pipe and Fittings Based on Controlled Inside Diameter.
ASTM F949	Poly (Vinyl Chloride) (PVC) Corrugated Sewer Pipe with Smooth Interior and Fittings.
PPI TR3	Policies and Procedures for Developing Recommended Hydrostatic Design Stresses for Thermoplastic Pipe Materials.
UNI-B-13	Recommended Standard Performance Specification for Joint Restraint Devices for Use with Polyvinyl Chloride Pipe.

1.03 SUBMITTALS

A. Submittals shall be made in accordance with Section 01 3300 – Submittals.

B. Submit shop drawings showing design of new pipe and fittings indicating alignment and grade, laying dimensions, fabrication, fittings, flanges, and special details.

1.04 QUALITY CONTROL

A. Submit manufacturer's certifications that PVC pipe and fittings meet requirements of this Section and AWWA C900, AWWA C909, and AWWA C905 for pressure pipe applications, or appropriate ASTM standard specified for gravity sewer pipe.

B. Submit manufacturer's certification that PVC pressure pipe for water lines and force mains has been hydrostatically tested at factory in accordance with AWWA C900, AWWA C909 and AWWA C905, and this Section.

C. When foreign manufactured material is proposed for use, have material tested for conformance to applicable ASTM requirements by certified independent testing laboratory located in United States. Certification from another source is not acceptable. Furnish copies of test reports to ENGINEER for review. Cost of testing paid by CONTRACTOR.

PART 2 – PRODUCTS

2.01 MATERIAL

A. Use PVC compounds in manufacture of pipe that contain no ingredient in amount that has been demonstrated to migrate into water in quantities considered to be toxic.

B. Furnish PVC pressure pipe manufactured from Class 12454-A or Class 12454-B virgin PVC compounds as defined in ASTM D1784. Use compounds pre-qualified for a 4,000 psi hydrostatic design basis, and a maximum hydrostatic design stress of 2,000 psi for water at 73°F per requirements of PPI TR3. Provide pipe which is homogeneous throughout, free of voids, cracks, inclusions, and other defects, uniform as commercially practical in color, density, and other physical properties. Deliver pipe with surfaces free from nicks and scratches with joining surfaces of spigots and joints free from gouges and imperfections which could cause leakage.

C. PVC Restrained Pipe: Must be listed on Owner's current Product Approval List.
   1. Pipe Material:
      a. DR 18: For restrained joints where shown on Drawings
      b. DR 14: For alternate to offset pipe section shown on Drawings. Do not use PVC for offset section with depth of cover greater than 20 feet or less than 4 feet. Do not use PVC in potentially petroleum contaminated areas.

D. Water Service:
   1. Bear National Sanitation Foundation Seal of Approval (NSF-PW) and meet the requirements of AWWA C900.

E. Gaskets:
   1. Gaskets shall meet requirements of ASTM F477. Use elastomeric factory-installed gaskets to make joints flexible and watertight.
   2. Flat Face Mating Flange: Full faces 1/8-inch-thick ethylene propylene (EPR) rubber.
   3. Raised Face Mating Flange: Flat ring 1/8-inch ethylene propylene (EDR) rubber, with filler gasket between OD of raised face and flange OD to protect flange from bolting moment.

F. Lubricant for rubber-gasketed joints: Water soluble, non-toxic, non-objectionable in taste and odor imparted to fluid, non-supporting of bacteria growth, having no deteriorating effect on PVC or rubber gaskets.

G. Do not use PVC in potentially or known contaminated areas.

H. Do not use PVC in areas exposed to direct sunlight.

2.02 WATER SERVICE PIPE

A. Pipe 3-inch or smaller: see Section 40 0513.73 – Plastic Process Piping.

B. Pipe 4-inch through 12-inch: AWWA C900, AWWA C909, Class 150, DR 18; AWWA C900, Class 200, DR 14 as alternate to offset pipe sections; nominal 20-foot lengths; cast-iron equivalent outside diameters.

C. Make curves and bends by deflecting joints. Do not exceed maximum deflection recommended by pipe manufacturer. Submit details of other methods of providing curves and bends for review by ENGINEER.

D. Hydrostatic Test: AWWA C900, AWWA C905, AWWA C909, ANSI A21.10 (AWWA C110); at point of manufacture; submit manufacturer's written certification.

2.03 GRAVITY SEWER PIPE

A. PVC gravity sanitary sewer pipe and storm sewer pipe shall be in accordance with provisions in following table:

ASTM or AWWA DESIGNATION	SDR (Max.)/ STIFFNESS (MIN.)	DIAMETER SIZE RANGE
D3034	SDR 35 / PS 46	4" to 15"
D3034	SDR 26 / PS 115	4" to 15"
F679	PS46	18” to 48”
F679	PS 115	18" to 48"
C900	DR 18 / N/A	4" to 12"
C909	DR 18 / N/A	4" to 12"
C905	DR 18 / N/A	14" to 30"
F949	N/A / 46 psi	12" to 36"
F949	N/A / 115 psi	8" to 10"
F794	N/A / 46 psi	8" to 30"
F794	N/A / 46 psi	24" to 36"

B. For sewers up to 12-inch diameter crossing over water lines, or crossing under water lines with less than 2 feet of separation, provide minimum 150 psi pressure-rated pipe conforming to ASTM D2241 with suitable PVC adapter couplings. Pipes shall be encased per MAG Standard Detail 404.

C. Joints: Spigot and integral wall section bell with solid cross section elastomeric or rubber ring gasket conforming to requirements of ASTM D3212 and ASTM F477, or ASTM D3139 and ASTM F477. Gaskets shall be factory-assembled and securely bonded in place to prevent displacement. Manufacturer shall test sample from each batch conforming to requirements ASTM D2444.

D. Fittings: Provide PVC gravity sewer sanitary bends, tee, or wye fittings for new sanitary sewer construction. PVC pipe fittings shall be full-bodied, either injection molded or factory fabricated. Saddle-type tee or wye fittings are not acceptable.

E. Conditioning: Conditioning of samples prior to and during tests is subject to approval by ENGINEER. When referee tests are required, condition specimens in accordance with Procedure A in ASTM D618 at 73.4°F plus or minus 3.6°F and 50 percent relative humidity plus or minus 5 percent relative humidity for not less than 40 hours prior to test. Conduct tests under same conditions of temperature and humidity unless otherwise specified.

2.04 SANITARY SEWER FORCE MAIN PIPE

A. Provide approved PVC pressure pipe conforming to requirements for water service pipe.

B. Acceptable pipe joints are integral bell-and-spigot, containing a bonded-in elastomeric sealing ring meeting requirements of ASTM F477. In designated areas requiring restrained joint pipe and fittings, use approved joint restraint device conforming to UNI-B-13, for PVC pipe 12-inch diameter and less.

C. Fittings: Provide approved ductile iron fittings as per these Specifications, except furnish fittings with one of following approved internal linings:
   1. Nominal 40 mils (35 mils minimum) virgin polyethylene complying with ASTM D1248, heat fused to interior surface of fitting
   2. Nominal 40 mils (35 mils minimum) polyurethane
   3. Nominal 40 mils (35 mils minimum) ceramic epoxy
   4. Nominal 40 mils (35 mils minimum) fusion bonded epoxy

D. Exterior Protection: Provide polyethylene wrapping of ductile-iron fittings.

E. Hydrostatic Tests: Hydrostatically test pressure rated pipe in accordance with Paragraph 2.02D.

2.05 BENDS AND FITTINGS FOR PVC PRESSURE PIPE

A. Bends and Fittings: ANSI A21.10 or ANSI A21.53, ductile iron; ANSI A21.11 single rubber gasket push-on type joint; minimum 150 psi pressure rating. Approved restrained joints, 250 psi, may be provided for up to 12 inches in diameter (water or sanitary).

B. Provide approved restrained joint fittings: Integral restrained joint fittings and pipe do not require secondary restraint.

PART 3 – EXECUTION

3.01 PROTECTION

A. Store pipe under cover out of direct sunlight and protect from excessive heat or harmful chemicals in accordance with manufacturer's recommendations.

3.02 INSTALLATION

A. Install PVC pipe in accordance with these Specifications, ASTM D2321 for Sewer Pipe, and manufacturer's recommendations.

B. Install PVC water service pipe to clear utility lines and have minimum depth of cover below property line grade of street, unless otherwise required by Drawings:
   1. Water service pipe 12 inches in diameter and smaller: 3 feet of cover.

C. Avoid imposing strains that will overstress or buckle pipe when lowering pipe into trench.

D. Hand shovel pipe bedding under pipe haunches and along sides of pipe barrel and compact to eliminate voids and ensure side support.

E. Store PVC pipe under cover out of direct sunlight. Protect pipe from excessive heat or harmful chemicals. Prevent damage by crushing or piercing.

F. Allow PVC pipe to cool to ground temperature before backfilling when assembled out of trench to prevent pullout due to thermal contraction.

3.03 PVC RESTRAINED MECHANISM

A. Do not apply lubricant to spline or pipe or coupling spline grooves.

B. Do not use excessive force while inserting the spline through coupling.

C. Insert spline until it is fully seated around circumference of pipe.

D. Field Cutting of Pipe Ends:
   1. Perform by workers certified by manufacturer.
   2. Use a PVC pipe cutter and provide square ends.
   3. Use manufacturer approved power routing and grooving tool to field fabricate required pipe groove.

END OF SECTION

SECTION 40 0533 – HIGH DENSITY POLYETHYLENE (HDPE) SOLID WALL PIPE

PART 1 – GENERAL

1.01 THE REQUIREMENT

A. Furnish and install high density polyethylene (HDPE) pipe and fittings in accordance with the Contract Documents.

1.02 SUBMITTALS

A. Submittals shall be furnished in accordance with Section 01 3300 – Submittal Procedures.

1.03 QUALITY ASSURANCE

A. HDPE pipe and fittings shall be of the N-12 low head pipe type.

B. This section contains references to some or all of the following documents, most recent edition. They are a part of this section as specified and modified. In case of conflict between the requirements of this section and those of the listed documents, the requirements of this section shall prevail.

Reference	Title
AASHTO M252 & M294	Standard Specification for Corrugated Polyethylene Pipe
ASTM D2321	Standard Practice for Underground Installation of Thermoplastic Pipe for Sewers and Other Gravity-Flow Applications
ASTM D3212	Standard Specification for Joints for Drain and Sewer Plastic Pipes using Flexible Elastomeric Seals
ASTM D3350	Standard Specification for Polyethylene Plastics Pipe and Fittings Materials
ASTM F2306	Standard Specification for 12” to 60” Annular Corrugated Profile-Wall Polyethylene Pipe and Fittings for Gravity-Flow Storm Sewer and Subsurface Drainage Applications
ASTM F2487	Standard Practice for Infiltration and Exfiltration Acceptance Testing of Installed Corrugated High Density Polyethylene Pipe
ASTM F477	Standard Specification for Elastomeric Seals (Gaskets) for Joining Plastic Pipe

PART 2– PRODUCTS

2.01 HDPE PIPE

A. Pipe Requirements: Low Head pipe shall have a smooth interior and annular exterior corrugations.
   1. 12”-diameter pipe shall meet AASHTO M294, Type S or ASTM F2306 with the modifications listed herein.
   2. Manning’s *n* value for use in design shall be 0.012.
   3. Where low head applications sustain continuous pressure, the sustained pressure shall not exceed 5 psi and the surge pressure shall not exceed 10 psi.

B. Joint Performance:
   1. The 12” pipe shall be watertight according to the requirements of ASTM D3212. Spigots shall have two gaskets meeting the requirements of ASTM F477. Gaskets

shall be installed by the pipe manufacturer and covered with a removable wrap to ensure the gasket is free from debris. A joint lubricant available from the manufacturer shall be used on the gasket and bell during assembly.

2. 12” diameters shall have a reinforced bell with a polymer composite band. The bell tolerance device shall be installed by the manufacturer.

C. Fittings: Fittings shall conform to AASHTO M252 and M294, or ASTM 2306. Bell and spigot connections shall utilize a spun on, welded, or integral bell and spigot with gaskets meeting ASTM F477. Fitting joints shall meet the watertight joint performance requirements of ASTM D3212.

D. Field Pipe and Joint Performance: To assure watertightness, field performance verification may be accomplished by testing in accordance with ASTM F2487. Appropriate safety precautions must be used when field-testing any pipe material. Contact the manufacturer for recommended leakage rates.

E. Material Properties: Virgin material for pipe and fitting production shall be high-density polyethylene conforming with the minimum requirements of cell classification 435400C for the corrugated exterior profile, and 4456A for the interior liner as defined and described in the latest version of ASTM D3350, except that carbon black content should not exceed 4%. The 12” virgin pipe material shall comply with the notched constant ligament-stress (NCLS) test as specified in Sections 9.5 and 5.1 of AASHTO M294 and ASTM F2306, respectively. The interior liner resin shall have a material designation code of PE3408/PE3608 by the Plastic Pipe Institute and a Hydrostatic Design Basis of 1600psi.

F. Pipe Dimensions

	Nominal Diameter
Pipe I.D. in (mm)	12 (300)
Pipe O.D. in (mm)	14.5 (368)
Inner Liner Thickness in (mm)	0.035 (0.9)
Min. Pipe Stiffness @ 5% Deflection #/in/in (kN/m^2)	50 (345)

PART 3– EXECUTION

3.01 INSTALLATION

A. General: In accordance with the manufacturer’s recommendations.

B. Installation shall also be in accordance with ASTM D2321, with the exceptions that minimum cover for 12” diameter pipes shall be three feet in single run applications. Backfill for minimum cover situations shall consist of Class 1 or Class 2 (minimum 90% SPD) material. Maximum fill heights depend on embedment material and compactions level.

3.02 TESTING

A. Testing shall be in accordance with ASTM F2487.

END OF SECTION

SECTION 40 0551 – COMMON WORK RESULTS FOR PROCESS VALVES

PART 1 - GENERAL

1.01 THE REQUIREMENT

A. Furnish and install all valves, actuators, and appurtenances, complete and operable, in accordance with the Contract Documents. These specifications shall not apply to valves, actuators, and appurtenances to be provided by process equipment vendors as part of process systems or equipment already approved by the ENGINEER.

B. The provisions of this Section shall apply to all valves and valve actuators except where otherwise indicated. Valves and actuators in particular locations may require a combination of units, sensors, limit switches, and controls indicated in other Sections of the Specifications.

C. American Iron and Steel (AIS) requirement applies to this Section. All iron and steel products used in this project must be produced in the United States.

D. Where a valve is to be supported by means other than the piping to which it is attached, the CONTRACTOR shall obtain from the valve manufacturer a design for support and foundation that satisfies the criteria in the applicable Sections of Division 46 – Water and Wastewater Equipment. The design, including drawings and calculations sealed by an engineer, shall be submitted with the Shop Drawings. When the design is approved, the support shall be provided.

E. Unit Responsibility: A single manufacturer shall be made responsible for coordination of design, assembly, testing, and furnishing of each valve; however, the CONTRACTOR shall be responsible for compliance with the requirements of each valve section. Unless indicated otherwise, the responsible manufacturer shall be the manufacturer of the valve.

F. Single Manufacturer: Where two or more valves of the same type and size are required, the valves shall be furnished by the same manufacturer.

1.02 SUBMITTALS

A. General: Submittals shall be furnished in accordance with Section 01 3300 – Submittal Procedures.

B. Shop Drawings: Shop Drawings shall contain the following information:
   1. Valve name, size, Cv factor, pressure rating and identification number (if any).
   2. Complete information on valve actuator, including size, Manufacturer, model number, limit switches, and mounting.
   3. Cavitation limits for all control valves.
   4. Assembly drawings showing part nomenclature, materials, dimensions, weights, and relationships of valve handles, handwheels, position indicators, limit switches, integral control systems, needle valves, and control systems.

C. Technical Manual: The Technical Manual shall contain the required information for each valve.

D. Spare Parts List: A Spare Parts List shall contain the required information for each valve assembly, where indicated.

1.03 QUALITY ASSURANCE

A. Valve manufacturer and model shall be as described in the Drawings or ENGINEER-approved equal.

1.04 SPARE PARTS

A. The CONTRACTOR shall furnish the required spare parts suitably packaged and labeled with the valve name, location, and identification number. The CONTRACTOR shall also furnish the name, address, and telephone number of the nearest distributor for the spare parts of each valve. Spare parts are intended for use by the OWNER after expiration of the correction of defects period.

PART 2 - PRODUCTS

2.01 PRODUCTS

A. General: Valves and gates shall be new and of current manufacture. Shut-off valves 6 inches and larger shall have actuators with position indicators. Buried valves shall be provided with valve boxes and covers containing position indicators and valve extensions. Manual shut-off valves mounted higher than 7 feet above working level shall be provided with chain actuators. Valves with no clear way to determine position shall be provided with position indicators. Stem extensions shall be provided on valves where operation of the valve cannot be easily accomplished from ground level.

B. Valve Actuators: Unless otherwise indicated, valve actuators shall be in accordance with these Specifications.

C. Valve Labeling: A label shall be provided on all shut-off valves and control valves except for hose bibs. The label shall be of 1/16-inch plastic or steel, minimum 2 inches by 4 inches in size and shall by permanently attached to the valve or on the wall adjacent to the valve as directed by the ENGINEER.

D. Valve Testing: As a minimum, unless otherwise indicated or recommended by the ENGINEER, valves 3 inches in diameter and smaller shall be tested in accordance with manufacturer's standard and 4 inches in diameter and larger shall be factory tested as follows:

1. Hydrostatic Testing: Valve bodies shall be subjected to internal hydrostatic pressure equivalent to twice the water rated pressure of the valve. Metallic valves rating pressures shall be at 100°F and plastic valves shall be 73°F, or at higher temperature according to type of material. During the hydrostatic test, there shall be no leakage through the valve body, end joints, or shaft seals, nor shall any part of the valve be permanently deformed. The duration shall be sufficient time to allow visual examination for leakage. Test duration shall be at least 10 minutes.
2. Seat Testing: Valves shall be tested for leaks in the closed position with the pressure differential across the seat equal to the water rated pressure of the valve. The duration of test shall be sufficient time to allow visual examination for leakage. Test duration shall be at least 10 minutes. Leakage past the closed valve shall not exceed 1 fluid ounce per hour per inch diameter for metal seated valves and drop-tight for resilient seated valves.
3. Performance Testing: All valves shall be shop operated from fully closed to fully open position and reverse under no-flow conditions in order to demonstrate the valve assembly operates properly.

E. Valve Marking: Valve bodies shall be permanently marked in accordance with MSS SP25 - Standard Marking Systems for Valves, Fittings, Flanges, and Unions.

2.02 MATERIALS

A. General: Materials shall be suitable for the intended application. Materials not indicated shall be high-grade standard commercial quality, free from defects and imperfections that might affect the serviceability of the product for the purpose for which it is intended. Unless otherwise indicated, valve and actuator bodies shall conform to the following requirements:
   1. Cast Iron: Close-grained gray cast iron, conforming to ASTM A48 - Gray Iron Castings, Class 30, or to ASTM A126 - Gray Iron Castings for Valves, Flanges and Pipe Fittings.
   2. Ductile Iron: ASTM A536 - Ductile Iron Castings, or to ASTM A395 - Ferritic Ductile Iron Pressure-Retaining Castings for Use at Elevated Temperatures.
   3. Steel: ASTM A216 - Steel Castings, Carbon Suitable for Fusion Welding for High-Temperature Service, or to ASTM A515 - Pressure Vessel Plates, Carbon Steel, for Intermediate- and Higher-Temperature Service.
   4. Bronze: ASTM B62 - Composition Bronze or Ounce Metal Castings, and valve stems not subject to dezincification shall conform to ASTM B584 - Copper Alloy Sand Castings for General Applications.
   5. Stainless Steel: Stainless steel valve and operator bodies and trim shall conform to ASTM A351 - Steel Castings, Austenitic, for High-Temperature Service, Grade CF8M, or shall be Type 304 or 316 stainless steel.
   6. PVC: Poly Vinyl Chloride materials for valve body, flanges, and cover shall conform to Cell Classification 12454.
   7. CPVC: Chlorinated Poly Vinyl Chloride materials for valve body, flanges, and cover shall conform to Cell Classification 23447.
   8. NSF Standard 14 and 61: All materials shall be listed for use in contact with potable water, where applicable.

B. Bodies: Valve bodies shall be cast, molded (in the case of plastic valves), forged, or welded of the materials indicated, with smooth interior passages. Wall thicknesses shall be uniform in agreement with the applicable standards for each type of valve, without casting defects, pinholes, or other defects that could weaken the body. Welds on welded bodies shall be done by certified welders and shall be ground smooth. Valve ends shall be as indicated, and be rated for the maximum temperature and pressure to which the valve will be subjected.

C. Bonnets: Valve bonnets shall be clamped, screwed, or flanged to the body and shall be of the same material, temperature, and pressure rating as the body. The bonnets shall have provision for the stem seal with the necessary glands, packing nuts, or yokes. Below grade valves with above grade worm gear drives/handwheels or electric actuators shall include extended bonnets for mating up to the worm gear drives/handwheel or electric actuators.

D. Stems: Valve stems shall be of the materials indicated, or, if not indicated, of the best commercial material for the specific service, with variable stem packing, O-rings, Chevron V-type packing, or other suitable seal. Where subject to dezincification, bronze valve stems shall conform to ASTM B62, containing not more than 5 percent of zinc or more than 2 percent of aluminum, with a minimum tensile strength of 30,000 psi, a minimum yield strength of 14,000 psi, and an elongation of at least 10 percent in 2 inches. Where dezincification is not a problem, bronze conforming to ASTM B584 may be used, except that zinc content shall not exceed 16 percent.

E. Stem Guides: Stem guides shall be provided, spaced 10-feet on centers unless the manufacturer can demonstrate by calculation that a different spacing is acceptable. Submerged stem guides shall be 304 stainless steel.

F. Internal Parts: Internal parts and valve trim shall be as indicated for each individual valve. Where not indicated, valve trim shall be of Type 316 stainless steel or other best suited material.

G. Nuts and Bolts: Nuts and bolts on valve flanges and supports shall be in accordance with these Specifications.

H. Coatings: Valve coatings shall be in accordance with these Specifications, or as recommended by the valve manufacturer.

I. Environment: Submerged valves shall be of stainless-steel construction as recommended by the valve manufacturer or as approved by the ENGINEER.

2.03 VALVE ACCESSORIES

Valves shall be furnished complete with the accessories required to provide a functional system.

PART 3 - EXECUTION

3.01 VALVE INSTALLATION

A. General: Valves, actuating units, stem extensions, valve boxes, and accessories shall be installed in accordance with the Manufacturer's written instructions and as indicated. Gates shall be adequately braced to prevent warpage and bending under the intended use. Valves shall be firmly supported to avoid undue stresses on the pipe.

B. Access: Valves shall be installed with easy access for actuation, removal, and maintenance and to avoid interference between valve actuators and structural members, handrails, or other equipment.

C. Valve Accessories: Where combinations of valves, sensors, switches, and controls are indicated, the CONTRACTOR shall properly assemble and install such items so that systems are compatible and operating properly. The relationship between interrelated items shall be clearly noted on Shop Drawing submittals.

END OF SECTION

SECTION 40 0557 – ACTUATORS FOR PROCESS VALVES AND GATES

PART 1 - GENERAL

1.01 THE REQUIREMENT

A. Provide all valve and gate actuators and appurtenances, complete and operable, in accordance with the Contract Documents.

B. The provisions of this Section shall apply to all valves and gates, except where otherwise indicated in the Contract Documents.

C. Single Manufacturer: Where two or more valve or gate actuators of the same type or size are required, the actuators shall all be produced by the same Manufacturer.

1.02 SUBMITTALS

A. General: Submittals shall be furnished in accordance with Section 01 3300 – Submittal Procedures and these Specifications. The shop drawing shall substantiate compliance with the Contract Documents requirements.

B. Shop Drawings: Shop Drawings of all actuators shall be submitted together with the valve and gate submittals as a complete package.

C. Operation & Maintenance Manuals: Operation and Maintenance Manual shall be furnished in accordance with these Specifications.

PART 2 - PRODUCTS

2.01 GENERAL

A. General: Unless otherwise indicated, all shut-off and throttling valves, and externally actuated valves and gates, shall be provided with manual or power actuators. All actuators shall be complete and operable with mounting hardware, motors, gears, controls, wiring, solenoids, hand wheels, levers, chains, and extensions, as applicable. All actuators shall be capable of holding the valve in any intermediate position between fully open and fully closed without creeping or fluttering.

B. Manufacturers: Where indicated, certain valves and gates may be provided with actuators manufactured by the valve or gate Manufacturer. Where actuators are furnished by different manufacturers, coordinate selection to have the fewest number of manufacturers possible.

C. Materials: All actuators shall be current models of the best commercial quality materials and liberally sized for the maximum expected torque. All materials shall be suitable for the environment in which the valve or gate is to be installed.

D. Mounting: All actuators shall be securely mounted by means of brackets or hardware specially designed and sized for this purpose and of ample strength. The word "open" shall be cast on each valve or actuator with an arrow indicating the direction to open in the counter-clockwise direction. All gear and power actuators shall be equipped with position indicators. Where possible, manual actuators shall be located between 48 and 60 inches above the floor or permanent working platform.

E. Standard: Unless otherwise indicated and where applicable, all actuators shall be in accordance with ANSI/AWWA C540 - AWWA Standard for Power-Actuating Devices for Valves and Sluice Gates.

F. Functionality: Electric, pneumatic, and hydraulic actuators shall be coordinated with the power requirements of these Specifications.

2.02 MANUAL ACTUATORS

A. General: Unless otherwise indicated, all valves and gates shall be furnished with manual actuators. Valves in sizes up to and including 8 inches shall have direct acting lever of the Manufacturer's best standard design. Larger valves and gates shall have gear-assisted manual handwheel actuators, with an operating pull of maximum 60 pounds on the rim of the handwheel. All buried and submerged gear-assisted valves, all gates, all gear-assisted valves for pressures higher than 250 psi, all valves 30 inches in diameter and larger, and where so indicated, shall have worm-gear actuators, hermetically-sealed and grease-packed, where buried or submerged. All other valves 10 inches to 24 inches in diameter may have traveling-nut actuators, worm-gear actuators, spur- or bevel-gear actuators, as appropriate for each valve.

B. Buried Valves: Unless otherwise indicated, all buried valves shall have extension stems (or bonnets where shown on the plans) to grade, with square nuts or floor stands, position indicators, and cast-iron or steel pipe extensions with valve boxes, covers and operating keys. Where so indicated, buried valves shall be in cast-iron, concrete, or similar valve boxes with covers of ample size to allow operation of the valve actuators. Covers of valve boxes shall be permanently labeled as requested by the OWNER, or the ENGINEER. Wrench-nuts shall comply with AWWA C500 - Metal Seated Gate Valves for Water Supply Service, and a minimum of 2 operating keys, or one key per 10 valves, whichever is greater, shall be furnished to the OWNER.

C. Buried and Submerged Actuators: Buried and submerged valve actuators and gear assemblies shall be provided with Type 304 and/or 316 stainless steel bolting and trim, and shall be rated for continuous submerged service. If buried, the valve actuator shall be suitable for a submerged service at a water depth of 10 feet (minimum). If submerged, the actuator shall be suitable for a submerged service at a water depth of 30 feet (minimum).

2.03 ELECTRIC ACTUATORS

A. General: The CONTRACTOR shall verify with the vendor/manufacturer that each electric actuator (supplied and installed) delivers the necessary torque requirements for opening and closing the corresponding valve that it is actuating, and provide supporting documentation to the ENGINEER. Electric actuators shall be suitable as specified on the plans for use on 115VAC, 1-phase, or 480 VAC, 3-phase, 60Hz power supply. The actuator shall include an internal high-torque reversible electric motor, terminal block, heat-treated alloy steel gearing, a minimum of two (2) 1/2" NPT conduit connections, reduction gearing, valve stem drive nut/bushing, position limit switches, mechanical overload torque switches, ductile iron gear case, automatic de-clutchable handwheel, and a two- (2-) year original manufacturer’s warranty. In order to maintain the integrity of the enclosure, setting of the torque levels, position limits and configuration of the indication contacts, etc. shall be carried out without the removal of any actuator covers over an Infrared interface. Sufficient commissioning tools shall be provided with the actuators and must meet the enclosure protection and certification levels of the actuators. Commissioning tools shall not form an integral part of the actuator and must be removable for secure storage/authorized release. In addition, provision shall be made for the protection of configured actuator settings by a means independent of access to the commissioning tool. The actuator shall include a device to ensure that the motor runs with the correct rotation for the required direction of valve travel irrespective of the connection sequence of the power supply.

B. Actuator Sizing: The actuator shall be sized to guarantee valve closure at the specified differential pressure and temperature. The safety margin of motor power available for seating and unseating the valve shall be sufficient to ensure torque switch trip at maximum valve torque with the supply voltage 10% below nominal. For linear operating valves, the operating speed shall be such as to give valve closing and opening at approximately 10-12 inches per minute unless otherwise noted. Actuator manufacturer/vendor shall confirm appropriate opening and closing times for the valve the actuator is operating.

C. Gears: Motor speed reduction shall be by means of a gear train consisting of hardened steel spur gears and self-locking worm and worm gear set. The worm shall be heat treated alloy steel and have worm thread surface rolled or ground. The worm gear shall be bronze. Non-metallic gears in the power train are not acceptable.

D. Environmental: Actuators shall be suitable for indoor and outdoor use. The actuator shall be capable of functioning in an ambient temperature ranging from -33°C (-27°F) to 70°C (158°F), up to 100% relative humidity. Actuators for hazardous area applications shall meet the area classification, gas group and surface temperature requirements specified in data sheet.

E. Rotating Components: All gearing and shafting shall be supported on anti-friction bearings. All thrust components shall be supported by use of tapered roller bearings.

F. Handwheel Drive: The actuator shall be furnished with a handwheel located in a 90-degree plane from the actuator output drive, with a maximum rim pull requirement of 60 pounds for valve travel loads. An external manual declutch lever shall be included to place actuator in the manual mode. The lever shall not require more than a 10-pound force to engage even when the valve has been tightly seated. The lever is to be padlockable in either handwheel or motor mode. Operation by motor shall not cause the handwheel to rotate, or operation of the handwheel shall not cause the motor to rotate. Handwheel shall operate in the clockwise direction to close.

G. Lubrication: All gearing and bearings shall be grease lubricated and suitable for year-round service based on prevailing ambient temperature conditions.

H. Electric Motors: The motor shall an integral part of the actuator, designed specifically for valve actuator applications. It shall be a low inertia high torque design, class F insulated with a class B temperature rise giving a time rating of 15 minutes at 40°C (104°F) at an average load of at least 33% of maximum valve torque. Temperature shall be limited by thermostats embedded in the motor end windings and integrated into its control. Electrical and mechanical disconnection of the motor should be possible without draining the lubricant from the actuator gear case.

I. Motor Protection: Protection shall be provided for the motor as follows:
   1. Stall - the motor shall be de-energized within 8 seconds in the event of a stall when attempting to unseat a jammed valve.
   2. Over temperature - thermostat will cause tripping of the motor. Auto-reset on cooling
   3. Single phasing - lost phase protection.
   4. Direction – phase rotation correction.

J. Limit Switches: Limit switches shall be geared to the drive mechanism and in step with actual valve position at all times, whether operation is by power or manual mode. Switches shall be activated by a rotor type design. Contacts shall be silver and have a rating of 10 amps at 120/230 VAC, a minimum of (3) N.O. and (3) N.C. contacts shall be provided for each direction of travel. Should auxiliary limit switch contacts for intermediate switch positions be required, please specify here. The limit switch gear mechanism shall be enclosed to prevent entrance of foreign matter or wire entanglement. Use of cams or screws to set switches or designs requiring battery back-up methods to ensure position

control in the event of a power failure, are unacceptable. Torque and turns limitation to be adjustable as follows:

1. Position setting range – multi-turn: 2.5 to 100,000 turns, with resolution to 15 deg. of actuator output.
2. Position setting range – direct drive part turn actuators: 90° +/-10°, with resolution to 0.1 deg. of actuator output.
3. Torque setting: 40% to 100% rated torque.

K. Torque Switches: The actuator shall include a variable torque switch to interrupt the motor power circuit when an obstruction is encountered in either direction of travel or when torque seating of valves is required for tight shut off. The torque switch shall have a calibrated dial for adjustment and have means to ensure maximum actuator rating is not exceeded. Contacts shall have the same construction and rating as the limit switch. Mechanical torque springs for load control shall be field replaceable without need of actuator dismantling or removal of the worm assembly. Torque control designs which do not employ mechanical torque springs are unacceptable.

L. Position Indication: Local position indication for quarter turn valves shall be by an indicator dial located on the gear operator and graduated in 25-degree increments. For rising stem multi-turn actuators, a dial window indicator shall be located on the limit switch compartment cover and labeled 0 to 100% open and graduated in 1% increments. Four contacts shall be provided which can be selected to indicate any position of the valve. Provision shall be made for the selection of a normally closed or open contact form. Contacts shall maintain and update position indication during hand wheel operation when all external power to the actuator is isolated. The contacts shall be rated at 5A, 250V AC, 30V DC. As an alternative to providing valve position any of the four above contacts shall be selectable to signal one of the following:

1. Valve opening, closing, or moving
2. Thermostat tripped, lost phase
3. Motor tripped on torque in mid travel, motor stalled
4. Remote selected
5. Actuator being operated by hand wheel
6. Provision shall be made in the design for an additional 4 contacts having the same functionality. Provision shall be made in the design for the addition of a contactless transmitter to give a 4-20mA analogue signal corresponding to valve travel for remote indication when required. The transmitter will auto range to the set limits.

M. Integral Starter and Transformer: The reversing starter, control transformer and local controls shall be integral with the valve actuator suitably housed to prevent breathing and condensation. The starter shall be suitable for 1,200 starts per hour (minimum) and of rating appropriate to motor size. The controls supply transformer shall be fed from two of the incoming three phases and incorporate overload protection. It shall have the necessary tappings and be adequately rated to provide power for the following functions:

1. Energization of the contactor coils.
2. 24V DC output for remote controls.
3. Supply for all the internal electrical circuits.

2.04 ELECTRICAL CONTROLS

A. At a minimum, the actuator shall be furnished with power and control terminal strips, limit switches, torque switches, all housed in a control compartment. The rectangular enclosure shall have a bonded O-ring seal and a hinged cover. Cover bolting shall be captive stainless hex head screws.

B. Controls shall be an integrated modular package, completely wired and be easily removable or replaceable, as a complete package, by removal of four (4) captive screws.

Motor leads and power supply leads will be terminated to the terminal strips located on the modular control package. Power supply terminals (5 points minimum) and control supply terminal (48 points minimum) shall be physically isolated from each other to protect against transient voltages. The terminal strips shall be completely shrouded with a high impact resistant plastic to avoid accidental terminal contact by personnel. The module is to include a snubber circuit to provide control voltage protection for switches and electronic modules for voltage surges. All electrical components of the modular package, such as reversing contactor, transformer, etc., shall be unidirectional plug connected to provide easy removal and replacement without concerns for proper wiring connections. All optional control requirements such as modulating control, 2-wire control, interposing relays, etc. shall be plug-in printed circuit type boards having gold plated contact connectors. Unless otherwise specified, all PC boards must be temperature rated -40°C to +70°C. Ease of replacement or upgrading shall be of paramount consideration.

2.05 OPEN-CLOSE SERVICE CONTROLS

A. Reversing Contactor: Control voltage shall be 120 volts, 50 or 60 Hz. N.O. Seal-in contacts for momentary contact pushbutton control and N.C. contacts for electrical interlock shall be supplied. The following options are available with the integral reversing starter: Motor Overload Relays, Auxiliary Starter Contacts, Phase Sentry.

B. Control Power Transformer: The transformer assembly shall provide 120, 18 and 12 Vac. It shall be epoxy impregnated and encapsulated to prevent moisture incursion and shall be completely wired as an assembly and plug connected to the modular package.

C. Pushbuttons: Each actuator shall be supplied with open-stop-close pushbuttons furnished integrally mounted. Pushbuttons shall be double O-ring sealed and include a protective silicone boot. Seal material shall be resistant to ozone and ultraviolet light. When integrally mounted pushbuttons are specified, the design shall permit operation of the buttons when the electrical enclosure cover is open.

D. Indicating Lights: The actuator shall include two (2) long life high intensity LED type pilot lights to indicate open, closed, and intermediate valve position (both lights on). Red shall indicate valve open and green shall indicate valve closed. An additional LED pilot light shall be furnished to indicate power is on. A fourth optional LED pilot light is available to indicate torque switch trip.

E. Selector Switch: The actuator shall include a 3-position selector switch, for local (hand)-off-remote (auto) control. If specified, the switch shall be padlockable in any position. A tumbler keylock option may be specified.

2.06 ACTUATORS FOR MODULATION DUTY

A. The starter shall be suitable for 1,200 starts per hour.

B. Control Module: For modulating applications, the control module shall be of the electronic solid-state type to control the position of an AC valve operator motor. Provide input/output per Contract Documents, including but not limited to: 4-20 mA analog input position control from PLC; 4-20 mA analog output position indication to PLC; and digital outputs to PLC for motor running, ready mode, remote mode, over torque condition and trouble. Position control shall be within +/- 2 percent of signal position.

Input Signal: The control unit shall be suited to receive an input set-point from an external 4-20 mA DC source or 120 VAC OPEN and CLOSE digital commands to remotely operate the motor in the forward and reverse directions, whichever is required for modulating purposes.

C. The controller shall compare the input signal with the feedback signal to produce an error signal. The controller shall cause the motor to move the valve or gate in a direction so as to reduce the magnitude of the error signal. The controller positioning accuracy shall be plus or minus 1.0 percent of travel or better. Operating speeds, unless otherwise stated, shall be 90 degrees per minute for rotary operators. It shall be possible to adjust Dead Band (0-9.9% of travel) and a Motion Inhibit Timer (2-99 secs), and select action upon loss of signal.

2.07 MANUFACTURERS

A. Rotork - IQT, or ENGINEER-approved equal.

PART 3 - EXECUTION

3.01 SERVICES OF MANUFACTURER

A. Field Adjustments: Field representatives of manufacturers of valves or gates with pneumatic, hydraulic, or electric actuators shall adjust actuator controls and limit-switches in the field for the required function.

B. Performance Test Certificate: Each actuator must be performance tested and individual test certificates shall be supplied free-of-charge. The test equipment should simulate a typical valve load and the following parameters should be recorded:
   1. Current at maximum torque setting
   2. Torque at maximum torque setting. Torque curves for both open and close strokes for each MOV shall be provided.
   3. Flash Test Voltage
   4. Actuator Output Speed or Operating Time; in addition, the test certificate should record details of specification, such as closing direction, and wiring diagram code number.

3.02 INSTALLATION

A. All valve and gate actuators and accessories shall be installed in accordance with these Specifications. Actuators shall be located to be readily accessible for operation and maintenance, without obstructing walkways. Actuators shall not be mounted where shock or vibrations will impair their operation, nor shall the support systems be attached to handrails, process piping, or mechanical equipment.

B. Coordinate all installation with the valve supplier. The supplier shall be responsible for fabrication, coordination, and assembly for a complete operating system.

C. Inspection, Startup, and Field Adjustment: An authorized representative of the Manufacturer shall visit the site and witness the following:
   1. Installation of the equipment for not less than 1 day.
   2. Inspection, checking, and adjusting the equipment for not less than 1 day.
   3. Startup and field-testing for proper operation for not less than 1 day.

END OF SECTION

SECTION 40 0561 – GATE VALVES

PART 1 - GENERAL

1.01 THE REQUIREMENT

A. The CONTRACTOR shall provide gate valves and appurtenances, complete and operable, in accordance with these Specifications and the Contract Documents.

B. American Iron and Steel (AIS) requirement applies to this section. All iron and steel products used in this project must be produced in the United States.

1.02 SUBMITTALS

A. Furnish submittals in accordance with Section 01 3300 – Submittal Procedures.

PART 2 - PRODUCTS

2.01 GATE VALVES (16-inch and smaller)

A. General. Gate valves for water service shall conform to the AWWA Standard for "Resilient-Seated Gate Valves" (AWWA C509, latest edition). Valves shall be of the resilient seated type with non-rising stem, closing in a clockwise direction. Sealing mechanism shall provide zero leakage at the water working pressure against line flow from either direction. The rubber covered gate shall not be wedged into a pocket nor slide across the seating surface to obtain a tight closure. Synthetic thrust washers shall be provided to minimize operating torque. Valves shall be flanged or have ends to match pipe and shall have solid bronze internal working parts.

B. Stems. Gate valve stems shall be of bronze containing not more than 5 percent of zinc nor more than 2 percent of aluminum, and shall have a minimum tensile strength of 60,000 psi, a yield strength of 35,000 psi, and an elongation of at least ten percent in 2-inches, as determined by a test coupon poured from the same ladle from which the valve stems to be furnished are poured. Seats. Resilient valve seats shall consist of styrene butadiene (SBR) rubber permanently bonded to a high-strength iron wedge gate. The gate shall be totally encapsulated. The bonding process shall meet the requirements of ASTM D429. Mechanically attached seats or seats attached to the valve body shall not be accepted.

C. Operators. Buried valves shall be provided with a 2-inch square operating nut, extension stems, and valve well, as required in Part 2.01. Unless otherwise shown on the drawings, valves in vaults or above grade shall be supplied with a cast iron handwheel and be rising stem. All buried gate valves shall be non-rising stem.

D. Pressure Rating and Testing. Valves shall be rated for a working water pressure of 200 psi and shall be seat tested at this pressure with no leakage. Shell test of 400 psi shall be applied to body with valve in the open position with no leakage through the metal, flanged joints, or stem seals.

E. Epoxy Coating. Valve and operator shall be epoxy coated as specified in part 2.01 of this Section, except coating shall have 12 mil thickness.

F. Spare Parts. Each valve shall be supplied with a spare set of upper and lower O-rings and weather seal.

G. Manufacturer. Resilient seat gate valves shall be manufactured by U.S. Pipe, American Darling CRS-80, ITT Kennedy, or ENGINEER-approved equivalent.

EXECUTION

3.01 GENERAL

A. Gate valves shall be installed in accordance with the provisions of these Specifications. Care shall be taken that valves in plastic lines are well-supported at each end of the valve.

END OF SECTION

SECTION 40 0562 – PLUG VALVES

PART 1 – GENERAL

1.01 THE REQUIREMENT

A. Provide plug valves and appurtenances, complete and operable, in accordance with the Contract Documents.

1.02 SUBMITTALS

A. Furnish submittals in accordance with Section 01 3300 – Submittal Procedures.

1.03 OPERATION AND MAINTENANCE MANUAL

A. Provide six (6) hard copies plus one (1) electronic version in PDF format.

B. Operation and Maintenance Manual shall be furnished in accordance with these Specifications.

1.04 QUALITY ASSURANCE

A. The manufacturer shall provide a 2-year equipment warranty.

1.05 SPARE PARTS

A. Spares shall be as requested by the ENGINEER. Payment for spares shall be made in accordance with the General Conditions.

B. A list of spare parts for each piece of equipment shall be obtained from the manufacturer and submitted at the same time as Shop Drawings. The name, address, and telephone number of the nearest distributor for each piece of equipment shall be furnished.

PART 2 – PRODUCTS

2.01 ECCENTRIC PLUG VALVES

A. General: Plug valves shall be of the quarter-turn, non-lubricated, eccentric type with resilient faced plug. Plug valves shall be designed for a working pressure of 175 psi for valves 12” and smaller, 150 psi for valves 14” and larger. Valves shall provide tight shut-off at rated pressure. Valves 20” and smaller shall have round port design. 24” and larger valves shall have rectangular port design. Minimum port area for all valves shall be 80% of corresponding pipe area.

B. Valve Body: The plug valve body shall be cast iron ASTM A126 Class B with welded-in overlay of greater than 90% nickel alloy content on all surfaces contacting the face of the plug. Sprayed, plated, nickel welded rings or seats screwed into the body are not acceptable. All cover bolts shall be corrosion resistant. The “SEAT END” of the valve shall be designated on the valve body.

C. Coating: Plug valves shall be coated in accordance with Section 09 97 00 – Special Coating

D. Valve Plug: The valve plug shall be cast iron ASTM A126 Class B, with Buna-N resilient seating surface to mate with the body seat.

E. Valve Connections: Flanged valves shall be drilled in compliance with ANSI B16.1, Class 125. Mechanical joint valves shall comply with AWWA C111. Threaded valves shall have NPT full size inlets with hexagonal wrench connection.

F. Valve Bearings: Plug valves shall be furnished with permanently lubricated sleeve type bearings conforming to AWWA C504. Bearings shall be of sintered, oil impregnated type 316 stainless steel ASTM A743 Grade CF-8M or bronze ASTM B127.

G. Valve Shaft Seals: Valve shaft seals shall be of the “U” cup type, in accordance with AWWA C504. Seals shall be self-adjusting and repackable without removing the bonnet from the valve.

H. Valve Actuators: Valves 2.5” and smaller shall be provided with a hand lever. Valves 3” and larger shall be specified as equipped with either a handwheel or 2” square nut for direct quarter-turn operation.

1. Where specified, a totally enclosed and sealed worm gear actuator with position indicator and externally adjustable open and closed stops shall also be included. The worm segment gear shall be ASTM A536 Grade 65-45-12 ductile iron with precision bore and keyway for connection to the valve shaft. All buried valves shall be provided with worm and gear actuators suited for the intended service. All gear actuators shall be designed to withstand, without damage, a rim pull of 200 lbs for handwheels and an input torque of 300 ft-lbs for nuts.

2. Buried service actuators shall be packed with grease and sealed for temporary submergences to 20 feet of water. Exposed worm shafts shall be stainless steel.

I. Electric Actuators: When specified, electric actuators shall be in accordance with Section 40 05 57 – Actuators for Process Valves and Gates.

2.02 Manufacturers, or ENGINEER-approved equal:

A. VAL-MATIC

B. PRATT

C. DeZurik

D. ENGINEER-approved equal

PART 3 – EXECUTION

3.01 GENERAL

A. Valves shall be installed in accordance with these Specifications and Manufacturer’s instructions.

END OF SECTION

SECTION 40 0563 – BALL VALVES

PART 1 – GENERAL

1.01 THE REQUIREMENT

A. Provide ball valves and appurtenances, complete and operable, in accordance with the Contract Documents.

B. American Iron and Steel (AIS) requirement applies to this Section. All iron and steel products used in this project must be produced in the United States.

1.02 SUBMITTALS

A. Furnish submittals in accordance with Section 01 3300 – Submittal Procedures.

PART 2 – PRODUCTS

2.01 GENERAL

A. The ball valve type and its actuator shall be as indicated in the contract documents. All actuators shall be in accordance with these Specifications.

2.02 BALL VALVES (3- TO 12-INCH)

A. Construction: Ball valves shall be full bore with a design working pressure of 150 psig. Valve construction shall conform to the following:
   1. Top Flange shall be design for direct mounting of actuator and gear operators. Top flange shall provide easy access for adjustment of gland bolts. Design shall conform to EN ISO 5211.
   2. Valve Design shall conform to ASME B16.34-2004/ API 6D / BS EN ISO 17292 Class 150.
   3. Valve end-to-end dimensions shall be per ASME b16.10 / API 6D.
   4. Valve Body shall be flanged, two-piece design in cast construction and shall be coated with two-coat zinc-rich epoxy paint.
   5. Ball shall be floating design, stainless steel with superior finish and sphericity to ensure extended seat life and low operating torque.
   6. Stem shall be stainless steel, heavy duty construction with double “D” (sizes up to 4”) and round and keyed (sizes 6” and greater) configurations.
   7. Seat shall be contoured and be reinforced with PTFE seat.
   8. Body joint bolting shall conform to ASTM A193 B7/ ASTM A194 2H for carbon steel bodies and ASTM A193 GR.B8/ ASTM A194 GR.8 for stainless steel bodies.
   9. Actuators: Unless otherwise indicated, ball valves shall have manual hand lever or wheel actuators.

B. Manufacturers, or ENGINEER-approved equal:
   1. Apollo
   2. Nibco
   3. Valtorc

2.03 BALL VALVES (SMALLER THAN 3-INCH)

A. Construction: Ball valves, smaller than 3-inch, for general purpose use, shall be heavy-duty type for industrial service, with butt weld, grooved, threaded, or soldered ends to match the piping. The bodies shall be cast red bronze conforming to ASTM B584. The ball and threaded pack gland shall be brass with a reinforced PTFE seat ring. The stem shall be of silicon bronze. All valves shall have a pressure rating of minimum 125 psi steam, and 200 psi cold water, unless otherwise indicated.

B. Construction (Thermoplastic Ball Valves): PVC and CPVC ball valves, smaller than 3-inch, for general purpose use, shall be heavy-duty type for industrial service, with butt socket, threaded, or flanged ends to match the piping. The ball valves shall be true union type constructed from PVC Type I, ASTM D1784, or CPVC Type IV, ASTM D1784. All O-rings shall be EPDM or Viton. All ½" to 2" valves shall be pressure rated at 235 psi and all 2-1/2" to 3" valves shall be pressure rated at 150 psi, unless otherwise indicated.

C. Manufacturers, or ENGINEER-approved equal:
   1. Hayward
   2. Apollo
   3. Asahi
   4. Spears

2.04 CURB STOP BALL VALVES

A. Construction: Curb stop ball valves smaller than 3-inch shall be shall be heavy-duty type for industrial service, with butt socket, threaded, or flanged ends to match the piping. If Curb Stop ball valve is connecting to plastic piping, stainless steel insert stiffeners are required. Curb stop ball valve to be made of heavy cast bronze body, end piece to be epoxied into body. A fluorocarbon coated brass ball to eliminate corrosion and electrolysis associated with common plug type curb stops. Curb stops shall be 90-degree rotation for open/close, one-piece cap and stem, double Buna-N Stem O-rings to assure permanent water seal at top. Curb stop ball valves shall be designed and manufactured to conform to AWWA Standard C800-89 (ASTM B62-Index 115-85-5-5-5). Valves shall be individually inspected and tested by the manufacture for leaks by air pressure under water.

B. Manufactures, or ENGINEER-approved equal:
   1. Ford
   2. Mueller Company
   3. Legend

PART 3 – EXECUTION

3.01 GENERAL

A. Ball valves shall be installed in accordance with the provisions of these Specifications. Care shall be taken that valves in plastic lines are well supported at each end of the valve.

END OF SECTION

SECTION 40 0564 – BUTTERFLY VALVES

PART 1 - GENERAL

1.01 THE REQUIREMENT

A. Provide butterfly valves and appurtenances, (air and water service) complete and operable, in accordance with the Contract Documents.

B. American Iron and Steel (AIS) requirement applies to this Section. All iron and steel products used in this project must be produced in the United States.

1.02 SUBMITTALS

A. Furnish submittals in accordance with Section 01 3300 – Submittal Procedures.

B. Complete Shop Drawings

C. Drawings of butterfly valves and actuators.

D. Drawings showing valve port diameter complete with dimensions, part numbers and materials of construction.

1.03 QUALITY ASSURANCE

A. Valves shall be subjected to performance, leakage, and hydrostatic tests in accordance with procedures and acceptance criteria established by AWWA C504.

PART 2 - PRODUCTS

2.01 RESILIENT SEATED BUTTERFLY VALVES

A. General: Butterfly valves steady-state water working pressures and steady-state differential pressure shall be as indicated on the plans.

B. Valves shall be of the body type, pressure class, end joint, and actuator type indicated on Contract Drawings.

C. Construction: Unless otherwise indicated, all materials of construction shall be suitable for the service, whether water or air. The seats shall be positively clamped or bonded into the disc or body of the valve.

Description	Material Standards (may differ for service application – water/air)
Valve Bodies	Cast Iron ASTM A126 Class B
Valve Stem	Stainless Steel 416
Valve discs	Aluminum or Bronze
Painting and coating	Refer to applicable Sections of Division 09 – Finishes

D. Manufacturers, or ENGINEER-approved equal:
1. Val-Matic
2. Keystone
3. Pratt

2.02 BURIED SERVICE BUTTERFLY VALVE

A. General: All butterfly valves shall be manufactured in accordance with the latest revision of AWWA C504 for Class 150B service. Valves in sizes 3-24” shall have 304 stainless steel trim as standard.

B. Valve body shall be constructed of cast iron ASTM A126 Class B and conform to AWWA C504 in terms of laying lengths and minimum body shell thickness. End connections shall be as specified on the plans.

C. Valve disc shall also be made from cast iron ASTM A126 Class B in sizes 20" and smaller. Sizes 24" and larger shall be built from ductile iron in conformance to ASTM A536. Disc shall be furnished with Type 316 stainless steel seating edge to mate with the rubber seat on the body.

D. Valve seat shall be Buna-N rubber located on the valve body. In sizes 20" and smaller, valves shall have bonded seats that meet test procedures outlined in ASTM D429 Method B. Sizes 24" and larger shall be retained in the valve body by mechanical means without use of metal retainers or other devices located in the flow stream.

E. The shaft shall be Type 304 stainless steel conforming to ASTM A276. Shaft seals shall be standard self-adjusting split V packing. Shaft seals shall be of a design allowing replacement without removing the valve shaft.

F. Bearings shall be sleeve type that is corrosion resistant and self-lubricating.

G. Actuators shall be fully grease packed and have stops in the open/close position. The actuator shall have a mechanical stop which will withstand an input torque of 450 ft. lbs. against the stop. The traveling nut shall engage alignment grooves in the housing. The actuators shall have a built-in packing leak bypass to eliminate possible packing leakage into the actuator housing.

H. The Valve Interior and Exterior Surfaces except for seating shall be coated with Ameron Amerlock 370 in accordance with AWWA C550 and C504. All internal and/or external surfaces shall be covered with a polyamide cured epoxy coating applied over a sand blasted “new white metal surface" per SSPC-SP10 to a minimum of 6 mils in compliance with AWWA C550.

I. Manufacturers, or ENGINEER-approved equal:
   1. Val-Matic
   2. Pratt

PART 3 - EXECUTION

3.01 INSTALLATION

A. All exposed butterfly valves shall be installed with a means of removing the complete valve assembly without dismantling the valve or operator. The installation shall be in accordance with these Specifications.

END OF SECTION

SECTION 40 0565 – CHECK VALVES

PART 1 - GENERAL

1.01 THE REQUIREMENT

A. Provide check valves and appurtenances, complete and operable, in accordance with the Contract Documents.

B. American Iron and Steel (AIS) requirement applies to this Section. All iron and steel products used in this project must be produced in the United States.

1.02 SUBMITTALS

A. Furnish submittals in accordance with Section 01 3300 – Submittal Procedures.

PART 2 - PRODUCTS

2.01 SWING CHECK VALVES (3-INCH AND LARGER)

A. General: Swing check valves for water and wastewater service shall be a full body flange type, with a domed access cover and resilient disc. The valves shall meet ANSI/AWWA C 508 - Swing-Check Valves for Waterworks Service, 3 in. through 24 in. NPS, unless otherwise indicated, and shall be with full-opening passages and designed for a water-working pressure of 250 psi. Check valves shall be fully operational in both the vertical and horizontal installation position.

B. Body: The valve body and cover shall be of cast iron conforming to ASTM A536 Grade 65-45-12 with flow area equal to the nominal pipe inside diameter throughout the valve. Seat shall be constructed on a 45-degree angle to reduce disc travel. The seat and internal body shall be fully coated with a two part thermosetting epoxy suitable for use in both potable water and wastewater applications.

C. Disc: The resilient disc shall be of one-piece construction, precision molded with an integral O-ring type seal surface and contain alloy steel and nylon reinforcement in the flexible hinge area. For pressure application 50 psig or greater, the resilient disc shall be a fully encapsulated steel pressure plate with integral molded O-ring on the face of the elastomer. Nylon reinforcements shall be provided in the flexible hinge area of the disc assembly.

D. Backflow Actuator: Check valves shall be provided with a screw-type backflow actuator to allow for the opening of the valve during no flow conditions. The backflow shall be a rising-stem type to indicate position. A stainless-steel T-handle shall be provided for ease of operations.

E. Position Indicator: Check valves shall be provided with a mechanical position indicator to indicate disc position.

F. Disc Accelerator Mechanism: Check valve shall be provided with a disc accelerator mechanism to assist in the rapid closure of the disc to minimize flow reversal. Accelerator mechanism shall be required in high head application of 50 psig or greater. Accelerator mechanism shall be a spring type, weighted type, or hinge type.

G. Valve manufacturer shall be Val-Matic, VSI, Pratt or ENGINEER-approved equal.

2.02 SWING CHECK VALVES (2-1/2-INCH AND SMALLER)

A. General: Swing check valves for steam, water, oil, or gas in sizes 2-1/2-inch and smaller shall be suitable for a steam pressure of 150 psi and a cold water pressure of 300 psi. They shall have screwed ends, unless otherwise indicated, and screwed caps.

B. Body: The valve body and cap shall be of bronze conforming to ASTM B61 - Steam or Valve Bronze Castings, or ASTM B62 with threaded ends conforming to ANSI/ASME B1.20.1 - Pipe Threads, General Purpose (inch).

C. Disc: Valves for steam service shall have bronze or brass discs conforming to ASTM B16 – Free-Cutting Brass Rod, Bar, and Shapes for Use in Screw Machines, and for cold water, oil, and gas service replaceable composition discs.

D. Hinge Pin: The hinge pins shall be of bronze or stainless steel.

E. Position Indicator: Valves shall be provided with mechanical position (open/closed) indicators.

F. Valve manufacturer shall be as shown on the Drawings or ENGINEER-approved equal.

2.03 DOUBLE DISC CHECK VALVE

A. General: Check valve shall be of the double disc, wafer style with torsion spring induced closure. Valve shall be Wafer style for bolting between ANSI Class 125 flanges. Valves have a Ductile Iron body (ASTM A536 65-45-12) to fit inside 125# ANSI bolt circles, a two-piece Stainless-Steel disc (ASTM type 304), type 304 Stainless Steel dual shafts, ASTM A313, type 304 Stainless Steel torsion spring and have an integrally molded elastomer seat vulcanized to the body. Valve for horizontal flow shall be installed with the shafts in vertical position.

B. Valve manufacturer shall be Valmatic, Pratt or ENGINEER-approved equal.

2.04 GLOBE STYLE CHECK VALVE

A. General: Check valve shall be of the silent operating type and the same size as the entering pipe. Globe style thru 24 inches shall be rated 250PSI WOG, have a Ductile Iron body (ASTM A536 65-45-12), 125# ANSI Flat Face Flanges, ASTM A313 Type 304 Stainless Steel helical or conical spring, a Stainless Steel (ASTM type 304) seat and dual guided disc (top and bottom), 304 Stainless Steel guide bushing and type 304 Stainless Steel guide pins. Check valve to have a minimum open area in the body of 110% of the area of the entering or corresponding pipe. Valve is to operate silently in either vertical or horizontal positions, flow up or down.

B. Valve manufacturer shall be Valmatic, Pratt or ENGINEER-approved equal.

2.05 WAFER SILENT CHECK VALVE

A. General: Check valve shall be of the silent wafer type and the same size as the entering pipe. Valves shall be the compact wafer style and have a pressure and temperature rating equal to or greater than the pipeline in which they are installed. Compact wafer-silent style check valves thru 12 inches shall be rated for 250PSI WOG for installation between ANSI Class 125 or Class 250 flanges, have a Ductile Iron body (ASTM A536 65-45-12), ASTM A313, Type 304 Stainless Steel helical or conical spring, a Stainless-Steel guide bushing and type 304 Stainless Steel guide pins. Valves are to operate silently in either vertical or horizontal positions, flow up or down.

B. Valve manufacturer shall be Val-Matic, Pratt, or ENGINEER-approved equal.

2.06 TILTING DISC CHECK VALVE

A. General: The tilting disc check valve shall consist of a circular disc with conical rim, hinged about a fixed pivot above its center-line and offset from the plane of the seat, sealing against a body seat clamped between the two sections of the valve body.

B. Body: The body shall be two-piece, consisting of an entrance and a discharge section bolted together at an angle with the pipeline. An O-ring seal in a groove between the body flanges shall be in place to prevent leakage between the flanges when bolted together. The valve shall be complete with ANSI class flanges to mate with adjacent equipment.

C. Disc and Seat: A body seat shall be clamped in place in a slot between the two body sections. The body seat shall have a conical finish to mate with the disc seat. There shall be an inspection port provided in both the entrance and discharge sections to provide visual access both upstream and downstream of the disc. An indicator shall be provided to show disc position for the full range of travel. Bosses shall be cast in both the entrance and discharge sections to allow for a top mounted oil dashpot for controlled opening and closing. All valve castings shall be ductile iron ASTM A536 Grade 65-45-12. The disc and body seat ring shall be Bronze B62. The hinge-pin shall be stainless steel ASTM A276 Type 304. The bearing sleeve shall be Bronze B62. Coating shall be NSF61 approved epoxy.

D. Backflow Actuator: If required, check valves shall be provided with a screw-type backflow actuator to allow for the opening of the valve during no flow conditions. The backflow shall be a rising-stem type to indicate position. A stainless-steel T-handle shall be provided for ease of operations.

E. Position Indicator: Check valves shall be provided with a mechanical position indicator to indicate disc position.

F. Valve manufacturer shall be Val-Matic, Pratt or ENGINEER-approved equal.

2.07 RUBBER FLEX DUCKBILL CHECK VALVE

A. General: Check valves are to be metal backed, rubber flanged for attaching directly to flanged-end connections. The check valve shall be made of Buna-N elastomer material. CONTRACTOR to verify the valve ID size and flange drilling dimensions.

B. Valve manufacture shall be Cla-Val, or ENGINEER-approved equal.

PART 3 - EXECUTION

3.01 GENERAL

A. Valves shall be installed in accordance with provisions of these Specifications.

END OF SECTION

SECTION 40 0567 – SPECIALIZED PRESSURE AND FLOW-CONTROL VALVES

PART 1 - GENERAL

1.01 THE REQUIREMENT

A. Provide all miscellaneous valves and appurtenances, complete and operable, in accordance with the Contract Documents.

B. American Iron and Steel (AIS) requirement applies to this Section. All iron and steel products used in this project must be produced in the United States.

1.02 SUBMITTALS

A. Furnish submittals in accordance with Section 01 3300 – Submittal Procedures.

1.03 OPERATION AND MAINTENANCE MANUAL

A. Provide two (2) hard copies plus one (1) electronic version in PDF format.

B. Operation and Maintenance Manual shall be furnished in accordance with these Specifications.

1.04 QUALITY ASSURANCE

A. Manufacturer and model shall be described on the Drawings or ENGINEER-approved equal.

B. The manufacturer shall provide a 2-year equipment warranty.

1.05 SPARE PARTS

A. Spares shall be as requested by the ENGINEER. Payment for spares shall be made in accordance with these Specifications and the Contract Documents.

B. A list of spare parts for each piece of equipment shall be obtained from the manufacturer and submitted at the same time as Shop Drawings. The name, address, and telephone number of the nearest distributor for each piece of equipment shall be furnished.

PART 2 - PRODUCTS

2.01 AIR-VACUUM AND AIR-RELEASE VALVES

A. Air and Vacuum Valves: Air and vacuum valves shall be capable of venting large quantities of air while pipelines are being filled, and allowing air to re-enter while pipelines are being drained. They shall be of the size indicated, with flanged or screwed ends to match piping. Bodies shall be of high-strength cast iron. The float, seat, and all moving parts shall be constructed of Type 316 stainless steel. Seat washers and gaskets shall be of a material insuring water tightness with a minimum of maintenance. Valves shall be designed for minimum 150 psi water-working pressure, unless otherwise indicated.

B. Air-Release Valves: Air-release valves shall vent accumulating air while system is in service and under pressure and be of the size indicated and shall meet the same general requirements as indicated for air and vacuum valves except that the vacuum feature will not be required. Valves shall be designed for a minimum water-working pressure of 150 psi, unless otherwise indicated.

C. Combination Air Valves: Combination air valves shall combine the characteristics of air and vacuum valves and air release valves by exhausting accumulated air in systems under pressure and releasing or re-admitting large quantities of air while a system is being

filled or drained, respectively. Valves shall have the same general requirements as indicated for air and vacuum valves.

D. Valves shall be manufactured by ARI, or ENGINEER-approved equal, and designed for a minimum water-working pressure of 150 psi, unless otherwise indicated.

E. ARV valves shall be protected with a lockable cover. The cover shall be provided with air vents and a drain port. The cover shall be easily removed by the operator for maintenance purposes.

2.02 PRESSURE RELIEF/PRESSURE SUSTAINING VALVES

A. Quality Assurance: The valve manufacturer shall warrant the valve to be free of defects in material and workmanship for a period of three years from date of shipment, provided the valve is installed and used in accordance with all applicable instructions. Electrical components shall have a one year warranty. Valves shall be subjected to performance, leakage, and hydrostatic tests in accordance with procedures and acceptance criteria established by AWWA C504

B. General: The pressure relief/sustaining valve shall maintain a constant upstream and/or downstream pressure regardless of changing flow rate and/or inlet pressure.

C. Main Valve: The valve shall be hydraulically operated, single diaphragm-actuated, globe pattern. The valve shall consist of three major components: the body, cover, and diaphragm assembly. The diaphragm shall be the only moving part and shall form a sealed chamber in the upper portion of the valve, separating operating pressure from line pressure. Packing glands and/or stuffing boxes are not permitted and there shall be no pistons operating the main valve or pilot controls.

D. Body: Valve body shall be ductile iron construction. Valve body shall be cast as one piece. No fabrication or welding shall be used in manufacturing.

E. Disc: The valve shall contain a resilient, synthetic rubber disc, with a rectangular cross-section contained on three and one-half sides by a disc retainer and forming a tight seal against a single removable seat insert. No O-ring type discs (circular, square, or quad type) shall be permitted as the seating surface. The disc guide shall be of the contoured type to permit smooth transition of flow and shall hold the disc firmly in place. The disc retainer shall be of a sturdy one-piece design capable of withstanding opening and closing shocks. It must have straight edge sides and a radius at the top edge to prevent excessive diaphragm wear as the diaphragm flexes across this surface. No hourglass-shaped disc retainers shall be permitted and no V-type or slotted type disc guides shall be used.

F. Diaphragm: The diaphragm assembly containing a non-magnetic 303 stainless steel stem with sufficient diameter to withstand high hydraulic pressures shall be fully guided at both ends by a bearing in the valve cover and an integral bearing in the valve seat. No center guides shall be permitted. The stem shall be drilled and tapped in the cover end to receive and affix such accessories as may be deemed necessary. The diaphragm assembly shall be the only moving part and shall form a sealed chamber in the upper portion of the valve, separating operating pressure from line pressure.

G. The flexible, non-wicking, FDA approved diaphragm shall consist of nylon fabric bonded with synthetic rubber compatible with the operating fluid. The center hole for the main valve stem must be sealed by the vulcanized process or a rubber grommet sealing the center stem hole from the operating pressure. The diaphragm must withstand a Mullins Burst Test of a minimum of 600 psi per layer of nylon fabric and shall be cycle tested 100,000 times to insure longevity. The diaphragm shall not be used as the seating surface. The diaphragm shall be fully supported in the valve body and cover by machined surfaces

which support no less than one-half of the total surface area of the diaphragm in either the fully opened or fully closed position.

H. Seat & Stem: The main valve seat and the stem bearing in the valve cover shall be removable. The lower bearing of the valve stem shall be contained concentrically within the seat and shall be exposed to the flow on all sides to avoid deposits. To insure proper alignment of the valve stem, the valve body and cover shall be machined with a locating lip. No “pinned” covers to the valve body shall be permitted. Cover bearing, disc retainer, and seat shall be made of the same material. All necessary repairs and/or modifications other than replacement of the main valve body shall be possible without removing the valve from the pipeline. Packing glands and/or stuffing boxes shall not be permitted and components including cast material shall be of North American manufacture.

I. Pilot System: Pilot tubing shall be 316 S.S. construction. The pressure relief pilot control shall be a direct-acting, adjustable, spring-loaded, normally open, diaphragm valve designed to permit flow when controlled pressure is less than the spring setting. The pilot control is held open by the force of the compression on the spring above the diaphragm, and it closes when the delivery pressure acting on the underside of the diaphragm exceeds the spring setting. The pilot control system shall include a fixed orifice. No variable orifices shall be permitted. The pilot system shall include an opening speed control on all valves. The pilot control shall have a second downstream sensing port which can be utilized to install a pressure gauge. A full range of spring settings shall be available in ranges of 20 to 200 psi.

J. Remote Sensing: Valves used for pressure relief or unloading functions in a bypass arrangement shall be provided with a remote pilot sensing. The pilot system shall provide a digital output via flow switch when the valve is actuated.

K. The valve manufacturer shall also provide a computerized cavitation chart which show flow rate, differential pressure, percentage of valve opening, Cv factor, system velocity, and if there will be cavitation damage.

L. Valve manufacturers shall be CLA-VAL, Singer, Wilkens, or ENGINEER-approved equal.

PART 3 - EXECUTION

3.01 INSTALLATION

A. Valves shall be installed in accordance with the manufacturer's printed recommendations, and with provisions of these Specifications.

END OF SECTION

SECTION 40 0573 – MISCELLANEOUS PROCESS VALVES

PART 1 - GENERAL

1.01 THE REQUIREMENT

A. Provide all miscellaneous valves and appurtenances, complete and operable, in accordance with the Contract Documents.

1.02 SUBMITTALS

A. Furnish submittals in accordance with Section 01300 - Submittals.

1.03 OPERATION AND MAINTENANCE MANUAL

A. Provide six (6) hard copies plus one (1) electronic version in PDF format.

1.04 QUALITY ASSURANCE

A. Manufacturer and model shall be described on the Drawings, as specified herein, or Engineer approved equal.

B. The manufacturer shall provide a 2-year equipment warranty.

1.05 SPARE PARTS

A. Spares shall be as requested by the ENGINEER. Payment for spares shall be made in accordance with the General Conditions.

B. A list of spare parts for each piece of equipment shall be obtained from the manufacturer and submitted at the same time as Shop Drawings. The name, address, and telephone number of the nearest distributor for each piece of equipment shall be furnished.

PART 2 - PRODUCTS

2.01 FLOAT VALVES (2-INCHES OR SMALLER)

A. General**:** This valve is heavy duty mechanical float valve for controlling high capacity water flow.

B. The valves have bronze body construction with machine flanges on the inlet side (sizes 1” to 2” (25 to 50mm) have female NPT pipe threaded inlet connections), and male straight-pipe threaded for locknut on the outlet side. The connectors have serrated arms for easy adjustment of water level, bronze long and short arms, replaceable seals, and no-jam single lever action.

C. Maximum working pressure shall be 165 psi. Maximum working temperature shall be 180° F.

D. Valve shall be equipped with brass float stem and plastic float designed to work with the valve. Stem shall be of sufficient length for proper operation of the valve and to maintain the required level in the storage reservoir. Floats shall be injection molded polyethylene construction.

E. Float Valves shall be Watts or approved equal.

2.02 FOOT VALVES

A. Foot Valves shall be of the type designed to provide silent operation, positive sealing, and full flow area.

B. Valves shall be flanged, 125 lb., ANSI standard and of the center-guided, poppet-type, having a linear stroke to provide silent operation. Guide shafts and bushings shall be of the same material as the seat and disc, i.e., bronze, or stainless steel. The Buna-N seal shall be so designed to provide an initial contact of bronze to Buna-N with final contact being metal to metal to prevent destruction of the Buna-N seal ring.

C. Flow area thru the valve, including valve stroke, shall be equal to pipe size.

D. Valve inlet shall be provided with stainless steel screening. The screening should in no way reduce the full flow area of the valve. The screening shall be in the shape of a basket with the bottom also screened.

E. Standard construction to be cast iron body, bronze trim with stainless steel basket screening.

F. Valves shall be manufactured by:
   1. Val-Matic
   2. ENGINEER-approved equal.

2.03 MUD VALVES

A. The Mud Valve shall be of the heavy duty flanged type designed to provide a positive seal under both seating and unseating head conditions. The valves shall be rising stem style as detailed on the schedule or the plans. The frame, plug and yoke shall be cast iron (A126B) The valve operating stem and lift nut shall be bronze (B421) The seat ring shall be bronze (B62) with an accurately machined tapered seating face. The plug seat shall be a seamless molded, tapered resilient ring of BUNA-N designed to accurately mate with the seat ring for a positive seal.

B. Where required the manufacturer shall provide valve operating stems, Floor Stands and Stem Guides as specified in the valve schedule or plans.

C. The Mud Valves are to be coated using TNEMEC Pota Pox two-part epoxy, NSF approved coating.

D. Valves shall be manufactured by:
   1. Troy Valve, Waterman
   2. ENGINEER-approved equal.

2.04 BACKFLOW PREVENTER

A. General**:** Backflow preventers shall be a pressure type or reduced pressure type backflow preventer unit and associated components shall be equal in quality and performance to a “Foundation for Cross-Connection Control and Hydraulic Research”. Backflow preventers shall be Febco, Watts, Wilkins or ENGINEER-approved equal – Standard Orientation and include a fiberglass enclosure per Hot Box, appropriately sized for the backflow preventer. Enclosures shall protect against freezing down to 0°F. All backflow preventers shall be submitted for approval by the Town regardless of make or model.

2.05 TELESCOPING VALVE

A. General**:** Furnish and install manually-operated telescoping valves, complete and operable, as shown and specified, including appurtenances, operators, supports and accessories, in accordance with the requirements of the Contract Documents.

B. Valve Assembly**:** The telescoping valve assembly shall be of the rack and pinion type, of the size shown. The travel range shall be at least the amount shown. Assemblies shall consist of a handwheel pedestal (with offset if required) with handwheel operator, a rising stem, slip tube with flat weir crest skimming funnels, a tube guide collar with companion flange and gasket and a mounting bracket.

1. Slip Tube: The slip tube and skimming funnel shall be of Type 316, Schedule 40 stainless steel, with a seal to prevent leakage at the seam.
2. Stem: The stem shall be minimum ¾-inch, Type 316 stainless steel, with a travel and height indicating device calibrated in 1-inch increments. A suitable stem lock shall be provided for holding the stem at the desired level.
3. Guide Collar: Guide collar shall include a neoprene gasket and cast iron companion flange for securing to the receiving pipe as shown.
4. Mounting Bracket: A cast iron bracket shall be provided for mounting the operator pedestal with stainless steel anchor bolts.
5. Fastening Hardware: All nuts and bolts and other fastening hardware shall be Type 316 stainless steel.
6. Coating: Coating of all ferrous surfaces, except stainless steel, shall be in accordance with these Specifications.

C. Valve shall be Troy Valve, Waterman or ENGINEER-approved equal.

PART 3 - EXECUTION

3.01 INSTALLATION

A. Valves shall be installed in accordance with the manufacturer's printed recommendations, and with provisions of these Specifications.

END OF SECTION

SECTION 40 0597 – IDENTIFICATION FOR PROCESS PIPING

PART 1 - GENERAL

1.01 THE REQUIREMENT

A. The CONTRACTOR shall furnish, paint, mark, and paint/install identification devices for all exposed piping and piping in accessible chases and areas above ceilings with panels, and valves using, lettering, flow direction arrows, and related permanent identification devices, and all appurtenant works, in accordance with the requirements of the Contract Documents.

1.02 REFERENCE SPECIFICATIONS, CODES AND STANDARDS

A. Comply with the reference specifications of the General Requirements.

B. OCSD TAGGING PROCEDURE

1.03 CONTRACTOR SUBMITTALS

A. Submittals shall be made in accordance with Section 01 3300 – Submittal Procedures.

B. The CONTRACTOR shall submit samples of all types of identification devices to be used in the work.

C. QUALITY ASSURANCE (NOT USED)

PART 2 - PRODUCTS

2.01 IDENTIFICATION OF PIPING

A. All exposed piping and piping in accessible chases and areas above ceilings with panels, including stainless steel, galvanized steel, copper, CPVC, and Fiberglass RTR piping, shall be completely and totally painted for identification purposes. Piping all be identified with lettering or tags designating the service of each piping system, shall have flow directional arrows. All piping scheduled to be color-coded shall be completely painted or coated with the colors indicated in the schedule below.

B. Each pipe identification shall consist of color-coding in accordance with Subsection 3.04 IDENTIFICATION SCHEDULE, a painted label, and a directional flow arrow. Piping identification shall be located in accordance with Subsection 3.03 PIPE IDENTIFICATION LOCATION.

C. For cases where there are insulated lines wrapped with aluminum sheathing, stainless steel sheathing, or gray fabric, the background color shall be applied to a 24-inch length of pipe section and color band centered within the 24 inch field of background color.

D. Paint Colors: Paint colors shall conform to the following designations:

Color	**Mgf./No.**
Paper White	DuPont 40P-1031
	Tnemec F075-WH01A
	Dunn Edwards IP630-SY-1
Dark Brown	DuPont 40P-1039
	Tnemec F075-D2526A
	Dunn Edwards IP630-SY-25
Safety Red	DuPont 333-23664
	Tnemec F075-S1170A
	Dunn Edwards IP630-SY-19

Safety Orange	DuPont 40P-1030 Tnemec F075- S1169A Dunn Edwards IP630- VD9222
Light Gray	DuPont 333-23662 Tnemec F075- A2606A Dunn Edwards IP630- RL7422
Caribbean Blue	DuPont 40P-1048 Tnemec F075-B2478A Dunn Edwards IP630-UD10264
Safety Blue	DuPont 40P-1048 Tnemec F075-B2477A Dunn Edwards IP630-VD10265
Spectra Master (Dark Blue)	DuPont 40P-1496 Tnemec F075-B2476A Dunn Edwards IP630-SY-23
Custom Formula (Purple)	DuPont 40P-1628 Tnemec F075-R1217A Dunn Edwards IP630-SY-13
Cool Green	DuPont 40P-1008 Tnemec F075-S1168A Dunn Edwards IP630-UL9585
Safety Yellow	DuPont 333-23663 Tnemec F075-S1167A Dunn Edwards IP630-UD9223

E. Lettering

1. Identification labels and directional arrows shall be painted directly on piping using stencils or makers.
2. Pipe identification markers shall be vinyl or polyester construction with an adhesive strip, coiled to wrap completely around the pipe (no straps) and have subsurface printing. Pipe less than six inches shall have lettering to meet ANSI A13.1 standards.
3. The size of the letters for identification labels shall be as follows:

PIPE OUTSIDE DIAMETER*	LETTER SIZE
5/8” to 1 1/4”	1/2” high
1 1/2” to 3”	1” high
Over 3”	2” high

*Outside pipe diameter shall include insulation and jacketing.

4. Identification markers shall have letters, directional arrows and colors as follows:

Plant Water	Black Letters on Yellow Field
Industrial Water	Black Letters on Yellow Field
Potable Water	White Letters on Green Field
Reclaimed Water	Black Letters on Yellow Field
Fire Protection Water	White Letters on Red Field
High Pressure Air	White Letters on Blue Field
Instrument Air	White Letters on Blue Field
Sludge	Black Letters on Yellow Field
Steam	Black Letters on Yellow Field
Drain	Black Letters on Yellow Field
Acid	Black Letters on Yellow Field

Caustic Solution	Black Letters on Yellow Field
Polymer	Black Letters on Yellow Field
Ferric Chloride	Black Letters on Yellow Field
Sodium Hypochlorite	Black Letters on Yellow Field
Hydrogen Peroxide	Black Letters on Yellow Field
Digester Gas	Black Letters on Yellow Field
Natural Gas	Black Letters on Yellow Field
Electrical	Per Specification Division 26

PART 3 - EXECUTION

3.01 GENERAL

A. All labels shall be installed in accordance with the manufacturer's printed instructions, and shall be neat and uniform in appearance. All such tags or labels shall be readily visible from all normal working locations.

3.02 VALVE TAGS

A. Valve tags shall be permanently attached to the valve or structure as specified in the OCSD TAGGING PROCEDURES.

B. The wording on the valve tags shall describe the exact function of each valve, e.g., "HWR-BALANCING," "CLS THROTTLING", "RAS-PUMP SHUT-OFF," etc.

3.03 PIPE IDENTIFICATION LOCATION

A. Straight lines of pipe shall be identified at intervals of 20 feet maximum, and at least once in each room unless otherwise directed by the ENGINEER.

B. Piping shall also be identified at a point approximately within 2 feet of all turns, ells, valves, and the upstream side of all distribution fittings or branches and on both sides of each floor, wall, or barrier through which the line passes.

3.04 IDENTIFICATION SCHEDULE

A. Application of identifying devices shall conform to the following color codes, or match existing color code as directed by the ENGINEER.

MATERIAL IN PIPE	**COLOR**
Potable Water (RP Device)	Caribbean Blue
Fresh Water (Air Gap)	Caribbean Blue
Industrial and/or Cooling Water	
LPE	Purple (Custom Formula)
MPE	Purple (Custom Formula)
HPE	Purple (Custom Formula)
HPE (continuously chlorinated)	Purple (Custom Formula)
Fire Water	Caribbean Blue
Industrial Water	Dark Blue
Cooling Water Supply-Plant Effluent	Safety Blue
Cooling Water Return-Plant Effluent	Safety Blue
Cooling Water Return-Industrial Water	Dark Blue
Cooling Water Supply-Industrial Water	Dark Blue
Reclaimed Water	Purple (Custom Formula)
Final Effluent	Safety Blue
Irrigation (continuously chlorinated eff.)	Purple (Custom Formula)

Chemical Supply Lines (Extremely Dangerous)	
Chlorine (gas or liquid)	Cool Green
Chlorine Solution	Cool Green
Sodium Hydroxide	Cool Green
Chlorinator Vent and Detection Lines	Cool Green
Hydrazine	Cool Green
Lime Slurry	Cool Green
Sodium Hypochlorite	Cool Green
Ferric Chloride	Cool Green
Ferrous Chloride	Cool Green
Phosphoric Acid	Cool Green
Concentrated Sulfuric Acid	Cool Green
Dilute Sulfuric Acid	Cool Green
Chemical Draw and Vent	Cool Green
Dilute Acid	Cool Green

Chemical Supply Lines	
Polymer-Anionic	Cool Green
-Cationic	Cool Green
-Nonionic	Cool Green
-Dist.	Cool Green
-Effluent	Cool Green
Chemical Draw and Vent	Cool Green
Sulfite/Bisulfite Scrubbing Liquid	Cool Green
Stratford Solution (Scrubbing Liquor)	Cool Green

Sludge/Ash Transport and Process Lines	
Blended Sludge	Light Gray
Bottom Sludge	Light Gray
Centrate (from digested sludge dewatering)	Light Gray
Centrate (H_2S Scrubbing)	Light Gray
Circulated Sludge	Light Gray
Digested Sludge	Light Gray
Sulfur Slurry (H_2S Scrubber)	Light Gray
Filtrate	Light Gray
Raw Sludge	Light Gray
Screened Digested Sludge	Light Gray
Activated Sludge	Light Gray
Digester Cleanings	Light Gray
Digested Sludge to Screenings	Light Gray
Digested Sludge to Blending Tanks	Light Gray
Digested Sludge Recirculated/Transfer	Light Gray
Digested Sludge Withdrawal	Light Gray
Thickened Waste Activated Sludge	Light Gray
Return Activated Sludge	Light Gray
Thickener Subnatant	Light Gray
Thickener Subnatant Overflow	Light Gray
Cyclone Effluent	Light Gray
Grit	Light Gray
Mixed Liquor	Light Gray
Thickener Pressurized Recycle	Light Gray
Scum	Light Gray

Sludge/Ash Transport and Process Lines	
Ash (hydraulic)	Light Gray
Processed Condensate	Safety Blue
Process Effluent	Safety Blue
Final Clarifier Influent	Safety Blue

Pneumatic Transport Lines	
Sludge Derived Fuel	Cool Green
Hot Ash	Cool Green
Sand Transport	Cool Green

Air and Vacuum Supply Lines	
Oxygen (gaseous)	Cool Green
Oxygen (liquid)	Cool Green
Combustion Air	Paper White
Compressed Air (non-instrument)	Paper White
Instrument Air	Paper White
Process Air	Paper White
Product Air	Paper White
Foul Air	Paper White
Nitrogen (liquid)	Cool Green
Nitrogen (gaseous)	Cool Green
Vacuum	Paper White
Vent Duct	Paper White

Boiler Waters	
Boiler Feedwater Makeup	Caribbean Blue
Boiler Feedwater	Caribbean Blue
Continuous Blow-down	Dark Blue
Demineralized Water	Dark Blue
H. P. Condensate	Dark Blue
L. P. Condensate	Dark Blue
M. P. Condensate	Dark Blue
Intermittent Blow-down	Dark Blue
Softened Water	Dark Blue
Reverse Osmosis Treated Water (permeate)	Purple (Custom Formula)

Steam	
L. P. Steam	Safety Red
M. P. Steam	Safety Red
H. P. Steam	Safety Red

Lube and Hydraulic Oils	
Hydraulic Oil Supply	Safety Yellow
Hydraulic Oil Return	Safety Yellow
Lube Oil	Safety Yellow
Drain Oil	Safety Yellow
Oil Vapor	Safety Yellow
Grease	Safety Yellow
Defoamant-Sludge Blending Tanks (Kerosene)	Safety Yellow

Fuel Supply	
Natural Gas/LNG/Propane	Safety Yellow
Digester Gas: LP, MP, and HP	Safety Yellow
Diesel	Safety Yellow

Lab	
Distilled Water	Dark Blue
Salt Water	Dark Blue

Miscellaneous	
Equipment Vent	same as equipment
Sample Line	same as line or equipment being sampled
Spare Chemical	same as chemical

Sanitary Sewer/Storm Drains	
Roof Drain	Dark Brown or same color as bldg. walls
Plant Drain	Dark Brown
Storm Drain	Dark Brown
Sump Pump Discharge	Dark Brown
Sanitary Sewer	Dark Brown
Sanitary Vent	Dark Brown
Influent Raw Sewage (up to primary tanks)	Light Grey
Demineralized Waste	Dark Brown
Reverse Osmosis Reject	Dark Brown

END OF SECTION

SECTION 40 4200 – PROCESS PIPING AND EQUIPMENT INSULATION

PART 1 - GENERAL

1.01 THE REQUIREMENT

A. The CONTRACTOR shall furnish and install all pipe and equipment insulation, complete and operable, in accordance with the requirements of the Contract Documents. In addition to the insulation shown and specified, the CONTRACTOR shall insulate any cold or hot piping and exhausts that could be subject to freezing or hazardous to plant personnel upon contact.

B. All steam and hot or chilled water piping shall be insulated with fiberglass metal jacketed insulation to form a watertight and weatherproof system.

C. Exposed process piping shall be heat taped and insulation against freezing as shown per the Contract Documents.

D. All air process piping within the blower building which passes through spaces above finished ceilings, or are suspended over equipment, electrical panels, or cabinets shall be insulated. Refer to the plans for insulation locations and requirements for air process piping.

E. All unions, flanges, mechanical joints, valves, strainers, steam traps, and other devices in insulated piping systems shall be insulated in the same manner as the adjacent piping. Operators, instruments, and other features requiring routine access shall not be covered. Insulation over removable devices shall be easily removable and replaceable.

F. Insulation on any buried piping need not be jacketed.

1.02 REFERENCE SPECIFICATIONS, CODES AND STANDARDS

A. Comply with the reference specifications of the General Requirements.

B. Comply with the current provisions of the following Codes and Standards.

1. Federal Specifications:
    a. HH-1-558B Insulation Blocks, Boards, Blankets, Felts, Sleeving (Pipe and Tube Covering), and Pipe Fitting Covering, Thermal (Mineral Fiber, Industrial Type)
2. Commercial Standards:
    a. ASTM C547 Specification for Mineral Fiber Preformed Pipe Insulation
    b. ASTM E84 Test Method for Surface Burning Characteristics of Building Materials

1.03 SUBMITTALS

A. Shop Drawings: Shop drawings shall be submitted in accordance with Section 01 3300 – Submittal Procedures.

1. The following submittals and specific information shall be provided.
    a. The CONTRACTOR shall submit complete shop drawings showing locations of placement of all thermal insulation, with manufacturer's data on materials, covering, jackets, and finish.

PART 2 - PRODUCTS

2.01 INSULATION

A. All components of the insulation, including covering, mastics and adhesives shall have a flame-spread rating of not over 25, and a smoke development rating of not over 50. Ratings shall be as established by tests in accordance with ASTM E84 and Federal Specification standards. The integrated insulation assemblies shall also conform to the above specifications. Insulation shall be applied in strict accordance with the manufacturer's instructions.

B. MATERIALS

1. Standard Insulation: This type of insulation shall be employed for process, cold-and hot water, steam, and condensate piping and equipment with surface temperatures up to 850 degrees F. Pipe insulation shall be molded-type pipe covering, made of fibrous glass with a minimum k-factor of 0.23 at 75 degrees F mean temperature. The insulation shall be oversized for installation over electric heating cable. Unless otherwise specified the insulation thickness shall be as follows:

   Pipe Insulation:

	Minimum Thickness of Insulation (Inches)
Hot and cold water (domestic)	
6 inches and smaller	1
Hot and chilled water process	
6 inches and smaller	1-1/2
8 inches and larger	2
Low pressure steam (50 psi and less)	
8 inches and less	2
Condensate, boiler blowdown, and boiler feed	
8 inches and less	1-1/2
Heated sludge and process piping	
6 inches and smaller	1
8 inches and larger	1-1/2
Heat traced piping	
3 inches and smaller	1
4 inches and larger	1-1/2
EQUIPMENT AND TANKS	
Boilers, heaters, and manufactured equipment	As recommended by manufacturer
Heat exchangers, tanks, and vessels	3
Blower Discharge, blow-off, and motor exhaust lines	3

2. Vapor barrier: Insulation shall have a factory-applied white fire-retardant vapor-barrier jacket of kraft paper and aluminum foil laminated together and reinforced with fiberglass yarn.
3. Insulation at Supports: Insulation shall be coordinated with the pipe hangers and supports and where insulation protection shields are provided the top half section of pipe insulation at support locations shall be of the same specified density, and the bottom half insulation segments provided between the pipe and the insulation protection shields shall have a density of not less than 6 lb./cu ft.

C. Manufacturers, or ENGINEER-approved Equal:

1. Johns Manville, Micro-Lok HP
2. Owens Corning, Fiberglas SSL II with ECOSE

3. CertainTeed, InsulPure

D. High Temperature Insulation: This type of insulation shall be employed for engine exhaust pipes, flues, and similar pipes and equipment with surface temperatures up to 1200°F. The high temperature insulation shall consist of 4-inch thick calcium silicate or similar pre-molded blocks with a minimum k-factor of 0.14, in two layers of 2-inch thickness, each, with staggered joints, all applied over a 3/4-inch high metal rib lath. The inner layer shall be suitable for 1200°F, and the second layer for 1000°F. All bends, voids, joints, fittings, and other parts of the piping system shall be filled with insulating cement. Aluminum lagging with preformed aluminum fittings shall be banded to the insulation in a similar fashion as specified for standard insulation. Allowance shall be made for thermal expansion.

E. Metal Jacketing
1. General: All insulation shall be covered with smooth aluminum weatherproof jacketing with a factory-attached moisture barrier.
2. The jacket for the fittings shall consist of precision-formed smooth-sided sections and shall be sized to cover and protect the insulated fitting. Each section shall be manufactured from aluminum, and all joints shall be sealed with silicon mastic, to provide a continuous, air and weathertight joint. Strapping shall be 1/2-inch wide, Type 3003 aluminum or Type 304 stainless steel.
3. The jacket at insulated valves shall fit over the removable insulation and be easily removed and re-installed. It shall be held in place by adjustable stainless-steel hose clamps.
4. Metal jacketing shall be 0.016-inch thick, smooth finish aluminum sheet conforming to ASTM B209, alloy 5005, temper H16, with integral vapor barrier. Sheet metal screws shall be aluminum or stainless steel. Jackets shall be secured with 0.020 by ¾-inch Type 304 stainless steel expansion bands.

2.02 HEAT CABLE

A. Heating cable shall be self-regulating through the use of a thermostat for freeze protection. Heating cable shall be applicable to the type of pipe material being protected.

B. Heating cable shall utilize 120VAC and provide heating power of minimum of 5 watt/ft @ 50°F.

PART 3 - EXECUTION

3.01 INSTALLATION

A. All insulation and heat cables shall be installed by a qualified insulation CONTRACTOR in strict accordance with the manufacturer's recommendations and the requirements of these specifications.

B. Insulation shall be installed over heat cable where required.

C. Piping shall be tested and shall be approved by the ENGINEER prior to insulation installation.

D. All end joints of insulation shall be tightly butted.

E. All seams and joints shall be held by manufacturer's standard adhesive.

F. Jacket laps shall be neatly pasted in place.

G. All joints shall be pointed with insulating cement.

H. Fittings and valves shall be covered with the same material as the pipe, cut in segments to fit snugly without open spaces, held in place with copper wire or cement, and then covered with the same jacketing material as the pipe.

I. Insulation at valves and other devices shall be formed into two halves, easily removable for valve maintenance. The halves shall be constructed from segments cemented together to fit the valve and to extend over the adjacent piping insulation.

Insulated fittings adjacent to vapor-barrier insulation shall be sealed with acceptable vapor-barrier cement before installation of the finish jacket.

J. Pipe insulation and vapor-barrier shall be continuous through hangers and supports. Hangers shall permit insulation to pass through. Suitable saddles shall be provided to prevent the weight of the piping from being supported by the insulation.

END OF SECTION

SECTION 40 6113 – INSTRUMENTATION AND CONTROL FOR PROCESS SYSTEMS

PART 1 - GENERAL

1.01 REQUIREMENT

A. This Section includes the general requirements for furnishing and installing the Instrumentation, Control and Monitoring equipment as indicated on the Drawings and in these Specifications. Other instrumentation and control Sections of this Division shall supplement this Section as necessary.

B. The intent of the instrumentation and control Sections of these Specifications is to require that all instrumentation as indicated, specified, and/or required, shall be furnished by a single competent, qualified Instrumentation and Control Integrator (hereinafter referred to as the I&C INTEGRATOR) to assure system compatibility and coordination with all other subsystems.

C. Labor, materials, apparatus, and components essential to the complete functioning of systems described and indicated herein, or which may be reasonably implied as essential, whether mentioned in the Contract Documents or not, shall be furnished and installed by the I&C INTEGRATOR. In case of doubt as to the work intended, or in the event of need for explanation thereof the I&C INTEGRATOR shall refer to the ENGINEER for supplemental instructions.

D. All items not specifically mentioned in these specifications or noted on the Drawings, or on shop drawings, but which are necessary to make a complete and satisfactory, working electrical/instrumentation installation, shall be deemed to be included herein. The Construction Documents are not intended to show every fitting, junction, or component nor every difficulty that may be encountered during installation or coordination with different equipment manufacturers. The I&C INTEGRATOR shall refer to related data in all Contract Documents and shall verify this information on site.

E. Unless otherwise indicated, all equipment and components shall' be rated for use in the environment installed. Outdoor equipment shall be weatherproof or rated for outdoor use. Equipment installed in corrosive areas shall be rated for that environment. Equipment installed in a hazardous area shall be explosion-proof. In case of doubt as to the area classification, or need for explanation thereof, or discrepancies noted between components specified and the environment installed the I&C INTEGRATOR shall refer to the ENGINEER for supplemental instructions.

1.02 REFERENCES

A. The specifications reference known standards and codes. Each such standard referenced shall be considered a part of the Specifications to the same extent as if reproduced therein in full. The following is a representative list of such Associations, Institutes and Societies, together with the acronym by which each is identified.

1. AIEE American Institute of Electrical ENGINEERs
2. ANSI American National Standards Institute
3. ASTM American Society for Testing and Materials
4. ICEA Insulated Cable ENGINEERs Association
5. IEEE Institute of Electrical and Electronics ENGINEERs
6. NEC National Electrical Code (2002)
7. NEMA National Electrical Manufacturers Association
8. NETA National Electrical Testing Association
9. NFPA National Fire Protection Association
10. UL Underwriter's Laboratories, Inc.

B. Every reference in the Specifications shall mean the latest printed edition of each in effect at the Contract date or latest edition as adopted by the local governing authority.

1.03 SUBMITTALS

A. Submittals shall be furnished in accordance with Sections 01 3300 – Submittal Procedures.
   1. Where applicable, provide complete manufacturer's part number, identifying scaling, operating range, housing, and wetted parts materials, NEMA rating, product options, consumable materials, and other pertinent information.
   2. Prior to Final Acceptance of the work, the I&C INTEGRATOR shall provide Operations and Maintenance Manuals, in accordance with the Contract Documents.
   3. Descriptive Data: Submit copies of complete descriptive literature, performance data, physical dimensions, power and signal connections for each component and equipment to be furnished. Provide name of manufacturer, style, and complete model number. Listing items "as specified" without both make and model or type designation is not acceptable.
   4. Component Data Sheets: Submit a component data sheet for each piece of instrumentation equipment similar to an ISA S20 form. Include equipment tag number, manufacturer's model number, location of service, materials of construction, size and scale range, calibrated range, setpoints, optional accessories and any other useful information.
   5. Important Notice:
      a. After material or equipment has been submitted and approved, no substitutions will be allowed.
      b. If I&C INTEGRATOR's submittal(s) depart from the Contract Documents, the I&C INTEGRATOR shall make specific mention thereof in his letter(s) of transmittal, otherwise review of such submittals by the ENGINEER shall not constitute review of such departure(s).
      c. The I&C INTEGRATOR may be charged for costs incurred by the ENGINEER for third and subsequent submittal reviews. Cost for ENGINEER's review time shall be billed at the ENGINEER's standard hourly rates.
   6. Control System Drawings: Submit 11" X 17" detailed shop drawings indicating dimensions, component layout, mounting details, wiring diagrams, nameplate legends and bill of materials for each control panel.
      a. Wiring diagrams shall include all interconnections, inter-wiring, and terminals between all electrical and/or instrumentation units. Wire numbers shall be continuous from start to finish. Wire numbers shall not change when going from one unit, cabinet, enclosure, terminal, or any device to another.
      b. Discrete control and power circuits: Submit ladder diagrams indicating all panel devices related to discrete functions mounted in or on control panel.
      c. Show unique rung numbers on left side of each rung. Label each wire, coil, and terminal block. Show individual component terminal numbers.
      d. Analog signals: Indicate the entire analog loop on the wiring diagram including all devices connected in series and location of each device. Indicate loop power supplies and individual component terminal numbers. Indicate wire and terminal numbers of each device in the loop.
      e. Use different symbols for terminal blocks located in different pieces of equipment. Label each terminal block and wire termination point.
      f. Show each PLC I/O point rack, slot, terminal number, and PLC configured address on each drawing.

7. Submit a complete PLC I/O listing including instrument tag numbers and descriptions. The I/O list shall contain the PLC rack, slot, terminal number, and PLC address. Submit a complete PLC program database cross-reference list linking each database and internal register with its associated I/O point(s).

1.04 QUALITY ASSURANCE

A. Equipment to be furnished under this Section shall be the product of firms regularly engaged in the design and manufacture of this type of equipment. Manufacturer shall assume responsibility for, and guarantee performance of equipment furnished. However, this shall not be construed as relieving the I&C INTEGRATOR from responsibility for the proper installation and functioning of the work.

B. The manufacture shall provide a 2-year equipment warranty.

C. The I&C INTEGRATOR must have a minimum of three (3) years' experience as a system integrator, panel fabricator and instrumentation supplier for other projects of similar type, size, and requirements. The I&C INTEGRATOR must submit documentation from his selected panel fabricator verifying the experience and UL 508A file number.

D. All equipment furnished shall be new and of current design. Like equipment shall be of the same manufacturer.

1.05 SYSTEM RESPONSIBILITY

A. The I&C INTEGRATOR shall have total responsibility for the work as specified in the instrumentation and control specifications of this Division. This includes but is not necessarily limited to furnishing system components, system integration and design, wiring diagrams, loop drawings, programming, installation supervision, field instrument calibration, start-up, testing and operator training.

B. The Prior to start of work, the I&C INTEGRATOR shall verify all existing field conditions. This includes creating as-built plans and documentation of all required field wiring, I/O, loop drawings, etc. as needed. Any conflict with design documents shall be brought up to the ENGINEER.

C. The I&C INTEGRATOR is a Subcontractor. Therefore, references made to the responsibilities and requirements of the CONTRACTOR shall only mean that the responsibilities and requirements pass through the CONTRACTOR and that the final responsibility for all Control and Instrumentation systems rests with the I&C INTEGRATOR.

1.06 OPERATING AND MAINTENANCE MANUALS

A. Operating and Maintenance Manuals (O&M): The I&C INTEGRATOR shall provide O&M manuals for equipment and materials furnished under this contract. Submit number of copies as specified in these specifications (min. 4). Assemble data in a single complete indexed volume and identify the size, model, and features indicated for each item. Equipment O&M manuals shall include the following information as a minimum:
   1. A neatly typewritten index near the front of the manual furnishing immediate information as to the location in the manual of emergency data regarding installation.
   2. Installation requirements and procedures.
   3. Complete instructions regarding the operation and maintenance of equipment involved. Instructions and documentation not related to the equipment furnished must be removed or crossed out. O&M manuals must be individually tailored to the project and equipment as furnished.
   4. Bill of Materials, component data sheets, descriptive literature, product specification sheets, wiring diagrams and calibration procedures. O&M manuals must be individually tailored to the project and equipment as furnished.

5. Complete nomenclature of replaceable parts, part numbers, current cost, name, and address of nearest vendor of replacement parts. Information on equipment or components not related to equipment furnished must be removed or crossed out. O&M manuals must be individually tailored to the project and equipment as furnished
6. Copy of warranties issued on the installation, showing dates of expiration.
7. Provide a copy of all instrument calibration reports.

B. Operator interface/PLC cross-reference table/interface list. The cross-reference list shall include all PLC registers linked to each operator interface display feature. The list shall include the operator interface tag, PLC address, I/O type, and range of analog signals in engineering units.

C. Four (4) copies of the final PLC programs on 8-1/2" x 11" paper and two (2) copies on CDROM after final acceptance of the project. The electronic copies shall be a complete set of fully documented programming files as used by the I&C INTEGRATOR in programming all PLCs. The programs (including electronic copies provided) shall be well documented with control descriptions.

D. Two (2) digital copies of all final operator interface configuration files after final acceptance of the project.

1.07 RECORD DRAWINGS

A. Record Drawings: Upon completion of work, I&C INTEGRATOR shall furnish a complete set of Record Drawings and Shop Drawings which properly reflect final tested system, loop diagrams, PLC programs, etc., as actually installed. Drawings shall accurately record the final constructed system and shall be labeled as "RECORD".

1.08 COORDINATION

A. The I&C INTEGRATOR shall coordinate with all other equipment manufacturers to avoid conflicts and interferences. No extra compensation will be allowed for changes made necessary due to conflicts between various equipment.

B. Any discrepancies noted in these contract documents or discrepancies between Drawings and actual field conditions shall be promptly brought to the ENGINEER for a decision. No extra compensation will be allowed for changes made by the I&C INTEGRATOR without ENGINEER's consent.

C. The I&C INTEGRATOR shall be responsible for coordination of control panel fabrication, testing and instrumentation system installation with configuration of both PLCs and operator interfaces. Project completion will not be granted to the I&C INTEGRATOR until programming and configuration has been completed and complete automatic operation has been tested.

1.09 WARRANTY

A. In addition to specific warranties required by the Specifications, the I&C INTEGRATOR shall leave the entire installation in complete working order and free from defects in materials, workmanship, or finish. I&C INTEGRATOR shall repair or replace at his own expense any part that may develop defects due to faulty material or workmanship during the tests and within a period of one year (minimum, or as indicated elsewhere) after substantial completion acceptance. The I&C INTEGRATOR shall repair or replace existing equipment and work that is damaged during the repair of defective apparatus, materials, or workmanship at no cost to the OWNER.

B. All manufacturers’ warranties shall be filled out in their entirety by the I&C INTEGRATOR for the OWNER using the OWNER's name and address. Equipment warranty periods will commence on date of final acceptance.

PART 2 - PRODUCTS

2.01 STANDARD EQUIPMENT

A. Furnish and install equipment of the type specified which has been proven to operate successfully. Material or equipment that has been specified or called out by manufacturer and/or model number is approved by the ENGINEER. All other equipment may be selected based on equal quality and performance. If the I&C INTEGRATOR wishes to use an alternate manufacturer to that indicated on the plans or specified herein, the I&C INTEGRATOR shall submit to the ENGINEER for approval, along with a written request stating the reason(s) for the substitution. The ENGINEER and the OWNER shall review such requests and have final approval prior to purchase or installation. The I&C INTEGRATOR shall be responsible for the design and installation requirements with no additional charge/fee to the OWNER.

B. All control panel components shall be UL recognized and ground fault protected per UL 508A fabrication standards. Each control panel assembly shall bear a serialized UL 508A label.

C. All instrumentation equipment and control panel components shall be capable of operating successfully at full-rated load, without failure, at an ambient air temperature of 50°C, and specifically rated for the altitude in which the equipment will be placed in service. If equipment cannot operate under the specified conditions or excessive heat build-up is expected to exceed component rating, the I&C INTEGRATOR shall supply heat mitigation measures to reduce the operating temperature within the control space to that specified by the manufacturer.

D. Instrument tubing shall be soft annealed, ASTM B280 copper with soldered connections. Tubing bends shall be made with a tubing bender. Tubing shall be run straight, vertical, or horizontal and secured with straps or clamps.

PART 3 - EXECUTION

3.01 FACTORY ACCEPTANCE TEST

A. Prior to final acceptance of the work, the I&C INTEGRATOR shall certify the equipment and installation included under this Section to be free of defects, and suitable for trouble-free operation under the conditions set forth in these specifications. This requirement is in addition to the manufacture's guarantee.

B. Before delivering any control panels to the site, the I&C INTEGRATOR shall notify the ENGINEER in writing at least two weeks prior so that a factory acceptance test can be performed. The test shall be conducted only after the I&C INTEGRATOR has performed his testing, calibrations, and check-out of the system.

C. The PLC and operator interface programs shall be thoroughly tested. Each input and output signal shall be tested for proper indication and control function. The PLC control logic will be tested by using simulated inputs and tripping interlocks.

D. The factory acceptance test shall be conducted by the I&C INTEGRATOR. The test shall be witnessed by the ENGINEER.

E. A successful factory acceptance test only allows the I&C INTEGRATOR to ship the system to the site. It does not constitute final acceptance by the OWNER.

3.02 INSTALLATION

A. Equipment and materials specified in this Section shall be installed and connected as specified, and as shown on the Plans. The I&C INTEGRATOR shall coordinate the installation with the other trades, to insure proper installation of the control instrument, components and associated conduit and cables.

B. The I&C INTEGRATOR shall calibrate the instruments to the proper ranges, as required by the OWNER and the ENGINEER. Where analog signals are connected to local or remote monitoring equipment, the I&C INTEGRATOR shall verify that the calibrated ranges and scaling of the local and remote indicators are correct.

C. The I&C INTEGRATOR shall furnish the services of instrumentation technicians or control system engineers trained and experienced in the installation of the various instrument and control equipment being supplied. These services shall be utilized by the I&C INTEGRATOR as he deems necessary to supervise installation, calibrate, troubleshoot, and put equipment into service.

3.03 INSTRUMENT CALIBRATION

A. The I&C INTEGRATOR shall provide the services of a factory representative with the proper tools and equipment to properly calibrate and adjust each instrument in the field. The ENGINEER shall be notified when the factory representative will be onsite to witness instrumentation calibration and setup. This site visit by the factory representative may also be utilized for the OWNER designated operator training as required below.

B. Each instrument shall be tested with certified test instruments simulating inputs at 0, 25, 50, 75 and 100 percent of the calibrated range. Ten (10) data points shall be recorded by ascending to 100 percent than descending back to O. Data shall be recorded on a prepared Instrument Calibration Report with the following information:

1. Instrument description
2. Type and location of service
3. Manufacturer, model, and serial number of instrument
4. Scale range and engineering units
5. Testing method and description
6. Input values or settings
7. Output values (recorded data)
8. Calibrations notes or explanations
9. Technician's name, date, and signature
10. Copy of the test instrument calibration report. Testing instrument must have been calibrated within one year prior to calibration date.

3.04 FINAL ACCEPTANCE

A. Upon completion of instrument calibration and system validation, all systems to be retested under process conditions. The OWNER, ENGINEER, and I&C INTEGRATOR shall perform this test as a final acceptance test for each instrument or piece of equipment. The process variables will be pushed to their limit to verify accuracy, alarms, and interlocks. Any defects or problems will be corrected immediately. Once all testing has been completed to the OWNER's satisfaction, the I&C INTEGRATOR shall submit a certified report with all substantiating data sheets indicating that the total instrumentation and control system meets the functional intent of the Contract Documents.

B. After installation of the system and checkout by the OWNER, ENGINEER and I&C INTEGRATOR, a performance test shall be performed per these Specifications. The test shall include an operational demonstration during which the system shall run continuously without loss of basic functions. The operational demonstration shall confirm that the status, alarm, and process variable signals are valid and are being updated appropriately. If additional time or tests are need due to improper function of the control system, the I&C INTEGRATOR shall perform the necessary work at no cost/fee to the OWNER.

3.05 SPARE PARTS

A. Provide the OWNER with a list of the manufacturers' recommended spare parts.

END OF SECTION

SECTION 40 6196 – PROCESS CONTROL DESCRIPTIONS

PART 1 - GENERAL

1.01 THE REQUIREMENT

A. This Section includes the general system overview and description of logic for each piece of equipment being controlled by the Filtration Control Panel. Other Sections shall supplement this Section as necessary.

B. The intent of this Section is to provide guidance to the CONTRACTOR and to the Contractor's I&C INTEGRATOR in the programmable logic function for various I/O signals indicated on the Drawings. The control and monitoring functions described herein cover the basic logic to be performed with each I/O signal. These control descriptions are not intended to cover every possible scenario or describe every possible timer, interlock, safety shutdown, etc. that may be necessary for a complete operational system. The primary function of these control descriptions is to provide the I&C INTEGRATOR with information that cannot be indicated in electrical schematic diagrams. A brief description of signals to be provided to/from packaged control panels has also been provided herein. It is also the intent of this Section to list the minimum control, monitoring and alarm functions to be displayed on the PLC and SCADA screens.

C. An attempt has been made on the Drawings and in these Specifications to describe system logic and functionality as well as show signals, interlocks, and devices necessary for proper operation of the control and monitoring systems. However, if a particular signal, device, sensor, interposing control relay, signal converter, control logic, interlock (hardware or software), etc., is required to meet the intent or operational requirements and is not indicated, the I&C INTEGRATOR shall furnish and install this piece of equipment with no extra compensation.

D. All alarm conditions shall be maintained until manually reset and/or acknowledged unless otherwise indicated herein or on the Drawings.

E. The I&C CONTRACTOR shall be fully responsible for the proper operation of all control equipment and documentation of all modifications made to programs at project completion.

PART 2 - PRODUCTS (NOT USED)

PART 3 - EXECUTION

3.01 OPERATOR INTERFACE CONFIGURATION (HMI)

A. The I&C CONTRACTOR shall be responsible for developing a minimum of three (3) operator interface screens to display and control I/O as indicated on the Drawings and as described herein. The displays shall be reviewed during the submittal stage. A brief written description of each graphic screen shall be provided to the Engineer for review prior to the I&C CONTRACTOR beginning screen development or the graphic display portion of the submittals. The Engineer will review the operator interface screens again during the submittal review stage and yet again during startup and system demonstration. If minor modifications are deemed necessary or requested by the Engineer or Owner during startup, the I&C CONTRACTOR shall make the modifications at no additional cost.

B. The operator interface shall be configured to depict the current system operational status through a hierarchical system of graphical schematic displays. These displays shall revolve around a water treatment plant overview screen with labels of each process area or graphic screen that can be accessed from the overview screen. Touching a process area or label shall open the corresponding process area screen. The process area screens

shall contain a graphical representation of the process selected. The graphical representation can be similar to what is indicated on the P&ID Drawings or in another format acceptable to the Engineer. The I&C CONTRACTOR is encouraged to use his/her imagination to add quality to the graphic displays. Each process area shall be divided into smaller process units with a separate screen created for each process unit if necessary to properly display all information. Each I/O point shown on the P&ID drawings shall be shown on at least one process screen.

C. Each process display shall have symbols and indicators necessary to show all the detail data associated with that piece of equipment. Detail data displayed shall be as indicated on the P&ID Drawings or as described herein.

D. The date and time shall be displayed on each operator interface screen.

E. Equipment RUN indication shall be displayed in green. An elapsed time meter shall be provided for all motors and shall be displayed on the screen next to each motor. The elapsed time meters shall be adjustable by double-clicking on it to bring up a box that can be edited. When a motor or piece of equipment is OFF and not in alarm, it shall be displayed in gray.

F. Alarms shall remain hidden until they become active which will turn the component dark and flash until acknowledged. When the alarm has been acknowledged, the component at fault will stop flashing but remain dark until the alarm condition has been corrected. When an alarm condition occurs, an alarm box shall appear on every screen notifying the operator of an alarm condition. Once the alarm condition has been acknowledged, the alarm box shall disappear. A separate alarm screen shall be provided to indicate the alarm description along with the date and time of the alarm. A graphical pushbutton control station shall be provided on the operator interface for alarm acknowledgement. When the “alarm acknowledge” pushbutton is touched, the alarm displayed shall stop flashing and the alarm screen shall indicate the time and date the alarm was acknowledged.

G. Control features from the operator interface such as Start, Stop or Reset shall have the appearance of an actual pushbutton control station. For example, when a Reset button is touched on the operator interface screen, the button shall take on the appearance of being depressed.

H. A report screen shall be generated that indicates the elapsed time for all motors on this project. The elapsed time for each motor shall continue to increment whenever a run signal from the motor is received. The value on the report screen shall reflect the value indicated on the graphic screens. The elapsed time report screen shall be printable through the printer port.

3.02 ALARMS

A. Alarms will be categorized into three alarm levels as follows:
   1. Level 3 alarms will be displayed on the operator interface. The alarm will remain displayed on each operator interface until the operator acknowledges and resets the alarm at the operator interface.
   2. Level 2 alarms will also be displayed on the operator interface, but will activate an external alarm horn & beacon after a 10-minute time delay. The alarm will remain activated until the operator acknowledges and resets the alarm at an operator interface.
   3. Level 1 alarms will be displayed on the operator interface, activate the external alarm horn/beacon, after 10 minutes and initiate an auto dialer to call offsite operators. The alarm will remain activated until the operator acknowledges and resets the alarm at an operator interface. The auto dialer can be reset from a touch-tone telephone.

3.03 PLC PROGRAMMING & CONFIGURATION

A. Controls and monitoring for the WWTP will consist of the following main components:
   1. SBR PLC
   2. Drying Bed Lift Station Control Panel
   3. Overflow Lift Station Control Panel
   4. Headworks Control Panel
   5. Dewatering Control Panel

B. These components will be networked to allow both local and remote control of automated processes. The local control panels will allow the operator to control only the specific local process, including process monitoring, set point adjustments, and alarm acknowledgements.

C. General System Description: Wastewater is delivered to the WWTP inlet through a 12-inch sewer main and 48-inch metering manhole. Influent from the metering manhole is moved by gravity through the headworks and screening equipment. Headworks is comprised of 1+1 climber-type bar screens. After screening, influent is deposited in either Aeration Basin 1 or Aeration Basin 2 for secondary treatment. The two treatment basins will fill and treat alternately such that while one basin is treating, the other is filling. The treatment cycle for the Aerations basins are comprised of Anoxic Fill, React Fill, React, Settle. After the settling period, treated supernatant will be decanted using a floating mechanical decanter and transferred to the Post-EQ Surge Basin, where the effluent will be held before discharge into the chlorine contact channel. In the chlorine contact channel, effluent will be treated using a chlorine tablet feeder and de-chlorinated with a second tablet feeder prior to discharge into Bitter Creek. After decanting is complete, sludge will be wasted from the aeration basin and sent to dewatering process areas. Dewatering will be provided primarily by a sludge bagging system. The bagging system will be supplemented by two sludge drying beds as a backup method. Filtrate recovered from the dewatering areas will be directed to a lift station, located near the sludge drying beds, which returns the filtrate to the WWTP headworks. During high flow events, overflow from the process basins will also be delivered to the drying bed lift station. If the drying bed lift station reaches capacity, it will drain to three equalization basins located at the bottom of the ravine. The equalization basins discharge into a second, overflow lift station which returns overflow to the drying bed lift station after the high flow event ends.

D. SBR PLC: The SBR PLC will be the primary control panel for the SBR treatment system and will monitor other process areas throughout the plant. The SBR control panel will be provided and programmed by the SBR Manufacturer and at a minimum will provide the following:
   1. SBR treatment operation
   2. Monitors the flow into the SBR process area
   3. Monitors and controls the SBR headworks
   4. Monitors and the SBR treatment cycles
   5. Monitor water levels in the process basins
   6. Monitors drying bed and overflow lift stations
   7. Monitors Standby Generator
   8. Monitors flow rate to chlorine contact channel

Alarms

a. SBR Alarm Conditions (Per SBR Manufacturer)
b. Sludge Pump Fail
c. Mixer Fail
d. Influent Valve Fail
e. Decant Valve Fail
f. Post-EQ Valve Fail
g. Blower System Alarm

Control and Monitor Display at SBR PLC:

a. SBR Phases: Fill, React, Settle, Decant
b. Influent Control Valves (Open/Close) (Manual/Auto)
c. Submersible Mixers (On/Off/Auto)
d. Decanters (On/Off)
e. Decanter Discharge Valves (Open/Close) (Manual/Auto)
f. Sludge Pumps (On/Off/Auto)
g. SBR Level – 0-14.5 feet
h. Blower (In/Out of Service)
i. Blower Operation (Manual, DO, Speed)
j. Blower Filter Differential Pressure – 0-1 psi
k. Blower Inlet/Outlet Temperature
l. Blower Speed – 0-100,000 RPM
m. Blower Air Flow – 0-1,000 SCFM
n. Blower Run Time
o. Blower Operating Mode (Current—Flow—RPM—Pressure—DO)

Signals to SBR PLC

a. Drying Bed Lift Station Alarms
b. Overflow Lift Station Alarms

E. Drying Bed Lift Station Control Panel: The lift station will return water to the head of the treatment plant. The system shall operate based on the water level in the lift station and shall control the start and stop of two (2) grinder pumps. The grinder pumps shall start and stop automatically based on the integral controls. The Drying Bed Lift Station Control Panel shall provide status monitoring back to the SBR Control Panel.

Setpoints for Drying Bed Lift Station Control Panel PLC:

a. Pump #1 ON High Alarm level – 4 feet
b. Pump #2 ON High High Alarm level – 5 feet
c. Pump #1 OFF Low Alarm Level – 1 foot
d. Pump #2 OFF Low Alarm Level – 4 foot
e. High Alarm level Discharge Pressure (adjustable set point 0-100 psi) – 75psi

Control and Monitor Display

a. Pump #1 On/Off/Auto (Lead/Lag/Standby)
b. Pump #2 On/Off/Auto (Lead/Lag/Standby)
c. Lift Station Water Level (ft)

Alarms

a. High Alarm Water Level
b. High High Alarm Water Level
c. High Alarm level Discharge Pressure
d. Pump Fail

F. Overflow Lift Station Control Panel: The overflow lift station will return water from the equalization basins to the Drying Bed Lift Station using a single grinder pump. The overflow lift station shall be manually operated by the Operator. The Overflow Lift Station Control Panel shall relay alarms to the SBR Control Panel to signal the Operator to manually start or stop the overflow lift station pumps. Automatic operation is not acceptable to prevent short-circuiting the Drying Bed Lift Station.

G. Generator: A new 125 KW standby diesel generator provides back-up power for the Water Filtration System. The CONTRACTOR shall verify and make the necessary electrical modifications required for the generator to run when the Automatic Transfer Switch senses a loss of prime power to the facility. The I&C INTEGRATOR shall program the FCP to exercise the generator once a week for an operator-input time interval (default 30 minutes). When sensing a loss of prime power, the FCP shall allow a time delay in the facility process programming for the generator to come on without initiating shutdown of the treatment process or equipment.

Control and Monitor Display at SBR Control Panel:

a. Generator (Running/ Off/ Auto) Applicable Sections of Division
b. Automatic Transfer Switch (Prime Power/ Emergency Power)

Alarms:

a. Low Fuel Alarm
b. Fail Alarm

END OF SECTION

SECTION 40 6653 – RADIO COMMUNICATION EQUIPMENT

PART 1 – GENERAL

1.01 THE REQUIREMENT

A. This section covers the furnishing and installation of radio communication equipment for receiving remote signal information for communication with the Supervisory Control and Data Acquisition (SCADA) system. This includes equipment that is common to the computer system and the field interface devices. The equipment shall consist of the following principal items, as indicated on the Drawings and as required to complete the system.
   1. Yagi Radio Antenna
   2. Radio
   3. Surge Protection
   4. Interconnecting Cables

1.02 SUBMITTALS

A. Submittals shall be furnished in accordance with Sections 01 3300 – Submittal Procedures.

1.03 OPERATION AND MAINTENANCE MANUAL

A. Provide six (6) hard copies plus one (1) electronic version in PDF format.

B. Operation and Maintenance Manual shall be furnished in accordance with these Specifications.

1.04 QUALITY ASSURANCE

A. Each manufacturer shall provide a 2-year warranty.

PART 2 – PRODUCTS

2.01 ACCEPTABLE MANUFACTURERS

A. Radio manufacturers shall be compatible with the existing WWTP's radio network and shall be MDS iNetII Ethernet Radio, or ENGINEER-approved equal.

B. Antenna manufacturers shall be Antenna Specialists, Laird, Kathrein Scala, or ENGINEER-approved equal.

C. Surge protector shall be Polyphaser IS-50NX Series, or ENGINEER-approved equal.

2.02 RADIO/ REPEATER

A. The radio unit shall meet the following:

(Table on next page)

Characteristic	Specification / Description
Frequency Range	902 – 928 MHz (FHSS/FCC DTS)
Modulation	2 level GFSK
Output Power	5 mW to 1 W
Receive Sensitivity	-108 dBm, at standard speed, $1x10^{-6}$ BER -104 dBm, at high speed, $1x10^{-6}$ BER
Range	40 miles LOS
Frequency Zones	16 zones, 7-8 channels per zone
Serial Interface	(2) RS232/RS422/RS485, programmable RJ-45 connectors

Ethernet Interface	802.3, IPv4, TCP, UDP, DHCP, ICMP, ARP, Multicast, TFTP, DNP3 over TCP (2) 802.3u, Fast Ethernet, RJ-45
Power	Transmit: Outdoor – 6.6 W Receive: 1.8W Idle: 0.8 W
Power Requirement Voltage	+6 VDC to +30 VDC
Temperature Range	-40^0C to 75^0C
Antenna Connector	Board Level: SMA, Female Enclosed: TNC, Male
Size	Board Level: 178x88x32 (mm), 227 g Enclosed: 173c97c36 (mm), 635 g

2.03 ANTENNAS

A. General
1. Antennas shall be provided at the sites listed in the contract drawings.
2. Antennas shall be selected for the specified frequency range and provided with all mounting hardware and grounding connections as required.
3. License frequency antennas shall be factory tuned for the specified frequency and center cut for dual frequency applications.

B. Yagi/ Omni Antenna (900 MHz)
1. The antenna shall be fabricated of fiberglass or anodized aluminum rod and seamless drawn pipe. The hardware and fastenings shall be 316 stainless steel. The coax feed and connector shall be sealed in a foam potting system to prevent moisture penetration and assure long service life in severe environmental conditions.
2. Antenna shall be installed at all remote site(s) as indicated in the Contract Documents.
3. Electrical

Frequency Range	890-960 MHz
Gain	6-12 dBi
Impedence	50 Ohm
Maximum Power Input	100 Watts (at 50 deg C)
VSWR	< 1.5:1 max (1.35:1 Typical)
Front-to-back Ratio	<20 dB
Polarization	Horizontal or Vertical

4. Mechanical

Connector	Integral N-Female
Weight	3 lb or less
Length (Yagi	24 in or less
Wind Survival Rating	150 mph
Operating Temperature	-40°C to +85°C (-40°F to +185°F)

2.04 TRANSIENT SURGE PROTECTOR

A. Coaxial Surge Protection: Lightning surge suppression shall be provided at each radio location. The protector shall be a general coverage bulkhead mount coaxial surge protection device with multi-strike capability. The surge protector shall meet the following:

Response Time	2.5 nanoseconds, maximum
Surge Current Test	(IEC 1000-4-5 8/20 us Waveform): 500 J.
VSWR	1.2 to 1, maximum
Insertion Loss	0.2 dB, maximum
Characteristic Impedance	50 Ohms
Mechanical	Type N female connector, bulkhead mount

2.05 TRANSMISSION LINES

A. Coaxial Jumper
   1. Manufactured coaxial jumpers shall be installed between the radio and panel coaxial surge protector.
   2. The jumper shall be factory assembled with the mating connectors attached and compatible with the radio and surge protector connection points.
   3. The coaxial connection cable length shall be coordinated to provide a strain free connection between the radio and surge protector.
   4. Jumper cable shall be ½", super-flexible.

B. Transmission cable
   1. Transmission cable shall be Commscope WBC series 900 Mhz from Hyperlink Technologies or ENGINEER-approved equal.
   2. Transmission cable shall be Low loss, super flexible non-kinking with a minimum bending radius of 2". Cable length shall be continuous between the surge protector and antenna without splicing or midpoint connection.
   3. Cable construction shall be weather tight and shall be constructed as follows:
      a. Copper/Aluminum Center Conductor
      b. Polyethylene Foam Dielectric
      c. Tinned Copper Outer Braid
      d. Aluminum Tape shield bonded to the dielectric
      e. Polyethylene Outer Jacket
      f. Cable shall be constructed with an inert flooding compound to provide a weather tight seal.

2.06 RF CONNECTORS

A. RF mating connectors shall be selected to match the connection requirements of the Antenna, Surge Arrestor and Radio Equipment for the specified frequency range.

B. Cable connectors shall be low loss connectors compatible with the supplied RF transmission cable.

C. Cable connectors shall match the equipment connection. Cable connection adapters shall not be utilized. Connectors shall be attached to the cable in accordance with the manufacturer's installation requirements.

2.07 ACCESSORIES

A. Provide mounting hardware, grounding kits, cable hangers and other materials per this and applicable specifications required to make a complete and operable radio antenna feed system.

PART 3 – EXECUTION

3.01 GENERAL INSTALLATION REQUIREMENTS.

A. General installation requirements shall be as described in the manufacturer's O&M manual.

B. Communications equipment shall be mounted as indicated on the Drawings.

C. A physical radio path study must be performed for system configuration parameters and for the sites indicated on the drawings. The results of that study must be available to the OWNER.

D. Surge suppressor shall be bulkhead mounted on the radio enclosures and shall be suitable for the sizes of cable required inside and outside the enclosures.

3.02 INSTALLATION AND START-UP

A. Perform Site Work and install Communications equipment as shown on Drawings. Install associated equipment including antenna mounts, cables, cable jumpers, connectors, and grounding systems.

B. Install antennas, associated transmission lines, conduit work and any ancillary antenna accessories per this and applicable specifications and as shown on the contract drawings.

C. Provide weather wrapping for all exposed cabling and connectors. Weather wrapping shall be Scotch 3M, cold shrink.

D. Antenna shall be firmly secured utilizing all necessary mounting brackets, clamps, bolts, screws, and adapters. Mounting hardware shall be heavy duty rigid stainless steel.

E. Antennas shall be aligned at each location to provide the maximum RSSI.

F. RF connectors shall be installed in accordance with the manufacturer's installation requirements.

3.03 FUNCTIONAL TESTING

A. Perform the following feed system test for each antenna and feed system installation:
   1. Perform a Time Domain Reflectometer (TDR) trace of the antenna and feed system in their installed configuration from the radio port to the antenna at the frequency of operation. For UHF and VHF antennas, use the frequency shown on the drawings. Setup the TDR to normalize the trace to the radio antenna port based on the type of cable used.
   2. Correct components with VSWR greater than the specified maximum.
   3. Correct transmission lines with discontinuities exceeding a VSWR of 1.2.

B. Perform the following transmitter tests (power output at antenna port) for the Licensed MAS Polling Remote, Licensed MAS Repeater and licensed MAS Remote radio installation:
   1. Measure and document transmitter power output.
   2. Label radio with transmit power output.

3. Measure receiving signal strength at repeater for each station.

C. Perform the following adjustments and tests for the Licensed MAS Remote radios:
   1. Align remote site antennas for maximum receive signal level.
   2. Record receiving signal level for the radio and repeater location.
   3. Notify City personnel if receive signal level is below -95 dBm.

D. Perform the following diagnostic tests for each radio installation:
   1. Set the radio for diagnostic loop back mode.
   2. Perform loop back diagnostics using the Cities diagnostic software provided.
   3. Replace any radio that does not meet the manufacturer's specifications.
   4. Print final test record from diagnostic software.

E. Submit test records for each radio station installation including the following information:
   1. Site name.
   2. Test date.
   3. Name of person performing test.
   4. Test equipment model number, serial number, and calibration date.
   5. TDR traces labeled with the antenna identifier as shown on the drawings.
   6. Transmit power.
   7. Reflected Power.
   8. VSWR
   9. Receive signal level at station and repeater location.
   10. Final test record from diagnostic software.
   11. Radio Configuration: Review radio configuration for agreement with manufacturer's recommendations.

3.04 PREPARATION

A. Ensure spare parts and consumables are available to complete the Site Acceptance Test.

B. Provide Radio Commissioning Binder.

3.05 GROUNDING ROD INSTALLATION

A. Where rock bottom is encountered, drive ground rod at an oblique angle not to exceed 45 degrees from the vertical or bury in a trench at least 2½ feet deep.

B. Ensure that any single ground rod having a resistance to ground of greater than 15 ohms is augmented with one additional rod. Where multiple ground rods are required, ensure they are at least 6 feet apart.

C. Attach main ground conductor to ground rod with exothermic welding, listed pressure connectors, or listed clamps.

END OF SECTION

SECTION 40 6700 – LOCAL CONTROL PANELS

PART 1 – GENERAL

1.01 REQUIREMENT

A. The CONTRACTOR shall furnish all tools, equipment, materials, and supplies, and shall perform all labor as required for installing Local Control Panel (LCP's) as indicated on the Drawings and as specified herein or in other Sections of the Specifications.

B. The following is a list of LCP's to be furnished under this Contract which are required to meet these specifications:
   1. SBR Control Panel (Furnished by SBR System Manufacturer and installed by CONTRACTOR).
   2. Headworks Control Panel (Furnished and installed by CONTRACTOR).
   3. Sludge Bagging System Control Panel (Furnished and installed by CONTRACTOR).
   4. Drying Bed Lift Station Control Panel (Furnished and installed by CONTRACTOR).
   5. Overflow Lift Station Control Panel (Furnished and installed by CONTRACTOR).

C. All LCP panels shall be designed and constructed to the following minimum standards using the following PLC / HMI platforms:
   1. Allan Bradley – Compact Logics L43 or approved equal
   2. I/O Modules with minimum 15% open I/O
   3. 12” Color Panel View Human Machine Interface (HMI) Terminal w/ 120VAC Power Supply
   4. N-tron Industrial 5-port PoE Ethernet Switch – Model 105TX-POE
   5. Redundant 24 VDC Power Supplies for Field Instrumentation
   6. Sealed, mechanical cabinet cooling, if required, to maintain interior panel ambient temperatures below equipment stated operating conditions.
   7. All inputs such as instruments, sensors, and interfaces (switches, buttons, etc.) shall use 24 VDC
   8. All external inputs shall be individually fused with blown-fuse indicators
   9. All analog inputs shall be provided with loop isolation
   10. All outputs shall be isolated with interposing relays with integrated indication lights and manual override buttons
   11. All external connections into or out of the panel shall be made using UL listed terminal blocks
   12. All spare I/O shall be wired out to terminal blocks
   13. 30mm manual switches, buttons and lights shall be provided for each motor, gate or operator local to each machine.
   14. Panels shall be UL508 listed.

1.02 RELATED WORK AND CONSTRUCTION STANDARDS

A. Each LCP shall be a UL 508A recognized panel assembler. All control panel components shall be UL Listed under the category "Industrial Control Equipment".

1.03 SUBMITTALS

A. Submittals shall be furnished in accordance with Section 01 3300 – Submittal Procedures.

1.04 OPERATING AND MAINTENANCE MANUALS

A. Installation requirements and procedures.

B. Complete instructions regarding the operation and maintenance of equipment involved. Instructions and documentation not related to the equipment furnished must be removed

or crossed out. O&M manuals must be individually tailored to the project and equipment as furnished

C. Bill of Materials, component data sheets, descriptive literature, product specification sheets, wiring diagrams and calibration procedures. O&M manuals must be individually tailored to the project and equipment as furnished

D. Complete nomenclature of replaceable parts, part numbers, current cost, name, and address of nearest vendor of replacement parts. Information on equipment or components not related to equipment furnished must be removed or crossed out. O&M manuals must be individually tailored to the project and equipment as furnished

1.05 QUALITY ASSURANCE

A. Equipment to be furnished under this Section shall be the product of firms regularly engaged in the design and manufacture of this type of equipment. Manufacturer shall assume responsibility for, and guarantee performance of equipment furnished.

B. The manufacturer shall provide a 1-year equipment warranty.

C. Equipment shall be designed and installed to conform to Drawings, Specifications, engineering data, related equipment furnished by other suppliers and recommendations of the PLC manufacturer.

D. Comply with the following Codes and Standards:
   1. NEMA (Testing Standards BU 1.3.03 or 1.304)
   2. UL listing and labeling for materials.
   3. NFPA-70
   4. UL 508A

PART 2 – PRODUCTS

2.01 GENERAL

A. The CONTRACTOR shall furnish the LCP(s) to satisfy the functional requirements specified in the relevant mechanical equipment, these Specifications, and as indicated on the Drawings. All components shall be UL labeled or provided with proper ground fault protection as required by UL 508A.

B. LCP enclosures shall be 304 or 316 stainless steel NEMA 4X with hinged lockable doors. Freestanding enclosures shall have a 3-point latching handle. Outdoor enclosures with panel mounted devices shall contain a white interior swing panel.

C. Identification of panel-mounted devices, conductors, and electrical components shall meet the requirements specified herein.

2.02 TERMINAL BLOCKS

A. Each LCP shall be provided with identified terminal strips for the connection of all external conductors. There shall be sufficient terminal blocks for all external connections plus an additional 25 percent spare for future use. Terminal blocks shall be identified in accordance with approved shop drawings. Terminal blocks shall be individual, stacking, compression type, 600VAC, 30A minimum, suitable for wire sizes No. 10 - No. 18. A printed terminal block label shall be affixed to each terminal block for identification.

B. Each field-mounted device deriving power from the LCP shall be individually fused with a knife-blade or plug-in fused terminal block and blown fuse indicator.

C. Terminal blocks for analog signals shall include an indicator light that is illuminated when the signal is present. A grounding type terminal block shall be provided for termination of the analog signal cable shield/drain wire.

2.03 OPERATOR DEVICES

A. Pushbuttons, selector switches, and pilot lights shall be of the heavy-duty, oil-tight type, 30mm in size. Miniature style devices are not acceptable.

B. Pilot lights shall be push-to-test, LED style with LED and lens color as indicated on the Drawings.

C. START buttons shall have green cap and STOP buttons shall have red caps. All other button caps and selector switch operator handles shall be black.

D. Selector switches shall have the number of positions as indicated on the Drawings or as required to perform the intended function. Provide the number of 120VAC, 10A contacts as indicated on the Drawings or as required to perform the intended function.

E. Provide an engraved legend plate or provide laminated plastic nameplates as specified elsewhere for each device.

F. The operator devices shall have a NEMA rating equal to or more stringent than the control panel in which it is mounted.

G. Acceptable manufacturers:
   1. Cutler-Hammer 10250 series
   2. Square D 9001SK series
   3. Or ENGINEER-approved equal.

2.04 CONTROL RELAYS

A. Relays shall be DPDT (minimum) plug-in type utilizing rectangular blades with an indicating LED, and sockets with screw-type terminals and hold-down clips. Operating coil voltage shall be as required or indicated on the Drawings.

B. Contacts shall be rated 10 Amps at 120 VAC. Contact material shall be silver-cadmium oxide except for signal switching circuits that shall be gold plated or other noble metal.

C. Acceptable manufacturers
   1. Square D Type K,
   2. IDEC Type RH,
   3. Or ENGINEER-approved equal

2.05 TIMING RELAYS

A. Time delay relays shall be a combination on-delay and off-delay (selectable) with adjustable timing range from 1 sec to 10 hours. The timing relays shall include an LED indicator that is illuminated when the relay is timing out. Operating coil voltage rating shall be as indicated on the Drawings with DPDT, 120VAC, 10 amp rated contracts. Provide sockets with screw-type terminals and hold-down clips.

B. Reset Timers: Reset timers shall be synchronous motor driven with a solenoid-operated clutch. The timing relays shall include an LED indicator that is illuminated when the relay is timing out. Voltage rating shall be as indicated on the Drawings with 120VAC, 10 amp rated contacts, and timing range as required or indicated on the Drawings.

C. Acceptable manufacturers:
   1. ATC
   2. DEC
   3. Or ENGINEER-approved equal

2.06 SIGNAL CONDITIONERS

A. Current-to-current converter/isolators shall be 4-20 mA input, 4-20 mA output. The INTEGRATION CONTRACTOR shall utilize signal isolators where necessary to boost or isolate signals for proper operation.

B. Pulse-to-current converters shall convert a square wave pulsed frequency to a proportional 4-20mA output and shall operate on 120 VAC.

C. Acceptable manufacturers:
   1. Moore Industries
   2. AGM
   3. Or ENGINEER-approved equal

2.07 POWER SUPPLIES

A. Power supplies shall be DIN-rail mounted and be of the solid-state circuitry type UL-1950 and CSA-1402C certified. Input power shall be 120VAC, +/- 10%, output voltage shall be as indicated on the Drawings or as required for proper operation of connected loads.

B. Power supplies shall be sized for 200% of the total connected load.

C. Line regulation shall be within +/- 0.05 percent with a 10 percent line change. Load regulation shall be within +/- 0.05 percent with a 50 percent load change. Output ripple shall not exceed 0.2 percent peak-to-peak: Transient response shall be less than 50 microseconds for a 50 percent load change.

D. Power supplies shall be fully rated with an efficiency of at least 60 percent for a temperature range of 0 - 60°C or be oversized appropriately. Power supplies shall produce EMI/RR noise levels within the requirements of FCC Docket 20780.

E. Power supplies shall contain internal short circuit and overload protection. Output fusing shall be supplied on the positive terminal.

F. Acceptable manufacturers:
   1. Acopian
   2. Sola
   3. IDEC
   4. Phoenix Contact
   5. Or ENGINEER-approved equal

2.08 UNINTERRUPTIBLE POWER SUPPLY (UPS)

A. The UPS shall be on-line, with automatic bypass switching upon failure, and with automatic bypass switching for maintenance. The UPS shall include built-in surge protection, rectifier/battery charger, batteries, inverter, static transfer switch, and solid-state controls to provide a true sine-wave output.

B. Input power 120VAC, +/-10%, 60Hz.

C. Output power shall be 120VAC +/- 5% 60Hz with a harmonic distribution at less than 5% (voltage).

D. UPS KVA ratings have been indicated on the Drawings for bidding purposes only. Actual KVA rating of each UPS shall be as required to operate all loads being served for a minimum of 20 minutes without input power. KVA in-rush rating shall not be less than 150% of connected load's in-rush current. UPS load calculations must be submitted with the UPS for approval.

E. Switching response time shall be less than 4 milliseconds.

F. Batteries shall be sealed, no maintenance type, designed for 5 years minimum service.

G. Display shall include: On-line or bypass operation, input power failure, UPS fault, UPS battery low.

H. Where indicated, the UPS shall be provided with dry contacts that close upon low battery alarm.

I. The UPS manufacture shall provide 1-year parts and labor warranty.

J. Acceptable manufacturers:
   1. APC
   2. Best
   3. Or ENGINEER-approved equal

2.09 SPARE PARTS

A. Provide a minimum of 10 spare lamps.

B. Provide one control and one timing relay of each type utilized.

C. Provide one spare power supply of each size and type utilized.

D. Provide (3) spare fuses of each size and type utilized.

E. Refer to related Specification Sections for additional spare parts required.

PART 3 – EXECUTION

3.01 FABRICATION

A. LCP's shall contain components as indicated on the Drawings. The division of I/O between LCPs shall be provided per the Process and Instrumentation Diagrams (P&IDs).

B. All front accessible panel-mounted devices shall be mounted a minimum of 42 inches above finished floor elevation.

C. Where AC and DC signals must intercept each other, cross wires at 90-degree angles. Route AC and DC signals in separate wireways. Provide blank wireways for field wiring by the CONTRACTOR.

D. All internal wiring shall be contained in plastic raceways or troughs having removable covers. Wiring to door-mounted devices shall be extra flexible and anchored to doors using wire anchors cemented in place. Exposed terminals of door-mounted devices shall be guarded to prevent accidental contact with energized terminals.

E. Minimum control panel conductor size for power shall be No.12 AWG. Minimum conductor size for control wiring shall be No. 14 unless protected by a 10A overcurrent protective device or smaller, in which case it can be No.16 AWG (in PLC and operator interface cabinets only). Analog signal cables shall be 600V, No.16 AWG twisted shielded pair.

F. Wire markers shall be heat shrinkable, be a minimum of 3/8-inches in length and placed as near as possible to the end of the wire.

G. Identification of panel-mounted devices control equipment enclosure shall be engraved laminated plastic with black letters on white background. Use minimum 3/16-inch letters for identifying individual panel components. Use minimum 3/8-inch letters for identifying control equipment enclosure.

H. LCP enclosure doors that contain 120VAC devices shall be bonded to the enclosure grounding lug.

I. Each PLC I/O point connected to an external device shall be terminated at terminal blocks.

J. All analog signals shall be individually fused at the terminal block. See additional requirements as specified elsewhere in these specifications.

3.02 INSTALLATION

A. LCP(s) shall be installed as indicated on the drawings.

B. All front accessible panel-mounted devices shall be mounted a minimum of 42-inches above finished floor elevation.

C. LCP(s) shall be stored in an indoor, dry location at the jobsite to protect from condensation, damage, and the effects of weather.

D. LCP(s) interiors and exteriors shall be cleaned, and coatings shall be touched up to match original finish upon completion of the work.

END OF SECTION

SECTION 40 7000 – FIELD INSTRUMENTATION

PART 1 - GENERAL

1.01 REQUIREMENT

A. This Section includes the general requirements for furnishing and installing the field instruments as indicated on the Drawings and specified in this Division of these specifications. Other instrumentation and control sections of this Division shall supplement this Section as necessary. These specifications shall not apply to instrumentation to be provided by process equipment vendors as part of the process systems or equipment already approved by the ENGINEER.

B. The field instrument schedule is attached to the end of this Specification Section but shall not be construed as a Bill of Materials or as a complete listing of all required devices. The I&C INTEGRATOR shall be responsible for all field instruments indicated in these Specifications and the Contract Documents.

C. The I&C INTEGRATOR shall provide all labor, materials, and incidentals as indicated, specified, and required to furnish, install, calibrate, adjust, test, document, start-up, and train for each field instrument furnished.

D. Labor, materials, apparatus, and components essential to the complete functioning of field instruments described and indicated herein, or which may be reasonably implied as essential, whether mentioned in the Contract Documents or not, shall be furnished and installed by the I&C INTEGRATOR. In case of doubt as to the work intended, or in the event of need for explanation thereof, the I&C INTEGRATOR shall refer to the ENGINEER for supplemental instructions.

E. For purposes of clarity and legibility, the Drawings are diagrammatic only. Construction Documents are not intended to show every fitting, junction, or component nor every difficulty that may be encountered during installation or coordination with different equipment manufacturers. The I&C INTEGRATOR shall refer to related data in all Contract Documents and shall verify this information on site.

1.02 SUBMITTALS

A. Submittals shall be furnished in accordance with Section 01 3300 – Submittal Procedures.
   1. Descriptive Data: Submit copies of complete descriptive literature, performance data, physical dimensions, power, and signal connections for each field instrument to be furnished. Provide name of manufacturer, style, and complete model number. Listing items "as specified" without both make and model or type designation is not acceptable.
   2. Component Data Sheets: Submit a component data sheet for each piece of instrumentation equipment similar to an ISA S20 form. Include equipment tag number, manufacturer's model number, location of service, materials of construction, size and scale range, calibrated range, set points, optional accessories, and any other useful information.
   3. Submit drawings and bill of materials for any sun shields that may be required. Drawings must clearly indicate how the sun shield will be fabricated and mounted.

1.03 OPERATING AND MAINTENANCE MANUALS

A. Installation requirements and procedures.

B. Complete instructions regarding the operation and maintenance of equipment involved. Instructions and documentation not related to the equipment furnished must be removed or crossed out. O&M manuals must be individually tailored to the project and equipment as furnished.

C. Bill of Materials, component data sheets, descriptive literature, product specification sheets, wiring diagrams and calibration procedures. O&M manuals must be individually tailored to the project and equipment as furnished.

D. Complete nomenclature of replaceable parts, part numbers, current cost, name and address of nearest vendor of replacement parts. Information on equipment or components not related to equipment furnished must be removed or crossed out. O&M manuals must be individually tailored to the project and equipment as furnished

E. Provide a copy of all instrument calibration reports.

F. Refer to Applicable Sections of Division 40 – Process Integration for additional requirements.

1.04 QUALITY ASSURANCE

A. Equipment to be furnished under this section shall be the product of firms regularly engaged in the design and manufacture of this type of equipment. Manufacturer shall assume responsibility for, and guarantee performance of equipment furnished. However, this shall not be construed as relieving the I&C INTEGRATOR from responsibility for the proper installation and functioning of the work.

B. The manufacturer shall provide a 2-year equipment warranty.

1.05 COORDINATION

A. The I&C INTEGRATOR shall coordinate with all other equipment manufacturer to ensure proper installation and operation of the field instruments.

B. The I&C INTEGRATOR shall coordinate with all other trades to avoid conflicts and interferences. No extra compensation will be allowed for changes made necessary due to conflicts between various equipment.

C. Any discrepancies noted in these contract documents or discrepancies between Drawings and actual field conditions shall be promptly brought to the ENGINEER for a decision. No extra compensation will be allowed for changes made by the I&C INTEGRATOR without ENGINEERs consent.

D. IDENTIFICATION TAGS (To be provided by Contractor, as per these Specifications.)

PART 2 - PRODUCTS

2.01 PROVIDE INSTRUMENTATION AS NOTED ON THE EQUIPMENT LIST.

2.02 MAGNETIC FLOWMETERS

A. General:

1. Magnetic flowmeters systems shall be of the low frequency electromagnetic induction type and produce a DC pulsed signal directly proportional to and linear with the liquid flow rate. Complete zero stability shall be an inherent characteristic of the flowmeter system. Each magnetic flowmeter system shall include a metering tube, signal cable, transmitter, and flowmeter grounding rings.
2. Flowmeter shall be for the appropriate type to measure water flow rate in water or wastewater as required by the Contract Documents.
3. Magnetic flowmeters and electronics shall be manufactured at facilities certified to the quality standards of ISO Standard 9001 - Quality Systems - Model for Quality Assurance in Design/Development, Production, Installation, and Servicing.
4. Flowmeters that are to be located on a submerged pipe shall be designed to operate in such conditions. Flowmeter display shall be located above water level and a connection cable of appropriate length shall be provided to allow connection to display location.

B. Metering Tube:
   1. Constructed of stainless steel with 150 lb. carbon or stainless steel ANSI B16.5 Class 150 flanged connection.
   2. Utilize a minimum of 2 bullet-nosed, self-cleaning electrodes.
   3. The liner shall be non-conductive and in conformance with the Manufacturer's recommended service.
   4. Electrodes constructed of materials that are in conformance with the Manufacturer's recommendation for the meter's intended service.
   5. Meter housing rated for accidental submergence.
   6. Two stainless steel grounding rings shall be furnished and installed in accordance with the manufacturer's bore and material recommendation for the meter's intended service. Installation shall be per flowmeter manufacturer's recommendations. Unless otherwise indicated, flowmeter grounding shall consist of a 3/4" x 10-foot copper clad ground rod bonded to the grounding rings with a No.6 bare copper conductor.

C. Transmitter: The transmitter shall be mounted on the flow-tube or remotely where indicated on the Drawings. The interconnecting cable shall be furnished by the flowmeter manufacturer of sufficient length to avoid splicing. Transmitters shall be housed in NEMA 4X enclosures suitable for mounting outdoors. The transmitter shall produce an electrically isolated 4-20mA DC output into a minimum load of 800 ohms linear to flow and a dry-contact, field adjustable, pulsed output for remote totalization.

D. Performance Requirements:
   1. Measuring Range: 0.33 to 33 ft/s
   2. Calibrated Range: 1.0 to 33 ft/s
   3. Time Constant: 0.01 to 100 seconds.
   4. Accuracy: ±0.2 percent of flow rate from 10 to 100 percent of full range over 1 ft. per second at 0 x D inlet run.
   5. Repeatability: 0.1 percent of full scale.
   6. Isolation: either galvanic or optic
   7. Empty pipe detection: The flow transmitter shall display "Empty Pipe" when the metering tube is not completely full.
   8. Power consumption: 30 watts max
   9. Power supply: 85 to 260 VAC
   10. Communication Protocol: Modbus RS-485, Ethernet

E. Factory Testing: Each flowmeter shall be hydraulically calibrated at a facility that is traceable to the National Institute of Testing Standards using a 3-point (minimum) test. The calibrations procedures shall conform to the requirements of MIL-STD-45662A. A real-time computer-generated printout of the actual calibration data indicated apparent and actual flows for each flow test shall be submitted to the ENGINEER with final project documentation.

F. Acceptable Manufactures:
   1. Endress + Hauser Model Promag 53W,
   2. Toshiba
   3. or ENGINEER-approved equal

2.03 LEVEL TRANSDUCER

A. Signal Output
   1. 4-20 MADC 2 wire twisted pair grounded shield cable @ 0.042 ohm/ft
   2. FM and CSA explosion-proof and intrinsically safe
   3. Unit meets EMI/RFI for Mil-Std 461/462 Rev. E
   4. Response time: <5ms

B. Accuracy
   1. Static Accuracy: 0.25% FSO BFSL
   2. 1-year Stability: 0.20% FSO
   3. Error Band: 0.90% BFSL FSO

C. Temperature
   1. Temp. Compensation: +35°F to +125°F
   2. Operating temp.: -20°F to +190°F
   3. Storage temp: -65°F to +250°F

D. Electrical Connection and Protection
   1. Vented, watertight, polyurethane-jacketed cable, 40 feet standard
   2. 10-30 VDC unregulated power
   3. Unit is FM explosion-proof and FM intrinsic safe.

E. Material
   1. Wetted Parts: 316 Stainless Steel Inconel Sensor
   2. Body: 300 Stainless Steel, explosion-resistant
   3. Cable: Polyurethane-jacketed cable
   4. Cable: 40 feet standard

F. Agency Approval Options
   1. Explosion-proof rated Class I, II, III, Division I, Groups A, B, C, D, E, F, G.

G. Ranges
   1. 50 psi or per plan

H. Acceptable Manufacturers:
   1. E&H FMX-21
   2. Or ENGINEER-approved equal

2.04 LEVEL FLOATS

A. Float switches shall be used to sense liquid level in a tank, basin or other applications as indicated on the Drawings. Floats shall be mechanical activated switch contact, rated for 10A @240V for mechanical pump duty or 5A @ 240V for control duty. The float ball shall be constructed of 316 stainless steel or durable polypropylene material construction with solid polyurethane foam interior. It shall be leak proof, shock proof, and impact resistant. Switch shall be non-mercury type.

B. The switch contact configuration shall be normally open (N.O.) or normally closed (N.C.) as required to perform the proper operation as intended in these Contract documents. Actuation point shall be 1” above or below the horizontal. Power chord shall be chlorinated polyethylene material. Cord weight shall be zinc plated cast iron – 1.22 lb minimum with split-weight design for ease of adjustment.

C. Floats shall be installed such that the switch activation takes place at the liquid level as indicated or directed by the ENGINEER at time of construction. The float switch assembly shall include 1" schedule 80 PVC fastened to the tank/basin wall with 316 stainless steel anchors and clamps if required to secure the float(s) into place or as indicated on the Drawings. Float switch cables shall be secured to the cable or PVC pipe with weather-resistant, UV rated tie-wraps.

D. Acceptable Manufacturers:
   1. Connery
   2. Or ENGINEER-approved equal

2.05 PRESSURE GAUGES

A. Pressure gages shall have the following features as a minimum:
   1. Housing: 4-1/2", aluminum case with plastic lens, white dial and black numbers/graduations/pointer
   2. Silicone oil filled
   3. Range: as indicated elsewhere
   4. Proof pressure: 150 percent of range psi minimum
   5. Accuracy: one percent of full scale
   6. Wetted material: 316 stainless steel
   7. Dial/pointer: stainless steel or aluminum
   8. Service: liquid, gas, or vapors as indicated on the Drawings
   9. Process connection: 1/4" NPT male
   10. Calibration: micro-adjustment screw
   11. Accessories: test cock, female outlets, and an isolation ball valve

B. An isolation ball valve shall be furnished and installed on each pressure gauge for ease of removal without disruption of service. The valve shall be sized as required for the process connection.

C. A diaphragm seal shall be furnished and installed to isolate each pressure gauge installed with a process connection other than potable water or clean air.

D. The I&C CONTRACTOR shall furnish and install all mounting hardware and support structures necessary for proper operation in accordance with the manufacturer's recommendations and the Contract Documents. Materials used for support structures shall be suitable for the environment in which it is installed (corrosive - stainless steel, non-corrosive - galvanized steel; unless indicated otherwise).

E. Acceptable Manufacturers:
   1. US Gauge (Ametek)
   2. Ashcroft
   3. Winters
   4. Or ENGINEER-approved equal

2.06 PRESSURE TRANSMITTER

A. The pressure transmitter shall measure the pressure in the line and shall transmit a 4-20 mA output for process control. The unit shall have an LCD display for local readings.

B. Requirements
   1. Accuracy: ±1% down to 10:1
   2. Display: 4-character LCD
   3. Output: 4-20 mA
   4. Pressure: 200 psi
   5. Sensing Element: 316 SS diaphragm
   6. Wetted Material: 316 SS
   7. Process Connection: 1/4” NPT (F)
   8. Power: 12 – 45 VDC
   9. Enclosure: NEMA 4X

C. Acceptable Manufacturers:
   1. Rosemount
   2. Endress & Hauser
   3. Or ENGINEER-approved equal

PART 3 - EXECUTION

3.01 INSTALLATION

A. The I&C INTEGRATOR shall furnish and install all mounting hardware and support structures for the instrumentation and the logic unit as required for proper operation in accordance with the manufacturer's recommendations and the Contract Documents. Materials used for support structures shall be suitable for the environment in which it is installed (corrosive – PVC, Fiberglass or stainless steel, non-corrosive – stainless steel; unless indicated otherwise).

B. Inspect each instrument and piece of equipment for defects, damage, and correct operation before installation. Inspect work area and work involving other trades to verify readiness for installation.

C. Field instruments shall be installed per manufacturer's requirements. Verify that all mounting, process, and electrical connections are secure and tight before operating instrument.

D. Install field instrument identification tag as described above.

E. The I&C INTEGRATOR shall coordinate with the Mechanical I&C INTEGRATOR to verify process connection type and location.

F. Field instruments installed in hazardous (classified) locations shall be installed in approved enclosures or electrically connected through an intrinsically safe barrier and shall meet all other requirements of NFPA 70 Articles 500-503.

G. Furnish and install sun shields for all analog instruments installed outdoors in direct sunlight where recommended by the instrument manufacturer.

H. Additional installation supervision, calibration, testing, and start-up requirements are provided in these Specifications.

END OF SECTION

SECTION 41 2200 – CRANES AND HOISTS

PART 1 – GENERAL

1.01 THE REQUIREMENT

A. Provide permanent and/or portable lifting equipment and ancillary equipment as specified below.

1.02 SUBMITTALS

A. Submittals shall be furnished in accordance with Section 01 3300 – Submittal Procedures.

B. Submittal shall also include base dimensions, footing requirements, and footing reaction forces.

1.03 WORK INCLUDES THE FOLLOWING:

A. Detailed design of completed crane system, including bridge, end trucks, trolley, hoists, cabling, controls, and all appurtenances specified hereinafter.

B. Shop drawings

C. Fabrication of a complete crane

D. Inspection and shop testing

1.04 REFERENCES

A. Equipment furnished under this section shall comply in all respects with the requirements of the following standards:

OSHA	Occupational Safety and Health Administration
CMAA	Crane Manufacturer's Association of America
HMI	Hoist Manufacturer's Institute
ANSI	American National Standards Institute
NEMA	National Electric Manufacturer's Association
NEC	National Electric Code
AWS	AWS D14.1 Specification for Welding Cranes

1.05 QUALITY ASSURANCE

A. Contractor shall adhere to OSHA, state, and local safety guidelines, laws, rules, and regulations.

B. Contractor shall be licensed in the state of Arizona and have a minimum of 10 years' experience in the manufacture, fabrication, and installation of bridge cranes.

C. Contractor shall conform to all applicable ANSI, CMAA, and HMI specifications and/or standards.

D. Comply with CMAA specification 74 or 70, as applicable.

E. Long lead items [hoist, end trucks, drives and controls] will be ordered by contractor upon receipt of purchase order and credit approval. Steel will not be ordered until shop drawings and submittals have been approved by the customer.

F. All electric equipment shall be UL, CSA, or ETL labeled.

1.06 WARRANTIES

A. Provide one-year equipment warranty.

1.07 SERVICE AGREEMENT

A. Provide optional cost for two-year service agreement from local service organization.

PART 2 – PRODUCTS

2.02 DAVIT CRANE

A. Manufacturer: davit crane shall be Model Captain 2500 by Thern, Inc., or ENGINEER-approved equal.

B. The following design conditions are required for the crane:

Pump Stations and SBR Basin Davit Crane:

Lifting Capacity:	1,500 lbs. capacity at 122" reach
Hook Reach:	74” (shortest position), 122” (fully extended)
Winch Operation:	Manual
Boom Angle Adjustment:	Manual adjustment
Lift required:	30 Ft. (minimum)
Base Requirement:	Pedestal

C. Design Factor: yield design factor shall be a minimum of 1.5 under static conditions for all crane components including winch and base. Breaking strength safety factor shall be a minimum of 2.5 under static conditions. Comply with CMAA 70 or 74.

D. Hook Height: hook height shall be adjustable by moving the boom up or down between 5 degrees above horizontal and 45 degrees from vertical, with a minimum of 86 inches between the lowest position and the highest position with the boom fully extended.

E. Boom Angle: boom angle shall be adjustable at all times. Hand operated screw jack or ratchet-style screw jack shall be provided as required to raise or lower the boom between 5 degrees above horizontal and 45 degrees from vertical.

F. Boom Sheave: wire rope shall pass over a sheave at the end of the boom. Sheave shall have a bearing and shall be supported by a machined clevis pin which shall be keyed to the boom to keep the pin from rotating.

G. Clearance: minimum height of the boom shall be 36 inches between mounting surface and the underside of the boom in all base configurations.

H. Rotation: mast and boom shall rotate 360 degrees in the base, with a rotational handle attached to the mast to facilitate rotation. Crane shall include a bearing sleeve to support the mast at the top of the base.

I. Fastening Pins: crane components shall be fastened together using stainless steel clevis style pins, secured with lynch pins with lanyards fastening the lynch pins to primary structural components.

J. Portability: davit crane shall break down into portable components with no single component weighing more than 100 pounds. Carrying handles shall be welded to mast and boom.

K. Winch Location: lifting winches shall be located such that the center point of the drive shaft is behind the centerline of the mast.

L. Winch Mounting Bracket: crane shall be equipped with a winch mounting bracket that connects to the crane with a pin allowing the winch with bracket to be attached or removed without tools. Winch shall attach to the bracket using standard fasteners.

M. Nametag: davit crane shall be labeled with a non-corrosive metal identification plate labeled or imprinted with the manufacturer’s name, model number, serial number, capacity rating, and other essential information.

N. Painting**:**

1. Crane shall be factory painted per manufacturer’s standards, with finish per Owner’s Selection.
2. Crane shall be shop cleaned, primed, and painted as defined in these Specifications. The following items shall not be painted: Cable/Wire Rope

PART 3 – EXECUTION

3.01 SERVICES OF MANUFACTURER

A. Inspection, Startup, and Field Adjustment: The hoist systems shall be assembled and tested per the manufacturer's instructions and requirements. The test shall be performed using a load equal to ¾ of the load rating of the system and shall be demonstrated to the satisfaction of the ENGINEER prior to acceptance.

END OF SECTION

SECTION 43 2513 – SUBMERSIBLE SEWERAGE PUMPS

PART 1 – GENERAL

1.01 THE REQUIREMENT

A. Furnish and install submersible pumps with associated piping and appurtenances, including pump base, SS guild rails, and supports complete and operable in accordance with the Contract Documents.

B. The Supplier shall examine the site conditions, intended application, and operation of the pump system and recommend the pump which will best satisfy the indicated requirements.

C. Coordinate with hatch manufacturer in accordance with these Specifications.

1.02 SUBMITTALS

A. Submittals shall be furnished in accordance with Sections 01 3300 – Submittal Procedures.

1.03 OPERATING AND MAINTENANCE MANUAL

A. Operation and Maintenance Manual shall be furnished in accordance with these Specifications.

1.04 QUALITY ASSURANCE

A. Pump manufacturer and model shall be as described on the Drawings or Engineer approved equal.

B. The manufacturer shall provide a 2-year equipment warranty.

C. Manufacture shall be required to provide a one-year clog-free guarantee, published in writing from the manufacturer prior to being selected for the project.

1.05 SPARE PARTS

A. Provide all spare parts anticipated to be required for the first 2 years of operation. Manufacturer shall clearly define quantity, description of part and associated part numbers as part of manufacturer's scope of supply.

B. Spare parts shall be placed in a separate container clearly marked as "Spare Parts." All parts shall be identified and clearly labeled with applicable part numbers.

PART 2 – PRODUCTS

2.01 GENERAL

A. Each pump shall be equipped with a submersible electric motor connected for operation on 460 volts, 3 phase, 60 Hz suitable for submersible pump applications.

B. The pumps shall be Grundfos, KSB, Sulzer, Flygt or ENGINEER-approved equal.

C. Operating Conditions**:** Capacity and Head requirements for each submersible pump shall be specified within the plans.

The WORK of this Section shall be suitable for operation under the following conditions:

Pump Name	Design Flow Capacity (gpm)	Total Dynamic Head Required (ft)	Rated HP	VFD Service	Type	Provided by
Drying Bed Drain Return Pumps	70	90	5	No	Submersible Non-Clog with Hard-Iron Impellers	Contractor

2.02 NON-CLOG TYPE

A. Pump Design: The pump shall be automatically and firmly connected to the discharge connection, guided by Sch 40 (316) stainless steel guide bars extending from the top of the station to the discharge connection. Intermediate guide rail bracket shall be provided as required by manufacturer or as shown on Plans. There shall be no need for personnel to enter the basins. Sealing of the pumping unit to the discharge connection shall be accomplished by a machined metal to metal watertight contact. Sealing of the discharge interface with a diaphragm, O-Ring, or profile gasket shall not be acceptable. No portion of the pump shall bear directly on the sump floor. It is preferable that the FEB Pumps be interchangeable with Influent Pumps for Owner redundancy and consolidation of spare parts; however, it is not required.

B. Pump Construction: Construction of the submersible non-clog pumps shall conform to the following requirements:

1. Major pump components shall be of gray cast iron, ASTM A48, Class 35B, with smooth surfaces devoid of blow holes or other irregularities. All exposed nuts or bolts shall be AISI type 316 stainless steel construction. All metal surfaces coming into contact with the pumpage, other than stainless steel or brass, shall be protected by a factory applied spray coating of acrylic dispersion zinc phosphate primer with a two-part epoxy paint finish on the exterior of the pump.
2. Sealing design shall incorporate metal-to-metal contact between machined surfaces. Critical mating surfaces where watertight sealing is required shall be machined and fitted with Nitrile or Viton rubber O-rings. Fittings will be the result of controlled compression of rubber O-rings in two planes and O-ring contact of four sides without the requirement of a specific torque limit.
3. Rectangular cross sectioned gaskets requiring specific torque limits to achieve compression shall not be considered as adequate or equal. No secondary sealing compounds, elliptical O-rings, grease, or other devices shall be used.

C. Cooling System: Each unit shall be provided with an adequately designed cooling system.

1. A stainless steel cooling jacket shall encircle the stator housing; thus, providing heat dissipation for the motor regardless of the type of installation. Impeller back vanes shall provide the necessary circulation of the cooling liquid through the water jacket. The cooling media channels and ports shall be non-clogging by virtue of their dimensions. External cooling and seal flushing shall not be required. Cooling system should be of the closed-loop. Media cooled water jackets will not be allowed.
2. The cooling system shall provide for continuous pump operation in liquid temperature of up to 104°F. Restrictions below this temperature are not acceptable.

D. Cable Entry Seal: The cable entry seal design shall not require specific torque requirements to insure a watertight and submersible seal. The cable entry shall consist of a single cylindrical elastomer grommet, flanked by washers, all having a close tolerance fit against the cable outside diameter and the entry inside diameter and compressed by the body containing a strain relief function, separate from the function of sealing the cable. The assembly shall provide ease of changing the cable when necessary using the same entry seal. The cable entry junction chamber and motor shall be separated by a terminal board, which shall isolate the interior from foreign material gaining access through the pump top. Epoxies, silicones, or other secondary sealing systems shall not be considered acceptable.

E. Motor**:**

1. The pump motor shall be induction type with a squirrel cage rotor, shell type design, housed in an air filled, watertight chamber, NEMA B type. The stator windings and stator leads shall be insulated with moisture resistant Class H insulation rated for 180°C using the trickle impregnation method to achieve a winding fill factor of at least 95%. The use of bolts, pins or other fastening devices requiring penetration of the stator housing is not acceptable. The motor shall be designed for continuous duty handling pumped media of (40°C) (104°F) and capable of up to 30 evenly spaced starts per hour. The rotor bars and short circuit rings shall be made of cast aluminum. The motor and pump shall be designed and assembled by the same manufacturer.
2. The power cable shall be sized according to the NEC and ICEA standards and shall be of sufficient length to reach the junction box without the need of any splices. The outer jacket of the cable shall be oil resistant chloroprene rubber. The motor and cable shall be capable of continuous submergence underwater without loss of watertight integrity to a depth of 25 feet.

F. Bearings: The pump shaft shall rotate on two or more permanently greased bearings. Motor bearings shall be permanently grease lubricated. The upper bearing shall be a single roller bearing. The lower bearing shall be a two row angular contact bearing to compensate for axial thrust and radial forces. Single row lower bearings are not acceptable. The minimum L10 bearing life shall be 50,000 hours at any usable portion of the pump curve.

G. Mechanical Seal:

1. Each pump shall be provided with a tandem mechanical shaft seal system consisting of two totally independent seal assemblies. The seals shall operate in a lubricant reservoir that hydrodynamically lubricates the lapped seal faces at a constant rate. The lower, primary seal unit, located between the pump and the lubricant chamber, shall contain one stationary and one rotating tungsten-carbide seal ring. The upper, secondary seal unit, located between the lubricant chamber and the motor housing, shall contain one stationary and one positively driven rotating corrosion resistant tungsten-carbide seal ring and one rotating tungsten-carbide seal ring. The rotating seal ring shall have small back-swept grooves laser inscribed upon its face to act as a pump as it rotates, returning any fluid that should enter the dry motor chamber back into the lubricant chamber. The seals shall require neither maintenance nor adjustment nor depend on direction of rotation for sealing. Shaft seals without positively driven rotating members or conventional double mechanical seals containing either a common single or double spring acting between the upper and lower seal faces are not acceptable.

2. Each pump shall be provided with a lubricant chamber for the shaft sealing system. The lubricant chamber shall be designed to prevent overfilling and to provide lubricant expansion capacity. The drain and inspection plug, with positive anti-leak seal shall be easily accessible from the outside. The seal system shall not rely upon the pumped media for lubrication. The motor shall be able to operate dry without damage while pumping under load.

H. Pump Shaft: Pump and motor shaft shall be the same unit. The pump shaft is an extension of the motor shaft. Couplings shall not be acceptable. The pump shaft shall be of stainless steel ASTM A479 S43100-T and shall be completely isolated from the pumped liquid. Maximum deflection shall not exceed 0.002" at the primary shaft seal. Shaft sleeves will not be acceptable.

I. Impeller: The impeller(s) shall be of gray cast iron, Class 40 or 35B, dynamically balanced, two vane non-clogging design having a long throughlet without acute turns. The impeller(s) shall be capable of handling fibrous materials, heavy sludge and other matter found in wastewater. Whenever possible, a full vaned, not vortex, impeller shall be used for maximum hydraulic efficiency; thus, reducing operating costs. Mass moment of inertia calculations shall be provided by the pump manufacturer upon request. Impeller(s) shall be keyed to the shaft and retained by a stainless steel bolt which must be mechanically prevented from loosening by a positively engaged ratcheting washer assembly. The backside of the impeller shall incorporate an active cutter system designed to protect the motor shaft and mechanical seal from stringy or fibrous solids. Back vanes on the impeller shall eject chopped solids to prevent them from entering the area around the seal.

1. Where required per the table above and due to high abrasive conditions, the impeller and associated insert ring shall be 25% chrome cast iron hardened to meet ASTM A532 (Alloy III A), dynamically balanced, semi-open, multi-vane, back swept, screw-shaped, non-clog design. The impeller leading edges shall be mechanically self-cleaned automatically upon each rotation as they pass across a spiral groove located on the volute suction. The leading edges of the impeller shall be hardened to Rc 60 and shall be capable of handling solids, fibrous materials, heavy sludge, and other matter normally found in wastewater. The screw shape of the impeller inlet shall provide an inducing effect for the handling of up to 5% sludge and rag-laden wastewater. The impeller to volute clearance shall be readily adjustable by the means of a single trim screw. The impeller shall be locked to the shaft, held by an impeller bolt, and shall be coated with alkyd resin primer. Coatings or other means of hardening impellers that are not integrally cast into the iron with 25% chrome iron will not be accepted.

J. Volute: Pump volute(s) shall be single-piece gray cast iron, Class 40 or 35B, non-concentric design with smooth passages large enough to pass any solids that may exit the impeller. The motor shall be attached to the volute by stainless steel bolts. The motor unit with impeller attached, shall be removable from the volute without requiring removal of the impeller and without disturbing the watertight integrity of the motor unit.

K. Flush Valve: Where required, the pump shall be equipped with a flush valve or device to flush and/or mix a pump sump automatically before discharge. The flush valve shall be mounted on the pump housing and is designed based on the ejector principle with a ball valve as the closing device. The operation is automatic and induced by the pump flow and pressure, thus eliminating the need for electrical components and cabling. A flush valve requiring the use of electricity or a timer for operation will not be accepted.

2.03 PROTECTION

A. A temperature monitor will be in each phase of the motor connected in series and set to open at 140°C. They shall be connected to the control panel and used in conjunction, and supplemental to, external motor overload protection.

B. An electrical probe leakage sensor shall be provided to detect the presence of water in the stator chamber. When activated, the relay will send an alarm to the local control panel and cause the pump to shut down (optional). The moisture sensing chamber shall have a drain/ inspection plug with a positive anti-leak seal which is easily accessible from the outside of the pump.

C. All submersible, non-clog pumps supplied for the work in this section shall be UL/FM approved for use in Class I, DIV-1 areas (Explosion-proof).

2.04 PUMP CONTROLS

A. Pumps shall be controlled in accordance with these Specifications.

PART 3 – EXECUTION

3.1 SERVICES OF MANUFACTURER

A. Inspection, Startup, and Field Adjustment: The service representative of the Manufacturer shall be present at the Site to furnish the field services required by these Specifications.

B. Services of manufacturer shall be in accordance with these Specifications.

C. Manufacturer shall define quantity of trips and days on site necessary to perform the specified services as a part of the manufacturer's scope of supply. Scope of supply shall be inclusive of travel and living expenses.

D. Upon completion of field services, representative of manufacturer shall prepare and submit a report in accordance with the requirements of these Specifications.

3.2 INSTALLATION

A. CONTRACTOR shall install the equipment in accordance with installation requirements of these Specifications.

END OF SECTION

SECTION 46 2111 – CLIMBER-TYPE BAR SCREENS

PART 1 – GENERAL

1.01 THE REQUIREMENT

A. The Manufacturer shall furnish a single packaged unit with two (2) fine bar screens, one (1) tank, one (1) control panel, one (1) rock trap, one (1) compactor-conveyor and one (1) set of related accessories required for fully automatic operation as indicated on the Drawings and as specified herein. The screens shall not become blinded by any of influent sewer debris or by Fats, Oil and Grease during operation. Screenings shall be continuously discharged by a mechanical scraper arm to the screw compactor located at grade. Entire screen and compactor maintenance shall be possible from grade. No ladders or platforms will be needed for any portion of the maintenance.

B. The Manufacturer shall certify to not less than five (5) years of experience in the application, design, construction, and operation of climber-type bar screens of the type specified in this Section. The Manufacturer shall produce a list of not less than ten (10) operating installations as evidence of meeting the experience requirement.

1.02 SUBMITTALS

A. Submittals shall be furnished in accordance with Section 01 3300 – Submittal Procedures.

1.03 OPERATION AND MAINTENANCE MANUALS

A. The Manufacturer shall provide Operation and Maintenance Manual hard copies and electronic version in PDF format for the Screens and all system components.

1.04 QUALITY ASSURANCE

A. Headworks screen shall be manufactured by Or-Tec Inc., EWS Inc., Franklin Miller, or ENGINEER-approved equal.

B. The Manufacturer shall provide a 2-year equipment warranty.

C. The climber-type bar screen specified herein shall be the design and fabrication of a single Manufacturer, which shall have the sole source responsibility for said equipment.

1.05 SPARE PARTS

A. Manufacturer shall provide all spare parts anticipated to be required for the first 2 years of operation. Manufacturer shall clearly define quantity and description of part and associated part numbers as part of Manufacturer’s scope of supply.

B. Spare parts shall be placed in a separate container clearly marked as “Spare Parts.” All parts shall be identified and clearly labeled with applicable part numbers.

PART 2 – PRODUCTS

2.01 GENERAL

A. Each bar screen shall consist of a tapered bar screen panel, two side frames, a drive motor, and two chains with multiple penetrating cushion mounted rakes. Both will be installed in a single tank and be provided with a separate rock trap and control panel.

B. Equipment shall be installed so as not to obstruct the flow of sewage to bar screen.

C. Screen components including shapes, pipes, sheets, side frames and guides, bar rack, rake assembly, scraper assembly, shafting, discharge chute, fasteners, and anchor bolts shall be manufactured from type 304 stainless steel. The screen shall be installed in type 304 stainless steel tank with inlet flange, outlet flange, overflow weir, and level sensor threaded fittings.

D. The tank overflow weir shall allow waste to flow directly to the outlet during overflow events.

E. A rock trap shall be mounted prior to the inlet of the screen tank.

F. Screen selection shall be based on the manufacturer's recommendation, to provide the best possible, most economical performance and mechanical solutions that meet or exceed specified application data:

Screen Opening:	¼"
Screen Angle:	75°
Peak Flow:	270,000 GPD
Wastewater:	Standard Municipal 200-500 mg/L TSS
Motor:	3Ø, 230/460Volt, 60hz

2.02 BAR SCREEN

A. Screen panel face shall consist of a parallel array of tapered bars with even, ¼" spacing between them. Screen bars shall be readily replaceable individually from the front of the screen without the need to remove the screen from the wastewater channel. All material for tapered bars, spacer beams, screenings lead plate, and support beams shall be of 304 stainless steel. The tapered bar screen panel shall be mounted and bolted between a pair of side frames.

B. The screen shall be a self-cleaning system using only the penetrating rake teeth to fully clean the gaps between the tapered bars and keep the screen operational.

C. No wash water shall be required by the screen.

D. The opening between the screen bars shall be able to be field modified to different size opening in the future with the use of a bar spacing kit.

2.03 SIDE FRAMES

A. A pair of side frames shall support the tapered bar screen panel between them. Bearings for head sprockets and bushings for tail sprockets with head and tail shafts shall be mounted on them. Frames shall be made of 304 stainless steel plate of sufficient thickness to prevent deflection.

2.04 CHAINS, RAKES, AND SPROCKETS

A. Rakes shall travel up the screen face, cleaning the screen opening with their penetrating teeth, while lifting captured solids to the top of the machine. The rakes shall be mounted on the chains on both sides of the side frames using cushion mounted brackets. The cushion mounted brackets shall enable the rakes to rotate 60-90° backwards should any blockage occur, and then return to their position between tapered bars.

B. The rakes shall travel approximately 12-15 feet/min. The rakes shall be chain mounted at no greater than 36" intervals.

C. Rake assembly shall be guided over the discharge chute and the accumulated debris shall be removed by a scraper attached to the side frames. Scraper shall be designed to pivot to achieve effected cleaning of bar screen openings with the rake. Rake scraper shall be of 304 stainless steel.

D. Discharge material from screen shall be directed to a tapered chute providing a smooth transition from bar screen discharge to the screw compactor. Chute shall have a minimum slope of 55° and shall be of 304 stainless steel.

E. Screen shall be capable of operating based on level sensor or I/O. Screen shall also be capable of operating continuously (24/7) when there is a continuous flow present if required.

2.05 DRIVE MOTORS

A. Equipment shall be provided complete with drive motors of totally enclosed geared induction type. A torque limiter combined with limit switch shall be provided between the motor and the head shaft in order to disconnect mechanical power in emergency situations.

B. System shall use two 1/6hp, 3Ø, 230/460Volt, 60hz motors, one per screen.

2.06 SCREEN TANK

A. The screen will be supplied with a stainless steel, structural tank which will support and contain the screen. The screen tank shall be self-emptying and fabricated from 11 gauge 304 stainless steel.

B. The two (2) screen inlets shall be a 6” flange and the one (1) screen outlet shall be 10” flanged.

C. The screen tank shall include an internal wall that is to act as an overflow weir as well as to allow screens to seal to the side, allowing no flow past the screens.

2.07 SCREW CONVEYOR COMPACTOR

A. The screening unit will be supplied with a screw compactor which will convey and dewatered the removed screenings. The drain pan and intermittent wash water shall drain to the screen inlet.

B. System shall use one 2hp, 3Ø, 230/460Volt, 60hz motor.

C. The Compactor shall be provided with a wash water supply connection for a maximum allowable 10 gpm sporadic usage.

D. Discharged screenings shall be of adequate dryness to pass the paint filter liquids test for landfill disposal.

2.08 LEVEL SENSORS

A. Four (4) level sensors shall be installed in the screen tank with the following functional parameters:
   1. High: Screen-On / High-High Alarm.
   2. Each side of the tank shall have two (2) sensors to control the accompanying screen.

2.09 ROCK TRAP

A. One (1) rock trap shall be supplied to be mounted at the inlet of the screen tank. The rock trap shall have a 6” inlet and 6” outlet flange. The rock trap shall be of 304 stainless steel and shall include a perforated 304 stainless steel basket.

B. The rock trap shall include a stainless-steel hinged cover and a support stand to bring outlet to level with the screen tank inlet.

2.10 CONTROL PANEL

A. The control panel shall be a NEMA 4X enclosures suitable for outdoor use and shall contain all electrical controls, wires, starters, terminals, relays, overloads, fuses, and labels required for operation of the screen and ancillary equipment described herein.

B. The system shall be fully operational in both manual and automatic modes. The system mode selector switch shall allow the operator to select the desired mode. No other changes or programming by the operator shall be required.

C. In manual mode, the screen will start and operate until it is turned off. In automatic mode, the system will turn on based on a signal from the level sensor provided or operate continuously if there is continuous flow to the screen. When using level sensors or I/O the screen will operate for one minute based on the signal. If at the end of one minute the signal from the level sensor is still made the screen will operate for one more minute. When the level sensor in no longer made the screen will turn off and wait for the next signal.

D. Timers in the panel will allow operator to easily change the on/off period of the compactor washer wash systems.

E. The front of the control panel door shall include a main disconnect breaker switch (power on/off). In the off position all power to the control panel shall be off. An electronic current overload relay overload shall continuously monitor the screen motor and shall alarm the panel in the event of an over current draw.

F. The control panel shall contain the following switches:
   1. NEMA 4X stainless steel outdoor duty enclosure housing.
   2. Main disconnect, "thru the door" with door interlock.
   3. Full voltage non-reversing motor starter (IEC).
   4. Control transformer with primary and secondary fusing.
   5. Control power on/reset push button.
   6. Screen running green pilot light.
   7. General Red Fault Alarm.
   8. Screen Hand/Off/Automatic Switch
   9. Electronic Over Current Relay.
   10. Elapsed time meter.
   11. Lot, control relays, terminal blocks, and related accessories.
   12. E-Stop mushroom red pushbutton with twist reset.
   13. UL Listed Enclosure suitable for wall mounting.
   14. Dry contact outputs for Screen Run, General Fault, Over Current.

G. All switches and switching functions shall be clearly indicated by suitably engraved labels.

PART 3 – EXECUTION

3.01 MANUFACTURER'S SERVICES

A. Inspection, Startup, and Field Adjustment: The service representative of the Manufacturer shall be present at the Site to furnish the field services required as specified herein.

B. Manufacturer shall define quantity of trips and days on site necessary to perform the specified services as a part of the Manufacturer's scope of supply. Scope of supply shall be inclusive of travel and living expenses.

C. Upon completion of field services, the representative of the Manufacturer shall prepare and submit a report in accordance with the requirements of these Specifications.

3.02 INSTALLATION

A. Contractor shall install the equipment in accordance with installation requirements of these Specifications.

END OF SECTION

SECTION 46 36 53 – CHEMICAL TABLET FEEDING EQUIPMENT

PART 1 – GENERAL

1.01 THE REQUIREMENT

A. The Contractor shall furnish and install, complete and operable, new factory-built tablet erosion chemical feeding equipment with all necessary parts and accessories.

B. Unless specifically indicated otherwise, the arrangement of equipment shown on the Drawings is based upon information available at the time of design and is not intended to show exact dimensions particular to a specific

1.02 SUBMITTALS

A. Submittals shall be furnished in accordance with the requirements of Section 01 33 00 – Submittal Procedures.

B. Product Data:
   1. Contractor shall supply one (1) electronic copy of submittal data.
   2. Component data and shop drawings of the system shall be supplied, including dimensions, weight, dimensions, and parts list.
   3. Cut sheets of the Manufacturer's recommended chemical tablets, including tablet dimensions, dry weight, and chemical percent availability.

1.03 OPERATION AND MAINTENANCE MANUALS

A. The Manufacturer shall provide Operation and Maintenance Manual hard copies and electronic version in PDF format for the polymer blending and feed equipment and all system components.

1.04 QUALITY ASSURANCE

A. Manufacturer shall have minimum five years' experience in manufacturing chemical tablet feed systems.

B. Manufacturer shall provide a 2-year equipment warranty.

C. Contractor shall obtain all equipment provided under this Section from a single supplier or manufacturer who shall assume full responsibility for the completeness and proper installation of the chemical feed equipment.

1.05 SPARE PARTS

A. Manufacturer shall provide all spare parts anticipated to be required for the first 2 years of operation. Manufacturer shall clearly define quantity and description of part and associated part numbers as part of Manufacturer's scope of supply.

B. Spare parts shall be placed in a separate container clearly marked as "Spare Parts." All parts shall be identified and clearly labeled with applicable part numbers.

PART 2 – PRODUCTS

2.01 CHLORINATION TABLET FEED EQUIPMENT

A. Contractor shall provide one (1) flow rate proportional chemical tablet feeder unit to provide chlorination to the treatment plant effluent. The equipment shall be sized to handle an average daily flow of 90,000 gallons.

B. The feeder shall be for installation outdoors, in-line with treatment accomplished by immersion of vertically stacked chemical tablets. The tablet feeder shall be equipped with a self-draining contact area to allow for a complete dry down during no flow conditions. The tablet feeder hopper shall be sized to hold at least 40 tablets to reduce the frequency of refills. The inlet/outlet hubs shall be sized to allow direct piping of SCH 80 PVC as shown on the Contract Drawings.

C. Chlorination shall be provided through the use of calcium hypochlorite tablets with at least 70% available chlorine upon dissolution.

2.02 DE-CHLORINATION TABLET FEED EQUIPMENT

A. Contractor shall provide one (1) flow rate proportional chemical tablet feeder unit to provide de-chlorination to treatment plant effluent. The de-chlorination feeder shall be located downstream of the chlorination equipment as shown on the Contract Drawings. The equipment shall be sized to handle daily flows up to 90,000 gallons per day.

B. The feeder shall be for installation outdoors, in-line with treatment accomplished by immersion of vertically stacked chemical tablets. The tablet feeder shall be equipped with a self-draining contact area to allow for a complete dry down during no flow conditions. The tablet feeder hopper shall be sized to hold at least 40 tablets to reduce the frequency of refills. The inlet/outlet hubs shall be sized to allow direct piping of SCH 80 PVC as shown on the Contract Drawings.

C. De-chlorination shall be provided through the use of either:
   1. Ascorbic acid tablets with at least 75% available ascorbic acid upon dissolution; or
   2. Sodium sulfite tablets with at least 92% bioavailability upon dissolution.

2.03 MANUFACTURERS

A. Chemical Tablet Feeder Acceptable Manufacturers:
   1. Norweco;
   2. Accutab;
   3. Or ENGINEER-approved equal.

PART 3 – EXECUTION

3.01 MANUFACTURER'S SERVICES

A. Services of the Manufacturer shall be in accordance with these Specifications.

3.02 INSTALLATION

A. Contractor shall install the equipment in accordance with installation requirements of these Specifications.

B. The Contractor shall install the specified equipment per the Contract Documents and Manufacturer's recommendations.

END OF SECTION

SECTION 46 5353 – SEQUENCING BATCH REACTOR PROCESS EQUIPMENT

PART 1 - GENERAL

1.01 THE REQUIREMENT

A. The Contractor shall assign full responsibility for the functional operation of all Sequencing Batch Reactor (SBR) System components to a Single Source Supplier. This Section covers the work necessary of the SBR Manufacturer to furnish, inspect the installing contractor's equipment installation and connections, calibrate, and place into operation the SBR System along with all other supporting equipment and accessories as specified herein.

B. American Iron and Steel (AIS) requirements apply to this Section. All iron and steel products used in this project must be produced in the United States in accordance with the Consolidated Appropriations Act, 2014.

C. System Source & Quality Assurance:

The SBR System shall be supplied by accompany of good reputation that is regularly engaged in the manufacture and fabrication of SBR wastewater treatment systems. The manufacturer's experience shall include a minimum of ten (10) installations where equipment of similar size and design has been in operation successfully in a similar process for a minimum of five (5) years. The supplier shall supply the following components: mixers, decanters, diffusers, pumps, actuators, valves, instrumentation, and controls as specified herein.

D. Electrically Actuated Valve Quality Assurance

Actuated valves shall be tested prior to shipment. Testing shall consist of the following:

1. Project and nameplate data verification per assembly documentation
2. Limit switch and torque switch setup and cycle test
3. Hydrostatic test (two pressurization cycles) for all plug and butterfly valves

E. Control Panel Quality Assurance

All Control Panels shall be UL certified. Testing by manufacturer's electrical engineering prior to releasing for shipment shall be completed. Testing shall consist of the following:

1. Point to point testing of all wiring prior to application of power
2. Intended supply voltage shall be applied to the enclosure
3. All components shall be tested for proper operation and calibration
4. The PLC and operator interface program shall be loaded and functionally checked
5. All components shall be checked to confirm proper mounting specifications have been followed
6. Enclosure shall be inspected for defects and repaired if necessary
7. All labeling of wires and devices are correct properly and clean
8. The manufacturer shall finalize the factory panel checkout by completing a control checklist to document all testing completed above. This document must be signed by a professional electrical engineer.

F. System Operation and Maintenance Manual

Complete system Operation and Maintenance manuals shall be available in hardcopy and electronic form. The electronic form shall be provided in pdf format and be fully bookmarked. Manuals shall address:

1. General project information
2. Installation and start up
3. Process design and operational control description
4. Mechanical, electrical, and field instrumentation component descriptions

5. Maintenance and trouble shooting
6. Mechanical and electrical drawings

G. Motor Compliance

Motors shall follow the Energy Independence and Security Act of 2007 (EISA 2007). The SBR area electrical classification shall be Non-classified. Motors within the basin shall be rated for a temperature code T2A (280°C).

H. Installation

The installation of the equipment furnished by the manufacturer shall be the responsibility of the installing contractor in accordance with all requirements of the contract documents.

I. Specification Precedence

The specifications for equipment and controls under this Section supersede specifications for equipment and controls specified elsewhere in the contract documents and drawings. Purchased components such as gear reducers, pumps, motors, valves, and actuators shall be provided with standard recommended manufacturers paint, unless otherwise specified within this Section.

J. Service

The equipment manufacturer shall furnish the services of a factory trained representative for a maximum of three trips and twelve (12), eight-hour days at the jobsite to inspect the installing contractor's equipment installation, supervise the initial operation of the equipment, instruct the plant operating personnel in a proper operation and maintenance, and provide process assistance. If additional service is required due to the mechanisms not being fully operational, at the time of service requested by the contractor, the additional service days will be at the contractor's expense.

K. Performance Guarantee

The single source supplier of the SBR System equipment shall provide a written Process Performance Guarantee to guarantee the SBR System will meet the effluent criteria specified under this Specification Section. The guarantee period shall commence at time of plant single basin start-up, once the system has reached equilibrium (or within six months of equipment shipment, whichever comes first), and shall be in force for a period of one year. The Process Performance Guarantee shall be submitted as part of the engineer's submittal data.

L. Warranty

The manufacturer shall provide a written warranty against defects in materials and workmanship. Manufacturer shall warrant the goods provided by the Manufacturer to be free from defects in materials and workmanship under normal conditions and use for a period of one (1) year from the date the single-basin equipment is put into service, or eighteen (18) months from shipment of equipment, whichever comes first. This warranty shall not apply to any goods or parts which have been altered, applied, operated, or installed contrary to the Manufacturer's instructions or subjected to misuse, chemical attack or degradation, negligence, or accident.

M. Approved Manufacturers:
1. Aqua-Aerobic Systems, Inc.
2. Fluidyne Corporation
3. Parkson Corporation
4. OR ENGINEER-approved equal.

PART 2 - PRODUCTS

1.02 PERFORMANCE REQUIREMENTS

A. The manufacturer of the SBR system shall be completely responsible for the proper design and integration of their system, including but not limited to; diffused aeration equipment, blowers, pumps, mixers, decanters, valves, and controls. In addition, the SBR manufacturer shall be responsible for providing and integrating local control panels. The equipment and controls in one SBR basin shall be of the same make and model as in the other SBR basin. All equipment shall perform as specified and the completed installation shall operate in accordance with the requirements of the plans and specifications.

B. Site Specific Conditions:

90,000 gpd	Average daily flow
135,000 gpd	Maximum daily flow
270,000 gpd	Peak Hourly flow of 2-hour(s) duration

Loadings	**Influent**	**Effluent**
BOD	360 mg/l	10 mg/l
TSS	250 mg/l	10 mg/l
TKN	40 mg/l	4 mg/l
Total Nitrogen	-- mg/	10 mg/l
Phosphorus	8 mg/l	-- mg/l

Wastewater temperature	50°F to 68°F
Jobsite elevation	4,700 feet MSL
Ambient air temperature	30°F to 100°F
Alpha (maximum value allowed)	0.85
Beta (maximum value allowed)	0.95
F/M ratio	0.16 lb BOD_5/lb MLSS – Day
Max MLSS at low water level	3,500 mg/l
Maximum Cycles at Max. Daily Flow	5/day/basin
Oxygen Requirements	1.25 lbs O2/lb BOD_5 applied 4.6 lbs O2/lb TKN applied
Minimum Aeration Time	2.15 hrs/cycle at maximum daily flow
Minimum Mixing Time	2.99 hrs/cycle at maximum daily flow
Minimum Settling Time	0.75 hrs/cycle at maximum daily flow

C. The SBR cycle structure is based on a timer system with basin level overrides. The cycle structure shall remain constant up to the maximum daily flow. Advancing cycles prior to the maximum daily flow is not acceptable.

1.03 EQUIPMENT

A. Structures:

1. The SBR shall be field erected in two (2) rectangular cast-in-place concrete basins as shown on the contract drawings and summarized below:

Basin Width:	18.0 feet
Basin Length:	36.0 feet
Basin Height:	17.0 feet
Empty Tank volume:	74,616 gallons
Design Operating Volume	56,178 gallons
Type of liquid:	Activated sludge
Max. Dry matter content:	3,500 MLSS
Minimum Operating Level:	10.5 ft. SWD
Maximum Operating Level:	14.0 ft. SWD

2. The Aerobic Digester basin shall be field erected as shown on the contract drawings and summarized below:

Basin Width	10.83 feet
Basin Length	20.0 feet
Basin Height:	17.0 feet
Minimum Operating Level	9.8 feet SWD
Maximum Operating Level	14.0 feet SWD

3. The Post-Equalization/Holding basin shall be field erected as shown on the contract drawings and summarized below:

Basin Width	7.2 feet
Basin Length	20 feet
Basin Height:	17.0 feet
Minimum Operating Level	0 feet SWD
Maximum Operating Level	9.3 feet SWD

B. Influent Plug Valve(s):

1. Furnish two (2), 10-inch diameter electrically operated flanged plug valve, one for each basin, to control the influent flow. Valves shall be a 125# flanged end connection, ASTM A126 Class B cast iron body with welded in nickel seat, EPDM coated ductile iron plug, assembled, and tested with 230-volt, single phase, 60 Hz cycle open/close service electric actuator. The valve shall be a non-lubricated type with a port area of at least 80% of full pipe size. Valve actuator shall be provided in accordance with these Specifications.

2. Each valve shall include a manual override with limit switch feedback to the micro-processor in both the open and closed positions. Field wiring and junction/box disconnect shall be provided by the installing contractor. Provisions for valve access shall be provided by the installing contractor.

C. Submersible Direct Drive Mixer(s):

1. Furnish one (1) close-coupled, submersible type direct drive mixer for each basin, as shown on the project drawings. All components of the mixer, including the motor, shall provide continuous underwater operation while the mixer blades are completely submerged. Mixer unit shall be approved according to UL standards. The mixer shall be capable of handling typical domestic raw, screened sewage with normal concentrations of rags, strings, and sand/grit. A guide rail system shall be used to support each mixer during operation and to guide the units during installation and lubrication/preventative maintenance inspection. The system shall consist of a bottom-bearing console, stop bracket, or stop console, guide pipe, fixing bracket and guide holder assembly. All major components shall be fabricated of 316 stainless steel.

2. Mixer selection shall be based on the manufacturer's recommendation, to provide the best possible, most economical performance and mechanical solutions that meet or exceed specified application data:

Tank I.D.	SBR Tanks
No. of tanks:	2
Phase/Voltage/Hz:	3ph/460V/60Hz
Maximum propeller RPM:	900
Propeller diameter, inches:	13
No. of propeller blades:	2
Propeller material:	316 Stainless steel
FLA, Amps:	6.0
Maximum weight, lbs.:	150

D. Decanter Assembly:

1. Furnish one (1) new mechanical floating decanter and related equipment accessories as described herein for each basin. Each decanter shall be capable of chasing the sludge blanket; be solids excluding to minimize entrance of mixed liquor into the decanter during the SBR aeration and mixing stages; and be designed with submerged supernatant inlet to minimize induction of scum and floatable solids. Two positive means of sealing the decanter shall be provided. Each decanter shall be capable of withdrawing decant fluid from 4-6 inches beneath the liquid surface, regardless of liquid depth, down to the minimum allowable water level specified below.
    a. Maximum allowable water level in the basin during normal operation is 14 ft.
    b. Maximum allowable water level in the basin during occasional storm flow event 16 ft.
    c. Minimum allowable water level in the basin is 10.5 ft.
    d. The decant pipe must be located 1 ft. below the LWL by the installing contractor.
    e. Each decanter shall be rated for an average flow of 211 gallons per minute.

2. The weir shall include vortex control baffles permanently affixed to the weir. The weir shall be attached to the actuator through a single shaft or linkage which shall also function as the torque restraint. The actuator shall be capable of operating with a closing force of 1,500 lbs. and shall operate from a 115-volt, single phase, 60 hertz power source. Adjustable limit switches shall be included to permit adjustment of the weir opening. A corrosion-resistant removable cover shall be included to provide protection to the actuator and motor during normal operation. The power section is 304 stainless steel. #14 AWG ten-conductor power cable shall be provided from the NEMA 4X junction box of the unit to the basin wall. Supply of junction box/disconnect at the basin wall shall be the responsibility of the installing contractor.

3. Each unit shall be equipped with a modular float filled with closed cell polyurethane foam having a minimum 2.0 lbs./ft3 density. Float shall be completely sealed to prevent the foam from being in contact with the external environment. Float shall have adequate reserve buoyancy as specified within this Section to ensure stability and to provide support flotation required during decanter servicing. A urethane type seal shall be molded into the bottom of the float assembly to receive the decanter weir.

4. Each decanter shall include a discharge hose of sufficient size to permit vertical movement of the decanter and provide sufficient capacity to handle the design decant flow rate. Discharge hose shall be an EPDM tube, tire chord braided with helix wire reinforcement. A flanged end 90-degree elbow shall be provided. Proper flanged connections to the decanter and the discharge point shall be provided for trouble free operation while permitting a means for disconnecting for service. Through-the-wall pipe, gaskets, and hardware beyond the 90-degree elbow shall be provided by the installing contractor. The installing contractor shall provide a ¾" valve with hose bib connection on the decant line between the decanter and the decant valve.

5. Each decanter shall include a restraint and support system to secure the decanter in its designate location within the basin and to support the decanter when the basin is empty. Furnished as part of the decanter assembly shall be a mooring frame, which shall permit the assembly to move up and down following the change in liquid level while restrained within the vertical pylons.

6. Each decanter shall be moored with a restrained mooring system consisting of vertical pylon(s) with base plate and/or supports as specified above. Each pylon/support with base plate shall be attached to the basin floor and filled with concrete by the installing contractor. Mooring post supports, if specified within this Section shall be provided for attachment to the basin wall by the installing contractor. The restrained and support system shall be construction of 304 stainless steel or hot-dip galvanize after fabrication.

7. Furnish one (1), 6" diameter electrically operated butterfly valve for each basin to control the decant rate. The modulating valve shall be controlled by the SBR control panel PLC. The valves and the electric valve actuator shall be provided in accordance with these Specifications, and rated for modulating service. Valve actuator shall include motor winding protection, manual override, and limit switch feedback in the open and closed position. Field wiring and junction/box disconnect shall be provided by the installing contractor. Systems not including decant valves are not acceptable.

E. Retrievable Fine Bubble Air Diffuser Assemblies

1. The aeration system shall be a fine bubble diffused air system and shall be a retrievable configuration as shown on the contract drawings. Each assembly shall consist of membrane tube diffusers, frame assembly, manifold, track/beam, isolation valves, and lifting mechanism. The aeration system shall be designed to provide oxygen distribution to the entire basin. Duplex diffuser tubes total that specified herein shall be provided for each diffuser rack. No change in the basin geometry shall be allowed. The velocity and mixing in the basin shall be sufficient to ensure complete biological solids suspension and dispersion.

2. The aeration system for the aeration basins shall be capable of providing mixing such that when operated under any combination of the specified design conditions it shall suspend all biological floc and mixed liquor suspended solids throughout the liquid mass in each basin. The aeration system shall further be capable of maintaining complete aerobic conditions and suspension of all biological floc and suspended solids throughout the liquid mass in each basin. The aeration system shall be designed to operate within a minimum of 10.5 feet and a maximum of 14 feet side water. depth and shall be capable of transferring a minimum of 36.4 lbs/hr of process oxygen (A.O.R.) into the wastewater.

3. In addition, the aeration system shall be designed to transfer the following minimum amount of oxygen per day at standard conditions in clean water, at the specified submergence, air rate, and pressure.

Minimum Air Rate (scfm per basin)	269
Pressure @ Top of Drop Pipe (psig)	7.85
Diffuser Submergence (ft.)	13.45
Maximum Diffuser Rack Size	16 Duplex tubes

4. Air diffuser assemblies shall be of the tubular, non-clog, non-buoyant. fine bubble type with a flexible perforated air release membrane. The diffuser membrane shall be constructed from EPDM rubber and be suitable for continuous or intermittent aeration. Each membrane shall be held in place by 304 stainless steel band clamps. The membrane shall include UV inhibitor and compounds designed for resistance to chemical attack, weathering, fatigue, and aging. The diffuser assemblies shall have double backflow prevention to prevent liquid from passing into the aeration header. The membrane exterior surface shall be smooth as to inhibit biological film growth. The membrane shall inflate during aeration and deflate when the airflow is discontinued, further restricting biological film growth. The membrane shall be cleanable in place with water from a high-pressure wash. Each diffuser membrane shall be supported over its' full length and circumference by a support tube.

5. Each assembly shall include a diffuser hoist assembly with base socket to receive a portable electric winch. A total of one (1) portable electric winch shall be provided for the diffuser assemblies. The winch mechanism shall be of sufficient design capacity to raise the diffuser rack assembly to the servicing position. The portable electric winch shall operate from a single phase, electrical supply. The winch shall be provided with a total of 12 feet of electrical cable. Supply of electrical power supply, wiring and junction box for winch shall be the responsibility of the installing contractor. The lifting mechanism shall consist of a hoist, guide wheels, stainless steel sheave with bronze bushing, and 304 stainless steel lifting cable. The lifting mechanism shall be of sufficient design capacity to raise the diffuser rack assembly to the servicing position. In addition, the mechanism shall be designed to allow the diffuser rack to be pivoted 360° when in the service position for ease of diffuser inspection and servicing.

6. Each diffuser assembly shall include a 3" diameter wire reinforced EPDM flexible air line and a 3" diameter manually operated isolation butterfly valve with quick disconnect end fittings, and a threaded flange, elbow and quick disconnect adapters. All air distribution piping, gaskets, and hardware beyond the threaded flange shall be supplied by the installing contractor. The vertical track/beam shall support the lifting mechanism assembly during operation and servicing. The valves shall be provided in accordance with these Specifications. Routing the air header to the basins and anchoring the diffuser assemblies to the basin shall be the responsibility of the installing contractor.

F. Fixed Coarse Bubble Diffuser System

1. The aeration system for the Digester shall be a coarse bubble diffused air system and shall be a fixed configuration as shown on the contract drawings.

   Airflow per basin: 113 SCFM
   Riser Pipe Diameter: 3 inches
   Diffuser Material: Schedule 80 PVC

2. Furnish one (1) fixed coarse bubble diffuser system for the digester basin. The diffuser system shall consist of diffusers, supports, manifold, and riser pipe. Diffuser pipes shall be not less than three-inch nominal diameter. Each diffuser section shall be supplied with uniformly-spaced machined orifices located on the top of each section. Size and number of orifices shall be provided to ensure a uniform air distribution.

3. Each diffuser section (and manifold pipe) shall be supported at span lengths not greater than 6 feet by supports. No unsupported end shall be longer than 2 ft. Diffuser sections shall be secured to the supports with a corrosion resistant retainer. Support brackets shall be adjustable to provide header leveling within ± 1/4 inch of a fixed elevation for each aeration basin.

4. Diffuser system shall be field assembled by the installing contractor. All submerged PVC joints 8" and smaller shall be socket welded joints. Expansion joints shall be included to compensate for thermal expansion for PVC manifold runs longer than 40 feet. Pipe sizing, location and supports shall be as shown on the drawings. Diffuser sections and internal manifold piping shall have flange connections for disassembly. The riser pipe shall terminate in a flanged connection at the top of the basin wall. All piping, gaskets, and hardware beyond the riser pipe's flanged connection shall be the provided by the installing contractor. Attachment to the basin shall be the responsibility of the installing contractor

G. Blowers

1. Furnish three phase rotary lobe type, positive displacement blowers as described below with premium efficient, T.E.F.C., Class F insulation, Teco, Siemens, or equal motor. The blowers shall be manifolded for individual and/or combined operation. Blowers shall be suitable for operation under the following site conditions:

Elevation:	5,066 Ft. A.S.L.	**Process Gas:**	Air
Ambient Pressure:	13 PSIA	**K-Value:**	1.4
Design Ambient Temp.:	100F	**Specific Gravity:**	1.0
Inlet Pressure:	12 PSIA	**Allowable Blower Package Noise:**	75 dB(A) @ 1-Meter
Inlet Temperature:	100F	**Supply Voltage:**	460 VAC

Blower Quantity:	4
Motor Size:	20 HP (SBR Aeration) (3) 7.5 HP (Digester) (1)
Blower Airflow Rate:	269 SCFM (SBR Aeration) 113 SCFM (Digester)
Discharge Pressure:	7.63 PSIG (SBR Aeration) 6.63 PSIG (Digester)
Discharge Isolation Valve Size:	3 inches (SBR Aeration) 2 inches (Digester)
VFD Control:	Yes (SBR Aeration) No (Digester)

2. Each blower assembly shall be complete and mounted on a base weldment with four corner anti-vibration mountings, designed for direct application on a concrete slab or other solid foundation. Each assembly shall be suitable for shipment as a complete unit, factory assembled (less discharge pipe fittings) as much as possible to facilitate shipping and handling. Equipment shall include a blower, electric motor, belts and sheaves, inlet package, discharge silencer, discharge check valve, rubber inlet sleeve and discharge connection, pressure relief valve, butterfly discharge isolation valve, discharge pressure gauge, and rubber expansion joint. A personnel protection guard shall be included over the belts and sheaves.

3. A sound enclosure shall be provided for each blower package to help reduce the resultant noise level. The sound enclosure shall encompass the entire blower package for maximum noise attenuation. The enclosure shall be constructed of durable powder coated carbon steel with a sound absorbing internal surface. The walls and ceilings shall be shop assembled with all corners and joints properly insulated to prevent noise leakage and maintain the attenuation levels of the room. The blower package and sound enclosure shall ship as a unitized one-piece assembly. Maintenance access doors shall be provided to facilitate servicing of the blower package. A baffled inlet shall be provided to allow supply and cooling air to enter the enclosure during the operation of the blower. An exhaust fan sized for proper enclosure ventilation will be supplied.

4. Furnish two (2) electrically actuated butterfly valve(s) as shown on the plans to direct the blower airflow to the appropriate basin. The valves shall be provided in accordance with these Specifications. Provisions for valve access shall be provided by the installing contractor.

H. Sludge Wasting Pump

1. Furnish one (1) submersible non-clog pump for each basin as specified herein. Each pump shall be equipped with a submersible electrical motor connected for three phase operation. Pump housing shall be painted cast iron. Pump shall include an adequate length of multi-conductor chloroprene jacketed type SPC cable suitable for submersible pump applications. The power cable shall also be sized according to NEC and ICEA standards. The pump shall be supplied with a mating cast iron discharge elbow. Each unit shall be fitted with an adequate length of steel lifting chain of adequate strength to permit raising and lowering the pump.

Quantity:	1 per basin
Pump Function:	Sludge
Motor Size:	1.8 HP
Pump Flow Rate:	20 GPM @ 15 ft TDH
Discharge Size:	2”

2. The pump shall be capable of handling raw, unscreened sewage. The discharge connection elbow shall be permanently installed with the discharge piping. The pump shall be automatically connected to the discharge connection elbow when lowered into place, and shall be easily removed for inspection or service. There shall be no need for personnel to enter the basin to service the pump. Sealing of the pumping unit to the discharge connection elbow shall be accomplished by a simple linear downward motion of the pump.

3. An upper guide bar bracket shall be provided with each pump. The entire weight of the pumping unit shall follow guide bars into the operating position and pressed tightly against the discharge connection elbow with metal-to-metal contact. The pump, with its appurtenances and cable, shall be capable of continuous submergence underwater without loss of watertight integrity to a depth of 65 ft. Supply of all discharge piping, supports, gaskets, and hardware beyond the flanged connection specified above shall be the responsibility of the installing contractor. The pump shall be removed with the portable crane arm.

4. Each pump shall include a discharge check valve and plug valve to control the design transfer flow rate. The plug valve shall be a non-lubricated type with a port area of at least 80% of full pipe size in accordance with these Specifications. Valve(s) shall be provided loose for installation within the discharge piping by the installing contractor. Valve gaskets and hardware shall be supplied by the installing contractor. Field attachment of the pump to the basin shall be the responsibility of the installing contractor.

I. Post-EQ Flow Control Valve

Furnish one (1), 6" diameter electrically operated butterfly valve to control the effluent discharge rate. The modulating valve shall be controlled by the SBR control panel PLC. The valves and the electric valve actuator shall be provided in accordance with these Specifications, and rated for modulating service. Valve actuator shall include motor winding protection, manual override, and limit switch feedback in the open and closed position. Field wiring and junction/box disconnect shall be provided by the installing contractor. Systems not including decant valves are not acceptable.

J. Post-EQ Effluent Flow Meter

One effluent flow meter shall be provided to monitor the effluent discharge rate. The 6” electromagnetic flow meter shall be Krohne, Toshiba, or ENGINEER-approved equal. Output shall be 4-20 mA. The flow meter shall be provided loose to be installed and wired by the installing contractor.

K. Removable Crane Arm System

One portable crane arm assembly shall be provided to easily raise and lower all mixers and pumps within the SBR basin for installation and inspection. It shall consist of a crane arm with telescopic capabilities, rotatable at 360º, a hand winch with brake for load control with stainless steel wire, a hook, and an intermediate piece. The assembly shall be positioned directly into the guide pipe receptacle. All crane base guides shall be located so that multiple pieces of equipment can be removed from a single base.

L. Dissolved Oxygen Controller

Furnish one (1) dissolve oxygen controller per basin (ABB AWT440 or approved equal). The controller shall receive the digital input from a maximum of two devices. The controller will communicate with the main PLC via 4-20 mA signals. The controller will have a NEMA 4X/IP66 metal enclosure with a corrosion-resistant finish and shall be AC powered from a 100-230VAC, 60Hz power source.

M. Dissolved Oxygen Sensors

Furnish one (1) dissolved oxygen sensor per basin (Aztec ADS420 or approved equal). The probe shall be a continuous-reading probe utilizing luminescent sensor technology, and shall provide electrolyte-free operation without requiring sample conditioning. Sensors shall be suspended on a removable mounting pipe assembly. 304 stainless steel pipe, 304 stainless supports and 304 stainless steel anchors shall be provided. Field attachment of the pipe and supports to the basin shall be the responsibility of the installing contractor. Field wiring, conduit, and installation of cable shall be the responsibility of the installing contractor.

N. Pressure Transducer

Furnish one (1) submersible pressure transducer unit constructed of stainless steel for each basin (Keller Levelrat or ENGINEER-approved equal). Transducer shall utilize a diffused silicone semiconductor sensor protected by an integral stainless-steel diaphragm with seal fluid. Transducer output shall be a 4-20 mA signal. Electrical connection shall be 2-wire, loop powered through a shielded integral cable comprised of 22 AWG conductors and separate drain wire. Transducers shall be suspended on a removable mounting pipe assembly. 304 stainless steel pipe, 304 stainless supports and 304 stainless steel anchors shall be provided. Field attachment of the pipe and supports to the basin shall be the responsibility of the installing contractor. A moisture excluding aneroid bellows shall be supplied loose for installation in the junction box/ disconnect. Attachment and supply of the junction box/disconnect at the basin wall shall be the responsibility of the installing contractor.

O. Level Sensors

Furnish one (1) level sensor assembly consisting of a float switch with a smooth, chemical resistant polypropylene casing, and 316 stainless steel mounting brackets for each basin (Anchor Scientific model GSI 40NONC or approved equal). Each float switch shall be provided with a three-conductor electrical cable. Electrical cable shall terminate at a junction box/disconnect located at the basin wall. Field wiring and junction box/disconnect shall be provided by the installing contractor. Adhesive anchors of 304 stainless steel shall be provided for anchoring the level sensor mounting bracket.

P. SBR Control Panel with Motor Starters

1. The control system (i.e., SBR PLC) shall be designed to optimize the SBR process while minimizing operator attention and to accommodate the continuous maximum daily flow without adjusting cycle structures. The SBR PLC shall be programmed to accept and/or control other field instruments and equipment for the proper function of the entire WWTP. The control software program shall be factory tested prior to installation at the jobsite.

2. The control system shall have a timer-based system with level overrides and shall provide control, sequence, monitoring, and alarm annunciation capabilities. The operator shall be able to access the timer values and set points through the operator interface panel to allow for adjustment of cycle times and system flexibility. The control system shall be designed to automatically accommodate the plant's full range of loads and flows.

3. A complete control system for the WWTP shall be provided as described in the following and as shown on the contract drawings and these specifications. The control system shall include a circuit breaker disconnect, control transformer, branch protection, motor starters, microprocessor control, indicator lights, HAND-OFF-AUTOMATIC selector switches.

4. The incoming service of the control system shall be 460 volt, 60 hertz, three-phase. Motor starters for the equipment listed below shall be provided within the SBR control panel. Elapsed time indication shall be provided through (the operator interface of) (hard-wired elapsed time meters located within) the SBR control panel for equipment indicated by an asterisk (*). The list below shows the control requirements for the different treatment process within the SBR PLC. This list is not all inclusive, refer to the Contract Documents for all control requirements.

(Table on next page)

SBR EQUIPMENT DESCRIPTION

2 3.6 HP Mixer(s)*
2 2 HP Sludge Pump(s)*
3 20 HP Blowers*
2 Influent Valve(s)
2 Decanter Valve(s)
2 Air Control Valves
2 4-20 mA D.O. signal(s)
2 4-20 mA Pressure Transducer(s)
2 Level Sensors
2 Common Alarm

HEADWORKS EQUIPMENT DESCRIPTION

1 Common Alarm

DIGESTER EQUIPMENT DESCRIPTION

1 7.5 HP Blower(s)*
1 4-20 mA Pressure Transducer(s)
1 Level Sensors

POST-EQ EQUIPMENT DESCRIPTION

1 4-20 mA Flowmeter(s)
1 4-20 mA Pressure Transducer(s)
1 Level Sensor
1 Effluent Valve

DEWATERING EQUIPMENT DESCRIPTION

1 Common Alarm

DRYING BED LIFT STATION EQUIPMENT DESCRIPTION

1 Common Alarm

OVERFLOW LIFT STATION EQUIPMENT DESCRIPTION

1 Common Alarm

GENERATOR PAD EQUIPMENT DESCRIPTION

1 Generator Status (Running/ Off/ Auto)
1 Automatic Transfer Switch Position
1 Low Fuel Alarm
1 Fail Alarm

Q. Enclosure

1. The automatic controls shall be provided in a UL listed, NEMA Type 4X 304 stainless steel (12 gauge) floor mount enclosure that provides insulation and protection for electrical controls and components from highly corrosive environments indoors and outdoors. Enclosure shall include a seamless foam-in-place gasket to assure watertight and dust-tight seal. An internal 3-point latch and 316SS padlocking handle shall be provided. Enclosures shall be unpainted, with a smooth brushed finish. Enclosure shall include a painted white mild steel (12 gauge) sub-panel mounted with collar studs. The control enclosure shall be mounted remotely in the operations building.

2. Each control enclosure assembly shall be provided with corrosion inhibitors to protect interior electrical components from damage caused by high humidity. The corrosion inhibitors shall be installed prior to shipment to provide protection during shipment and storage of the enclosure.

3. A thermostat-controlled air conditioner with noise suppression shall be supplied to protect control components mounted inside the enclosure from high temperatures, humidity, and ambient air contaminants. The air conditioner shall be constructed of brushed finish stainless steel 304 material and provide NEMA 4X Type protection from outdoor and hose-down applications. The air conditioner unit shall use CFC-free or environmentally safe refrigerant that is universally accepted.

4. A UL listed, automatic molded case 3-pole disconnect breaker shall be provided in the control enclosure(s). The primary function of the disconnect switch shall be to provide a means to manually open a circuit and automatically open a circuit under overload or short circuit conditions. The disconnect breaker shall have a door mounted operating mechanism with trip indication. Power distribution connectors shall be mounted integrally to the circuit breaker for multiple load connections. Integral connectors shall be provided.

R. Control Panel Wiring and Assembly

1. All Control panels shall be UL certified. Testing by manufacturer's electrical engineering prior to releasing for shipment shall be completed. Testing shall consist of the following:
   - Point to point testing of all wiring prior to application of power
   - Intended supply voltage shall be applied to the enclosure
   - All components shall be tested for proper operation and calibration
   - The PLC and operator interface program shall be loaded and functionally checked
   - All components shall be checked to confirm proper mounting specifications have been followed
   - Enclosure shall be inspected for defects and repaired if necessary
   - All labeling of wires and devices are correct, properly installed and clean

2. The manufacturer shall finalize the factory checkout by completing a control panel checklist to document all testing completed above. Upon the successful completion of the control testing of the enclosure assembly, all applicable documentation (i.e. finalized drawing set, signed control checklist cover page, device data sheets, etc.) shall be placed in the drawing pocket of the enclosure.

3. All control enclosures shall be custom assembled and wired in an Underwriters Laboratories (UL) certified cabinet shop using quality materials and labor. Short circuit rating of control enclosure shall be 5 kA RMS symmetrical @ 480VAC maximum. All control panel single conductor wire shall be 16 AWG multi-strand machine tool wire (MTW) minimum, with PVC insulation. Wire colors are as follows: (next page)

208 VAC or higher	-	Black
120 VAC control power	-	Red
Neutral	-	White
Ground	-	Green with Yellow Stripe
Power from remote source	-	Orange
Neutral from remote source	-	White with Orange Stripe
24 VDC (+)	-	Blue
24 VDC (-)	-	White with Blue Stripe
Intrinsically Safe	-	Light Blue

4. All wires shall be clearly marked with an identification number consistent with the wiring schematic drawing. Wire markers shall be a thermal transfer printable type. The material shall be a self-laminating vinyl. Labels shall be Brady THT-9-427-10 or ENGINEER-approved equal. Wiring inside the control panel shall be run in PVC wiring duct rated for continuous temperatures up to 122°F (50°C). Devices mounted in the enclosure door shall have wires run in spiral wrap to avoid pinch points when opening and closing the door. Control components mounted internal and external to the enclosure shall be mounted with stainless steel hardware and clearly labeled with a plastic identification nametag. The tag shall be white with black lettering.

S. Motor Starter(s)

1. A full voltage non-reversing Integrated Motor Starter-Controller shall be provided for motor applications up to 15 kW. Each starter shall provide control, protection, and monitoring functions for the motor. The starter shall be NEMA rated IEC form factor and shall have certifications according to UL and CSA standards and shall bear the CE marking. The starter shall have a maximum rated operational voltage of 690V and provide a 42kA @ 480 VAC rated breaking capacity on short circuit. The starter shall have a mechanical durability of 15 million operations. The starter shall provide short circuit trip, thermal overload trip with selectable tripping class, under current trip and phase imbalance trip.

2. A full voltage non-reversing NEMA Style motor starter shall be provided for motor applications over 15 kW. Each starter shall consist of a circuit breaker, contactor, and overload relay. The starter shall be NEMA rated and shall have certifications according to UL and CSA standards and shall bear the CE marking. The starter shall have a maximum rated operational voltage of 600V and provide a minimum 18 kA @ 480VAC and 25 kA @ 240 VAC interrupt rating on short circuit when used in combination with a PowerPact circuit breaker. The starter shall have a mechanical durability of 2 million operations. The solid-state overload relay shall have class 10/20 (selectable) tripping characteristics with trip current adjustment, phase loss and unbalance protection.

T. Variable Frequency Drive(s)

UL Listed Variable Frequency Drives (VFD) shall be provided to control pumps and/or blowers. The VFD's shall control pump and/or blower speed via an analog signal from the PLC. The VFD output frequency shall be programmable. The VFD shall be provided in a NEMA Type 20 panel mount package and rated for an operating temperature of -4° to 122°F (-20° to 50°C). The VFD shall have a 65-kA maximum short circuit rating.

U. Transformer

A step-down multi-tap transformer shall be supplied when there is a necessity to reduce incoming 3-phase power to 120 VAC single-phase. The transformer power wire connections (incoming and outgoing) shall be protected with a finger-safe cover to protect against accidental contact. Primary and secondary fuse protection shall be provided. Transformer shall be UL listed and of continuous wound construction with vacuum

impregnated with non-hygroscopic thermosetting varnish. Transformer shall be Square D 9070T or approved equal.

V. Transformer Primary and Secondary Fuse

Properly rated fuses and fuse blocks shall be provided for primary and secondary protection of the transformer. Each fuse shall be equipped with a thermoplastic cover to protect against accidental contact. Clip style fuse block shall be rated up to 600 VAC and 100 amps, dual element, time delay fuses shall be rated up to 600 VAC. Fuse blocks and fuses shall be UL listed. Fuses shall be Littelfuse Class CC or ENGINEER-approved equal. Fuse blocks and fuse covers shall be manufactured by Marathon or ENGINEER-approved equal.

W. Circuit Breaker

All single-phase branch or supplementary circuits shall be protected with a single-pole, C-Curve rated circuit breaker. Circuit breakers shall be rated for 240 VAC maximum, 50/60 Hz and UL 489 listed. Supplementary and branch protection circuit breakers shall be Merlin Gerin Multi 9 or ENGINEER-approved equal.

X. Fuse

Properly rated fuses and fuse holders shall be provided for protection of individual control devices (discrete and analog signals) mounted outside of the enclosure. Each fuse shall be housed in a hinged type fuse block to protect against contact with the fuse. Fuses shall be rated up to 250 VAC and be Littelfuse or approved equal. Fuse holders for discrete devices shall be rated to 600 VAC and 30 Amps. Fuse holders for analog devices shall be rated to 300 VAC and 15 Amps. Fuse holders shall be Allen Bradley 1492 or ENGINEER-approved equal.

Y. Operator Device

1. Operator devices (pushbuttons and selector switches) shall be mounted through the control enclosure door for all automatic controlled equipment. Transformer type pilot lights and illuminated pushbuttons shall be provided for indication of an operation status. Lights shall be a 6 VAC incandescent type lamp. Color coding shall be applied as required and is as follows:
   - Amber – Alarm active, caution
   - Green – Valve open, motor running
   - Red – Valve closed
   - White - Information
2. All operator devices shall be UL Listed, 30.5mm style, NEMA Type 4X rated, oil and water tight with finger safe guards located on the contact blocks to prevent accidental contact with wire connections. Operator device function shall be identified with an engraved white Gravoply nameplate with black letters. Operator devices shall be Square D 9001 or approved equal.

Z. High Frequency Noise Filter

A UL listed active tracking filter shall be provided to protect the PLC and HMI power feeds from high-frequency noise and low-energy transients. It shall be designed for a single-phase input voltage of 120VAC operating at 50/60 Hz. The unit shall provide surge capacity of 25,000 amps and provide transient protection in all modes (Line to neutral, line to ground and neutral to ground).

AA. Ground Fault Duplex Receptacle

A UL listed ground fault circuit interrupter (GFCI) duplex receptacle shall be provided within the panel for instrument (e.g. programming terminal, modem, etc.) use only. The receptacle shall be protected with a 5 Amp circuit breaker. The receptacle shall carry a 20A / 120VAC rating. The electro-mechanical circuit interrupter shall be double-pole and trip free (GFCI protection and shall not be overridden by holding reset button). Built-in transient suppression shall protect GFCI's internal circuitry from voltage transients.

BB. 24 Volt DC Power Supply

A UL listed, industrial grade, compact power supply shall be supplied to provide 24 VDC power to such rated components. The power supply shall be DIN rail mounted and functional with input voltage of 100 to 240 VAC (single-phase) incoming control power. The power supply shall have a green LED which shall be illuminated when output voltage is "OK".

CC. Device Surge Protective Device

A UL Recognized surge protective device shall be provided to protect electronic circuits from high voltage transients and temporary overloads on power and signal lines.

DD. Control Relay

UL listed control relays for general control purposes shall be supplied with a pilot light to indicate when the coil is in an energized state. The relay socket shall be panel or DIN rail mounted inside the enclosure. The relays shall provide the following ratings: 120VAC coil, 10A contact rating (thermal), 250 VAC insulation rating and 5 million mechanical life cycles.

EE. Terminal Block

Standard feed-through screw terminal blocks, DIN rail mounted, shall be supplied for all point to point wiring connections. All terminals shall be numbered per the wiring schematic with printed markers. Terminals shall carry a 600V AC/DC voltage rating.

FF. Auto Dialer

The auto dialer shall be a solid-state component capable of dialing up to 16 phone numbers and shall be housed in a NEMA Type 12 rated enclosure. Phone numbers shall be programmed via the system's keyboard or Touch Tone phone. The unit shall continuously monitor the presence of AC power and the status of four contact closure inputs. Upon initiating an alarm phone call, the system is to "speak" only those channels that are currently in "alarm status". The unit shall optionally be field upgradeable to incorporate a total of 8, 16, 24, or 32 digital alarm inputs. The auto dialer is to use a standard rotary pulse or Touch Tone "dial-up" phone line. The auto dialer shall be an RACO Verbatim® or approved equal.

GG. Programmable Logic Controller

Automatic operation of the SBR shall be controlled through a programmable logic controller (PLC) mounted inside the main control panel. The PLC components shall consist of a power supply, CPU, discrete input and output modules and analog input and output modules. The processor unit shall include built-in USB and two (2) Ethernet IP communication ports. All input and output points supplied (including unused) shall be wired to terminal blocks. Processor design characteristics shall include: 1.0MB user memory size, real-time clock and calendar, battery backed RAM and an operating temperature range between 32°F and 140°F. The PLC processor shall be an Allen-Bradley CompactLogix 1769-L30ER or ENGINEER-approved equal.

HH. PLC Power Supply

Input voltage range of 85-265 / 170-265 VAC, 47-63 Hz, maximum inrush current of 30 amps, backplane output current of 4 amps @ 5V or 2 amps @ 24V, internal fuse protection, ambient operating temperature of 32°F to 140°F, Class I, Division 2 hazardous location certified, UL Listed.

II. Discrete Input Module

Operating voltage of 79 to 132 VAC at 47 to 63 Hz, backplane current draw at 5VDC = 115mA, off-state current 2.5mA maximum, maximum inrush current 250mA, LED status indication of each point, ambient operating temperature of 32°F to 140°F, UL Listed.

JJ. Discrete Output Module

Operating voltage of 5 to 265 VAC at 47 to 63 Hz / 5 to 125 VDC, backplane current draw at 5 VDC = 205 mA, at 24VDC = 180mA, off-state current leakage is 1.0mA, LED status indication of each point, ambient operating temperature of 32°F to 140°F, UL Listed.

KK. Analog Input Module

Backplane current draw at 5 VDC = 120mA, at 24VDC = 70mA, LED status indication of each point, ambient operating temperature of 32°F to 140°F, UL Listed.

LL. Analog Output Module

Backplane current draw at 5 VDC = 120mA, at 24VDC = 170mA, LED status indication of each point, ambient operating temperature of 32°F to 140°F, UL Listed.

MM. Ethernet Switch

An unmanaged Ethernet switch shall be provided inside the control enclosure to provide connectivity between the PLC, operator interface and plant networking. The switch shall support both 10 and 100 Mbit/s operation. The switch shall have five (5) 10/100Base-T ports with RJ-45 sockets and shall support auto-crossing, auto-negotiation, and auto-polarity. Maximum distance between devices shall be 100m. The unit shall be DIN rail mounted and require 24VDC power. Diagnostic LEDs for power and connection status shall be included.

NN. Remote Ethernet Access Gateway

A UL marked, remote access VPN gateway shall be supplied to securely connect to a PLC via the Internet using an Ethernet port and a secure VPN tunnel. The gateway can be DIN rail or wall screw mounting and shall provide WAN/LAN 10/100 Mb Ethernet ports.

OO. Human Machine Interface

The operator interface shall be a NEMA Type 12, 13, 4X rated, 6.5” diagonal, color touchscreen display with Ethernet and serial communications. The interface shall be a liquid crystal display (LCD). The display type shall be color active matrix thin-film transistor (TFT) with 640 x 480-pixel resolution. The rated operating temperature shall be 32° to 131°F (0° to 55°C). The operator interface shall be an Allen Bradley PanelView Plus 7 series A with VNC enabled for remote viewing and control

PART 3 - EXECUTION

3.01 FINAL ACCEPTANCE

A. After installation of the system and checkout by the OWNER, ENGINEER and the SBR Manufacturer, a controls certification test shall be performed per the agreed upon testing protocol, shown below. This protocol will test the operation of the entire WWTP control network and SCADA System, and provide confirmation that they will perform as required. This testing will be accomplished with the aid of simulation software and real-world operation to demonstrate the operation of the system in all modes. A copy of this testing protocol shall be provided to the ENGINEER and the OWNER a minimum of two weeks prior to the test. The test shall be completed per the protocol. Any defects or problems will be addressed and a timeframe to resolve the problem will be identified. The operational demonstration shall confirm the SBR control system, alarms and status are functioning as specified. If additional time or tests are needed due to improper function of the SBR control system or equipment provided by the SBR Manufacturer, the SBR Manufacturer shall correct the defects or problems at no cost/fee to the OWNER.

B. The Controls System will be tested during the SBR Manufacturer field service representative's startup trip, and will be performed by the SBR Manufacturer field service representative. The Engineer, Installing Contractor and the Owner shall have the right to witness the test.

Protocol:

The controls field performance test shall be performed by the SBR Manufacturer Systems' field service representative as follows:

1. Confirm that all leads are connected to the proper terminals.
2. Verify that the PLC battery is installed. If memory module is required, confirm installation and setup.
3. Verify operation of input devices through PLC including spares.
4. Verify analog inputs and outputs have been simulated and verified in the PLC.
5. Verify Operation of output devices through PLC
6. Verify all PLC/Module software is setup correctly
7. Program operates correctly when PLC is placed in "Run" mode
8. Check the HMI to verify that each input and reading is correct. This test shall be performed on each screen and will confirm that the input addresses are correct.
9. Check communication between PLC and other vendor PLCs
10. Check communication between PLC and SCADA system
11. Verify SCADA input, readings, and addresses are correct. This test shall be performed on each graphical screen.

The Next steps will be accomplished by utilizing an operational simulator and speeding up the actual times of each phase to mimic true operation of the system.

12. Verify operation of Mix-Fill phase.
    - End of Decant phase interval initiate
    - Cycle reset initiate
    - Verify equipment states are correct throughout the cycle

13. Verify operation of React-Fill phase.
    - End of Mix-Fill phase interval initiate
    - Verify equipment states are correct throughout the cycle
14. Verify operation of React phase.
    - End of React-Fill phase interval initiate
    - Verify equipment states are correct throughout the cycle
15. Verify operation of Settle phase.
    - End of React phase interval initiate
    - Verify equipment states are correct throughout the cycle
16. Verify operation of Decant phase.
    - End of Settle phase interval initiate
    - Verify idle with end decant level input actuation
    - Verify equipment states are correct throughout the cycle
17. Verify operation of Sludge Waste sequence.
    - Applied at end of Decant phase
    - Verify sludge waste phase disables with digester high level alarm (If applicable)
    - Verify equipment states are correct throughout the cycle
18. Verify operation of Storm Mode.
    - Verify storm mode operation in each SBR mode (single, dual, etc.)
    - Verify equipment states are correct throughout the cycle
19. Verify operation of batch reactor blowers/aerators.
    - Timing cycle
    - D.O. mode (if applicable)
20. Verify operation of Auxiliary systems and components.
    - Post Equalization Basin
    - Aerobic Digester
    - Bar Screens
    - Bagger Dewatering Equipment
    - Etc.
21. Verify elapsed time meters function and can be individually reset.
    - Blower(s) run time
    - Sludge pump(s) run time
    - Mixer(s) run time
    - Auxiliary motors run time
22. Verify alarm acknowledge and reset for all conditions. Detailed alarm list is included in the control description.
23. Verify settings of all default values. See the control description.
24. Verify Power cycle does not affect modified values under normal conditions and resets defaults when battery is low or operator requests it.
25. Verify all safety and wiring channels covers are in place.
26. Verify all wiring connections are secure and tight.

27. Verify panel is free of debris and clean
28. Errors or alarms caused by equipment not supplied by SBR Manufacturer shall not affect the pass/fail results of the SBR Manufacturer Control Panel.
29. The equipment is installed, operated, and maintained in full accordance with instructions provided by SBR Manufacturer in the Operation and Maintenance Manual
30. The equipment has been paid for in full in accordance with the terms of the contract.
31. The controls testing requirement shall no longer be applicable or valid if any product supplied by SBR Manufacturer is modified or altered without the written approval of SBR Manufacturer, including any software program.
32. In the event of failure of the equipment to complete the test as proposed above, SBR Manufacturer shall have the option to modify the equipment, programming, and controls as necessary to achieve the guaranteed performance testing. The maximum liability to SBR Manufacturer for the modification or supply of additional equipment shall be limited to 100% of the initial sales price of the equipment supplied.

C. Reporting of Results:

SBR manufacturer shall provide certification once any errors are corrected and the control system has passed the above field tests.

3.02 SPARE PARTS

A. Provide the OWNER with a list of the manufacturers' recommended spare parts.

END OF SECTION

SECTION 46 7600 – DEWATERING EQUIPMENT

PART 1 – GENERAL

1.01 THE REQUIREMENT

A. The Contractor shall furnish and install a new factory-built Sludge Bagger System, one (1) dry polymer mixing and dosing system, one (1) sludge feed pump, and one (1) local control panel, complete and operable with all necessary parts and accessories. The Sludge Bagger System shall have the capacity to receive 1,028 gallons per day of sludge at a maximum nominal feed concentration of 1.5% dry solids generated by a 90,000 GPD wastewater treatment plant.

B. Unless specifically indicated otherwise, the arrangement of equipment shown on the Drawings is based upon information available at the time of design and is not intended to show exact dimensions particular to a specific

1.02 The Manufacturer shall certify to not less than five (5) years of experience in the application, design, construction, and operation of Sludge Bagger Systems of the type specified in this Section. The Manufacturer shall produce a list of not less than ten (10) operating installations as evidence of meeting the experience requirement.

1.03 SUBMITTALS

A. Submittals shall be furnished in accordance with Section 01 3300 – Submittal Procedures.

1.04 OPERATION AND MAINTENANCE MANUALS

A. The Manufacturer shall provide Operation and Maintenance Manual hard copies and electronic version in PDF format for the Sludge Bagger System and all system components.

B. Operation and Maintenance Manuals shall be furnished in accordance with these Specifications.

1.05 QUALITY ASSURANCE

A. The Manufacturer(s) shall provide a 2-year equipment warranty.

1.06 SPARE PARTS

A. Manufacturer shall provide all spare parts anticipated to be required for the first 2 years of operation. Manufacturer shall clearly define quantity and description of part and associated part numbers as part of Manufacturer’s scope of supply.

B. Spare parts shall be placed in a separate container clearly marked as “Spare Parts.” All parts shall be identified and clearly labeled with applicable part numbers.

PART 2– PRODUCTS

2.01 GENERAL

A. The Sludge Bagger System and all components and accessories shall be designed for a covered outdoor service.

B. The Sludge Bagger System shall accommodate 8 bags during normal operation.

C. Throttling polymer dosage by use of valves is not acceptable.

2.02 POLYMER DOSING SYSTEM

A. Furnish and install one (1) polymer mixing unit designed to prepare, age, and feed dry type polymer.
   1. The polymer mixing unit shall include one (1) polymer mixing tank with stand, one (1) mixer, one (1) polymer feed pump, and one (1) static mixer assembly with polymer injection ring and distribution manifold.

B. The polymer mixing tank shall double as a polymer storage tank, and shall be 2'-4" diameter x 3'-6" sidewall height with a nominal 100 gal. working capacity. The tank shall be polyethylene construction and have a flat bottom and 1'-2" IPS half-coupling in the center bottom for discharge and drain.

C. The polymer mixer shall be portable clamp-mount propeller type with ¾" dia. Stainless steel shaft and single propeller designed to operate at 400 RPM. The mixer shall have a ¼ HP TEFC motor designed for 120-volt, single phase, 60 HZ service. The polymer mixer shall include an extension cord with ground and on-off toggle switch, operated from the control panel.

D. The tank stand shall be rigid stainless-steel construction and shall include a base on which the polymer fed pump shall be mounted. Supports for the clamp-mounted type mixer and control panel shall also be provided.

E. The polymer feed pump shall be a diaphragm-type capable of pumping water at a rate up to 4.8 GPM and shall be furnished with a TEFC 115-volt AC motor. Motor speed shall be controlled by an AC speed control unit mounted in the control panel. Pump wetted parts shall be reinforced nylon and EPDM elastomer.

F. The static mixing assembly shall be affixed to the outside of the polymer system and shall mix the polymer solution and sludge together. No piping shall be located inside the polymer tank. At the point of initial mixing, there shall be a polymer injection rink with four (4) polymer injection points for complete blending of polymer and sludge. Supplied with the injection ring shall be a polymer injection manifold with four (4) hoses to the polymer injection ring.

G. Acceptable Manufacturers:
   1. Prominent;
   2. Watson-Marlow Inc.;
   3. Or ENGINEER-approved equal.

2.03 SLUDGE FEED PUMP

A. The sludge feed pump shall be a rotary lobe type pump. The sludge feed pump shall be rated to deliver 20 GPM @ 40 ft TDH and designed to handle a 3/8" maximum particle size. Pump housing shall be cast iron.

B. The drive unit shall be a 3 HP TEFC NEMA motor designed to operate on 120-volt, single phase, 60 Hz service.

C. Acceptable Manufacturers:
   1. Boerger;
   2. LobePro;
   3. Or ENGINEER-approved equal.

2.04 SLUDGE DISTRIBUTION & BAGGING UNIT

A. The sludge distribution and bagging device shall be entirely 304 stainless steel construction. The frame shall be a minimum 1'-1/2" sq. tubing and the open-top plenum shall be a minimum 14 ga. sheet.

B. Funnels attached to the bottom side of the feed plenum shall be nominal 10” dia. and shall be provided with quick-opening clamps for the bag holders on each unit.

C. A quick-opening containment cage shall be provided for each bag. The cage shall be designed to allow free release of the filtrate while providing support for the bag.

D. The top of the plenum shall be covered to protect level proves and plenum walls and floor from rain and light exposure.

E. The plenum shall be provided with a 2” flange for connection of the sludge feed, a 3” connection for the PVC overflow pipe and mounting bracket for the level control system.

F. The plenum shall be provided with a floatless conductivity-type liquid level control system with PVC-coated stainless steel proves and C.I electrode holder mounted on an adjustable bracket.

G. A minimum 14 ga. 304 stainless steel filtrate collection pan shall be provided to collect and direct filtrate to a 3” plain end drain pipe.

H. Suitable stainless-steel members shall be provided to serve as supports for the bags and to permit the forks of the bag cart to be placed under each bag before the holder is opened.

I. Acceptable Manufacturers
   1. Envirodyne;
   2. Charter Machine Company;
   3. Or ENGINEER-approved equal.

2.05 SLUDGE BAGS

A. A quantity of 200 bags shall be provided along with the unit.

B. Each bag shall be nominal 22.5-gallon capacity made of porous synthetic material resistant to tears & breaks.

C. Bag ties and a spring-return ratchet twister shall be provided to close the bags after they have been filled with sludge.

D. Acceptable Manufacturers
   1. Envirodyne;
   2. Or ENGINEER-approved equal.

2.06 BAG CART

A. The bag cart shall be a dual wheel dolly designed with foot operated hydraulic fork lift arrangement to permit easy removal of filled bags from the dewatering unit.

B. Cart shall be carbon steel construction with epoxy paint finish.

C. Acceptable Manufacturers
   1. Envirodyne;
   2. Or ENGINEER-approved equal.

2.07 CONTROL PANEL

A. A single control panel integrating the Sludge Bagger System controls shall be furnished and installed at the dewatering area canopy and provided with a Unistrut support to be free standing from the other equipment or structures.

B. The control panel shall be NEMA 4X FRP enclosure, pre-assembled and pre-wired with terminal strips for connection of control wiring by others.

C. The panel shall be provided with a 480-volt, 3-phase, 60 HZ, 20-amp service.

D. The VENDOR shall provide a 120-volt, 1-phase, 60 HZ step-down transformer in accordance with UL & NEC requirements and shall have the appropriate label attached thereto.

E. The control panel shall include all necessary controls for operation of the Sludge Bagger System and shall provide for “manual/automatic” operation with interlocks and relays as required to automatically control the “failure” shutdowns.

F. All components of the panel shall be UL-listed and of heavy-duty industrial quality as manufactured by Hoffman, GE, Square D, Allen-Bradley, Siemens, or Engineer approved equal.

G. Signals:
   1. The control panel shall receive a signal from the SBR Control Panel when the Aerobic Digester begins wasting sludge. This signal shall initiate polymer mixing and dosing, and open any valves that regulate sludge distribution to the bagging system. The control panel need not send nor receive any other signals from other process areas.
   2. The control panel shall monitor and regulate the polymer dosing rate and all other local functions of the sludge bagging system, polymer system and sludge pump.

PART 3 – EXECUTION

3.01 MANUFACTURER’S SERVICES

A. Inspection, Startup, and Field Adjustment: The service representative of the Manufacturer shall be present at the Site to furnish the field services required as specified herein.

B. Services of the Manufacturer shall be in accordance with these Specifications.

C. Manufacturer shall define quantity of trips and days on site necessary to perform the specified services as a part of the Manufacturer’s scope of supply. Scope of supply shall be inclusive of travel and living expenses.

D. Upon completion of field services, the representative of the Manufacturer shall prepare and submit a report in accordance with the requirements of these Specifications.

3.02 INSTALLATION

A. Contractor shall install the equipment in accordance with installation requirements of these Specifications.

END OF SECTION

Appendix A – Geotechnical Report

Western Technologies Inc.

GEOTECHNICAL EVALUATION REPORT

JEROME WWTP UPGRADES
Jerome, Arizona
WT Reference No. 2522JW197

PREPARED FOR:
Pace Advanced Water Engineering
P.O. Box 4805
Scottsdale, Arizona 85261
Attn: Ms. Andrea Jaycox, Senior Project Coordinator

October 25, 2022

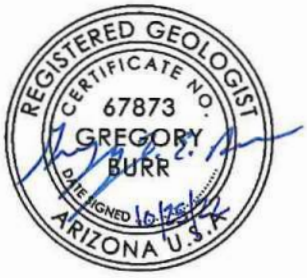

Gregory L. E. Burr, R.G., E.I.T.
Director of Geotechnical Services



Craig P. Wiedeman, P.E.
Senior Geotechnical Engineer

Western Technologies Inc.
The Quality People
Since 1955

2400 East Huntington Drive
Flagstaff, Arizona 86004-8934
(928) 774-8700 • fax 774-6469

October 25, 2022

Pace Advanced Water Engineering
P.O. Box 4805
Scottsdale, Arizona 85261

Attn: Ms. Andrea Jaycox, Senior Project Coordinator

Re: Geotechnical Evaluation
Jerome WWTP Upgrades
Jerome, Arizona

Job No. 2522JW197

Western Technologies Inc. has completed the geotechnical evaluation for the waste water treatment plant upgrades and new wastewater pipeline to be located in Jerome, Arizona. This study was performed in general accordance with our proposal number 2522PW253 dated June 15, 2022. The results of our study, including the boring/test pit location diagrams, laboratory test results, boring/test pit logs, and the geotechnical recommendations are attached.

We have appreciated being of service to you in the geotechnical engineering phase of this project and are prepared to assist you during the construction phases as well. If design conditions change, or if you have any questions concerning this report or any of our testing, inspection, design and consulting services, please do not hesitate to contact us. We look forward to working with you on future projects.

Sincerely,
WESTERN TECHNOLOGIES, INC.
Geotechnical Engineering Services

Gregory L. E. Burr, R.G., E.I.T.
Director of Geotechnical Services

Copies to: Addressee (emailed)

TABLE OF CONTENTS

1.0 PURPOSE 1

2.0 PROJECT DESCRIPTION 1

3.0 SCOPE OF SERVICES 2
3.1 Field Exploration 2
3.2 Laboratory Analyses 2
3.3 Analyses and Report 3

4.0 SITE CONDITIONS 3
4.1 Surface 3
4.2 Subsurface 4

5.0 GEOTECHNICAL PROPERTIES 4

6.0 RECOMMENDATIONS 4
6.1 General 4
6.2 Design Considerations 5
6.3 Tank Foundations 5
6.4 Manhole Foundations 6
6.5 Lateral Design Criteria for Thrust Blocks 6
6.6 Conventional Spread Footings 6
6.7 Lateral Design Criteria 7
6.8 Seismic Considerations 8
6.9 Slab-on-Grade Support 9
6.10 Drainage 10
6.11 Aggregate-Surfaced Roadways 10
6.12 Corrosivity 10

7.0 EARTHWORK 11
7.1 General 11
7.2 Site Clearing 11
7.3 Excavation 11
7.4 Tank Pad Preparation 12
7.5 Spread Footing Foundation Preparation 12
7.6 Slab-on-Grade Preparation 12
7.7 Exterior Slab Preparation 13
7.8 Materials 14
7.9 Placement and Compaction 15
7.10 Compliance 16

8.0 ADDITIONAL SERVICES 16

9.0 LIMITATIONS 17

10.0 CLOSURE 17

TABLE OF CONTENTS (Continued)

TEST PIT/BORING LOCATION DIAGRAMS ..... Plates 1 and 2

APPENDIX A
Definition of Terminology A-1
Method of Soil Classification A-2
Test Pit/Boring Log Notes A-3
Test Pit/Boring Logs ..... A-4 to A-16

APPENDIX B
Laboratory Tests ..... B-1 to B-5

GEOTECHNICAL EVALUATION
JEROME WWTP UPGRADES
JEROME, ARIZONA
JOB NO. 2522JW197

1.0 PURPOSE

This report contains the results of our geotechnical evaluation for the proposed WWTP upgrades and new wastewater pipeline to be located at the existing wastewater treatment plant in Jerome, Arizona. The purpose of these services is to provide information and recommendations regarding:

- foundation design parameters
- slab-on-grade
- lateral earth pressures
- excavation conditions
- earthwork, including backfill placement, and suitability of existing soils for backfill materials
- drainage
- corrosivity
- on-site aggregate surfacing

Results of the field exploration, field tests, and laboratory testing program are presented in the Appendices.

2.0 PROJECT DESCRIPTION

Based on the revised information provided by Ms. Andrea Jaycox, Senior Project Coordinator, the proposed project will consist of approximately 2,400 linear feet of wastewater line, a new SBR Package Plant, and new primary settling and headworks tanks. The structures will be concrete and/or masonry construction with slab-on-grade floors. Maximum wall and column loads for the structures are assumed to be 3 kips per linear foot and 45 kips, respectively. The wastewater line invert elevations will be a maximum of 10 feet below the lowest existing site grades. We anticipate no extraordinary slab-on-grade criteria and that the finished structure bottom levels will be within about 2 to 3 feet of the existing site grades. In addition, approximately 2,000 linear feet of the existing access road will be resurfaced, widened, and additional pull-outs will be constructed. Should any of our information or assumptions not be correct, we request that the Client notify WT immediately.

3.0 SCOPE OF SERVICES

3.1 Field Exploration

Seven test pits and six borings were excavated/hand-auger drilled to depths of about 1 to 8 feet below the existing site grades at the approximate locations shown on the attached test pit/boring location diagrams. In addition, two samples of on-site rock were obtained for unit weight and unconfined compressive strength testing.

Logs of the test pits/borings are presented in Appendix A. Subsoils encountered during excavating/drilling were examined visually and sampled at selected depth intervals. A field log was prepared for each test pit/boring. These logs contain visual classifications of the materials encountered during excavation/drilling as well as interpolation of the subsurface conditions between samples. Final logs, included in Appendix A, represent our interpretation of the field logs and include modifications based on laboratory observations and tests of the field samples.

The final logs describe the materials encountered, their thicknesses, and the locations where samples were obtained. The Unified Soil Classification System was used to classify soils. The soil classification symbols appear on the test pit/boring logs and are briefly described in Appendix A. Local and regional geologic characteristics were used to estimate the seismic design criteria.

3.2 Laboratory Analyses

Laboratory analyses were performed on representative samples to aid in material classification and to estimate pertinent engineering properties of the on-site materials for preparation of this report. Testing was performed in general accordance with applicable ASTM and Arizona methods. The following tests were performed and the results are presented in Appendix B.

- Water content
- Dry density
- Remolded expansion potential
- Maximum density/optimum moisture
- Gradation
- Plasticity
- Soluble salts/sulfates/chlorides

- Corrosivity (ASTM A674)
- Unconfined compressive strength (rock)
- Unit weight (rock)

Test results were utilized in the development of the recommendations contained in this report.

3.3 Analyses and Report

This geotechnical engineering report includes a description of the project, a discussion of the field and laboratory testing programs, a discussion of the subsurface conditions, and design recommendations as appropriate to the purpose. The scope of services for this project does not include, either specifically or by implication, any environmental assessment of the site, discovery of underground storage tanks or other underground structures, or identification of contaminated or hazardous materials or conditions. If there is concern about the potential for such contamination, other studies should be undertaken. We are available to discuss the scope of such studies with you.

4.0 SITE CONDITIONS

4.1 Surface

At the time of our field exploration, the site was a developed wastewater treatment plant. The exteriors of existing structures appeared to be in good to fair condition. The site is bordered on the east by the existing aggregate surfaced access road to the plant, and on all other sides by northeast-southwest oriented Bitter Creek that is about 50 to 100 feet wide and 20 to 30 feet deep that directs flow to the northeast. The ground surface was relatively flat in the developed portions of the site, steep to very steep surrounding the developed areas, and contained a sparse to moderate growth of native juniper trees, bushes, cacti, grasses and weeds. Surface drainage appeared to be fair to poor with some evidence of previous surface water ponding in the developed portions of the site, and good in the undeveloped portions of the site by means of surface sheet flow to the west and north down the existing slopes into Bitter Creek.

4.2 Subsurface

As presented on the test pit/boring logs, surface and subsoils extending to the full depth of exploration at all locations explored consisted of medium to near-high plasticity Clayey SANDS with variable amounts of gravel, Clayey GRAVELS with variable amounts of sand and non-plastic Silty GRAVELS with variable amounts of sand. All soils encountered contained random amounts of limestone cobbles and boulders. Refusal to excavator/auger penetration occurred in all test pits/borings at depths of about 1 to 8 feet on LIMESTONE or limestone cobbles and boulders. Groundwater was not encountered in any test pit/boring at the time of exploration. The logs in Appendix A show details of the subsurface conditions encountered during the field exploration.

The test pit/boring logs included in this report are indicators of subsurface conditions only at the specific location and date noted. Variations from the field conditions represented by the test pits/borings may become evident during construction. If variations appear, we should be contacted to re-evaluate our recommendations.

5.0 GEOTECHNICAL PROPERTIES

Near-surface soils range from non-plastic to near-high plasticity. The site soils exhibit moderate expansion potential when recompacted, confined by loads approximating floor loads and saturated in accordance with standard Arizona test methods. Slabs-on-grade supported on recompacted native soils have a moderate potential for heaving if the water content of the soil increases. The site soils were too granular to obtain samples suitable for compression testing. Two samples of the on-site rock were obtained for unit weight and unconfined compressive strength testing and the results are present in Appendix B.

6.0 RECOMMENDATIONS

6.1 General

Recommendations contained in this report are based on our understanding of the project criteria described in Section 2.0, **PROJECT DESCRIPTION**, and the assumption that the soil and subsurface conditions are those disclosed by the test pits/borings. Others may change the plans, final elevations, number and type of structures, foundation loads, and tank bottom levels during design or construction. Substantially different subsurface conditions

from those described herein may be encountered or become known. Any changes in the project criteria or subsurface conditions shall be brought to our attention in writing.

6.2 Design Considerations

Existing fill was not encountered in the test pits/borings, but was observed on the site. We understand that no documentation is available regarding any field density testing that may have been performed during fill construction. Based on this lack of documentation and the overall condition of the fill observed, we consider the fill to be uncontrolled and recommend removal of existing fill in all structural areas.

Several of the test pits/borings indicate the presence of medium to near-high plasticity clayey soils on the site. These soils will expand or swell with an increase in moisture content. The structures and related improvements situated on expansive soils will be subject to movements if the foundation soils experience an increase in moisture content. It should be understood that if moisture penetrates expansive soils, there will likely be heave and possible resultant cracking/distress of the proposed structures and related improvements. It should be noted that shallow foundation systems are not designed to resist soil movements resulting from sewer or plumbing leaks, excessive or leaking irrigation systems, poor drainage, or water ponding near the structures. Construction of site fences, screen walls and other miscellaneous improvements such as exterior slabs-on-grade that typically fall under building code guidelines will be susceptible to heave as well.

Cobbles and boulders were encountered in the test pits/borings. These oversized materials, greater than 3 inches, could present construction difficulties for foundation, utility trenches and other excavations. In cut areas and excavations, exposed oversized materials should be removed.

6.3 Tank Foundations

Above-ground tanks may be supported on compacted aggregate underlain by a minimum thickness of 1 foot of site soils removed and replaced with properly compacted, imported engineered fill material. Below-ground tanks may be supported on scarified and recompacted native soils. Any existing fill should be removed in all proposed tank areas. The tank pads, prepared as recommended in the **EARTHWORK** section of the report, will be suitable to support a maximum dead plus live-load pressure of up to 3000 pounds per square foot. We anticipate that total and differential movements of the proposed above-ground tank structures, supported as recommended, should be within tolerable limits of

the tank manufacturer, typically uniform settlement of less than 2 inches and differential settlement less than 0.5-inch per 32 feet of circumference. Total and differential movements of the proposed below-ground tank structures, supported as recommended, are anticipated to be 1 inch and 3/4 inch, respectively. Additional foundation movements could occur if water from any source infiltrates the foundation soils. Therefore, proper drainage should be provided in the final design and during construction.

We recommend that the geotechnical engineer or his representative observe the tank pad preparation. It should be determined whether the materials exposed are similar to those anticipated for support of the tanks. Any soft, loose or unacceptable materials should be undercut to suitable materials and backfilled with engineered fill material.

6.4 Manhole Foundations

The soils encountered along the alignment are expected to have moderate to high bearing capacity at anticipated manhole foundation depths. Other than removal of any soft, loose, unstable or disturbed materials from beneath manhole foundations, specialized treatment of soils beneath manholes is not anticipated.

6.5 Lateral Design Criteria for Thrust Blocks

For any thrust block design, lateral loads may be resisted using a soil bearing pressure of 2500 pounds per square foot (psf). All fill against or around thrust blocks should be compacted to densities specified herein under **Placement and Compaction**.

6.6 Conventional Spread Footings

If conventional spread footings are used, they should be underlain by a minimum thickness of 1 foot of lean mix (2-sack) concrete backfill. Footings should bear at least 2 feet below the lowest adjacent finished grade. Footings may be designed to impose a maximum dead plus live-load pressure of up to 2500 pounds per square foot.

We anticipate that total movement of the proposed structures, supported as recommended, should be less than 1 inch. Differential movement should be less than ¾ inch. Additional foundation movements could occur if water from any source infiltrates the foundation soils. Therefore, proper drainage should be provided in the final design and during construction.

Finished grade is the lowest adjacent grade for perimeter footings and floor level for interior footings. The design bearing capacity applies to dead loads plus design live load conditions. Recommended minimum widths of column and wall footings are 24 inches and 16 inches, respectively. The bearing value given is a net bearing value and the weight of the concrete in the footings may be ignored.

All footings, stem walls and masonry walls should be reinforced to reduce the potential for distress caused by differential foundation movements. The use of joints at openings or other discontinuities in masonry walls is recommended.

We recommend that the geotechnical engineer or his representative observe the footing excavations before reinforcing steel and concrete are placed. It should be determined whether the soils exposed are similar to those anticipated for support of the footings. Any soft, loose or unacceptable soils should be undercut to suitable materials and backfilled with either lean mix or structural concrete.

6.7 Lateral Design Criteria

For retaining walls located above any free water surface with no surcharge loads, recommended equivalent fluid pressures and coefficients of base friction for unrestrained elements are:

- Active:
  Undisturbed subsoil .....38 psf/ft
  Compacted granular backfill .....30 psf/ft
  Compacted on-site soils (low expansive potential) .....38 psf/ft
  Clayey site soils ..... not recommended for use

- Passive:
  Shallow wall footings .....220 psf/ft
  Shallow column footings.....350 psf/ft
  Dense rock .....500 psf/ft

- Coefficient of base friction
  Soil.....0.35*
  Rock.....0.55

* The coefficient of base friction (soil) should be reduced to 0.25 when used in conjunction with passive pressure.

Where the design includes restrained elements, the following equivalent fluid pressures are recommended:

- At-rest:
  Undisturbed subsoil .....64 psf/ft
  Compacted granular backfill .....55 psf/ft

These lateral earth pressures are not applicable for submerged soils. We should be consulted for additional recommendations if such conditions are to be included in the design. Any surcharge from adjacent loadings must also be considered. Walls below grade should be waterproofed.

We recommend a free-draining soil layer or manufactured geocomposite material, be constructed adjacent to the back of the retaining wall. A filter may be required between the soil backfill and drainage layer. This drainage zone should help prevent hydrostatic pressure buildup. This vertical drain should be tied into a gravity drainage system at the base of the retaining wall. It is important that all backfill be properly placed and compacted. Backfill should be mechanically compacted in layers. Flooding or jetting should not be permitted. Care should be taken not to damage the walls when placing the backfill. Backfills should be inspected and tested during placement.

Fill against footings, stem walls and retaining walls should be compacted to densities specified in **EARTHWORK**. Medium to high plasticity clay soils should not be used as backfill against retaining walls. Compaction of each lift adjacent to walls should be accomplished with hand-operated tampers or other lightweight compactors. Overcompaction may cause excessive lateral earth pressures which could result in wall movements.

6.8 Seismic Considerations

Structures should be designed in accordance with applicable building codes. The seismic design parameters presented in the following table, in accordance with the 2018 International Building Code and ASCE 7-16, are applicable to the project site:

Seismic Design Parameters International Building Code 2018, ASCE 7-16	
Soil Site Class	C
Mapped Spectral Response Acceleration at 0.2 sec period (S_s)	0.31g
Mapped Spectral Response Acceleration at 1.0 sec period (S_1)	0.097g
Site Coefficient for 0.2 sec period (F_a)	1.3
Site Coefficient for 1.0 sec period (F_v)	1.5
Design Spectral Response Acceleration at 0.2 sec period (S_{DS})	0.269g
Design Spectral Response Acceleration at 1.0 sec period (S_{D1})	0.097g

The soil site class is based upon conditions identified in shallow exploratory test pits/borings and local knowledge of the geotechnical conditions in the vicinity of the site. Conditions extending beyond the depth of our test pits/borings to a depth of 100 feet were assumed for the purposes of providing the information presented in the table. Based upon the density of the on-site soils and lack of groundwater, the potential settlement and lateral spread due to liquefaction is not a considered to be a significant concern on the site.

6.9 Slab-on-Grade Support

Slabs-on-grade should be supported on a minimum thickness of 1 foot of properly placed and compacted, imported, low expansive, engineered fill. For design of interior slabs-on-grade, we recommend using a modulus of subgrade reaction (k) of 200 pounds per cubic inch (pci) for the on-site soils and 225 pci for imported fill material, based on a 30-inch diameter plate. The slab subgrade should be prepared by the procedures outlined in this report. A minimum 4-inch thick layer of base course should be provided beneath all slabs to help prevent capillary rise and a damp slab.

All concrete placement and curing operations should follow the American Concrete Institute manual recommendations. Improper curing techniques and/or high slump (water-cement ratio) could cause excessive shrinkage, cracking or curling. The plastic properties of the concrete should be documented at the time of placement and specimens should also be prepared for strength testing to verify compliance with project specifications. Concrete slabs should be allowed to cure adequately before placing vinyl or other moisture sensitive floor covering.

6.10 Drainage

The major cause of soil-related foundation and slab-on-ground problems is moisture increase in soils below structures. Properly functioning conventional foundations and floor slabs-on-ground require appropriately constructed and maintained site drainage conditions. Therefore, it is extremely important that positive drainage be provided during construction and maintained throughout the life of the structures. It is also important that proper planning and control of any landscape and irrigation practices be performed.

Infiltration of water into utility or foundation excavations must be prevented during construction. Backfill against footings, exterior walls, and in utility line trenches should be well compacted and free of all construction debris to minimize the possibility of moisture infiltration. If utility line trenches are backfilled with a granular material, then a clay or concrete plug should be placed in the trench adjacent to the structure to prevent water from following the trench back under the structure.

6.11 Aggregate-Surfaced Roadways

For unpaved sections, we recommend an initial minimum thickness of 6 inches of granular cover material. As with any unbound vehicular section, additional material will be required over time as cover material is lost due to grading, snow plowing, lateral shoving, and intrusion of the cover material into the underlying subgrade soils. To help reduce intrusion, consideration should be given to the use of a geotextile separator fabric placed at the cover material/subgrade soil interface.

6.12 Corrosivity

Based on the laboratory test results, the on-site soils exhibit a low to moderate corrosive potential to ductile iron piping. This information should be used as an aid in choosing the construction materials that will be in contact with these soils and that will need to be resistant to various corrosive forces. Manufacturers' representatives should be contacted regarding the specific corrosivity resistance for their particular product.

The chemical test results indicate that the soils at the site classify as moderately corrosive to concrete, Class S1 in accordance with ACI 318, Table 4.2.1. Concrete should be made with a cement that provides sulfate resistance and that has a maximum water-cementitious materials ratio and minimum compressive strength set forth in the provisions of ACI 318, Section 4.3.

7.0 EARTHWORK

7.1 General

The conclusions contained in this report for the proposed construction are contingent upon compliance with recommendations presented in this section. Any excavating, trenching, or disturbance which occurs after completion of the earthwork must be backfilled, compacted and tested in accordance with the recommendations contained herein. It is not reasonable to rely upon our conclusions and recommendations if any future unobserved and untested trenching, grading or backfilling occurs.

Although underground facilities were not observed, such features might be encountered during construction. These features should be demolished and removed in accordance with the recommendations of the geotechnical engineer. Any loose or disturbed soils resulting from demolition and/or removal of existing facilities should also be removed and/or recompacted as engineered fill, and any excavations should be backfilled in accordance with recommendations presented herein.

7.2 Site Clearing

Strip and remove all existing fill, remaining vegetation, debris, aggregate surfacing and/or concrete pavement and any other deleterious materials from the building, tank and wastewater line area. The building/tank area is defined as that area within the structure footprint plus 5 feet beyond the perimeter of the footprint. All exposed surfaces should be free of mounds and depressions which could prevent uniform compaction.

7.3 Excavation

We anticipate that excavations into the shallow site soils for the proposed construction can be accomplished with conventional equipment. Excavations penetrating the underlying limestone will require the use of heavy-duty, specialized equipment, likely together with large pneumatic hammers, to facilitate rock break-up and removal.

Cut slopes into the shallow on-site soils should be constructed no steeper than 1:1 (horizontal:vertical) and 0.5:1 (horizontal:vertical) in the limestone bedrock. Fill slopes should be constructed no steeper than 1.5:1 (horizontal:vertical) to limit erosion, and to provide slope protection. Natural slopes exceeding a 5:1 (horizontal:vertical) slope

configuration, should be benched prior to fill placement. Natural slopes which will support fill embankments should be benched at a maximum 5:1 slope.

On-site soils will pump or become unworkable at high water contents. Workability may be improved by scarifying and drying. Overexcavation of wet zones and replacement with drier granular materials may be necessary. The use of lightweight excavation and compaction equipment may be required to minimize subgrade pumping.

7.4 Tank Pad Preparation

Following removal of any existing fill material, above-ground tanks should be founded on a minimum thickness of 1 foot of imported, properly compacted, low expansive, engineered fill material. Remove existing soils to a minimum depth of 1 foot below the bottom of the above-ground tank elevation. Following the removal, and immediately below all below-grade tanks, scarify, moisten or dry as required, and compact all subgrade soils to a minimum depth of 8 inches. The subgrade preparation should be accomplished in a manner which will result in uniform water contents and densities after compaction. In areas where dense limestone is encountered, scarification and recompaction is not required.

7.5 Spread Footing Foundation Preparation

Following removal of any existing fill material in footing areas, remove existing soils to a minimum depth of 1 foot below the bottom of the footing. Removal may extend straight down along the sides of the footing. Replace the removed soils with properly consolidated, lean mix (2-sack) concrete backfill material.

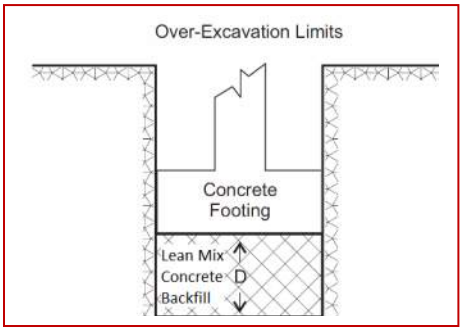

7.6 Slab-on-Grade Preparation

Following removal of any existing fill material, slabs-on-grade should be founded on a minimum thickness of 1 foot of imported, low expansive, engineered fill material. Remove native soils, as necessary, to a minimum depth of 1 foot below the bottom of the slab (depth D in the diagram below). Following the removal, scarify, moisten or dry as required, and compact all subgrade soils to a minimum depth of 8 inches. Replace the removed soils with properly compacted, imported, low to non-expansive, engineered fill material. The

aggregate base course below the slab may be included as part of the low to non-expansive engineered fill. In areas where dense limestone is encountered, scarification and recompaction is not required.

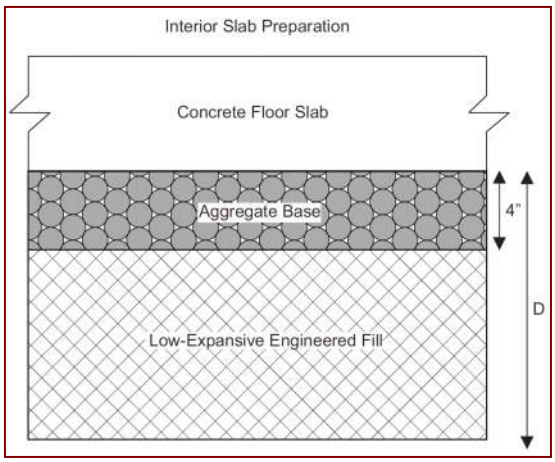

The subgrade preparation should be accomplished in a manner that will result in uniform water contents and densities after compaction.

7.7 Exterior Slab Preparation

The soils on this site have the potential to expand and shrink with changes in moisture content. In addition, frost penetration in the upper soils may cause surface heaving. Therefore, relatively lightweight exterior concrete flatwork such as sidewalks and patios may experience movements resulting in cracking or vertical offsets. To reduce the potential for damage, we recommend:

- Use of fill with low expansion potential
- Use of fill with low to negligible frost susceptibility
- Placement of effective control joints on relatively close centers
- Moisture-density control during placement of subbase fills
- Provision for adequate drainage in areas adjoining the slabs
- Use of designs which allow vertical movement between the exterior slabs and adjoining structural elements

It should be understood that these recommendations will help reduce the potential for soil movement and resulting distress, but will not eliminate this potential. Furthermore, the use of municipal specifications and details may not mitigate the potential for movements of the expansive or frost susceptible on-site soils.

7.8 Materials

a. Clean on-site native soils with a maximum dimension of 6 inches or imported materials may be used as fill material for the following:

- backfill (non-slab areas)
- Subbase fill in aggregate surfaced roadway areas

b. On-site clayey soils should not be used as subbase fill or backfill below any tanks, foundations, slabs-on-grade or behind any retaining walls. Imported soils with low expansive potential should be used in these areas.

c. Frozen soils should not be used as fill or backfill.

d. Lean mix (2-sack) concrete backfill should consist of aggregate base course type material combined with 2 sacks of cement per cubic yard. A coarse rock mix should not be used.

e. Imported soils should conform to the following:

- Gradation (ASTM C136): percent finer by weight

6"	100
4"	85-100
¾”	70-100
No. 4 Sieve	50-100
No. 200 Sieve	40 (max)

- Maximum expansive potential (%)[1] 1.5

- Maximum soluble sulfates (%) 0.10

f. Base course should conform to current Yavapai County specifications.

[1] Measured on a sample compacted to approximately 95 percent of the ASTM D698 maximum dry density at about 3 percent below optimum water content. The sample is confined under a 100 psf surcharge and submerged.

7.9 Placement and Compaction

a. Place and compact fill in horizontal lifts, using equipment and procedures that will produce recommended water contents and densities throughout the lift.

b. Uncompacted fill lifts should not exceed 8 inches.

c. Materials should be compacted to the following:

Material	Minimum Percent Compaction (ASTM D698)
• On-site soil, reworked:	
Below tanks	95
Below slabs-on-grade	90
Aggregate surfaced roadway areas	95
• On-site clayey soils, fill:	
Aggregate surfaced roadway areas	95
Landscape areas	85
• On-site low expansive potential soils, fill:	
Aggregate surfaced roadway areas	95
Below slabs-on-grade	95
Below tanks	95
• Imported soil, fill:	
Below slabs-on-grade	95
Below tanks	95
Aggregate surfaced roadway areas	95
• Aggregate base:	
Below slabs-on-grade	95
Below tanks	95
Aggregate surfaced roadway areas	100

Minimum Percent
Material Compaction (ASTM D698)

- Backfill:
  Structural 95
  Nonstructural 90

`

d. On-site soils should be compacted with a moisture content in the range of 1 percent below to 3 percent above optimum. Imported soils with low expansive potential and aggregate base course materials should be compacted with a moisture content in the range of 3 percent below to 3 percent above optimum.

7.10 Compliance

Recommendations for structural elements supported on compacted fills or prepared subgrade depend upon compliance with **EARTHWORK** recommendations. To assess compliance, observation and testing should be performed under the direction of a geotechnical engineer.

8.0 ADDITIONAL SERVICES

The recommendations provided in this report are based on the assumption that a sufficient schedule of tests and observations will be performed during construction to verify compliance. At a minimum, these tests and observations should be comprised of the following:

- Observations and testing during site preparation and earthwork;
- Observation of foundation excavations; and
- Consultation as may be required during construction.

Retaining the geotechnical engineer who developed your report to provide construction observation is the best way to verify compliance, and to help you manage the risks associated with unanticipated conditions.

9.0 LIMITATIONS

This report has been prepared assuming the project criteria described in Section 2.0. If changes in the project criteria occur, or if different subsurface conditions are encountered or become known, the conclusions and recommendations presented herein shall become invalid. In any such event, WT should be contacted in order to assess the effect that such variations may have on our conclusions and recommendations.

The recommendations presented are based entirely upon data derived from a limited number of samples obtained from widely spaced test pits/borings. The attached logs are indicators of subsurface conditions only at the specific locations and times noted. This report assumes the uniformity of the geology and soil structure between test pits/borings, however variations can and often do exist. Whenever any deviation, difference or change is encountered or becomes known, WT should be contacted.

This report is for the exclusive benefit of our client alone. There are no intended third-party beneficiaries of our contract with the client or this report, and nothing contained in the contract or this report shall create any express or implied contractual or any other relationship with, or claim or cause of action for, any third party against WT.

This report is valid for the earlier of one year from the date of issuance, a change in circumstances, or discovered variations. After expiration, no person or entity shall rely on this report without the express written authorization of WT.

10.0 CLOSURE

We prepared this report as an aid to the designers of the proposed project. The comments, statements, recommendations and conclusions set forth in this report reflect the opinions of the authors. These opinions are based upon data obtained at the location of the test pits/borings, and from laboratory tests. Work on your project was performed in accordance with generally accepted standards and practices utilized by professionals providing similar services in this locality. No other warranty, express or implied, is made.

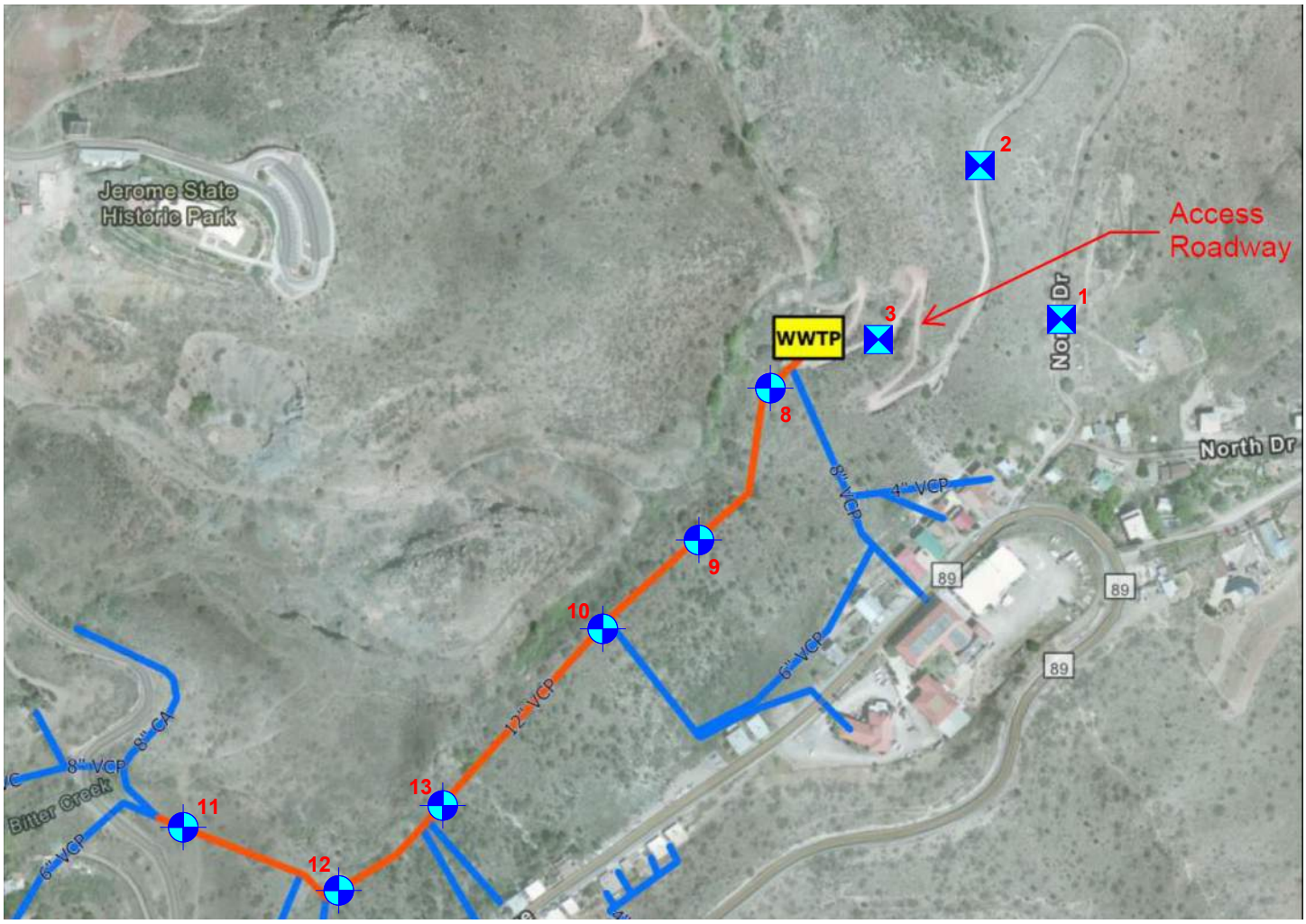

Not to Scale

Approximate Hand Auger Boring Location

Approximate Test Pit Location

JEROME WWTP UPGRADES	
Boring/Test Pit Location Diagram	
Western Technologies Inc.	
Job No.: 2522JW197	Plate: 1

Geotechnical Environmental Inspections Materials

Western Technologies Inc. The Quality People Since 1955

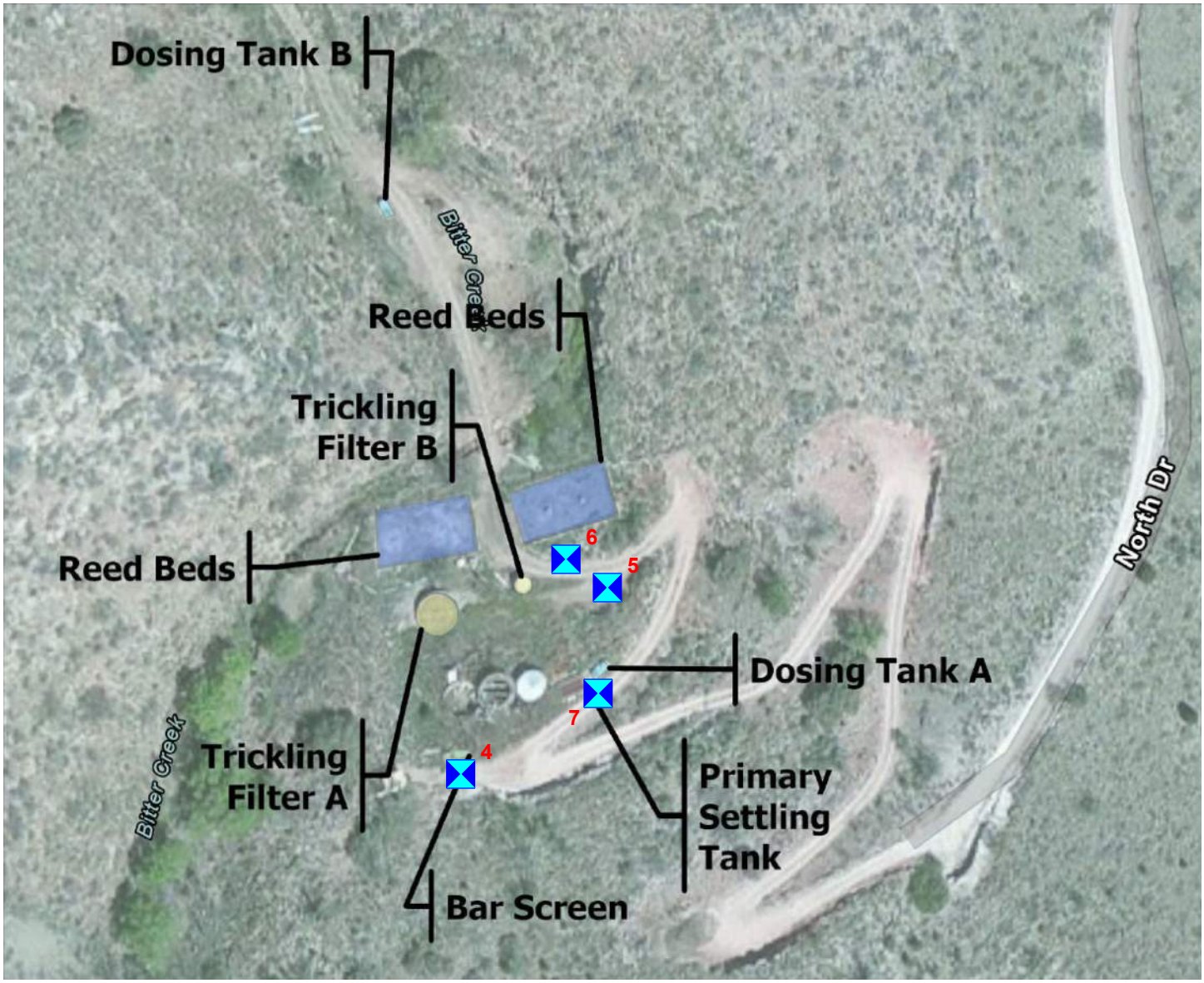

Not to Scale

Approximate Test Pit Location

JEROME WWTP UPGRADES	
Test Pit Location Diagram	
Western Technologies Inc.	
Job No.: 2522JW197	Plate: 2

Geotechnical Environmental Inspections Materials

Western Technologies Inc. The Quality People Since 1955

Allowable Soil Bearing Capacity	The recommended maximum contact stress developed at the interface of the foundation element and the supporting material.
Backfill	A specified material placed and compacted in a confined area.
Base Course	A layer of specified aggregate material placed on a subgrade or subbase.
Base Course Grade	Top of base course.
Bench	A horizontal surface in a sloped deposit.
Caisson/Drilled Shaft	A concrete foundation element cast in a circular excavation which may have an enlarged base (or belled caisson).
Concrete Slabs-On-Grade	A concrete surface layer cast directly upon base course, subbase or subgrade.
Crushed Rock Base Course	A base course composed of crushed rock of a specified gradation.
Differential Settlement	Unequal settlement between or within foundation elements of a structure.
Engineered Fill	Specified soil or aggregate material placed and compacted to specified density and/or moisture conditions under observations of a representative of a soil engineer.
Existing Fill	Materials deposited through the action of man prior to exploration of the site.
Existing Grade	The ground surface at the time of field exploration.
Expansive Potential	The potential of a soil to expand (increase in volume) due to absorption of moisture.
Fill	Materials deposited by the actions of man.
Finished Grade	The final grade created as a part of the project.
Gravel Base Course	A base course composed of naturally occurring gravel with a specified gradation.
Heave	Upward movement.
Native Grade	The naturally occurring ground surface.
Native Soil	Naturally occurring on-site soil.
Rock	A natural aggregate of mineral grains connected by strong and permanent cohesive forces. Usually requires drilling, wedging, blasting or other methods of extraordinary force for excavation.
Sand and Gravel Base Course	A base course of sand and gravel of a specified gradation.
Sand Base Course	A base course composed primarily of sand of a specified gradation.
Scarify	To mechanically loosen soil or break down existing soil structure.
Settlement	Downward movement.
Soil	Any unconsolidated material composed of discrete solid particles, derived from the physical and/or chemical disintegration of vegetable or mineral matter, which can be separated by gentle mechanical means such as agitation in water.
Strip	To remove from present location.
Subbase	A layer of specified material placed to form a layer between the subgrade and base course.
Subbase Grade	Top of subbase.
Subgrade	Prepared native soil surface.

©81WTI
091614

COARSE-GRAINED SOILS

LESS THAN 50% FINES

GROUP SYMBOLS	DESCRIPTION	MAJOR DIVISIONS
GW	WELL-GRADED GRAVEL OR WELL-GRADED GRAVEL WITH SAND, LESS THAN 5% FINES	GRAVELS MORE THAN HALF OF COARSE FRACTION IS LARGER THAN NO. 4 SIEVE SIZE
GP	POORLY-GRADED GRAVEL OR POORLY-GRADED GRAVEL WITH SAND, LESS THAN 5% FINES	
GM	SILTY GRAVEL OR SILTY GRAVEL WITH SAND, MORE THAN 12% FINES	
GC	CLAYEY GRAVEL OR CLAYEY GRAVEL WITH SAND, MORE THAN 12% FINES	
SW	WELL-GRADED SAND OR WELL-GRADED SAND WITH GRAVEL, LESS THAN 5% FINES	SANDS MORE THAN HALF OF COARSE FRACTION IS SMALLER THAN NO. 4 SIEVE SIZE
SP	POORLY-GRADED SAND OR POORLY-GRADED SAND WITH GRAVEL, LESS THAN 5% FINES	
SM	SILTY SAND OR SILTY SAND WITH GRAVEL, MORE THAN 12% FINES	
SC	CLAYEY SAND OR CLAYEY SAND WITH GRAVEL, MORE THAN 12% FINES	

NOTE: Coarse-grained soils receive dual symbols if they contain 5% to 12% fines (e.g., SW-SM, GP-GC).

FINE-GRAINED SOILS

MORE THAN 50% FINES

GROUP SYMBOLS	DESCRIPTION	MAJOR DIVISIONS
ML	SILT, SILT WITH SAND OR GRAVEL, SANDY SILT, OR GRAVELLY SILT	SILTS AND CLAYS LIQUID LIMIT LESS THAN 50
CL	LEAN CLAY OF LOW TO MEDIUM PLASTICITY, SANDY CLAY, OR GRAVELLY CLAY	
OL	ORGANIC SILT OR ORGANIC CLAY OF LOW TO MEDIUM PLASTICITY	
MH	ELASTIC SILT, SANDY ELASTIC SILT, OR GRAVELLY ELASTIC SILT	SILTS AND CLAYS LIQUID LIMIT MORE THAN 50
CH	FAT CLAY OF HIGH PLASTICITY, SANDY FAT CLAY, OR GRAVELLY FAT CLAY	
OH	ORGANIC SILT OR ORGANIC CLAY OF HIGH PLASTICITY	
PT	PEAT AND OTHER HIGHLY ORGANIC SOILS	HIGHLY ORGANIC SOILS

NOTE: Fine-grained soils may receive dual classification based upon plasticity characteristics (e.g. CL-ML).

SOIL SIZES

COMPONENT	SIZE RANGE
BOULDERS	Above 12 in.
COBBLES	3 in. – 12 in.
GRAVEL	No. 4 – 3 in.
Coarse	¾ in. – 3 in.
Fine	No. 4 – ¾ in.
SAND	No. 200 – No. 4
Coarse	No. 10 – No. 4
Medium	No. 40 – No. 10
Fine	No. 200 – No. 40
Fines (Silt or Clay)	Below No. 200

NOTE: Only sizes smaller than three inches are used to classify soils

CONSISTENCY

CLAYS & SILTS	BLOWS PER FOOT
VERY SOFT	0 – 2
SOFT	3 – 4
FIRM	5 – 8
STIFF	9 – 15
VERY STIFF	16 – 30
HARD	OVER 30

RELATIVE DENSITY

SANDS & GRAVELS	BLOWS PER FOOT
VERY LOOSE	0 – 4
LOOSE	5 – 10
MEDIUM DENSE	11 – 30
DENSE	31 – 50
VERY DENSE	OVER 50

NOTE: Number of blows using 140-pound hammer falling 30 inches to drive a 2-inch-OD (1⅜-inch ID) split-barrel sampler (ASTM D1586).

PLASTICITY OF FINE GRAINED SOILS

PLASTICITY INDEX	TERM
0	NON-PLASTIC
1 – 7	LOW
8 – 20	MEDIUM
Over 20	HIGH

DEFINITION OF WATER CONTENT

DRY
SLIGHTLY DAMP
DAMP
MOIST
WET
SATURATED

©81 WTI
090414

The number shown in **"BORING NO."** or "**TEST PIT NO.**" refers to the approximate location of the same number indicated on the "Boring/Test Pit Location Diagram" as positioned in the field by pacing or measurement from property lines and/or existing features.

"DRILLING TYPE" refers to the exploratory equipment used in the boring. Hand auger methods were used. The dimension presented is the outside diameter of the auger used.

"EQUIPMENT TYPE" refers to the equipment used in the excavation of the test pit, and may include the width of the bucket on the excavator and the use of "rock" teeth or attachments.

"SAMPLE TYPE" refers to the form of sample recovery, in which **R** = Ring-lined sample, **G** = Grab sample.

"DRY DENSITY (LBS/CU FT)" refers to the laboratory-determined dry density in pounds per cubic foot. The symbol **"NR"** indicates that no sample was recovered.

"WATER (MOISTURE) CONTENT (% OF DRY WT.)" refers to the laboratory-determined water content in percent using the standard test method ASTM D2216.

"USCS" refers to the "Unified Soil Classification System" Group Symbol for the soil type as defined by ASTM D2487 and D2488. The soils were classified visually in the field, and where appropriate, classifications were modified by visual examination of samples in the laboratory and/or by appropriate tests.

These notes and boring/test pit logs are intended for use in conjunction with the purposes of our services defined in the text. Boring/test pit log data should not be construed as part of the construction plans nor as defining construction conditions.

Boring/test pit logs depict our interpretations of subsurface conditions at the locations and on the date(s) noted. Variations in subsurface conditions and characteristics may occur between borings/test pits. Groundwater levels may fluctuate due to seasonal variations and other factors.

The stratification lines shown on the boring/test pit logs represent our interpretation of the approximate boundary between soil or rock types based upon visual field classification at the boring/test pit location. The transition between materials is approximate and may be more or less gradual than indicated.

©81WTI
091614

DATE EXCAVATED: **9-16-22**
LOCATION: **See Location Diagram**
ELEVATION: **Not Determined**

TEST PIT NO. 1

EQUIPMENT: **CASE 580N**
EXCAVATION TYPE: **24" BUCKET**
FIELD ENGINEER: **C. Bartlett**

MOISTURE CONTENT (% OF DRY WT.)	DRY DENSITY (LBS/CU FT)	SAMPLE TYPE	SAMPLE	BLOWS/FT.	DEPTH (FEET)	USCS	GRAPHIC	SOIL DESCRIPTION
								AGGREGATE BASE COURSE (3 Inches Thick)
		G				GM		Silty GRAVEL; with sand, cobbles and boulders, tan, slightly damp
					5			**Excavation Stopped at 5 Feet**
					10			

N- **STANDARD PENETRATION TEST**
R- **RING SAMPLE**
C- **CORE: %RECOVERY/RQD**
G- **GRAB SAMPLE**
B- **BUCKET SAMPLE**

NOTES: **Groundwater Not Encountered**

THIS SUMMARY APPLIES ONLY AT THIS LOCATION AND AT THE TIME OF LOGGING. CONDITIONS MAY DIFFER AT OTHER LOCATIONS AND MAY CHANGE AT THIS LOCATION WITH TIME. DATA PRESENTED IS A SIMPLIFICATION.

Geotechnical Environmental Inspections Materials

Western Technologies Inc.
The Quality People
Since 1955

PROJECT: **JEROME WWTP IMPROVEMENTS**
PROJECT NO.: **2522JW197**

PLATE **A-4**

TEST PIT LOG

DATE EXCAVATED: **9-16-22**
LOCATION: **See Location Diagram**
ELEVATION: **Not Determined**

TEST PIT NO. 2

EQUIPMENT: **CASE 580N**
EXCAVATION TYPE: **24" BUCKET**
FIELD ENGINEER: **C. Bartlett**

MOISTURE CONTENT (% OF DRY WT.)	DRY DENSITY (LBS/CU FT)	SAMPLE TYPE	SAMPLE	BLOWS/FT.	DEPTH (FEET)	USCS	GRAPHIC	SOIL DESCRIPTION
		G				SC		Clayey SAND; with gravel, cobbles and boulders, tan, slightly damp
4.4	87	R		Push				
					5			**Excavation Stopped at 5 Feet**
					10			

N- **STANDARD PENETRATION TEST**
R- **RING SAMPLE**
C- **CORE: %RECOVERY/RQD**
G- **GRAB SAMPLE**
B- **BUCKET SAMPLE**

NOTES: **Groundwater Not Encountered**

THIS SUMMARY APPLIES ONLY AT THIS LOCATION AND AT THE TIME OF LOGGING. CONDITIONS MAY DIFFER AT OTHER LOCATIONS AND MAY CHANGE AT THIS LOCATION WITH TIME. DATA PRESENTED IS A SIMPLIFICATION.

Geotechnical Environmental Inspections Materials

Western Technologies Inc.
The Quality People
Since 1955

PROJECT: **JEROME WWTP IMPROVEMENTS**
PROJECT NO.: **2522JW197**

PLATE **A-5**

TEST PIT LOG

DATE EXCAVATED: **9-16-22**
LOCATION: **See Location Diagram**
ELEVATION: **Not Determined**

TEST PIT NO. 3

EQUIPMENT: **CASE 580N**
EXCAVATION TYPE: **24" BUCKET**
FIELD ENGINEER: **C. Bartlett**

MOISTURE CONTENT (% OF DRY WT.)	DRY DENSITY (LBS/CU FT)	SAMPLE TYPE	SAMPLE	BLOWS/FT.	DEPTH (FEET)	USCS	GRAPHIC	SOIL DESCRIPTION
		G				GC		Clayey GRAVEL; with sand, cobbles and boulders, tan, slightly damp
3.4	99	R		Push				
					5			**Excavation Stopped at 5 Feet**
					10			

N- **STANDARD PENETRATION TEST**
R- **RING SAMPLE**
C- **CORE: %RECOVERY/RQD**
G- **GRAB SAMPLE**
B- **BUCKET SAMPLE**

NOTES: **Groundwater Not Encountered**

THIS SUMMARY APPLIES ONLY AT THIS LOCATION AND AT THE TIME OF LOGGING. CONDITIONS MAY DIFFER AT OTHER LOCATIONS AND MAY CHANGE AT THIS LOCATION WITH TIME. DATA PRESENTED IS A SIMPLIFICATION.

Geotechnical Environmental Inspections Materials

Western Technologies Inc.
The Quality People
Since 1955

PROJECT: **JEROME WWTP IMPROVEMENTS**
PROJECT NO.: **2522JW197**

PLATE **A-6**

TEST PIT LOG

DATE EXCAVATED: **9-16-22**
LOCATION: **See Location Diagram**
ELEVATION: **Not Determined**

TEST PIT NO. 4

EQUIPMENT: **CASE 580N**
EXCAVATION TYPE: **24" BUCKET**
FIELD ENGINEER: **C. Bartlett**

MOISTURE CONTENT (% OF DRY WT.)	DRY DENSITY (LBS/CU FT)	SAMPLE TYPE	SAMPLE	BLOWS/FT.	DEPTH (FEET)	USCS	GRAPHIC	SOIL DESCRIPTION
		G				GC		Clayey GRAVEL; with sand, cobbles and boulders, light brown, slightly damp
					5			**Excavator Refusal at 3 Feet on LIMESTONE**
					10			

N- **STANDARD PENETRATION TEST**
R- **RING SAMPLE**
C- **CORE: %RECOVERY/RQD**
G- **GRAB SAMPLE**
B- **BUCKET SAMPLE**

NOTES: **Groundwater Not Encountered**

THIS SUMMARY APPLIES ONLY AT THIS LOCATION AND AT THE TIME OF LOGGING. CONDITIONS MAY DIFFER AT OTHER LOCATIONS AND MAY CHANGE AT THIS LOCATION WITH TIME. DATA PRESENTED IS A SIMPLIFICATION.

Geotechnical Environmental Inspections Materials

Western Technologies Inc.
The Quality People
Since 1955

PROJECT: **JEROME WWTP IMPROVEMENTS**
PROJECT NO.: **2522JW197**

PLATE **A-7**

TEST PIT LOG

DATE EXCAVATED: **9-16-22**
LOCATION: **See Location Diagram**
ELEVATION: **Not Determined**

TEST PIT NO. 5

EQUIPMENT: **CASE 580N**
EXCAVATION TYPE: **24" BUCKET**
FIELD ENGINEER: **C. Bartlett**

MOISTURE CONTENT (% OF DRY WT.)	DRY DENSITY (LBS/CU FT)	SAMPLE TYPE	SAMPLE	BLOWS/FT.	DEPTH (FEET)	USCS	GRAPHIC	SOIL DESCRIPTION
		G			0	GC		Clayey GRAVEL; with sand, cobbles and boulders, brown, damp
					5			
					8			**Excavator Refusal at 8 Feet on LIMESTONE**
					10			

N- **STANDARD PENETRATION TEST**
R- **RING SAMPLE**
C- **CORE: %RECOVERY/RQD**
G- **GRAB SAMPLE**
B- **BUCKET SAMPLE**

NOTES: **Groundwater Not Encountered**

THIS SUMMARY APPLIES ONLY AT THIS LOCATION AND AT THE TIME OF LOGGING. CONDITIONS MAY DIFFER AT OTHER LOCATIONS AND MAY CHANGE AT THIS LOCATION WITH TIME. DATA PRESENTED IS A SIMPLIFICATION.

Geotechnical Environmental Inspections Materials

Western Technologies Inc.
The Quality People
Since 1955

PROJECT: **JEROME WWTP IMPROVEMENTS**
PROJECT NO.: **2522JW197**

PLATE **A-8**

TEST PIT LOG

DATE EXCAVATED: **9-16-22**
LOCATION: **See Location Diagram**
ELEVATION: **Not Determined**

TEST PIT NO. 6

EQUIPMENT: **CASE 580N**
EXCAVATION TYPE: **24" BUCKET**
FIELD ENGINEER: **C. Bartlett**

MOISTURE CONTENT (% OF DRY WT.)	DRY DENSITY (LBS/CU FT)	SAMPLE TYPE	SAMPLE	BLOWS/FT.	DEPTH (FEET)	USCS	GRAPHIC	SOIL DESCRIPTION
		G			0	GC		Clayey GRAVEL; with sand, cobbles and boulders, brown, damp
					5			
					8			**Excavator Refusal at 8 Feet on LIMESTONE**
					10			

N- **STANDARD PENETRATION TEST**
R- **RING SAMPLE**
C- **CORE: %RECOVERY/RQD**
G- **GRAB SAMPLE**
B- **BUCKET SAMPLE**

NOTES: **Groundwater Not Encountered**

THIS SUMMARY APPLIES ONLY AT THIS LOCATION AND AT THE TIME OF LOGGING. CONDITIONS MAY DIFFER AT OTHER LOCATIONS AND MAY CHANGE AT THIS LOCATION WITH TIME. DATA PRESENTED IS A SIMPLIFICATION.

Geotechnical Environmental Inspections Materials

Western Technologies Inc.
The Quality People
Since 1955

PROJECT: **JEROME WWTP IMPROVEMENTS**
PROJECT NO.: **2522JW197**

PLATE **A-9**

TEST PIT LOG

DATE EXCAVATED: **9-16-22**
LOCATION: **See Location Diagram**
ELEVATION: **Not Determined**

TEST PIT NO. 7

EQUIPMENT: **CASE 580N**
EXCAVATION TYPE: **24" BUCKET**
FIELD ENGINEER: **C. Bartlett**

MOISTURE CONTENT (% OF DRY WT.)	DRY DENSITY (LBS/CU FT)	SAMPLE TYPE	SAMPLE	BLOWS/FT.	DEPTH (FEET)	USCS	GRAPHIC	SOIL DESCRIPTION
		G				GC		Clayey GRAVEL; with sand, cobbles and boulders, brown, damp
					5			**Excavator Refusal at 5 Feet on LIMESTONE**
					10			

N- **STANDARD PENETRATION TEST**
R- **RING SAMPLE**
C- **CORE: %RECOVERY/RQD**
G- **GRAB SAMPLE**
B- **BUCKET SAMPLE**

NOTES: **Groundwater Not Encountered**

THIS SUMMARY APPLIES ONLY AT THIS LOCATION AND AT THE TIME OF LOGGING. CONDITIONS MAY DIFFER AT OTHER LOCATIONS AND MAY CHANGE AT THIS LOCATION WITH TIME. DATA PRESENTED IS A SIMPLIFICATION.

Geotechnical Environmental Inspections Materials

Western Technologies Inc.
The Quality People
Since 1955

PROJECT: **JEROME WWTP IMPROVEMENTS**
PROJECT NO.: **2522JW197**

PLATE
A-10

TEST PIT LOG

DATE DRILLED: **9-16-22**
LOCATION: **See Location Diagram**
ELEVATION: **Not Determined**

BORING NO. 8

EQUIPMENT TYPE: **HAND AUGER**
DRILLING TYPE: **4" DIA. AUGER**
FIELD ENGINEER: **C. Bartlett**

MOISTURE CONTENT (% OF DRY WT)	DRY DENSITY (LBS/CU FT)	SAMPLE TYPE	SAMPLE	BLOWS/FT.	DEPTH (FEET)	USCS	GRAPHIC	SOIL DESCRIPTION
		G				GC		Clayey GRAVEL; with sand, cobbles and boulders, brown, slightly damp
								Hand Auger Refusal at 1 Foot on Cobbles and Boulders
					5			
					10			

N- STANDARD PENETRATION TEST
R- RING SAMPLE
CA- CALIFORNIA MODIFIED SAMPLER
G- GRAB SAMPLE
B- BUCKET SAMPLE

NOTES: **Groundwater Not Encountered**

THIS SUMMARY APPLIES ONLY AT THIS LOCATION AND AT THE TIME OF LOGGING. CONDITIONS MAY DIFFER AT OTHER LOCATIONS AND MAY CHANGE AT THIS LOCATION WITH TIME. DATA PRESENTED IS A SIMPLIFICATION.

Geotechnical Environmental Inspections Materials

Western Technologies Inc.
The Quality People
Since 1955

PROJECT: **JEROME WWTP IMPROVEMENTS**
PROJECT NO.: **2522JW197**

PLATE **A-11**

BORING LOG

DATE DRILLED: **9-16-22**
LOCATION: **See Location Diagram**
ELEVATION: **Not Determined**

BORING NO. 9

EQUIPMENT TYPE: **HAND AUGER**
DRILLING TYPE: **4" DIA. AUGER**
FIELD ENGINEER: **C. Bartlett**

MOISTURE CONTENT (% OF DRY WT)	DRY DENSITY (LBS/CU FT)	SAMPLE TYPE	SAMPLE	BLOWS/FT.	DEPTH (FEET)	USCS	GRAPHIC	SOIL DESCRIPTION
		G				SC		Clayey SAND; with gravel, cobbles and boulders, brown, slightly damp
								Hand Auger Refusal at 1 Foot on Cobbles and Boulders
					5			
					10			

N- STANDARD PENETRATION TEST
R- RING SAMPLE
CA- CALIFORNIA MODIFIED SAMPLER
G- GRAB SAMPLE
B- BUCKET SAMPLE

NOTES: **Groundwater Not Encountered**

THIS SUMMARY APPLIES ONLY AT THIS LOCATION AND AT THE TIME OF LOGGING. CONDITIONS MAY DIFFER AT OTHER LOCATIONS AND MAY CHANGE AT THIS LOCATION WITH TIME. DATA PRESENTED IS A SIMPLIFICATION.

Geotechnical Environmental Inspections Materials

Western Technologies Inc.
The Quality People
Since 1955

PROJECT: **JEROME WWTP IMPROVEMENTS**
PROJECT NO.: **2522JW197**

PLATE **A-12**

BORING LOG

DATE DRILLED: **9-16-22**
LOCATION: **See Location Diagram**
ELEVATION: **Not Determined**

BORING NO. 10

EQUIPMENT TYPE: **HAND AUGER**
DRILLING TYPE: **4" DIA. AUGER**
FIELD ENGINEER: **C. Bartlett**

MOISTURE CONTENT (% OF DRY WT)	DRY DENSITY (LBS/CU FT)	SAMPLE TYPE	SAMPLE	BLOWS/FT.	DEPTH (FEET)	USCS	GRAPHIC	SOIL DESCRIPTION
		G				GC		Clayey GRAVEL; with sand, cobbles and boulders, brown, slightly damp
								Hand Auger Refusal at 1 Foot on Cobbles and Boulders
					5			
					10			

N- STANDARD PENETRATION TEST
R- RING SAMPLE
CA- CALIFORNIA MODIFIED SAMPLER
G- GRAB SAMPLE
B- BUCKET SAMPLE

NOTES: **Groundwater Not Encountered**

THIS SUMMARY APPLIES ONLY AT THIS LOCATION AND AT THE TIME OF LOGGING. CONDITIONS MAY DIFFER AT OTHER LOCATIONS AND MAY CHANGE AT THIS LOCATION WITH TIME. DATA PRESENTED IS A SIMPLIFICATION.

Geotechnical Environmental Inspections Materials
Western Technologies Inc.
The Quality People
Since 1955

PROJECT: **JEROME WWTP IMPROVEMENTS**
PROJECT NO.: **2522JW197**

PLATE **A-13**

BORING LOG

DATE DRILLED: **9-16-22**
LOCATION: **See Location Diagram**
ELEVATION: **Not Determined**

BORING NO. 11

EQUIPMENT TYPE: **HAND AUGER**
DRILLING TYPE: **4" DIA. AUGER**
FIELD ENGINEER: **C. Bartlett**

MOISTURE CONTENT (% OF DRY WT)	DRY DENSITY (LBS/CU FT)	SAMPLE TYPE	SAMPLE	BLOWS/FT.	DEPTH (FEET)	USCS	GRAPHIC	SOIL DESCRIPTION
		G				GC		Clayey GRAVEL; with sand, cobbles and boulders, brown, slightly damp
								Hand Auger Refusal at 1 Foot on Cobbles and Boulders
					5			
					10			

N- STANDARD PENETRATION TEST
R- RING SAMPLE
CA- CALIFORNIA MODIFIED SAMPLER
G- GRAB SAMPLE
B- BUCKET SAMPLE

NOTES: **Groundwater Not Encountered**

THIS SUMMARY APPLIES ONLY AT THIS LOCATION AND AT THE TIME OF LOGGING. CONDITIONS MAY DIFFER AT OTHER LOCATIONS AND MAY CHANGE AT THIS LOCATION WITH TIME. DATA PRESENTED IS A SIMPLIFICATION.

Geotechnical Environmental Inspections Materials

Western Technologies Inc.
The Quality People
Since 1955

PROJECT: **JEROME WWTP IMPROVEMENTS**
PROJECT NO.: **2522JW197**

PLATE **A-14**

BORING LOG

DATE DRILLED: **9-16-22**
LOCATION: **See Location Diagram**
ELEVATION: **Not Determined**

BORING NO. 12

EQUIPMENT TYPE: **HAND AUGER**
DRILLING TYPE: **4" DIA. AUGER**
FIELD ENGINEER: **C. Bartlett**

MOISTURE CONTENT (% OF DRY WT)	DRY DENSITY (LBS/CU FT)	SAMPLE TYPE	SAMPLE	BLOWS/FT.	DEPTH (FEET)	USCS	GRAPHIC	SOIL DESCRIPTION
		G				GM		Silty GRAVEL; with sand, cobbles and boulders, brown, slightly damp
								Hand Auger Refusal at 1 Foot on Cobbles and Boulders
					5			
					10			

N- STANDARD PENETRATION TEST
R- RING SAMPLE
CA- CALIFORNIA MODIFIED SAMPLER
G- GRAB SAMPLE
B- BUCKET SAMPLE

NOTES: **Groundwater Not Encountered**

THIS SUMMARY APPLIES ONLY AT THIS LOCATION AND AT THE TIME OF LOGGING. CONDITIONS MAY DIFFER AT OTHER LOCATIONS AND MAY CHANGE AT THIS LOCATION WITH TIME. DATA PRESENTED IS A SIMPLIFICATION.

Geotechnical Environmental Inspections Materials

Western Technologies Inc. The Quality People Since 1955

PROJECT: **JEROME WWTP IMPROVEMENTS**
PROJECT NO.: **2522JW197**

PLATE **A-15**

BORING LOG

DATE DRILLED: **9-16-22**
LOCATION: **See Location Diagram**
ELEVATION: **Not Determined**

BORING NO. 13

EQUIPMENT TYPE: **HAND AUGER**
DRILLING TYPE: **4" DIA. AUGER**
FIELD ENGINEER: **C. Bartlett**

MOISTURE CONTENT (% OF DRY WT)	DRY DENSITY (LBS/CU FT)	SAMPLE TYPE	SAMPLE	BLOWS/FT.	DEPTH (FEET)	USCS	GRAPHIC	SOIL DESCRIPTION
		G				GC		Clayey GRAVEL; with sand, cobbles and boulders, brown, slightly damp
								Hand Auger Refusal at 1 Foot on Cobbles and Boulders
					5			
					10			

N- STANDARD PENETRATION TEST
R- RING SAMPLE
CA- CALIFORNIA MODIFIED SAMPLER
G- GRAB SAMPLE
B- BUCKET SAMPLE

NOTES: **Groundwater Not Encountered**

THIS SUMMARY APPLIES ONLY AT THIS LOCATION AND AT THE TIME OF LOGGING. CONDITIONS MAY DIFFER AT OTHER LOCATIONS AND MAY CHANGE AT THIS LOCATION WITH TIME. DATA PRESENTED IS A SIMPLIFICATION.

Geotechnical Environmental Inspections Materials

Western Technologies Inc.
The Quality People
Since 1955

PROJECT: **JEROME WWTP IMPROVEMENTS**
PROJECT NO.: **2522JW197**

PLATE **A-16**

BORING LOG

Test Pit/ Boring No.	Depth (ft)	USCS Class.	Particle Size Distribution (%) Passing by Weight							Atterberg Limits		Laboratory Compaction Characteristics			Remarks
			3"	¾"	#4	#10	#40	#200	2µ	LL	PI	Dry Density (pcf)	Optimum Moisture (%)	Method	
1	0-5	GM	100	71	56	48	31	15.5			NP				2
6	0-5	GC	100	69	50	41	30	18.3		43	18				2
7	0-5	GC	100	77	59	49	35	21.6		37	20				2
9	0-1	SC	100	87	71	57	40	25.6		41	16				2
12	0-1	GM	100	74	56	50	44	26.4		42	14				2

NOTE: NP = Non-plastic
µ = microns (2µ = 0.002mm)

REMARKS

Classification / Particle Size / Moisture-Density Relationship

1. Visual
2. Laboratory Tested
3. Minus #200 Only
4. Test Method ASTM D698/AASHTO T99
5. Test Method ASTM D1557/AASHTO T180
6. From the ADOT Family of Curves

Geotechnical Environmental Inspections Materials
Western Technologies Inc.
The Quality People
Since 1955
wt-us.com

PROJECT: TOWN OF JEROME WWTP IMPROVEMENTS

JOB NO.: 2522JW197

PLATE

B-1

SOIL PROPERTIES

Test Pit No.	Depth (ft.)	USCS Class.	Initial Dry Density (pcf)	Initial Water Content (%)	Laboratory Compaction Characteristics			Expansion Properties		Plasticity		Soluble		Remarks
					Dry Density(pcf)	Optimum Moisture(%)	Method	Surcharge (ksf)	Expansion (%)	LL	PI	Salts (ppm)	Sulfate (ppm)	
6	0-5	GC	91.5	17.4	96.4	20.3	A	0.1	1.9					1,2,3
7	0-5	GC	109.8	12.0	115.7	14.9	A	0.1	2.1					1,2,3

Notes: Initial Dry Density and Initial Water Content are remolded.

Remarks

1. Compacted density (approx. 95% of ASTM D698 max. density at moisture content slightly below optimum.)
2. Submerged to approximate saturation.
3. Test Method ASTM D698/AASHTO T99
4. Test Method ASTM D1557/AASHTO T180
5. From the ADOT Family of Curves

Geotechnical Environmental Inspections Materials

Western Technologies Inc. The Quality People Since 1955

wt-us.com

PROJECT: TOWN OF JEROME WWTP IMPROVEMENTS

JOB NO.: 2522JW197

SOIL PROPERTIES

PLATE

B-2

Test No.	Depth (ft)	Rock Classification	Unit Weight (pcf)	Unconfined Compressive Strength (psi)	Remarks
1	Surface	Limestone	166.7	4,150	1,2
2	Surface	Limestone	167.8	10,940	1,2

REMARKS:

1. ASTM D7012 – Unit Weight of Rock Cores
2. ASTM C39 – Unconfined Compressive Strength of Rock Cores

Geotechnical Environmental Inspections Materials

Western Technologies Inc. The Quality People Since 1955

wt-us.com

PROJECT: TOWN OF JEROME WWTP IMPROVEMENTS

JOB NO.: 2522JW197

PLATE

B-3

ROCK PROPERTIES

CORROSIVITY TEST RESULTS

The procedures for soil survey tests and observations can be found in Appendix X1.1 of ASTM A674-10 and includes five soil properties: earth resistivity • pH • redox potential • sulfides • moisture.

Test Pit 7(0-5):

Analysis	Results		Points
Resistivity (ohm-cm)	1401		10
pH	8.5		0
Redox Potential (mV)	+134		0
Sulfides	trace		2
Moisture	fair		1
		Total Points	13

Boring 12(0-1):

Analysis	Results		Points
Resistivity (ohm-cm)	2481		2
pH	8.1		0
Redox Potential (mV)	+314		0
Sulfides	trace		2
Moisture	fair		1
		Total Points	5

The test procedure states that if the sum of the points is greater than 10, the soil is considered corrosive to ductile iron pipe and special protection against exterior corrosion is necessary. This conclusion is limited to soil corrosion and does not include consideration of stray direct current.

MOTZZ LABORATORY, INC.

Report: 943846
Reported: 9/28/2022
Received: 9/26/2022
PO: 2522P176

Laboratory Analysis Report

Western Technologies - Flagstaff
Gregory L. E. Burr
2400 East Huntington
Flagstaff, AZ 86004-8934

Project: 2522JW197

Lab Number	Sample ID
943846-2	1 (0-5')

Test Parameter

Test	*Method*	*Result*	*Units*
Soluble Salts	ARIZ 237b	1162	ppm
Sulfate	ARIZ 733b	236	ppm
Chloride	ARIZ 736b	7	ppm

Lab Number	Sample ID
943846-1	12 (0-1')

Test Parameter

Test	*Method*	*Result*	*Units*
Soluble Salts	ARIZ 237b	303	ppm
Sulfate	ARIZ 733b	15	ppm
Chloride	ARIZ 736b	7	ppm
Redox Potential	ASTM G200-09	314	(Eo) mV

Plate B-5

Appendix B – MAG Standard Details

SECTION 321

PLACEMENT AND CONSTRUCTION OF ASPHALT CONCRETE PAVEMENT

321.1 DESCRIPTION:

This section is to provide specifications for furnishing all materials, mixing at a plant, hauling and placing a mixture of aggregate materials, mineral admixture and asphalt binder to form a pavement course for placement upon a previously prepared base or subbase.

321.2 MATERIALS AND MANUFACTURE:

The materials shall conform to Section 710 for the type specified. Warm Mix Asphalt (WMA) technologies may be used within the mixture provided all requirements of the specifications are met, and the technology is on the ADOT approved product list. The specific required mix type shall be called out in the contract documents or as directed by the Engineer.

321.3 WEATHER AND MOISTURE CONDITIONS:

Asphalt concrete shall be placed only when the surface is dry, and when the atmospheric temperature in the shade is 40 degrees F. (50 degrees F for Asphalt Concrete lift less than 2-inch thick) or greater. No asphalt concrete shall be placed when the weather is foggy or rainy, or when the base or subbase on which the material is to be placed is unstable. Asphalt concrete shall be placed only when the Engineer determines that weather conditions are suitable.

321.4 APPLICATION OF TACK COAT:

A tack coat shall be applied to all existing and to each new course of asphalt concrete prior to the placing of a succeeding lift of asphalt concrete. If approved by the Engineer, the tack coat may be deleted when a succeeding layer of asphalt concrete is being applied over a freshly laid course that has been subjected to very little traffic.

The application of the tack coat shall comply with Section 329. The grade of emulsified asphalt shall be SS-1h or CSS-1h as specified in Section 713. The same material that is specified above for the tack coat shall be applied to the vertical surfaces of existing pavements, curbs, and gutters, against which asphalt concrete is to be placed.

The surface to be covered may require repair or patching as directed by the Engineer. This shall be addressed in the project specifications prior to the bidding of the project.

321.5 MIX DESIGN:

The mix design shall be submitted to the Engineer at least five working days prior to the start of asphalt concrete production. Mix designs provided by the agency may be utilized on projects at the Engineer's discretion. The Engineer will review and approve the mix design to assure it contains all of the required information as outlined in Section 710.3.1. If WMA technologies are used within the mix design, the type of WMA technology used shall be indicated on the mix design. The target values for gradations, binder contents, and air voids will be established as the accepted Job Mix Formula (JMF) based upon the mix design. Mix designs not containing all of the information will be returned within five working days of receipt of all mix design information, for action and resubmission by the contractor.

Once the mix design has been approved by the agency and the mixing plant selected, the Contractor and/or his supplier shall not change plants nor utilize additional mixing plants without prior approval of the Engineer.

If the contractor elects to change its source of material, the contractor shall furnish the Engineer with a new mix design, which meets the requirements of Section 710, as amended by the Project Specifications.

The contractor may make self-directed target changes to the approved mix design within the limits shown below. Requests for self-directed target changes shall be made in writing, acknowledged by the Engineer prior to the start of production of a lot, and will remain in effect until such time as any additional changes are implemented. The self-directed target changes must meet the contract requirements for mix design criteria and gradation limits.

TABLE 321-1 ALLOWABLE SELF-DIRECTED TARGET CHANGES	
MEASURED CHARACTERISTICS	ALLOWABLE SELF-DIRECTED TARGET CHANGES
Gradation (Sieve Size)	
3/8 inch	± 4% from mix design target value
No 8	± 4% from mix design target value
No 40	± 2% from mix design target value
No 200	+ 0.5% from mix design target value
Binder Content	± 0.2% from mix design target value
Effective Air Voids	None

The contractor may propose target changes, other than self-directed changes, to the approved mix design for the approval of the Engineer. The Engineer will determine if the proposed target change will result in mix production that meets the contract requirements for mix design criteria and gradation limits. The target changes will not be retroactive for the purpose of acceptance.

321.6 MIX PRODUCTION:

All materials shall be proportioned by weight in a hot mix asphalt plant in the proportions required by the mix design to provide a homogeneous and workable mass. Each hot mix asphalt plant shall be inspected in accordance with the provisions contained in the 'Hot Mix Asphalt Production Facilities' by the Arizona Rock Products Association and shall have a current inspection certificate. All measuring devices shall be calibrated at least annually by a technician licensed by the Arizona Bureau of Weights & Measures. Mixing plants shall conform to the requirements of AASHTO M-156, except as modified herein. If WMA technology is being used, any equipment associated with the production of hot mix asphalt shall be calibrated and in proper working order according to the WMA equipment specifications. If there are any deviations in the production or compacting temperatures of the hot mix asphalt with WMA technology, the mix design shall state the differences.

In drum mix plants, the mineral admixture shall be added and thoroughly mixed with the mineral aggregate by means of a mechanical mixing device prior to the mineral aggregate and mineral admixture entering the dryer. The moisture content of the combined mineral aggregate shall be a minimum of three percent by weight of the aggregate during the mixing process.

For drum-mix plants, the mineral admixture shall be weighed across a weight belt, or other approved alternative weighing system, with a weight totalizer prior to entry into the mechanical mixing device. The mechanical mixing device shall be a pug mill type mixer that is in good working condition. The rate of the aggregate feed shall not exceed the mixing device's capacity in ton per hour. The mixer shall be constructed to minimize the loss of mineral admixture and shall be located in the aggregate delivery system at a location where the mixed material can be readily inspected. The mixing device shall be capable of effective mixing in the full range of the asphalt concrete production rates.

The hot plant and equipment shall be constructed and operated to prevent loss of mineral admixture through the dust collection system of the plant.

A positive signal system shall be provided and used during production whereby the mixing shall automatically be stopped if the mineral admixture is not introduced into the mineral aggregate. The plant will not be permitted to operate unless the signal system is in good working condition.

The introduction of bituminous material shall be controlled by an automated system fully integrated with the controls or the mineral aggregate and mineral admixture. The production of the plant shall be controlled by the rate required to obtain a uniform mixture of all components. Drying and heating shall be accomplished in such a manner as to preclude the mineral admixture from becoming coated with un-spent fuel.

The completed asphalt concrete may be held in storage for up to 12 hours in insulated or heated silos, providing the minimum temperature noted herein for placement and compaction is met behind the placement device. If the Engineer determines that there is an excessive amount of heat, heat loss, drain down, segregation and/or oxidation of the mixture due to temporary storage, use of surge bins or storage bins will be discontinued.

The temperature of the asphalt concrete, with unmodified binders, upon discharge from the mixer shall not exceed 335 degrees F. The discharge temperature may be increased on the recommendation of the binder supplier, when approved by the Engineer. If the asphalt concrete is discharged from the mixer into a hopper, the hopper shall be constructed so that segregation of the asphalt concrete will be minimized.

321.7 TRANSPORTATION:

Petroleum distillates or other substances that will have a detrimental effect on the asphalt concrete shall not be used as a release agent.

The beds of all transportation units shall be clean and smooth to allow the free flow of material into the paving machine's hopper.

Tarpaulins shall be furnished on all trucks and used when weather condition warrant, or if directed by the Engineer.

321.8 PLACEMENT:

Placement of asphalt concrete pavement shall not commence until authorized by the Engineer. The Engineer's authorization to allow commencement of asphalt concrete paving will generally require all newly constructed valley gutters, curbing, and curb and gutters which new pavement is to be placed against to be in-place and in an acceptable condition. While it is preferred to have all newly constructed concrete items against which new pavement is to be placed be in an acceptable condition, the Engineer may allow paving to commence based on weather, the amount of defective concrete, or other considerations.

321.8.1 Placing: All courses of asphalt concrete shall be placed and finished by means of a self-propelled paving machine equipped with an automatically actuated control system, except under certain conditions or at locations where the Engineer deems the use of a self-propelled paving machine impracticable.

The control system shall control the elevation of the screed at each end by controlling the elevation of one end directly and the other end indirectly either through controlling the transverse slope or alternatively when directed, by controlling the elevation of each end independently.

The control system shall be capable of working with one of the following devices:

(a) Ski or non-contact device of not less than 30 feet in length, supported throughout its entire length
(b) Taut stringline or wire set to grade
(c) Short ski or sonar sensing units from curb control
(d) Joint matching shoe

Failure of the control system to function properly shall be cause for the suspension of asphalt concrete production. In order to achieve a continuous operation, the speed of the paving machine shall be coordinated with the hot mix plant and transport units.

If the asphalt concrete is dumped from the hauling vehicles directly into the paving machine, care shall be taken to avoid jarring the machine or moving it out of alignment. No vertical load shall be exerted on the paving machine by the truck.

If asphalt concrete is dumped upon the surface being paved and subsequently loaded in the paving machine, the loading equipment shall be self-supporting and shall not exert any vertical load on the paving machine. Substantially all of the asphalt concrete shall be picked up and loaded into the paving machine.

Self-propelled paving machines shall spread the mixture without segregation or tearing, true to line, grade and crown indicated on the project plans. Pavers shall be equipped with hoppers and augers that will distribute the mixture uniformly in front of an adjustable floating screed. The raising of the hopper wings must be minimized and the paving machine will not be operated when in an empty condition.

Screeds shall include any strike-off device operated by tamping or vibrating action which is effective, without tearing, shoving or gouging the mixture and which produces a course with a uniform texture and density for the full width being paved. Screeds shall be adjustable as to height and crown and shall be equipped with a controlled heating device for use when required. In the

case of the screed, auger extensions and vibrators shall be installed wherever the screed is extended more than one (1) foot beyond the end of the base auger or auger extension. However, when placing material against an extremely uneven curb or edge over a short distance, the Engineer may waive the auger extensions and vibrators.

At any place not accessible to the roller, the mixture shall be thoroughly compacted with tampers to provide a uniform and smooth layer over the entire area compacted in this manner.

321.8.2 Joints: Transverse joints, before a surface course is placed in contact with a cold transverse construction joint, the cold existing asphalt concrete shall be trimmed to a vertical face for its full depth exposing a fresh face. The fresh face shall be tack coated prior to placement of the new asphalt concrete. After placement and finishing the new asphalt concrete, both sides of the joint shall be dense and the joint shall be smooth and tight. The surface in the area of the joint shall not deviate more than 1/4 inch from a 12-foot straightedge, when tested with the straightedge placed across the joint, parallel to the centerline.

Longitudinal joints of each asphalt course shall be staggered a minimum of 6 inches with relation to the longitudinal joint of the immediate underlying course's cold longitudinal construction joint.

Longitudinal joints with existing or cold (more than 32 hours old) asphalt concrete shall require the existing pavement to be trimmed to a vertical face for its full depth exposing a fresh face. The fresh face shall be tacked prior to placement of the adjacent course. Longitudinal joints with an existing asphalt pavement that is less than 32 hours old that has had its edge protected from damage may have adjacent new asphalt concrete placed after applying the required tack coat. After placement and finishing of longitudinal joints, both sides of the joint shall be dense and the joint shall be smooth and tight. The surface in the area of the joint shall not deviate more than 1/4 inch from a 12-foot straightedge, when tested with the straightedge placed across the joint, in any direction.

321.8.3 Asphalt Leveling Course: A leveling course shall be used when specified, or as directed in writing by the Engineer, to bring existing pavement to a uniform grade prior to placing an overlay or other course. If a leveling course is being applied on an asphalt surface, a tack coat shall be applied. The compaction requirements contained in Section 321.10 do not apply to leveling courses.

321.8.4 Compaction - Asphalt Base Course and Surface Course: It is the contractor's responsibility to perform Quality Control monitoring and/or testing during compaction operations to achieve the required compaction. The temperature of the asphalt concrete immediately behind the laydown machine shall be at least 265 degrees F, unless WMA technology is being used. If WMA technology is being used then the minimum requirements will be stated within the mix design recommended by the WMA manufacturer. A probe type electronic thermometer with a current calibration sticker attached will be used to measure the temperature of the asphalt concrete mixture. When measuring the temperature of the mat, the probe shall be inserted at mid-depth and as horizontal as possible to the mat. The contractor is responsible to achieve the required compaction.

Asphalt compaction equipment shall be of sufficient size and weight to accomplish the required compaction. All compaction equipment shall be operated and maintained in accordance with the manufacturer's recommendations and the project requirements. During the rolling operation, the speed of the roller shall not exceed three miles per hour, unless otherwise approved by the Engineer.

Pneumatic tired compactors shall be equipped with skirt-type devices mounted around the tires so that the temperature of the tires will be maintained during the compaction process.

The Engineer will determine the acceptability of the pavement compaction in accordance with Section 321.10.

321.8.5 Smoothness: The completed surfacing shall be thoroughly compacted, smooth and true to grade and cross-section and free from ruts, humps, depressions or irregularities. An acceptable surface shall not vary more than 1/4 inch from the lower edge of a 12-foot straightedge when the straightedge is placed parallel to the centerline of the roadway.

321.8.6 Asphalt Concrete Overlay: Asphalt concrete overlay consists of the placing and compacting plant mix asphalt concrete over existing pavement. The mix design and thickness of the overlay shall be as shown on the plans or as specified in the special provisions.

Except when the existing asphalt surface is to be preheated and remixed, pavement surfaces shall be prepared as follows:

(A) Areas designated for pavement repair by the contract documents (which may include severely raveled areas, severely cracked areas, over-asphalted areas, and other defects) shall be cut out and replaced. Pavement repairs shall be completed and approved before placing asphalt concrete overlay.

(B) Before placing asphalt concrete overlay, raised pavement markers shall be removed, and milling shall be completed. Milling shall be as shown on the plans or specified in the special provisions and shall be in accordance with Section 317.

(C) After pavement repairs and milling have been completed, the entire surface shall be cleaned with a power broom.

(D) After surfaces have been prepared to the satisfaction of the Engineer, they shall receive a tack coat per Section 321.4. Traffic will not be permitted to travel over surfaces that have received a tack coat, except when tack coat is applied to milled surfaces in compliance with Section 317.2 for dust control purposes. When the overlay is to extend onto a concrete surface, the concrete surface shall be thoroughly cleaned of loose dust and cement particles and shall be tack coated.

Asphalt concrete overlay shall be placed as specified in Section 321.8.1 and compacted as specified in Section 321.8.4. The surface smoothness shall meet the tolerances specified in Section 321.8.5.

Frames and covers of manholes, survey monuments, valve boxes, clean-outs and other existing structures shall be adjusted in accordance with Section 345 to set flush with the finished surface of the new pavement. During adjustment, if pavement or base materials are removed or disturbed, they shall be replaced with approved materials installed in a manner acceptable to the Engineer.

On roads without curb and gutter, the existing unpaved shoulder elevation shall be adjusted by the Contractor to match the elevation at the edge of the new overlay and slope away from the new pavement surface at a rate that the existing quantity of shoulder material will allow. Shoulder material shall be compacted to a minimum of 95% of maximum density, determined in accordance with Section 301.3. Shoulder adjustment to match the new pavement surface elevation shall not be measured. The cost of shoulder adjustment shall be included in the price paid for the asphalt concrete overlay or other related pay items. When the Engineer determines an insufficient amount of material is available for shoulder adjustment, the Engineer may require the Contractor to provide additional material. Acceptable material for shoulders includes the existing shoulder material, millings, untreated base materials, or a granular material approved by the Engineer. Engineer requested imported material for shoulder adjustment is not included in the price paid for the asphalt concrete overlay.

321.8.7 Pavement Fabric Interlayer: Pavement fabric interlayer shall be used only when specified on the plans or in the specifications. Pavement fabric interlayer shall be in accordance with Table 796-1 and be the class designated on the plans or in the specifications.

Asphalt binder coat used to bond the fabric to the pavement shall be paving asphalt PG 70-10 asphalt cement conforming to the requirements of Section 711. The application and distributing equipment for the asphalt binder shall conform to the requirements of Section 330. The asphalt binder coat shall be uniformly spray applied to the prepared pavement surface at the rate of 0.20 gallons per square yard for Class B fabric or at the rate of 0.25 gallons per square yard for Class A fabric. Some underlying surfaces may require a higher or lower application rate. A test strip may be necessary to determine the proper application rate. The width of liquid asphalt cement application shall be the fabric width, plus six inches.

Neither the asphalt binder coat or fabric interlayer shall be placed when weather conditions, in the opinion of the Engineer, are not suitable. The asphalt binder and fabric interlayer shall only be placed when the pavement is dry, the ambient air temperature is 50 degrees F and rising, and pavement temperature is 40 degrees F and rising.

Equipment for placing the fabric shall be mechanized and capable of handling full rolls of fabric. The equipment shall be able to lay the fabric smoothly to maximize pavement contact and remove air bubbles. Stiff bristle brooms shall be used to smooth the fabric. The equipment used to place the fabric shall be in good working order and is subject to approval by the Engineer.

Pavement fabric interlayer shall not be placed if the in-place binder is hotter than 325 degrees F or has cooled to 180 degrees F or below (as determined by non-contact thermometer).

Pavement fabric interlayer shall be placed onto the asphaltic binder with the heat-bonded side up with a minimum amount of wrinkling or folding. Remaining wrinkles or folds 1-inch and larger shall be removed or slit and shingle-lapped in the direction of paving. Burning or torching of wrinkles is not allowed. Fabric shall overlap three to six inches to insure full closure of the joint. Transverse joints shall be shingle-lapped in the direction of paving to prevent edge pickup by the paver. A second application of hand-placed asphalt binder may be required at laps and repairs as determined by the Engineer to ensure proper binding of the narrow double fabric layer.

All areas where fabric has been placed shall be paved with asphaltic concrete during the same work shift. Placement of the asphaltic concrete shall closely follow fabric lay down. The temperature of the asphaltic concrete immediately behind the laydown machine shall not exceed 325 degrees F, unless modified by the WMA technology being used. If WMA technology is being used then the minimum requirements will be stated within the mix design recommended by the WMA manufacturer. In the event that the asphalt binder coat bleeds through the fabric causing construction problems before the overlay is placed, the affected areas shall be sanded with a sand blotter in compliance with Section 333. Excess sand shall be removed before beginning the paving operation. In the event of rainfall prior to the placement of the asphaltic concrete, the fabric shall be allowed to dry before the asphalt concrete is placed.

Turning of the paving machine or of other vehicles on the fabric shall be gradual and kept to a minimum to avoid damage to the fabric. Should equipment tires stick to the fabric during pavement operations, small quantities of paving asphalt concrete shall be broadcast on the fabric to prevent pick-up. Decrease of binder rate in order to minimize pick-up on tires is not allowed.

321.8.8 Thickened Edge: When the depth of the thickened edge extends four inches or more below the bottom of the asphalt pavement, the portion of the thickened edge extending below the asphalt pavement shall be placed and compacted prior to placement of the asphalt pavement. Placement of tack coat on the surface of the compacted thickened edge asphalt may be omitted when additional asphalt pavement is placed on the same day and the Engineer agrees that the surface of the thickened edge asphalt has remained clean.

When the depth of the thickened edge extends less than four inches below the bottom of the asphalt pavement, the portion below the asphalt pavement may be placed and compacted with the asphalt pavement in a single operation.

321.8.9 Safety Edge: The finished safety edge slope shall be planar forming a 30° ± 5° angle with the adjacent roadway surface and extend a minimum of five inches (5”) below the roadway pavement’s finished surface.

The safety edge shall be constructed with the top or final paving lift of a new pavement or overlay using a device that is mounted to or is a part of the screed portion of the laydown machine. The safety edge device shall be capable of constraining the asphalt concrete material to increase density of the extruded profile by reducing the volume. A conventional single strike-off plate is not acceptable. Compaction obtained from the extruded safety edge shall be acceptable when the extruded shape conforms to the specified shape.

During laydown operations if the extruded safety edge does not conform to the specified shape, the Contractor shall take immediate actions to correct the deficiency and to repair all non-compliant sections of safety edge. The Contractor shall stop paving operations until corrections to the laydown operation have been made and resumption of paving is approved by the Engineer or his designated representative.

321.8.10 Protection for Asphalt Base Course: Arterial roadway traffic shall not be allowed on a new asphalt base course that is less than five (5) inches in thickness without the written consent of the Engineer.

321.9 QUALITY CONTROL:

It is the contractor’s responsibility to perform Quality Control monitoring and/or testing during asphalt concrete production to achieve the required compaction and to perform Quality Control monitoring and/or testing during asphalt concrete production to achieve the required mix properties. The Engineer may obtain samples of any portion of any material at any point of the operations for his own use. Also, the Engineer may order the use of any drying, proportioning and mixing equipment or the handling of any material discontinued which, in his/her opinion, fails to produce a satisfactory mixture.

The asphalt concrete produced shall conform to the requirements of the production tolerances established in Section 321.10.

When the asphalt concrete does not conform to the production tolerances, it shall be reported to the Engineer, and corrective quality control measures shall be implemented, or production shall cease immediately at no additional cost to the contracting Agency.

Requests for referee testing as described in Section 321.11 will only be considered based on quality control test results performed by a laboratory accredited by the AASHTO Accreditation Program (AAP) for the tests being performed or a laboratory listed in the current ADOT Directory of Approved Materials Testing Laboratories for the set of tests in question. The laboratory shall use properly certified technicians in accordance with ASTM D3666, Section 7 (Personnel Qualifications).

321.10 ACCEPTANCE:

321.10.1 Acceptance Criteria: Asphalt concrete will be divided into lots for the purpose of acceptance. A lot shall be one day's production. Each lot shall be divided into sublots of 500 ton or fraction thereof. Tests used to determine acceptance will be performed by a laboratory accredited by the AASHTO Accreditation Program (AAP) for the tests being performed. The contracting agency shall provide an appropriately accredited laboratory or laboratories to perform the acceptance testing. Laboratories shall use properly certified technicians in accordance with ASTM D3666, Section 7 (Personnel Qualifications). The acceptance laboratory will take representative samples of the asphalt concrete from each sublot to allow for testing of gradation, binder content, air voids, pavement thickness, and compaction of base and surface courses. Acceptance of each sublot will be based on the test data from the sample(s) from that sublot. All acceptance samples shall be taken using random locations or times designated by the Engineer in accordance with ASTM D3665.

For permit work, testing that does not strictly adhere to the sampling and testing methodology and requirements outlined in this section shall be disregarded and not considered in any acceptance determination. All required retesting shall be at the expense of the permittee.

321.10.2 Gradation, Binder Content and Air Voids: The acceptance laboratory will take a sample of the asphalt concrete in accordance with the requirements of Section 2 or 4 of Arizona Test Methods 104 or AASHTO T-168 from each sublot. The minimum weight of the sample shall be 45 pounds. Asphalt binder content and gradation shall be determined in accordance with AASHTO T-308 using the ignition furnace for each sublot. The acceptance laboratory is responsible for obtaining the necessary materials and performing an ignition furnace calibration as outlined in AASHTO T-308 for each asphalt concrete mixture utilized on the project. The correction factor used for each test shall be clearly indicated on the report. Reports that do not include the correction factor, performed as stated in the previous sentences, shall be considered invalid and not allowed to be used for acceptance. The bulk density for Marshall Mix designs shall be tested in accordance with AASHTO T-245. The bulk density for Gyratory mix designs shall be determined in accordance with AASHTO T-312. The maximum theoretical density shall be determined in accordance with the requirements of AASHTO T-209 including fan drying per AASHTO T-209 Section 15. Effective voids of the laboratory compacted specimens will be determined at a minimum of once per lot in accordance with the requirements of AASHTO T-269. Should the testing for effective air voids not meet the "Full Payment" or "No Corrective Action" requirements of Table 321-5, additional testing for laboratory air voids on the remaining sublots will be performed as necessary to determine the extent of the deficiency. Acceptance testing results will be furnished to the contractor and the supplier within five working days of receipt of samples by the acceptance laboratory.

During production, the allowable deviations from the mix design gradation targets are listed in the tables below. The allowable production tolerances may fall outside of the mix design gradation bands.

TABLE 321-3A
GRADATION ACCEPTANCE LIMITS FOR MARSHALL MIXES

Sieve Size	3/8 inch Mix	1/2 inch Mix	3/4 inch Mix	Base Mix
1 inch	—	—	—	±7%
3/4 inch	—	—	±7%	±6%
1/2 inch	—	±7%	—	—
3/8 inch	±7%	±6%	±6%	±6%
No. 8	±6%	±6%	±6%	±6%
No. 40	±4%	±4%	±4%	±4%
No. 200	±2%	±2%	±2%	±2%

TABLE 321-3B GRADATION ACCEPTANCE LIMITS FOR GYRATORY MIXES			
Sieve Size	3/8 inch Mix	1/2 inch Mix	3/4 inch Mix
3/4 inch	—	—	±7%
1/2 inch	—	±7%	±6%
3/8 inch	±7%	±6%	—
No. 8	±6%	±6%	±6%
No. 40	±4%	±4%	±4%
No. 200	±2%	±2%	±2%

If the results from a single acceptance sample fall outside of the acceptance limits in Table 321-3A or 321-3B as applicable, a second sample shall be taken and if the second acceptance sample is also outside of the acceptance limits the Contractor shall cease production of asphalt concrete. Production shall not begin again until calibration test results verify that adjustments made to materials or proportions yield a gradation that falls within acceptance limits in Table 321-3A or 321-3B as applicable.

If the asphalt binder content is within ± 0.40% of the mix design target value, the asphalt concrete will be paid for at the contract unit price. If the asphalt binder content deviates by more than ± 0.40% from the mix design target value, the deficient area will be evaluated within the sublot by coring one additional location at a maximum interval of 100 feet on each side of the deficient sample. The asphalt content of the original deficient sample will be averaged with the asphalt binder content of the two additional cores to determine compliance with the acceptance requirements. If the resulting average of the asphalt binder content deviates by more than ± 0.40% from the mix design target value, then Table 321-4 shall apply to the sublot. If approved by the Engineer, the Contractor may obtain additional cores to assist in formulation of an Engineering Analysis, but the additional cores shall not be used for re-evaluating acceptance.

TABLE 321-4 ASPHALT BINDER CONTENT ACCEPTANCE AND PENALTIES		
Deviation from that permitted	When the contracting agency is the owner: Payment Reduction ($ per ton of asphalt concrete)	When the contracting agency is not the owner (i.e. permits): Corrective Action
Over 0.2% above that permitted	Removal* or EA	Removal* or EA
Over 0.1% to 0.2% above that permitted	$6.00	EA
Over 0.0% to0.1% above that permitted	$2.00	EA
Within permitted range	Full Payment	No Corrective Action
Over 0.0% to0.1% below that permitted	$2.00	EA
Over 0.1% to 0.2% below that permitted	$6.00	EA
Over 0.2% below that permitted	Removal* or EA	Removal* or EA

NOTES: *The Contractor shall remove and replace the entire sublot that is deficient.
EA = Engineering Analysis per Section 321.10.6

If the laboratory air voids fall within a range of 2.8% to 6.2%, the asphalt concrete will be paid for at the contract unit price. If the laboratory air voids are outside of this range, the deficient area will be evaluated within the sublot by coring one additional location at a maximum interval of 100 feet on each side of the deficient sample. The laboratory air voids of the original deficient sample will be averaged with the laboratory air voids obtained from each of the two additional cores to determine compliance with the acceptance requirements. If the resulting average of the laboratory air voids is outside the indicated range, then Table 321-5 shall apply to the sublot. If approved by the Engineer, the Contractor may obtain additional cores to assist in formulation of an Engineering Analysis, but the additional cores shall not be used for re-evaluating acceptance.

TABLE 321-5 LABORATORY VOIDS ACCEPTANCE AND PENALTIES		
Laboratory Air Voids (Measured at N_{des} or 75 blows as applicable)	When the contracting agency is the owner: Payment Reduction ($ per ton of asphalt concrete)	When the contracting agency is not the owner (i.e. permits): Corrective Action
Less than 1.5%	Removal* or EA	Removal* or EA
1.5-2.0%	$5.00	EA
2.1-2.7%	$2.00	EA
2.8-6.2%	Full Payment	No Corrective Action
6.3-6.9%	$2.00	EA
7.0-8.0%	$5.00	EA
Greater than 8.0%	Removal* or EA	Removal* or EA

NOTES: *The Contractor shall remove and replace the entire sublot that is deficient.
EA = Engineering Analysis per Section 321.10.6

If an agency or Engineer is purchasing asphalt concrete directly from a commercial material supplier, the agency or Engineer will use Section 321.10, and specifically Tables 321-3A or 321-3B as applicable, 321-4 and 321-5 from Section 321.10, when determining the acceptance of the asphalt concrete with the material supplier.

321.10.3 Surface Testing: If directed by the Engineer, surface drainage test shall be performed. The completed surfacing shall be thoroughly compacted, smooth and true to grade and cross-section, and free from ruts, humps, depressions or irregularities. An acceptable surface shall not vary more than 1/4 inch from the lower edge of a 12-foot straightedge when the straightedge is placed parallel to the centerline of the roadway. The straightedge shall be furnished by the contractor and shall be acceptable to the Engineer.

All streets shall be water tested for drainage in the presence of the Engineer or designated representative before final acceptance. Any areas not draining properly shall be corrected to the Engineer's satisfaction at the Contractor's expense. Water for this testing shall be provided and paid for by the Contractor.

When deviations in excess of the above tolerance are found, humps or depressions shall be corrected to meet the specified tolerance. The defective pavement shall be cut out along neat straight lines or for multiple course pavements the surface course may be milled out, and the removed pavement replaced with fresh hot mixture and thoroughly compacted to conform with and bond to the surrounding area. Materials and work necessary to correct such deviations shall be at no additional cost to the Contracting Agency.

When pavement is cut out along neat straight lines, full depth longitudinal joints shall not be located within a lane wheel path or within forty-eight inches (48") of an asphalt pavement edge. Longitudinal joints shall comply with the restrictions for Type A Trench Repairs in Section 336.3.

321.10.4 Asphalt Pavement Thickness: Asphalt pavement thickness will be determined from cores secured from each lift of each sublot. Such cores will be taken and measured by the Asphalt Concrete Coring Method. This method can be found in Section 321.14. Each core location will be patched by the party responsible for the testing.

Acceptance or assessment of penalties for asphalt pavement thickness will be based on the combined total thickness of all asphalt concrete layers omitting all layers of asphalt-rubber asphalt concrete. If the final total pavement thickness exclusive of all ARAC layers is deficient from the target thickness by 0.25 inches or less, it will be paid for at the contract unit price.

If the thickness deficiency of the pavement core exceeds 0.25 inch, the thickness deficiency shall be evaluated by coring at a maximum interval of 100 feet on each side of the deficient core. The thickness of the original deficient core will be averaged with the thicknesses of the cores taken from each side of it to determine compliance with the acceptance requirements.

If the pavement thickness deficiency is greater than 0.25 inches and the contracting agency is not the owner (i.e. permits) the following will apply:

(1) If the pavement thickness deviates from the target thickness by more than 0.25 inch but not more than 0.50 inch, corrective action will be required. This corrective action shall consist of application of a Type II slurry seal coat in accordance to Section 715. The Contractor may present an Engineering Analysis outlining other proposed remedial measures for the consideration by the Engineer. The Engineer will review the Engineering Analysis and decide within 30 working days whether to accept the proposed remedial measures.

(2) If the pavement thickness deviates from the target thickness by more than 0.50 inch, corrective action will be required. The deficient area shall be overlaid with no less than a 1 inch thick lift, for the full width of the pavement to meet or exceed the designed thickness, with appropriate end and edge milling, with a mixture approved by the Engineer. The Contractor may present an Engineering Analysis outlining other proposed remedial measures for the Engineer's consideration. The Engineer will review the Engineering Analysis and decide within ten working days whether to accept the proposed remedial measures. If the Engineer chooses to reject the Engineering Analysis, the indicated overlay shall be constructed by the Contractor at no additional cost to the Owner.

If the contracting agency is the owner and the pavement thickness deficiency is greater than 0.25 inches but less than 0.50 inches, Table 321-6 will apply. If the pavement thickness deficiency is greater than 0.5 inches, the deficient area shall be overlaid with no less than a 1-inch thick lift for the full width of the pavement to meet or exceed the designed thickness using an asphalt mixture approved by the Engineer. The Contractor shall provide appropriate end and edge milling. The overlay and milling shall be accomplished by the Contractor at no additional cost to the contracting agency.

TABLE 321-6
ASPHALT PAVEMENT THICKNESS PAYMENT REDUCTION
For Thickness Deficiency of More Than 0.25 inches and less than 0.50 inches

Total Specified Asphalt Pavement Thickness exclusive of ARAC (if any)	Reduction in Payment Applied to asphalt concrete Except ARAC layers (if any)
Less than 1.5 inches	50%
1.50 inches to 1.99 inches	33%
2.00 inches to 2.49 inches	25%
2.50 inches to 2.99 inches	20%
3.00 inches and greater	17%

321.10.5 Density:

321.10.5.1 Pavement 1-1/2 Inches or Less in Nominal Thickness: Compaction shall consist of a "Rolling Method Procedure" using an established sequence of coverage with specified types of compactors. A pass shall be defined as one movement of a compactor in either direction. Coverage shall be the number of passes as are necessary to cover the entire width being paved.

The rolling sequence, the type of compactor to be used, and the number of coverages required shall be as shown in Table 321-7.

TABLE 321-7				
ROLLING SEQUENCE FOR LIFT THICKNESS 1½" OR LESS				
Rolling	**Type of Compactor**		**No. of Coverages**	
Sequence	**Option No. 1**	**Option No. 2**	**Option No. 1**	**Option No. 2**
Initial	Static Steel	Vibrating Steel	1	1
Intermediate	Pneumatic Tired	Vibrating Steel	4	2- 4*
Finish	Static Steel	Static Steel	1-3	1-3
* Based on the roller pattern which exhibits the best performance.				

The Contractor shall select the option for compaction and, when pneumatic-tired compactors are used will designate the tire pressure. Steel wheel compactors shall not be used in the vibratory mode for courses of one inch or less in thickness nor when the temperature of the asphaltic concrete falls below 180 degrees F. Initial and intermediate compaction shall be accomplished before the temperature of the asphaltic concrete falls below 200 degrees F.

Compaction will be deemed to be acceptable on the condition that the asphaltic concrete is compacted using the type of compactors specified, ballasted and operated as specified, and with the number of coverages of the compactors as specified.

321.10.5.2 Pavement Greater than 1-1/2 Inches in Nominal Thickness: Achieving the required compaction is the responsibility of the contractor. The number and types of rollers is the contractor's responsibility and shall be sufficient to meet these requirements.

In-place air voids shall be determined in accordance with AASHTO T-269 utilizing cores taken from the finished pavement. The maximum theoretical density used in the determination of in-place air voids will be the average value from the acceptance samples determined for the lot as outlined in 321.10.1.

The Engineer will designate one random test location for each sublot and the acceptance laboratory will obtain one core from that location. Regardless of sublot quantities or boundaries, a minimum of one core will be obtained per residential street and a minimum of one core per travel lane for collector and arterial streets. The outside one foot of each pass of the pavement course or any unconfined edge will be excluded from testing. The Engineer may exclude areas from the compaction lot that are not accessible by normal compaction equipment.

The Contractor shall provide the traffic control to facilitate any coring operations necessary for compaction acceptance.

Cores will be taken per the Asphalt Concrete Coring Method. This method can be found in Section 321.14. Acceptance testing results will be furnished to the contractor within five working days of receipt of samples by the acceptance laboratory.

If the pavement density has in-place voids of between 4.0% and 8.0%, the asphalt concrete will be paid for at the contract unit price. If the acceptance core for a sublot indicates that the pavement density has in-place voids of less than 4.0% or greater than 8.0%, the deficient area will be evaluated by coring two additional locations at maximum intervals of 100 feet from the deficient core. The in-place voids of the original deficient core will be averaged with the in-place voids of the cores taken from 100 feet on each side of it to determine compliance with the acceptance requirements. If the resulting average of the in-place voids is outside the indicated range, then Table 321-8 shall apply to the sublot. If approved by the Engineer, the Contractor may obtain additional cores to assist in formulation of an Engineering Analysis, but the additional cores shall not be used for re-evaluating acceptance.

TABLE 321-8		
PAVEMENT DENSITY PENALTIES		
Limits of In-place Air Voids for design lift thicknesses 1.5 inches and greater	When the contracting agency is the owner Payment Reduction ($ per ton of asphalt concrete)	When the contracting agency is not the owner i.e. permits Corrective Action
Below 3.0%	Removal* or EA	Removal* or EA
3.0% to below 4.0%	$10.00	EA and Type II Surry Seal
4.0% to 8.0%	Full Payment	No Corrective Action
Greater than 8.0% to less than 9.0%	$6.00	EA
9.0% to 10.0%	$10.00	EA and Type II Surry Seal
Greater than 10.0%	Removal* or EA	Removal* or EA

NOTES: *The Contractor shall remove and replace the entire sublot that is deficient.
EA = Engineering Analysis per Section 321.10.6

321.10.6 Engineering Analysis (EA): Within 10 working days after receiving notice that a lot or sublot of asphalt concrete is deficient and is found to fall within the "Removal or EA" band per Table(s) 321-4, 321-5, and/or 321-8, the contractor may submit a written proposal (Engineering Analysis) to accept the material in place at the applicable penalties along with possible remediation(s) listed in the "Removal or EA" category. Engineering Analysis can also be proposed for non-removal categories of "Corrective Actions" when the contracting agency is not the owner (i.e. permits).

The Engineering Analysis shall contain an analysis of the anticipated performance of the asphalt concrete if left in place. The Engineering Analysis shall also detail the effect of any proposed corrective action to the material(s) in place as it relates to the in-place material's performance. The Engineering Analysis shall be performed by a professional engineer experienced in asphalt concrete testing and mix designs.

If a lot or sublot is accepted for referee testing and the referee test results still show a deficiency, the contractor shall have ten working days to submit an Engineering Analysis beginning upon notification of referee test results.

When an Engineering Analysis recommends that a specific lot or sublot should not be removed, the Engineering Analysis will recommend that the following penalties (Table 321-9) be paid when the contracting agency is the owner, for the specific criteria being reviewed by the EA.

TABLE 321-9		
ENGINEERING ANALYSIS PENALTIES for REMOVAL* LOTS/SUBLOTS LEFT IN-PLACE		
Acceptance Criteria	**Acceptance Limits**	**Penalty When Contracting Agency is the Owner ($/Ton)**
Asphalt Binder Content	Over 0.2% points from that Permitted	$9.00
Laboratory Air Voids (Measured at N_{des} or 75 blows as applicable)	Less than 1.5% or Greater Than 8.0%	$7.50
Limits of In-place Air Voids	Less than 3% or Greater than 10.0%	$15.00

Within 15 working days, the Engineer will determine whether or not to accept the Contractor's proposed Engineering Analysis.

321.11 REFEREE:

If the Contractor has reason to question the validity of any of the acceptance test results, the Contractor may request that the Engineer consider referee test for final acceptance. Any request for referee testing must describe the contractor's reasons for questioning the validity of the original acceptance test results and must clearly describe which set of acceptance tests are in question. The Engineer may either accept or reject the request for referee testing. When referee testing is accepted the Contractor (at the Contractors own expense) will engage an independent laboratory accredited by the AAP or a laboratory listed in the current ADOT Directory of Approved Materials Testing Laboratories as appropriate the acceptance tests that are being questioned. The independent referee laboratory shall use properly certified technicians in accordance with ASTM D3666, Section 7 (Personnel Qualifications). For the set of test results in question, the referee laboratory shall perform a new set of acceptance tests (as required by Section 321.10 representing the area for the set of tests in question). The referee tests will replace the original acceptance tests that were in question.

For permit work, the permittee, whose results necessitate referee testing, shall bear all expenses in the additional testing (i.e., secondary and the referee testing) if the original results are not substantiated by the referee testing procedure outlined in this section. Additionally, any testing performed that does not strictly adhere to the sampling and testing methodology and requirements in Section 321.10 shall be disregarded and not allowed in any acceptance determination. Disregarded tests will be re-performed at the expense of the permittee.

These tests may include asphalt binder content, aggregate gradation, Marshall or Gyratory unit weight, maximum theoretical unit weight, laboratory air voids and in-place air voids (compaction). All referee testing shall conform to Section 321.10. Samples for referee testing shall come from representative samples obtained from the completed pavement, as directed by the Engineer.

The number of samples taken will be the same as specified in Section 321.10. The independent laboratory shall compile the test results and transmit them to both the Engineer and the contractor. The independent laboratory shall include a report sealed and signed by an Engineer registered in the State of Arizona, who is experienced in asphalt concrete testing and mix design development. The signed report shall give an opinion that the material evaluated does or does not comply with project specifications, shall clearly describe any deficiencies, and the results will be binding between all parties.

321.12 MEASUREMENT:

Asphalt concrete pavement will be measured by the ton, or by the square yard, for the mixture actually used as allowed above, which shall include the required quantities of mineral aggregates, asphalt binder, and mineral admixture. Measurement shall include any tonnage used to construct intersections, roadways, streets, or other miscellaneous surfaces indicated on the plans or as directed by the Engineer.

Measurement for safety edge preparation only applies to overlays of existing pavements that require the construction of a safety edge when none exists. Safety edge preparation will be measured by the linear foot. Safety edge preparation will not be measured when a safety edge is part of new pavement construction, pavement widening, or when overlaying an existing pavement that contains a safety edge. The asphalt concrete pavement measurement shall include the tonnage used to construct safety edges or the square yard measurement for asphalt concrete pavement will be increased by the horizontal extension of the safety edge beyond the roadway pavement edge.

321.13 PAYMENT:

The asphalt concrete measured as provided above will be paid for at the contract price per ton or square yard, as adjusted per Section 321.10, which price shall be full compensation for the item complete, as herein described and specified.

Payment for tack coat will be by the ton diluted, based on the rate of application, as directed by the Engineer.

No payment will be made for any overrun in quantity of asphalt concrete in excess of 10 percent for newly constructed pavement having a total thickness equal to or greater than 2.5 inches. The overrun quantity is excess tonnage above the tonnage calculated based on actual field measurement of area covered, design thickness, and the mix design unit weight. The calculations for overrun will be by individual pay item. To compensate or adjust for a thickness deficiency in an underlying asphalt concrete

course, the Engineer may authorize a quantity increase in excess of 10 percent for a subsequent asphalt concrete course. In such cases, the quantity in excess of 10 percent will be paid for at the lowest unit price.

Removal of raised pavement markers, pavement repairs, and surface pavement replacements required prior to roadway overlay operations will be paid for by other pay items unless otherwise specified.

Except as otherwise specified, no separate payment will be made for work necessary to construct thickened edges, safety edges, or other miscellaneous items or surfaces of asphalt concrete.

Payment for safety edge preparation will be at the contract unit price for the quantities measured as described above.

321.14 ASPHALT CORE METHOD: Core Drilling of Hot Mix Asphalt (HMA) for Specimens of 4" or 6" diameter

321.14.1 Scope: This method is to establish a consistent method of the use of a diamond bit core to recover specimens of 4 or 6 inch diameter for laboratory analysis and testing. The method will require the use of: water, ice (bagged or other suitable type), dry ice, and a water-soap solution to be utilized when coring asphalt rubber concrete. Individuals doing the specimen recovery should be observing all safety regulations from the equipment manufacturer as well as the required job site safety requirements for actions, and required personal protective equipment.

For permit work, testing of cores obtained in a manner that does not strictly adhere to the methodology outlined in this section shall be disregarded and not considered in any acceptance determination. Retesting shall be at the expense of the permittee.

321.14.2 Core Drilling Device: The core drilling device will be powered by an electrical motor, or by an acceptable gasoline engine. Either device used shall be capable of applying enough effective rotational velocity to secure a drilled specimen. The specimen shall be cored perpendicularly to the surface of pavement, and that the sides of the core are cut in a manner to minimize sample distortion or damage. The machinery utilized for the procedure shall be on a mounted base, have a geared column and carriage that will permit the application of variable pressure to the core head and carriage throughout the entire drilling operation. The carriage and column apparatus shall be securely attached to the base of the apparatus; and the base will be secured with a mechanical fastener or held in place by the body weight of the operator. The core drilling apparatus shall be equipped with a water spindle to allow water to be introduced inside of the drill stem while operating. The cutting edge of the core drill bit shall be of hardened steel or other suitable material with embedded diamond chips in the cutting surface. The core barrel shall be of sufficient diameter to secure a specimen that is a minimum of four or six inches or whichever is prescribed for necessary testing. The core barrel shall not be missing more than one of the teeth used for cutting; if so, it shall be discarded and another barrel shall be used. The core barrel shall also be a minimum of two inches longer than the anticipated depth of pavement in accordance with project paving plans.

321.14.3 Accessory Equipment: A sufficient supply of ice and dry ice shall be provided to sufficiently cool the pavement prior to securing the samples from the designated areas in the pavement. The ice should also be used to adjust the temperature of the water used to cool the core bit. A water supply (usually a plastic 35 – 55 gallon drum) with sufficient hose to introduce the water into and through the spindle of the coring device by gravity feed. The drum should be white or light in color to minimize excessive thermal heating of the water (*for coring of asphalt rubber cores see Note 1*). At no time shall the water utilized in the coring operation exceed 65 degrees F during the coring operation. Ice shall be utilized to ensure the temperature control of the water being introduced during the cutting operation. An ice chest or other suitably insulated container that can maintain a temperature of less than 70 degrees F shall be used to secure the specimens during transport. The container will be equipped with flat shelving that will support the drilled cores throughout the entire specimen dimension during transport back to the testing facility.

Miscellaneous hand tools to remove the drilled specimen from the drill hole or the core barrel taking great care in not disturbing the specimen more than necessary (refer to fig. 1 in ASTM D5361).

321.14.4 Process: The pavement surface at the time of coring shall not exceed a temperature of 90 degrees F; the pavement shall be conditioned with ice or dry ice to ensure that this requirement is met. Immediately after it has been ensured that the pavement has dropped to the required temperature, core drilling shall begin. The operator will then apply an even and continuous pressure (Note 2) to penetrate through the full depth of the pavement. The operator will concurrently ensure that enough water is moving over the core surface as to adequately remove any and all cuttings that could damage the drilled core.

After the pavement thickness has been penetrated, the core shall be carefully removed from either the drill hole or the core barrel and be immediately transferred to an ice chest or other suitable container. Each individual core shall be placed on a shelf in the cooler with the exposed side of the specimen facing down, or the "top side" down. If the specimen is a two-lift core, the only acceptable means of separating lifts is with a power or other acceptable wet saw type of equipment (conforming to ASTM D5361); however, at no time shall cores be split using a mallet and screwdriver or metal straight edge when being tested for bulk density. Perpendicularity of the specimen shall be checked in the field after the specimen has been extracted from the surface. The core operator shall hold the core up to eye level and place the core top side down in a "speed square" or small carpenters square. The specimen placed in the square shall not depart from perpendicular to the axis more than 0.5º (approximately equivalent to 1/16 of an inch in 6 inches). If the specimen is outside of this distance from square, it shall be discarded in the field and another sample cored that falls within tolerance. The cores upon arriving at the laboratory for testing shall be carefully cleaned and measured for thickness in accordance with ASTM D3549. A speed square shall be used to measure perpendicularity as compared to a 90 degrees angle and shall not depart from perpendicular to the axis more than 0.5 degrees (approximately equivalent to 1/16 of an inch in 6 inches). All remaining testing shall be done within the parameters of the current project and/or agency required specification.

The core operator that obtained the cores is responsible for restoration of the core holes at the conclusion of the coring process. Immediately before restoration, standing water and errant debris shall be removed from the holes. Core holes shall be patched back with an agency-approved material. One typical material is hot mix asphalt conforming to Section 710, compacted in thin (1.5 inch) lifts with the temperature compaction range as specified on the mix design, or as established by the binder supplier. Another typical material is pre-packaged non-shrink grout conforming to ASTM C1107. If non-shrink grout is used, the individual restoring the core holes is responsible for protecting the finished work from tire traffic, etc. Other patch materials maybe used at the discretion of the Engineer.

- End of Section -

*Note 1 – It should be noted that when the material to be cored is a rubberized asphalt mixture a wetting agent such as liquid dish soap be added to the water barrel to hinder the material from sticking or allowing the binder to spread during coring.
*Note 2 – This refers to pressure exerted on the core barrel and machine during the coring process. Too much pressure can cause damage to the core barrel and the motor; and too little pressure can cause a glazing of the diamonds, reducing cutting efficiency and premature wear of the barrel.

SECTION 324

PORTLAND CEMENT CONCRETE PAVEMENT (PCCP)

324.1 DESCRIPTION:

This item shall consist of construction of a pavement composed of plain jointed Portland cement concrete on a prepared subgrade. The Contractor shall furnish all labor, materials and equipment necessary for the construction of the pavement in accordance with these specifications and in reasonably close conformity to the lines, grades, thicknesses and details indicated by the plans or as established by the Engineer. All tests shall be performed by a laboratory approved by the Engineer.

324.2 MATERIALS:

324.2.1 Portland Cement Concrete: Portland cement concrete shall conform to the applicable requirements of Section 725 and the additional requirements of this section.

Concrete shall comply with Table 725-1 for Class AA, 4000 psi unless otherwise specified by the Engineer.

The maximum concrete slump shall be as determined by the approved mix design in accordance with Section 725.9(A)(1).

324.2.2 Reinforcement: Tie bars shall be deformed billet steel reinforcing bars conforming to the requirements of ASTM A615, Grade 40.

Dowel or load transfer bars shall conform to the requirements of ASTM A615, Grade 40. An approved support system shall be used to hold bars in position.

324.2.3 Curing Materials: Materials for curing concrete shall conform to the requirements of Section 726.

324.2.4 Joint Materials: Joint sealant shall be poured type, conforming to the requirements of Section 729.2 or as approved by the Engineer. Preformed expansion joint filler shall conform to the requirements Section 729.1 or as approved by the Engineer.

324.3 CONSTRUCTION METHODS:

324.3.1 General: Pavement shall be constructed with mechanical equipment utilizing stationary side forms or by the use of slipform paving equipment without stationary side forms. Manual methods of placing and finishing concrete with stationary side forms may be permitted by the Engineer for areas inaccessible for mechanical equipment.

All curb and gutter shall have the same class of concrete as the adjacent PCCP. Gutter sections shall have the same thickness as the PCCP section. All curbs or combined curb and gutter joints shall align with roadway joints.

324.3.2 Equipment: Design, capacity, and mechanical condition of equipment and tools necessary for handling materials and performing all parts of the work shall be approved by the Engineer. Equipment shall be at the jobsite sufficiently ahead of the start of concrete paving operations to permit thorough examination and approval by the Engineer prior to start of concrete paving.

Equipment used to place concrete may consist of one or more machines, shall be capable of uniformly distributing and consolidating the concrete as it is placed without segregation and shall be capable of producing concrete pavement, which will conform to the required cross-section with a minimum of hand work. The number and capacity of machines furnished shall be adequate to perform the work required at a rate equal to the concrete delivery rate.

Vibrators shall be used to consolidate concrete; the rate of vibration shall be not less than 3,500 cycles per minute for surface vibrators and not less than 8,000 cycles per minute for internal vibrators. Power to vibrators mounted on mechanical equipment shall be so connected that vibration ceases when forward or backward motion of the machine is stopped. Contractor shall furnish a tachometer or other suitable device for measuring and indicating the frequency of vibration.

Slipform pavers shall be equipped with high frequency internal vibrators mounted with axes either parallel or normal to pavement alignment for the full paving width. Vibrators mounted with axes parallel with pavement alignment shall be spaced at intervals not to exceed 24 inches, measured center-to-center. Vibrators mounted with axes normal to pavement alignment shall be spaced so that lateral clearance between individual vibrating units does not exceed 6 inches.

Slipform paving equipment which will be wholly or partially supported on subgrade shall be equipped with traveling side forms of sufficient dimensions, shape and strength to support the concrete at free edges laterally for a sufficient length of time during placement to produce pavement of the required cross-section, and shall be equipped and operate with automatic sensing and control devices such that the machine automatically senses deviations from the established guideline and performs the necessary corrective maneuvers to overcome variations from correct grade and alignment.

When concrete will be placed adjacent to existing pavement or curb and gutter, that part of the equipment supported on the existing pavement or curb and gutter shall be equipped with protective pads on crawler tracks or rubber-tired wheels with bearing surfaces offset a sufficient distance from the edge of the pavement or curb and gutter to avoid edge damage, or the surface of the existing pavement or curb and gutter shall be otherwise protected against such damage in a manner approved by the Engineer.

324.3.3 Subgrade and Base Preparation: Subgrade and base shall conform to the applicable compaction requirements of Section 601 and elevation tolerances specified for the material involved, shall be kept smooth and compacted, and shall be free of all loose and extraneous material when concrete is placed.

The surface of the subgrade shall be uniformly moist when concrete is placed. The surface of the subgrade shall be moistened immediately prior to placement of concrete, if necessary to produce a uniformly moist condition. Any excess water standing in pools or flowing on the surface shall be removed prior to placing concrete.

324.3.4 Stationary Side Forms and Setting of Forms: Side form sections shall be straight, free from warps, bends, indentations or other defects. Side forms shall be of metal, have a base width of at least four inches and a minimum depth equal to the thickness of the pavement. No section shall show a variation from a true plane greater than 1/8 inch in ten feet on the top of the form or more than 1/4 inch in ten feet on the inside face. Flexible or curved forms of proper radius shall be used for curves of 100 feet radius or less. Suitable materials other than metal may be used to form end closures or at other locations where use of metal forms is not practical. Forms shall be thoroughly cleaned and oiled each time they are used.

Forms shall be of such cross-section and strength and so secured and supported on the subgrade as to resist the pressure of the concrete when placed and the impact and vibration of any equipment they are to support without springing or settlement. The method of connection between sections shall be such that the joints shall not move in any direction.

Subgrade under forms shall be compacted and cut to grade so that the form when set will be uniformly supported for its entire length at the specified elevation. Forms shall be so supported and secured during the entire operation of placing and finishing that they will not deviate vertically at any point more than 1/8 inch from the proper elevation. Forms shall be set to the required lines and grades well in advance and for a distance sufficient to prevent delay in placing concrete, and shall be approved by the Engineer prior to placing concrete. When any form has been disturbed or any grade has become unstable, the form shall be reset and rechecked.

Side forms shall remain in place until the day after placing concrete, and in all cases until the edge of the pavement no longer requires the protection of the forms. Forms shall be carefully removed in such a manner as to avoid damage to the pavement. Use of pry bars between the pavement and the forms will not be permitted.

324.3.5 Placing, Spreading and Compacting: Construction equipment shall not operate on the subgrade in the paving lane when conditions of the job will permit operation from outside the lane. When job conditions make it necessary to operate equipment on the subgrade in the paving lane, suitable runways or other precautions shall be taken to prevent rutting or displacement of subgrade material. The grade shall be checked and corrected immediately ahead of concrete placement and all disturbed grade shall be properly recompacted. Except when otherwise approved by the Engineer, concrete shall be deposited on the subgrade and spread full width using mechanical methods that result in minimal handling and segregation.

Necessary hand spreading shall be done with shovels, not rakes. Placement shall be continuous between transverse joints without the use of intermediate bulkheads.

The Contractor shall make adequate advance arrangements for preventing delay in delivery and placing of concrete. An interval of more than 15 minutes between placing of any two consecutive batches shall constitute cause for stopping operations, and Contractor shall remove all concrete placed beyond the last scheduled joint or install a joint of the type and at the location as directed by the Engineer.

Concrete shall be deposited as near to expansion and construction joints as possible without disturbing them but shall not be dumped onto a joint assembly. Concrete shall be thoroughly consolidated against and along the faces of all forms, adjacent pavement or curb and gutter, and on both sides of all joint assemblies. Vibrators shall not be permitted to come in contact with joint assemblies, the grade, or side forms, and shall not be operated longer than 15 seconds in any one location.

Manual methods of placing, spreading, and compacting may be used in the construction of pavement lanes of irregular width or widths less than 10 feet, and sections of intersections or other locations with complex variable surface configurations when permitted by the Engineer. Workmen shall not be allowed to walk in the freshly placed concrete.

324.3.6 Shaping and Initial Finishing: Concrete shall be struck off, consolidated, and float-finished with a slipform paver, mechanical finishing machine, vibrating screed, or by hand finishing methods when approved by the Engineer so that the complete pavement will conform to the thickness and cross-section requirements of the plans and specifications. When the pavement being constructed is contiguous to existing parallel concrete pavement or curb and gutter, the elevation of the new pavement surface shall conform as closely as possible to the elevation of the existing pavement or gutter surface in a manner that will prevent ponding. The difference in elevation shall not exceed 1/4 inch.

Water shall not be applied to the pavement surface during screeding and finishing operations in excess of the amount lost by evaporation. Adding water to the surface of the concrete to assist in finishing operations shall not be permitted. When applications of water to the surface are required to prevent rapid evaporation of water from the surface during finishing operations, it shall be applied as a fog spray and with approved spray equipment.

(A) Slipform Supported on Subgrade Method: When concrete pavement will be placed with slipform paving equipment which will be supported and operate on the subgrade, the subgrade and slipform paver track area shall be brought to proper grade and cross-section by means of a properly designed and operated machine. The equipment shall spread, consolidate, screed and float-finish the concrete in one complete pass of the machine. The machine shall be operated with as nearly a continuous forward movement as possible, and all paving operations shall be so coordinated as to provide uniform progress with stopping and starting of the paver held to a minimum. Sliding side forms shall be rigidly held together to prevent spreading. Any edge slump of the pavement, exclusive of edge rounding, in excess of 1/4 inch shall be corrected.

No abrupt changes in longitudinal alignment of the pavement will be permitted. The horizontal deviation shall not exceed one inch from the alignment established by the Engineer.

While concrete is being spread, compacted and shaped, vibrating units shall be operated within fresh concrete so that the longitudinal axis, at the center of each unit, is not more than 6 inches above the top of the subgrade. Amplitude of vibration shall be sufficient to be perceptible on the surface of concrete along the entire length of vibrating units and for a distance of at least one foot.

(B) Mechanical Equipment Supported on Fixed Form Method: When concrete is spread without the use of internal vibration, the finishing machine shall be equipped with vibrating equipment that will internally vibrate the concrete for the full paving width and with not less than two oscillating or reciprocating screeds. Concrete shall be struck off and consolidated so that the surface will conform to the finished grade and cross-section shown on the project plans and with sufficient material on the surface for floating operations.

After the concrete has been struck off and consolidated, it shall be floated with a longitudinal float of a type approved by the Engineer.

A slipform paver or a single machine, which will effectively spread, consolidate, screed, and float in one operation may

be used in lieu of separate finishing and floating equipment.

(C) Manual Methods with Fixed Forms: Concrete shall be deposited, spread and struck off to such an elevation that, when properly consolidated, the surface will conform to the required lines and grades. Concrete shall be consolidated by internal vibration as it is struck off with a screed. A slight excess of concrete shall be kept in front of the screed at all times during the strike-off operation.

After consolidation and screeding, concrete shall be tamped to the proper surface elevation and cross-section using either a heavy plank with a length in excess of the width of pavement being placed by one foot or more, or with a mechanical vibrating unit spanning the full width between forms. The tamping plank, if used, shall be stiffened as necessary to prevent sag and shall have the lower tamping edge shod with metal. The tamping plank shall be moved forward with a combined vertical tamping and longitudinal screeding motion so that the concrete will be thoroughly consolidated and the surface screeded to the required elevation. A small surplus of concrete shall be kept in front of the tamper or vibrating unit. Tamping or vibrating shall continue until the specified cross-section is obtained and the mortar flushed slightly to the surface. On grades in excess of 5 percent a second strike board shall follow from 25 to 50 feet behind the tamper or vibrating unit and shall be used in the same manner to remove waves caused by the flow of concrete behind the first strike board.

Methods other than the tamping plank may be utilized for screeding when approved by the Engineer.

Pavement shall be finished smooth and true to grade with suitable manually operated floats or powered finishing equipment.

324.3.7 Final Finishing: After the pavement has been float-finished, it shall be scraped with a 10-foot long straightedge equipped with a handle to permit operations from the edge of the pavement, and excess water and laitance shall be removed from the surface. The straightedge shall be operated parallel to the centerline of the pavement and shall be moved forward one-half length after each pass. Irregularities shall be corrected by adding or removing concrete, and disturbed places shall be again straight-edged.

Long-handled floats shall be used only in areas not accessible to finishing equipment and in emergencies, and use of such floats shall be confined to a minimum.

The addition of water to the surface of the concrete to assist in finishing operations shall not be permitted unless approved by the Engineer. When the evaporation rate on the concrete surface exceeds the rate of bleeding of the concrete, measures shall be taken to prevent the rapid evaporation of water from the surface during finishing operations. When allowed by the Engineer, the addition of water to the surface may be permitted when applied as a fog spray with approved spray equipment immediately after screeding and/or between finishing operations. A commercial evaporation reducer that forms a monomolecular film may also be sprayed onto the concrete surface in accordance with the Manufacturer's recommendations. When either of these methods is approved and used, it does not take the place of proper curing methods per Section 324.3.8.

Pavement edges and joints shall be edged in accordance with details shown on the project plans or as directed by the Engineer.

In advance of curing operations, pavement shall be textured. Texturing shall be performed with an artificial turf drag with a board added to assure the weight needed to obtain an approved surface. Artificial turf shall be a molded composite structure with polyethylene face, nylon and polyester backing, a pile height of 0.85 inches, and total weight of 75 oz./sq. yd. The surface obtained during initial surface texturing shall be subject to approval by the Engineer. The texturing approved on the initial construction shall not be changed without the Engineer's approval. Each time the construction is stopped or causes the texturing to stop, the artificial turf must be shaken clean before continuing.

324.3.8 Curing: Curing shall begin immediately following surface texturing and edging. Before concrete placement begins, Contractor shall have at hand and ready to install the materials and equipment needed for adequate curing.

After finishing operations have been completed, the newly placed concrete shall be cured by moist curing methods, by application of a white pigmented liquid membrane compound conforming to the requirements of Section 726, or by a combination of these methods. All surfaces not covered by reasonably waterproof forms shall be kept damp by applying water with a nozzle that so atomizes the flow of water that a fog mist and not a spray is formed until the surface is covered with liquid

membrane compound, the surface has hardened sufficiently to permit sprinkling of the surface, or moist curing by covering with wet burlap or other approved materials can be initiated. Moisture from the nozzle shall not be applied under pressure directly upon the concrete and shall not be allowed to accumulate on the concrete in a quantity sufficient to cause a flow and erode the surface. Moist curing shall be continued until liquid membrane curing compound or other type of curing membrane is applied.

Membrane curing compound shall be applied to all pavement by automatic mechanical method from a construction bridge.

The edges of concrete slabs exposed by the removal of forms shall be protected immediately to provide these exposed surfaces with continuous curing treatment equal to the method selected for curing the pavement surface.

The membrane method of curing may be applied behind the final finishing operation after all free water has disappeared from the surface. Complete and uniform coverage at the rate of one gallon per 100 square feet, or as otherwise recommended by the manufacturer, shall be required. Compound shall be kept agitated to prevent pigment from settling.

324.3.9 Joints: Joints shall be provided in the pavement of the type, dimensions and at the locations as indicated in the plans or as specified herein. Joints in concrete pavement will be designated as transverse expansion joints, longitudinal or transverse construction joints, longitudinal or transverse weakened plane joints, or isolation joints. The faces of all joints shall be perpendicular to the pavement surface. Joints shall be constructed in accordance with the details shown or referenced in the plans and in accordance with the following provisions.

At all times prior to acceptance of the construction, joints shall be maintained clean and free of soil, gravel, and other foreign material except approved types of joint filler materials.

(A) Longitudinal Joints: Longitudinal joints shall be weakened plane or construction joints. Longitudinal weakened plane joints shall be constructed by sawing or by insertion of a parting strip in the plastic concrete to be left in place. Longitudinal construction joints shall be constructed with tie bars or keyways as indicated in the plans.

(B) Transverse Joints: Transverse joints shall be weakened plane, construction or expansion joints. All transverse weakened plane joints will be constructed by sawing and in accordance with the details shown in the project plans. Transverse construction joints shall be constructed in accordance with the details shown or referenced in the project plans. Transverse expansion joints shall be constructed in accordance with the details shown or referenced in the project plans.

Dowel bars when required shall be supported with an approved support system.

(C) Joint Location: Longitudinal and transverse joints shall be constructed at locations as indicated in the project plans. Isolation joints shall be provided around manholes, catch basins, or other elements, which extend into or project through the pavement and act as point of restraint to horizontal or vertical movement of the pavement. Isolation joints shall be located in accordance with Detail 224 or as directed by the Engineer.

324.3.9.1 Construction of Joints:

(A) Sawed Joints: Sawed joints shall be constructed by cutting a groove in the pavement using a single or multiple-blade power saw. The groove shall be cut to the dimensions shown on the project plans. Suitable guidelines or devices shall be used to ensure joints are cut true to the lines as shown on the project plans.

If joints are sawed in stages, the initial saw cut shall be of the minimum width specified and sawed to the required depth. The depth of the initial saw cut in the construction of weakened plane joints shall be a minimum of 1/4 of slab thickness.

Sawing of weakened plane joints shall be done before uncontrolled cracking takes place, and after the concrete has hardened to the extent that tearing or raveling of the edges of the saw cut is not excessive. The exact time for all sawing shall be determined by the Contractor when not otherwise specified.

Any procedure for sawing joints that result in premature, uncontrolled cracking shall be revised immediately. The Contractor shall be responsible for replacing or repairing areas containing uncontrolled cracking and for repairing spalled or chipped concrete along the edges of sawed joints to the satisfaction of the Engineer.

After saw cutting of the joint and just prior to sealing the joint, the internal joint surfaces shall be cleaned of all dirt, curing compound residue, laitance and other foreign materials. The internal joint surface shall be defined as the sawed portion of the joint and the resultant crack for the full depth of the pavement.

Sealing of sawed joints where required shall be completed prior to the opening of the pavement to traffic unless otherwise approved by the Engineer. When delayed sealing of sawed joints is permitted, saw cuts and formed recess to be filled with sealant shall be protected to ensure thorough curing of the concrete along the edges of the joint recesses and to prevent entry of foreign materials into the joint. At the Contractor's option, inert compressible joint filler material such as plastic backer rod or upholstery cord may be inserted into joints immediately after sawing or forming of the joint recess to provide curing protection and prevent entry of foreign material. If absorptive filler material is used, it shall be thoroughly moistened either before or immediately after installation in the sawed groove. When filler material is rope, or similar material which does not fill the entire depth of sawed groove, it shall be depressed not less than 1/2 inch below the pavement surface before the pavement is opened to traffic.

(B) Expansion and Construction Joints: Longitudinal and transverse expansion and construction joints shall be as required by the project plans.

(C) Isolation Joints: Isolation joints unless otherwise detailed in construction documents shall be 1/2 inch wide expansion joints in accordance with Detail 224 or as directed by the Engineer.

(D) Sealing of Joints: Sealant shall be applied in accordance with the sealant manufacturer's recommendations. A primer shall be furnished and applied after the joint has been cleaned and prepared to receive sealant when indicated in the manufacturer's recommendations.

Prior to the application of the sealant, an approved type of inert, compressible joint filler material such as plastic backer rod or upholstery cord, or an approved type of bond breaker, shall be inserted along the joint in accordance with the details shown on the project plans. The joint shall then be filled with sealant to a level not less than 1/8 inch or more than 1/4 inch below the elevation of the pavement surface adjacent to the joint edge.

The equipment used to apply sealant shall be as recommended by the sealant manufacturer. Sealant shall not be spilled on the surface of the concrete pavement, and Contractor shall remove any sealant inadvertently spilled on the pavement surface.

(E) Repair of Cracks, Spalls, Raveling and Tearing: Contractor shall be responsible for replacing or repairing all areas of pavement containing uncontrolled cracking, surface spalls, or other types of surface. Repairs when authorized shall be made and completed by methods acceptable to the Engineer.

324.4 TESTS OF FINISHED PAVEMENT:

324.4.1 Smoothness: The pavement surface including pavement in intersections will be tested with a ten-foot straight-edge placed parallel to the centerline of the pavement in each lane. Ordinates measured from the face of the straight-edge to pavement surface shall at no place exceed one-quarter inch. Areas that do not meet the required surface accuracy as determined by straight-edge testing shall be marked, and Contractor shall at his own expense and as required by the Engineer either:

(1) Grind down areas higher than 1/4 inch but not more than 1/2 inch above the correct surface.

(2) Correct areas lower than 1/4 inch but not lower than 1/2 inch below the correct surface by grinding down the adjacent areas.

(3) Remove and replace pavement when the deviation exceeds 1/2 inch from the correct surface. Area replaced shall be of a length, width and depth as required to allow formation of a new slab of the required quality. The area replaced shall be compatible with the joint layout shown on the project plans as determined by the Engineer.

After grinding, the finished surface of the ground area shall be provided with a uniform texture acceptable to the Engineer. The method of texturing shall be approved by the Engineer.

324.4.2 Pavement Thickness: Concrete pavement shall be constructed in accordance with the thickness requirements of the plans and specifications. Tolerances for base and subgrade construction and other provisions of these specifications, which may affect thickness, shall not be construed to modify such thickness requirements.

Pavement thickness testing shall begin after achieving pavement smoothness compliance. For the purpose of determining acceptability for thickness, cores shall be drilled by the Contractor at the locations specified by the Engineer. Cores shall have a minimum diameter of four inches. Length of cores will be determined in accordance with the requirements of AASHTO T-148.

In calculating average length, cores that have a length in excess of the thickness specified by more than 0.25 of an inch, will be deemed to have a length of the specified thickness plus 0.25 of an inch. Field length measurements will be acceptable in lieu of average length measurement in accordance with the requirements of AASHTO T-148, provided the original core in any secondary unit meets or exceeds the specified thickness. Measurements in accordance with the requirements of AASHTO T-148 will be required on any questionable thickness measurements and on the three cores used to determine the average length for payment, regardless of length.

A primary unit of pavement shall be the area of pavement placed in each day's paving operation. Each intersection or special section shall be considered as a primary unit. A secondary unit of pavement shall consist of 1,000 linear feet, or fraction thereof, of each traffic lane. Each 1,300 square yards of pavement in intersections, etc., shall be considered a secondary unit regardless of when the concrete was placed.

One core shall be drilled in each secondary unit. If the length of that core is not deficient by more than 0.25 of an inch, that secondary unit will be measured for payment at 100 percent. If the length of that core is deficient by more than 0.25 of an inch but less than 1.0 inch, two additional cores shall be drilled within that secondary unit and the length of the three cores averaged. If the average length is not deficient by more than 0.25 of an inch, that secondary unit will be measured for payment at 100 percent. If the average length of the three cores is deficient by more than 0.25 of an inch, that secondary unit will be measured for payment in accordance with the requirements of Table 324-1.

If the core in the secondary unit is deficient by more than 1.00 inch, that core will not be used in determining the average thickness of that secondary unit. Additional cores shall be drilled at intervals not to exceed ten feet in each direction from the deficient core, parallel to the main-line centerline, until one core is obtained in each direction that is not deficient by more than 1.00 inch. The pavement between these two cores will be evaluated separately from the balance of the pavement in that secondary unit. The limits for evaluation shall be between the longitudinal weakened plane or construction joint on each side of the core and between the next transverse weakened plane, construction, or expansion joint beyond each of the last two cores. Unless the Engineer allows the pavement to remain, it shall be removed and replaced with pavement of the specified thickness and no payment will be made for the removed pavement.

If the pavement in the deficient area is removed, either by the order of the Engineer or at the option of the Contractor, it shall be removed between the limits of the evaluation. After the pavement has been replaced, one core shall be drilled at random in that secondary unit after deducting the area of the replaced pavement and one core shall be drilled in the new pavement. Pavement represented by the core drilled in the secondary unit, less the replaced pavement, will be measured for payment as hereinbefore specified. The core drilled in the replaced pavement shall be not less than the specified thickness; otherwise, that pavement will not be measured or paid for.

At all locations where cores have been drilled, the resulting holes shall be filled with concrete in a manner satisfactory to the Engineer.

324.5 PROTECTION OF PAVEMENT:

The Contractor shall be responsible for taking adequate steps to protect concrete placed during rain, or hot or cold weather as defined in ACI Standards. Any concrete damaged by rain or extreme temperatures shall be removed and replaced at the Contractor's expense.

When ordered by the Engineer, pavement crossings shall be constructed for the convenience of public traffic. Where motor vehicles are encountered, a temporary bridge to span the newly placed concrete will be provided.

No traffic or Contractor's equipment, except as hereinafter provided, will be permitted on the pavement until the concrete has developed a compressive strength of 3500 psi.

Equipment for sawing joints will be permitted on the pavement when, in the Contractor's judgment, the concrete has developed sufficient strength to support the equipment without damage to the concrete. In case of visible cracking or other damage to the pavement, operation of the equipment on the pavement shall be immediately discontinued.

Any damage to the pavement resulting from early use of pavement by the Contractor's equipment shall be repaired by the Contractor at his expense.

324.6 METHOD OF MEASUREMENT:

Portland Cement Concrete Pavement will be measured by the square yard. Any opening in excess of one square yard will not be measured for payment.

324.7 BASIS OF PAYMENT:

The accepted quantities of Portland Cement Concrete Pavement, measured as provided for herein, will be paid for at the contract unit price complete in place, except that where the average length of cores indicates pavement deficient in thickness by more than 0.25 of an inch but not more than 1.00 inch, payment will be made as specified in Table 324-1. Payment will be made to the nearest cent.

No additional payment will be allowed for pavement constructed in excess of the thickness specified on the project plans.

TABLE 324-1

PAVEMENT THICKNESS PAYMENT REDUCTION (PCCP)

Core Thickness, Less Than Specified Thickness, Inches	Percent of Contract Unit Price Allowed
0.00 to 0.25	100
0.26 to 0.35	93
0.36 to 0.45	85
0.46 to 0.55	75
0.56 to 0.75	63
0.76 to 1.00	50

- End of Section -

SECTION 710

ASPHALT CONCRETE

710.1 GENERAL:

Asphalt concrete shall be a mixture of asphalt cement and mineral aggregates. Mineral admixture shall be included in the mixture when required by the mix design or by the Engineer. Asphalt concrete shall be produced in accordance with Section 321.

The designation for asphalt concrete mixes shall be based on the nominal maximum aggregate size of the mix. The applicable mix designations are 3/8 inch, 1/2 inch, 3/4 inch. Each mix shall be designed using Marshall or Gyratory compaction methods.

The following table (Table 710-1) displays the recommended range for lift thickness for various asphalt concrete mix designations found within Section 710. Please note that the minimum lift thicknesses are based on each mix designation's "Nominal Aggregate Size" and the relative coarseness of its gradation. The compacted thickness of layers placed shall not exceed the Maximum Lift Thickness of Table 710-1 except as otherwise provided in the plans and specifications, or if approved in writing by the Engineer.

TABLE 710-1

RECOMMENDED LIFT THICKNESS FOR ASPHALT CONCRETE MIXES

Asphalt Concrete Mix Designation (inches)	Minimum Lift Thickness Marshall Mixes	Maximum Lift Thickness Marshall Mixes	Minimum Lift Thickness Gyratory Mixes	Maximum Lift Thickness Gyratory Mixes
3/8"	1.0 inches	2.0 inches	1.5 inches	3.0 inches
1/2"	1.5 inches	3.0 inches	2.0 inches	3.0 inches
3/4"	2.5 inches	4.0 inches	3.0 inches	4.0 inches

710.2 MATERIAL:

710.2.1 Asphalt Binder: The asphalt binder specified in this section has been developed for use in desert climate conditions. When used in other climates, consideration should be given to adjustments in the asphalt binder selection. The asphalt binder shall be Performance Grade Asphalt conforming to the requirements of Section 711 for PG 70-10, unless otherwise approved by the Engineer or specified differently in the plans or special provisions.

710.2.2 Aggregate: Coarse and Fine aggregates shall conform to the applicable requirements of this section. Coarse mineral aggregate shall consist of crushed gravel, crushed rock, or other approved inert material with similar characteristics, or a combination thereof, conforming to the requirements of these specifications.

Coarse aggregate for hot mix asphalt is material retained on or above the No. 4 sieve and Fine aggregate is material passing the No. 4 sieve. Aggregates shall be relatively free of deleterious materials, clay balls, and adhering films or other material that prevent coating with the asphalt binder. Coarse and Fine aggregates shall conform to the following requirements when tested in accordance with the applicable test methods.

TABLE 710-2 COARSE/FINE AGGREGATE REQUIREMENTS		
Characteristics	Test Method	Requirements
Fractured Faces, % (Coarse Aggregate Only)	Arizona 212	85, 1 or more 80, 2 or more
Uncompacted Voids, % Min.	AASHTO T-304, Method A	45
Flat & Elongated Pieces, % 5:1 Ratio	ASTM D4791	10.0 Max.
Sand Equivalent, %	AASHTO T-176	50 Min.
Plasticity Index	AASHTO T-90	Non-plastic
L.A. Abrasion, % Loss	AASHTO T-96	9 max. @ 100 Rev. 40 max. @ 500 Rev
Combined Bulk Specific Gravity	AI MS-2/SP-2	2.35-2.85
Combined Water Absorption	AI MS-2/SP-2	0-2.5%

Tests on aggregates used in asphalt concrete outlined above, shall be performed on materials furnished for mix design purposes and composited to the mix design gradation.

Blend sand (naturally occurring or crushed fines) shall be clean, hard and sound material, which will readily accept asphalt binder coating. The blend sand grading shall be such that, when it is mixed with the other mineral aggregates, the combined product shall meet the requirements of Table 710-2.

The natural sand shall not exceed 20 percent for the Marshall mixes and 15 percent for the Gyratory mixes by weight of the total aggregate for a mix.

710.2.3 Reclaimed Asphalt Pavement (RAP): When allowed by the Engineer, Reclaimed Asphalt Pavement (RAP), as defined in Section 701.5, may be used in asphalt concrete provided all requirements of Section 710 are met. References to use of RAP in Section 710 apply only if RAP is used as part of the mixture.

When RAP is used in asphalt concrete, it shall be of a consistent gradation, asphalt content, and properties. When RAP is fed into the plant, the maximum RAP particle size shall not exceed 1 1/2 in. The percentage of asphalt in the RAP shall be established in the mix design. The percentage of RAP binder shall be established in the mix design.

When RAP is used in base and intermediate courses, the amount of RAP aggregate and RAP binder should not exceed 30% contribution; Surface courses should be limited to 20% RAP aggregate and RAP binder contribution.

In addition to the requirements of Section 710.3.1, the job mix formula shall indicate the percent of asphalt RAP and the percent and performance grade of virgin (added) asphalt binder.

When less than or equal to 15% RAP binder is used by weight of total binder in the mix, the added virgin binder shall meet the requirements for PG 70-10 as shown in Section 711. When greater than 15% RAP is used by weight of the total binder in the mix, the added virgin binder will be dropped one grade for low and high temperature properties to a PG 64-16, unless testing indicates that the blend of the recovered RAP binder and virgin binder meets the requirements for PG 70-10 as shown in Section 711. The virgin asphalt binder shall not be more than one standard asphalt material grades different than the specified mix design binder grade.

710.2.4 Mineral Admixture: Mineral admixture when used as an anti-stripping agent in asphalt concrete shall conform to the requirements of AASHTO M-17. Mineral admixture used in asphalt concrete shall be dry hydrated lime, conforming to the requirements of ASTM C1097 or Portland cement conforming to ASTM C150 Type II or ASTM C595 Type IP. The amount

of hydrated lime or Portland cement used shall be determined by the mix design. The minimum mineral admixture content within a mix will be 1.00 percent, by weight of total aggregate.

710.3 MIX DESIGN REQUIREMENTS:

710.3.1 General: The mix design for asphalt concrete shall be prepared by a laboratory that is accredited through the AASHTO Accreditation Program (AAP) in Hot Mix Asphalt Aggregates and Hot Mix Asphalt. The laboratory shall be under the direct supervision of a Civil Engineer, registered by the State of Arizona, and who is listed by ADOT as a "Qualified Asphaltic Concrete Mix Design Engineer" within ADOT's latest list of approved laboratories. The latest list of approved laboratories is available on ADOT's web page www.azdot.gov. The date of the design shall not be older than two years from the date of submittal, unless supportive documentation is provided and approved by the Engineer.

The mix design report shall include the following elements as a minimum.

(1) The name and address of the testing organization and the person responsible for the mix design report.

(2) The mix plant identification and/or location, as well as the supplier or producer name.

(3) A description of all products that are incorporated in the asphalt concrete along with the sources of all products, including admixtures and asphalt binder, and their method of introduction.

(4) The supplier and grade of asphalt binder, the source and type of mineral aggregate, and the percentage of asphalt binder and mineral admixture used.

(5) The percentage of RAP and RAP Binder being contributed to the total mix shall be included in the mix design report.

(6) The mix design report shall state whether it is Gyratory or Marshall, and the size designation.

(7) The results of all testing, determinations, etc., such as: specific gravity and gradation of each component, water absorption, sand equivalent, loss on abrasion, fractured coarse aggregate particles, Tensile Strength Ratio (ASTM D4867), Marshall stability and flow, asphalt absorption, percent air voids, voids in mineral aggregate, and bulk density. Historical abrasion values may be supplied on existing sources. The submittal should include a plot of the gradation on the Federal Highway Administration's 0.45 Power Gradation Chart, plots of the compaction curves and the results of moisture sensitivity testing.

(8) The laboratory mixing and compaction temperature ranges for the supplier and grade of asphalt binder used within the mix design.

(9) A specific recommendation for design asphalt binder content and any limiting conditions that may be associated with the use of the design, such as minimum percentages of crushed or washed fine aggregate.

(10) The supplier's product code, the laboratory Engineer's seal (signed and dated), and the date the design was performed.

(11) If a Warm Mix Technology or additive is used, the following shall be included:

- Technology type and supporting manufacturer information; including instructions pertaining to laboratory mixture temperatures and curing.
- Amount (%) of additive (technology) used in the mixture.
- Attached copy of the ADOT approved product list, showing additive/technology
- Minimum plant production temperature shall not fall below manufacturer's recommendation.
- Minimum field compaction temperature shall be identified.
- Identify any special mixing or compaction temperatures or special methods to be used when conducting Quality Assurance or Quality Control testing of field collected samples. Example: if the field collected samples of warm mix asphalt can be treated as conventional hot asphalt mix, provide the equivalent conventional hot asphalt mix compaction temperature.

The mix design shall be submitted to the Agency or Engineer by the Contractor/Supplier for which it was developed as part of his project submittals. Once the mix design has been approved by the agency or Engineer, the Contractor and/or his supplier shall not change plants nor use additional mixing plants without prior approval of the Engineer. If a Contractor/Supplier elects to change the source of mineral admixture or binder, a volumetric check point may be completed in lieu of a new mix design. The checkpoint shall comply with the mix design volumetric parameters listed in Table 710-3 for Marshall mixes or Table 710-5 for Gyratory mixes. Any change shall be to an equal alternative material, and this shall not apply to changes in aggregate source. Any changes in the plant operation, the producer's pit, modifiers in the asphalt binder, or any other item that will cause an adjustment in the mix, shall be justification for a new mix design to be submitted.

710.3.2 Mix Design Criteria: The mix design shall be performed by one of two methods, Marshall Mix Design or Gyratory Mix Design. The method shall be specified on the plans, special provisions, or by the Engineer. A minimum of 4 points will be used to establish the mix design results. The oven aging period for both Marshall and Gyratory mix design samples shall be 2 hours.

710.3.2.1 Marshall Mix Design: The Marshall Mix Design shall be performed in accordance with the requirements of the latest edition of the Asphalt Institute's Manual, MS-2 "Mix Design Methods for Asphalt Concrete." The mix shall use the compactive effort of 75 blows per side of specimen. The mix shall comply with the criteria in Table 710-3.

TABLE 710-3
MARSHALL MIX DESIGN CRITERIA

Criteria	Requirements			
	3/8" Mix	1/2" Mix	3/4" Mix	Designated Test
1. Voids in Mineral Aggregate: %, min	15.0	14.0	13.0	AI MS-2
2. Effective Voids: %, Range	4.0±0.2	4.0 ±0.2	4.0 ±0.2	AI MS-2
3. Absorbed asphalt: %, Range*	0-1.0	0-1.0	0-1.0	AI MS-2
4. Dust to Eff. Asphalt Ratio, Range **	0.6-1.4	0.6-1.4	0.6-1.4	AI MS-2
5. Tensile Strength Ratio: % Min.	65	65	65	ASTM D4867
6. Dry Tensile Strength: psi, Min.	100	100	100	ASTM D4867
7. Stability: pounds, Minimum	2,000	2,500	2,500	AASHTO T-245
8. Flow: 0.01-inch, Range	8-16	8-16	8-16	AASHTO T-245
9. Mineral Aggregate Grading Limits				AASHTO T-27

		Percent Passing with Admix	
Sieve Size	3/8 inch Mix	1/2 inch Mix	3/4 inch Mix
1-1/4 inch	—	—	—
1 inch	—	—	100
3/4 inch	—	100	90 – 100
1/2 inch	100	85 – 100	—
3/8 inch	90-100	62 – 85	62 – 77
No. 8	45-60	40 – 50	35 – 47
No. 40	10-22	10 – 20	10 – 20
No. 200	2.0 – 10.0	2.0 – 10.0	2.0 – 8.0

* Unless otherwise approved by the Engineer.

** The ratio of the mix design composite gradation target for the No. 200 sieve, including admixture, to the effective asphalt content shall be within the indicated range.

710.3.2.2 Gyratory Mix Design: Gyratory Mix Designs shall be performed in accordance with the requirements of latest edition of the Asphalt Institute's SP-2 manual. Mix design laboratory compacted specimens shall be prepared using a gyratory compactor in accordance with AASHTO T-312.

The mix design shall be formulated in a manner described for volumetric mix designs in the current edition of the Asphalt Institute Manual SP-2, except the number of trial blend gradations necessary will be determined by the mix design laboratory. Duplicate gyratory samples shall be prepared at a minimum of four (4) binder contents to select the recommended binder content. The gyratory specimens shall be compacted to 160 gyrations. Volumetric data for the design number of gyrations, N_{des}, and the initial number of gyrations, N_{ini}, are then back calculated based on the bulk specific gravity, G_{mb}, of the N_{max} specimens and the height data generated during the compaction process of those same specimens.

TABLE 710-4	
Number of Gyrations	
N_{ini}	8
N_{des}	100
N_{max}	160

The corrected density of the specimens shall be less than 89.0 percent of maximum theoretical density at N_{ini}. The corrected density of the specimens shall be less than 98.0 percent of maximum theoretical density at N_{max}. The Gyratory mix shall comply with the criteria in Table 710-5.

TABLE 710-5				
GYRATORY MIX DESIGN CRITERIA				
Criteria	**Requirements**			**Designated Test**
	3/8" Mix	**1/2" Mix**	**3/4" Mix**	**Method**
1.Voids in Mineral Aggregate: %, Min.	15.0	14.0	13.0	AI SP-2
2.Effective Voids: %, Range	4.0 ± 0.2	4.0 ± 0.2	4.0 ± 0.2	AI SP-2
3.Absorbed Asphalt: %, Range *	0 - 1.0	0 - 1.0	0 - 1.0	AI SP-2
4.Dust to Eff. Asphalt Ratio, Range **	0.6 – 1.4	0.6 – 1.4	0.6 – 1.4	AI SP-2
5.Tensile Strength Ratio: %, Min.	75	75	75	ASTM D4867
6.Dry Tensile Strength: psi, Min.	75	75	75	ASTM D4867
7. Mineral Aggregate Grading Limits				AASHTO T-27
	Percent Passing with Admix			
Sieve Size	**3/8 inch Mix**	**1/2 inch Mix**	**3/4 inch Mix**	
1 inch	—	—	100	
3/4 inch	—	100	90-100	
1/2 inch	100	90-100	43-89	
3/8 inch	90-100	53-89	—	
No. 8	32-47	29-40	24-36	
No. 40	2-24	3-20	3-18	
No. 200	2.0-8.0	2.0-7.5	2.0-6.5	

* Unless otherwise approved by the Engineer.

** The ratio of the mix design composite gradation target for the No. 200 sieve, including admixture, to the effective asphalt content shall be within the indicated range.

710.3.2.3 Moisture Sensitivity Testing: Moisture sensitivity testing will be performed in accordance with ASTM D4867 for both Marshall and Gyratory mix designs, without the freeze/thaw cycles. The minimum required Tensile Strength Ratio is indicated in the tables above.

- ***End of Section -***

SECTION 711

PAVING ASPHALT

711.1 GENERAL:

The asphalt shall be produced from crude asphalt petroleum or a mixture of refined liquid asphalt and refined solid asphalt. It shall be free from admixture with any residues obtained by the artificial distillation of coal, coal tar, or paraffin oil and shall be homogeneous and free from water.

Polymer modified asphalt cement shall be produced from crude asphalt petroleum and a polymer or blend of polymers mixed to produce a homogeneous material free from water.

Asphalt shall not be heated during the process of its manufacture, storage, or during construction so as to cause injury as evidence by the formation of carbonized particles.

711.2 TESTING REQUIREMENTS:

Paving asphalt shall be classified by the Performance Grading System and shall conform to the requirements set forth in Table 711-1 and AASHTO M-320 with the PAV temperature changes noted in the table. On all grades, flash point temperature AASHTO T-48: minimum 230 °C and mass loss, maximum 1.00 percent.

TABLE 711-1
PERFORMANCE GRADING SYSTEM

	PG 58-22	PG 64-16	PG 70-10	PG 76-16
Original Asphalt				
Viscosity, AASHTO T-316 (Note 1) Max. 3 Pa-s, Test Temp, °C	135	135	135	135
Dynamic Shear AASHTO T-315 (Note 2) G*/Sin δ, Min., 1.0 kPa Test Temp. @ 10 rad/s, °C	58	64	70	76
Tests Using Rolling Thin Film Oven Residue (AASHTO T-240)				
Mass Loss, Maximum %	1.0	1.0	1.0	1.0
Dynamic Shear AASHTO T-315 G*/Sin δ, Min., 2.20 kPa Test Temp. @ 10 rad/s, °C	58	64	70	76
Tests Using Pressure Aging Vessel Residue (AASHTO R-28)				
PAV Aging Temperature, °C (AASHTO R-28)	100	100	110	110
Dynamic Shear AASHTO T-315 G*·Sin δ, Max., 5000 kPa Test Temp. @ 10 rad/s, °C	22	28	34	34
Creep Stiffness, AASHTO T-313 (Note 3) S, Maximum, 300.0 Mpa *m*-value, Minimum, 0.300 Test Temp. @ 60s, °C	-12	-6	0	-6
Direct Tension, AASHTO T-314 (Note 3) Failure Strain, Minimum 1.0% Test Temp. @ 1.0 mm/min. °C	-12	-6	0	-6

NOTES:
(1) This requirement may be waived at the discretion of the specifying agency if the supplier warrants that the asphalt binder can be adequately pumped and mixed at temperatures that meet all applicable safety standards.

(2) For quality control of unmodified asphalt cement production, measurement of the viscosity of the original asphalt cement may be substituted for dynamic shear measurements of G*/sin (d) at test temperatures when the asphalt is a Newtonian fluid. Any suitable standard means of viscosity measurement may be used, including capillary or rotational viscometer (AASHTO T-210 or AASHTO T-202).

(3) If the creep stiffness is below 300 MPa, the direct tension test is not required. If the creep stiffness is between 300 and 600 MPa, the direct tension failure strain requirement can be used in lieu of the creep stiffness requirement. Direct tension test is recommended for polymer modified asphalt binders. The m-value requirement must be satisfied in all cases.

Polymer modified paving asphalt shall be classified by the Performance Grading System and shall conform to the requirements set forth in Table 711-2 and AASHTO M-320 with the PAV temperature changes noted in the table. On all Grades Flash Point Temperature AASHTO T-48: Minimum 230 °C and Mass Loss, Maximum 1.00 percent. P is for Polymer and TR is for Tire Rubber.

TABLE 711-2
PERFORMANCE GRADING SYSTEM

	PG 64-28P	PG-76-22P	PG76-22TR Type 1 (Note 4)	PG76-22TR Type 2 (Note 4)
Viscosity, AASHTO T-316 (Note 1) Max. 3 Pa-s, Test Temp, °C	135	135	135	135
Dynamic Shear, AASHTO T-315 (Note 2) G*/Sin δ, Min., 1.0 kPa Test Temp. @ 10 rad/s, °C	64	76	76	76
Elastic recovery, ASTM D6084 Procedure "B" @ 10°C	65	65	65	55
Phase Angle, Max	75	75	75	75
Separation test, Texas 540 % Max	4	4	4	4
Solubility in Trichloroethylene, ASTM D2042 or n-propyl bromide, ASTM D7553 % Minimum	—	—	97.5	—
Tests Using Rolling Thin Film Oven Residue (AASHTO T-240)				
Mass Loss, Maximum %	1.0	1.0	1.0	1.0
Dynamic Shear, AASHTO T-315 G*/sin δ, Min., 2.20 kPa Test Temp. @ 10 rad/s, °C	64	76	76	76
Tests Using Pressure Aging Vessel Residue (AASHTO R-28)				
PAV Aging Temperature, °C (AASHTO R-28)	100	110	110	110
Dynamic Shear, AASHTO T-315 G*sin δ, Max., 5000 kPa Test Temp. @ 10 rad/s, °C	22	31	31	31
Mass Loss, AASHTO T-240 Weight % Max	1.0	1.0	1.0	1.0
Creep Stiffness, AASHTO T-313 S, Maximum, 300 Mpa *m*-value, Minimum, 0.300 Test Temp. @ 60s, °C	-18	-12	-12	-12
Direct Tension, AASHTO T-314 (Note 3) Failure Strain, Minimum 1.0% Test Temp. @ 1.0 mm/min. °C	-18	-12	-12	-12

NOTES: *(Continued on next page.)*

(1) This requirement may be waived at the discretion of the specifying agency if the supplier warrants that the asphalt binder can be adequately pumped and mixed at temperatures that meet all applicable safety standards.

(2) For quality control of unmodified asphalt cement production, measurement of the viscosity of the original asphalt cement may be substituted for dynamic shear measurements of G*/Sin δ, at test temperatures when the asphalt is a Newtonian fluid. Any suitable standard means of viscosity measurement may be used, including capillary or rotational viscometer (AASHTO T-210 or AASHTO T-202).

(3) If the creep stiffness is below 300 MPa, the direct tension test is not required. If the creep stiffness is between 300 and 600 MPa, the direct tension failure strain requirement can be used in lieu of the creep stiffness requirement. Direct tension test is recommended for polymer modified asphalt binders. The m-value requirement must be satisfied in all cases.

(4) "TR" binders shall have 9% to 11% reclaimed tire rubber and enough virgin polymer to meet all performance grade criteria specified. The blend percentages shall be listed on the Certificate of Compliance by the manufacturer. Type 1 shall meet solubility limits.

711.3 TEST REPORT AND CERTIFICATION:

Test reports and certifications shall be provided to the Engineer when requested by the Engineer. At the time of delivery of each shipment of asphalt, the supplier supplying the material shall deliver to the purchaser a certified copy of the test report which shall indicate the name of the refinery and supplier, type and grade of asphalt delivered, date and point of delivery, quantity delivered, delivery ticket number, purchase order number, and results of the above specified tests. The test report shall be signed by an authorized representative of the supplier certifying that the product delivered conforms to the specifications for the type and grade indicated.

Until the certified test reports and samples of the material have been checked by the Engineer, that material will be only tentatively accepted by the Contracting Agency. Final acceptance will be dependent upon the determination of the Engineer that the material involved fulfills the requirements prescribed. The certified test reports and the testing required in connection with the reports shall be at no additional cost to the Contracting Agency.

711.4 TEMPERATURES:

Paving asphalt shall be heated in such a manner that steam or hot oils will not be introduced directly into the paving asphalt during heating.

711.5 CONVERSION OF QUANTITIES:

When pay quantities of paving asphalt are determined from volumetric measurements, the volumetric measurement at any temperature shall be reduced to the volume the material would occupy at 60 degrees F. in accordance with ASTM D1250. In converting volume to weight, the computations shall be based on Table 711-3.

TABLE 711-3
ASPHALT CEMENT QUANTITY CONVERSION

Grade of Material	Gals. Per Ton of 60 °F.	Lbs. Per Gal at 60 °F.
PG 58-22	236	8.47
PG 64-16	235	8.51
PG 70-10	235	8.51
PG 64-28P	236	8.47
PG 76-22P, TR	236	8.47
PG 76-16	233	8.58

- End of Section -

SECTION 725

PORTLAND CEMENT CONCRETE

725.1 GENERAL:

Portland cement concrete shall be composed of cementitious materials, fine and coarse aggregates, water, and, if specified or allowed, certain chemical admixtures and additives.

TABLE 725-1
CONCRETE CLASSES - MINIMUM REQUIREMENTS

Class of Concrete	Minimum Cementitious Materials Content (lbs. per cubic yard)	Minimum Compressive Strength * at 28 Days (psi)
AA	600	4000
A	520	3000
B	470	2500
C	420	2000
* In accordance with Section 725.8		

725.2 CEMENTITIOUS MATERIALS:

Hydraulic cement shall consist of either Portland cement or Blended Hydraulic cement.

Portland cement shall conform to the current revision requirements of ASTM C150 for Type II for moderate sulfate resistance, Type III for high early strength, or Type V for high sulfate resistance, and shall not contain more than 0.60 percent total equivalent alkalis.

Blended hydraulic cement shall conform to the current revision requirements of ASTM C595 for Portland Pozzolan cement Type IP (MS) for moderate sulfate resistance or (HS) for high sulfate resistance, Portland Limestone cement Type IL (MS) for moderate sulfate resistance or (HS) for high sulfate resistance, or Ternary Blended cement Type IT (MS) for moderate sulfate resistance or (HS) for high sulfate resistance.

Up to 25 percent by weight of the Table 725-1 minimum cementitious materials requirements may be an approved coal ash or natural pozzolan when the mix design incorporates C150 Portland cement of any Type or C595 Type IL Blended Limestone cement per Table 725-2. Additional coal ash or pozzolanic material in excess of the minimum Table 725-1 requirements may be incorporated into any concrete mix design to achieve enhanced performance, upon approval of the Engineer.

Supplementary Cementitious Materials (SCM) shall not be used as an additional cementitious materials replacement in concrete in combination with Portland Pozzolan cement Type IP or Ternary Blended cement Type IT without prior approval by the Engineer.

TABLE 725-2

Cement Type ASTM C150/C595	**Allowable Coal Ash or Natural Pozzolan (%)**	**Included Coal Ash or Natural Pozzolan (%)**	**Allowable Limestone (%)**
Type II	</= 25	—	</= 5
Type III	</= 25	—	</= 5
Type V	</= 25	—	</= 5
Type IL(X)[A]	</= 25	—	> 5 and </= 15
Type IP(X)[B]	—	</= 25	—
Type IT(PX)(LX)[C]	—	</= 25	</= 15

Notes: *(See following page.)*

A) Type IL - Portland cement blended or interground with limestone.
(X) - the targeted percentage of limestone in the product expressed as a whole number by mass of the final blended product.
B) Type IP - Portland cement blended or interground with coal ash or natural pozzolan.
(X) - the targeted percentage of coal ash or natural pozzolan in the product expressed as a whole number by mass of the final blended product.
C) Type IT - Portland cement blended or interground with coal ash or natural pozzolan and limestone.
(PX) - where P stands for coal ash or natural pozzolan and X is the targeted percentage expressed as a whole number by mass of the final blended product.
(LX) - where L stands for limestone and X is the targeted percentage expressed as a whole number by mass of the final blended product.

Cementitious materials shall be stored in such manner as to permit ready access for the purpose of inspection and identification, and so as to be suitably protected against damage by contamination or moisture. Should any lot of bulk cementitious material be delivered to the site show evidence of contamination, the Engineer may require that such lot be removed from the site.

725.2.1 Supplementary Cementitious Materials (Pozzolans): Supplementary Cementitious Materials to be used in concrete or furnished under this specification shall conform to the appropriate ASTM requirements as follows:

Coal ash (such as fly ash or bottom ash) or natural pozzolan (raw or calcined)	ASTM C618 and C311
Silica Fume	ASTM C1240

Upon request, the Contractor shall obtain and deliver to the Engineer a Certification of Analysis or Certification of Compliance signed by the pozzolan supplier identifying the pozzolanic material and stating the pozzolan delivered to the batching site complies with the appropriate specifications. The cost of furnishing tested pozzolan shall be considered as included in the contract price and no additional allowance will be made therefore.

Pozzolanic materials shall be handled and stored in the same manner as other cementitious materials. When facilities for handling a bulk pozzolan are not available, the pozzolan shall be delivered in original unopened sacks bearing the name and brand of the supplier, the type and source of the pozzolan, and the weight contained in each sack plainly marked thereon.

725.3 AGGREGATES:

Coarse and fine aggregate shall conform to the applicable requirements of ASTM C33. Coarse aggregate grading requirements shall conform to the appropriate rock size designation in the Grading Requirements for Coarse Aggregate, Table 3. Fine aggregate grading requirements shall conform to Section 6, Table 1.

The average value of three successive sand equivalent samples shall not be less than 70 when tested in accordance with ASTM D2419. No individual sample shall have a sand equivalent less than 65.

The loss by abrasion in the Los Angeles Abrasion Machine, determined as prescribed in ASTM C131, shall not exceed 10 percent, by weight, after 100 revolutions nor 40 percent after 500 revolutions.

Prior to the delivery of the aggregates and whenever required during concrete production, the Contractor shall make stockpiles available to the Engineer for testing. All required samples shall be furnished at the expense of the Contractor, and the cost of sampling and testing shall be at the expense of the Contracting Agency.

Reclaimed Concrete Materials (RCM) and Reclaimed Asphalt Pavement (RAP) as defined in Section 701 shall not be used in Portland Cement Concrete without the prior approval of the Engineer.

725.4 WATER:

The water used for mixing concrete shall be potable or shall meet the requirements of ASTM C1602, when tested by a qualified independent testing laboratory.

725.5 ADMIXTURES AND ADDITIVES:

Admixtures or additives of any type, except as otherwise specified, shall not be used unless identified in the approved mix design or authorized by the Engineer.

Water reducing admixtures incorporated into the approved concrete mix design shall meet the requirements of ASTM C494 for the appropriate type.

Air entraining admixtures incorporated into the approved concrete mix design shall meet the requirements of ASTM C260.

Pigments incorporated into the approved concrete mix design for integrally colored concrete shall meet the requirements of ASTM C979.

Fibers incorporated into the approved concrete mix shall meet the requirements of ASTM C1116.

Any admixtures used shall be included in the price for that item.

725.6 MIX DESIGN PROPORTIONING:

A concrete mix design carrying the producer's designated mix number for each type of concrete being furnished under these specifications shall be submitted to the Engineer every two years for approval. Each design shall utilize the proper proportioning of ingredients to produce a concrete mix that is homogeneous and sufficiently workable to provide a consistent and durable concrete product that meets the specified compressive strength and other properties as required by the application.

A concrete mix design submittal shall include the mix identification number and the applicable proportions, weights, and quantities of individual materials incorporated into the mix including the size and source of concrete aggregates, the type and source of cement and coal ash or SCM, and the brand and designation of chemical admixtures or other additives.

In the event there is a modification to the mix design proportions:

(A) Modifications that do not require a new mix design submittal/approval:

(1) Modifications, which do not result in batch, target weights for the fine aggregate or combined coarse aggregates changing by more than 5 percent from the original approved mix design.
(2) Modifications to the percentage of coarse aggregate fractions that do not change the total coarse aggregate volume.
(3) Modifications to dosages of chemical or air-entraining admixtures, within the manufacturer's recommendations.
(4) The incorporation or elimination of chemical admixtures, which are listed on the mix design to effect a change in the time-of-set (retarders or accelerators).

(B) Modifications that require a new mix design submittal/approval and may require performance verification:

(1) Modification to the class of concrete per Table 725-1.
(2) Modification to the type/class/source of cement, coal ash, natural pozzolan, or silica fume.
(3) Modification to the percentage of coal ash, natural pozzolan, or silica fume.
(4) Modification to a coarse aggregate size designation.
(5) Modification of the type of chemical admixture, or the incorporation or elimination, of an air-entraining admixture.
(6) Modification of coarse or fine aggregate source.

725.7 MIXING:

All proportioning/batching/mixing equipment shall comply with the standards of the Concrete Plant Manufacturer's Bureau and the certification requirements of the Arizona Rock Products Association or National Ready Mixed Concrete Association. The proportioning shall consist of combining the specified sizes of aggregates with cementitious materials, admixtures/additives, and water as herein provided. No method which may cause the segregation or degradation of materials, shall be used.

Weighing and metering devices used for the purpose of proportioning materials shall fulfill requirements as to accuracy and tolerance prescribed by the Weights and Measures Division of the State of Arizona and shall be sealed and certified in accordance with the procedures established by this agency. This certification shall not be over 12 months old and shall be renewed whenever required by the Engineer. When portable plants are set up at a new or temporary location, the scales and scale assembly shall be inspected and certificate issued regardless of the date when the scales were last tested. The Engineer may require the Contractor to run a quick scale check at any time with certified weights furnished by the Contractor and order the scale recertified if necessary.

Any admixture/additive shall be measured accurately by mechanical means into each batch by equipment or in a method pre-approved by the Engineer.

The equipment for measuring and supplying the water in the mixer shall be so constructed and arranged that the amount of water to be added to the mixture can be measured, in gallons or by weight. The amount of water shall be varied in accordance with the percentage of free moisture in the material and the requirements of the workability of the aggregate. Machine mixing will be required in all cases unless pre-approved by the Engineer. Regardless of the method employed, mixing shall be commenced as soon as possible after the cementitious material is placed in contact with the aggregates or water. All concrete mixers shall be of such design and construction, and so operated, as to provide a thoroughly and properly mixed concrete in which the ingredients are uniformly distributed.

725.7.1 Paving and Stationary Mixers: Paving and stationary mixers shall comply with the standards of the Concrete Plant Manufacturer's Bureau and the certification requirements of the Arizona Rock Products Association or the National Ready Mixed Concrete Association. Mixers shall be maintained in proper and serviceable working condition, and any part or portion thereof that is out of order, or becomes worn to such extent as to detrimentally affect the quality of mixing, shall be promptly repaired or replaced.

The proper proportions of aggregate, cementitious materials, admixtures/additives and water for each batch of concrete shall be placed in the mixer, and shall be mixed for a period of not less than 50 seconds after all such materials are in the drum.

The rotating speed at which the mixer shall be operated shall conform to that recommended by the manufacturer.

The total volume of materials mixed in any one batch shall neither exceed the water level capacity of the mixer nor the manufacturer's catalog rated capacity of the mixer.

725.7.2 Transit Mixers: Transit mixers shall meet the requirements of the Truck Mixer Manufacturer's Bureau and the certification requirements of the Arizona Rock Products Association or the National Ready Mixed Concrete Association. Ready mix concrete shall comply with ASTM C94 except as herein specified.

Each mixer and agitator shall have attached thereto in a prominent place a metal plate or plates, installed by the manufacturer, on which is plainly marked the capacity of the drum in terms of the volume of mixed concrete and the speed of rotation for the agitating and mixing speeds of the mixing drum or blades.

Each mixer shall have an identification number painted on the truck in such a location that it can be easily read from the batching platform.

The total volume of materials introduced into the mixer for mixing purposes shall not exceed the manufacturer's guaranteed mixing capacity. If the concrete so mixed does not meet the uniformity requirements of this section, the amount of materials charged into the mixer shall be reduced.

The rotation speed at which the mixer shall be operated shall conform to that recommended by the manufacturer.

Each batch of concrete placed in the mixer shall be mixed for not less than 70 nor more than 100 revolutions of the drum or blades, at the speed designated by the manufacturer of the equipment as mixing speed. Additional mixing shall be at the agitating speed designated by the manufacturer of the equipment. The revolving of the drum shall be continuous until the concrete is completely emptied from the drum. Before any portion of the materials for any batch of concrete is placed therein, the drum of the mixer shall be completely emptied of the previously mixed batch.

At the time of delivery to the job site, the Engineer shall be provided with a legible delivery ticket that shall contain the following information:

- Date and Truck Number.
- Name of the Supplier.
- Name of the Contractor.
- Specific designation of job (name and location).
- Number of cubic yards in the batch.
- Time the transit mixer is loaded.
- Amount of water added at the job site at request of receiver, and his signature or initials.
- Suppliers' mix design code number.
- Type and amount of admixture or additive that is not already included in the approved mix design, if any.
- Serial number of the ticket.

Additional water may be added on the jobsite in accordance with ASTM C94 Tolerances in Slump section to adjust slump providing the slump after such water addition does not exceed the maximum allowed by these specifications in Section 725.9

(A) (1) and that water so added is mixed into the batch for a minimum of 30 additional revolutions at mixing speed. Loss of cement mortar during discharge, which in the opinion of the Engineer would be of sufficient amount to affect the homogeneity of the concrete, shall be cause for rejection of the load. The Contractor shall be responsible for all concrete to which water is added at the job site.

725.7.3 Job Mixed Concrete: All job mixed materials and procedures shall be pre-approved by the Engineer. A prepackaged commercial product shall be used for job mixed concrete placement in accordance with the manufacturer's recommended procedure.

In lieu of the use of a prepackaged commercial product, individual ingredients for concrete placement shall be prepared in a watertight container of suitable volume in batches not to exceed 1/3 cubic yard each. Proportioning of batches shall be in accordance with the applicable required mix design in Table 725-1 and Section 725.6. All mixing shall be done prior to placement in the forms and in accordance with the following procedure:

(A) Mixing shall be done in a mechanical batch mixer of approved type.
(B) The mixer shall be rotated at a speed recommended by the manufacturer.
(C) Mixing shall continue for at least 1-1/2 minutes after all materials are in the mixer, unless a shorter time is shown to be satisfactory by the mixing uniformity tests of ASTM C94.
(D) Materials handling, batching, and mixing shall conform to the applicable provisions of ASTM C94.
(E) Suitable records shall be kept to identify the number of batches, proportions of materials used, and time and date of mixing and placement along with the approximate location in the structure.

725.7.4 Dry Batched Unmixed Concrete: All dry batched unmixed concrete materials and procedures shall be pre-approved by the Engineer. An accurate batch weight shall be provided to record the quantities of cementitious materials, aggregate, admixtures/additives, and water batched into the containers. The date of batching, the container number and the batching certificate number shall be recorded at the time of batching. Copies of the batch weight records shall be submitted to the Engineer upon request.

All dry batched unmixed concrete delivered to the job site shall be stored in containers so constructed that the cement cannot comingle with the water and aggregate within the container. Any admixture/additive added in powder form shall be added to the cement; if added in liquid form, it shall be added to the water.

The contents of the container shall be discharged into a mixer at the job site. Following discharge of the first container into the mixer, the mixer shall be operated at mixing speeds during the discharge of the remaining containers. After the contents of the last container have been discharged into the mixer, the concrete shall be mixed as specified in this specification for transit mixers, and drum or turbine type mixers.

Any spillage of cementitious materials, aggregate, water or admixtures/additives during the filling, transporting, or the

discharging of the container, shall be cause for rejection of the container or the contents of the mixer if any portion of the rejected container is discharged into the mixer.

725.7.5 Volumetric Batching and Continuous Mixing Concrete and Equipment: Volumetric-batching and continuous-mixing concrete and equipment may be utilized upon approval of the Engineer for job site concreting applications. Material handling, procedures, and operations shall be in accordance with ACI 304.6R, Guide for the use of Volumetric-Measuring and Continuous-Mixing Concrete Equipment and all concrete produced and all test performed shall be in accordance with ASTM C685, Standard Specification for Concrete Made by Volumetric Batching and Continuous Mixing. All equipment shall meet the requirements of the Volumetric Mixer Standards of the Volumetric Mixer Manufacturers Bureau and shall have a suitable copyrighted rating plate furnished by the Bureau and attached to the volumetric mixing equipment.

725.8 TESTS AND TEST METHODS:

725.8.1 Field Sampling and Tests: Concrete shall be sampled in accordance with ASTM C172 for determination of temperature, slump, unit weight and yield (when required) and air content (when required) as well as for fabrication of test cylinders for compressive strength determination at 28 days. Samples shall be of sufficient size to perform all the required tests and fabricate the necessary test cylinders but in no case less than 1 cubic foot. Concrete shall be sampled during discharge of the middle portion of the batch. At the discretion of the Engineer, a sample may be obtained at the beginning of the discharge if the properties of the concrete do not appear to be within the specification limits for slump or temperature.

All sampling and testing shall be done by a certified technician meeting the requirements of the ACI Concrete Field Testing Technician, Grade I or equivalent.

Temperature of the concrete mixture shall be determined in accordance with ASTM C1064.

Slump of the concrete mixture shall be determined in accordance with ASTM C143.

Air content of the concrete mixture (when required) shall be determined in accordance with ASTM C231 or C173, whichever is applicable.

Unit weight and yield of the concrete mixture (when required) shall be determined in accordance with ASTM C138.

All compressive strength test specimens shall be made, cured, handled, protected, and transported in accordance with the requirements of ASTM C31. The contractor shall provide and maintain for the sole use of the testing laboratory/technician adequate facilities for safe storage and proper curing of concrete test cylinders on the project site including sufficient access on weekends and holidays to allow the timely pick-up of cylinders specimens. Any and all deviations from the standard procedure of any test method shall be promptly identified and corrected. Any deviations shall be clearly noted by the testing laboratory on all written reports. Testing results obtained from non-standard testing procedures shall be considered invalid and discarded by Engineer.

Sampling and testing performed for concrete acceptance will be at the expense of the Contracting Agency. Sampling and testing for the Contractor's purposes of quality control or other needs shall be at the Contractor's expense.

725.8.2 Concrete Cylinder Test: A cylinder strength test shall be the average of the strengths of at least two 6 inch by 12 inch cylinders or at least two 4 inch by 8 inch cylinders made from the same sample of concrete and tested at 28 days. An adequate number of cylinder specimens shall be made for each 50 cubic yards or not less than each half-day's placement of each class of concrete. All specimens will be tested in a laboratory approved by the Engineer in accordance with ASTM C39 for concrete acceptance. Should an individual cylinder show evidence of improper sampling, molding, curing, or testing, the results shall be discarded and the compressive strength shall be the result of the average of the remaining cylinder(s). Additional cylinder specimens may be made and tested at other ages to obtain additional compressive strength information and shall not be considered as acceptance tests. Cylinder testing performed for concrete acceptance will be at the expense of the Contracting Agency. Cylinder testing for the Contractor's purposes of quality control or other needs shall be at the Contractor's expense.

725.8.3 Additional Concrete Testing: If the 28-day strength test does not meet the compressive strength requirements, additional concrete testing may be performed to further evaluate the concrete in question for purposes of acceptability or

payment. This may involve testing of additional cylinders at later ages, (for example - hold cylinders at 56 days or more), or core testing to determine in-place concrete strengths. This additional testing and all coring repairs shall be pre-approved by the Engineer and at the expense of the Contractor. If core testing is performed, at least three representative cores shall be obtained, conditioned and tested in accordance with ASTM C42 from each concrete member or area of concrete to be tested at locations designated by the Engineer. Cores damaged subsequent to or during removal shall be rejected and additional core samples taken. Cores shall be obtained and delivered to a laboratory acceptable to the Engineer in time to allow complete strength testing within 48 days of original concrete placement. The Contractor may elect to have a representative present during sampling and testing. A core strength test shall be the average of the results of the three cores. Should an individual core show evidence of improper sampling, curing, or testing, the results shall be discarded and the compressive strength shall be the result of the average of the remaining core(s). Results of the core strength testing shall replace the results of the cylinder strength test for that sample.

725.9 ACCEPTANCE:

(A) Plastic Concrete Properties:

(1) The slump of the concrete shall meet the requirements of ASTM C94 Tolerances in Slump section. When the approved mix design or project specification requirements for slump are a "maximum" or "not to exceed", the following tolerances apply:

Specified slump:	If 3" or less	If more than 3"
Plus tolerance	0 inch	0 inch
Minus tolerance	1 1/2 inch	2 1/2 inch

When the approved mix design or project specification requirements for slump are not written as a "maximum" or "not to exceed," the following tolerances apply:

For design slump of:	Tolerance
2 inch and less	+/- 1/2 inch
More than 2 through 4 inch	+/- 1 inch
More than 4 inch	+/- 1 1/2 inch

(2) Limit the maximum allowable temperature of the concrete mixture immediately before placement to 95°F unless otherwise specified or unless a higher allowable temperature is pre-approved by the Engineer. At the discretion of the Engineer, recommended practices in ACI 305, Specification for Hot Weather Concreting, can provide good reference information and may be used to modify maximum allowable concrete temperature and acceptance.

Per ACI 306, Specification for Cold Weather Concreting, when the atmospheric temperature at the time of placing concrete is above 30°F the temperature of the concrete, as placed, shall not be less than 60°F. When the atmospheric temperature at the time of placing concrete is between 0°F and 30°F the temperature of the concrete, as placed, shall not be less than 65°F.

(3) Air entrained concrete shall meet the requirements of ASTM C94 Air-Entrained Concrete section. The air content of air-entrained concrete when sampled from the transportation unit at the point of discharge shall be within the approved mix design tolerance or +/- 1.5 % of the specified value. When a representative sample taken prior to discharge shows an air content below the specified level by more than the allowable tolerance, additional air entraining admixture shall be added to the concrete mix to achieve the desired air content level, followed by a minimum of 30 revolutions at mixing speed.

(4) Per ASTM C94 Mixing and Delivery section, discharge of the concrete shall be completed within 1 1/2 hours (90 minutes) after the introduction of the mixing water to the cementitious materials or the introduction of the cementitious materials to the aggregates. The Engineer may allow the continuation of concrete placement after the 1 1/2 hours (90 minutes) time limit has been reached if the concrete is of such slump or workability that it can be placed without the addition of water to the batch. The 1 1/2 hours (90 minutes) time limit may also be waived if the mix design incorporates a hydration stabilizing admixture at the sufficient dosage to slow down hydration in order to permit additional transit/placement time. The dosage and associated additional time shall be noted on the delivery ticket. The additional

discharge time shall not exceed the maximum additional time based on the dosage noted on the approved mix design or delivery ticket. It is the Contractor's responsibility to obtain approval for additional discharge time from the Engineer prior to concrete placement.

Any concrete failing to meet the tolerances for plastic concrete properties in 725.9 (A) (1) through (4) shall be reviewed by the Engineer and is subject to rejection.

(B) Hardened Concrete Properties – Compressive Strength:

Compressive strength of concrete shall be determined on the basis of cylinder strength tests obtained in accordance with Section 725.8.2 and shall be acceptable if the tests meet or exceed the minimum specified strength. When the validity of cylinder strength tests are suspect, the strength of concrete in question shall be determined in accordance with Section 725.8.3.

When compressive strength test results are less than the specified minimum, an Engineering Analysis to determine the impact of the strength reduction may be required by the Engineer prior to the decision to accept or reject the concrete. The Engineering Analysis will be at the Contractor's expense. Any concrete that is rejected by the Engineer shall be removed and replaced by the Contractor at the Contractor's expense.

When concrete is accepted by the Engineer on the basis of test results of less than 100% of the required minimum compressive strength, an adjustment in the concrete unit price may be made for the quantity of concrete represented by such strength tests in accordance with Table 725-3.

TABLE 725-3

Adjustment in Concrete Unit Price Based on Strength Deficiency

Class AA and Class A		Class B and Class C	
Percent of Specified Minimum 28-day Compressive Strength Attained (Nearest 1%)	Percent of Concrete Unit Price Allowed	Percent of Specified Minimum 28-day Compressive Strength Attained (Nearest 1%)	Percent of Concrete Unit Price Allowed
100% or greater	100	100% or greater	100
98-99	90	95-99	95
96-97	85	90-94	90
95	80	85-89	85

- End of Section -

SECTION 726

CONCRETE CURING MATERIALS

726.1 GENERAL:

Curing materials shall consist of curing paper, polyethylene film or liquid membrane-forming compounds which, when applied to fresh concrete, will inhibit moisture loss and reduce temperature rise during the curing period. All curing materials and methods shall be approved by the Engineer prior to use. Wet coverings such as burlap, cotton mats, or other moisture-retaining fabrics also may be used, or may be required by special provisions.

726.2 MATERIALS:

(A) Curing paper, or polyethylene film, shall conform ASTM C171.

(B) Liquid membrane-forming compounds shall conform ASTM C309. Type 1 compound with either a Class A or Class B vehicle shall be used for concrete structures, except bridge decks, approach slabs, and Portland cement concrete pavement. Type 2 white pigmented compound, with either a Class A or Class B vehicle shall be used for Portland cement concrete pavement, bridge decks and approach slabs.

(C) Burlap cloth made from jute or kenaf shall conform to AASHTO M-182.

- ***End of Section*** -

SECTION 727

STEEL REINFORCEMENT

727.1 GENERAL:

The following specifications set forth the requirements for bar reinforcement, wire reinforcement, and wire mesh reinforcement. The reinforcement shall conform accurately to the dimensions and details indicated on the plans or otherwise prescribed and before being placed in any concrete work, shall be thoroughly cleaned of all loose rust, mill scale, mortar, oil, dirt, or coating of any character, which would be likely to destroy, reduce, or impair its proper binding with the concrete.

No reinforcing steel will be accepted under this specification until it has been approved by the Engineer. When required by the Engineer, the Contractor or supplier shall furnish a spot sample taken on the project and notify the Engineer as to when and where they will be available. Such samples shall be furnished at the expense of the Contractor or supplier, but the cost of any testing that may be required will be borne by the Contracting Agency. Samples shall only be taken in the presence of the Engineer. The Contractor shall furnish three certified mill test reports or a Certificate of Compliance for each heat or size of steel, which can be clearly identified with the lot. When such information has been furnished, placing of the steel will not be held up until results of spot samples have been received. Unless otherwise specified, all reinforcing steel bars shall be deformed intermediate grade 40 billet steel in conformance to ASTM A615.

In testing bar reinforcement, only the theoretical cross-sectional area will be used in all computations.

Reinforcing steel shall be furnished in the sizes, shapes, and lengths shown on the plans. Bending of steel shall conform to the requirements of Section 505.5.2.

The various grades of steel shall not be used interchangeably in structures.

727.2 WIRE REINFORCEMENT:

Wire reinforcement shall in all respects fulfill requirements prescribed in ASTM A1064.

727.3 WELDED WIRE REINFORCEMENT:

Welded wire reinforcement shall conform to ASTM A1064. The wire size number and the wire spacing will be specified in the special provisions or shown on the plans. The welded wire reinforcement shall be so constructed as to retain its original shape and form during necessary handling. The effective cross-sectional area of the metal shall be equal to that specified or indicated on the plans.

727.4 WIRE TIES:

Wire for ties shall be black, annealed, and not lighter than 16 gage.

- End of Section -

SECTION 729

EXPANSION JOINT FILLER

729.1 PREMOLDED JOINT FILLER:

Expansion joint filler materials shall consist of preformed strips of a durable resilient compound and comply with one of the following as specified by the Contracting Agency or as approved by the Engineer.

(a) ASTM D1751 – Performed Expansion Joint Filler for Concrete Paving and Structural Construction (Nonextruding and Resilient Bituminous Types)
(b) ASTM D8139 – Semi-Rigid, Closed-Cell Polypropylene Foam, Preformed Expansion Joint Fillers for Concrete Paving and Structural Construction
(c) ASTM D1752 – Preformed Sponge Rubber Cork and Recycled PVC Expansion Joint Fillers for Concrete Paving and Structural Construction
(d) ASTM D2628 – Preformed Polychloroprene Elastomeric Joint Seals for Concrete Pavements.

729.2 POUR TYPE JOINT FILLERS FOR PORTLAND CEMENT CONCRETE PAVING (PCCP):

Pour type joint fillers shall comply with ASTM D3406 or as approved by the Engineer. Joint sealant shall not contain any coal tar materials. The following requirement shall be added to paragraphs 7.1 of ASTM D3406: The minimum ambient temperature during application and ambient temperatures under various storage conditions shall be clearly marked on the container.

729.3 TEST REPORT AND SHIPMENT CERTIFICATE:

When requested by the Engineer, each shipment shall be accompanied by a Certificate of Compliance that the material complies with the above specifications.

- ***End of Section -***

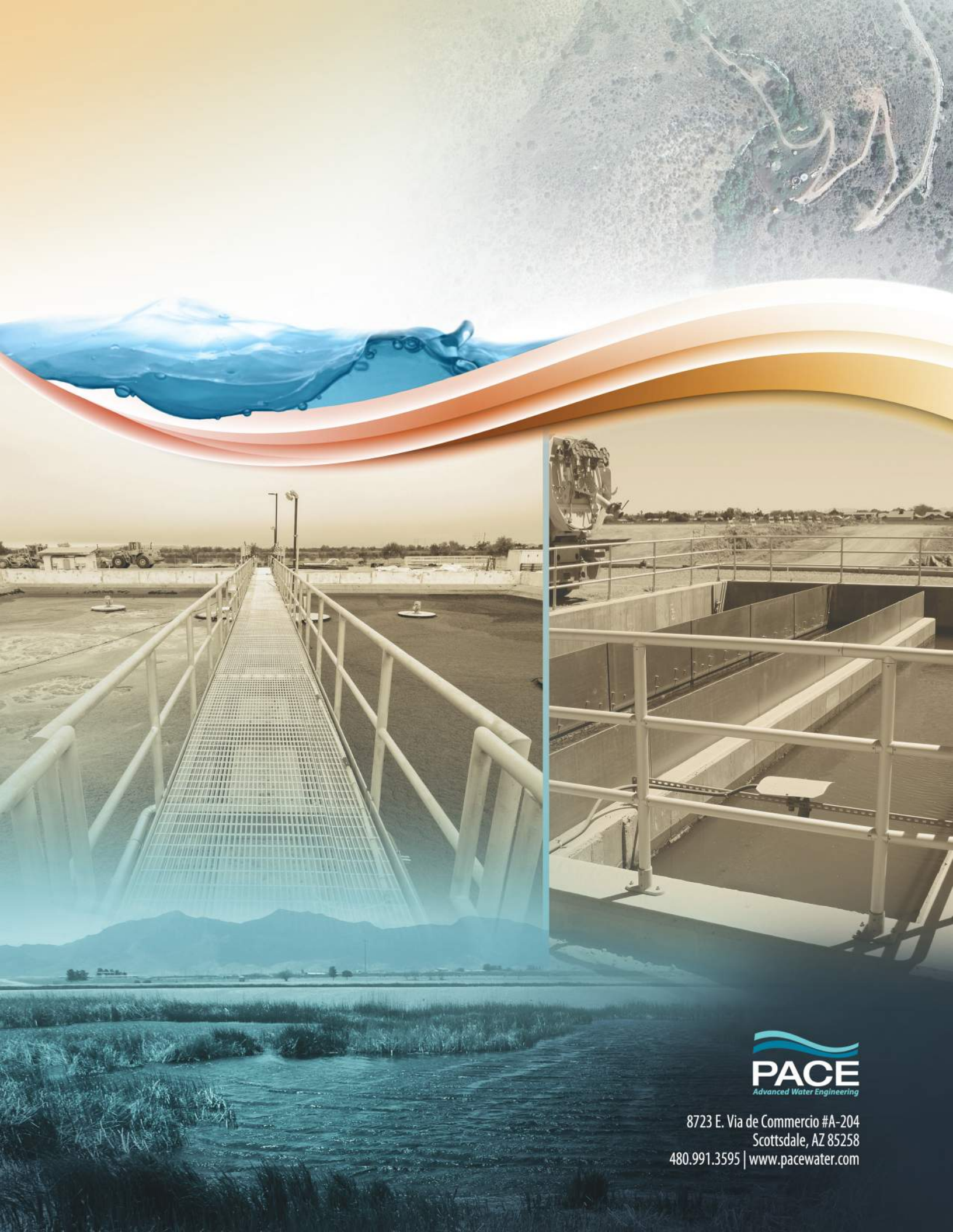

PACE
Advanced Water Engineering

8723 E. Via de Commercio #A-204
Scottsdale, AZ 85258
480.991.3595 | www.pacewater.com

TOWN OF JEROME

YAVAPAI COUNTY, ARIZONA

WASTEWATER TREATMENT PLANT

100% ISSUED FOR BID

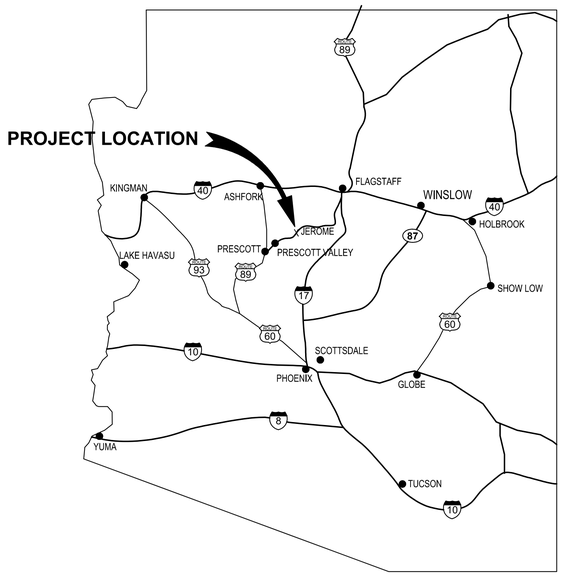

LOCATION MAP

N.T.S.

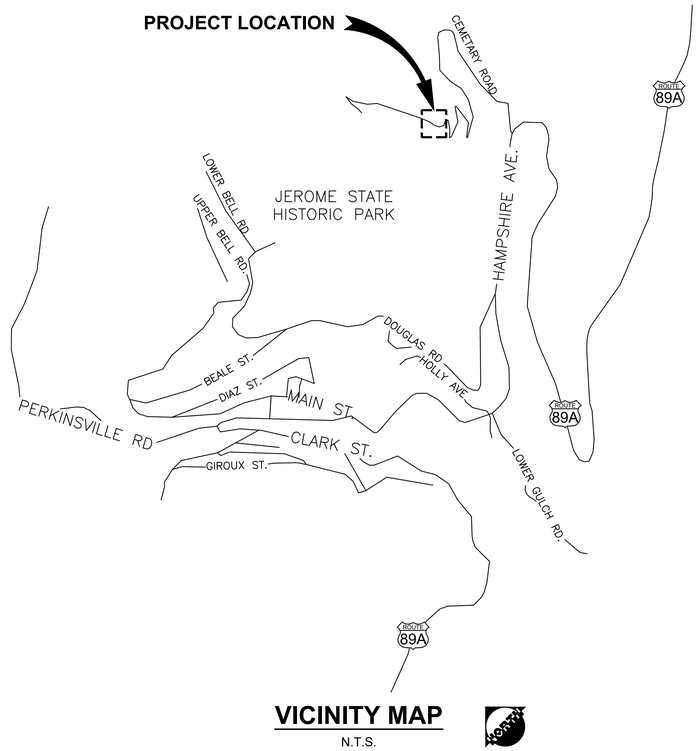

VICINITY MAP

N.T.S.

SURVEY DETAILS:

1. COORDINATES WERE VERIFIED IN THE FIELD USING REAL TIME KINEMATIC GPS OBSERVATIONS RELATIVE TO PUBLISHED CONTROL POINTS.
2. SURVEYED DURING THE MONTH OF DECEMBER 2022.
3. CONTRACTOR SHALL VERIFY HORIZONTAL AND VERTICAL CONTROLS IN THE FIELD PRIOR TO CONSTRUCTION.
4. PROJECT METADATA:
   - UNITS:
     COORDINATES, DISTANCE AND ELEVATIONS ARE SHOWN IN INTERNATIONAL FEET.
   - HORIZONTAL DATUM (BASIS OF BEARINGS):
     NAD83 (2011 Epoch) ARIZONA CENTRAL ZONE
   - VERTICAL DATUM:
     NAVD '88
   - PROJECT BENCHMARK:
     POINT NUMBER 1
     PRIMARY BENCHMARK DESCRIBED AS: SET 1/2" REBAR
     SET REBAR WITH OPUS PROCESSED SOLUTION:
     GRID NORTHING = 1365466.36
     GRID EASTING = 643466.42
     OPUS ELEVATION = 4827.11
5. THE COORDINATES PRESENTED ARE SHOWN TO THREE DECIMAL PLACES FOR CALCULATION PURPOSES AND ARE NOT REPRESENTATIVE OF THE PRECISION OF THE SURVEY MEASUREMENTS.
6. THIS NOT A PROPERTY BOUNDARY SURVEY.

PROJECT ADDRESS:

TOWN OF JEROME WASTEWATER TREATMENT PLANT
SEWER PLANT ROAD
JEROME, AZ 86331

PRINCIPAL OWNER:

TOWN OF JEROME
600 CLARK STREET, P.O. BOX 335
JEROME, AZ 86331

GEODETIC CONTROL:

PT	NORTHING	EASTING	ELEVATION
1	1365466.36	643466.42	4827.11
2	1365826.06	643587.50	4801.17
3	1365527.64	643545.12	4815.50
4	1364201.32	642110.19	4832.28
5	1364259.41	642191.45	4827.73
6	1365024.28	642592.65	4654.33

CONSULTANTS:

ENGINEER OF RECORD

PACIFIC ADVANCED CIVIL ENGINEERING (PACE)
8723 E. VIA de COMMERCIO, #A204
SCOTTSDALE, AZ 85258
BUSINESS LICENSE NO. 1006013
(480) 991-3595
CONTACT: TAYLOR PIERCE, P.E.
CONTACT: MIKE KREBS, P.E.

CIVIL ENGINEER
SEC ENGINEERING
825 COVE PARKWAY
COTTONWOOD, AZ 86326
(928) 282-7787
CONTACT: KRISHAN GINIGE

STRUCTURAL ENGINEER:
PK ASSOCIATES
6900 E. BELLEVIEW AVENUE, SUITE 200
GREENWOOD VILLAGE, CO 80111
(720) 799-1053
CONTACT: JAMES APPLEYARD

ELECTRICAL ENGINEER:
WRIGHT ENGINEERING
165 E. CHILTON DRIVE
CHANDLER, AZ 85225
(480) 497-5829
CONTACT: JACOB BIELEFELDT

FINAL DESIGN APPROVAL:

BY: Brett Kai DATE: 4/21/2026
TOWN MANAGER
THE TOWN APPROVES THESE PLANS FOR CONCEPT ONLY AND IS NOT LIABLE FOR ERRORS OR OMISSIONS

RECORD DRAWING:

THESE RECORD DRAWINGS HAVE BEEN PREPARED BASED ON INFORMATION PROVIDED BY THE CONSTRUCTION CONTRACTOR. THE ENGINEER HAS INSPECTED THE COMPLETED FACILITIES AND CERTIFIES THAT THEY ARE A SUBSTANTIALLY ACCURATE PRESENTATION OF THE LAYOUT AND CONDITION OF THE CONSTRUCTED PROJECT.

NAME _____(SEAL)
REGISTRATION NO. _____ DATE _____
REVD. BY: _____
FIELD ENGINEERING

100% ISSUED FOR BID

PREPARED BY: TAYLOR B. PIERCE R.C.E 70097 DATE

PACE
Advanced Water Engineering
8723 E. VIA de COMMERCIO, SUITE A, SCOTTSDALE, CA 85258
P. (480) 991-3595 | www.pacewater.com

NO	BY	DATE	REVISIONS	DATE	APP.

Registered Professional Engineer (Civil)
CERTIFICATE NO. 70097
Signed
TAYLOR B. PIERCE
ARIZONA, U.S.A.
Expires 12/31/28

PREPARED BY: PACE
DESIGNED BY: NE
DRAWN BY: DS, WW
CHECKED BY: TP
SCALE: AS NOTED
DATE: NOV 2025
JOB NO. B614

TITLE: TITLE SHEET

JOB: TOWN OF JEROME WASTEWATER TREATMENT PLANT — YAVAPAI CO. AZ

SHEET
G1.0
1 OF 99 SHEETS

JOB NO. B614

THESE DRAWINGS ARE THE PROPERTY OF P.A.C.E. AND SHALL NOT BE REPRODUCED IN ANY MANNER NOR BE USED FOR CONSTRUCTION UNLESS STAMPED 'ISSUED FOR CONSTRUCTION'.

W:\B614\Engineering\B614-30\sheets\B614 - G1.0 TITLE SHEET.dwg - Tab: G1.0 - by nsddrgton on 04/21/26 at 12:17:57 PM

SHEET INDEX

DWG No.	SHT No.	TITLE
GENERAL		
1	G1.0	TITLE SHEET
2	G1.1	SHEET INDEX
3	G2.0	GENERAL NOTES AND ABBREVIATIONS
4	G3.0	HYDRAULIC PROFILE
5	G3.1	HYDRAULIC PROFILE
6	G3.2	PROCESS FLOW DIAGRAM
CIVIL		
7	C-1.0	NOTES
8	C-1.1	NOTES 2, LEGENDS, ABBREVIATIONS
9	C-1.2	TYPICAL SECTIONS
10	C-2.0	GRADING SITE MAP, SURVEY CONTROL
11	C-2.1	WWTP SITE GRADING-10SC
12	C-2.2	NORTH DR IMPROVEMENTS
13	C-2.3	WWTP ACCESS RD P&P 25+00+TO 30+00
14	C-2.4	WWTP ACCESS RD P&P 30+00 TO 35+00
15	C-2.5	WWTP ACCESS RD P&P 35+00 TO 37+50
16	C-2.6	WWTP ACCESS RD P&P 37+50 TO 39+75
17	C-2.7	NEW SEWER ACCESS ROAD
18	C-3.0	NEW SEWER SITE MAP, SURVEY CONTROL
19	C-3.1	NEW SEWER P&P
20	C-4.0	ALT SEWER SITE MAP, SURVEY CONTROL
21	C-4.1	ALT SEWER P&P 10+00 TO 15+25
22	C-4.2	ALT SEWER P&P 15+25 TO 20+50
23	C-4.3	ALT SEWER P&P 15+25 TO 20+50
24	C-4.4	ALT SEWER WEST TURNAROUND
25	C-4.5	ALT SEWER LATERAL PROFILES
MECHCANICAL		
26	M1.0	EXISTING SITE PLAN
27	M1.1	DEMOLITION PLAN PH-I
28	M1.2	DEMOLITION PLAN PH-II
29	M2.0	PROPOSED SITE PLAN
30	M2.1	YARD PIPING & GRADING PLAN
31	M2.2	YARD PIPING
32	M2.3	YARD PIPING
33	M2.4	YARD PIPING
34	M2.5	PLAN & PROFILE
35	M3.0	SBR MECHANICAL PLAN
36	M3.1	SBR MECHANICAL PLAN
37	M3.2	SBR MECHANICAL SECTIONS
38	M4.0	DEWATERING & CCC MECH PLAN
39	M4.1	CHLORINE CONTACT BASIN SECTION
40	M4.2	DEWATERING SECTION
41	M5.0	SLUDGE DRYING BEDS PLAN
42	M5.1	SLUDGE DRYING BEDS SECTIONS
43	M5.2	DRYING BED LIFT STATION SECTIONS
44	M6.0	EMERGENCY OVERFLOW BASIN PLAN AND SECTIONS
45	M7.0	BLOWER OPS PLAN
46	M8.0	MECHANICAL DETAILS I
47	M8.1	MECHANICAL DETAILS II
48	M8.2	MECHANICAL DETAILS III
49	M8.3	MECHANICAL DETAILS IV
50	M8.4	MECHANICAL DETAILS V
51	M8.5	MECHANICAL DETAILS VI
STRUCTURAL		
52	S1.1	GENERAL STRUCTURAL NOTES
53	S1.2	GENERAL STRUCTURAL NOTES
54	S1.3	TYPICAL DETAILS
55	S1.4	TYPICAL DETAILS
56	S1.5	TYPICAL DETAILS
57	S1.6	TYPICAL DETAILS
58	S1.7	TYPICAL DETAILS
59	S2.0	FOUNDATION PLAN
60	S2.01	FRAMING PLAN
61	S2.10	FRAMING PLAN
62	S3.1	FOUNDATION DETAILS
63	S3.2	FOUNDATION DETAILS
64	S3.3	FOUNDATION DETAILS
65	S4.1	FRAMING DETAILS
66	S4.2	FRAMING DETAILS

ARCHITECTURAL		
67	A1.0	BLOWER OPS ARCH PLAN
68	A2.0	BLOWER OPS ARCH REFLECTED CEILING PLAN
69	A3.0	BLOWER OPS ARCH SEWER & PLUMBING PLAN
70	A4.0	BLOWER OPS ARCH ELEVATIONS & SECTIONS
ELECTRICAL		
71	E1.1	ELECTRICAL COVER SHEET
72	E1.2	ELECTRICAL LEGEND
73	E2.1	SINGLE LINE DIAGRAM I
74	E2.2	SINGLE LINE DIAGRAM II
75	E2.3	LOAD CALCULATIONS
76	E2.4	WIRE & COND TABLES I
77	E2.5	WIRE & COND TABLES II
78	E3.1	ELECTRICAL PROPOSED SITE PLAN
79	E3.2	ELECTRICAL SBR PLAN
80	E3.3	ELECTRICAL DEWATERING PAD
81	E3.4	ELECTRICAL BLOWER OPS
82	E3.5	ELECTRICAL DRYING BED LIFT STATION
83	E3.6	ELECTRICAL OVERFLOW BASIN
84	E4.1	ELECTRICAL DETAILS I
85	E4.2	ELECTRICAL DETAILS II
86	E4.3	ELECTRICAL DETAILS III
87	E4.4	ELECTRICAL DETAILS IV
88	E4.5	ELECTRICAL DETAILS V
89	E4.6	ELECTRICAL DETAILS VI
90	E5.1	ELECTRICAL SCHEMATICS I
91	E5.2	ELECTRICAL SCHEMATICS II
92	E5.3	ELECTRICAL SCHEMATICS III
P&ID		
93	I0.0	P&ID GENERAL NOTES
94	I1.0	HEADWORKS
95	I1.1	SEQUENCING BATCH REACTOR
96	I1.2	CHLORINE CONTACT & DIGESTER
97	I1.3	BLOWER ROOM
98	I1.4	DEWATERING & LIFT STATIONS
99	I1.5	GENERATOR

LEGEND

- ASPHALT
- DECOMPOSED GRAVEL FILL
- CONCRETE
- SAND
- BACKFILL
- ENGINEERED BACKFILL
- DEMO
- EXISTING 1' CONTOUR
- CONSTRUCTION NOTES INCL. FITTINGS, VALVES & MISC. EQUIPMENT (SEE THE SAME SHT.)
- THRUST BLOCK
- EQUIPMENT

ABBREVIATIONS

AB	AGGREGATE BASE
AC	ASPHALT CONCRETE
A/C	AIR CONDITIONER
ADF	AVERAGE DAY FLOW
APPROX	APPROXIMATELY
ARCH	ARCHITECTURAL
ARV	AIR RELEASE VALVE
AUTO	AUTOMATIC
AUX	AUXILIARY
AVV	AIR VACUUM VALVE
AWS	ALARM WATER SURFACE
BO	BLOWOFF
BC	BEGINNING OF CURVE
BF	BLIND FLANGE
BLDG	BUILDING
BM	BEAM, BENCHMARK
BOD	BIOCHEMICAL OXYGEN DEMAND
BOS	BOTTOM OF SURFACE
BOT	BOTTOM
BVC	BEGIN VERTICAL CURVE
CATV	CABLE TELEVISION
CFH	CUBIC FOOT PER HOUR
CFM	CUBIC FOOT PER MINUTE
CFS	CUBIC FOOT PER SECOND
CH	CHUCK
CMU	CONCRETE MASONRY UNIT
CO	CLEANOUT
COTG	CLEANOUT TO GRADE
CONST	CONSTRUCTION
CPLG	COUPLING
CPVC	CHLORINATED POLYVINYL CHLORIDE
CTR	CENTER
CV	CHECK VALVE
CW	COLD WATER
CYL	CYLINDER
D	DRAIN
DAF	DISSOLVED AIR FLOATATION
DI	DROP INLET
DIA	DIAMETER
DIP	DUCTILE IRON PIPE
DO	DISSOLVED OXYGEN
DTL	DETAILS
DWG	DRAWING
E	ELECTRICAL
EA	EACH
EC	END OF CURVE
ECC	ECCENTRIC
EF	EACH FACE
EFF	EFFLUENT
EL	ELEVATION
EP	EDGE OF PAVEMENT
EQUIP	EQUIPMENT
EW	EACH WAY
EXH	EXHAUST
EX	EXISTING
FC	FLEXIBLE COUPLING
FD	FLOOR DRAIN
FF	FINISHED FLOOR
FG	FINISHED GROUND
FH	FIRE HYDRANT
FL	FLOW LINE
FLEX	FLEXIBLE
FLG	FLANGE
FM	FORCE MAIN
FPS	FEET PER SECOND
FS	FINISHED SLAB
FT	FEET
FUT	FUTURE
G	GAS
GA	GAUGE
GAL	GALLONS
GALV	GALVANIZED
GB	GRADE BREAK
GPD	GALLONS PER DAY
GPM	GALLONS PER MINUTE
H/A	HAND AUTOMATIC
HDPE	HIGH DENSITY POLYETHYLENE
HOA	HAND-OFF-AUTOMATIC
HORIZ	HORIZONTAL
HP	HIGH POINT
HWL	HIGH WATER LEVEL
HWS	HIGH WATER SURFACE
HZ	HERTZ
ID	INSIDE DIAMETER
I&C	INSTRUMENTATION & CONTROLS INTEGRATOR
IN	INCHES
INF	INFLUENT
IRR	IRRIGATION
INV	INVERT
JB	JUNCTION BOX
LBS	POUNDS
LBS/D	POUNDS PER DAY
LF	LINEAR FEET
LP	LOW PRESSURE
LWL	LOW WATER LEVEL
LWS	LOW WATER SURFACE
MAX	MAXIMUM
MCC	MOTOR CONTROL CENTER
MECH	MECHANICAL
MFR	MANUFACTURER
MGD	MILLION GALLONS PER DAY
MG/L	MILLIGRAMS PER LITER
MH	MANHOLE OR MAINTENANCE HOLE
MIN	MINIMUM, MINUTE
MISC	MISCELLANEOUS
MJ	MECHANICAL JOINT
MLSS	MIXED LIQUOR SUSPENDED SOLIDS
MMADF	MAX MONTH AVERAGE DAY FLOW
N	NORTHING
N/C	NORMALLY CLOSED
N/O	NORMALLY OPEN
NTS	NOT TO SCALE
NWL	NORMAL WATER LEVEL
NPSH	NET POSITIVE SUCTION HEAD
OC	ON CENTER
OD	OUTSIDE DIAMETER
PG	PRESSURE GAUGE
PI	POINT OF INTERSECTION
PO	PUSH ON
PP	POWER POLE, PIPE PENETRATION
PRFV	PRESSURE RELIEF VALVE
PRC	POINT OF REVERSE CURVE
PRV	PRESSURE REGULATING (REDUCING) VALVE
PS	PRESSURE SWITCH, PIPE SUPPORT
PSI	POUNDS PER SQUARE INCH
PV	PLUG VALVE
PVC	POLYVINYL CHLORIDE
PVMT	PAVEMENT
PW	POTABLE WATER
R	RADIUS
RAS	RETURN ACTIVATED SLUDGE
RED	REDUCER
REQ'D	REQUIRED
RPM	REVOLUTIONS PER MINUTE
RQMT	REQUIREMENT
R&R	REMOVE AND RELOCATE (REINSTALL)
R&S	REMOVE AND SAVE (SALVAGE)
R/W	RIGHT OF WAY
R&W	REMOVE AND WASTE
RW	RECLAIMED WATER
S	SLOPE
SS	SANITARY SEWER
SSMH	SANITARY SEWER MANHOLE
SBR	SEQUENCING BATCH REACTOR
SD	STORM DRAIN
SE	SECONDARY EFFLUENT
SEC	SECTION
SHT	SHEET
SOV	SHUT OFF VALVE
SPEC	SPECIFICATION
SQ	SQUARE
SS	STAINLESS STEEL
ST	STREET
STA	STATION
T&B	TOP AND BOTTOM
TB	THRUST BLOCK
TBA	TO BE ABANDONED
TDH	TOTAL DYNAMIC HEAD
TEL	TELEPHONE
TEMP	TEMPERATURE
TOS	TOP OF SLAB
TOW	TOP OF WALL
TYP	TYPICAL
UNO	UNLESS NOTED OTHERWISE
VAC	VOLTS ALTERNATING CURRENT
VDC	VOLTS DIRECT CURRENT
VERT	VERTICAL
VCP	VITRIFIED CLAY PIPE
W	WATER
WAS	WASTE ACTIVATED SLUDGE
W/O	WITHOUT
WS	WATER SURFACE

100% ISSUED FOR BID

NO	BY	DATE	REVISIONS	DATE	APP.

Registered Professional Engineer (Civil) CERTIFICATE NO. 70097 Timothy B. Pierce Signed ARIZONA, U.S.A. Expires 12/31/28

THESE DRAWINGS ARE THE PROPERTY OF P.A.C.E. AND SHALL NOT BE REPRODUCED IN ANY MANNER NOR BE USED FOR CONSTRUCTION UNLESS STAMPED 'ISSUED FOR CONSTRUCTION'.

PREPARED BY: PACE
DESIGNED BY: NE
DRAWN BY: DS, WW
CHECKED BY: TP
SCALE: AS NOTED
DATE: NOV 2025
JOB NO.: B614

TITLE: SHEET INDEX

JOB: TOWN OF JEROME WASTEWATER TREATMENT PLANT — YAVAPAI CO. AZ

PREPARED BY: TAYLOR B. PIERCE R.C.E 70097 DATE
PACE Advanced Water Engineering
8723 E. Via de Ventura Suite A-144 Scottsdale, CA 85258
P: (480) 991-3395 | www.pacewater.com

SHEET G1.1
2 OF 99 SHEETS

JOB NO. B614

W:\B614\Engineering\B614-30\sheets\B614 - G1.0 TITLE SHEET.dwg - Tab: G1.1 - by reddington on 04/21/26 at 12:17:57 PM

GENERAL NOTES:

1. ALL PAVING, GRADING, PIPING, AND UTILITY LINE CONSTRUCTION WORK WITHIN THE PUBLIC RIGHT OF WAY, ON PRIVATE STREETS, ACCESS WAYS, LOT GRADING, MATERIALS, AND WORKMANSHIP SHALL COMPLY WITH TOWN OF JEROME ENGINEERING STANDARDS AND SPECIFICATIONS, AND SHALL CONFORM TO THE LATEST MARICOPA ASSOCIATION OF GOVERNMENTS (MAG) AND A.D.O.T. STANDARD DETAILS AND SPECIFICATIONS. GRADING WORK SHALL CONFORM TO MAG SPECIFICATIONS, THE SOILS REPORT, AND CHAPTER 70 ENTITLED "EXCAVATION AND GRADING" OF THE UNIFORM BUILDING CODE (UBC) LATEST EDITION, SUBSECTIONS 7001 TO 7005, 7009 TO 7013, FIGURES 70-1 AND 70-2 AND AS STATED THEREIN. LOCAL MUNICIPAL STANDARD DETAILS WILL CONTINUE TO APPLY WHERE NOT ADOPTED OR INCLUDED BY MAG. THE FOLLOWING NOTES AND SPECIFICATIONS ARE HEREBY MADE A PART OF THE CONTRACT DOCUMENTS AND PROJECT SPECIFICATIONS. WHERE THERE EXISTS A CONFLICT BETWEEN THESE NOTES, MAG SPECS, UBC, THE SOILS REPORT, OR THE PROJECT SPECIFICATIONS, THE MORE STRINGENT OF THE REQUIREMENTS SHALL GOVERN UNLESS PRIOR CLARIFICATION FROM THE ENGINEER HAS BEEN GIVEN IN WRITING TO THE CONTRACTOR. THE CONTRACTOR AS STATED HEREIN SHALL MEAN THE GENERAL CONTRACTOR AND HIS ASSOCIATED SUBCONTRACTORS. THE GENERAL CONTRACTOR IS RESPONSIBLE FOR THE COORDINATION AND PERFORMANCE OF THE WORK OF ALL HIS SUBCONTRACTORS AND SUPPLIERS.
2. ALL WORK SHALL BE BID AND INSTALLED BY THE CONTRACTOR COMPLETE AND OPERATIONAL TO LINES, GRADES, AND FUNCTIONS INDICATED ON ALL PLANS AND SPECIFICATIONS. THE CONTRACTOR SHALL PROVIDE ALL LABOR, MATERIALS, EQUIPMENT, AND SERVICES NECESSARY TO COMPLETE ALL PROJECT EARTHWORK AND SITE WORK INCLUDING BUT NOT LIMITED TO: SITE CLEARING, GRUBBING, DEMOLITION, DEBRIS REMOVALS FROM THE SITE, IMPORT AND/OR EXPORT OF SOILS AND OTHER MATERIALS TO AND FROM THE SITE, BORROW MATERIALS, TEMPORARY SOILS MATERIAL STOCKPILING, BACKFILL OF ONSITE BORROW PITS, MOVING OF MATERIALS, CUT AND FILL, SLOPES, SOILS AND BANK STABILIZATION AND PROTECTION, BERMING, ROADWAY EXCAVATIONS, RELOCATIONS, STRUCTURE EXCAVATIONS, TRENCHING, ALL BACKFILLING, SITE GRADING, PAVING, PIPING, UTILITY LINE AND STORM DRAINAGE CONSTRUCTION, CURBS, SITE CONCRETE WORK AND OTHER MISCELLANEOUS SITE WORK STRUCTURES AND ITEMS INDICATED ON THE PLANS AND IN THE CONTRACT DOCUMENTS.
3. ANY QUANTITIES SHOWN ON PLANS ARE NOT VERIFIED BY THE ENGINEER. QUANTITIES ARE APPROXIMATE ONLY AND INTENDED AS A GUIDE FOR ESTIMATING PURPOSES. THE CONTRACTOR IS RESPONSIBLE FOR PROVIDING HIS OWN QUANTITY TAKE OFFS. THE CONTRACTOR SHALL VISIT THE SITE AND REVIEW THE SOILS CONDITIONS AND THE SOILS REPORT WITH THE PROJECT SOILS ENGINEER PRIOR TO BIDDING THIS PROJECT. ANY DISCREPANCIES IN SITE MATERIALS SHALL BE BROUGHT TO THE ATTENTION OF THE DESIGN ENGINEER 7 DAYS MINIMUM PRIOR TO BIDDING FOR REVIEW. ALL SHRINK OF EARTH MATERIAL OR EXCESS MATERIAL FROM UTILITY TRENCHES AND FOUNDATIONS SHALL BE INCLUDED IN THE CONTRACTOR'S BID.
4. THE ENGINEER WILL NOT BE RESPONSIBLE FOR CONSTRUCTION MEANS, METHODS, TECHNIQUES, SEQUENCES, OR PROCEDURES OR FOR SAFETY PRECAUTIONS OR PROGRAMS UTILIZED IN CONNECTION WITH THE WORK, AND HE WILL NOT BE RESPONSIBLE FOR THE CONTRACTOR'S FAILURE TO CARRY OUT THE WORK IN ACCORDANCE WITH THE CONTRACT DOCUMENTS.
5. THE CONTRACTOR SHALL BE RESPONSIBLE FOR VERIFYING THE LIMITS OF THE WORK AREA FOR ALL PHASES OF THE WORK PRIOR TO BEGINNING CONSTRUCTION OF THOSE PHASES. ALL CONSTRUCTION LIMITS, AREAS OF WORK, SETBACKS, PERIMETERS, ADJACENT PROPERTY LINES, BOUNDARIES, AND OTHER CRITERIA DEFINING THE LIMITS OF THE CONTRACTOR'S WORK AREA AND LIMITS SHALL BE STAKED BY THE CONTRACTOR'S SURVEYOR PRIOR TO CONSTRUCTION OF CLEARING OF THE SITE. THE CONTRACTOR SHALL BE RESPONSIBLE FOR FAMILIARIZING HIMSELF WITH THE EXTENT OF WORK TO BE DONE IN EACH SEPARATE PHASE OF THE PROJECT, AND ANY WORK NECESSARY IN INACTIVE PHASES REQUIRED TO DEEM THE ACTIVE PHASES FINISHED, SAFE, AND SERVICEABLE.
6. THE DESIGN ENGINEER RESERVES THE RIGHT TO MAKE MINOR FIELD MODIFICATIONS TO GRADES AND STRUCTURE DESIGNS TO ACCOMMODATE FIELD CONDITIONS FOUND ON THE SITE. THIS INCLUDES BUT IS NOT LIMITED TO MINOR MODIFICATIONS TO GRADE, ALIGNMENT, SLOPE, OR STRUCTURE LOCATIONS. THE ENGINEER SHALL HAVE THE RIGHT TO MAKE SUCH CHANGES IN WRITING IN THE LOCATION AND QUANTITIES OF WORK AS MAY BE DEEMED ADVISABLE.
7. NO JOB WILL BE CONSIDERED COMPLETE UNTIL FINAL GRADING IS COMPLETE AND ALL CURBS, PAVEMENT, AND SIDEWALKS HAVE BEEN SWEPT CLEAN OF ALL DIRT AND DEBRIS, ALL SURVEY MONUMENTS ARE INSTALLED AND ALL VALVES, MANHOLES, AND BOXES HAVE BEN ADJUSTED ACCORDING TO THE PLANS AND STANDARD DETAILS.
8. SEE SPECIFICATION SECTION 01 11 00 SUMMARY OF WORK FOR DIVISION OF RESPONSIBILITY. SEE SPECIFICATION SECTION 00 70 00 CONDITIONS OF THE CONTRACT FOR DEFINITIONS.
9. ALL CONSTRUCTION SHALL BE IN ACCORDANCE WITH UNITED STATES ENVIRONMENTAL PROTECTION AGENCY STANDARDS AND POLICIES AND CURRENT SUPPLEMENTS THERETO.
10. ANY WORK PERFORMED WITHOUT THE APPROVAL OF THE ENGINEER AND/OR ALL WORK AND MATERIAL NOT IN CONFORMANCE WITH THE SPECIFICATIONS IS SUBJECT TO REMOVAL AND REPLACEMENT AT THE CONTRACTOR'S EXPENSE.
11. DEBRIS SHALL BE DISPOSED OF WITHIN APPROVED DISPOSAL FACILITIES.
12. THE CONTRACTOR SHALL PROVIDE ADEQUATE MEANS FOR CLEANING TRUCKS AND/OR OTHER EQUIPMENT OF MUD PRIOR TO ENTERING PUBLIC STREETS. IT IS THE CONTRACTOR'S RESPONSIBILITY TO CLEAN STREETS, ALLEY DUST, AND TAKE WHATEVER MEASURES ARE NECESSARY TO ENSURE THAT ALL ADJACENT ROADS ARE MAINTAINED IN A CLEAN, MUD AND DUST FREE CONDITION AT ALL TIMES.
13. CONTRACTOR SHALL TAKE MEASURES TO CONTROL DUST AND FUGITIVE EMISSIONS, INCLUDING BUT NOT LIMITED TO WATERING THE SITE TWICE DAILY DURING GRADING TO CONTROL DUST.
14. AN APPROVED SET OF PLANS SHALL BE ON THE JOB SITE AT ALL TIMES WORK IS IN PROGRESS. DEVIATION FROM THE PLANS WILL NOT BE ALLOWED WITHOUT AN APPROVED PLAN REVISION OR AUTHORIZATION FROM THE ENGINEER.
15. THESE DRAWINGS INDICATE THE GENERAL EXTENT OF THE REQUIRED WORK AND ARE NOT INTENDED TO INDICATE EVERY ELEMENT REQUIRED. THE CONTRACTOR SHALL FURNISH ALL ELEMENTS TO COMPLETE THE SCOPE OF WORK IN ACCORDANCE WITH THE CONTRACT DOCUMENTS. ALL ITEMS REQUIRING CLARIFICATIONS SHALL BE SUBMITTED AS A "REQUEST FOR INFORMATION" (RFI) TO THE ENGINEER PER SECTION 01 31 00 OF THE SPECIFICATIONS.
16. ALL CONSTRUCTION VEHICLES OR EQUIPMENT, MOBILE OR FIXED OPERATED, SHALL BE EQUIPPED WITH PROPERLY OPERATING AND MAINTAINED MUFFLERS IN ACCORDANCE WITH THE LOCAL NOISE ORDINANCES.
17. THE CONTRACTOR SHALL PROVIDE SHOP DRAWINGS FOR THE ENGINEER'S REVIEW, AS MAY BE NECESSARY FOR THE EXECUTION OF THE WORK AND AS REQUIRED BY THE DRAWINGS AND SPECIFICATIONS.
18. DUE TO THE ONGOING OPERATION OF THE FACILITY, CONTRACTOR SHALL PROVIDE A SEQUENCE OF CONSTRUCTION FOR TOWN AND ENGINEER'S APPROVAL. TWO WEEKS PRIOR TO THE START OF CONSTRUCTION THE SEQUENCE SHALL INCLUDE A DETAILED SCHEDULE OF EVENTS AND TIMEFRAME. ALL EQUIPMENT, PIPING, LABOR, ETC. FOR THE SEQUENCE SHALL BE THE RESPONSIBILITY OF THE CONTRACTOR. ALL TEMPORARY SHUTDOWNS AND CHANGES IN FACILITY OPERATION SHALL BE DISCLOSED TO OWNER AT LEAST 7 DAYS PRIOR.
19. PAVEMENT REPAIR, AS REQUIRED, MAY BE WITH COLD-MIX ASPHALT CONCRETE, WITH A MINIMUM THICKNESS OF 2 INCHES, USING AGGREGATE GRADING IN ACCORDANCE WITH MARSHALL MIX DESIGN OF SECTION 710 OF MAG UNIFORM STANDARD SPECIFICATIONS AND DETAILS FOR PUBLIC WORK CONSTRUCTION.
20. ALL CONSTRUCTION WORK SHALL BE PERFORMED IN ACCORDANCE WITH THE SOILS AND/OR GEOTECHNICAL REPORT PREPARED BY WESTERN TECHNOLOGIES, INC. DATED 10/25/2022. THIS REPORT IS SUPPLEMENTED BY 1) THESE PLANS AND SPECIFICATIONS, 2) YAVAPAI COUNTY PUBLIC WORKS STANDARDS AND SPECIFICATIONS, 3) STATE OF ARIZONA STANDARD DETAILS. IN THE EVENT OF CONFLICT, THE FORMER SHALL TAKE PRECEDENCE OVER THE LATTER. THE PERFORMANCE AND COMPLETION OF ALL WORK MUST BE TO THE SATISFACTION OF THE ENGINEER OF RECORD.

GENERAL CONSTRUCTION NOTES

ENGINEER'S NOTES

1. THE ENGINEER AND APPLICABLE AGENCY MUST APPROVE, PRIOR TO CONSTRUCTION, ANY ALTERATION TO OR VARIANCE FROM THESE PLANS. ANY VARIATION FROM THESE PLANS SHALL BE PROPOSED ON CONSTRUCTION FIELD PRINTS AND TRANSMITTED TO THE ENGINEER.
2. THE CONTRACTOR SHALL PROTECT AND MAINTAIN ALL EXISTING UTILITIES ON THE SITE. ANY DAMAGE TO EXISTING UTILITIES, WHETHER SHOWN OR NOT ON THE DRAWING SHALL BE REPAIRED/REPLACED AT THE CONTRACTOR'S EXPENSE. EXISTING SURFACE FEATURES AND FENCING SHALL BE REPLACED IN KIND.
3. ANY INSPECTION BY THE TOWN, COUNTY OR THE ENGINEER, SHALL NOT IN ANY WAY RELIEVE THE CONTRACTOR FROM ANY OBLIGATION TO PERFORM THE WORK IN STRICT COMPLIANCE WITH THE APPLICABLE CODES AND AGENCY REQUIREMENTS.
4. CONTRACTOR IS TO LOCATE ALL EXISTING PROPERTY MONUMENTS PRIOR TO CONSTRUCTION. NO EXISTING SURVEY MONUMENTATION SHALL BE REMOVED OR DISTURBED BY THE CONTRACTOR WITHOUT NOTIFICATION AND APPROVAL OF THE PROJECT SURVEYOR. THE CONTRACTOR SHALL CONTACT THE PROJECT SURVEYOR FOR THE SETTING OF REFERENCE POINTS 48 HOURS PRIOR TO DISTURBING OR REMOVING ANY MONUMENTS. A REGISTERED LAND SURVEYOR AT THE CONTRACTOR'S EXPENSE SHALL REPLACE ANY MONUMENTS DISTURBED DURING THE CONSTRUCTION OF THIS PROJECT.
5. NOTHING CONTAINED IN THE CONTRACT DOCUMENTS SHALL CREATE, NOR SHALL BE CONSTRUED TO CREATE, ANY CONTRACTUAL RELATIONSHIP BETWEEN THE ENGINEER AND THE CONTRACTOR OR ANY SUBCONTRACTOR.
6. ANY CONSTRUCTION WATER OBTAINED FROM THE TOWN WATER SOURCE WILL REQUIRE METER AND A BULK WATER PERMIT TO TRACK USAGE. THE TOWN WILL WAIVE FEES FOR PERMITTING AND USAGE IF USAGE IS LESS THEN 20,000 GALLONS. CONTACT THE TOWN OF JEROME AT (928) 634-7943 TO REQUEST A METER.
7. THE CONTRACTOR SHALL MAKE NO CLAIM AGAINST THE OWNER OR THE ENGINEER REGARDING ALLEGED INACCURACY OF CONSTRUCTION STAKES SET BY THE ENGINEER UNLESS ALL SURVEY STAKES SET BY THE ENGINEER ARE MAINTAINED INTACT AND CAN BE VERIFIED AS TO THEIR ORIGIN. IF, IN THE OPINION OF THE ENGINEER, THE STAKES ARE NOT MAINTAINED INTACT AND CANNOT BE VERIFIED AS TO THEIR ORIGIN, ANY REMEDIAL WORK REQUIRED TO CORRECT ANY ITEM OR IMPROPER CONSTRUCTION WORK IN THIS DEVELOPMENT SHALL BE PERFORMED AT THE SOLE EXPENSE OF THE RESPONSIBLE CONTRACTOR OR SUBCONTRACTOR.
8. TRAFFIC CONTROL SHALL BE MAINTAINED IN ACCORDANCE WITH THE TOWN OF JEROME MUNICIPAL CODES.
9. A PORTION OF THIS PROJECT SITE IS LOCATED WITHIN A DOCUMENTED 100-YR FEMA FLOODLAIN AS DESIGNATED ON THE PLANS.
10. IN CASES WHEN UNSTAKED EXISTING UTILITIES ARE ENCOUNTERED, SOME MINOR DEVIATION TO THE PROPOSED SEWER ALIGNMENT MAY BE ALLOWED TO MAINTAIN MINIMUM SEPARATION DISTANCES BETWEEN UTILITIES. ANY PROPOSED CHANGES TO THE ALIGNMENT MUST BE SUBMITTED TO THE TOWN'S REPRESENTATIVE FOR REVIEW. NO CHANGES WILL BE ALLOWED WITHOUT PROPER APPROVAL.
11. PRIOR TO BIDDING THE WORK, THE CONTRACTOR SHALL THOROUGHLY SATISFY HIMSELF AS TO THE ACTUAL CONDITIONS AND EARTHWORK QUANTITIES, IF ANY. NO CLAIM SHALL BE MADE AGAINST THE OWNER OR ENGINEER FOR ANY EXCESS OR DEFICIENCY THEREIN, ACTUAL OR RELATIVE.
12. THE ENGINEERS SHALL BE NOTIFIED BEFORE ANY ONSITE CONSTRUCTION BEGINS.
13. A SEPARATE PERMIT IS NECESSARY FOR ANY OFFSITE CONSTRUCTION.
14. APPROVAL OF THESE PLANS SHALL NOT PREVENT THE TOWN FROM REQUIRING CORRECTION OF ERRORS IN THE PLANS WHERE SUCH ERRORS ARE SUBSEQUENTLY FOUND TO BE IN VIOLATION OF ANY LAW OR ORDINANCE.

MECHANICAL CONSTRUCTION NOTES:

1. CONTRACTOR TO INSTALL PIPE SUPPORTS PER MANUFACTURER'S REQUIREMENTS AND SPECIFICATIONS. ALL DRY AREA PIPE SUPPORTS SHALL BE GALVANIZED STEEL U.N.O. ALL SUBMERGED PIPE SUPPORTS SHALL BE S.S. 316.
2. CONTRACTOR TO INSTALL PUMP BASE, GUIDE RAILS, AND BRACKETS PER MANUFACTURER'S REQUIREMENTS. CONTRACTOR SHALL CONFIRM SUPPLY OF PUMP MOUNTING EQUIPMENT WITH PUMP SUPPLIER.
3. ALL PROCESS PIPES SHALL BE COLOR COATED PER THE SPECIFICATIONS WITH THE EXCEPTION OF STAINLESS STEEL PIPES. ALL ABOVE GROUND PIPES SHALL ALSO BE OUTFITTED WITH A FLOW DIRECTION ARROW.
4. ALL ANCHORING/FASTENING SYSTEMS SHALL BE 316 S.S. REGARDLESS OF LOCATION, U.N.O.
5. CONTRACTOR SHALL SUBMIT SHOP DRAWINGS FOR REVIEW AND APPROVAL FOR EACH EQUIPMENT ITEM PRIOR TO INSTALLATION. INSTALLATION DETAILS FOR ALL EQUIPMENT ITEMS SHALL BE PER RESPECTIVE EQUIPMENT MANUFACTURER'S SHOP DRAWINGS AND RECOMMENDED INSTALLATION REQUIREMENTS.
6. ALL D.I.P. SHALL BE CLASS 350, UNLESS NOTED OTHERWISE.
7. ELEVATION OF EXISTING STRUCTURES, PIPING, AND COMPONENTS ARE APPROXIMATE. CONTRACTOR TO FIELD VERIFY PRIOR TO CONSTRUCTION.
8. PRECAST SUPPLIER TO PROVIDE STRUCTURAL CALCULATIONS STAMPED BY REGISTERED ENGINEER IN AZ TO DOCUMENT DESIGN OF PRECAST STRUCTURE.
9. GROOVE FITTINGS MAY BE USED IN LIEU OF FLANGE FITTINGS FOR ALL ABOVE GROUND D.I. PIPING.
10. CONTRACTOR SHALL BE RESPONSIBLE FOR ALL TEMPORARY PIPING AND EQUIPMENT NEEDED FOR PROCESS ISOLATION, BYPASS, AND TRANSITION.
11. ALL YARD PIPING SHALL BE SURVEYED FOR VERTICAL AND HORIZONTAL ALIGNMENT PRIOR TO BACKFILL.
12. ALL PIPE SUPPORTS SPACING SHALL MEET PIPING MANUFACTURER'S REQUIREMENTS.
13. STRUCTURAL DIMENSIONS CONTROLLED BY OR RELATED TO MECHANICAL OR ELECTRICAL EQUIPMENT SHALL BE VERIFIED BY THE CONTRACTOR AND REFLECTED ON SHOP DRAWING PRIOR TO CONSTRUCTION.
14. ALL PVC PIPE GREATER THAN 3" IN DIAMETER SHALL BE DIPS.
15. ALL EXPOSED PIPE SHALL INCLUDE HEAT TRACING AND INSULATION.
16. ALL NEW BURIED GRAVITY SEWER LINES AND FORCE MAINS SHALL BE INSTALLED WITH A MINIMUM 3' DEPTH OF EARTH COVER.

PERMITS

1. CONTRACTOR SHALL OBTAIN ALL PERMITS AT HIS OWN EXPENSE FROM LOCAL MUNICIPAL AND AIR POLLUTION CONTROL AUTHORITIES PRIOR TO BEGINNING CONSTRUCTION.
2. IT SHALL BE THE RESPONSIBILITY OF THE CONTRACTOR TO ARRANGE FOR THE RELOCATION AND RELOCATION COSTS, IF ANY, OF ALL UTILITIES, AND SUBMIT A UTILITY RELOCATION SCHEDULE TO THE MUNICIPALITY AND DESIGN ENGINEER PRIOR TO CONSTRUCTION. ALL PUBLIC UTILITY EQUIPMENT POLES, BOXES, STRUCTURES, AND MUNICIPAL UTILITY COMPANY EQUIPMENT SHALL BE RELOCATED BY THE APPROPRIATE UTILITY COMPANY OR MUNICIPALITY BEFORE ANY WORK IS STARTED.

RECORD DRAWINGS

1. ACCEPTANCE OF THE COMPLETED PAVING, GRADING, OR UTILITY INSTALLATION WILL NOT BE GIVEN UNTIL REPRODUCIBLE AS-BUILT PLANS HAVE BEEN SUBMITTED BY THE ENGINEER AND APPROVED BY THE LOCAL GOVERNING AGENCY.

OBSERVATION

1. THE CONTRACTOR SHALL CONTACT THE APPROPRIATE PUBLIC UTILITY COMPANIES FOR INSPECTION OF TRENCHING, BEDDING, AND BACKFILLING DONE IN CONJUNCTION WITH INSTALLATION OF THOSE UTILITIES ON THIS PROJECT.
2. SOILS COMPACTION TEST RESULTS MUST BE SUBMITTED TO THE ENGINEER'S OFFICE FOR ALL FILL MATERIAL FOR ROADS, TRENCH BACKFILL, AND SITE FILL MATERIALS UNDER SLABS AND STRUCTURES. NO FILL MATERIALS SHALL BE PLACED WITHOUT TESTING DURING PLACEMENT. CONTRACTOR SHALL SUBMIT ALL TEST RESULTS TO THE DESIGN ENGINEER AND GOVERNMENTAL AGENCIES.
3. CONTRACTOR SHALL SUBMIT A SCHEDULE, APPROVED IN WRITING BY A QUALIFIED CONSULTING TESTING AGENCY, FOR FREQUENCY, LOCATION, AND TYPE OF ALL PROJECT TESTING. THE CONTRACTOR WILL BE RESPONSIBLE FOR SCHEDULING AND COORDINATION OF ALL TESTING INCLUDING THE FOLLOWING TERMS WHICH SHALL BE TESTED IN ACCORDANCE WITH MAG SPECIFICATIONS:
   - 3.1. SUBGRADE COMPACTION
   - 3.2. BASE COURSE COMPACTION
   - 3.3. ASPHALT PAVEMENT MIX DESIGN QUALITY
   - 3.4. CONCRETE STRENGTH
   - 3.5. TRENCH BEDDING AND BACKFILL
   - 3.6. TESTING FOR UTILITIES, PIPING, AND DRAINAGE SYSTEMS

UTILITIES

1. A UTILITY COORDINATION MEETING SHALL BE COORDINATED BY THE CONTRACTOR PRIOR TO THE START OF ANY WORK. ALL UTILITY ISSUES SHALL BE ADDRESSED IN ACCODANCE WITH MAG 105.6.
2. LOCATION OF UNDERGROUND UTILITIES SHALL BE ACCOMPLISHED IN ACCORDANCE WITH ARS 40-360.22 PRIOR TO ANY EXCAVATION. BLUE STAKE SHALL BE CALLED AT 1-800-STAKE-IT FOR ACCURATE LOCATION OF UTILITIES AS NECESSARY AND PRIOR TO AN EXCAVATION. UTILITIES IF INDICATED ON PLANS ARE APPROXIMATE LOCATIONS ONLY, TAKEN FROM THE UTILITY COMPANY MAPS. IF THE CONTRACTOR ENCOUNTERS ANY LINES NOT INDICATED ON THE DRAWINGS OR MARKED IN THE FIELD BY THE UTILITY COMPANY THAT MAY INTERFERE WITH HIS WORK, HE SHALL NOTIFY THE APPROPRIATE UTILITY COMPANY IMMEDIATELY FOR DISPOSITION OF THOSE FACILITIES.
3. UTILITIES MUST BE LOCATED TO MINIMIZE INTERFERENCE WITH ONE ANOTHER, TO PROVIDE REQUIRED HORIZONTAL AND VERTICAL SEPARATIONS, AND TO PROVIDE MAINTENANCE ACCESS WITHOUT VIOLATING EASEMENT BOUNDARIES. SEPARATION BETWEEN UTILITIES PER MAG STANDARD.
4. ALL WATER MAINS, APPURTENANCES, AND INSTALLATIONS SHALL CONFORM TO A.W.W.A. STANDARDS AND ARIZONA DEPARTMENT OF ENVIRONMENTAL QUALITY AND TOWN OF JEROME REQUIREMENTS. WATER SYSTEMS SHALL BE TESTED PER A.D.E.Q. BULLETIN NO. 10 TO THE APPROPRIATE A.W.W.A. STANDARDS.

CONSTRUCTION STAKING

1. THE ACCURACY OF ALL CONSTRUCTION WORK SHALL BE MAINTAINED AND VERIFIED BY THE OWNER'S SURVEYOR AT THE OWNER'S EXPENSE BY PROVIDING CONSTRUCTION STAKING SUITABLE TO THE TOWN ENGINEER. STAKES WILL BE SET ESTABLISHING LINES AND GRADES (FINISH OR FLOWLINE) FOR ALL CONSTRUCTION INCLUDING ROADS, CURB AND GUTTER, SIDEWALKS, UTILITIES, STRUCTURES, AND OTHER WORK AS CONSIDERED NECESSARY BY THE ENGINEER. ALL SURVEY CONTROL SHALL BE SET BY THE OWNER'S SURVEYOR FROM MONUMENTS ACCEPTABLE TO THE ENGINEER.

GRADING AND EARTHWORK

1. NO GRADING OR TRENCHING WORK SHALL BEGIN PRIOR TO SUPPORTING AND PROTECTING EXISTING ONSITE AND ADJACENT PROPERTY FROM SETTLING, CRACKING, OR OTHER DAMAGE WHICH MIGHT RESULT. CONTRACTOR SHALL VERIFY FROM SOILS REPORT RECOMMENDATIONS THE DEGREE OF DIFFICULTY REQUIRED FOR TRENCHING AND EXCAVATION WORK BASED ON DEPTH AND TYPE OF MATERIALS TO BE ENCOUNTERED.
2. CLEARING AND GRUBBING: EXAMINE SITE AND PROVIDE NECESSARY EQUIPMENT AND LABOR TO REMOVE FROM THE SITE AND DISPOSE OF STUMPS, ROOTS, ROCKS, LOOSE FILL, VEGETATION DEBRIS, AND ANY OTHER OBJECTIONABLE MATERIALS FROM THE BUILDING AND MATERIAL. CLEAN. UNCLASSIFIED ONSITE SOILS MAY BE USED IN GENERAL AS FILL MATERIAL. SEE MAG SPECIFICATIONS 201 AND 215.
3. SUBGRADE PREPARATION: IF THE NATURAL SUBGRADE IS LESS THAN THE REQUIRED DENSITY, IT SHALL BE SCARIFIED AND COMPACTED TO A MINIMUM DEPTH OF TWELVE INCHES OR AS NOTED IN THE SOILS REPORT IMMEDIATELY PRIOR TO PLACING SUBSEQUENT FILL MATERIAL THEREON. THE CONTRACTOR IS RESPONSIBLE FOR MAINTENANCE AND REPAIR OF DAMAGE TO PREPARED SUBGRADE CAUSED BY CONTRACTOR'S OPERATIONS OR PUBLIC TRAFFIC UNTIL ACCEPTANCE OF PROJECT. NO MATERIALS SHALL BE PLACED UPON THE PREPARED SUBGRADE UNTIL IT MEETS THE SPECIFIED REQUIREMENTS. ROADWAY SUBGRADE COMPACTION INCLUDES SUBGRADE UNDER ALL PAVEMENT, CURB, SIDEWALKS, SHOULDERS, AND FILL SLOPES. SUBGRADE TOLERANCES SHALL BE AS SPECIFIED IN MAG SECTION 301. OPEN LANDSCAPED AREAS SHALL BE GRADED TO ±0.2 FEET.
4. IT IS THE RESPONSIBILITY OF THE CONTRACTOR TO CONTACT THE TESTING COMPANY FOR SCHEDULING OF COMPACTION TESTING. THE FREQUENCY OF DENSITY AND MOISTURE TESTS REQUIRED FOR ADEQUATE CONTROL SHALL BE THE RESPONSIBILITY OF THE SOILS ENGINEER WHO SHALL CERTIFY TO THE ENGINEER AND CONTRACTOR AT PROJECT END THAT THE ROADBED FILL IS COMPACTED AS OUTLINED HEREIN. COMPACTION SHALL BE ACHIEVED BY MECHANICAL MEANS. IN NO CASE SHALL STRUCTURE BACKFILLING BE FLOOD WATER SETTLED.
5. ALL SLOPE CONSTRUCTION AND ROADWAY EXCAVATION SHALL CONFORM TO THE REQUIREMENTS OF MAG SPECIFICATIONS SECTIONS 20, 205, 211, 301, AND UBC SECTIONS 7009 AND 8010. CUT AND FILL SLOPES SHALL BE AS INDICATED ON THE DETAILS AND PLANS. CUT AND FILL SLOPE GRADIENTS SHALL NOT EXCEED 2:1 IN STEEPNESS WITHOUT WRITTEN AUTHORIZATION FROM THE SOILS ENGINEER AND EXAMINATION BY THE DESIGN ENGINEER. ALL SLOPE CONDITIONS SHALL BE PROVIDED WITH THE APPROPRIATE BENCHES AS SPECIFIED IN THE REFERENCE DOCUMENTS AND INDICATED ON THE PLANS. IF SOILS CONDITIONS ARE ENCOUNTERED WHICH DO NOT ALLOW THE ESTABLISHMENT OF THE INDICATED CUT OR FILL SLOPES, THE DESIGN ENGINEER AND SOILS ENGINEER SHALL BE CONTACTED IMMEDIATELY TO DETERMINE AN ADJUSTMENT TO THE SLOPE GRADIENT OR TO ESTABLISH A METHOD OF STABILIZATION. ALL FILL SLOPES SHALL BE COMPACTED AS EACH LIFT OF FILL MATERIAL IS PLACED. ALL CUT AND FILL SLOPES SHALL BE UNIFORMLY GRADED TO LINES AND GRADES INDICATED. TOPS OF ALL CUT SLOPES SHALL BE ROUNDED AND ALL UNSTABLE AND LOOSE MATERIAL AT TOP OF SLOPE SHALL BE REMOVED. TOP OF CUT SLOPES OVER 10' HIGH SHALL BE PROVIDED WITH BRO DITCHES FOR DRAINAGE. ALL CUT AND FILL SLOPES SHALL BE REVEGETATED WITH A MIXTURE OF NATIVE GRASSES AND WILD FLOWER SEED OR AS SPECIFIED WITHIN THE LANDSCAPE PLANS. COMPACT ALL SHOULDERS AND BACKFILLS BEHIND ALL STRUCTURES AND WALLS.
6. COMPACT TO THE FOLLOWING SPECIFIED PERCENT OF MAXIMUM DENSITY AS DETERMINED IN ACCORDANCE WITH ASTM D698 AND MAG SECTION 211 OR AS DIRECTED IN THE SOILS REPORT.

MINIMUM PERCENT COMPACTION

SUBGRADE SOIL:

- ROADWAY AND STRUCTURE AREAS - - - - - - - - - - - - - -95
- PAVED AREAS (PAVEMENTS, SIDEWALKS, & PADS) - - 95

EARTH FILL:

- ROADWAY AND STRUCTURE AREAS - - - - - - - - - - - - - -95
- PAVED ARES (PAVEMENTS, SIDEWALKS, & PADS) - - - 95
- GRASSED AND PLANTING AREAS - - - - - - - - - - - - - - - - 85
- AGGREGATE BASE COURSE - - - - - - - - - - - - - - - - - - - 100
- BACKFILL AROUND STRUCTURES - - - - - - - - - - - - - - - -95

BACKFILL FOR UTILITY TRENCHES (PER MAG SECTION 601). PROVIDE TYPE 1 BACKFILL OR AS DIRECTED BY APPROPRIATE UTILITY REQUIREMENTS. BACKFILL FOR TRENCHES WITHIN 10' OF STRUCTURES AND WALLS SHALL BE COMPACTED TO 95% UNLESS DIRECTED OTHERWISE BY ENGINEER.

100% ISSUED FOR BID

NO	BY	DATE	REVISIONS	DATE	APP.

Registered Professional Engineer (Civil) CERTIFICATE NO. 70097 TAYLOR B. PIERCE Date Signed 10/31/25 ARIZONA, U.S.A. Expires 12/31/28

THESE DRAWINGS ARE THE PROPERTY OF P.A.C.E. AND SHALL NOT BE REPRODUCED IN ANY MANNER NOR BE USED FOR CONSTRUCTION UNLESS STAMPED "ISSUED FOR CONSTRUCTION".

PREPARED BY: PACE
DESIGNED BY: NE
DRAWN BY: DS, WW
CHECKED BY: TP SCALE: AS NOTED
DATE NOV 2025
JOB NO. B614

TITLE: GENERAL NOTES AND ABBREVIATIONS

JOB: TOWN OF JEROME WASTEWATER TREATMENT PLANT, YAVAPAI CO. AZ

PREPARED BY: PACE Advanced Water Engineering
8723 E. VIA de COMMERICO, SUITE A-204 | SCOTTSDALE, CA 85258
P: (408) 991-3595 | www.pacewater.com
TAYLOR B. PIERCE R.C.E 70097 DATE

SHEET G2.0
3 OF 99 SHEETS
JOB NO. B614

W:\B614\Engineering\B614-30\sheets\B614 - G2.0 GENERAL NOTES.dwg - Tab: G2.0 - by neddington on 11/18/25 at 3:11:17 PM

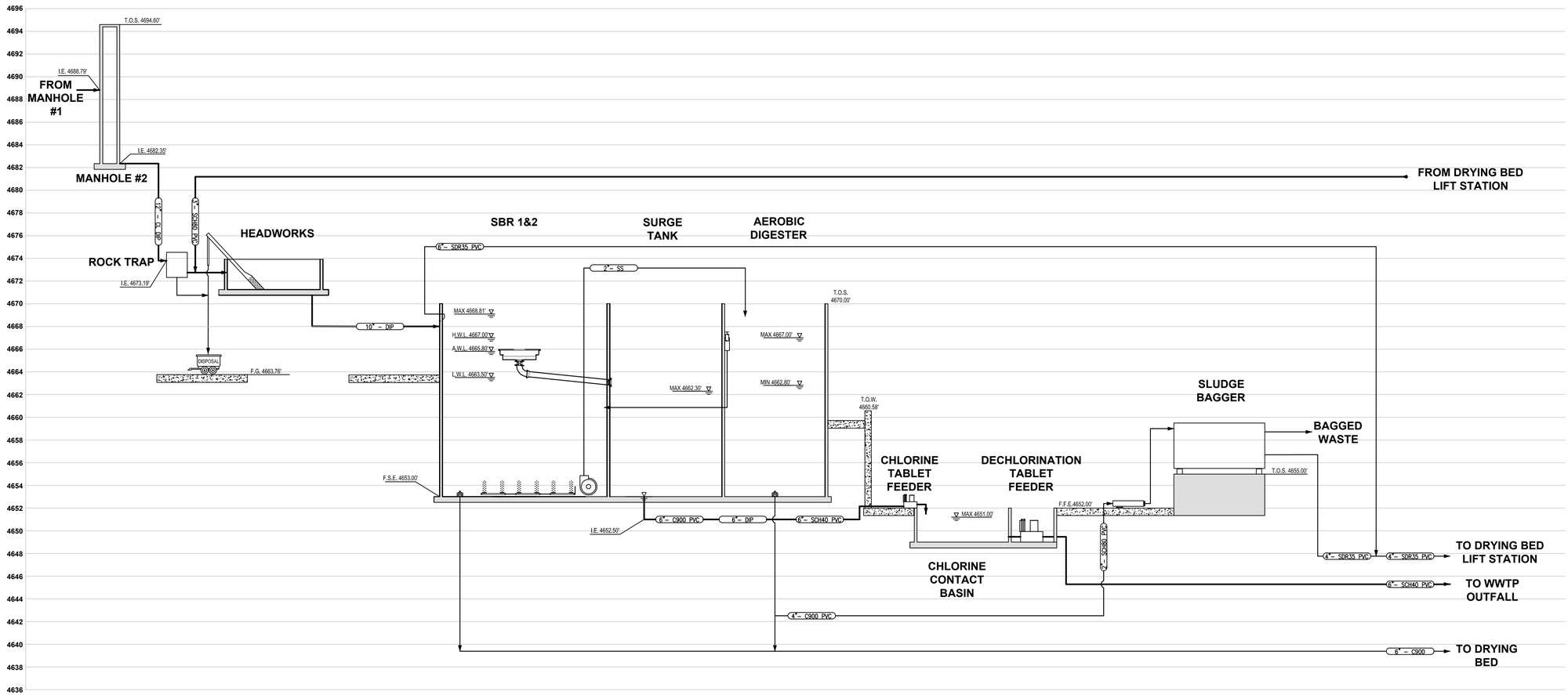

LEGEND

- PUMP
- ROTARY LOBE PUMP
- SLIDE/WEIR GATE
- TELESCOPING VALVE
- MUD VALVE
- PRIMARY FLOW
- SECONDARY FLOW

NO	BY	DATE	REVISIONS	DATE	APP.

Registered Professional Engineer (Civil) CERTIFICATE NO. 70097 TAYLOR B. PIERCE Signed ARIZONA, U.S.A. Expires 12/31/28

PREPARED BY: PACE
DESIGNED BY: NE
DRAWN BY: DS, WW
CHECKED BY: TP
SCALE: AS NOTED
DATE: NOV 2025
JOB NO.: B614

THESE DRAWINGS ARE THE PROPERTY OF P.A.C.E. AND SHALL NOT BE REPRODUCED IN ANY MANNER NOR BE USED FOR CONSTRUCTION UNLESS STAMPED "ISSUED FOR CONSTRUCTION".

TITLE: **HYDRAULIC PROFILE**

JOB: TOWN OF JEROME
WASTEWATER
TREATMENT PLANT
YAVAPAI CO. AZ

100% ISSUED FOR BID

PREPARED BY: TAYLOR B. PIERCE R.C.E 70097 DATE

PACE
Advanced Water Engineering
8723 E. Via de Commercio, Suite 214, Anaheim, CA 92808
P. (408) 991-3595 | www.pacewater.com

SHEET
G3.0
4 OF 99 SHEETS

JOB NO. B614

W:\B614\Engineering\B614-30\sheets\B614-G3.0 HYDRAULIC PROFILE.dwg - Tab: G3.0 - by reddington on 03/02/26 at 9:52:17 AM

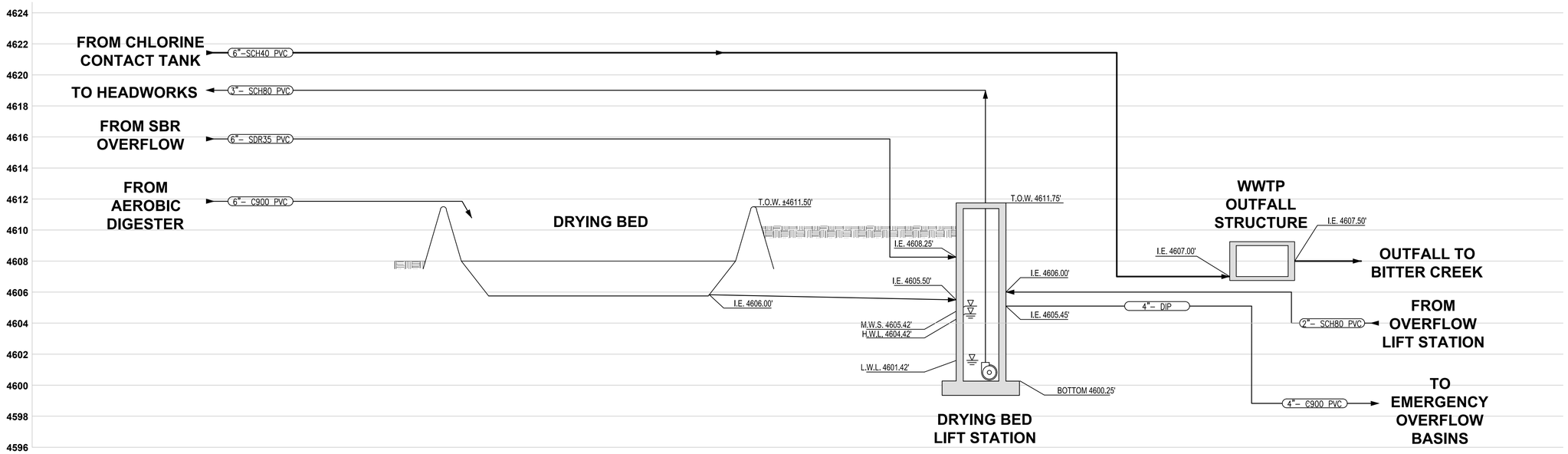

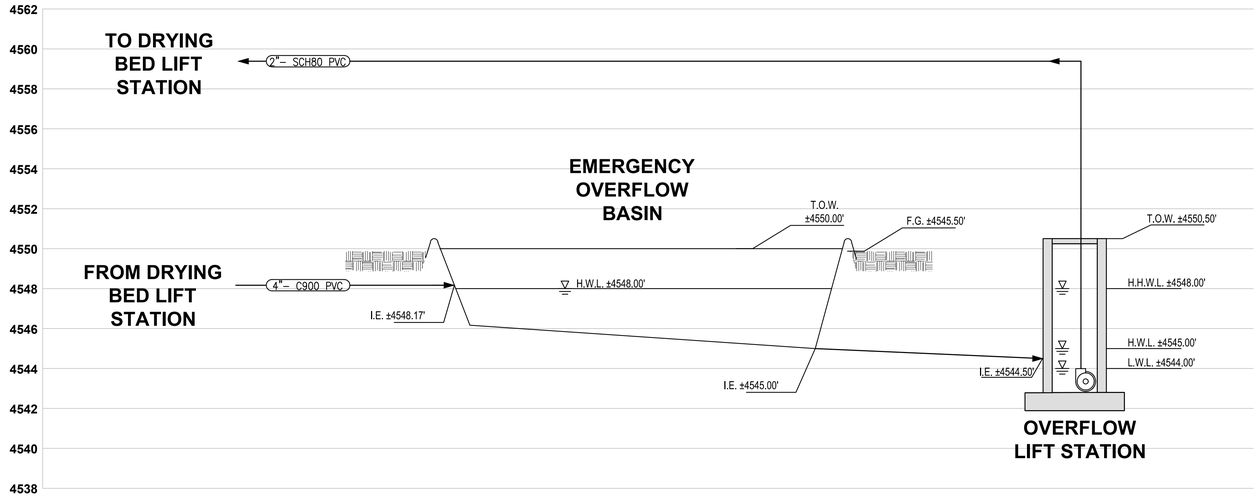

LEGEND

- PUMP
- ROTARY LOBE PUMP
- SLIDE/WEIR GATE
- TELESCOPING VALVE
- MUD VALVE
- PRIMARY FLOW
- SECONDARY FLOW

100% ISSUED FOR BID

HYDRAULIC PROFILE

TOWN OF JEROME
WASTEWATER
TREATMENT PLANT
YAVAPAI CO. AZ

JOB

PREPARED BY: PACE
DESIGNED BY: NE
DRAWN BY: DS, WW
CHECKED BY: TP
SCALE: AS NOTED
DATE: NOV 2025
JOB NO.: B614

Registered Professional Engineer (Civil)
CERTIFICATE NO. 70097
Timothy B. Pierce
Signed
ARIZONA, U.S.A.
Expires 12/31/28

NO	BY	DATE	REVISIONS	DATE	APP.

THESE DRAWINGS ARE THE PROPERTY OF P.A.C.E. AND SHALL NOT BE REPRODUCED IN ANY MANNER NOR BE USED FOR CONSTRUCTION UNLESS STAMPED 'ISSUED FOR CONSTRUCTION'.

PREPARED BY: PACE
Advanced Water Engineering
8723 E. VIA de COMMERCIO, BLDG. 4, SCOTTSDALE, CA 85258
P: (480) 991-3595 | www.pacewater.com
TAYLOR B. PIERCE R.C.E. 70097 DATE

SHEET
G3.1
5 OF 99 SHEETS

JOB NO. B614

W:\B614\Engineering\B614-3\Sheets\B614-G3.0-HYDRAULIC PROFILE.dwg - Tab: G3.1 - by roddington on 03/02/26 at 9:52:17 AM

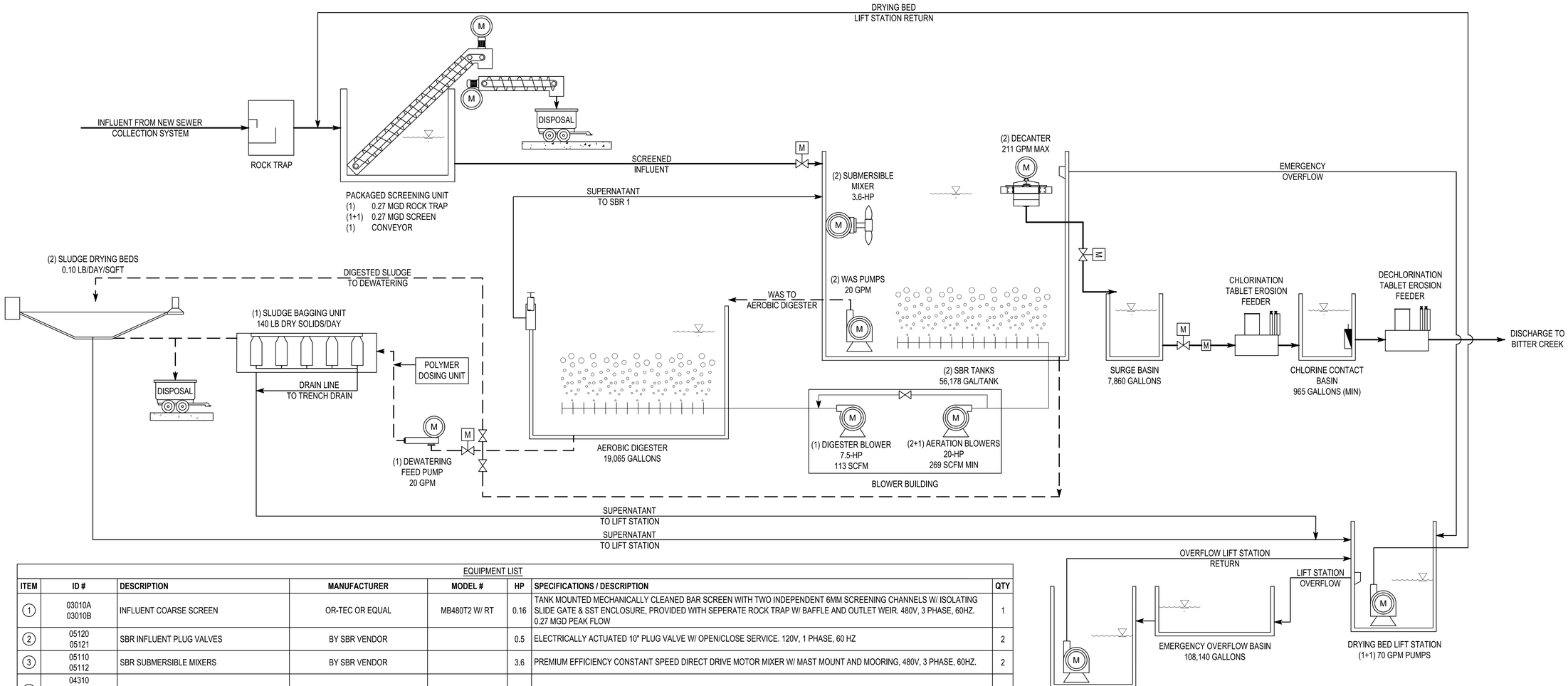

EQUIPMENT LIST

ITEM	ID #	DESCRIPTION	MANUFACTURER	MODEL #	HP	SPECIFICATIONS / DESCRIPTION	QTY
1	03010A 03010B	INFLUENT COARSE SCREEN	OR-TEC OR EQUAL	MB480T2 W/ RT	0.16	TANK MOUNTED MECHANICALLY CLEANED BAR SCREEN WITH TWO INDEPENDENT 6MM SCREENING CHANNELS W/ ISOLATING SLIDE GATE & SST ENCLOSURE, PROVIDED WITH SEPERATE ROCK TRAP W/ BAFFLE AND OUTLET WEIR. 480V, 3 PHASE, 60HZ. 0.27 MGD PEAK FLOW	1
2	05120 05121	SBR INFLUENT PLUG VALVES	BY SBR VENDOR		0.5	ELECTRICALLY ACTUATED 10" PLUG VALVE W/ OPEN/CLOSE SERVICE. 120V, 1 PHASE, 60 HZ	2
3	05110 05112	SBR SUBMERSIBLE MIXERS	BY SBR VENDOR		3.6	PREMIUM EFFICIENCY CONSTANT SPEED DIRECT DRIVE MOTOR MIXER W/ MAST MOUNT AND MOORING, 480V, 3 PHASE, 60HZ.	2
4	04310 04311 04312	SBR AERATION BLOWERS	BY SBR VENDOR		20	VFD CONTROLLED PD BLOWER UNIT W/ SOUND ATTENUATED ENCLOSURE, 361 SCFM @ 6.63 PSI, 480V, 3 PHASE, 60HZ.	3
5	04313	DIGESTER AERATION BLOWER	BY SBR VENDOR		7.5	VFD CONTROLLED PD BLOWER UNIT W/ SOUND ATTENUATED ENCLOSURE, 110 SCFM @ 6.63 PSI, 480V, 3 PHASE, 60HZ. CONTROLLED	1
6	04180 04181	RETREIVABLE FINE BUBBLE DIFFUSER SYSTEM	BY SBR VENDOR		N/A	RETRIEVABLE DIFFUSER RACK ASSEMBLY WITH MIN 30" EPDM TUBE DIFFUSERS, RANGE 1.0 CFM - 10.0 CFM (1 - 5 SCFM DESIGN) 2/ W EPDM FLEXIBLE DROP LINE AND QUICK DISCONNECT FITTINGS	60
7	04280	COARSE BUBBLE DIFFUSER SYSTEM	BY SBR VENDOR		N/A	3" EPDM DISK COARSE BUBBLE DIFFUSERS, RANGE 0.5 CFM - 5.0 CFM (0.5 - 2 SCFM DESIGN) 3/8" CXN	12
8	05100 05101	WAS TRANSFER PUMPS	BY SBR VENDOR		1.8	20 GPM @ 15' TDH SUBMERSIBLE NON-CLOG SLUDGE PUMP, 1.8 HP 480V, 3 PHASE, 60HZ W/ BASE AND SS GUIDE RAIL	2
9	05111 05113	SOLIDS EXCLUDING FLOATING DECANTER	BY SBR VENDOR		0.5	211 GPM FLOATING DECANTER W/ 120V, 1 PHASE, 60 HZ ACTUATED SUBMERGED WEIR, MOORING AND 6" DISCHARGE HOSE ASSEMBLY	2
10	05121 05123	SBR DECANT VALVE	BY SBR VENDOR		0.33	ELECTRICALLY ACTUATED 6" BUTTERFLY VALVE W/ MODULATING SERVICE, 480V, 3 PHASE, 60HZ	2
11	06221	TRANSFER/EFFLUENT VALVE	BY SBR VENDOR		0.33	ELECTRICALLY ACTUATED 6" BUTTERFLY VALVE W/ MODULATING SERVICE, 480V, 3 PHASE, 60HZ	1
12	06290	CHLORINATION EROSION TABLET FEEDER	NORWECO OR EQUAL	SERIES 4000	N/A	6" SCH 80 PVC HUB TABLET FEEDER W/ ADJUSTABLE INLET BAFFLE AND OUTLET WEIR AND 24" RISER ASSEMBLIES	1
13	05291	DECHLORINATION EROSION TABLET FEEDER	NORWECO OR EQUAL	SERIES 4000	N/A	6" SCH 80 PVC HUB TABLET FEEDER W/ ADJUSTABLE INLET BAFFLE AND OUTLET WEIR AND 24" RISER ASSEMBLIES	1
14	08400	DEWATERING FEED PUMP	BOERGER OR EQUAL	AN 40	3.0	20 GPM ROTARY LOBE SLUDGE PUMP, 3 HP 480V, 3 PHASE, 60HZ	1
15	08410	DRY POLYMER MAKE-DOWN AND FEED UNIT	PROMINENT OR EQUAL	ULTROMAT MT 140	0.25	POLYPROPOLENE PREP TANK W/ ELECTRIC STIRRER, WETTING CONE AND INJECTOR 480V, 3 PHASE, 60 HZ	1
16	08401	POLYMER METERING PUMP	PROMINENT OR EQUAL	DULCOFLEX - DFXa 0530	0.16	0.08 - 7.93 GPH SHELF-MOUNTED PERISTALTIC METERING PUMP, 73 PSI MAX BACK PRESSURE, 1/2" x 3/8" POLYURETHANE CONNECTOR TUBING, 115V, 1-PH SERVICE	1
17	08490	SLUDGE BAGGER SYSTEM	ENVIRODYNE, OR EQUAL	585-8i	N/A	20 GPM 8-BAG SLUDGE DEWATERING SYSTEM MAX LOADING RATE OF 20 GPM OR 100 #/HR - 25# ACTIVE POLYMER / TON DS	1
18	07400	DRYING BED DRAIN RETURN PUMPS	GRUNDFOS OR EQUAL	SEG.A15.40.EX.2.60H	4.16	70 GPM @ 90' TDH SUBMERSIBLE GRINDER PUMP, 5 HP 480V, 3 PHASE, 60HZ W/ BASE AND SS GUIDE RAIL	2
19	07401	PACKAGED OVERFLOW LIFT STATION	E ONE OR EQUAL	SP84S	2	31 GPM @ 82' TDH SDUPLEX GRINDER PRE-PACKAGED PUMP STATION, 2 HP 240V, 1 PHASE, 60 HZ W/ INTEGRAL FLOAT CONTROLS, PANEL AND SINGLE WARNING BEACON	1
20	SEE PID	PRESSURE TRANSDUCER	BY SBR VENDOR		N/A	304 SS SUBMERSIBLE PRESSURE TRANSDUCER WITH 4-20 mA SIGNAL OUTPUT	4
21	SEE PID	LEVEL SENSOR	BY SBR VENDOR		N/A	316 SS FLOAT SWITCH WITH THREE-CONDUCTOR ELECTRICAL CABLE	4
22	05160A 05161A	DISSOLVED OXYGEN CONTROLLER	BY SBR VENDOR		N/A	NEMA 4X ENCLOSURE WITH AC 100-230 VAC POWER SUPPLY, 4-20 mA SIGNAL OUTPUT	2
23	05160B 05161B	DISSOLVED OXYGEN PROBE	BY SBR VENDOR		N/A	304 SS PROBE	2
24	06240	EFFLUENT FLOW METER	BY SBR VENDOR		N/A	6" ELECTROMAGNETIC FLOW METER W/ TRAMSMITTER, ±1%ACCURACY 5D/3D, WITH 4-20 mA SIGNAL OUTPUT	1
25	01003	STANDBY GENERATOR			N/A	600 KW STANDBY GENERATOR W/ SOUND ATTENUATED OUTDOOR ENCLOSURE AND SUB BASE FUEL TANK	1

DESIGN FLOWS:

MAX MONTH AVE DAY FLOW:	90,000 GPD
MAX PEAK DAY FLOW:	135,000 GPD
PEAK HOUR FLOW:	270,000 GPD

INFLUENT PARAMETERS:

BOD:	360 MG/L
TSS:	250 MG/L
TKN:	40 MG/L

EFFLUENT PARAMETERS:

BOD:	<30 MG/L
TSS:	<30 MG/L
TN:	<10 MG/L
FECAL COLIFORM:	200 CFU/100 ML (4/7 SAMPLES); 800 CFU/100 ML (SINGLE SAMPLE MAX)

LEGEND

- FLOW METER
- PUMP
- BLOWER
- ROTARY LOBE PUMP
- ISOLATION VALVE/GATE
- MOTORIZED VALVE
- SLIDE/WEIR GATE
- TELESCOPING VALVE
- MIXER
- PRIMARY FLOW
- SECONDARY FLOW
- SLUDGE FLOW

100% ISSUED FOR BID

NO	BY	DATE	REVISIONS	DATE	APP.

Registered Professional Engineer (Civil) CERTIFICATE NO. 70097 Nathan E. Pace Signed ARIZONA, U.S.A. Expires 12/31/28

THESE DRAWINGS ARE THE PROPERTY OF P.A.C.E. AND SHALL NOT BE REPRODUCED IN ANY MANNER NOR BE USED FOR CONSTRUCTION UNLESS STAMPED "ISSUED FOR CONSTRUCTION".

PREPARED BY: PACE
DESIGNED BY: NE
DRAWN BY: DS, WW
CHECKED BY: TP
SCALE: AS NOTED
DATE: NOV 2025
JOB NO.: B614

TITLE: PROCESS FLOW DIAGRAM

JOB: TOWN OF JEROME WASTEWATER TREATMENT PLANT — YAVAPAI CO. AZ

PREPARED BY:
PACE
Advanced Water Engineering
8733 E. Via de Ventura, Suite F-110, SCOTTSDALE, CA 85258
P: (480) 991-3985 | www.pacewater.com
TAYLOR B. PIERCE R.C.E 70097 DATE

SHEET
G3.2
6 OF 99 SHEETS

JOB NO. B614

W:\B614\Engineering\B614-30\sheets\B614-G3.0 HYDRAULIC PROFILE.dwg - Tab: G3.2 - by neddigton on 03/02/26 at 9:32:17 AM

1 GENERAL

1.1 ALL PAVING, GRADING PIPING AND UTILITY LINE CONSTRUCTION WORK WITHIN THE PUBLIC RIGHT-OF-WAY, ON PRIVATE STREETS, ACCESS WAYS, LOT GRADING, MATERIALS, AND WORKMANSHIP SHALL COMPLY WITH TOWN OF JEROME ENGINEERING STANDARDS AND SPECIFICATIONS, AND SHALL CONFORM TO THE LATEST MARICOPA ASSOCIATION OF GOVERNMENTS (MAG) AND A.D.O.T. STANDARD DETAILS AND SPECIFICATIONS. GRADING WORK SHALL CONFORM TO MAG SPECS, THE SOILS REPORT* AND CHAPTER 70 ENTITLED "EXCAVATION AND GRADING" OF THE UNIFORM BUILDING CODE (UBC) LATEST EDITION, SUBSECTIONS 7001 TO 7005, 7009 TO 7013, FIGURES 70-1 AND 70-2 AND AS STATED THEREIN. LOCAL MUNICIPAL STANDARD DETAILS WILL CONTINUE TO APPLY WHERE NOT ADOPTED OR INCLUDED BY MAG. THE FOLLOWING NOTES AND SPECIFICATIONS ARE HEREBY MADE A PART OF THE CONTRACT DOCUMENTS AND PROJECT SPECIFICATIONS. WHERE THERE EXISTS A CONFLICT BETWEEN THESE NOTES, MAG SPECS, UBC, THE SOILS REPORT* OR THE PROJECT SPECIFICATIONS, THE MORE STRINGENT OF THE REQUIREMENTS SHALL GOVERN UNLESS PRIOR CLARIFICATION FROM THE ENGINEER HAS BEEN GIVEN IN WRITING TO THE CONTRACTOR. THE CONTRACTOR AS STATED HEREIN SHALL MEAN THE GENERAL CONTRACTOR AND HIS ASSOCIATED SUBCONTRACTORS. THE GENERAL CONTRACTOR IS RESPONSIBLE FOR THE COORDINATION AND PERFORMANCE OF THE WORK OF ALL OF HIS SUBCONTRACTORS AND SUPPLIERS.

1.2 ALL WORK SHALL BE BID AND INSTALLED BY THE CONTRACTOR COMPLETE AND OPERATIONAL TO LINES, GRADES AND FUNCTIONS INDICATED ON ALL PLANS AND SPECIFICATIONS. PROVIDE ALL LABOR, MATERIALS, EQUIPMENT AND SERVICES NECESSARY TO COMPLETE ALL PROJECT EARTHWORK AND SITE WORK INCLUDING BUT NOT LIMITED TO: SITE CLEARING, GRUBBING, DEMOLITION'S, DEBRIS REMOVALS FROM THE SITE, IMPORT AND/OR EXPORT OF SOILS AND OTHER MATERIALS TO AND FROM THE SITE, BORROW MATERIALS, TEMPORARY SOILS MATERIAL STOCKPILING, BACKFILL OF ONSITE BORROW PITS, MOVING OF MATERIALS, CUT AND FILL, SLOPES, SOILS AND BANK STABILIZATION AND PROTECTION, BERMING, ROADWAY EXCAVATIONS, RELOCATION'S, STRUCTURE EXCAVATIONS, TRENCHING, ALL BACKFILLING, SITE GRADING, PAVING, PIPING, UTILITY LINE AND STORM DRAINAGE CONSTRUCTION, CURBS, SITE CONCRETE WORK AND OTHER MISCELLANEOUS SITE WORK STRUCTURES AND ITEMS INDICATED ON THE PLANS AND IN THE CONTRACT DOCUMENTS.

1.4 ANY QUANTITIES SHOWN ON PLANS ARE NOT VERIFIED BY THE ENGINEER. QUANTITIES ARE APPROXIMATE ONLY AND INTENDED AS A GUIDE FOR ESTIMATING PURPOSES. THE CONTRACTOR IS RESPONSIBLE FOR PROVIDING HIS OWN QUANTITY TAKE OFFS. THE CONTRACTOR SHALL VISIT THE SITE AND REVIEW THE SOILS CONDITIONS AND THE SOILS REPORT* WITH THE PROJECT SOILS ENGINEER PRIOR TO BIDDING THIS PROJECT. ANY DISCREPANCIES IN SITE MATERIALS SHALL BE BROUGHT TO THE ATTENTION OF THE DESIGN ENGINEER 7 DAYS MINIMUM PRIOR TO BIDDING FOR REVIEW. ALL SHRINK OF EARTH MATERIAL OR EXCESS MATERIAL FROM UTILITY TRENCHES AND FOUNDATIONS SHALL BE INCLUDED IN THE CONTRACTOR'S BID.

1.5 THE ENGINEER MAY REQUIRE THE SUBMITTAL OF A "CERTIFICATE OF COMPLIANCE" AND/OR "MANUFACTURER'S GUIDELINES" FOR ANY MATERIALS USED IN THE WORK. MANUFACTURER'S GUIDELINES SHALL CONSISTS OF WRITTEN INSTRUCTIONS FOR SHIPPING, HANDLING, UNLOADING, CUTTING, JOINING, INSTALLATION, STORAGE, AND/OR ANY OTHER FACETS OF CONSTRUCTION

1.6 THE ENGINEER MAY REQUIRE ANY MATERIALS USED IN THE WORK TO BE TESTED ACCORDING TO AASHTO AND ASTM STANDARDS. THE CONTRACTOR SHALL, AT HIS EXPENSE, SUPPLY CERTIFICATES OR RESULTS OF TESTING.

1.7 ALL WORK AND MATERIALS NOT CONFORMING TO SPECIFICATIONS OR PERFORMED WITHOUT THE CONSENT OF THE OWNER OR HIS REPRESENTATIVE WILL BE SUBJECT TO REJECTION BY THE OWNER AND/OR ENGINEER AND REPLACED AT THE CONTRACTOR'S EXPENSE.

1.8 THE CONTRACTOR SHALL GUARD AGAINST DAMAGE DURING CONSTRUCTION TO ADJACENT PROPERTIES, FENCES, WALLS AND UTILITY EQUIPMENT. ANY ITEMS DAMAGED BY CONSTRUCTION SHALL BE REPLACED WITH SAME KIND OR BETTER AT CONTRACTOR'S EXPENSE.

1.9 NO CONSTRUCTION SHALL BEGIN UNTIL CONFLICTING UNDERGROUND UTILITY MITIGATING CONSTRUCTION IS COMPLETED, IF ANY, AND UNTIL PIPE SLEEVES AND SERVICE STUBS TO ALL BUILDINGS OR LOTS HAVE BEEN EXTENDED.

1.10 NO EXISTING SURVEY MONUMENTATION SHALL BE REMOVED OR DISTURBED BY THE CONTRACTOR WITHOUT NOTIFICATION AND APPROVAL OF THE PROJECT SURVEYOR. THE CONTRACTOR SHALL CONTACT THE PROJECT SURVEYOR FOR THE SETTING OF REFERENCE POINTS 48 HOURS PRIOR TO DISTURBING OR REMOVING ANY MONUMENTS. THE CONTRACTOR SHALL BE FINANCIALLY RESPONSIBLE FOR COSTS TO REESTABLISH MONUMENTATION OR CONTROLS REMOVED WITHOUT PRIOR NOTICE AND APPROVAL.

1.11 TRAFFIC CONTROL SHALL CONFORM TO THE LOCAL MUNICIPAL ADOPTED STANDARDS.

1.12 THESE PLANS ARE SUBJECT TO THE INTERPRETATION OF THE INTENT BY THE ENGINEER. ANY QUESTIONS REGARDING THESE PLANS MUST BE GIVEN TO THE ENGINEER AND YOU MUST HAVE RECEIVED A RESPONSE TO THE QUESTION. ANYONE WHO TAKES IT UPON THEMSELVES TO MAKE AN INTERPRETATION OF THE DRAWINGS OR MAKES REVISIONS TO THE SAME WITHOUT CONFERRING WITH THE DESIGN ENGINEER SHALL BE RESPONSIBLE FOR THE CONSEQUENCES THEREOF.

1.13 CONTRACTOR SHALL COORDINATE HIS WORK WITH THE DESIGN ENGINEER, OWNER, PUBLIC UTILITY COMPANIES AND OTHER ASSOCIATED TRADES ON AND ADJACENT TO THE PROJECT SITE. COORDINATE INSTALLATION OF ALL PUBLIC AND PRIVATE UNDERGROUND UTILITIES, PIPES, CONDUITS AND PIPE SLEEVE SIZES AND LOCATIONS PRIOR TO THEIR PLACEMENT. INSTALLATION: THE CONTRACTOR IS RESPONSIBLE FOR SETTING CAPPED SLEEVES AND PROVIDING TYPE 1 COMPACTION IN ALL BACKFILLED TRENCHES IN PAVED AREAS AND EASEMENTS. PROVIDE TRACER WIRE AND MARKER AT GRADE LEVEL FOR FUTURE LOCATING.

1.14 CONTRACTOR SHALL BE RESPONSIBLE FOR FINANCIAL REIMBURSEMENT TO THE OWNER AND ENGINEER FOR THE FOLLOWING ADDITIONAL ENGINEERING SERVICES SHOULD THEY OCCUR, AND SUCH A/E DESIGN SERVICES WILL BE DEDUCTED FROM CONTRACTOR'S FINAL PAYMENTS BY THE OWNER.

A. REINSPECTION, COORDINATION AND EXTRA TESTING OR RETESTING COSTS INCURRED BECAUSE OF IMPROPER OR FAULTY CONSTRUCTION. ONE TIME TESTING AND INSPECTION IS PROVIDED FOR BY THE OWNER. ALL OTHER TESTING IS THE CONTRACTOR'S RESPONSIBILITY.

B. ADDITIONAL STAKING NOT INCLUDED IN CONTRACT OR RESTAKING AS REQUESTED BY CONTRACTOR.

C. CHANGES AND SUBSTITUTIONS IN MATERIALS CONSTRUCTION METHODS, REQUESTED BY THE CONTRACTOR, THAT MUST BE REVIEWED, RECALCULATED OR APPROVED BY ENGINEER.

D. ENGINEERING DESIGN SERVICES REQUESTED BY THE CONTRACTOR OR CAUSED BY ERRORS OR OMISSIONS BY THE CONTRACTOR.

E. ANY ENGINEERING DESIGN APPROVED BY OTHERS AND SUBMITTED FOR REVIEW. THESE SHALL BEAR THE SEAL OF AN ENGINEER REGISTERED IN ARIZONA.

ANY DIFFERENCE BETWEEN PLANS AND SPECIFICATIONS AND QUESTIONS AS TO THEIR MEANING SHALL BE DETERMINED PRIOR TO AWARD OF THE CONTRACT AND SHALL BE INTERPRETED BY THE ENGINEER. THE GENERAL INTENT AND MEANING OF THE PLANS AND SPECIFICATIONS WILL GOVERN AND SHALL NOT WARRANT ANY ADDITIONAL COMPENSATION TO THE CONTRACTOR. THE ENGINEER WILL PROVIDE FULL INSTRUCTIONS WHEN DISCREPANCIES ARE DISCOVERED IN THE DOCUMENTS.

1.16 THE CONTRACTOR SHALL BE RESPONSIBLE FOR VERIFYING THE LIMITS OF THE WORK AREA FOR ALL PHASES OF THE WORK PRIOR TO BEGINNING CONSTRUCTION OF THOSE PHASES. ALL CONSTRUCTION LIMITS, AREAS OF WORK, SETBACKS, PERIMETERS, ADJACENT PROPERTY LINES, BOUNDARIES, AND OTHER CRITERIA DEFINING THE LIMITS OF THE CONTRACTOR'S WORK AREA AND LIMITS, SHALL BE STAKED BY THE CONTRACTOR'S SURVEYOR PRIOR TO CONSTRUCTION OR CLEARING OF THE SITE. THE CONTRACTOR SHALL BE RESPONSIBLE FOR FAMILIARIZING HIMSELF WITH THE EXTENT OF WORK TO BE DONE IN EACH SEPARATE PHASE OF THE PROJECT, AND ANY WORK NECESSARY IN INACTIVE PHASES REQUIRED TO DEEM THE ACTIVE PHASES FINISHED, SAFE, AND SERVICEABLE.

1.17 THE CONTRACTOR OR SUBCONTRACTORS SHALL NOT DEVIATE FROM THESE PLANS OR MAKE FIELD CHANGES WITHOUT REQUESTING THE ENGINEER TO PROVIDE, IN WRITING, THE APPROVAL OF THESE MODIFICATIONS. ANY CHANGES MADE WITHOUT APPROVAL OF THE DESIGN ENGINEER ARE SUBJECT TO REMOVAL AT THE EXPENSE OF THE CONTRACTOR.

1.18 THE DESIGN ENGINEER RESERVES THE RIGHT TO MAKE MINOR FIELD MODIFICATIONS TO GRADES AND STRUCTURE DESIGNS TO ACCOMMODATE FIELD CONDITIONS FOUND ON SITE. THIS INCLUDES BUT IS NOT LIMITED TO MINOR MODIFICATIONS TO GRADE, ALIGNMENT, SLOPE OR STRUCTURE LOCATIONS. THE ENGINEER SHALL HAVE THE RIGHT TO MAKE SUCH CHANGES IN WRITING IN THE LOCATION AND QUANTITIES OF WORK AS MAY BE DEEMED ADVISABLE.

1.19 NO JOB WILL BE CONSIDERED COMPLETE UNTIL FINE GRADING IS COMPLETE AND ALL CURBS, PAVEMENT AND SIDEWALKS HAVE BEEN SWEPT CLEAN OF ALL DIRT AND DEBRIS, ALL SURVEY MONUMENTS ARE INSTALLED AND ALL VALVES, MANHOLES AND BOXES HAVE BEEN ADJUSTED ACCORDING TO THE PLANS AND STANDARD DETAILS.

1.20 EXISTING GRADES INDICATED ON PLANS ARE BASED ON PREGRADING CONDITIONS. LOSSES IN MATERIAL DUE TO SHRINKAGE OF MATERIAL, DEMOLITION OF EXISTING SITE FEATURES, CLEARING AND GRUBBING OF THE SITE SHALL BE INCLUDED IN CONTRACTOR'S BID.

1.21 SHOP DRAWINGS SHALL BE PROVIDED BY THE CONTRACTOR PER MAG SECTION 105.2.

2 PERMITS

2.1 CONTRACTOR SHALL OBTAIN ALL PERMITS AT HIS OWN EXPENSE FROM LOCAL MUNICIPAL AND AIR POLLUTION CONTROL AUTHORITIES PRIOR TO BEGINNING CONSTRUCTION.

2.2 REQUIRED PERMITS SHALL BE SECURED BY THE CONTRACTOR FROM THE APPROPRIATE AGENCIES. A.D.O.T. REQUIRES THAT A PERMIT BE ISSUED FROM THEIR OFFICE FOR ANY WORK WITHIN STATE RIGHT-OF-WAY. FEDERAL PERMITS, UTILITY CO. AND OTHER PERMITS MAY BE REQUIRED. A.D.E.Q. REQUIRES PERMITS BE ISSUED PRIOR TO NEW CONSTRUCTION, EXTENSION TO, OR MODIFICATION OF WATER DISTRIBUTION SYSTEM, SEWAGE COLLECTION OR INDIVIDUAL SEWAGE TREATMENT SYSTEM. A RIGHT-OF-WAY PERMIT, ISSUED BY THE TOWN, IS REQUIRED FOR ANY EXCAVATION OR GRADING (INCLUDING PLACEMENT OF FILL). PRIOR TO CONSTRUCTION THE APPROPRIATE AGENCIES SHALL BE NOTIFIED BY THE CONTRACTOR AS REQUIRED BY THE PERMITS.

2.3 THE CONTRACTOR SHALL BE RESPONSIBLE FOR OBTAINING AT HIS OWN EXPENSE ALL APPROPRIATE INSURANCE FORMS FOR PERMIT REQUIREMENTS.

2.4 IT SHALL BE THE RESPONSIBILITY OF THE CONTRACTOR TO ARRANGE FOR THE RELOCATION AND RELOCATION COSTS, IF ANY, OF ALL UTILITIES, AND SUBMIT A UTILITY RELOCATION SCHEDULE TO THE MUNICIPALITY AND DESIGN ENGINEER PRIOR TO CONSTRUCTION. ALL PUBLIC UTILITY EQUIPMENT POLES, BOXES, STRUCTURES AND MUNICIPAL UTILITY COMPANY EQUIPMENT SHALL BE RELOCATED BY THE APPROPRIATE UTILITY COMPANY OR MUNICIPALITY BEFORE ANY WORK IS STARTED.

3 APPROVALS

3.1 THE CONTRACTOR IS TO USE ONLY THAT OFFICIAL CONSTRUCTION SET OF DRAWINGS WHICH CONTAINS THE APPROVAL OF THE GOVERNMENT AGENCY/UTILITY SIGNED ON THE COVER SHEET OF THE PLANS. THE CONTRACTOR SHALL NOT PLACE BIDS OR START CONSTRUCTION ON A SET OF DRAWINGS UNSIGNED BY THE GOVERNMENT AGENCY AND/OR MARKED "NOT FOR CONSTRUCTION".

4 RECORD DRAWINGS

4.1 IT IS THE RESPONSIBILITY OF THE CONTRACTOR TO PROVIDE AND KEEP AN UPDATED RECORD SET OF AS-BUILT INFORMATION DRAWINGS IN GOOD CONDITION ON THE JOB SITE AND PROVIDE THE DESIGN ENGINEER AT COMPLETION OF THE WORK, WITH THE RECORD SET SHOWING FIELD VERIFIED LOCATIONS OF ALL VALVES, BOXES, MANHOLES, UTILITY POLES, PIPE SLEEVES, UTILITY ENCASEMENT AND OTHER UTILITY LINES AND EQUIPMENT ABOVE AND BELOW GROUND WHICH THE CONTRACTOR ENCOUNTERS AND INSTALLS IN HIS AREA OF WORK.

4.2 ACCEPTANCE OF THE COMPLETED PAVING, GRADING OR UTILITY INSTALLATION WILL NOT BE GIVEN UNTIL REPRODUCIBLE AS-BUILT PLANS HAVE BEEN SUBMITTED BY THE ENGINEER AND APPROVED BY THE LOCAL GOVERNING AGENCY.

5 OBSERVATION

5.1 ALL MATERIALS USED AND ALL WORK DONE BY THE CONTRACTOR SHALL BE SUBJECT AT ALL TIMES TO THE INSPECTION, TESTING AND APPROVAL OF THE ENGINEER AND GOVERNING AGENCY. SPECIAL INSPECTION AND TESTING SERVICES SHALL BE PROVIDED AT THE OWNER'S EXPENSE, AS REQUIRED BY THE TOWN ENGINEER.

5.2 THE CONTRACTOR SHALL CONTACT THE APPROPRIATE PUBLIC UTILITY COMPANIES FOR INSPECTION OF TRENCHING, BEDDING AND BACKFILLING DONE IN CONJUNCTION WITH INSTALLATION OF THOSE UTILITIES ON THIS PROJECT.

5.3 SUBMITTAL OF AN ENGINEER'S CERTIFICATE OF COMPLETION IS REQUIRED BY A.D.E.Q. FOR ALL WATER AND SEWER SYSTEM CONSTRUCTION. RELATED INSPECTION AND TESTING SHALL BE PROVIDED BY THE OWNER'S ENGINEER AT THE OWNER'S EXPENSE.

5.4 SOILS COMPACTION TEST RESULTS MUST BE SUBMITTED TO THE ENGINEER'S OFFICE FOR ALL FILL MATERIAL FOR ROADS, TRENCH BACKFILL AND SITE FILL MATERIALS UNDER SLABS AND STRUCTURES. NO FILL MATERIALS SHALL BE PLACED WITHOUT TESTING DURING PLACEMENT. NO EARTH MATERIAL SHALL BE PLACED WITHOUT APPROVAL OF THE PREVIOUS LIFTS. THE CONTRACTOR SHALL SUBMIT ALL TEST RESULTS TO THE DESIGN ENGINEER AND GOVERNMENTAL AGENCIES.

5.5 CONTRACTOR SHALL SUBMIT A SCHEDULE, APPROVED IN WRITING BY A QUALIFIED CONSULTING TESTING AGENCY, FOR FREQUENCY, LOCATION AND TYPE OF ALL PROJECT TESTING. THE CONTRACTOR WILL BE RESPONSIBLE FOR SCHEDULING AND COORDINATION OF ALL TESTING INCLUDING THE FOLLOWING ITEMS WHICH SHALL BE TESTED IN ACCORDANCE WITH MAG SPECIFICATIONS...

1. SUBGRADE COMPACTION
2. BASE COURSE COMPACTION
3. ASPHALT PAVEMENT MIX DESIGN QUALITY
4. CONCRETE STRENGTH
5. TRENCH BEDDING AND BACKFILL
6. TESTING FOR UTILITIES, PIPING AND DRAINAGE SYSTEMS

5.6 THE TOWN SHALL BE NOTIFIED BY THE CONTRACTOR 24 HOURS PRIOR TO BEGINNING DIFFERENT PHASES OF CONSTRUCTION SO THAT CITY INSPECTIONS MAY BE SCHEDULED.

6 FINAL ACCEPTANCE

6.1 FINAL ACCEPTANCE OF THE CONSTRUCTION, BY THE TOWN ENGINEER, IS REQUIRED BEFORE RELEASING OF A PERMIT AND OR TRANSFERRING OWNERSHIP OF THE IMPROVEMENTS TO THE CITY.

6.2 APPROVAL OF A PORTION OF THE WORK IN PROGRESS DOES NOT GUARANTEE ITS FINAL ACCEPTANCE. TESTING AND EVALUATION MAY CONTINUE UNTIL WRITTEN FINAL ACCEPTANCE OF A COMPLETE WORKABLE UNIT. ACCEPTANCE OF COMPLETED IMPROVEMENTS WILL NOT BE GIVEN UNTIL DEFECTIVE OR UNAUTHORIZED WORK IS REMOVED, AND FINAL CLEANUP IS COMPLETE.

7 UTILITIES

7.1 A UTILITY COORDINATION MEETING SHALL BE COORDINATED BY THE CONTRACTOR PRIOR TO THE START OF ANY WORK. ALL UTILITY ISSUES SHALL BE ADDRESSED IN ACCORDANCE WITH MAG SECTION 105.6.

7.2 LOCATION OF UNDERGROUND UTILITIES SHALL BE ACCOMPLISHED IN ACCORDANCE WITH ARS 40-360.22 PRIOR TO ANY EXCAVATION. BLUE STAKE SHALL BE CALLED AT 1-800-STAKE-IT FOR ACCURATE LOCATION OF UTILITIES AS NECESSARY AND PRIOR TO ANY EXCAVATION. UTILITIES IF INDICATED ON PLANS ARE APPROXIMATE LOCATIONS ONLY, TAKEN FROM THE UTILITY COMPANY MAPS. IF THE CONTRACTOR ENCOUNTERS ANY LINES NOT INDICATED ON THE DRAWINGS OR MARKED IN THE FIELD BY THE UTILITY COMPANY THAT MAY INTERFERE WITH HIS WORK, HE SHALL NOTIFY THE APPROPRIATE UTILITY COMPANY IMMEDIATELY FOR DISPOSITION OF THOSE FACILITIES.

7.3 THE CONTRACTOR IS RESPONSIBLE FOR PREPARATION OF GRADE, TRENCHING, BACKFILLING, PAD CONSTRUCTION AND CONCRETE PADS FOR UTILITY EQUIPMENT INSTALLED ON THIS PROJECT. CONTRACTOR SHALL CONTACT LOCAL UTILITY COMPANIES FOR DETAILS AND REQUIREMENTS.

7.4 UTILITIES MUST BE LOCATED TO MINIMIZE INTERFERENCE WITH ONE ANOTHER, TO PROVIDE REQUIRED HORIZONTAL AND VERTICAL SEPARATIONS, AND TO PROVIDE MAINTENANCE ACCESS WITHOUT VIOLATING EASEMENT BOUNDARIES. SEPARATION BETWEEN UTILITIES PER MAG STANDARD

7.5 ALL UTILITY SLEEVES SHALL BE PLACED PRIOR TO SUBBASE CONSTRUCTION AND PAVING. CONTACT APPROPRIATE UTILITY COMPANIES FOR REQUIREMENTS IN ALL AREAS.

7.6 ALL WATER MAINS, APPURTENANCES, AND INSTALLATION SHALL CONFORM TO A.W.W.A. STANDARDS AND ARIZONA DEPARTMENT OF ENVIRONMENTAL QUALITY, AND TOWN OF JEROME REQUIREMENTS. WATER SYSTEM SHALL BE TESTED PER A.D.E.Q. BULLETIN NO. 10 TO THE APPROPRIATE A.W.W.A. STANDARDS.

7.7 ALL FIRE HYDRANTS SHALL MEET ALL REQUIREMENTS OF A.W.W.A. C-509-80 AND TOWN OF JEROME REQUIREMENTS.

8 CONSTRUCTION STAKING

8.1 THE ACCURACY OF ALL CONSTRUCTION WORK SHALL BE MAINTAINED AND VERIFIED BY THE OWNER'S SURVEYOR AT THE OWNER'S EXPENSE BY PROVIDING CONSTRUCTION STAKING SUITABLE TO THE TOWN ENGINEER. STAKES WILL BE SET ESTABLISHING LINES AND GRADES (FINISH OR FLOWLINE) FOR ALL CONSTRUCTION INCLUDING ROADS, CURB AND GUTTER, SIDEWALKS, UTILITIES, STRUCTURES, AND OTHER WORK AS CONSIDERED NECESSARY BY THE ENGINEER. ALL SURVEY CONTROL SHALL BE SET BY THE OWNER'S SURVEYOR FROM MONUMENTS ACCEPTABLE TO THE ENGINEER.

9 GRADING AND EARTHWORK

9.1 PERFORM ALL EARTHWORK GRADING, CUTTING AND FILLING AS PER THE PROJECT SOILS REPORT* AND ALL ADDENDA. ALL WORK TO BE COORDINATED AS PER THE SWPPP.

9.2 NO GRADING OR TRENCHING WORK SHALL BEGIN PRIOR TO SUPPORTING AND PROTECTING EXISTING ONSITE AND ADJACENT PROPERTY FROM SETTLING, CRACKING, OR OTHER DAMAGE WHICH MIGHT RESULT. CONTRACTOR SHALL VERIFY FROM SOILS REPORT RECOMMENDATIONS THE DEGREE OF DIFFICULTY REQUIRED FOR TRENCHING AND EXCAVATION WORK BASED ON DEPTH AND TYPES OF MATERIALS TO BE ENCOUNTERED.

9.3 WATER SOURCE: THE CONTRACTOR SHALL MAKE THE NECESSARY ARRANGEMENTS FOR OBTAINING ALL WATER REQUIRED FOR SOIL COMPACTION, DRINKING PURPOSES AND DUST CONTROL. (MAG SPEC 225)

9.4 CLEARING AND GRUBBING: EXAMINE SITE AND PROVIDE NECESSARY EQUIPMENT AND LABOR TO REMOVE FROM THE SITE AND DISPOSE OF STUMPS, ROOTS, ROCKS, LOOSE FILL, VEGETATION, DEBRIS, AND ANY OTHER OBJECTIONABLE MATERIALS FROM THE BUILDING AND FILL AREAS. CLEAN, UNCLASSIFIED ONSITE SOILS MAY BE USED IN GENERAL AS FILL MATERIAL. SEE MAG SPECIFICATION SECTIONS 201 AND 215.

9.5 TOPSOIL THAT WILL BE AFFECTED BY ROUGH GRADING OR EXCAVATION SHALL BE STOCKPILED ON THE SITE SEPARATELY AND SHALL NOT BE USED FOR FILL, BUT SHALL BE CONSERVED AND USED FOR FINE AND FINISH GRADING.

9.6 SITE DRAINAGE: CONSTRUCTION OF ALL SWALES, CHANNELS, DRAINAGE PIPES, DRAINAGE STRUCTURES AND BANK PROTECTION SHALL BE CONSTRUCTED DURING THE FIRST PHASES OF SITE CONSTRUCTION TO PROTECT ALL OTHER CONSTRUCTION FROM SURFACE WATERS. DIVERT RUN OFF WATER AROUND CONSTRUCTION OPERATIONS. CARE SHALL BE TAKEN BY THE CONTRACTOR NOT TO ADVERSELY AFFECT ADJACENT PROPERTIES. DRAIN EXCAVATIONS BY PUMPING OR OTHER SATISFACTORY METHOD TO PREVENT SOFTENING OF THE FOUNDATION SOILS, UNDERCUTTING OF FOOTINGS, OR OTHER ACTIONS DETRIMENTAL TO PROPER CONSTRUCTION PROCEDURES. ALL WORK TO BE COORDINATED AS PER THE SWPPP.

9.7 THE CONTRACTOR SHALL PROVIDE POSITIVE DRAINAGE AWAY FROM ALL WALLS AND FOUNDATIONS. ALL STORM DRAINS, DRAIN LINES, OVERFLOWS, OUTLETS, AND/OR OTHER DRAINAGE TYPE OUTLETS WHICH CONDUCT MOISTURE NEAR THE STRUCTURES SHALL BE POSITIVELY DRAINED AWAY FORM THE STRUCTURE. NO WATER SHALL BE PERMITTED TO POND NEAR STRUCTURES OR FOUNDATIONS. ALL DRAINAGE SHALL BE CHANNELED AND TAKEN A MINIMUM OF 10 FEET AWAY FROM ALL STRUCTURES.

9.8 SUBGRADE PREPARATION: IF THE NATURAL SUBGRADE IS LESS THAN THE REQUIRED DENSITY, IT SHALL BE SCARIFIED AND COMPACTED TO A MINIMUM DEPTH OF TWELVE INCHES OR AS NOTED IN THE SOILS REPORT IMMEDIATELY PRIOR TO PLACING SUBSEQUENT FILL MATERIAL THEREON. THE CONTRACTOR IS RESPONSIBLE FOR MAINTENANCE AND REPAIR OF DAMAGE TO PREPARED SUBGRADE CAUSED BY CONTRACTORS OPERATIONS OR PUBLIC TRAFFIC UNTIL ACCEPTANCE OF PROJECT. NO MATERIALS SHALL BE PLACED UPON THE PREPARED SUBGRADE UNTIL IT MEETS THE SPECIFIED REQUIREMENTS. ROADWAY SUBGRADE COMPACTION INCLUDES SUBGRADE UNDER ALL PAVEMENT, CURB, SIDEWALKS, SHOULDERS AND FILL SLOPES. SUBGRADE TOLERANCES SHALL BE AS SPECIFIED IN MAG SECTION 301. OPEN LANDSCAPED AREAS SHALL BE GRADED TO +/- 0.20 FEET.

9.9 EARTH FILL: AREAS TO BE FILLED SHALL BE LEVELED TO PROVIDE A LEVEL BASE TO SUPPORT FILL MATERIALS. SUBGRADE AND SUBBASE AREAS REQUIRING FILL MATERIAL SHALL BE SCARIFIED MOISTENED AND COMPACTED PRIOR TO PLACING FILL. ALL FILL, SUBGRADE AND SUBBASE MATERIALS SHALL BE COMPACTED TO SPECIFIED DENSITIES AT OR NEAR OPTIMUM MOISTURE CONTENTS AS VERIFIED AND RECOMMENDED BY THE SOILS ENGINEER. PLACE FILL IN HORIZONTAL LIFTS NOT EXCEEDING EIGHT INCHES IN LOOSE THICKNESS BEFORE COMPACTION. SLOPED SURFACES SHALL BE PLOWED, STEPPED, AND BENCHED SO THAT THE FILL MATERIAL WILL BOND WITH THE EXISTING MATERIAL. BENCH AT THE TOE OF FILL SLOPES AND PERIODIC INTERVALS UP THE FILL SLOPES BENCHES.

9.10 IT IS THE RESPONSIBILITY OF THE CONTRACTOR TO CONTACT THE TESTING COMPANY FOR SCHEDULING OF COMPACTION TESTING. THE FREQUENCY OF DENSITY AND MOISTURE TESTS REQUIRED FOR ADEQUATE CONTROL SHALL BE THE RESPONSIBILITY OF THE SOILS ENGINEER WHO SHALL CERTIFY TO THE ENGINEER AND CONTRACTOR AT PROJECT END THAT THE ROADBED FILL IS COMPACTED AS OUTLINED HEREIN. COMPACTION SHALL BE ACHIEVED BY MECHANICAL MEANS. IN NO CASE SHALL STRUCTURE BACKFILLING BE FLOOD WATER SETTLED.

9.11 ALL SLOPE CONSTRUCTION AND ROADWAY EXCAVATION SHALL CONFORM TO THE REQUIREMENTS OF MAG SPECIFICATIONS SECTIONS 201, 205, 211, 301, AND UBC SECTIONS 7009 AND 8010. CUT AND FILL SLOPES SHALL BE AS INDICATED ON THE DETAILS AND PLANS. CUT AND FILL SLOPE GRADIENTS SHALL NOT EXCEED 2:1 IN STEEPNESS WITHOUT WRITTEN AUTHORIZATION FROM THE SOILS ENGINEER AND EXAMINATION BY THE DESIGN ENGINEER. ALL SLOPE CONDITIONS SHALL BE PROVIDED WITH THE APPROPRIATE BENCHES AS SPECIFIED IN THE REFERENCE DOCUMENTS AND INDICATED ON THE PLANS. IF SOILS CONDITIONS ARE ENCOUNTERED WHICH DO NOT ALLOW THE ESTABLISHMENT OF THE INDICATED CUT OR FILL SLOPES, THE DESIGN ENGINEER AND SOILS ENGINEER SHALL BE CONTACTED IMMEDIATELY TO DETERMINE AN ADJUSTMENT TO THE SLOPE GRADIENT OR TO ESTABLISH A METHOD OF STABILIZATION ALL FILL SLOPES SHALL BE COMPACTED AS EACH LIFT OF FILL MATERIAL IS PLACED. ALL CUT AND FILL SLOPES SHALL BE UNIFORMLY GRADED TO LINES AND GRADES INDICATED. TOPS OF ALL CUT SLOPES SHALL BE ROUNDED AND ALL UNSTABLE AND LOOSE MATERIAL AT TOP OF SLOPE SHALL BE REMOVED. TOP OF CUT SLOPES OVER 10' HIGH SHALL BE PROVIDED WITH BROW DITCHES FOR DRAINAGE. ALL CUT AND FILL SLOPES SHALL BE REVEGETATED WITH A MIXTURE OF NATIVE GRASSES AND WILD FLOWER SEED OR AS SPECIFIED WITHIN THE LANDSCAPE PLANS. COMPACT ALL SHOULDERS AND BACKFILLS BEHIND ALL STRUCTURE AND WALLS.

9.12 COMPACT TO THE FOLLOWING SPECIFIED PERCENT OF MAXIMUM DENSITY AS DETERMINED IN ACCORDANCE WITH ASTM D698 AND MAG SECTION 211 OR AS DIRECTED IN THE SOILS REPORT.

MINIMUM PERCENT COMPACTION
SUBGRADE SOIL:
ROADWAY AND STRUCTURE AREAS----------95
PAVED AREAS (PAVEMENTS, SIDEWALKS, & PADS)---------95
EARTH FILL:
ROADWAY AND STRUCTURE AREAS----------95
PAVED AREAS (PAVEMENTS, SIDEWALKS, & PADS)---------95
GRASSED AND PLANTING AREAS----------85
AGGREGATE BASE COURSE----------100
BACKFILL AROUND STRUCTURES----------95
BACKFILL FOR UTILITY TRENCHES (PER MAG SECTION 601). PROVIDE TYPE 1 BACKFILL OR AS DIRECTED BY APPROPRIATE UTILITY REQUIREMENTS. BACKFILL FOR TRENCHES WITHIN 10' OF STRUCTURES AND WALLS SHALL BE COMPACTED TO 95% UNLESS DIRECTED OTHERWISE BY ENGINEER.

9.13 EXCAVATION: EXCAVATE TO THE DIMENSIONS AND DEPTHS INDICATED ON THE DRAWINGS. FOUNDATIONS SHALL REST ON ENGINEERED COMPACTED FILL OR UNDISTURBED NATURAL SOILS AT GRADE ELEVATIONS INDICATED. IF SUITABLE SOIL IS NOT REACHED AT THE DEPTHS INDICATED, THE CONTRACTOR SHALL IMMEDIATELY NOTIFY THE SOILS ENGINEER AND ENGINEER. THE CONTRACTOR WILL BE DIRECTED, IN WRITING, TO EXCAVATE TO THE DEPTH OF SUITABLE SOIL. EXCAVATION FOR FOUNDATIONS WHICH ARE CARRIED BELOW THE DEPTHS INDICATED SHALL HAVE THE CONCRETE EXTENDED TO THE BOTTOM OF THE EXCAVATION AT THE CONTRACTOR'S EXPENSE. SEE MAG SPECIFICATION SECTION 206.

9.14 WATERING: CAREFULLY WATER EARTH FILL DURING PLACING BY MEANS OF A FINE SPRAY OR OTHER APPROVED METHOD, SO THAT EACH LAYER IS THOROUGHLY AND UNIFORMLY WETTED. MOISTURE CONTENT OF THE MATERIAL SHALL BE CAREFULLY CONTROLLED AT ALL TIMES AND CHECKED AT PROPER INTERVALS TO INSURE CORRECT MOISTURE FOR COMPACTION SPECIFIED. SEE MAG SECTION 225 AND SOILS REPORT.

10 PAVING

10.1 COMPLETE ASPHALTIC CONCRETE PAVEMENT INSTALLATION SHALL INCLUDE BUT NOT BE LIMITED TO THE FOLLOWING:
A. TACK COATING OF ALL SURFACES, UNDILUTED .02 TO .10 GAL/SY, DILUTED 1:1 MIXTURE, .05 TO .15 GAL/SY, OR AS DIRECTED.
B. SEAL COATING: SEAL COATING WITHIN THE RIGHT-OF-WAY SHALL BE A FOG SEAL COAT.
C. PAINT FOR PAVEMENT STRIPING AND MARKING SHALL CONFORM TO FEDERAL SPEC. NO. TTP-155E, "PAINT, TRAFFIC, HIGHWAY, WHITE AND YELLOW". COLORS FOR PAVEMENT MARKING AND STRIPING SHALL BE AS SPECIFIED BY THE TOWN ENGINEER.
D. TRAFFIC CONTROL DEVICES: SIGNS AND PAVEMENT MARKINGS SHALL CONFORM TO "MANUAL ON UNI

11 FIELD INSPECTION

11.1 THE CONTRACTOR SHALL CAREFULLY PRESERVE ALL STAKES, REFERENCE AND CONTROL POINTS, ETC. AGAINST DESTRUCTION AND SHALL PROMPTLY NOTIFY THE ENGINEER OF ANY STAKES WHICH HAVE BEEN DISTURBED.

11.2 OWNER'S REGISTERED SURVEYOR SHALL BE NOTIFIED TWO WORKING DAYS (48 HOURS) MINIMUM PRIOR TO FIELD STAKING SCHEDULING.

11.3 ANY QUESTIONS RAISED RELATIVE TO ACCURACY OF IMPROVEMENT INSTALLATION SHALL NOT BE RAISED SUBSEQUENT TO COMPLETION OF THE WORK UNLESS ALL SURVEY STAKES ARE MAINTAINED INTACT. SHOULD SUCH STAKES NOT BE PRESENT AND VERIFIED AS TO THEIR ORIGIN, NO CLAIM FOR ADDITIONAL COMPENSATION FOR CORRECTION SHALL BE PRESENTED TO ANY PARTY AND SUCH WORK SHALL BE CORRECTED BY THE CONTRACTOR AT HIS EXPENSE.

12 SUSPENSION OF WORK

12.1 THE ENGINEER OR HIS AUTHORIZED REPRESENTATIVE MAY SUSPEND THE WORK BY WRITTEN NOTICE WHEN, IN HIS JUDGMENT, PROGRESS IS UNSATISFACTORY, WORK BEING DONE IS UNAUTHORIZED OR DEFECTIVE, WEATHER CONDITIONS ARE UNSUITABLE, OR THERE IS DANGER TO THE PUBLIC HEALTH OR SAFETY.

13 WARRANTY

13.1 ANY DEFECTS WHICH APPEAR IN THE WORK WITHIN TWO YEARS FROM THE DATE OF ACCEPTANCE AND WHICH ARE DUE TO IMPROPER WORKMANSHIP OR INFERIOR MATERIALS SUPPLIED SHALL BE CORRECTED BY OR AT THE EXPENSE OF THE CONTRACTOR.

14 EROSION CONTROL NOTES

(SPECIFICATIONS FOR PERMANENT SEEDING)

14.1 SITE PREPARATION
- A. INSTALL NECESSARY SURFACE WATER CONTROL MEASURES PRIOR TO PLANTING PERMANENT SEEDING.
- B. GRADE TO PERMIT USE OF CONVENTIONAL EQUIPMENT FOR SEEDBED PREPARATION.
- C. PROVIDE ADEQUATE DRAINAGE WHERE INTERNAL WATER MOVEMENT, ESPECIALLY AT TOES OF SLOPES, MAY CAUSE SEEPS OR SLIPPAGE BEFORE SEEDING IS WELL ESTABLISHED.

14.2 SEEDBED PREPARATION A. AS PRACTICAL, PERFORM ALL CULTURAL OPERATIONS AT RIGHT ANGLES TO THE SLOPE. B. IMMEDIATELY BEFORE SEEDING, RAKE OR OTHERWISE LOOSEN PLANTING SURFACE TO PROVIDE A SMOOTH, FRIABLE SURFACE FREE OF EARTH CLODS, HUMPS AND DEPRESSIONS, AND DISPOSE OF LOOSE STONES HAVING A DIMENSION GREATER THAN ONE INCH AND DEBRIS BROUGHT TO THE SURFACE DURING CULTIVATION.

14.3 PLANTING A. APPLY SEED MIX AT THE RATE OF 11 POUNDS PER ACRE. SHALL CONTAIN THE FOLLOWING PROPORTION OF PURE LIVE SEED: SAND DROPSEED (SPOROBOLUS CRYPTANDRUS) 1 LB SIDEOATS GRAMA (BOUTELOUS CURTIPENDULA)5 LB CRESTED WHEATGRASS (AGROPYRON CRISTATUM) 5 LB B. APPLY SEED IN TWO DIRECTIONS AT RIGHT ANGLES TO EACH OTHER WITH HALF THE SPECIFIED APPLICATION RATE APPLIED IN EACH DIRECTION. C. IMMEDIATELY AFTER SEEDING, UNIFORMLY SPREAD SCREENED MANURE AT THE RATE OF ONE CUBIC YARD PER 1000 SQUARE FEET AND WATER UNTIL THE GROUND IS WET TO A MINIMUM DEPTH OF TWO INCHES. D. HYDRAULIC SEEDING USING 1500 POUNDS OF WOOD CELLULOSE FIBER PER ACRE MAY BE UTILIZED IN LIEU OF PLANTING.

14.4 MAINTENANCE A. PROTECT PLANTED AREAS FROM GRAZING, FIRE, TRAFFIC, AND WEED GROWTH. B. MAINTAIN PLANTED AREAS UNTIL A GOOD STAND OF GRASS IS ESTABLISHED. AREAS AS REQUIRED IF NO GROWTH IS PRESENT WITHIN 15 DAYS OF PLANTING.

15 TEMPORARY EROSION CONTROL

15.1 EROSION CONTROL BERMS AND ROCK CHECK DAMS
- A. PROVIDE EARTHEN BERMS AT TOES OF SLOPES REMAINING BARE BETWEEN CONSTRUCTION PHASES.
- B. PLACE TEMPORARY ROCK CHECK DAMS IN ROAD DITCHES AND CHANNELS IF RIP-RAP PROTECTION WILL NOT BE PROVIDED WITHIN 60 DAYS.

15.2 CONTRACTOR SHALL BE RESPONSIBLE FOR PROVIDING EROSION CONTROL MEASURES SUCH AS SAND BAGGING, TEMPORARY DE-SILTING BASIN CONSTRUCTION BERMS, VISQUEEN, ETC. TO PROTECT ADJOINING PROPERTIES FROM EROSION.

16 GENERAL CONSTRUCTION NOTES

16.1 ALL CORRUGATED METAL PIPE TO BE 14 GAUGE, UNLESS OTHERWISE APPROVED BY THE DESIGN ENGINEER.

16.2 ALL CORRIGATED METAL PIPE SHALL HAVE FLARED END SECTIONS, EXCEPT WHERE HEADWALLS ARE USED.

16.3 ALL DRAINAGE CULVERTS AND PIPES SHALL HAVE A MINIMUM COVER OF 24" OR AS SPECIFIED.

16.4 ADDITIONAL CARE SHALL BE TAKEN TO PROTECT ALL CMP DURING CONSTRUCTION.

16.5 RETAINING WALLS SHALL BEAR ONTO NATURAL BEDROCK, OR COMPACTED SOIL WHICH HAS A BEARING VALUE OF 3,000 P.S.F. VERIFICATION OF SAID BEARING VALUE TO BE PROVIDED BY THE SOILS ENGINEER.

16.6 RIPRAP MATERIAL SHALL BE AS SPECIFIED TO A DEPTH OF TWICE THE SIZE OF Dso UNDER LAYING A FILLER LAYER OF Dso =3/4" TO A DEPTH OF 10" OR GEOTEXTILES. THE GRADATION OF RIPRAP SHOULD FOLLOW A SMOOTH CURVE. THE RATIO TO THE LARGEST SIZE ROCK TO Dso SHOULD BE EQUAL TO OR LESS THAN 2 (Dso/Dso ~0.5). THE RIPRAP SHOULD BE HARD, DENSE, DURABLE AND RESISTANT TO WEATHER AND FRACTURE. ALL RIPRAP TO BE HAND PLACED IN AN INTERLOCKING POSITION. FILLER MATERIAL TO BE WELL GRADED GRAVEL AS SPECIFIED. MATERIAL FURNISHED FOR RIPRAP SHALL CONFORM TO MAG SPEC 220.2.

16.7 ALL CONCRETE AND REBAR PLACEMENT PER MAG SPEC 505.

16.8 CONCRETE TESTING PER MAG SPEC 725.

16.9 ALL CONCRETE TO BE CLASS B (2500PSI) IF NOT SPECIFIED.

16.10 MINIMUM COVER ON ALL REBAR TO BE MIN 1" UNLESS OTHERWISE SPECIFIED.

16.11 MINIMUM LAP AT REBAR SPLICES TO BE 1' UNLESS OTHERWISE SPECIFIED.

16.12 ALL MANHOLE FRAMES TO HAVE 12" ANCHORS SPACED A MINIMUM OF 12" RADIALLY AROUND FRAME.

16.13 CONCRETE FOR FOOTINGS AND PADS AHALL BE CLASS A (3000 PSI)

SURVEY

1. TOPOGRAPHIC SURVEY BY KENNEY AERIAL MAPPING, INC., PHOENIX, AZ, DATED NOVEMBER 2022 AND SUPPLEMENTED IN FEBRUARY 2023. ADDITIONAL TOPOGRAPHIC SURVEY DATA PERFORMED BY SEC, INC. COORDINATES ARE RELATIVE TO NAD 83, AZ STATE PLANE CENTRAL ZONE, INTERNATIONAL FEET. ELEVATIONS RELATIVE TO NAVD 83. SURVEY CONTROL ON SHEET C2.0.

TREE NOTES

1. ALL EXISTING TREES AND SHRUBS NOT AFFECTED BY BUILDING CONSTRUCTION OR ROAD DEVELOPMENT MUST BE FENCED WITH A CONSTRUCTION ENVELOPE FENCE TO PROTECT THEM DURING CONSTRUCTION

2. NO TREES TO BE PLACED OVER/ON SEWER LINE

ADEQ WATER AND SEWER SYSTEM NOTES

MANHOLES

ALL MANHOLES SHALL BE 4-FT. ID PRECAST CONCRETE WITH POURED-IN-PLACE CONCRETE BASE AND TRAFFIC BEARING RING AND COVER. ALL COVERS SHALL BE 2-FT. IN DIAMETER AND SHALL BE MARKED "SEWER". TEST MANHOLES FOR WATER TIGHTNESS (INFILTRATION) PER R 18-9-E301.4.01.D.3.F. WATER TIGHTNESS SHALL BE TESTED BY EITHER 1) FILLING THE MANHOLE WITH WATER AND ENSURING THAT THE DROP IN WATER LEVEL DOES NOT EXCEED 0.0034 OF THE TOTAL MANHOLE VOLUME PER HOUR, OR 2) AIR PRESSURE TESTING USING THE "STANDARD TEST METHOD FOR CONCRETE SEWER MANHOLES BY NEGATIVE AIR PRESSURE (VACUUM) TEST", ASTM C1244-02a1 (2002). TEST 100% OF ALL MANHOLES. MANHOLES SHALL CONFORM TO A.D.E.Q. AND M.A.G. SPECIFICATIONS. CONSTRUCTION SHALL CONFORM TO M.A.G. STD. DTLS. 420-1 AND 420-2.'

CONCRETE

CLASS A CONCRETE SHALL HAVE A MINIMUM 28 DAY COMPRESSIVE STRENGTH OF 2000 PSI.

PIPE

GRAVITY SEWER PIPE SHALL BE PVC, SDR-26 AND CONFORM TO ASTM D-1784 AND ASTM D-3034. SEALS SHALL CONFORM TO ASTM F-477. PIPE SHALL BE JOINED BY BELL AND SPIGOT TYPE JOINTS. FITTINGS SHALL CONFORM TO ASTM D-3212. GRAVITY SEWER PIPE SHALL BE TESTED FOR DEFLECTION AND LEAKAGE. SHORT TERM DEFLECTION TESTING SHALL BE PERFORMED AFTER COMPLETE BACKFILL BUT PRIOR TO INSTALLATION OF FINISH SURFACE MATERIAL. A SHORT TERM DEFLECTION IN EXCESS OF 5% SHALL BE CONSIDERED UNACCEPTABLE AND PIPE SHALL BE REPAIRED, OR REPLACED AND RETESTED. A MINIMUM OF 100% OF GRAVITY SEWER SHALL BE DEFLECTION TESTED. SEWER PIPE SHALL BE TESTED FOR LEAKAGE USING LOW PRESSURE AIR TESTING PER "STANDARD TEST METHOD FOR INSTALLATION ACCEPTANCE OF PLASTIC GRAVITY SEWER LINES USING LOW PRESSURE AIR", ASTM F 1417-92, REAPPROVED 1998. TEST 100% OF ALL SEWER LINES. TEST THE TOTAL LENGTH OF THE SEWER LINE FOR UNIFORM SLOPE BY LAMP LIGHTING, REMOTE CAMERA OR SIMILAR METHOD APPROVED BY ADEQ AND RECORD THE RESULTS.

DUCTILE IRON PIPE SHALL BE AWWA C-150, CLASS 350 AND SHALL BE TESTED FOR LEAKAGE PER AWWA STANDARD C-600.

A MINIMUM HORIZONTAL DISTANCE OF 6-FT SHALL BE MAINTAINED BETWEEN MAINS AND GRAVITY SEWERS.

MATERIAL

ALL MATERIALS & PRODUCTS THAT COME INTO CONTACT WITH DRINKING WATER OR DRINKING WATER TREATMENT CHEMICALS MUST COMPLY WITH AWWA STANDARDS & NSF STANDARD 61. ANY "OR EQUAL' SUBSTITUTION SHALL ALSO MEET NSF STANDARD 61.

ALL MATERIALS USED IN THE INSTALLATION OF WATER MAINS SHALL BE PURSUANT TO AAC R-18-4-119, & SHALL BE NSF APPROVED FOR POTABLE WATER.

DISINFECTION

WATER MAINS. SHALL BE DISINFECTED IN ACCORDANCE WITH ADEQ ENGINEERING BULLETIN NO.8 "DISINFECTION OF WATER SYSTEMS".

TESTING

ONE HUNDRED PERCENT (100%) OF PIPE LINES SHALL BE PRESSURE AND LEAK TESTED IN ACCORDANCE WITH AWWA C-600, SECTION 4 AND MAG SECTION 611. MINIMUM TEST PRESSURES SHALL BE 200 PSI PLUS ALLOWANCE FOR WATER HAMMER.

AFTER PRESSURE AND LEAK TESTING IS SHOWN TO BE SATISFACTORY, WATER LINES SHALL BE DISINFECTED BY CHLORINATION IN ACCORDANCE WITH AWWA C-601, MAG SECTION 610.15, AND ADEQ BULLETIN 8. ALL VALVES SHALL BE WORKED INTERMITTENTLY FOR A PERIOD OF 24 HOURS FOLLOWING CHLORINATION.

WATER SYSTEM THRUST BLOCKING AND/OR JOINT RESTRAINT

PIPE LINES SHALL BE PROVIDED WITH CONCRETE THRUST BLOCKS AT ALL CHANGES IN DIRECTION AND SIZE AND AT ALL TEES, VALVES, PLUGS, AND DEAD ENDS, PER MAG STANDARD DETAILS 301 AND 380 AND YAG STANDARD DETAIL 3-03. PIPE LINES MAY ALSO BE PROVIDED WITH RESTRAINED JOINTS AT ALL CHANGES IN DIRECTION AND SIZE AND AT ALL TEES, VALVES, PLUGS, AND DEAD ENDS, PER MAG STANDARD DETAILS 302 AND 303.

ADEQ WATER & SEWER NOTES (CONT.)

TRENCHING AND BACKFILLING

ROUGH GRADING SHALL BE COMPLETED PRIOR TO INSTALLATION OF UNDERGROUND UTILITIES.

TRENCH BOTTOM SHALL BE COMPACTED BY SUITABLE MEANS APPROVED BY THE ENGINEER PRIOR TO PLACEMENT OF BEDDING MATERIAL. BEDDING MATERIAL SHALL BE PLACED TO PROVIDE UNIFORM AND ADEQUATE LONGITUDINAL SUPPORT UNDER THE PIPE. THE CONTRACTOR SHALL ENSURE THAT A MINIMUM COMPACTED DEPTH OF 6" IS MAINTAINED UNDERNEATH THE PIPE. BELL HOLES SHOULD BE PROVIDED AT EACH JOINT TO PERMIT PROPER ASSEMBLY WHILE MAINTAINING UNIFORM SUPPORT.

BEDDING MATERIAL SHALL BE ROUNDED GRAVEL WITH A MAXIMUM PARTICLE SIZE OF 1 1/2" AND SHALL BE NON-PLASTIC. WHERE DEPTH OF COVER IS 2-FT. OR LESS, BACKFILL MATERIAL SHALL BE ROUNDED GRAVEL WITH A MAXIMUM PARTICLE SIZE OF 4" AND WITH NO MORE THAN 20% PASSING THE #200 SIEVE.

BACKFILL SHALL BE PLACED IN LAYERS OF NOT MORE THAN 8" LOOSE DEPTH AND COMPACTED TO ACHIEVE COMPACTION OF 95% OF THE MAXIMUM DENSITY AS DETERMINED BY AASHTO T-99 AND T-191 OR ASTM D-2922 AND D-3017. THE CONTRACTOR SHALL CONTRACT WITH AN INDEPENDENT TESTING LABORATORY TO PROVIDED COMPACTION TESTING. TESTS SHALL BE PROVIDED AT MINIMUM INTERVALS OF ONE TEST PER 50 CUBIC YARDS OF TRENCH BACKFILL. TEST RESULTS SHALL BE SUBMITTED DAILY TO THE ENGINEER.

TRENCHING, PIPELAYING, BACKFILLING, AND ALL OTHER CONSTRUCTION SHALL BE PERFORMED UNDER THE INSPECTION, COORDINATION, AND SUPERVISION OF A REGISTERED PROFESSIONAL CIVIL ENGINEER.

NO TRENCH SHALL BE FILLED WITH BEDDING MATERIAL OR BACKFILL UNTIL THE EXCAVATION AND PIPE LAYING, RESPECTIVELY, HAVE BEEN APPROVED BY THE OWNER OR HIS AUTHORIZED REPRESENTATIVE.

THE EXCAVATION METHOD EMPLOYED SHALL BE THE CONTRACTOR'S OPTION. MATERIAL SHALL NOT BE STOCKPILED TO A DEPTH OF MORE THAN 5 FEET ABOVE FINISHED GRADE WITHIN 25 FEET OF ANY EXCAVATION OR STRUCTURE. EXCAVATION SHALL EXTEND SUFFICIENT DISTANCE FROM WALLS AND FOOTINGS TO ALLOW PLACING AND REMOVAL OF FORMS, INSTALLATION OF SERVICES AND INSPECTION BY THE ENGINEER. WITHIN 12" OF FINISHED GRADE SHOWN ON THE DRAWINGS, AND FOR THE MANHOLES, FILL AND BACKFILL SHALL BE NATIVE MATERIAL, FEE FROM BROKEN CONCRETE, ORGANIC MATERIAL, OR OTHER DEBRIS WITH SUFFICIENT FINES TO FILL ALL VOIDS AND TO INSURE A UNIFORMLY COMPACTED MASS OF THE REQUIRED DENSITY AND HAVING A MAXIMUM SIZE OF 2 - ½ INCHES WITH 0 TO 20% MINUS #200. ALL FILL AND BACKFILL SHALL BE PLACED IN LAYERS OF NOT MORE THAN 8" LOOSE AND COMPACTED TO 95% OF MAXIMUM DENSITY, DETERMINED BY AASHTO TEST METHOD T-99, PRIOR TO PLACEMENT OF THE NEXT LAYER.

WATER AND SEWER SYSTEM DESIGN: MINIMUM DESIGN CRITERIA

WATER AND SEWER MAINS SHALL BE SEPARATED IN ORDER TO PROTECT PUBLIC WATER SYSTEMS FROM POSSIBLE CONTAMINATION. ALL DISTANCES ARE MEASURED PERPENDICULARLY FROM THE OUTSIDE OF THE SEWER MAIN TO THE OUTSIDE OF THE WATER MAIN. SEPARATION REQUIREMENTS ARE AS FOLLOWS:
1. A WATER MAIN SHALL NOT BE PLACED:
A. WITHIN SIX FEET, HORIZONTAL DISTANCE, AND BELOW TWO FEET, VERTICAL DISTANCE, ABOVE THE TOP OF A SEWER MAIN UNLESS EXTRA PROTECTION IS PROVIDED. EXTRA PROTECTION SHALL CONSIST OF CONSTRUCTING THE SEWER MAIN WITH MECHANICAL JOINT DUCTILE IRON PIPE OR WITH SLIP-JOINT DUCTILE IRON PIPE IF JOINT RESTRAINT IS PROVIDED. ALTERNATE EXTRA PROTECTION SHALL CONSIST OF ENCASING BOTH THE WATER AND SEWER MAINS IN AT LEAST SIX INCHES OF CONCRETE FOR AT LEAST TEN FEET BEYOND THE AREA COVERED BY THIS SUBPARAGRAPH.
B. WITHIN TWO FEET HORIZONTALLY AND TWO FEET BELOW THE SEWER MAIN.
2. NO WATER PIPE SHALL PASS THROUGH OR COME INTO CONTACT WITH ANY PART OF A SEWER MANHOLE. THE MINIMUM HORIZONTAL SEPARATION BETWEEN WATER MAINS AND MANHOLES SHALL BE SIX FEET, MEASURED FROM THE CENTER OF THE MANHOLE.
3. THE MINIMUM SEPARATION BETWEEN FORCE MAINS OR PRESSURE SEWERS AND WATER MAINS SHALL BE TWO FEET VERTICALLY AND SIX FEET HORIZONTALLY UNDER ALL CONDITIONS. WHERE A SEWER FORCE MAIN CROSSES ABOVE OR LESS THAN SIX FEET BELOW A WATER LINE, THE SEWER MAIN SHALL BE ENCASED IN AT LEAST SIX INCHES OF CONCRETE OR CONSTRUCTED USING MECHANICAL JOINT DUCTILE IRON PIPE FOR TEN FEET ON EITHER SIDE OF THE WATER MAIN.

TOPO FEATURES

- EXISTING SANITARY SEWER w/SIZE
- GUARDRAIL
- WASH
- RETAINING WALL
- DIRT ROAD
- PROPERTY LINE
- OVERHEAD POWER LINE w/POLE
- FENCE LINE
- UNKNOWN EXPOSED PIPE
- CULVERT
- MANHOLE
- AERIAL SURVEY PANEL PT
- SIGN
- POST
- GATE
- TREE OR BUSH

LEGEND
PROPOSED DEVELOPMENT

- CENTER LINE/BASE LINE
- RIP RAP
- FENCE
- GUARD RAIL
- SAFETY RAIL
- CULVERT
- DRAINAGE FLOWLINE
- RETAINING WALL
- SIGNS
- DRAINAGE FLOW DIRECTION

LEGEND
PROPOSED SANITARY SEWER

- PRESSURE SEWER MAIN
- GRAVITY SEWER MAIN
- SEWER MANHOLE
- SEWER CLEANOUT

LEGEND
PROPOSED WATER

- WATER MAIN
- WATER METER
- AIR RELEASE VALVE
- BLOW OFF VALVE
- GATE VALVE
- FIRE HYDRANT w/VALVE
- BACKFLOW PREVENTOR VALVE
- WELL
- IRRIGATION CONTROL VALVE
- PIPE END CAP

LEGEND
PROPOSED ELECTRIC/GAS/TV/TEL

- OVERHEAD POWER
- UNDERGROUND POWER
- GAS
- TELEPHONE
- COMMON UTILITIES (TV,TEL)
- TELEVISION
- UTILITY POLE
- TELEPHONE RISER
- CABLE T.V. RISER
- GAS METER
- ELECTRIC METER
- ELECTRIC TRANSFORMER
- GUY WIRE

ABBREVIATIONS

LF	LINEAR FEET
ADOT	ARIZONA DEPT. OF TRANSPORATION
ADEQ	ARIZONA DEPT. OF ENVIRONMENTAL QUALITY
MAG	MARICOPA ASSOCIATION OF GOVERNMENTS
MSD	MARICOPA ASSOCIATION OF GOVERNMENTS STANDARD DETAIL
MUTCD	MANUAL OF UNIFORM TRAFFIC CONTROL DEVICES
FF	FINISHED FLOOR ELEVATION
EG	EXISTING GRADE
FG	FINISHED GRADE
TW	FINISHED GRADE AT TOP BACK OF WALL
BW	FINISHED GRADE AT BOTTOM FACE OF WALL
INV	INVERT
FL	FLOW LINE
AB	AGGREGATE BASE COURSE
DG	DECOMPOSED GRANITE
ADA	AMERICANS WITH DISABILITIES ACT
ARV	AIR RELEASE VALVE
BOV	BLOW-OFF VALVE
PVI	POINT OF VERTICAL INTERSECTION
DIP	DUCTILE IRON PIPE
PVC	POLYVINYL CHLORIDE
FPVC	FUSIBLE POLYVINYL CHLORIDE
CMP	CORRUGATED METAL PIPE
HDPE	HIGH DENSITY POLYETHYLENE
EP OR EOP	EDGE OF PAVEMENT
SEC	SOUTHWESTERN ENVIRONMENTAL CONSULTANTS, INC
STA	STATION
TBD	TO BE DETERMINED
VC	VERTICAL CURVE
WWTP	WASTE WATER TREATMENT PLANT
NTS	NOT TO SCALE
SF	SQUARE FEET
EL OR ELEV	ELEVATION
GRD BRK	GRADE BREAK
CP	SURVEY CONTROL POINT
SW	SIDEWALK
CY	CUBIC YARDS

NO	BY	DATE	REVISIONS	DATE	APP.

Professional Engineer — CERTIFICATE NO. 49106 — KRISHAN GEVINDA GINIGE — 10/31/25 — REGISTERED — ARIZONA, U.S.A.

PREPARED BY:
DESIGNED BY:
DRAWN BY: MMW
CHECKED BY: KG
SCALE: AS SHOWN
DATE 10/31/25
JOB NO. 19-1101CE

TITLE: NOTES 2, LEGENDS, ABBREVIATIONS

JOB: JEROME WWTP — GRADING & UTILITIES PLANS — YAVAPAI COUNTY AZ

PREPARED BY:
SOUTHWESTERN ENVIRONMENTAL CONSULTANTS, INC
825 COVE PARKWAY
COTTONWOOD, AZ 86326
928-282-7787

SHEET
C1.1
8 OF 99 SHEETS

JOB NO. 19-1101CE

© 2025, SEC, Inc., All Rights Reserved. This document is protected under the United States Copyright Act. No part may be reproduced in any form or by any means or stored in a database or retrieval system, without the prior written permission of SEC, Inc. These plans/documents have been prepared using technical knowledge that would be applied by other qualified consultants who practice this same profession in the same area and at the same time. Efforts have been made to be as accurate as possible. However, plans/documents could contain unintentional technical inaccuracies, typographical errors or omissions. Users of these plans/documents should understand that it is highly probable that errors and omissions will occur in any plan/document preparation process.

S:\LAND PROJECTS 2004 ENGINEERING\19-1101CE JEROME WWTP\DWG\C3D\PLANS\NOTES_LEGENDS_DETAILS.DWG

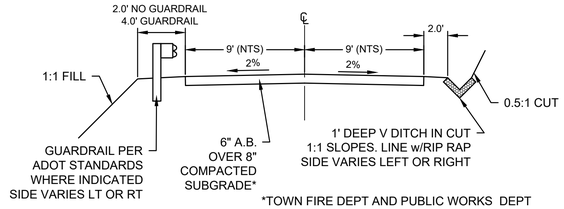

*TOWN FIRE DEPT AND PUBLIC WORKS DEPT
HAVE APPROVED USING AB ROAD SURFACE

1 TYPICAL WWTP ACCESS ROAD
1"=6'

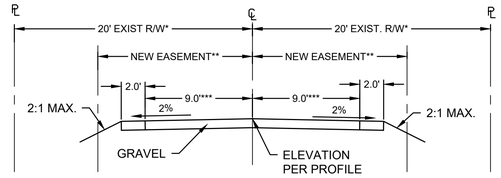

*NORTH DRIVE HAS 40' EXISTING RIGHT OF WAY
**NEW EASEMENT REQ'D. AT PRIVATE PROPERTY. WIDTH VARIES PER PLAN
***LANE WIDTH VARIES PER PLAN

2 TYPICAL NORTH DRIVE AND CEMETERY ACCESS RD
1"=6'

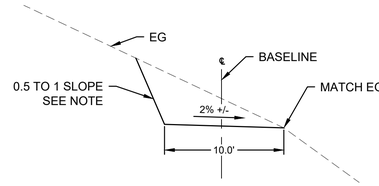

NOTE: 0.5 TO 1 SLOPE UPON APPROVAL BY
GEOTECHNICAL ENGINEER

3 TYPICAL SEWER ACCESS ROAD SECTION
1"=6'

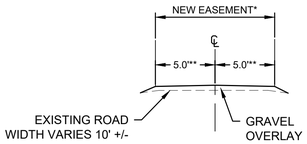

*NEW EASEMENT REQ'D. AT PRIVATE PROPERTY.
**PROVIDE MIN. 10' WIDE GRAVEL OVERLAY

4 TYPICAL CEMETERY RD THROUGH HISTORIC SITE
1"=6'

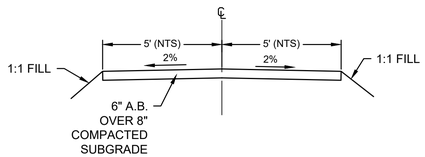

5 TYPICAL LOWER SITE ACCESS ROAD
1"=6'

NO	BY	DATE	REVISIONS	DATE	APP.

PREPARED BY:
DESIGNED BY:
DRAWN BY: NMW
CHECKED BY: KG
DATE 10/31/25
SCALE AS SHOWN
JOB NO. 19-1101CE

TITLE
TYPICAL SECTIONS

JOB
JEROME WWTP
GRADING & UTILITIES PLANS
YAVAPAI COUNTY AZ

PREPARED BY:
SEC Inc.
SOUTHWESTERN ENVIRONMENTAL CONSULTANTS, INC
825 COVE PARKWAY
COTTONWOOD, AZ 86326
928-282-7787

SHEET
C1.2
9 OF 99 SHEETS

JOB NO. 19-1101CE

© 2025, SEC, Inc., All Rights Reserved. This document is protected under the United States Copyright Act. No part may be reproduced in any form or by any means or stored in a database or retrieval system, without the prior written permission of SEC, Inc. possible. However, plans/documents could contain unintentional technical inaccuracies, typographical errors or omissions. Users of these plans/documents should understand that it is highly probable that errors and omissions will occur in any plan/document preparation process.

S:\land projects 2004 Engineering\19-1101CE Jerome WWTP\DWG\C3D\Plans\XBGRAD-19-1101CE.dwgS:\LAND PROJECTS 2004 ENGINEERING\19-1101CE JEROME WWTP\DWG\C3D\PLANS\XBGRAD-19-1101CE.DWG

100 YR FLOODWAY

500 YR FLOOD PLAIN

EXIST. PONDS

SHEET C2.1

NEW SEWER SEE SHEET C3.0

EXISTING BAR SCREEN

EXISTING TANKS

NEW WTTP

SHEET C2.6

EXISTING 12" SEWER FROM TOWN. SEE SHEET C3.0

MH-1

MH 2

12"SA

SA

P/L

X

BID ALTERNATE SEWER SEE SHEET C4.0

NEW SEWER CONSTRUCTION AND MAINTENANCE RD SEE SHEET C2.7

ROCK FALL PROTECTION BARRIER SEE SHEET C2.7

SHEET C2.5

SHEET C2.3

OPTIONAL WASTE EXCAVATION SITE 58,100 SF +/-

OPTIONAL TEMP. DUMP ROAD

EXISTING FENCE=END OF HISTORIC SITE

INSTALL NEW GATE AT EXISTING FENCE BEGIN IMPROVED ACCESS ROAD

APN 401-03-001L TOWN OF JEROME

CEMETARY

APN 401-03-043C JEROME VERDE DEVELOPMENT CO.

EXISTING ACCESS RD

½" REBAR LOT PIN MARKED RLS 26925
N: 1365826.06, E: 643587.50
ELEV=4801.17

4 C1.2

1 C1.2

IMPROVED ACCESS RD FOLLOWS EXISTING ROAD

PROPERTY BOUNDARY

NEW ACCESS EASEMENT REQ'D APN 401-03-043C

APPROX. CITY BOUNDARY

SHEET C2.4

PROJECT BENCH MARK
SET ½" REBAR
N: 1365466.36, E: 643466.42
ELEV 4827.11

RESTORE EXISTING CEMETERY ROAD TO MIN. 10' WIDE THROUGH HISTORIC SITE. SEE DETAIL 4, SHEET C1.2. SEE NOTE 3 THIS SHEET.

END NORTH DRIVE IMPROVEMENTS

APN 401-03-001C STUART

APN 401-11-001B DOSS

APN 401-11-001GU PATHWAY REAL ESTATE

APN 401-03-001N TOWN OF JEROME

EXISTING GRAVEL PARKING AREA

½" REBAR LOT PIN MARKED RLS 26925
N: 1365527.64, E: 643545.12
ELEV 4815.50

EXISTING CEMETARY GATE=BEGINNING OF HISTORIC SITE. SEE NOTE 3 THIS SHEET.

IMPROVED NORTH DRIVE. SEE DETAIL 2 SHEET C1.2

NEW ACCESS EASEMENT REQ'D 401-03-001P

NEW ACCESS EASEMENT REQ'D 401-11-007C

NEW ACCESS EASEMENT REQ'D 401-11-031A

EXISTING OVERHEAD POWER LINE AND 8' EASEMENT

JEROME APN 401-03-001P JEROME VERDE DEVELOPMENT CO.

APN 401-11-005A PATHWAY REALTY

APN 401-11-005B CANTO

APN 401-11-006 PETERSON

APN 401-11-007C LEACHMAN

HAMPSHIRE AVENUE / 89A

NORTH DRIVE

2 C1.2

APN 401-11-008 McWHIRTER & HUERTA

APN 401-11-031A CROSBY

SHEET C2.2

IMPROVE NORTH DRIVE INTERSECTION AT HWY 89A

EXISTING BLDG HAS BEEN REMOVED A NEW BLDG IS PENDING

NOTES

1. ACCESS ROAD IS DESIGNED TO ACCOMODATE AN AASHTO SU-30 TRUCK (APPROXIMATELY 30' LONG SINGLE UNIT TRUCK)
2. 2' CONTOURS SHOWN
3. THE CEMETARY IS A HISTORIC SITE. ANY WORK OR IMPROVEMENTS WITHIN THE HISTORIC SITE SHALL COMPLY WITH THE GOVERNING RESTRICTIONS. THE CONTRACTOR SHALL CONSULT WITH THE TOWN TO DETERMINE THE RESTRICTIONS.
4. NEW ACCESS EASEMENTS ARE NEEDED FOR ACCESS TO THE TREATMENT PLANT THROUGH THE PRIVATE PROPERTIES SHOWN. EASEMENTS ARE SHOWN FOR REFERENCE ONLY. FINAL DETAILS TO BE COORDINATED BY THE TOWN.

EARTHWORK ESTIMATE (CUBIC YARDS)*			
AREA	CUT	FILL	NET
NORTH DRIVE IMPROVEMENTS	101	94	7 CUT
WWTP ACCESS ROAD	4746	984	3762 CUT
WWTP PAD	993	897	96 CUT
LOWER WWTP SITE ACCESS RD	0	299	299 FILL
SEWER ACCESS RD	527	29	498 CUT
BROW DITCH	141	0	141 CUT
		TOTAL	4,266 CUT
*NO SHRINKAGE OR EXPANSION FACTORS APPLIED. EARTHWORK IS TO FINISHED GRADE. DEPTH TO SUBGRADE NOT ACCOUNTED FOR			

NORTH

0 20' 40' 80'

SCALE: 1"=40' @ 24"x36"

NO	BY	DATE	REVISIONS	DATE	APP.

Professional Engineer
CERTIFICATE NO.
49100
KRISHAN GEVINDA GINIGE
10/31/25
DATE SIGNED
ARIZONA, U.S.A.

PREPARED BY:
DESIGNED BY:
DRAWN BY: NMW
CHECKED BY: KG
SCALE: AS SHOWN
DATE: 10/31/25
JOB NO. 19-1101CE

TITLE
GRADING SITE MAP, SURVEY CONTROL

JOB
JEROME WWTP
GRADING & UTILITIES PLANS
YAVAPAI COUNTY AZ

PREPARED BY:
SEC Inc.
SOUTHWESTERN ENVIRONMENTAL CONSULTANTS, INC
825 COVE PARKWAY
COTTONWOOD, AZ 86326
928-282-7787

SHEET
C2.0
10 OF 99 SHEETS

JOB NO. 19-1101CE

© 2025, SEC, Inc., All Rights Reserved. This document is protected under the United States Copyright Act. No part may be reproduced in any form or by any means or stored in a database or retrieval system, without the prior written permission of SEC, Inc. These plans/documents have been prepared using technical knowledge that would be applied by other qualified registrants who practice the same profession in the same area and at the same time. Efforts have been made to be as accurate as possible. However, plans/documents could contain unintentional technical inaccuracies, typographical errors or omissions. Users of these plans/documents should understand that it is highly probable that errors and omissions will occur in any plan/document preparation process.

S:\land projects 2004 Engineering\19-1101CE Jerome WWTP\DWG\C3D\Plans\XBGRAD-19-1101CE.dwgS:\LAND PROJECTS 2004 ENGINEERING\19-1101CE JEROME WWTP\DWG\C3D\PLANS\XBGRAD-19-1101CE.DWG

CALLOUTS-WWTP	
1	NEW WASTEWATER TREATMENT PLANT
2	BLOWER / OPERATOR BLDG PER WWTP PLANS
3	CONCRETE DUMPSTER PAD & RAMP FOR DEWATERING PER STRUCTURAL PLANS.
4	CHLORINE CONTACT PER WWTP PLANS
5	EMERGENCY BACKUP GENERATOR PER WWTP PLANS
6	CATCH BASIN & DRAIN PIPE. SEE SHEET C2.6
7	PROVIDE STAIRS & HANDRAILS TO DUMPSTER PAD PER WWTP PLANS
8	TREATEMENT PLANT PAD. 6" AB OVER 8" COMPACTED SUBGRADE.
9	NOT USED.
10	BID ALTERNATE SEWER. SEE SHEET C4.0
11	PIPING PER WWTP PLANS
12	EXISTING 12" SEWER FROM TOWN. SEE SHEET C3.0
13	NEW 12" SEWER FROM TOWN. SEE SHEET C3.0
14	PROVIDE 5' WIDE PATH FOR SCREENINGS REMOVAL HAND CART
15	PLANT SCREENINGS REMOVAL PER WWTP PLANS
16	RETAINING WALL. FG ELEVATIONS PER PLAN. DETAILS PER STRUCTURAL PLANS. PROVIDE SAFETY RAILS FOR PEDESTRIAN FALL PROTECTION. SEE NOTE 4.
17	GRADE DEWATERING PAD TO DRAIN TO WALL OPENING OR SCUPPER. DETAILS TO BE COORDINATED BY STRUCTURAL ENGINEER.
18	BID ALTERNATE: INSTALL BOULDER CATCH FENCE. SEE SHEET C2.7.
19	1.5' DEEP BROW DITCH
20	EXISTING PVC WATER LINE. TO BE REMOVED OR RELOCATED PER TREATMENT PLANT PLANS. SEE NOTE 3.

NOTES
1. RETAINING WALL FINISHED GRADE ELEVATIONS SHOWN. TOP OF WALL AND FOOTING ELEVATIONS PER STRUCTURAL DETAILS. BY OTHERS.
2. 2' CONTOURS SHOWN
3. REFER TO TREATMENT PLANT PLANS, NOTES AND SPECIFICATIONS FOR ADDITIONAL CONSTRUCTION REQUIREMENTS AND DETAILS. BY OTHERS.
4. ALL RETAINING WALLS SHALL HAVE SAFETY RAILS PER MSD 145 OR OTHER SIMILAR MEANS FOR PEDESTRIAN FALL PROTECTION. TO BE COORDINATED BY STRUCTURAL ENGINEER.
5. ALL DITCHES, PONDS, DRAINAGE FLOW PATHS SHALL BE LINED WITH RIP RAP TO A HEIGHT OF MIN DEPTH. RIP RAP NOT SHOWN FOR CLARITY.
6. ALL RIP RAP D50=6" x 12" DEEP w/GEOTEXTILE FABRIC UNDERLAY UNLESS OTHERWISE SPECIFIED.
7. ALL SLOPES STEEPER THAN 2:1 SHALL HAVE EROSION PROTECTION PER GEOTECHNICAL ENGINEER RECOMMENDATIONS.

ESTIMATE OF EARTHWORK QTY'S SHOWN ON SEE SHEET C2.0

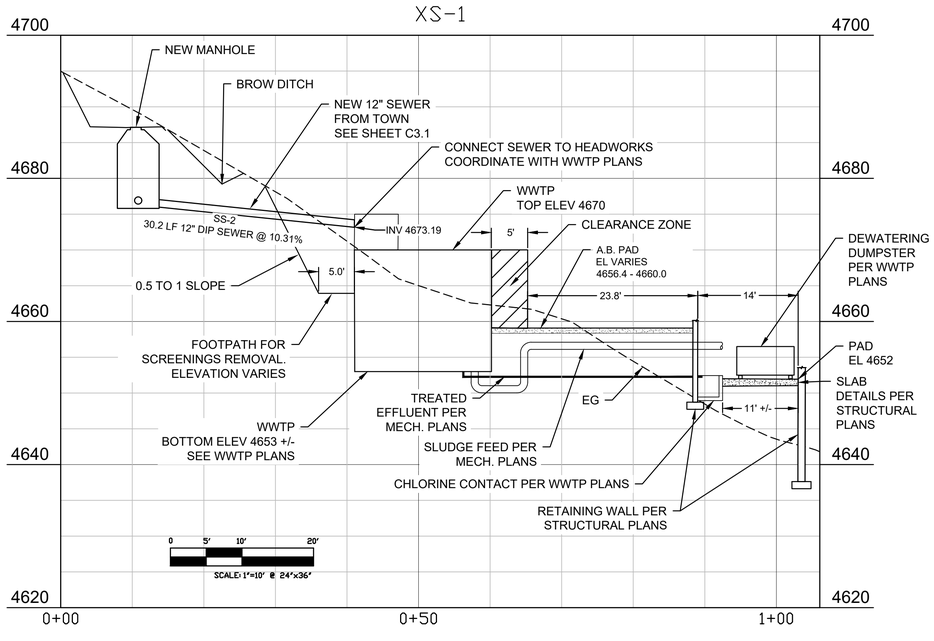

NO	BY	DATE	REVISIONS	DATE	APP.

Professional Engineer
CERTIFICATE NO.
49106
KRISHAN GEVINDA GINIGE
10/31/25
DATE SIGNED
ARIZONA, U.S.A.

PREPARED BY:
DESIGNED BY:
DRAWN BY: NMW
CHECKED BY: KG
SCALE: AS SHOWN
DATE 10/31/25
JOB NO. 19-1101CE

TITLE
WWTP SITE GRADING-10SC

JOB
JEROME WWTP
GRADING & UTILITIES PLANS
YAVAPAI COUNTY AZ

PREPARED BY:
SEC Inc.
SOUTHWESTERN ENVIRONMENTAL CONSULTANTS, INC
825 COVE PARKWAY
COTTONWOOD, AZ 86326
928-282-7787

SHEET
C2.1
11 OF 99 SHEETS

JOB NO. 19-1101CE

© 2025, SEC, Inc., All Rights Reserved. This document is protected under the United States Copyright Act. No part may be reproduced in any form or by any means or stored in a database or retrieval system, without the prior written permission of SEC, Inc. possible. However, plans/documents could contain unintentional technical inaccuracies, typographical errors or omissions. Users of these plans/documents should understand that it is highly probable that errors and omissions will occur in any plan/document preparation process.

S:\land projects 2004 Engineering\19-1101CE Jerome WWTP\DWG\C3D\Plans\XBGRAD-19-1101CE.dwgS:\LAND PROJECTS 2004 ENGINEERING\19-1101CE JEROME WWTP\DWG\C3D\PLANS\XBGRAD-19-1101CE.DWG

MATCH SHEET C2.0

CALLOUTS-NORTH DRIVE	
1	INSTALL NEW WIDENED ROAD PER DETAIL 2, SHEET C1.2
2	REMOVE EXISTING TREE AS NEEDED TO ACCOMODATE NEW RADIUS AT HWY 89A
3	SAWCUT & REMOVE 2' ASPHALT FOR NEW CONCRETE CONSTRUCTION. REPLACE PER ADOT SPECS.
4	PROVIDE CONCRETE APRON AT CONNECTION TO HWY 89A. 6" CONCRETE OVER 6" AB. PROVIDE SINGLE MAT #4 BARS AT 18" OC BW, CENTERED IN SLAB. PROVIDE EXPANSION & CONTRACTION JOINTS PER ADOT STD DWG C-05.20.
5	MATCH EXISTING DRIVEWAY OR SIDE ROAD

NOTES
1. 2' CONTOURS SHOWN
2. A PERMIT IS REQUIRED FOR ALL WORK WITHIN ADOT RIGHT OF WAY.
3. NEW ACCESS EASEMENTS ARE REQUIRED AT PRIVATE PROPERTIES AS SHOWN IN THESE PLANS. SHOWN FOR REFERENCE ONLY. FINAL DETAILS TO BE COORDINATED BY THE TOWN.

BASELINE EXISTING CEMETERY ROAD
SEE SHEET C2.0

END NORTH DRIVE @ 5+25
BEGIN CEMETERY ROAD @ 15+22.53

EXISTING CEMETERY GATE

END=5+25
PT=5+21.64
R30.00'
PRC=5+09.33
PC=4+94.75
R165.00'
PT=4+75.51
R30.00'
4+00
5+00
PRC=4+39.57

BEGIN EXISTING GRAVEL PARKING AREA,
3+87 +/-

PT=3+54.20
4+00
R70.69'

EXISTING 8' POWER LINE ESMT

NEW ACCESS ESMT REQ'D
APN 401-03-001P

BASELINE NORTH DRIVE

PC=3+30.83
10'
PT=3+02.37
3+00
R22.00'
PRC=2+76.13

TRANSITION LANE WIDTH FROM 9' TO 10'
STA 2+76.13 TO 3+02.37

USE 1:1 SLOPE AND/OR ADD WALL TO FIT NEW EASEMENT. PROVIDE SHOP DWG TO ENGINEER FOR APPROVAL PRIOR TO CONST.

NEW ACCESS EASEMENT REQ'D
APN 401-11-007C
185 SF +/-

NEW ACCESS EASEMENT REQ'D
APN 401-11-031A
25 SF +/-

TRANSITION LANE WIDTH FROM 18' TO 9'
STA 2+30 TO 2+50

APN 401-11-0019U
PATHWAY REAL ESTATE

APN 401-03-001N
TOWN OF JEROME

APN 401-11-005A
PATHWAY REALTY

APN 401-11-005B
CANTO

APN 401-11-006
PETERSON

APN 401-11-007C
LEACHMAN

APN 401-11-031A
CROSBY

APN 401-11-008
McWHIRTER & HUERTA

APN 401-03-001P
JEROME VERDE DEVELOPMENT CO.

0+60.84, 9.00' LT
FG=4868.29

0+25.64, 9.00' LT
FG=4874.10

PT=0+52.48
R30.00'
R20.00'
R35.00'

0+14.34, 23.50' LT
FG=4876.52

PC=0+14.97
R16.00'
BEGIN=0+00

0+12.09, 34.29' RT
FG=4873.67

0+60.84, 9.00' RT
FG=4868.29

1+00
2+00
16.0'
20' R/W
PC=1+68.21
R110.00'

NOTE: THERE IS AN EXISTING WATER UTILITY IN THIS AREA. LOCATION AND DEPTH TBD AT TIME OF CONSTRUCTION

EXISTING BLDG HAS BEEN REMOVED
A NEW BLDG IS PENDING

N O R T H

0 10' 20' 40'
SCALE: 1"=20' @ 24"x36"

Profile View of NORTH DRIVE

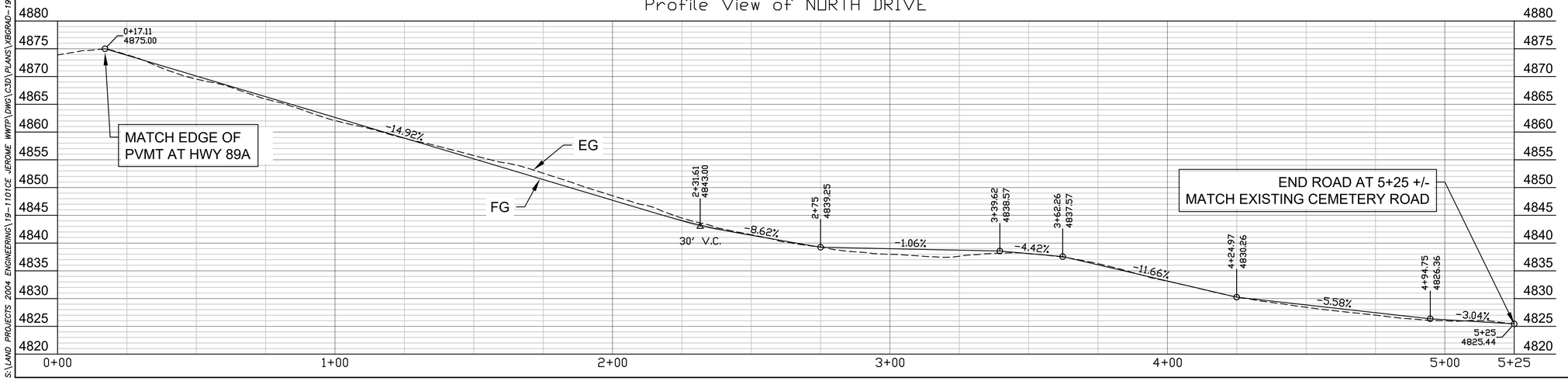

NO	BY	DATE	REVISIONS	DATE	APP.

49106
KRISHAN GEVINDA GINIGE
10/31/25
ARIZONA, U.S.A.

PREPARED BY:
DESIGNED BY:
DRAWN BY: NMW
CHECKED BY: KG
SCALE: AS SHOWN
DATE 10/31/25
JOB NO. 19-1101CE

TITLE
NORTH DR IMPROVEMENTS

JOB
JEROME WWTP
GRADING & UTILITIES PLANS
YAVAPAI COUNTY AZ

PREPARED BY:
SOUTHWESTERN ENVIRONMENTAL CONSULTANTS, INC
825 COVE PARKWAY
COTTONWOOD, AZ 86326
928-282-7787

SHEET
C2.2
12 OF 99 SHEETS

JOB NO. 19-1101CE

© 2025, SEC, Inc., All Rights Reserved. This document is protected under the United States Copyright Act. No part may be reproduced in any form or by any means or stored in a database or retrieval system, without the prior written permission of SEC, Inc. These plans/documents have been prepared using technical knowledge that would be applied by other qualified registrants who practice the same profession in the same area and at the same time. Efforts have been made to be as accurate as possible. However, plans/documents could contain unintentional technical inaccuracies, typographical errors or omissions. Users of these plans/documents should understand that it is highly probable that errors and omissions will occur in any plan/document preparation process.

S:\LAND PROJECTS 2004 ENGINEERING\19-1101CE JEROME WWTP\DWG\C3D\PLANS\XBGRAD-19-1101CE.DWG

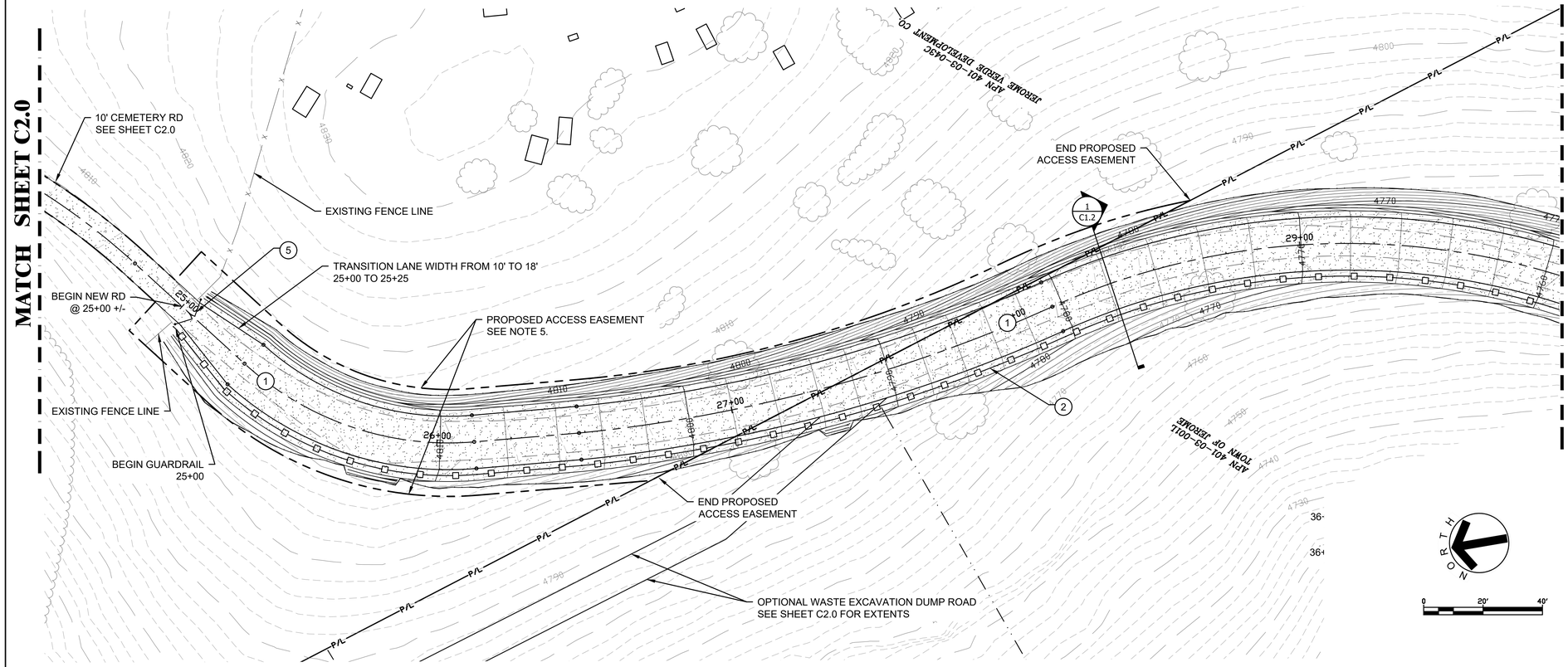

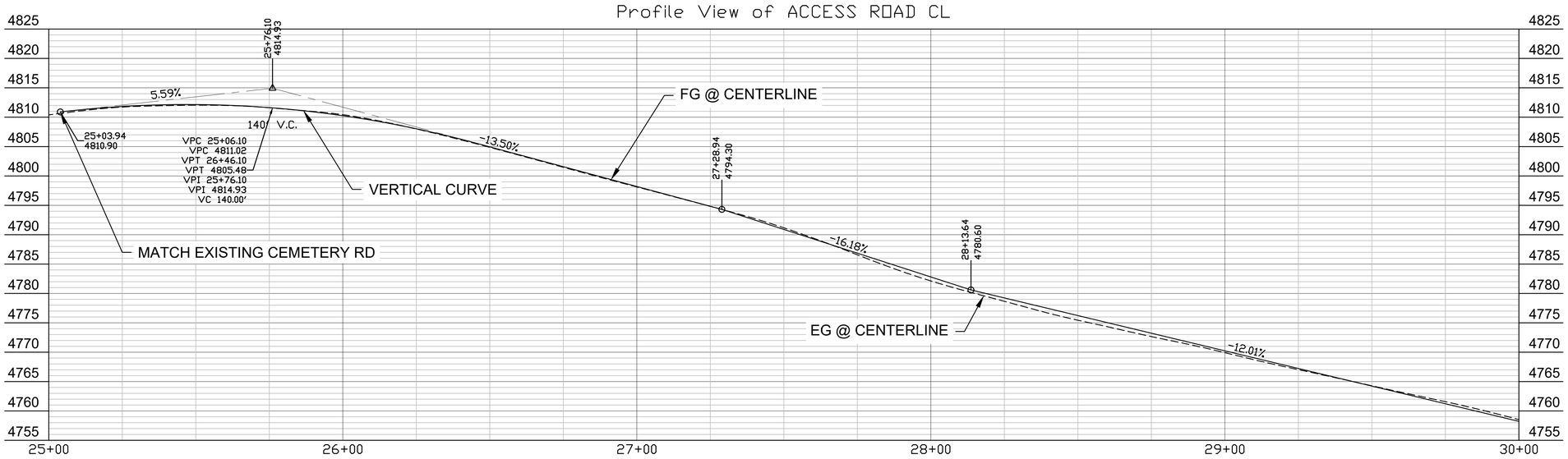

CALLOUTS-WWTP ACCESS RD	
1	INSTALL ACCESS ROAD PER DETAIL 1, SHEET C1.2
2	INSTALL GUARD RAIL PER ADOT STDS OR EQUAL
3	CATCH BASIN PER MSD 537, DOUBLE GRATE & 18" CMP. SEE PROFILE ON THIS SHEET
4	INSTALL 4' WIDE RIP RAP AT DRAIN PIPE OUTLET. SEE NOTE 2.
5	INSTALL 12' WIDE CHAIN LINK SWING GATE AT EXISTING FENCE LINE PER MSD 160 OR AS DIRECTED BY THE TOWN.

NOTES

1. THE CEMETARY IS A HISTORICAL SITE. ANY IMPROVEMENTS SHALL COMPLY WITH THE RESTRICTIONS FOR THE SITE. CONTRACTOR SHALL CONSULT WITH THE TOWN FOR DETAILS.
2. ALL RIP RAP SHALL BE D50=6" x 12" DEEP w/GEOTEXTILE FABRIC UNDERLAY UNLESS OTHERWISE INDICATED.
3. ALL SLOPES STEEPER THAN 2:1 SHALL HAVE EROSION PROTECTION PER GEOTECHNICAL ENGINEER RECOMMENDATIONS.
4. LINE ALL PONDS, DITCHES, DRAINAGE FLOW PATHS WITH RIP RAP TO HEIGHT=MIN. DEPTH. RIP RAP NOT SHOWN FOR CLARITY.
5. PROPOSED ACCESS EASEMENTS ARE REQUIRED THROUGH THE PRIVATE PROPERTIES SHOWN IN THESE PLANS. SHOWN FOR REFERENCE ONLY. FINAL DETAILS TO BE COORDINATED BY THE TOWN.

NO	BY	DATE	REVISIONS	DATE	APP.

Professional Engineer
49109
KRISHAN GEVINDA GINIGE
10/31/25
DATE SIGNED
ARIZONA, U.S.A.

PREPARED BY:
DESIGNED BY:
DRAWN BY: NMW
CHECKED BY: KG
SCALE: AS SHOWN
DATE 10/31/25
JOB NO. 19-1101CE

TITLE
WWTP ACCESS RD P&P 25+00+TO 30+00

JOB
JEROME WWTP
GRADING & UTILITIES PLANS
YAVAPAI COUNTY AZ

PREPARED BY:
SEC Inc.
SOUTHWESTERN ENVIRONMENTAL CONSULTANTS, INC
825 COVE PARKWAY
COTTONWOOD, AZ 86326
928-282-7787

SHEET
C2.3
13 OF 99 SHEETS

JOB NO. 19-1101CE

© 2025, SEC, Inc., All Rights Reserved. This document is protected under the United States Copyright Act. No part may be reproduced in any form or by any means or stored in a database or retrieval system, without the prior written permission of SEC, Inc. These plans/documents have been prepared using technical knowledge that would be applied by other qualified registrants who practice the same profession in the same area and at the same time. Efforts have been made to be as accurate as possible. However, plans/documents could contain unintentional technical inaccuracies, typographical errors or omissions. Users of these plans/documents should understand that it is highly probable that errors and omissions will occur in any plan/document preparation process.

S:\LAND PROJECTS 2004 ENGINEERING\19-1101CE JEROME WWTP\DWG\C3D\PLANS\XBGRAD-19-1101CE.DWG

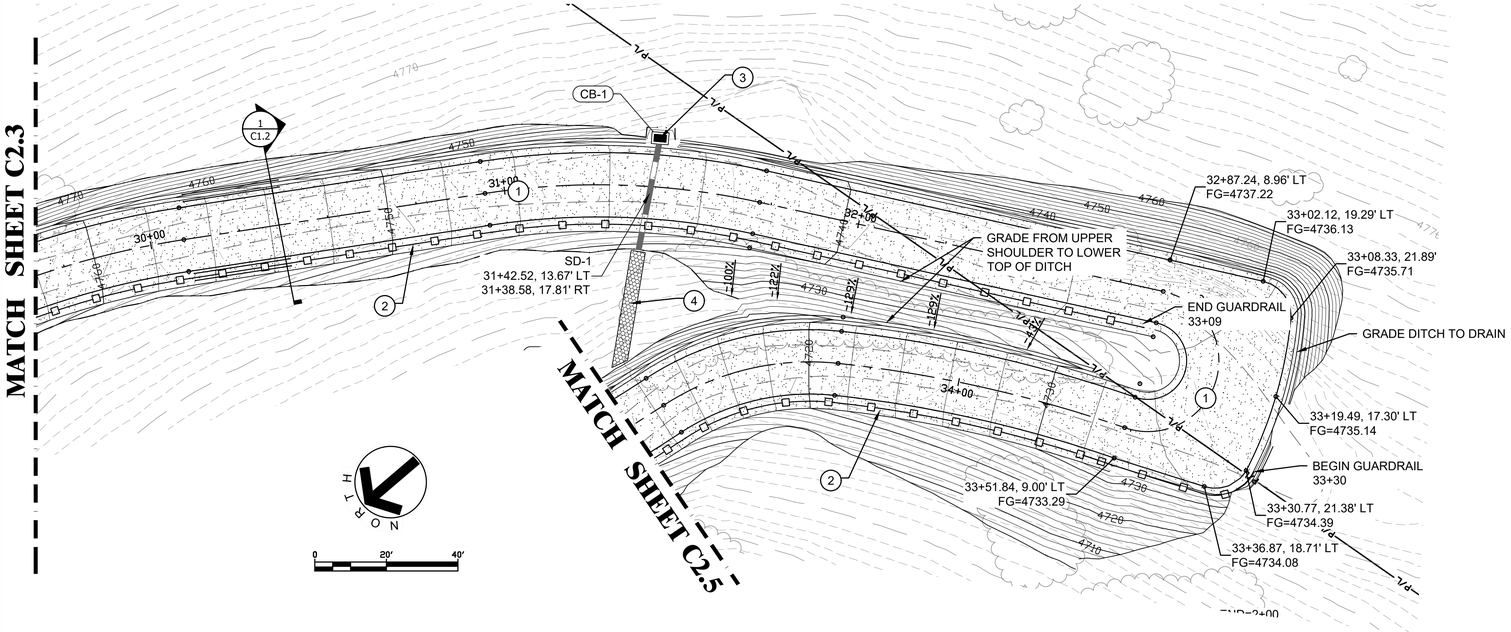

CALLOUTS-WWTP ACCESS RD	
1	INSTALL ACCESS ROAD PER DETAIL 1, SHEET C1.2
2	INSTALL GUARD RAIL PER ADOT STDS OR EQUAL
3	CATCH BASIN PER MSD 537, DOUBLE GRATE & 18" CMP. SEE PROFILE ON THIS SHEET
4	INSTALL 4' WIDE RIP RAP AT DRAIN PIPE OUTLET. SEE NOTE 2.
5	INSTALL 12' WIDE CHAIN LINK SWING GATE AT EXISTING FENCE LINE PER MSD 160 OR AS DIRECTED BY THE TOWN.

NOTES
1. THE CEMETARY IS A HISTORICAL SITE. ANY IMPROVEMENTS SHALL COMPLY WITH THE RESTRICTIONS FOR THE SITE. CONTRACTOR SHALL CONSULT WITH THE TOWN FOR DETAILS.
2. ALL RIP RAP SHALL BE D50=6" x 12" DEEP w/GEOTEXTILE FABRIC UNDERLAY UNLESS OTHERWISE INDICATED.
3. ALL SLOPES STEEPER THAN 2:1 SHALL HAVE EROSION PROTECTION PER GEOTECHNICAL ENGINEER RECOMMENDATIONS.
4. LINE ALL PONDS, DITCHES, DRAINAGE FLOW PATHS WITH RIP RAP TO HEIGHT=MIN. DEPTH. RIP RAP NOT SHOWN FOR CLARITY.
5. PROPOSED ACCESS EASEMENTS ARE REQUIRED THROUGH THE PRIVATE PROPERTIES SHOWN IN THESE PLANS. SHOWN FOR REFERENCE ONLY. FINAL DETAILS TO BE COORDINATED BY THE TOWN.

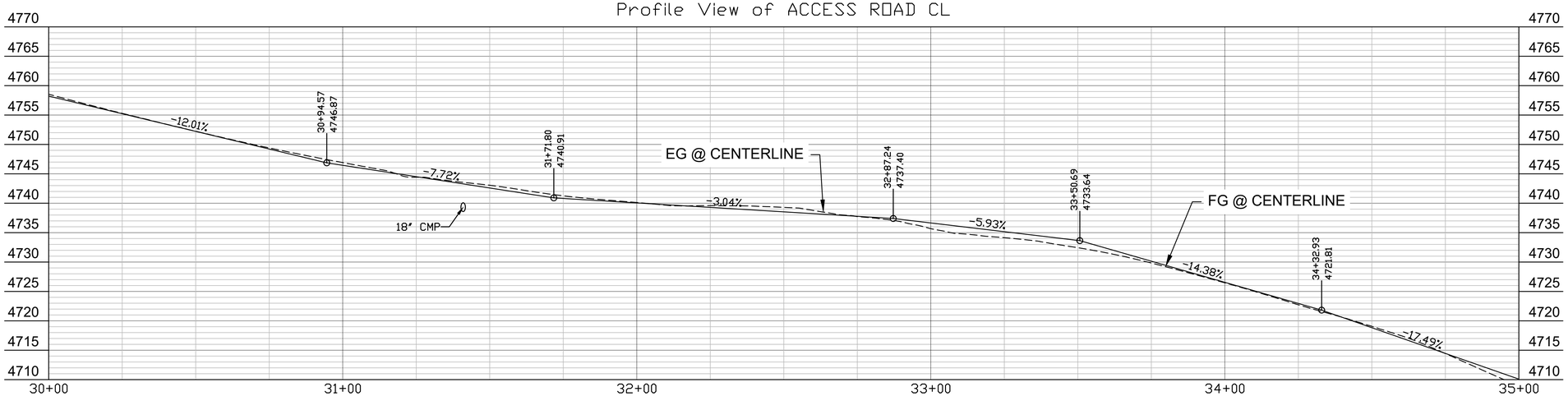

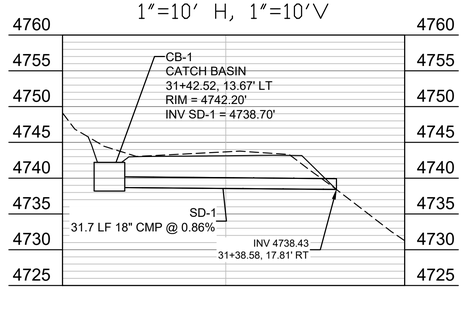

NO	BY	DATE	REVISIONS	DATE	APP.

49106
KRISHAN GEVINDA GINIGE
10/31/25
REGISTERED PROFESSIONAL ENGINEER
ARIZONA, U.S.A.

PREPARED BY:
DESIGNED BY:
DRAWN BY: NMW
CHECKED BY: KG
SCALE: AS SHOWN
DATE 10/31/25
JOB NO. 19-1101CE

TITLE
WWTP ACCESS RD P&P 30+00 TO 35+00

JOB
JEROME WWTP
GRADING & UTILITIES PLANS
YAVAPAI COUNTY AZ

PREPARED BY:
SOUTHWESTERN ENVIRONMENTAL CONSULTANTS, INC
825 COVE PARKWAY
COTTONWOOD, AZ 86326
928-282-7787

SHEET
C2.4
14 OF 99 SHEETS

JOB NO. 19-1101CE

© 2025, SEC, Inc., All Rights Reserved. This document is protected under the United States Copyright Act. No part may be reproduced in any form or by any means or stored in a database or retrieval system, without the prior written permission of SEC, Inc. These plans/documents have been prepared using technical knowledge that would be applied by other qualified registrants who practice the same profession in the same area and at the same time. Efforts have been made to be as accurate as possible. However, plans/documents could contain unintentional technical inaccuracies, typographical errors or omissions. Users of these plans/documents should understand that it is highly probable that errors and omissions will occur in any plan/document preparation process.

S:\LAND PROJECTS 2004 ENGINEERING\19-1101CE JEROME WWTP\DWG\C3D\PLANS\XBGRAD-19-1101CE.DWG

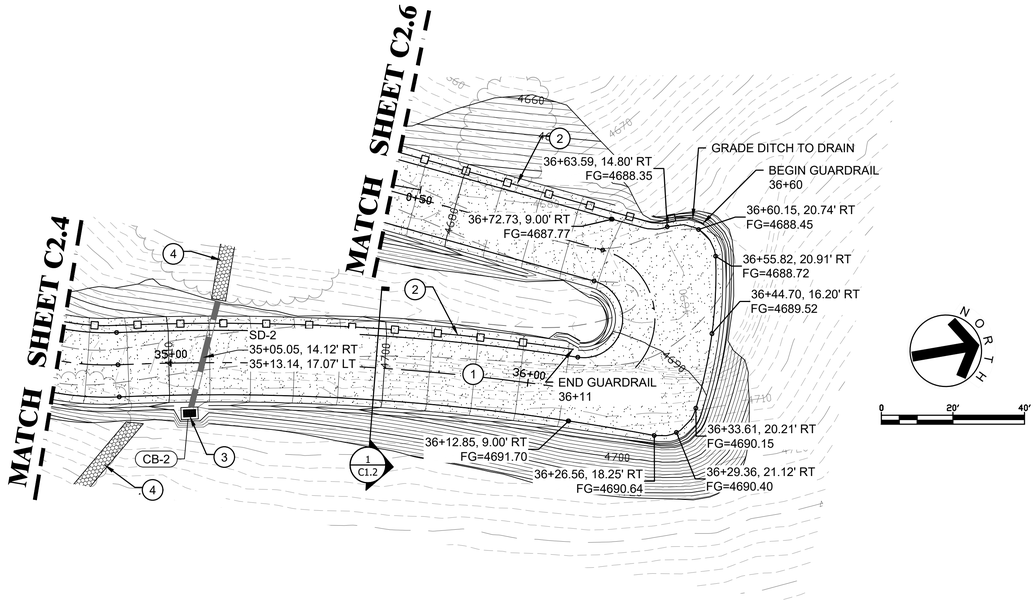

CALLOUTS-WWTP ACCESS RD	
1	INSTALL ACCESS ROAD PER DETAIL 1, SHEET C1.2
2	INSTALL GUARD RAIL PER ADOT STDS OR EQUAL
3	CATCH BASIN PER MSD 537, DOUBLE GRATE & 18" CMP. SEE PROFILE ON THIS SHEET
4	INSTALL 4' WIDE RIP RAP AT DRAIN PIPE OUTLET. SEE NOTE 2.
5	INSTALL 12' WIDE CHAIN LINK SWING GATE AT EXISTING FENCE LINE PER MSD 160 OR AS DIRECTED BY THE TOWN.

NOTES
1. THE CEMETARY IS A HISTORICAL SITE. ANY IMPROVEMENTS SHALL COMPLY WITH THE RESTRICTIONS FOR THE SITE. CONTRACTOR SHALL CONSULT WITH THE TOWN FOR DETAILS.
2. ALL RIP RAP SHALL BE D50=6" x 12" DEEP w/GEOTEXTILE FABRIC UNDERLAY UNLESS OTHERWISE INDICATED.
3. ALL SLOPES STEEPER THAN 2:1 SHALL HAVE EROSION PROTECTION PER GEOTECHNICAL ENGINEER RECOMMENDATIONS.
4. LINE ALL PONDS, DITCHES, DRAINAGE FLOW PATHS WITH RIP RAP TO HEIGHT=MIN. DEPTH. RIP RAP NOT SHOWN FOR CLARITY.
5. PROPOSED ACCESS EASEMENTS ARE REQUIRED THROUGH THE PRIVATE PROPERTIES SHOWN IN THESE PLANS. SHOWN FOR REFERENCE ONLY. FINAL DETAILS TO BE COORDINATED BY THE TOWN.

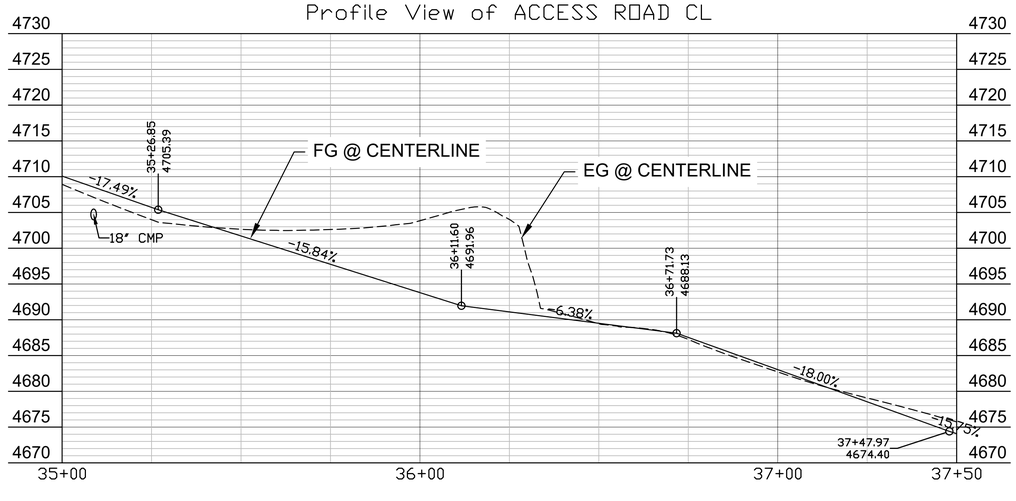

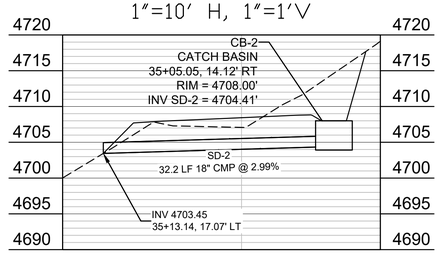

NO	BY	DATE	REVISIONS	DATE	APP.

Professional Engineer
49108
KRISHAN GEVINDA GINIGE
CERTIFICATE NO.
DATE SIGNED 10/31/25
ARIZONA, U.S.A.

PREPARED BY:
DESIGNED BY:
DRAWN BY: NMW
CHECKED BY: KG
SCALE: AS SHOWN
DATE 10/31/25
JOB NO. 19-1101CE

TITLE
WWTP ACCESS RD P&P 35+00 TO 37+50

JOB
JEROME WWTP
GRADING & UTILITIES PLANS
YAVAPAI COUNTY AZ

PREPARED BY:
SOUTHWESTERN ENVIRONMENTAL CONSULTANTS, INC
825 COVE PARKWAY
COTTONWOOD, AZ 86326
928-282-7787

SHEET
C2.5
15 OF 99 SHEETS

JOB NO. 19-1101CE

© 2025, SEC, Inc., All Rights Reserved. This document is protected under the United States Copyright Act. No part may be reproduced in any form or by any means or stored in a database or retrieval system, without the prior written permission of SEC, Inc. These plans/documents have been prepared using technical knowledge that would be applied by other qualified registrants who practice the same profession in the same area and at the same time. Efforts have been made to be as accurate as possible. However, plans/documents could contain unintentional technical inaccuracies, typographical errors or omissions. Users of these plans/documents should understand that it is highly probable that errors and omissions will occur in any plan/document preparation process.

S:\LAND PROJECTS 2004 ENGINEERING\19-1101CE JEROME WWTP\DWG\C3D\PLANS\XBGRAD-19-1101CE.DWG

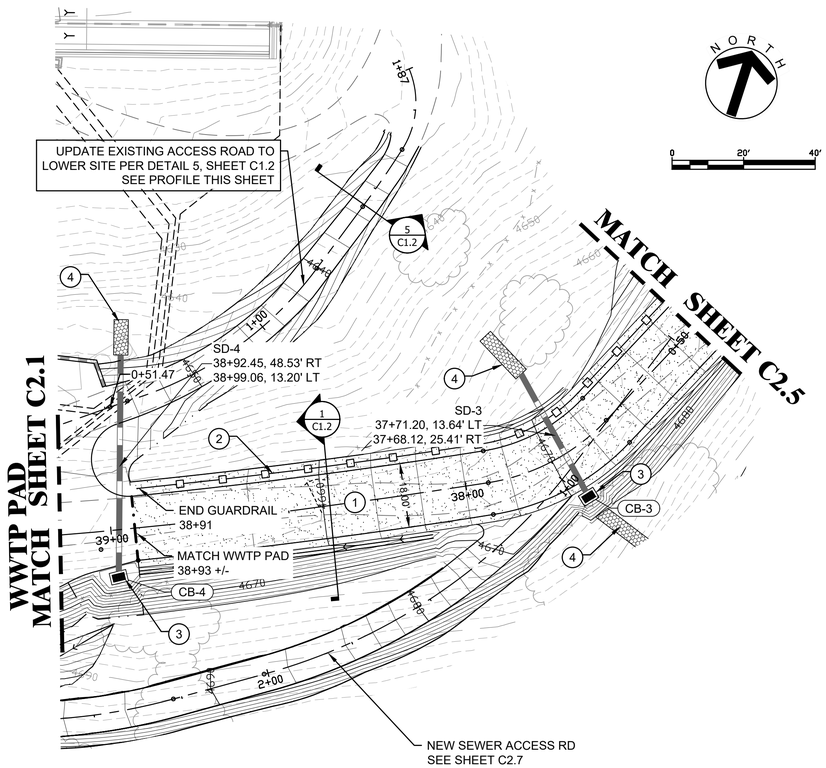

CALLOUTS-WWTP ACCESS RD	
1	INSTALL ACCESS ROAD PER DETAIL 1, SHEET C1.2
2	INSTALL GUARD RAIL PER ADOT STDS OR EQUAL
3	CATCH BASIN PER MSD 537, DOUBLE GRATE & 18" CMP. SEE PROFILE ON THIS SHEET
4	INSTALL 4' WIDE RIP RAP AT DRAIN PIPE OUTLET. SEE NOTE 2.
5	INSTALL 12' WIDE CHAIN LINK SWING GATE AT EXISTING FENCE LINE PER MSD 160 OR AS DIRECTED BY THE TOWN.

NOTES
1. THE CEMETARY IS A HISTORICAL SITE. ANY IMPROVEMENTS SHALL COMPLY WITH THE RESTRICTIONS FOR THE SITE. CONTRACTOR SHALL CONSULT WITH THE TOWN FOR DETAILS.
2. ALL RIP RAP SHALL BE D50=6" x 12" DEEP w/GEOTEXTILE FABRIC UNDERLAY UNLESS OTHERWISE INDICATED.
3. ALL SLOPES STEEPER THAN 2:1 SHALL HAVE EROSION PROTECTION PER GEOTECHNICAL ENGINEER RECOMMENDATIONS.
4. LINE ALL PONDS, DITCHES, DRAINAGE FLOW PATHS WITH RIP RAP TO HEIGHT=MIN. DEPTH. RIP RAP NOT SHOWN FOR CLARITY.
5. PROPOSED ACCESS EASEMENTS ARE REQUIRED THROUGH THE PRIVATE PROPERTIES SHOWN IN THESE PLANS. SHOWN FOR REFERENCE ONLY. FINAL DETAILS TO BE COORDINATED BY THE TOWN.

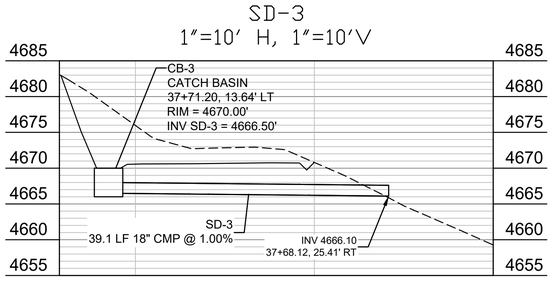

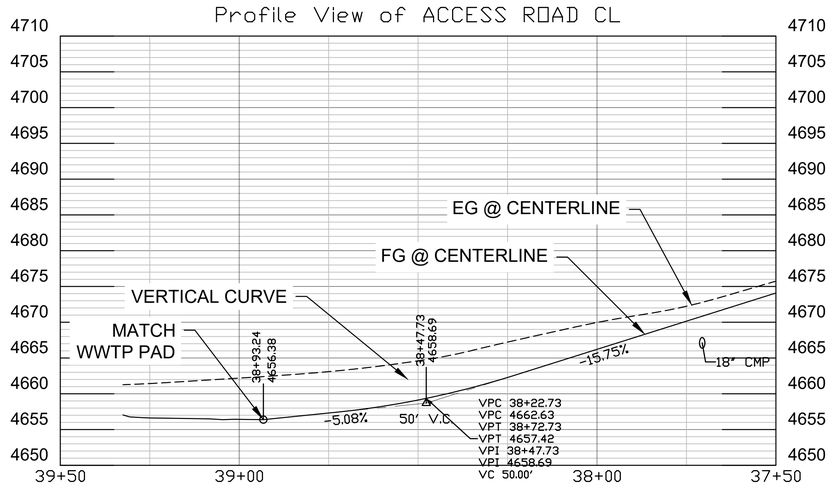

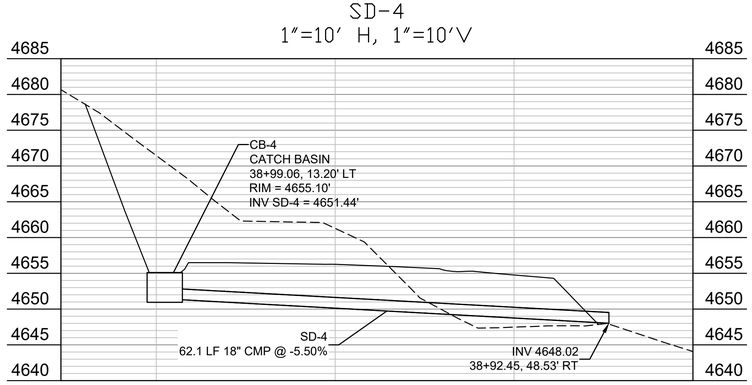

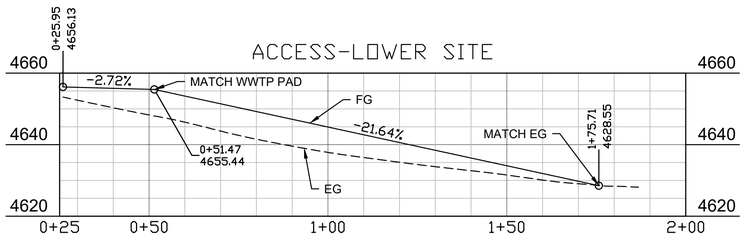

NO	BY	DATE	REVISIONS	DATE	APP.

PREPARED BY:
DESIGNED BY:
DRAWN BY: NMW
CHECKED BY: KG
SCALE: AS SHOWN
DATE 10/31/25
JOB NO. 19-1101CE

TITLE
WWTP ACCESS RD P&P 37+50 TO 39+75

JOB
JEROME WWTP
GRADING & UTILITIES PLANS
YAVAPAI COUNTY AZ

PREPARED BY:
SOUTHWESTERN ENVIRONMENTAL CONSULTANTS, INC
825 COVE PARKWAY
COTTONWOOD, AZ 86326
928-282-7787

SHEET
C2.6
16 OF 99 SHEETS

JOB NO. 19-1101CE

© 2025, SEC, Inc., All Rights Reserved. This document is protected under the United States Copyright Act. No part may be reproduced in any form or by any means or stored in a database or retrieval system, without the prior written permission of SEC, Inc. These plans/documents have been prepared using technical knowledge that would be applied by other qualified registrants who practice the same profession in the same area and at the same time. Efforts have been made to be as accurate as possible. However, plans/documents could contain unintentional technical inaccuracies, typographical errors or omissions. Users of these plans/documents should understand that it is highly probable that errors and omissions will occur in any plan/document preparation process.

S:\LAND PROJECTS 2004 ENGINEERING\19-1101CE JEROME WWTP\DWG\C3D\PLANS\XBGRAD-19-1101CE.DWG

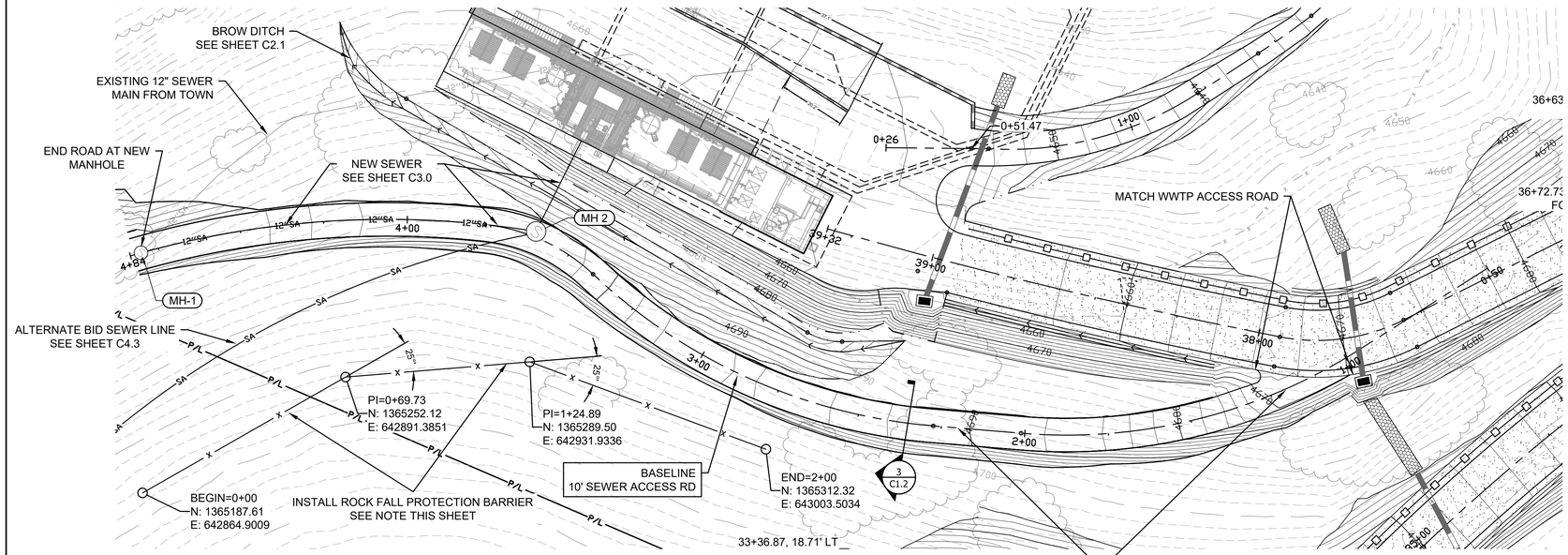

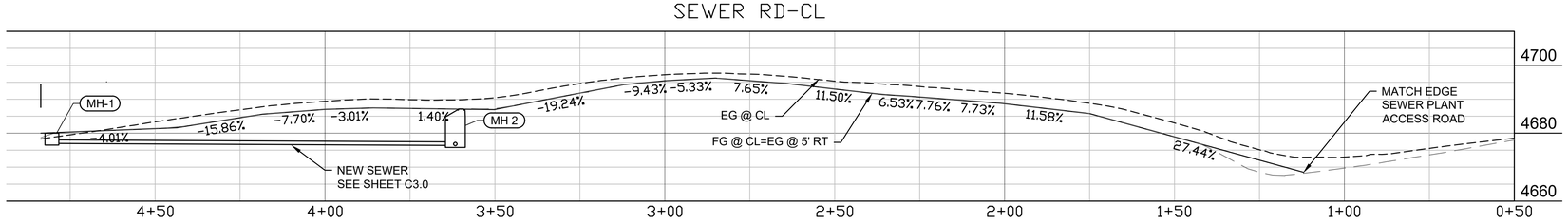

ROCK FALL PROTECTION BARRIER
PROVIDE ROCK FALL PROTECTION BARRIER. ALTERNATE BID ITEM. SEE PLAN SPECIFICATIONS FOR DETAILS.

NO	BY	DATE	REVISIONS	DATE	APP.

49106
KRISHAN
GEVINDA
GINIGE
10/31/25
ARIZONA, U.S.A.

PREPARED BY:
DESIGNED BY:
DRAWN BY: NMW
CHECKED BY: KG
SCALE: AS SHOWN
DATE 10/31/25
JOB NO. 19-1101CE

TITLE
NEW SEWER ACCESS ROAD

JOB
JEROME WWTP
GRADING & UTILITIES PLANS
YAVAPAI COUNTY AZ

PREPARED BY:
SOUTHWESTERN ENVIRONMENTAL CONSULTANTS, INC
825 COVE PARKWAY
COTTONWOOD, AZ 86326
928-282-7787

SHEET
C2.7
17 OF 99 SHEETS

JOB NO. 19-1101CE

© 2025, SEC, Inc. All Rights Reserved. This document is protected under the United States Copyright Act. No part may be reproduced in any form or by any means or stored in a database or retrieval system, without the prior written permission of SEC, Inc. These plans/documents have been prepared using technical knowledge that would be applied by other qualified registrants who practice the same profession in the same area and at the same time. Efforts have been made to be as accurate as possible. However, plans/documents could contain unintentional technical inaccuracies, typographical errors or omissions. Users of these plans/documents should understand that it is highly probable that errors and omissions will occur in any plan/document preparation process.

S:\LAND PROJECTS 2004 ENGINEERING\19-1101CE JEROME WWTP\DWG\C3D\PLANS\XBGRAD-19-1101CE.DWG

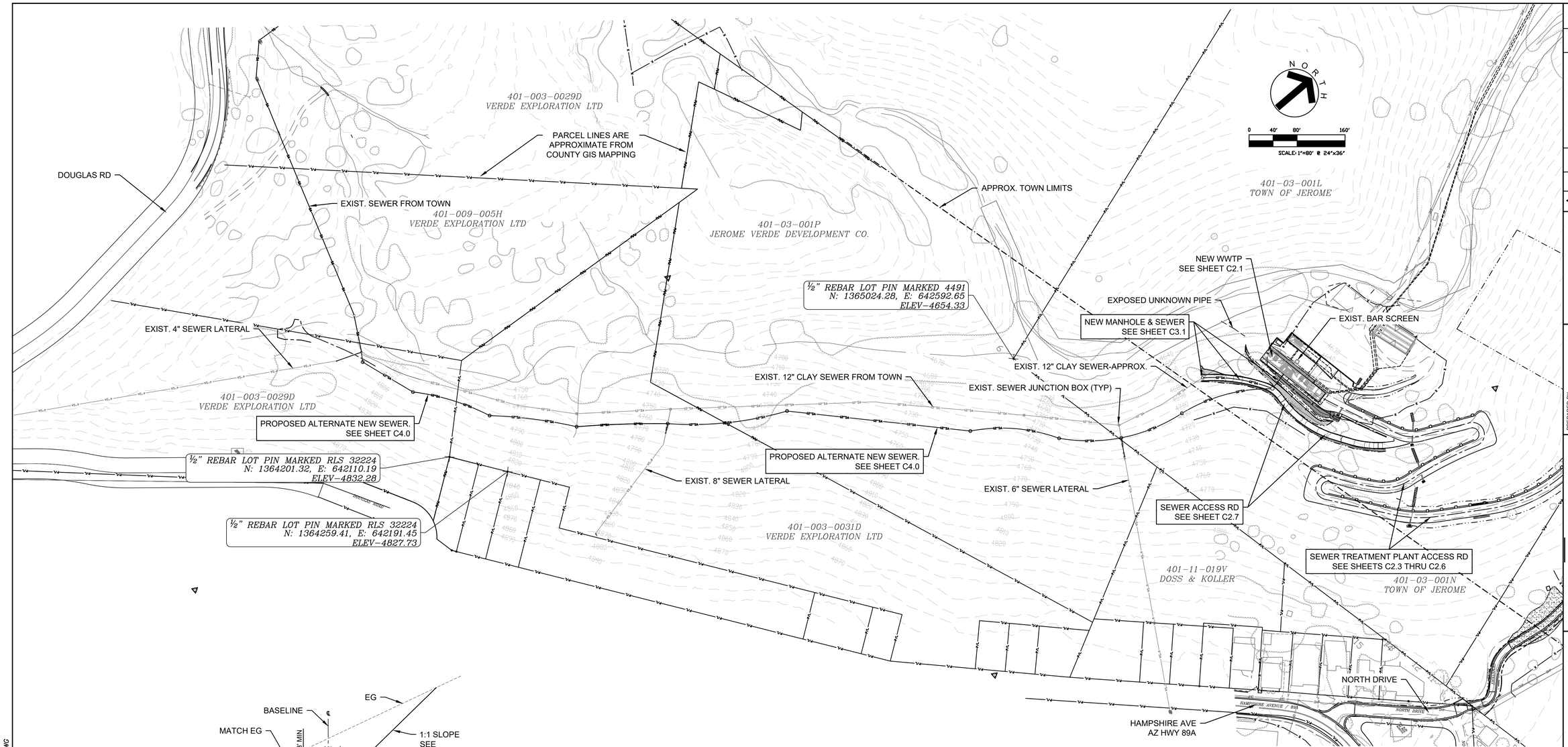

1 TYPICAL SEWER ROAD SECTION

1"=6'

CONSTRUCTION NOTES

1. THE EXISTING SEWER PIPES ARE VERY SHALLOW. EXTREME CAUTION IS REQUIRED TO ENSURE THE PIPES ARE PROTECTED DURING CONSTRUCTION. EXISTING SEWER TO REMAIN OPERATIONAL AT ALL TIMES UNTIL THE NEW SEWER IS ACTIVATED.
2. ALL TEMPORARY AND NEW SEWER PIPES AND STRUCTURES SHALL BE INSTALLED PER THE SPECIFICATIONS PROVIDED BY THE SEWER PLANT ENGINEER.

STRUCTURES					
STRUCTURE	DESC	RIM	INVERT	DEPTH (FT)	LOCATION
MH-1	MANHOLE-48"	4680.000'	OUT = 4677.00'	3.00	N: 1365243.77 E: 642820.46
MH 2	MANHOLE-60"	4687.137'	IN = 4676.40' OUT = 4676.30'	10.83	N: 1365321.33 E: 642909.50

PIPES			
PIPE	SIZE & TYPE	LENGTH	SLOPE
SS-1	12" FPVC	119.01'	0.50%
SS-2	12" DIP SEWER	30.20'	10.31%

ESTIMATE OF SEWER QTY'S		
ITEM	QTY	UNITS
12" PVC PIPE	100	LF
12" DIP	42	LF
48" MANHOLE	1	EA
60" DROP MANHOLE	1	EA

NO	BY	DATE	REVISIONS	DATE	APP.

Registered Professional Engineer (Civil)
CERTIFICATE NO.
49108
KRISHAN GEVINDA GINIGE
10/31/25
DATE SIGNED
ARIZONA, U.S.A.

PREPARED BY:
DESIGNED BY:
DRAWN BY: NMW
CHECKED BY: KG
SCALE: AS SHOWN
DATE: 10/31/25
JOB NO. 19-1101CE

TITLE: NEW SEWER SITE MAP, SURVEY CONTROL

JOB: JEROME WWTP
GRADING & UTILITIES PLANS
YAVAPAI COUNTY AZ

PREPARED BY:
SOUTHWESTERN ENVIRONMENTAL CONSULTANTS, INC
825 COVE PARKWAY
COTTONWOOD, AZ 86326
928-282-7787

SHEET
C3.0
18 OF 99 SHEETS

JOB NO. 19-1101CE

© 2025, SEC, Inc., All Rights Reserved. This document is protected under the United States Copyright Act. No part may be reproduced in any form or by any means or stored in a database or retrieval system, without the prior written permission of SEC, Inc. These plans/documents have been prepared using technical knowledge that would be applied by other qualified registrants who practice this same profession in the same area and at the same time. Efforts have been made to be as accurate as possible. However, plans/documents could contain unintentional technical inaccuracies, typographical errors or omissions. Users of these plans/documents should understand that it is highly probable that errors and omissions will occur in any plan/document preparation process.

S:\LAND PROJECTS 2004 ENGINEERING\19-1101CE JEROME WWTP\DWG\C3D\PLANS\XBSAN-19-1101CE.DWG

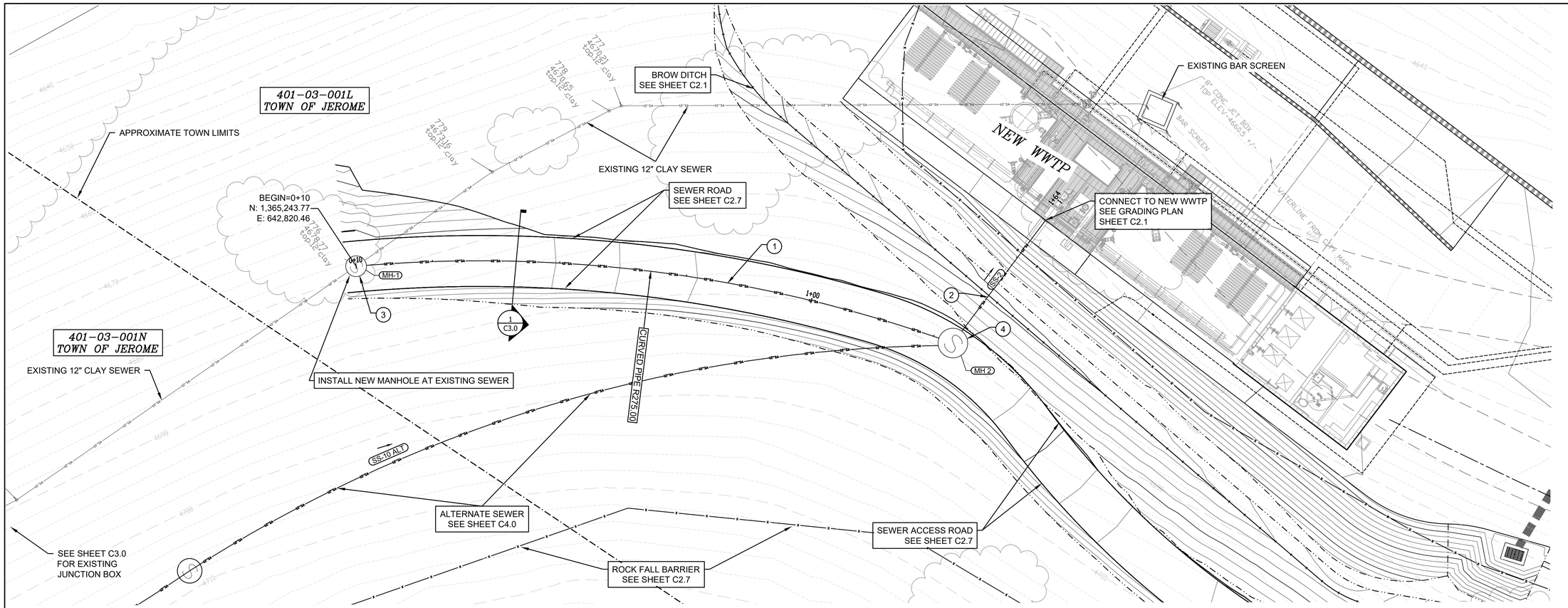

SEWER CALLOUTS. SEE CONSTRUCTION NOTES ON SHEET C3.0	
1	INSTALL 12" FPVC SEWER PIPE. CURVE PIPE @ 275' MIN. RADIUS. SEE NOTE 2, SHEET C3.0
2	INSTALL 12" DIP SEWER LINE
3	INSTALL 48" FLAT TOP SEWER MANHOLE PER MSD 420-1
4	INSTALL 60" SEWER MANHOLE PER MSD 420-1

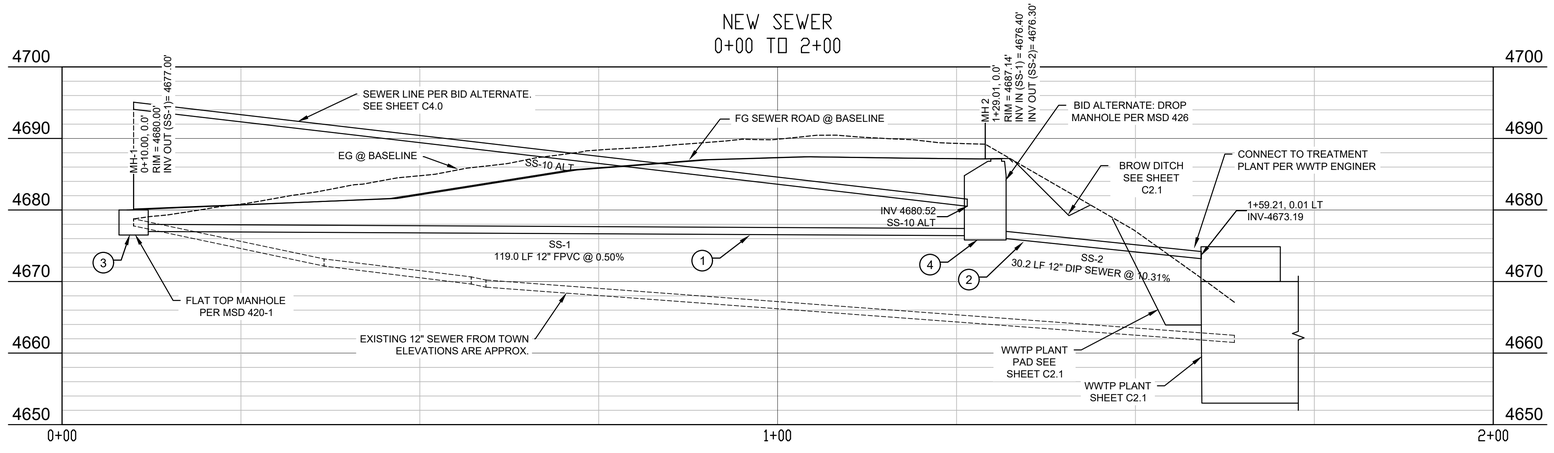

NO	BY	DATE	REVISIONS	DATE	APP.

Professional Engineer
CERTIFICATE NO.
49100
KRISHAN
GEVINDA
GINIGE
10/31/25
DATE SIGNED
ARIZONA, U.S.A.

PREPARED BY:
DESIGNED BY:
DRAWN BY: NMW
CHECKED BY: KG
SCALE: AS SHOWN
DATE 10/31/25
JOB NO. 19-1101CE

TITLE
NEW SEWER P&P

JOB
JEROME WWTP
GRADING & UTILITIES PLANS
YAVAPAI COUNTY AZ

PREPARED BY:
SOUTHWESTERN ENVIRONMENTAL CONSULTANTS, INC
825 COVE PARKWAY
COTTONWOOD, AZ 86326
928-282-7787

SHEET
C3.1
19 OF 99 SHEETS

JOB NO. 19-1101CE

© 2025, SEC, Inc., All Rights Reserved. This document is protected under the United States Copyright Act. No part may be reproduced in any form or by any means or stored in a database or retrieval system, without the prior written permission of SEC, Inc. These plans/documents have been prepared using technical knowledge that would be applied by other qualified registrants who practice the same profession in the same area and at the same time. Efforts have been made to be as accurate as possible. However, plans/documents could contain unintentional technical inaccuracies, typographical errors or omissions. Users of these plans/documents should understand that it is highly probable that errors and omissions will occur in any plan/document preparation process.

S:\LAND PROJECTS 2004 ENGINEERING\19-1101CE JEROME WWTP\DWG\C3D\PLANS\XBSAN-19-1101CE.DWG

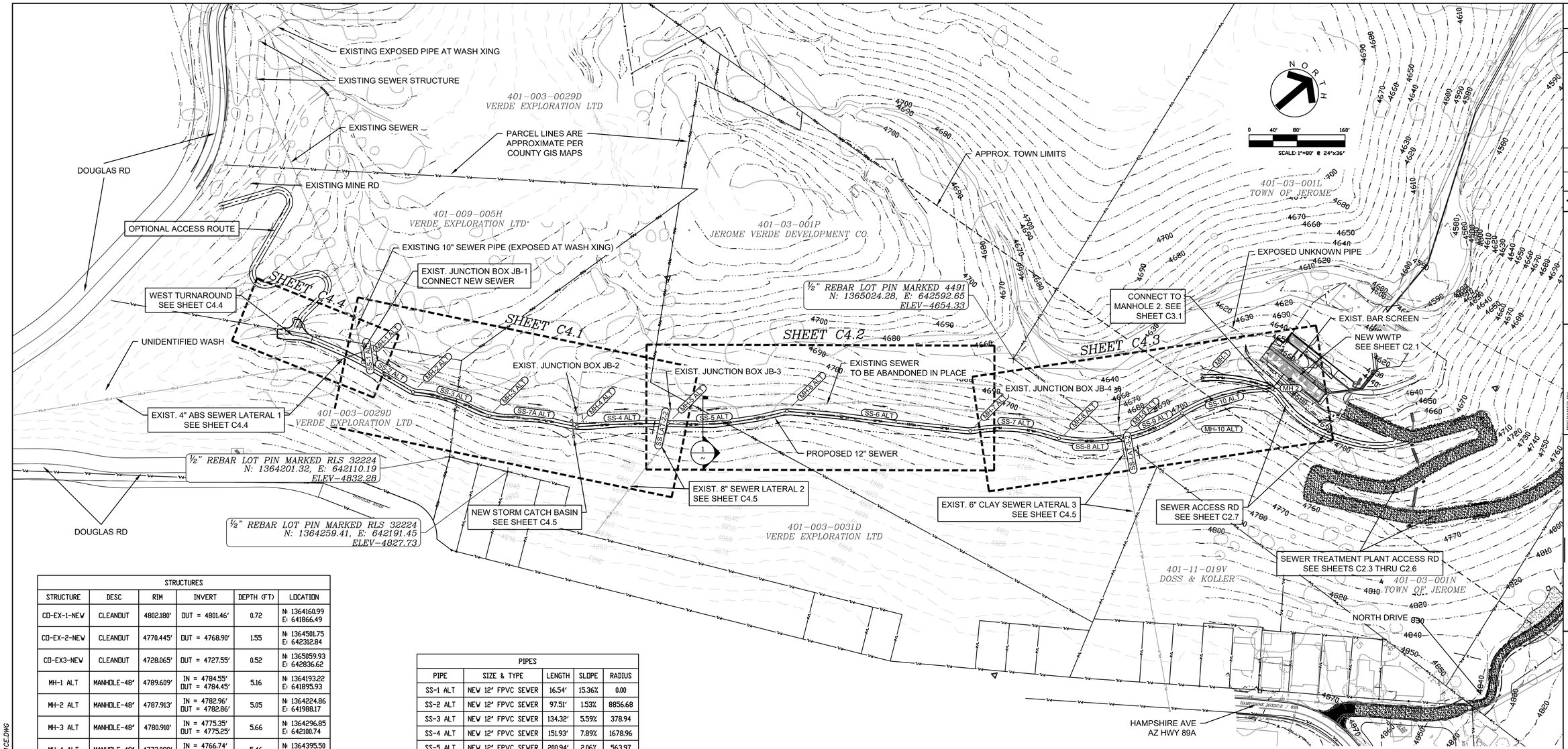

STRUCTURES					
STRUCTURE	DESC	RIM	INVERT	DEPTH (FT)	LOCATION
CO-EX-1-NEW	CLEANOUT	4802.180'	OUT = 4801.46'	0.72	N: 1364160.99 E: 641866.49
CO-EX-2-NEW	CLEANOUT	4770.445'	OUT = 4768.90'	1.55	N: 1364501.75 E: 642312.84
CO-EX3-NEW	CLEANOUT	4728.065'	OUT = 4727.55'	0.52	N: 1365059.93 E: 642836.62
MH-1 ALT	MANHOLE-48"	4789.609'	IN = 4784.55' OUT = 4784.45'	5.16	N: 1364193.22 E: 641895.93
MH-2 ALT	MANHOLE-48"	4787.913'	IN = 4782.96' OUT = 4782.86'	5.05	N: 1364224.86 E: 641988.17
MH-3 ALT	MANHOLE-48"	4780.910'	IN = 4775.35' OUT = 4775.25'	5.66	N: 1364296.85 E: 642100.74
MH-4 ALT	MANHOLE-48"	4772.099'	IN = 4766.74' OUT = 4766.64'	5.46	N: 1364395.50 E: 642208.64
MH-5 ALT	MANHOLE-48"	4759.803'	IN = 4754.64' IN = 4754.85' OUT = 4754.54'	5.26	N: 1364514.63 E: 642302.84
MH-6 ALT	MANHOLE-48"	4754.907'	IN = 4750.41' OUT = 4750.31'	4.59	N: 1364679.90 E: 642415.26
MH-7 ALT	MANHOLE-48"	4729.609'	IN = 4724.18' OUT = 4724.08'	5.53	N: 1364891.34 E: 642638.12
MH-8 ALT	MANHOLE-48"	4712.834'	IN = 4706.04' OUT = 4705.94'	6.89	N: 1364996.38 E: 642743.01
MH-9 ALT	MANHOLE-48"	4705.547'	IN = 4699.49' IN = 4700.39' OUT = 4699.39'	6.16	N: 1365075.93 E: 642809.37
MH-10 ALT	MANHOLE-48"	4704.172'	IN = 4699.06' OUT = 4698.96'	5.21	N: 1365179.64 E: 642843.49

PIPES				
PIPE	SIZE & TYPE	LENGTH	SLOPE	RADIUS
SS-1 ALT	NEW 12" FPVC SEWER	16.54'	15.36%	0.00
SS-2 ALT	NEW 12" FPVC SEWER	97.51'	1.53%	8856.68
SS-3 ALT	NEW 12" FPVC SEWER	134.32'	5.59%	378.94
SS-4 ALT	NEW 12" FPVC SEWER	151.93'	7.89%	1678.96
SS-5 ALT	NEW 12" FPVC SEWER	200.94'	2.06%	563.97
SS-6 ALT	NEW 12" FPVC SEWER	307.21'	8.51%	28124.53
SS-7 ALT	NEW 12" FPVC SEWER	150.27'	12.01%	277.65
SS-7A ALT	NEW 12" FPVC SEWER	146.41'	5.81%	779.23
SS-8 ALT	NEW 12" FPVC SEWER	104.13'	6.20%	296.23
SS-9 ALT	NEW 12" FPVC SEWER	109.85'	0.30%	286.54
SS-10 ALT	NEW 12" FPVC SEWER	155.46'	11.86%	278.54
SS-LAT-3-2	NEW 6' SEWER	27.25'	99.44%	0.00
SS-LAT 1-1	NEW 4' DIP SEWER	25.88'	1.00%	0.00
SS-LAT 1-2	NEW 4' SEWER	16.70'	80.70%	0.00
SS LAT-2-2	NEW 8' SEWER	12.60'	110.87%	0.00
SS LAT-3-1	NEW 6' SEWER	4.35'	1.77%	0.00
SS LAT 2-1	NEW 8' SEWER	3.71'	2.00%	0.00

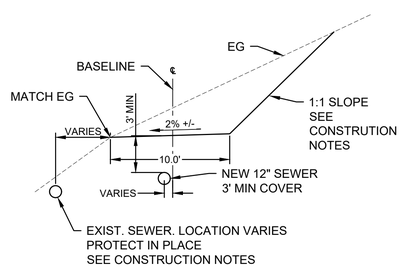

1 TYPICAL CONSTRUCTION ROAD SECTION
1"=6'

CONSTRUCTION NOTES
1. THE EXISTING SEWER IS VERY SHALLOW. EXTREME CAUTION IS REQUIRED TO ENSURE THE PIPE IS PROTECTED DURING CONSTRUCTION. EXISTING SEWER TO REMAIN OPERATIONAL AT ALL TIMES UNTIL THE NEW SEWER IS ACTIVATED.
2. THE EXISTING LATERAL SEWERS SHALL BE TEMPORARILY RE-ROUTED AS NEEDED DURING CONSTRUCTION. TO REMAIN OPERATIONAL UNTIL THE NEW SEWER IS ACTIVATED
3. WASTE MATERIAL FROM THE SEWER AND ROAD CONSTRUCTION SHALL BE REMOVED FROM PRIVATELY OWNED PROPERTIES.
4. CUT SLOPES STEEPER THAN 2:1 SHOULD BE EVALUATED AND APPROVED BY GEOTECHNICAL ENGINEER.
5. ALL TEMPORARY AND NEW SEWER PIPES AND STRUCTURES SHALL BE INSTALLED PER THE SPECIFICATIONS PROVIDED BY THE SEWER PLANT ENGINEER.
6. NEW EASEMENTS ARE NEEDED FOR BOTH EXISTING AND PROPOSED SEWER ACROSS PRIVATE PROPERTIES. TO BE COORDINATED BY THE TOWN.

EARTHWORK ESTIMATE (CUBIC YARDS)*			
	CUT	FILL	NET
SEWER ROAD	4,043	33	4010 CUT
*NO SHRINKAGE OR EXPANSION FACTORS APPLIED. EARTHWORK IS TO FINISHED GRADE. DEPTH TO SUBGRADE AND PIPE TRENCHING NOT ACCOUNTED FOR			

ESTIMATE OF SEWER QTY'S		
ITEM	QTY	UNITS
12" FPVC PIPE	1,568	LF
4" PVC SEWER	43	LF
6" PVC SEWER	32	LF
8" PVC SEWER	16	LF
48" MANHOLE	10	EA
CLEANOUT	3	EA

NO	BY	DATE	REVISIONS	DATE	APP.

Registered Professional Engineer
49108 KRISHAN GEVINDA GINIGE 10/31/25 DATE SIGNED ARIZONA, U.S.A.

PREPARED BY:
DESIGNED BY:
DRAWN BY: NMW
CHECKED BY: KG
DATE 10/31/25
SCALE: AS SHOWN
JOB NO. 19-1101CE

TITLE: ALT SEWER SITE MAP, SURVEY CONTROL

JOB: JEROME WWTP GRADING & UTILITIES PLANS

YAVAPAI COUNTY AZ

PREPARED BY:
SOUTHWESTERN ENVIRONMENTAL CONSULTANTS, INC
825 COVE PARKWAY
COTTONWOOD, AZ 86326
928-282-7787

SHEET
C4.0
20 OF 99 SHEETS

JOB NO. 19-1101CE

© 2025, SEC, Inc., All Rights Reserved. This document is protected under the United States Copyright Act. No part may be reproduced in any form or by any means or stored in a database or retrieval system, without the prior written permission of SEC, Inc. These plans/documents could contain unintentional technical inaccuracies, typographical errors or omissions. Users of these plans/documents should understand that it is highly probable that errors and omissions will occur in any plan/document preparation process. However, plans/documents are prepared using technical knowledge that would be applied by other qualified registrants who practice this same profession in the same area and at the same time. Efforts have been made to be as accurate as possible.

S:\LAND PROJECTS 2004 ENGINEERING\19-1101CE JEROME WWTP\DWG\C3D\PLANS\XBSAN-ALT-19-1101CE.DWG

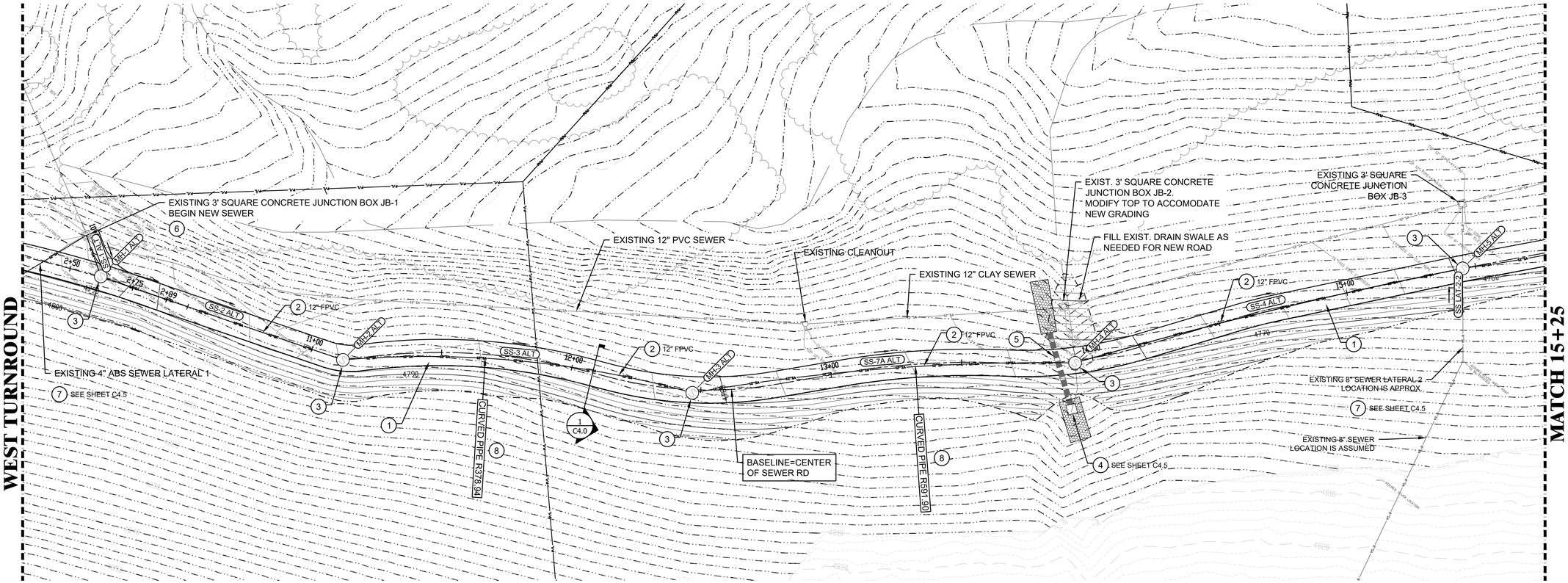

SEWER CALLOUTS. SEE CONSTRUCTION NOTES ON SHEET C4.0	
1	EXCAVATE SEWER CONSTRUCTION ROAD PER DETAIL 1, SHEET C4.0
2	INSTALL SEWER PIPE. SIZE AND TYPE PER PLAN. SEE NOTE 5, SHEET C4.0
3	INSTALL 48" SEWER MANHOLE PER MSD 420-1
4	INSTALL CATCH BASIN. SEE SHEET C4.5
5	INSTALL CULVERT. SEE SHEET C4.5
6	CONNECT NEW SEWER PIPE TO EXISTING JUNCTION BOX. CONTRACTOR TO PROVIDE DETAILS & SHOP DRAWINGS TO PROJECT ENGINEER FOR APPROVAL PRIOR TO CONNECTION.
7	PROTECT EXISTING SEWER LATERAL IN PLACE. CONNECT TO NEW SEWER WHEN ACTIVE. SEE PROFILES FOR DETAILS
8	INSTALL CURVED SEWER PIPE. RADIUS PER PLAN. SEE NOTE 5, SHEET C4.0.

CONSTRUCTION NOTES

1. THE EXISTING SEWER PIPES ARE VERY SHALLOW. EXTREME CAUTION IS REQUIRED TO ENSURE THE PIPES ARE PROTECTED DURING CONSTRUCTION. EXISTING SEWER TO REMAIN OPERATIONAL AT ALL TIMES UNTIL THE NEW SEWER IS ACTIVATED.
2. THE EXISTING LATERAL SEWERS SHALL BE TEMPORARILY RE-ROUTED AS NEEDED DURING CONSTRUCTION UNTIL THE NEW SEWER IS ACTIVATED.
3. WASTE MATERIAL FROM THE SEWER AND ROAD CONSTRUCTION SHALL BE REMOVED FROM PRIVATELY OWNED PROPERTIES.
4. CUT SLOPES STEEPER THAN 2:1 SHOULD BE EVALUATED AND APPROVED BY GEOTECHNICAL ENGINEER.
5. ALL TEMPORARY AND NEW SEWER PIPES AND STRUCTURES SHALL BE INSTALLED PER THE SPECIFICATIONS PROVIDED BY THE SEWER PLANT ENGINEER.
6. NEW EASEMENTS ARE NEEDED FOR BOTH EXISTING AND PROPOSED SEWER ACROSS PRIVATE LAND. TO BE COORDINATED BY THE TOWN.

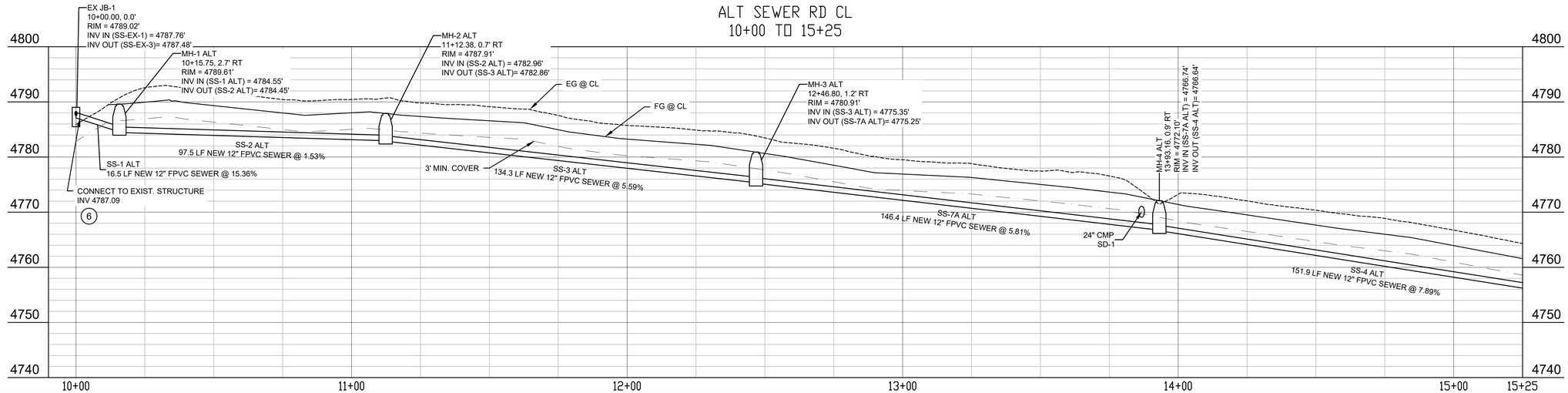

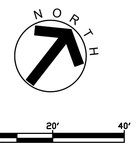

S:\LAND PROJECTS 2004 ENGINEERING\19-1101CE JEROME WWTP\DWG\C3D\PLANS\XBSAN-ALT-19-1101CE.DWG

NO	BY	DATE	REVISIONS	DATE	APP.



PREPARED BY:
DESIGNED BY:
DRAWN BY: NMW
CHECKED BY: KG
SCALE: AS SHOWN
DATE 10/31/25
JOB NO. 19-1101CE

TITLE *ALT SEWER P&P 10+00 TO 15+25*

JOB *JEROME WWTP GRADING & UTILITIES PLANS*

YAVAPAI COUNTY AZ

PREPARED BY:

SOUTHWESTERN ENVIRONMENTAL CONSULTANTS, INC
825 COVE PARKWAY
COTTONWOOD, AZ 86326
928-282-7787

SHEET
C4.1
21 OF 99 SHEETS

JOB NO. 19-1101CE

© 2025, SEC, Inc., All Rights Reserved. This document is protected under the United States Copyright Act. No part may be reproduced in any form or by any means or stored in a database or retrieval system, without the prior written permission of SEC, Inc. These plans/documents have been prepared using technical knowledge that would be applied by other qualified registrants who practice the same profession in the same area and at the same time. Efforts have been made to be as accurate as possible. However, plans/documents could contain unintentional technical inaccuracies, typographical errors or omissions. Users of these plans/documents should understand that it is highly probable that errors and omissions will occur in any plan/document preparation process.

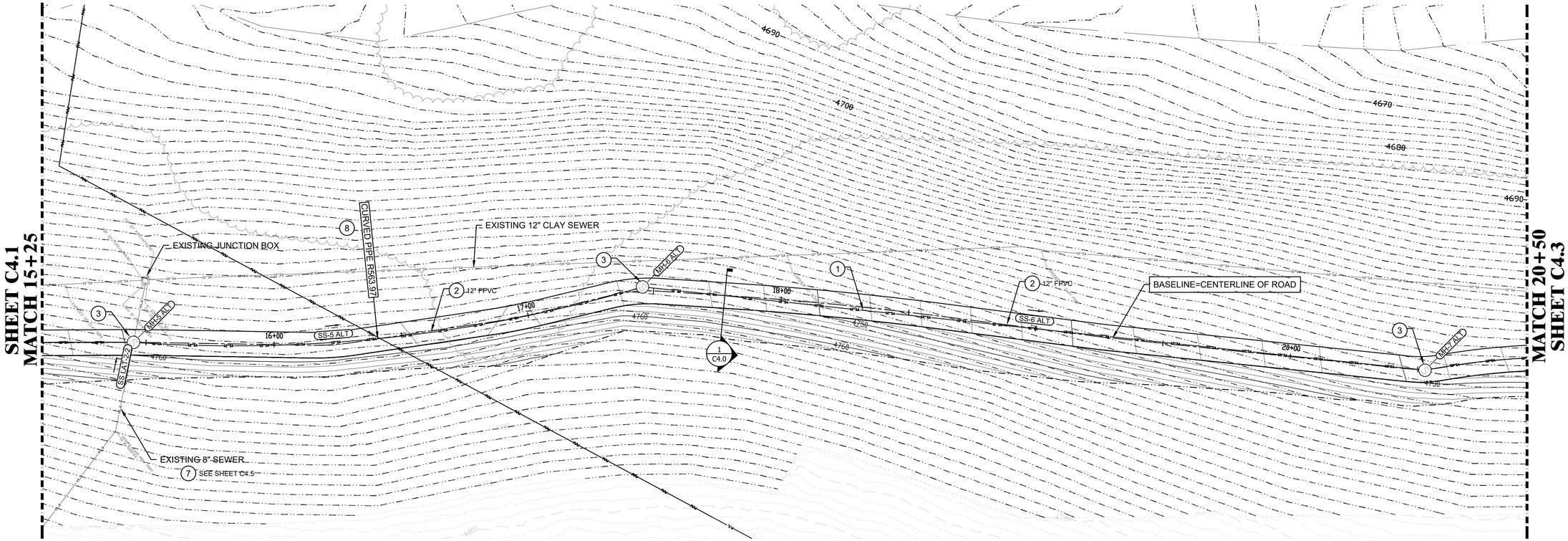

SEWER CALLOUTS. SEE CONSTRUCTION NOTES ON SHEET C4.0	
1	EXCAVATE SEWER CONSTRUCTION ROAD PER DETAIL 1, SHEET C4.0
2	INSTALL SEWER PIPE. SIZE AND TYPE PER PLAN. SEE NOTE 5, SHEET C4.0
3	INSTALL 48" SEWER MANHOLE PER MSD 420-1
4	INSTALL CATCH BASIN. SEE SHEET C4.5
5	INSTALL CULVERT. SEE SHEET C4.5
6	CONNECT NEW SEWER PIPE TO EXISTING JUNCTION BOX. CONTRACTOR TO PROVIDE DETAILS & SHOP DRAWINGS TO PROJECT ENGINEER FOR APPROVAL PRIOR TO CONNECTION.
7	PROTECT EXISTING SEWER LATERAL IN PLACE. CONNECT TO NEW SEWER WHEN ACTIVE. SEE PROFILES FOR DETAILS
8	INSTALL CURVED SEWER PIPE. RADIUS PER PLAN. SEE NOTE 5, SHEET C4.0.

CONSTRUCTION NOTES

1. THE EXISTING SEWER PIPES ARE VERY SHALLOW. EXTREME CAUTION IS REQUIRED TO ENSURE THE PIPES ARE PROTECTED DURING CONSTRUCTION. EXISTING SEWER TO REMAIN OPERATIONAL AT ALL TIMES UNTIL THE NEW SEWER IS ACTIVATED.
2. THE EXISTING LATERAL SEWERS SHALL BE TEMPORARILY RE-ROUTED AS NEEDED DURING CONSTRUCTION UNTIL THE NEW SEWER IS ACTIVATED.
3. WASTE MATERIAL FROM THE SEWER AND ROAD CONSTRUCTION SHALL BE REMOVED FROM PRIVATELY OWNED PROPERTIES.
4. CUT SLOPES STEEPER THAN 2:1 SHOULD BE EVALUATED AND APPROVED BY GEOTECHNICAL ENGINEER.
5. ALL TEMPORARY AND NEW SEWER PIPES AND STRUCTURES SHALL BE INSTALLED PER THE SPECIFICATIONS PROVIDED BY THE SEWER PLANT ENGINEER.
6. NEW EASEMENTS ARE NEEDED FOR BOTH EXISTING AND PROPOSED SEWER ACROSS PRIVATE LAND. TO BE COORDINATED BY THE TOWN.

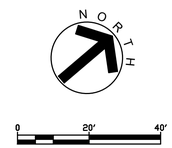

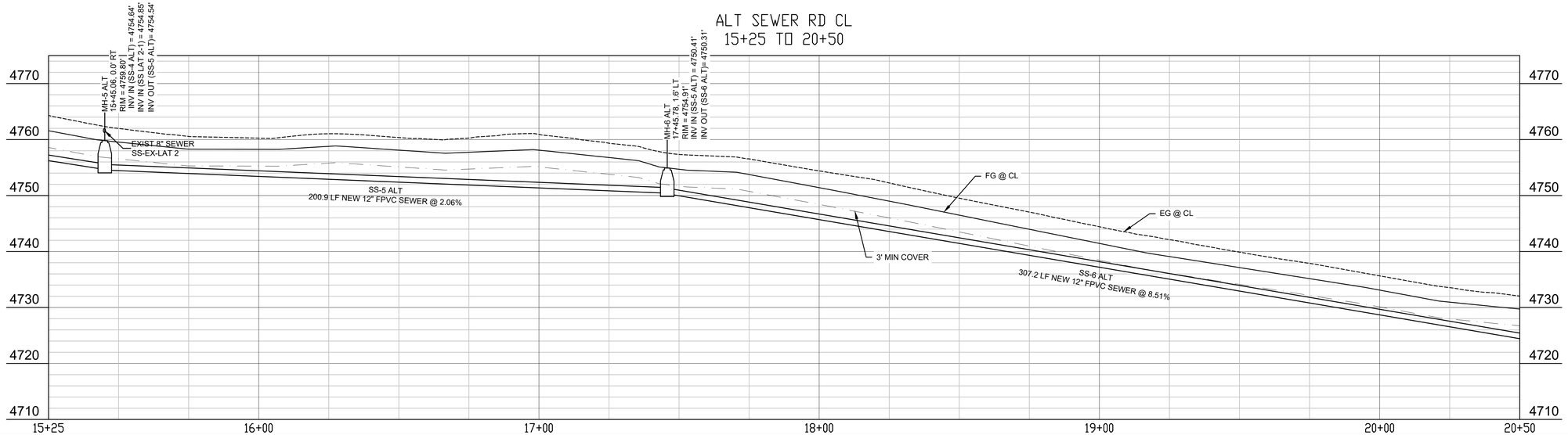

PREPARED BY:
DESIGNED BY:
DRAWN BY: NMW
CHECKED BY: KG
DATE 10/31/25
JOB NO. 19-1101CE
SCALE: AS SHOWN

NO	BY	DATE	REVISIONS	DATE	APP.

49108
KRISHAN GEVINDA GINIGE
10/31/25
REGISTERED PROFESSIONAL ENGINEER
ARIZONA, U.S.A.

TITLE
ALT SEWER P&P 15+25 TO 20+50

JOB
JEROME WWTP
GRADING & UTILITIES PLANS
YAVAPAI COUNTY AZ

PREPARED BY:
SEC Inc.
SOUTHWESTERN ENVIRONMENTAL CONSULTANTS, INC
825 COVE PARKWAY
COTTONWOOD, AZ 86326
928-282-7787

SHEET
C4.2
22 OF 99 SHEETS

JOB NO. 19-1101CE

© 2025, SEC, Inc., All Rights Reserved. This document is protected under the United States Copyright Act. No part may be reproduced in any form or by any means or stored in a database or retrieval system, without the prior written permission of SEC, Inc. These plans/documents have been prepared using technical knowledge that would be applied by other qualified registrants who practice the same profession in the same area and at the same time. Efforts have been made to be as accurate as possible. However, plans/documents could contain unintentional technical inaccuracies, typographical errors or omissions. Users of these plans/documents should understand that it is highly probable that errors and omissions will occur in any plan/document preparation process.

S:\LAND PROJECTS 2004 ENGINEERING\19-1101CE JEROME WWTP\DWG\C3D\PLANS\XBSAN-ALT-19-1101CE.DWG

SHEET C4.2
MATCH 20+50

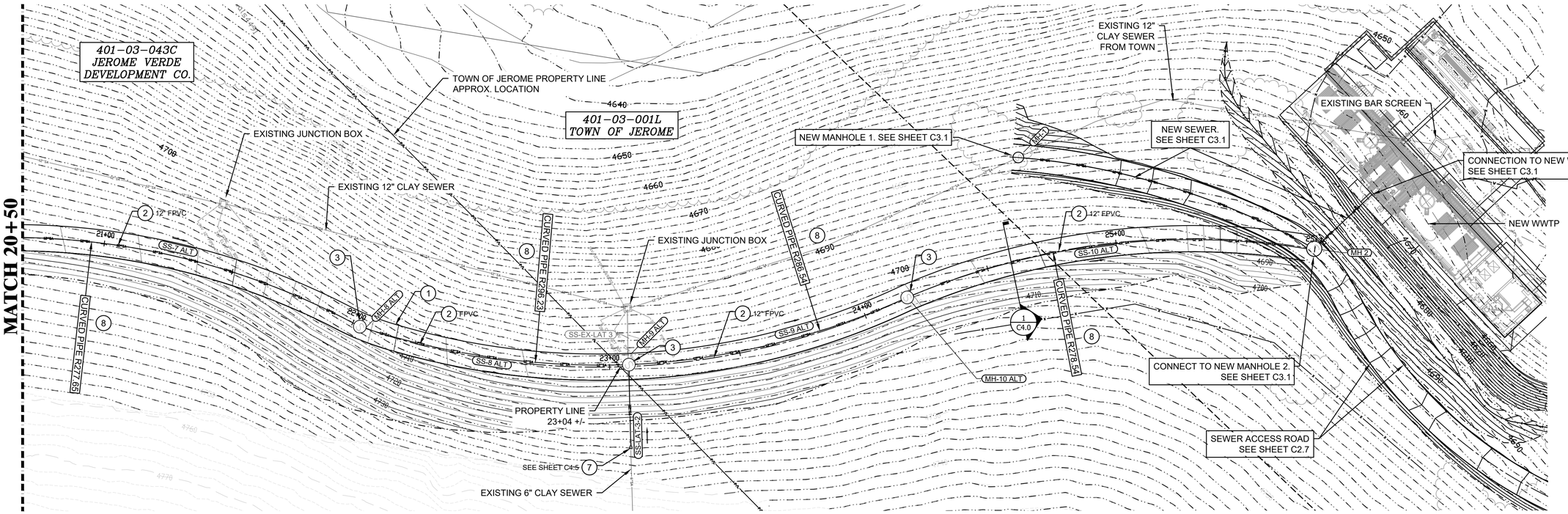

SEWER CALLOUTS. SEE CONSTRUCTION NOTES ON SHEET C4.0	
1	EXCAVATE SEWER CONSTRUCTION ROAD PER DETAIL 1, SHEET C4.0
2	INSTALL SEWER PIPE. SIZE AND TYPE PER PLAN. SEE NOTE 5, SHEET C4.0
3	INSTALL 48" SEWER MANHOLE PER MSD 420-1
4	INSTALL CATCH BASIN. SEE SHEET C4.5
5	INSTALL CULVERT. SEE SHEET C4.5
6	CONNECT NEW SEWER PIPE TO EXISTING JUNCTION BOX. CONTRACTOR TO PROVIDE DETAILS & SHOP DRAWINGS TO PROJECT ENGINEER FOR APPROVAL PRIOR TO CONNECTION.
7	PROTECT EXISTING SEWER LATERAL IN PLACE. CONNECT TO NEW SEWER WHEN ACTIVE. SEE PROFILES FOR DETAILS
8	INSTALL CURVED SEWER PIPE. RADIUS PER PLAN. SEE NOTE 5, SHEET C4.0.

CONSTRUCTION NOTES

1. THE EXISTING SEWER PIPES ARE VERY SHALLOW. EXTREME CAUTION IS REQUIRED TO ENSURE THE PIPES ARE PROTECTED DURING CONSTRUCTION. EXISTING SEWER TO REMAIN OPERATIONAL AT ALL TIMES UNTIL THE NEW SEWER IS ACTIVATED.
2. THE EXISTING LATERAL SEWERS SHALL BE TEMPORARILY RE-ROUTED AS NEEDED DURING CONSTRUCTION UNTIL THE NEW SEWER IS ACTIVATED.
3. WASTE MATERIAL FROM THE SEWER AND ROAD CONSTRUCTION SHALL BE REMOVED FROM PRIVATELY OWNED PROPERTIES.
4. CUT SLOPES STEEPER THAN 2:1 SHOULD BE EVALUATED AND APPROVED BY GEOTECHNICAL ENGINEER.
5. ALL TEMPORARY AND NEW SEWER PIPES AND STRUCTURES SHALL BE INSTALLED PER THE SPECIFICATIONS PROVIDED BY THE SEWER PLANT ENGINEER.
6. NEW EASEMENTS ARE NEEDED FOR BOTH EXISTING AND PROPOSED SEWER ACROSS PRIVATE LAND. TO BE COORDINATED BY THE TOWN.

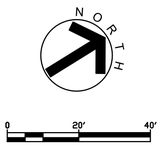

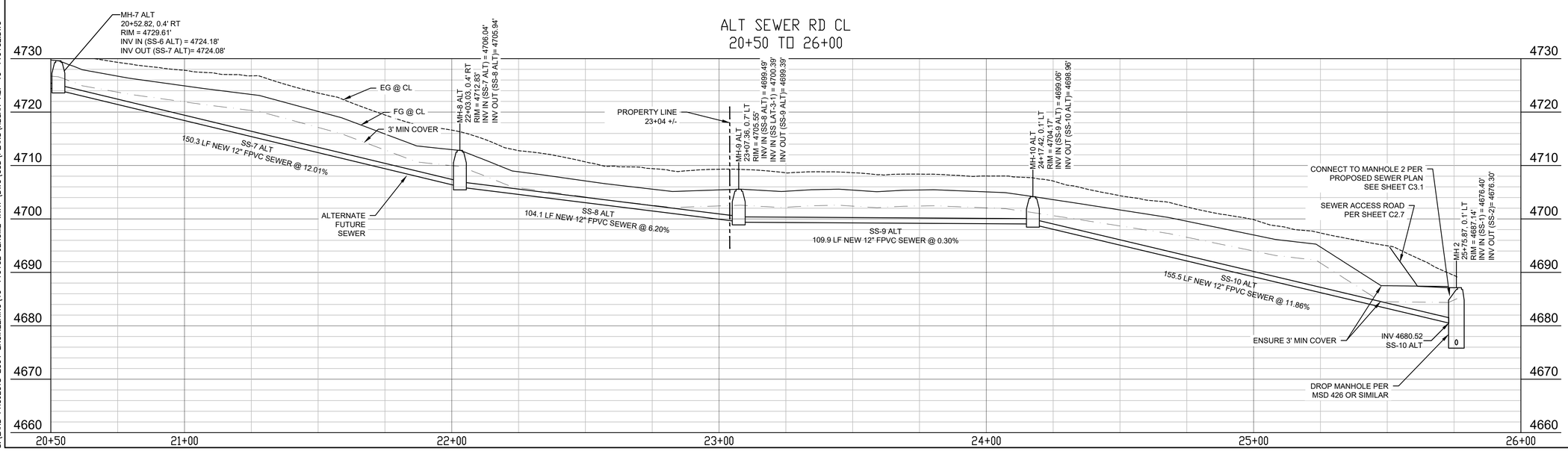

NO	BY	DATE	REVISIONS	DATE	APP.

PREPARED BY:
DESIGNED BY:
DRAWN BY: NMW
CHECKED BY: KG
DATE 10/31/25
JOB NO. 19-1101CE
SCALE: AS SHOWN

49108
KRISHAN
GEVINDA
GINIGE
10/31/25
REGISTERED PROFESSIONAL ENGINEER
ARIZONA, U.S.A.

TITLE
ALT SEWER P&P 20+50 TO 26+00

JOB
JEROME WWTP
GRADING & UTILITIES PLANS
YAVAPAI COUNTY AZ

PREPARED BY:
SEC Inc.
SOUTHWESTERN ENVIRONMENTAL CONSULTANTS, INC
825 COVE PARKWAY
COTTONWOOD, AZ 86326
928-282-7787

SHEET
C4.3
23 OF 99 SHEETS

JOB NO. 19-1101CE

© 2025 SEC, Inc., All Rights Reserved. This document is protected under the United States Copyright Act. No part may be reproduced in any form or by any means or stored in a database or retrieval system, without the prior written permission of SEC, Inc. These plans/documents have been prepared using technical knowledge that would be applied by other qualified registrants who practice the same profession in the same area and at the same time. Efforts have been made to be as accurate as possible. However, plans/documents could contain unintentional technical inaccuracies, typographical errors or omissions. Users of these plans/documents should understand that it is highly probable that errors and omissions will occur in any plan/document preparation process.

S:\LAND PROJECTS 2004 ENGINEERING\19-1101CE JEROME WWTP\DWG\C3D\PLANS\XBSAN-ALT-19-1101CE.DWG

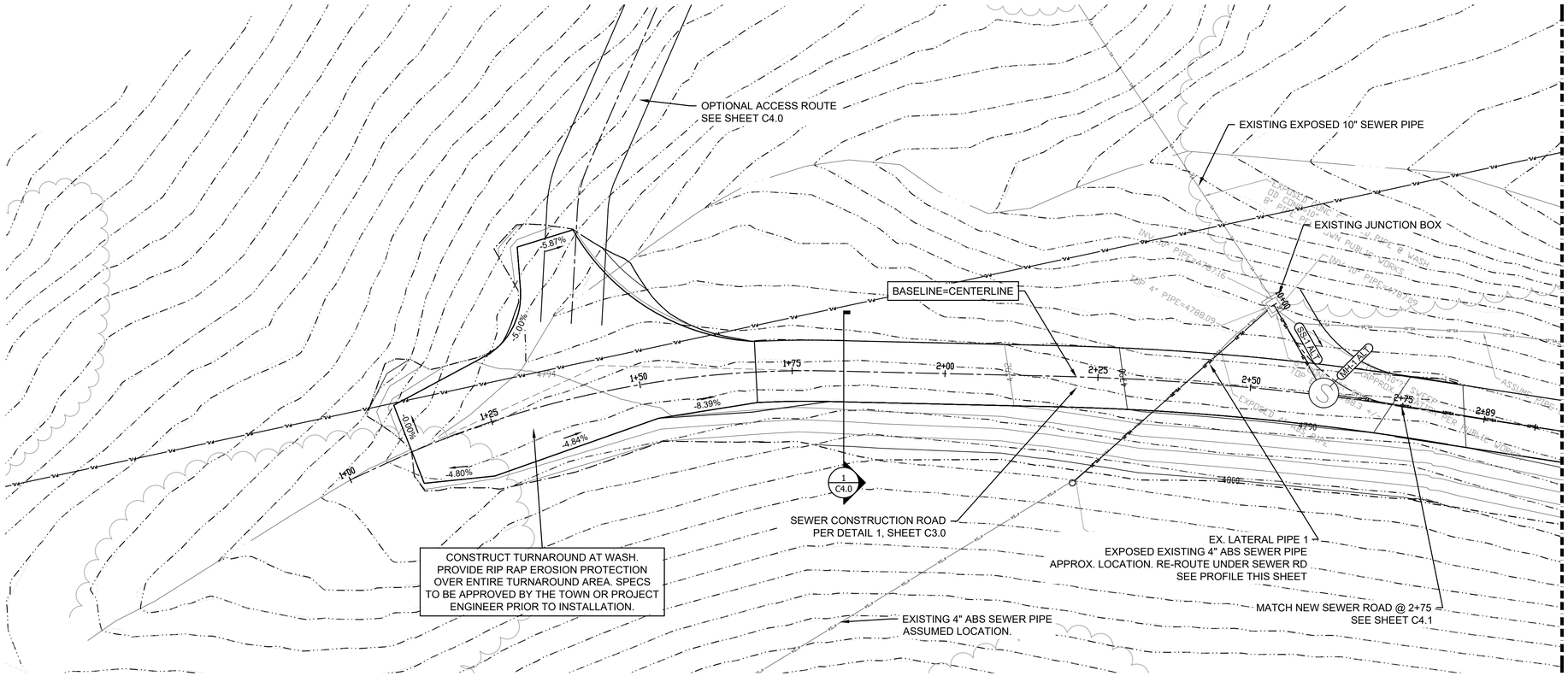
OPTIONAL ACCESS ROUTE
SEE SHEET C4.0
EXISTING EXPOSED 10" SEWER PIPE
EXISTING JUNCTION BOX
BASELINE=CENTERLINE
MATCH SEWER ROAD
SEE SHEET C4.1
-5.87%
-5.00%
-8.39%
-4.84%
-4.80%
-4.00%
1+00
1+25
1+50
1+75
2+00
2+25
2+50
2+75
2+89
4794
4792
4790
4788
4786
4784
4782
4780
4778
4776
4774
4772
4770
4768
4766
4764
4762
4760
4758
4756
4754
4752
4750
4748
4746
4744
4742
4740
4738
4736
4734
4732
4730
4728
4726
4724
4722
4720
4718
4716
4714
4712
4710
4708
4706
4704
4702
4700
4698
4696
4694
4692
4690
4688
4686
4684
4682
4680
4678
4676
4674
4672
4670
4668
4666
4664
4662
4660
4658
4656
4654
4652
4650
4648
4646
4644
4642
4640
4638
4636
4634
4632
4630
4628
4626
4624
4622
4620
4618
4616
4614
4612
4610
4608
4606
4604
4602
4600
4598
4596
4594
4592
4590
4588
4586
4584
4582
4580
4578
4576
4574
4572
4570
4568
4566
4564
4562
4560
4558
4556
4554
4552
4550
4548
4546
4544
4542
4540
4538
4536
4534
4532
4530
4528
4526
4524
4522
4520
4518
4516
4514
4512
4510
4508
4506
4504
4502
4500
4498
4496
4494
4492
4490
4488
4486
4484
4482
4480
4478
4476
4474
4472
4470
4468
4466
4464
4462
4460
4458
4456
4454
4452
4450
4448
4446
4444
4442
4440
4438
4436
4434
4432
4430
4428
4426
4424
4422
4420
4418
4416
4414
4412
4410
4408
4406
4404
4402
4400
4398
4396
4394
4392
4390
4388
4386
4384
4382
4380
4378
4376
4374
4372
4370
4368
4366
4364
4362
4360
4358
4356
4354
4352
4350
4348
4346
4344
4342
4340
4338
4336
4334
4332
4330
4328
4326
4324
4322
4320
4318
4316
4314
4312
4310
4308
4306
4304
4302
4300
4298
4296
4294
4292
4290
4288
4286
4284
4282
4280
4278
4276
4274
4272
4270
4268
4266
4264
4262
4260
4258
4256
4254
4252
4250
4248
4246
4244
4242
4240
4238
4236
4234
4232
4230
4228
4226
4224
4222
4220
4218
4216
4214
4212
4210
4208
4206
4204
4202
4200
4198
4196
4194
4192
4190
4188
4186
4184
4182
4180
4178
4176
4174
4172
4170
4168
4166
4164
4162
4160
4158
4156
4154
4152
4150
4148
4146
4144
4142
4140
4138
4136
4134
4132
4130
4128
4126
4124
4122
4120
4118
4116
4114
4112
4110
4108
4106
4104
4102
4100
4098
4096
4094
4092
4090
4088
4086
4084
4082
4080
4078
4076
4074
4072
4070
4068
4066
4064
4062
4060
4058
4056
4054
4052
4050
4048
4046
4044
4042
4040
4038
4036
4034
4032
4030
4028
4026
4024
4022
4020
4018
4016
4014
4012
4010
4008
4006
4004
4002
4000
3998
3996
3994
3992
3990
3988
3986
3984
3982
3980
3978
3976
3974
3972
3970
3968
3966
3964
3962
3960
3958
3956
3954
3952
3950
3948
3946
3944
3942
3940
3938
3936
3934
3932
3930
3928
3926
3924
3922
3920
3918
3916
3914
3912
3910
3908
3906
3904
3902
3900
3898
3896
3894
3892
3890
3888
3886
3884
3882
3880
3878
3876
3874
3872
3870
3868
3866
3864
3862
3860
3858
3856
3854
3852
3850
3848
3846
3844
3842
3840
3838
3836
3834
3832
3830
3828
3826
3824
3822
3820
3818
3816
3814
3812
3810
3808
3806
3804
3802
3800
3798
3796
3794
3792
3790
3788
3786
3784
3782
3780
3778
3776
3774
3772
3770
3768
3766
3764
3762
3760
3758
3756
3754
3752
3750
3748
3746
3744
3742
3740
3738
3736
3734
3732
3730
3728
3726
3724
3722
3720
3718
3716
3714
3712
3710
3708
3706
3704
3702
3700
3698
3696
3694
3692
3690
3688
3686
3684
3682
3680
3678
3676
3674
3672
3670
3668
3666
3664
3662
3660
3658
3656
3654
3652
3650
3648
3646
3644
3642
3640
3638
3636
3634
3632
3630
3628
3626
3624
3622
3620
3618
3616
3614
3612
3610
3608
3606
3604
3602
3600
3598
3596
3594
3592
3590
3588
3586
3584
3582
3580
3578
3576
3574
3572
3570
3568
3566
3564
3562
3560
3558
3556
3554
3552
3550
3548
3546
3544
3542
3540
3538
3536
3534
3532
3530
3528
3526
3524
3522
3520
3518
3516
3514
3512
3510
3508
3506
3504
3502
3500
3498
3496
3494
3492
3490
3488
3486
3484
3482
3480
3478
3476
3474
3472
3470
3468
3466
3464
3462
3460
3458
3456
3454
3452
3450
3448
3446
3444
3442
3440
3438
3436
3434
3432
3430
3428
3426
3424
3422
3420
3418
3416
3414
3412
3410
3408
3406
3404
3402
3400
3398
3396
3394
3392
3390
3388
3386
3384
3382
3380
3378
3376
3374
3372
3370
3368
3366
3364
3362
3360
3358
3356
3354
3352
3350
3348
3346
3344
3342
3340
3338
3336
3334
3332
3330
3328
3326
3324
3322
3320
3318
3316
3314
3312
3310
3308
3306
3304
3302
3300
3298
3296
3294
3292
3290
3288
3286
3284
3282
3280
3278
3276
3274
3272
3270
3268
3266
3264
3262
3260
3258
3256
3254
3252
3250
3248
3246
3244
3242
3240
3238
3236
3234
3232
3230
3228
3226
3224
3222
3220
3218
3216
3214
3212
3210
3208
3206
3204
3202
3200
3198
3196
3194
3192
3190
3188
3186
3184
3182
3180
3178
3176
3174
3172
3170
3168
3166
3164
3162
3160
3158
3156
3154
3152
3150
3148
3146
3144
3142
3140
3138
3136
3134
3132
3130
3128
3126
3124
3122
3120
3118
3116
3114
3112
3110
3108
3106
3104
3102
3100
3098
3096
3094
3092
3090
3088
3086
3084
3082
3080
3078
3076
3074
3072
3070
3068
3066
3064
3062
3060
3058
3056
3054
3052
3050
3048
3046
3044
3042
3040
3038
3036
3034
3032
3030
3028
3026
3024
3022
3020
3018
3016
3014
3012
3010
3008
3006
3004
3002
3000
2998
2996
2994
2992
2990
2988
2986
2984
2982
2980
2978
2976
2974
2972
2970
2968
2966
2964
2962
2960
2958
2956
2954
2952
2950
2948
2946
2944
2942
2940
2938
2936
2934
2932
2930
2928
2926
2924
2922
2920
2918
2916
2914
2912
2910
2908
2906
2904
2902
2900
2898
2896
2894
2892
2890
2888
2886
2884
2882
2880
2878
2876
2874
2872
2870
2868
2866
2864
2862
2860
2858
2856
2854
2852
2850
2848
2846
2844
2842
2840
2838
2836
2834
2832
2830
2828
2826
2824
2822
2820
2818
2816
2814
2812
2810
2808
2806
2804
2802
2800
2798
2796
2794
2792
2790
2788
2786
2784
2782
2780
2778
2776
2774
2772
2770
2768
2766
2764
2762
2760
2758
2756
2754
2752
2750
2748
2746
2744
2742
2740
2738
2736
2734
2732
2730
2728
2726
2724
2722
2720
2718
2716
2714
2712
2710
2708
2706
2704
2702
2700
2698
2696
2694
2692
2690
2688
2686
2684
2682
2680
2678
2676
2674
2672
2670
2668
2666
2664
2662
2660
2658
2656
2654
2652
2650
2648
2646
2644
2642
2640
2638
2636
2634
2632
2630
2628
2626
2624
2622
2620
2618
2616
2614
2612
2610
2608
2606
2604
2602
2600
2598
2596
2594
2592
2590
2588
2586
2584
2582
2580
2578
2576
2574
2572
2570
2568
2566
2564
2562
2560
2558
2556
2554
2552
2550
2548
2546
2544
2542
2540
2538
2536
2534
2532
2530
2528
2526
2524
2522
2520
2518
2516
2514
2512
2510
2508
2506
2504
2502
2500
2498
2496
2494
2492
2490
2488
2486
2484
2482
2480
2478
2476
2474
2472
2470
2468
2466
2464
2462
2460
2458
2456
2454
2452
2450
2448
2446
2444
2442
2440
2438
2436
2434
2432
2430
2428
2426
2424
2422
2420
2418
2416
2414
2412
2410
2408
2406
2404
2402
2400
2398
2396
2394
2392
2390
2388
2386
2384
2382
2380
2378
2376
2374
2372
2370
2368
2366
2364
2362
2360
2358
2356
2354
2352
2350
2348
2346
2344
2342
2340
2338
2336
2334
2332
2330
2328
2326
2324
2322
2320
2318
2316
2314
2312
2310
2308
2306
2304
2302
2300
2298
2296
2294
2292
2290
2288
2286
2284
2282
2280
2278
2276
2274
2272
2270
2268
2266
2264
2262
2260
2258
2256
2254
2252
2250
2248
2246
2244
2242
2240
2238
2236
2234
2232
2230
2228
2226
2224
2222
2220
2218
2216
2214
2212
2210
2208
2206
2204
2202
2200
2198
2196
2194
2192
2190
2188
2186
2184
2182
2180
2178
2176
2174
2172
2170
2168
2166
2164
2162
2160
2158
2156
2154
2152
2150
2148
2146
2144
2142
2140
2138
2136
2134
2132
2130
2128
2126
2124
2122
2120
2118
2116
2114
2112
2110
2108
2106
2104
2102
2100
2098
2096
2094
2092
2090
2088
2086
2084
2082
2080
2078
2076
2074
2072
2070
2068
2066
2064
2062
2060
2058
2056
2054
2052
2050
2048
2046
2044
2042
2040
2038
2036
2034
2032
2030
2028
2026
2024
2022
2020
2018
2016
2014
2012
2010
2008
2006
2004
2002
2000
1998
1996
1994
1992
1990
1988
1986
1984
1982
1980
1978
1976
1974
1972
1970
1968
1966
1964
1962
1960
1958
1956
1954
1952
1950
1948
1946
1944
1942
1940
1938
1936
1934
1932
1930
1928
1926
1924
1922
1920
1918
1916
1914
1912
1910
1908
1906
1904
1902
1900
1898
1896
1894
1892
1890
1888
1886
1884
1882
1880
1878
1876
1874
1872
1870
1868
1866
1864
1862
1860
1858
1856
1854
1852
1850
1848
1846
1844
1842
1840
1838
1836
1834
1832
1830
1828
1826
1824
1822
1820
1818
1816
1814
1812
1810
1808
1806
1804
1802
1800
1798
1796
1794
1792
1790
1788
1786
1784
1782
1780
1778
1776
1774
1772
1770
1768
1766
1764
1762
1760
1758
1756
1754
1752
1750
1748
1746
1744
1742
1740
1738
1736
1734
1732
1730
1728
1726
1724
1722
1720
1718
1716
1714
1712
1710
1708
1706
1704
1702
1700
1698
1696
1694
1692
1690
1688
1686
1684
1682
1680
1678
1676
1674
1672
1670
1668
1666
1664
1662
1660
1658
1656
1654
1652
1650
1648
1646
1644
1642
1640
1638
1636
1634
1632
1630
1628
1626
1624
1622
1620
1618
1616
1614
1612
1610
1608
1606
1604
1602
1600
1598
1596
1594
1592
1590
1588
1586
1584
1582
1580
1578
1576
1574
1572
1570
1568
1566
1564
1562
1560
1558
1556
1554
1552
1550
1548
1546
1544
1542
1540
1538
1536
1534
1532
1530
1528
1526
1524
1522
1520
1518
1516
1514
1512
1510
1508
1506
1504
1502
1500
1498
1496
1494
1492
1490
1488
1486
1484
1482
1480
1478
1476
1474
1472
1470
1468
1466
1464
1462
1460
1458
1456
1454
1452
1450
1448
1446
1444
1442
1440
1438
1436
1434
1432
1430
1428
1426
1424
1422
1420
1418
1416
1414
1412
1410
1408
1406
1404
1402
1400
1398
1396
1394
1392
1390
1388
1386
1384
1382
1380
1378
1376
1374
1372
1370
1368
1366
1364
1362
1360
1358
1356
1354
1352
1350
1348
1346
1344
1342
1340
1338
1336
1334
1332
1330
1328
1326
1324
1322
1320
1318
1316
1314
1312
1310
1308
1306
1304
1302
1300
1298
1296
1294
1292
1290
1288
1286
1284
1282
1280
1278
1276
1274
1272
1270
1268
1266
1264
1262
1260
1258
1256
1254
1252
1250
1248
1246
1244
1242
1240
1238
1236
1234
1232
1230
1228
1226
1224
1222
1220
1218
1216
1214
1212
1210
1208
1206
1204
1202
1200
1198
1196
1194
1192
1190
1188
1186
1184
1182
1180
1178
1176
1174
1172
1170
1168
1166
1164
1162
1160
1158
1156
1154
1152
1150
1148
1146
1144
1142
1140
1138
1136
1134
1132
1130
1128
1126
1124
1122
1120
1118
1116
1114
1112
1110
1108
1106
1104
1102
1100
1098
1096
1094
1092
1090
1088
1086
1084
1082
1080
1078
1076
1074
1072
1070
1068
1066
1064
1062
1060
1058
1056
1054
1052
1050
1048
1046
1044
1042
1040
1038
1036
1034
1032
1030
1028
1026
1024
1022
1020
1018
1016
1014
1012
1010
1008
1006
1004
1002
1000
998
996
994
992
990
988
986
984
982
980
978
976
974
972
970
968
966
964
962
960
958
956
954
952
950
948
946
944
942
940
938
936
934
932
930
928
926
924
922
920
918
916
914
912
910
908
906
904
902
900
898
896
894
892
890
888
886
884
882
880
878
876
874
872
870
868
866
864
862
860
858
856
854
852
850
848
846
844
842
840
838
836
834
832
830
828
826
824
822
820
818
816
814
812
810
808
806
804
802
800
798
796
794
792
790
788
786
784
782
780
778
776
774
772
770
768
766
764
762
760
758
756
754
752
750
748
746
744
742
740
738
736
734
732
730
728
726
724
722
720
718
716
714
712
710
708
706
704
702
700
698
696
694
692
690
688
686
684
682
680
678
676
674
672
670
668
666
664
662
660
658
656
654
652
650
648
646
644
642
640
638
636
634
632
630
628
626
624
622
620
618
616
614
612
610
608
606
604
602
600
598
596
594
592
590
588
586
584
582
580
578
576
574
572
570
568
566
564
562
560
558
556
554
552
550
548
546
544
542
540
538
536
534
532
530
528
526
524
522
520
518
516
514
512
510
508
506
504
502
500
498
496
494
492
490
488
486
484
482
480
478
476
474
472
470
468
466
464
462
460
458
456
454
452
450
448
446
444
442
440
438
436
434
432
430
428
426
424
422
420
418
416
414
412
410
408
406
404
402
400
398
396
394
392
390
388
386
384
382
380
378
376
374
372
370
368
366
364
362
360
358
356
354
352
350
348
346
344
342
340
338
336
334
332
330
328
326
324
322
320
318
316
314
312
310
308
306
304
302
300
298
296
294
292
290
288
286
284
282
280
278
276
274
272
270
268
266
264
262
260
258
256
254
252
250
248
246
244
242
240
238
236
234
232
230
228
226
224
222
220
218
216
214
212
210
208
206
204
202
200
198
196
194
192
190
188
186
184
182
180
178
176
174
172
170
168
166
164
162
160
158
156
154
152
150
148
146
144
142
140
138
136
134
132
130
128
126
124
122
120
118
116
114
112
110
108
106
104
102
100
98
96
94
92
90
88
86
84
82
80
78
76
74
72
70
68
66
64
62
60
58
56
54
52
50
48
46
44
42
40
38
36
34
32
30
28
26
24
22
20
18
16
14
12
10
8
6
4
2
0
-2
-4
-6
-8
-10
-12
-14
-16
-18
-20
-22
-24
-26
-28
-30
-32
-34
-36
-38
-40
-42
-44
-46
-48
-50
-52
-54
-56
-58
-60
-62
-64
-66
-68
-70
-72
-74
-76
-78
-80



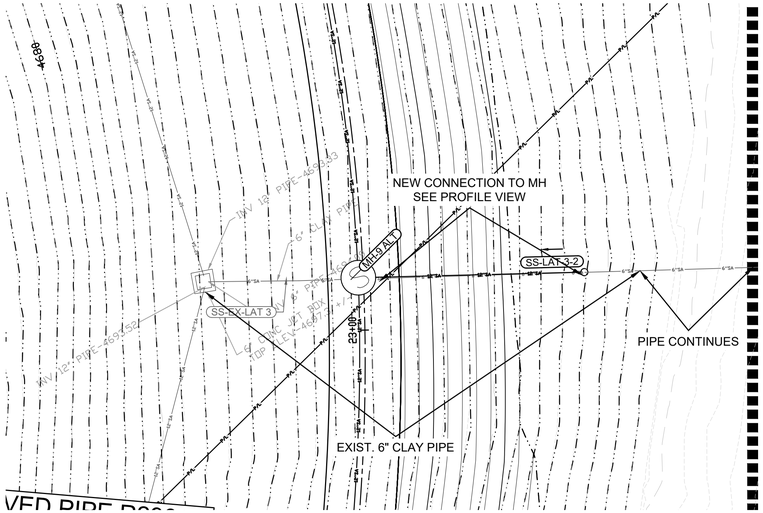

EXIST SEW LAT 3
0+00 TO 0+70

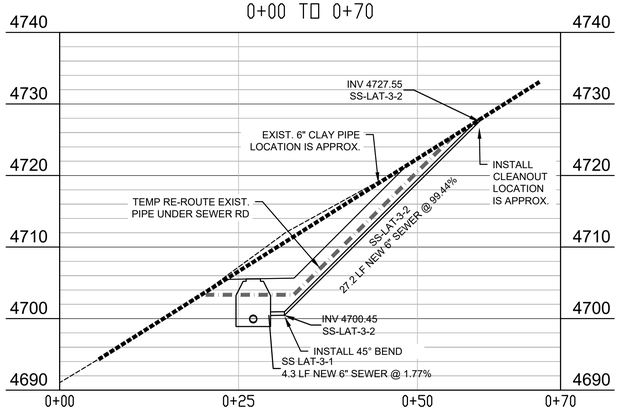

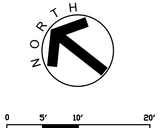

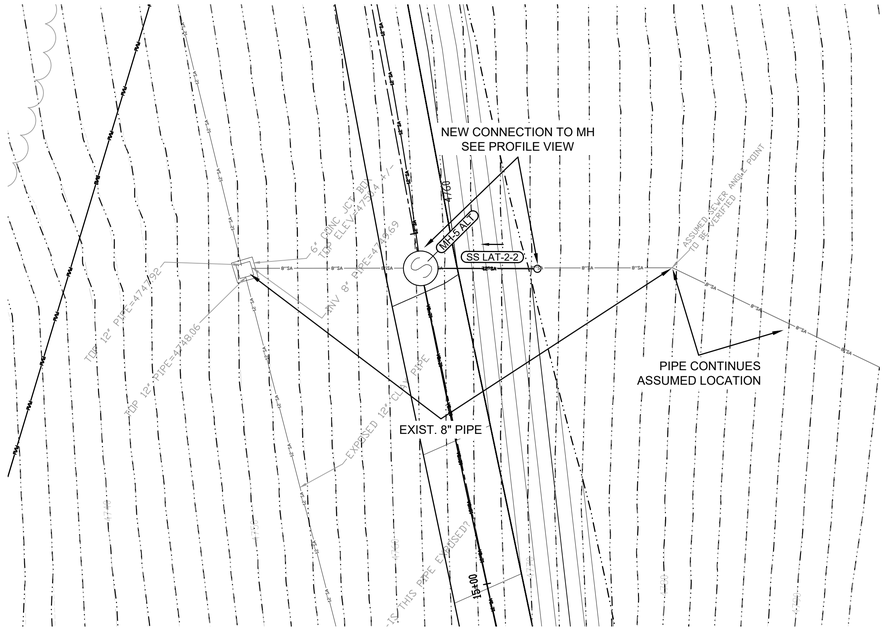

EX SEW LAT 2
0+00 TO 0+75

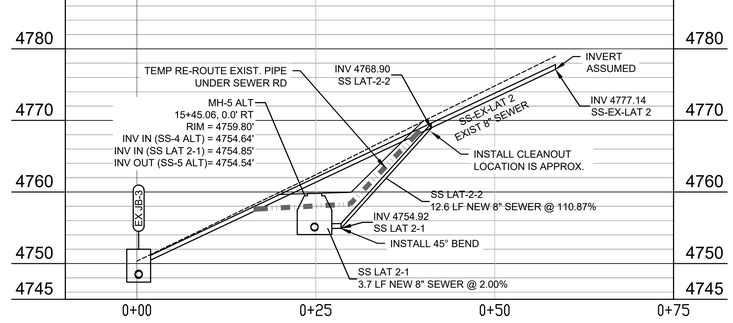

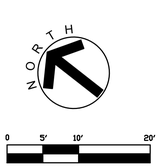

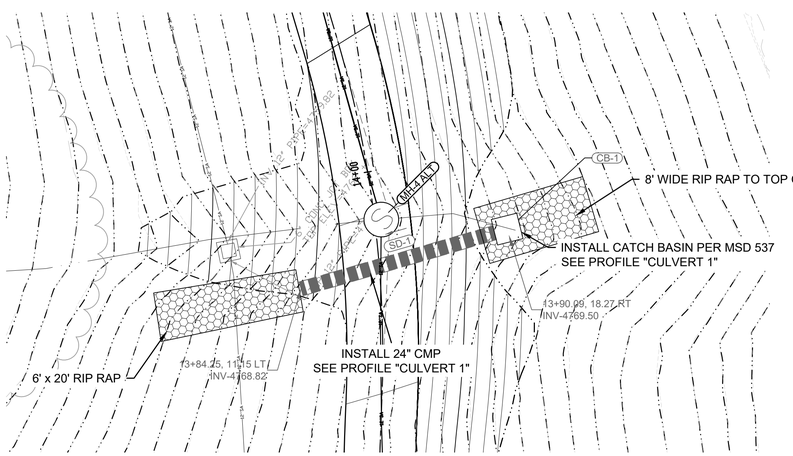

CULVERT 1
0+00 TO 0+75

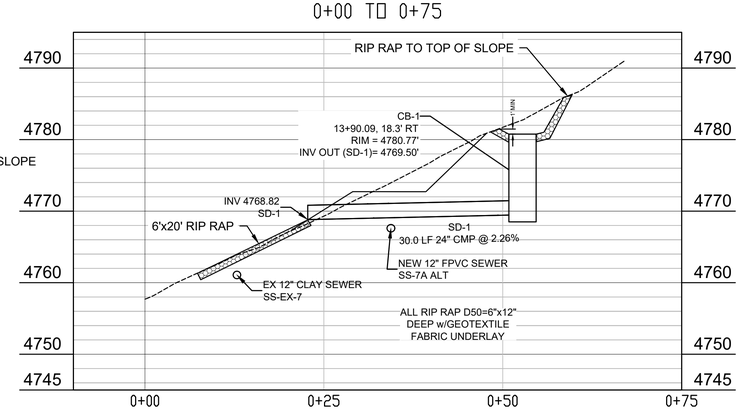

CONSTRUCTION NOTES

1. THE EXISTING SEWER PIPES ARE VERY SHALLOW. EXTREME CAUTION IS REQUIRED TO ENSURE THE PIPES ARE PROTECTED DURING CONSTRUCTION. EXISTING SEWER TO REMAIN OPERATIONAL AT ALL TIMES UNTIL THE NEW SEWER IS ACTIVATED.
2. THE EXISTING LATERAL SEWERS SHALL BE TEMPORARILY RE-ROUTED AS NEEDED DURING CONSTRUCTION UNTIL THE NEW SEWER IS ACTIVATED.
3. WASTE MATERIAL FROM THE SEWER AND ROAD CONSTRUCTION SHALL BE REMOVED FROM PRIVATELY OWNED PROPERTIES.
4. CUT SLOPES STEEPER THAN 2:1 SHOULD BE EVALUATED AND APPROVED BY GEOTECHNICAL ENGINEER.
5. ALL TEMPORARY AND NEW SEWER PIPES AND STRUCTURES SHALL BE INSTALLED PER THE SPECIFICATIONS PROVIDED BY THE SEWER PLANT ENGINEER.
6. NEW EASEMENTS ARE NEEDED FOR BOTH EXISTING AND PROPOSED SEWER ACROSS PRIVATE LAND. TO BE COORDINATED BY THE TOWN.

NO	BY	DATE	REVISIONS	DATE	APP.



PREPARED BY:
DESIGNED BY:
DRAWN BY: NMW
CHECKED BY: KG
SCALE: AS SHOWN
DATE 10/31/25
JOB NO. 19-1101CE

TITLE
ALT SEWER LATERAL PROFILES

JOB
JEROME WWTP
GRADING & UTILITIES PLANS
YAVAPAI COUNTY AZ

PREPARED BY:
SEC Inc.
SOUTHWESTERN ENVIRONMENTAL CONSULTANTS, INC
825 COVE PARKWAY
COTTONWOOD, AZ 86326
928-282-7787

SHEET
C4.5
25 OF 99 SHEETS

JOB NO. 19-1101CE

© 2025, SEC, Inc., All Rights Reserved. This document is protected under the United States Copyright Act. No part may be reproduced in any form or by any means or stored in a database or retrieval system, without the prior written permission of SEC, Inc. These plans/documents have been prepared using technical knowledge that would be applied by other qualified registrants who practice the same profession in the same area and at the same time. Efforts have been made to be as accurate as possible. However, plans/documents could contain unintentional technical inaccuracies, typographical errors or omissions. Users of these plans/documents should understand that it is highly probable that errors and omissions will occur in any plan/document preparation process.

S:\LAND PROJECTS 2004 ENGINEERING\19-1101CE JEROME WWTP\DWG\C3D\PLANS\XBSAN-ALT-19-1101CE.DWG



EXISTING EQUIPMENT AND COMPONENTS

1. BAR SCREEN
2. 2" PVC POTABLE WATERLINE
3. STORAGE TANKS (ABANDONED)
4. PRIMARY SETTLING TANK
5. DOSING TANK A
6. TRICKLING FILTER (TYP.)
7. REED BEDS (TYP.)
8. DOSING TANK B
9. CONSTRUCTED WETLAND CELLS (TYP.)
10. LEVEL ADJUST SUMP (TYP.)
11. CHLORINE CONTACT CHAMBERS

EXISTING SITE PLAN

NORTH

40 20 0 40 80

100% ISSUED FOR BID

NO	BY	DATE	REVISIONS	DATE	APP.

Registered Professional Engineer (Civil) CERTIFICATE NO. 70097 Timothy B. Pierce Signed Arizona U.S.A. Expires 12/31/28

PREPARED BY: PACE
DESIGNED BY: NE
DRAWN BY: DS, WW
CHECKED BY: TP
SCALE: AS NOTED
DATE: NOV 2025
JOB NO. B614

THESE DRAWINGS ARE THE PROPERTY OF P.A.C.E. AND SHALL NOT BE REPRODUCED IN ANY MANNER NOR BE USED FOR CONSTRUCTION UNLESS STAMPED 'ISSUED FOR CONSTRUCTION'.

TITLE
EXISTING SITE PLAN

JOB
TOWN OF JEROME
WASTEWATER
TREATMENT PLANT
YAVAPAI CO. AZ

PREPARED BY:
PACE
Advanced Water Engineering
8723 E. VIA DE VENTURA, SUITE A, SCOTTSDALE, CA 85258
P: (480) 991-3955 | www.pacewater.com
TAYLOR B. PIERCE R.C.E. 70097 DATE

SHEET
M1.0
26 OF 99 SHEETS

JOB NO. B614

W:\B614\Engineering\B614-30sheets\B614- M1.0 EXISTING SITE PLAN.dwg - Tab: SITE PLAN - by neddington on 03/10/26 at 2:04:43 PM



CONSTRUCTION NOTES:

1. INSTALL TEMPORARY 12" BYPASS FOR THE EXISTING SEWER INFLUENT LINE.
2. REMOVE EXISTING BAR SCREEN AND RELOCATE UPSTREAM OF THE EXISTING PRIMARY SETTLING TANK.
3. INSTALL TEMPORARY BAR SCREEN AND 12" SEWER BYPASS LINE TO THE PRIMARY SETTLING TANK.
4. DEMOLISH AND REMOVE THE EXISTING TANK SAND FILTER, TANK CLARIFIER, STORAGE BUILDING, AND STATIC SCREEN.
5. CUT AND CAP EXISTING 2" WATER SERVICE TO THE WWTP.
6. DEMOLISH AND REMOVE THE EXISTING STORAGE SHED.
7. CUT AND CAP PIPE FROM THE PRIMARY SETTLING TANK TO THE EAST REED BED.
8. CUT AND CAP LINE FROM DOSING TANK A TO EAST TRICKLING FILTER.
9. LOCATE, CUT AND CAP LINE FROM SAND FILTER TANK.
10. CUT, CAP AND PROTECT IN PLACE EAST TRICKLING FILTER.
11. CUT AND CAP DRAIN LINE FROM EAST TRICKLING FILTER UPSTREAM OF WEST TRICKLING FILTER LINE TIE-IN LOCATION.
12. REMOVE ALL EXISTING PIPING WITHIN THE EAST REED BED.
13. CUT AND CAP EAST REED BED DRAIN LINE AT THE EXISTING MANHOLE.
14. PROTECT IN PLACE.
15. REMOVE APPROX. 140 LF OF EXISTING FENCE.

NOTES:
1. CONTRACTOR TO PROVIDE A SEQUENCE OF CONSTRUCTION TO ENGINEER FOR REVIEW PRIOR TO CONSTRUCTION. CONTRACTOR SHALL BE RESPONSIBLE FOR ALL MEANS AND METHODS.

DEMOLITION PLAN PH-I

NORTH
40 20 0 40 80

NO	BY	DATE	REVISIONS	DATE	APP.

Registered Professional Engineer (Civil) CERTIFICATE NO. 70097 Taylor B. Pierce Signed 12/31/25 ARIZONA, U.S.A. Expires 12/31/28

PREPARED BY: PACE
DESIGNED BY: NE
DRAWN BY: DS, WW
CHECKED BY: TP
SCALE: AS NOTED
DATE: NOV 2025
JOB NO.: B614

THESE DRAWINGS ARE THE PROPERTY OF P.A.C.E. AND SHALL NOT BE REPRODUCED IN ANY MANNER NOR BE USED FOR CONSTRUCTION UNLESS STAMPED 'ISSUED FOR CONSTRUCTION'.

TITLE: **DEMOLITION PLAN PH-I**

JOB: TOWN OF JEROME
WASTEWATER
TREATMENT PLANT
YAVAPAI CO. AZ

100% ISSUED FOR BID

PREPARED BY: TAYLOR B. PIERCE R.C.E 70097 DATE
PACE
Advanced Water Engineering
8723 E. Via de Commercio, Suite 2-114, Scottsdale, CA 85258
P: (408) 991-3395 | www.pacewater.com

SHEET
M1.1
27 OF 99 SHEETS

JOB NO. B614

W:\B614\Engineering\B614-30\sheets\B614 - M1.1 DEMO PLANS PH-I.dwg - Tab: M1.1 - by reddington on 11/17/25 at 10:25:59 AM



CONSTRUCTION NOTES:

1. REMOVE TEMPORARY BYPASS PIPING FROM THE INFLUENT LINE ONCE FLOW HAS BEEN DIVERTED THROUGH NEW WWTP.
2. DEMOLISH AND REMOVE EXISTING PRIMARY SETTLING TANK. REMOVE ALL ABOVE GRADE PIPING & CAP AND ABANDON IN PLACE ALL BELOW GRADE PIPING.
3. DEMOLISH AND REMOVE EXISTING DOSING TANK A. REMOVE ALL ABOVE GRADE PIPING & CAP AND ABANDON IN PLACE ALL BELOW GRADE PIPING.
4. REMOVE ALL ABOVE GRADE PIPING & CAP AND ABANDON IN PLACE ALL BELOW GRADE PIPING. ABANDON IN PLACE WEST TRICKLING FILTER.
5. CAP AND ABANDON IN PLACE EXISTING SEPTIC TANK. REMOVE ALL ABOVE GRADE PIPING & CAP AND ABANDON IN PLACE ALL BELOW GRADE PIPING.
6. ABANDON IN PLACE EXISTING WEST REED BED. REMOVE ALL ABOVE GRADE PIPING & CAP AND ABANDON IN PLACE ALL BELOW GRADE PIPING.
7. CAP AND ABANDON IN PLACE EXISTING MANHOLE. CUT AND CAP ALL PIPING BELOW GRADE AND ABANDON IN PLACE.
8. CAP AND ABANDON IN PLACE EXISTING DOSING TANK B. REMOVE ALL ABOVE GRADE PIPING & CAP AND ABANDON IN PLACE ALL BELOW GRADE PIPING.
9. ABANDON IN PLACE EXISTING WEST WETLAND CELL. REMOVE ALL ABOVE GRADE PIPING & CAP AND ABANDON IN PLACE ALL BELOW GRADE PIPING. REUSE TRAFFIC BARRIER FOR NEW OVERFLOW BASIN.
10. REMOVE ALL PIPING WITHIN THE THREE EAST WETLAND BASINS & CUT, CAP, AND ABANDON IN PLACE ALL PIPING OUTSIDE THE BASINS.
11. CAP AND ABANDON IN PLACE EAST LEVEL ADJUST SUMPS. CUT, CAP AND ABANDON IN PLACE ALL BELOW GRADE PIPING.
12. CAP AND ABANDON IN PLACE WEST LEVEL ADJUST SUMP. CUT, CAP AND ABANDON IN PLACE ALL BELOW GRADE PIPING.
13. CAP AND ABANDON IN PLACE EXISTING CHLORINE CONTACT CHAMBER. CUT, CAP AND ABANDON IN PLACE ALL BELOW GRADE PIPING.

DEMOLITION PLAN PH-II

NORTH

40 20 0 40 80

100% ISSUED FOR BID

PREPARED BY: TAYLOR B. PIERCE R.C.E 70097 DATE

PACE
Advanced Water Engineering
8723 E. VIA DE COMMERCIO, 1ST FLOOR | SCOTTSDALE, CA 85258
P. (480) 991-3595 | www.paceaztr.com

TITLE: DEMOLITION PLAN PH-II

JOB: TOWN OF JEROME WASTEWATER TREATMENT PLANT — YAVAPAI CO. AZ

NO	BY	DATE	REVISIONS	DATE	APP.

Registered Professional Engineer (Civil) CERTIFICATE NO. 70097 TAYLOR B. PIERCE Signed ARIZONA U.S.A. Expires 12/31/28

PREPARED BY: PACE
DESIGNED BY: NE
DRAWN BY: DS, WW
CHECKED BY: TP
SCALE: AS NOTED
DATE: NOV 2025
JOB NO.: B614

SHEET M1.2
28 OF 99 SHEETS

JOB NO. B614

THESE DRAWINGS ARE THE PROPERTY OF P.A.C.E. AND SHALL NOT BE REPRODUCED IN ANY MANNER NOR BE USED FOR CONSTRUCTION UNLESS STAMPED 'ISSUED FOR CONSTRUCTION'.

W:\B614\Engineering\B614-30sheets\B614 - M1.2 DEMO PLANS PHII.dwg - Tab: M1.2 - by reddington on 03/10/26 at 12:57:22 PM

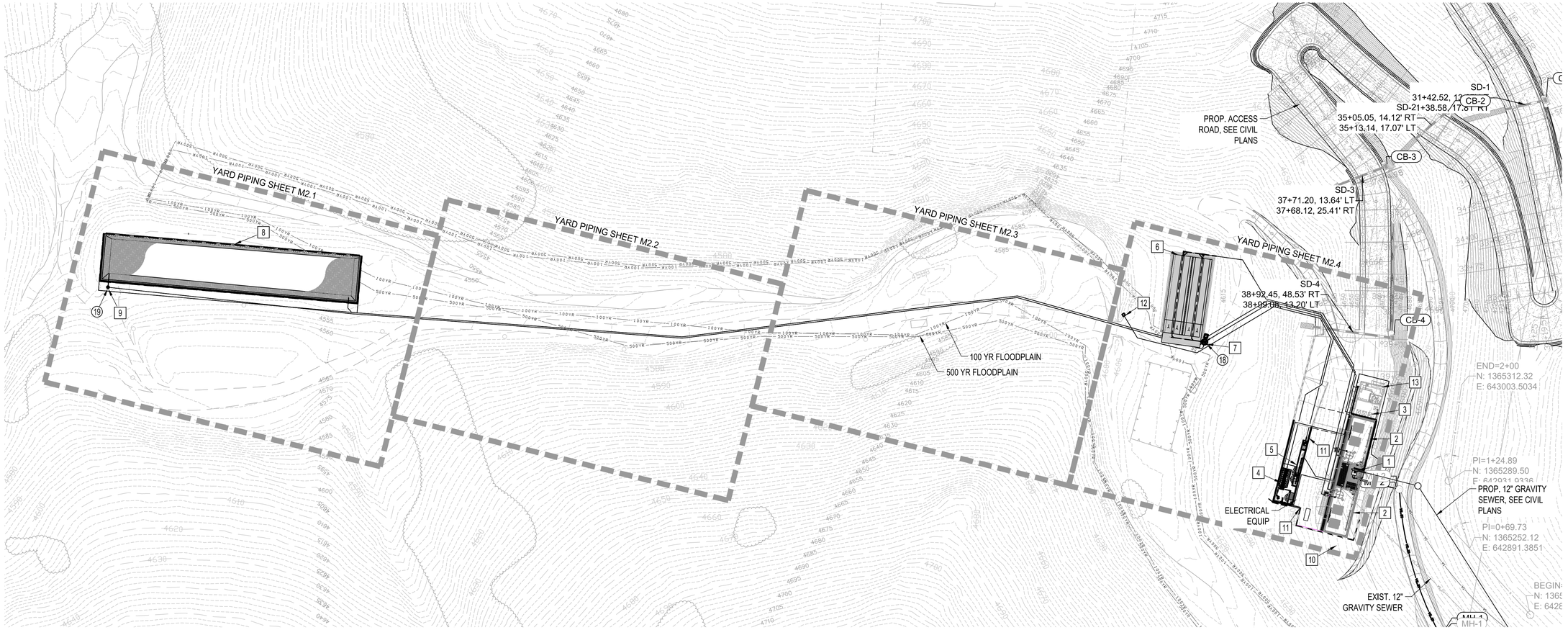

CONSTRUCTION NOTES:

1. HEADWORKS PER SHEET M3.0.
2. SEQUENCING BATCH REACTOR PER SHEET M3.0.
3. BLOWER ROOM PER SHEET M7.0.
4. DEWATERING PAD PER SHEET M5.3.
5. CHLORINE CONTACT CHANNEL PER SHEET M4.0.
6. SLUDGE DRYING BED PER SHEET M5.0.
7. DRYING BED LIFT STATION PER SHEET M5.2.
8. EMERGENCY OVERFLOW BASIN PER SHEET M6.0.
9. PACKAGED OVERFLOW LIFT STATION PER DETAIL A SHEET M8.2.
10. REPLACE 140± LF OF PERIMETER FENCING TO MATCH.
11. RETAINING WALL PER STRUCTURAL SHEET S2.10.
12. PRECAST CONCRETE EFFLUENT SAMPLE BOX PER SHEET M5.0.
13. OPERATIONS ROOM PER SHEET M7.0.

PROPOSED SITE PLAN

NORTH

40 20 0 40 80

100% ISSUED FOR BID

CALL TWO WORKING DAYS BEFORE YOU DIG
602-263-1100
1-800-STAKE-IT
(OUTSIDE MARICOPA COUNTY)

NO	BY	DATE	REVISIONS	DATE	APP.

Registered Professional Engineer (Civil) CERTIFICATE NO. 70097 Taylor B. Pierce Signed 12/31/25 ARIZONA, U.S.A. Expires 12/31/28

THESE DRAWINGS ARE THE PROPERTY OF P.A.C.E. AND SHALL NOT BE REPRODUCED IN ANY MANNER NOR BE USED FOR CONSTRUCTION UNLESS STAMPED 'ISSUED FOR CONSTRUCTION'.

PREPARED BY: PACE
DESIGNED BY: NE
DRAWN BY: DS, WW
CHECKED BY: TP
SCALE: AS NOTED
DATE: NOV 2025
JOB NO.: B614

TITLE: PROPOSED SITE PLAN

JOB: TOWN OF JEROME WASTEWATER TREATMENT PLANT — YAVAPAI CO. AZ

PREPARED BY: TAYLOR B. PIERCE R.C.E. 70097 DATE

PACE
Advanced Water Engineering
CONNECTED WITH A VISION
8123 E. VIA DE COMERCIO, SUITE A, SCOTTSDALE, CA 85258
P: (480) 991-3595 | W: www.pacewater.com

SHEET M2.0
29 OF 99 SHEETS

JOB NO. B614

W:\B614\Engineering\B614-3\Sheets\B614 - M2.0 SITE PLANS.dwg - Tab: SITE PLAN - by redlington on 03/10/26 at 2:18:11 PM

CONSTRUCTION NOTES:

1. INSTALL 2" SCH. 80 PVC PIPE.
2. INSTALL 4" C900 PVC PIPE.
3. INSTALL 4" - 45° D.I. BEND W/ MJ CONNECTIONS W/ THRUST BLOCKS PER DETAIL C SHEET M8.0.
4. REPLACE 10± LF OF PERIMETER FENCING TO MATCH.
5. INSTALL 2" PVC COUPLING.
6. TRENCH AND BACKFILL PER DETAIL D, SHEET M8.1.
7. CONTRACTOR TO PROVIDE FITTINGS AS REQUIRED TO CONNECT TO LIFT STATION DISCHARGE PIPING

EARTHWORK ESTIMATE (UNADJUSTED)

CUT	1,465	Cu. Yd.
FILL	0	Cu. Yd.
NET	1,465	Cu. Yd. <CUT>

CONTRACTOR SHALL VERIFY EARTHWORK QUANTITIES

POINT TABLE			
PNT. #	NORTHING	EASTING	DESCRIPTION
1	1366308.34	642657.44	OF BSN BTM CNR
2	1366131.64	642724.07	OF BSN BTM CNR
3	1366299.09	642632.53	OF BSN BTM CNR
4	1366121.64	642697.12	OF BSN BTM CNR
5	1366295.09	642622.30	LS CTR

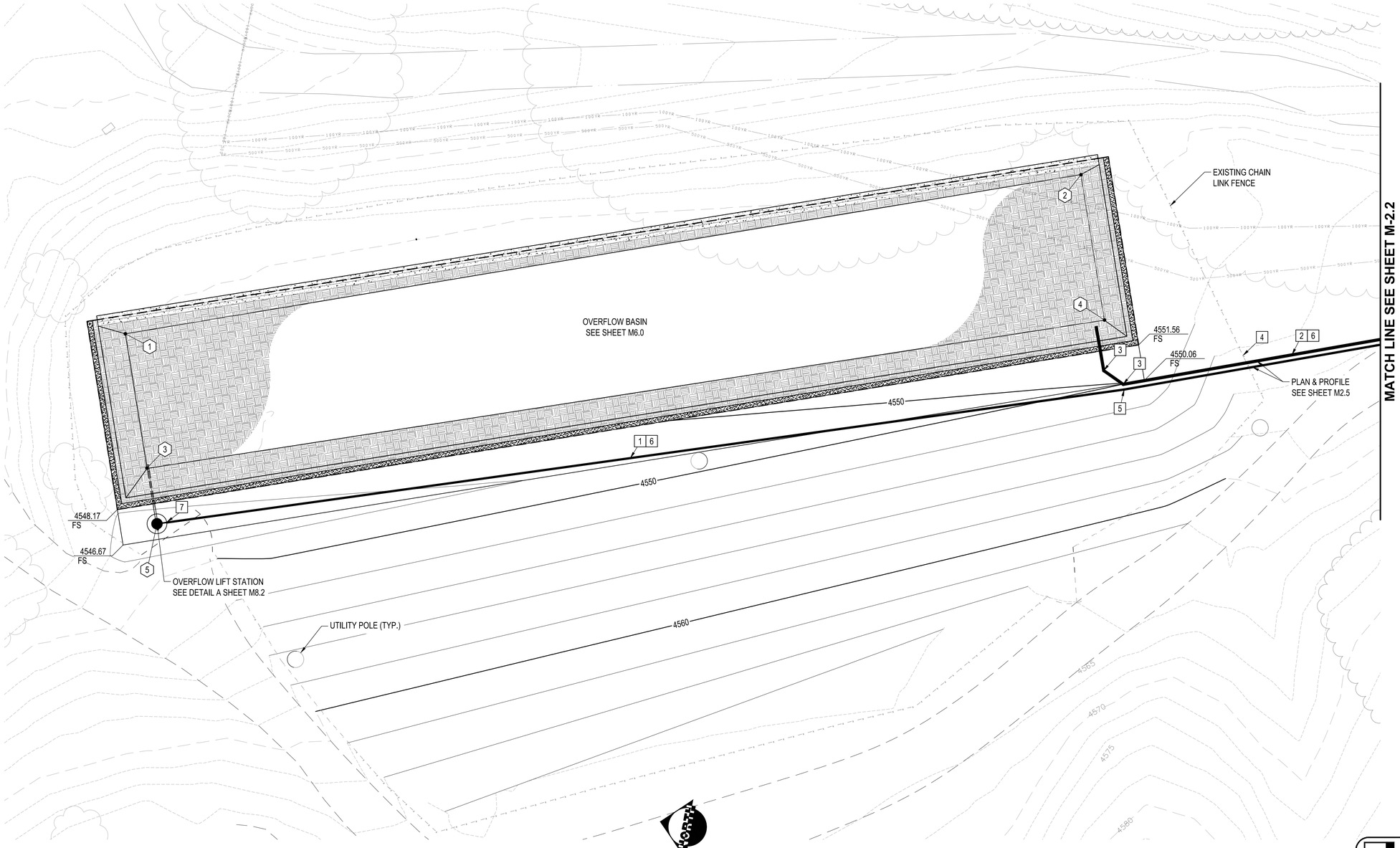

YARD PIPING & GRADING PLAN
SCALE: 1" = 10'

CALL TWO WORKING DAYS BEFORE YOU DIG
602-263-1100
1-800-STAKE-IT
(OUTSIDE MARICOPA COUNTY)

100% ISSUED FOR BID

NO	BY	DATE	REVISIONS	DATE	APP.

Registered Professional Engineer (Civil) CERTIFICATE NO. 70097 TAYLOR B. PIERCE Signed ARIZONA, U.S.A. Expires 12/31/28

THESE DRAWINGS ARE THE PROPERTY OF P.A.C.E. AND SHALL NOT BE REPRODUCED IN ANY MANNER NOR BE USED FOR CONSTRUCTION UNLESS STAMPED 'ISSUED FOR CONSTRUCTION'.

PREPARED BY: PACE
DESIGNED BY: NE
DRAWN BY: DS, WW
CHECKED BY: TP
SCALE: AS NOTED
DATE: NOV 2025
JOB NO.: B614

TITLE: YARD PIPING & GRADING PLAN

JOB: TOWN OF JEROME WASTEWATER TREATMENT PLANT
YAVAPAI CO. AZ

PREPARED BY: TAYLOR B. PIERCE R.C.E 70097 DATE
PACE
Advanced Water Engineering
8723 E. Via de Ventura Suite 110 SCOTTSDALE, CA 85258
P: (480) 991-3595 | www.pacewater.com

SHEET M2.1
30 OF 99 SHEETS

JOB NO. B614

W:\B614 Engineering\B614-30\sheets\B614 - M2.1 YARD PIPING - OLD VERSION RESTORED.dwg - Tab: M2.1 - by reddington on 03/10/26 at 2:03:53 PM

CONSTRUCTION NOTES:

1. INSTALL 2" SCH. 80 PVC PIPE.
2. INSTALL 2" - 11.25° SCH. 80 PVC BEND.
3. INSTALL 4" C900 PVC PIPE.
4. INSTALL 4" - 11.25° D.I. BEND W/ MJ CONNECTIONS W/ THRUST BLOCKS PER DETAIL C SHEET M8.0.
5. TRENCH AND BACKFILL PER DETAIL D, SHEET M8.1.

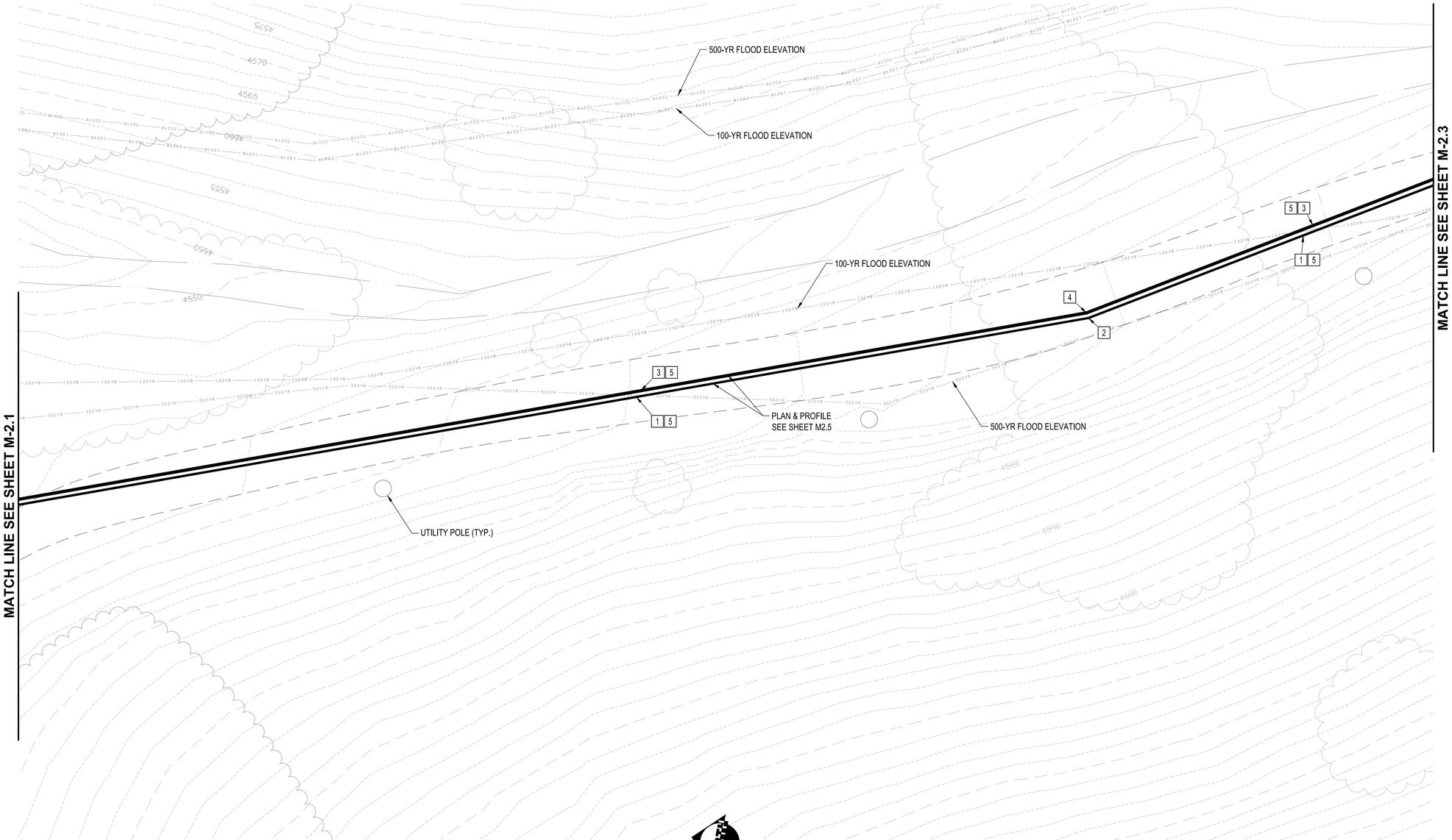

YARD PIPING PLAN
SCALE: 1" = 10'

NORTH
10 5 0 10 20

CALL TWO WORKING DAYS BEFORE YOU DIG
602-263-1100
1-800-STAKE-IT
(OUTSIDE MARICOPA COUNTY)

100% ISSUED FOR BID

NO	BY	DATE	REVISIONS	DATE	APP.

Registered Professional Engineer (Civil)
CERTIFICATE NO. 70097
TAYLOR B. PIERCE
Signed
ARIZONA, U.S.A.
Expires 12/31/28

PREPARED BY: PACE
DESIGNED BY: NE
DRAWN BY: DS, WW
CHECKED BY: TP
SCALE: AS NOTED
DATE: NOV 2025
JOB NO. B614

THESE DRAWINGS ARE THE PROPERTY OF P.A.C.E. AND SHALL NOT BE REPRODUCED IN ANY MANNER NOR BE USED FOR CONSTRUCTION UNLESS STAMPED 'ISSUED FOR CONSTRUCTION'.

TITLE
YARD PIPING PLAN

JOB
TOWN OF JEROME
WASTEWATER
TREATMENT PLANT
YAVAPAI CO. AZ

PREPARED BY:
PACE
Advanced Water Engineering
8723 E. Via de Commercio, Suite 100 | SCOTTSDALE, CA 85258
P: (480) 991-3595 | www.pacewater.com
TAYLOR B. PIERCE R.C.E 70097 DATE

SHEET
M2.2
31 OF 99 SHEETS

JOB NO. B614

W:\B614\Engineering\B614-30\sheets\B614 - M2.1 YARD PIPING - OLD VERSION RESTORED.dwg - Tab: M2.2 - by reddington on 03/10/26 at 2:05:53 PM

CONSTRUCTION NOTES:

1. INSTALL 2" SCH. 80 PVC PIPE.
2. INSTALL 2" - 22.5° SCH. 80 PVC BEND.
3. INSTALL 4" D.I. PIPE.
4. INSTALL 4" C900 PVC PIPE.
5. INSTALL 4" - 22.5° D.I. BEND W/ MJ FITTINGS W/ THRUST BLOCKS PER DETAIL C SHEET M8.0.
6. INSTALL CLEANOUT PER DETAIL I SHEET M8.3.
7. INSTALL PVC TO DIP TRANSITION COUPLING, ROMAC OR EQUAL.
8. TRENCH AND BACKFILL PER DETAIL D, SHEET M8.1.

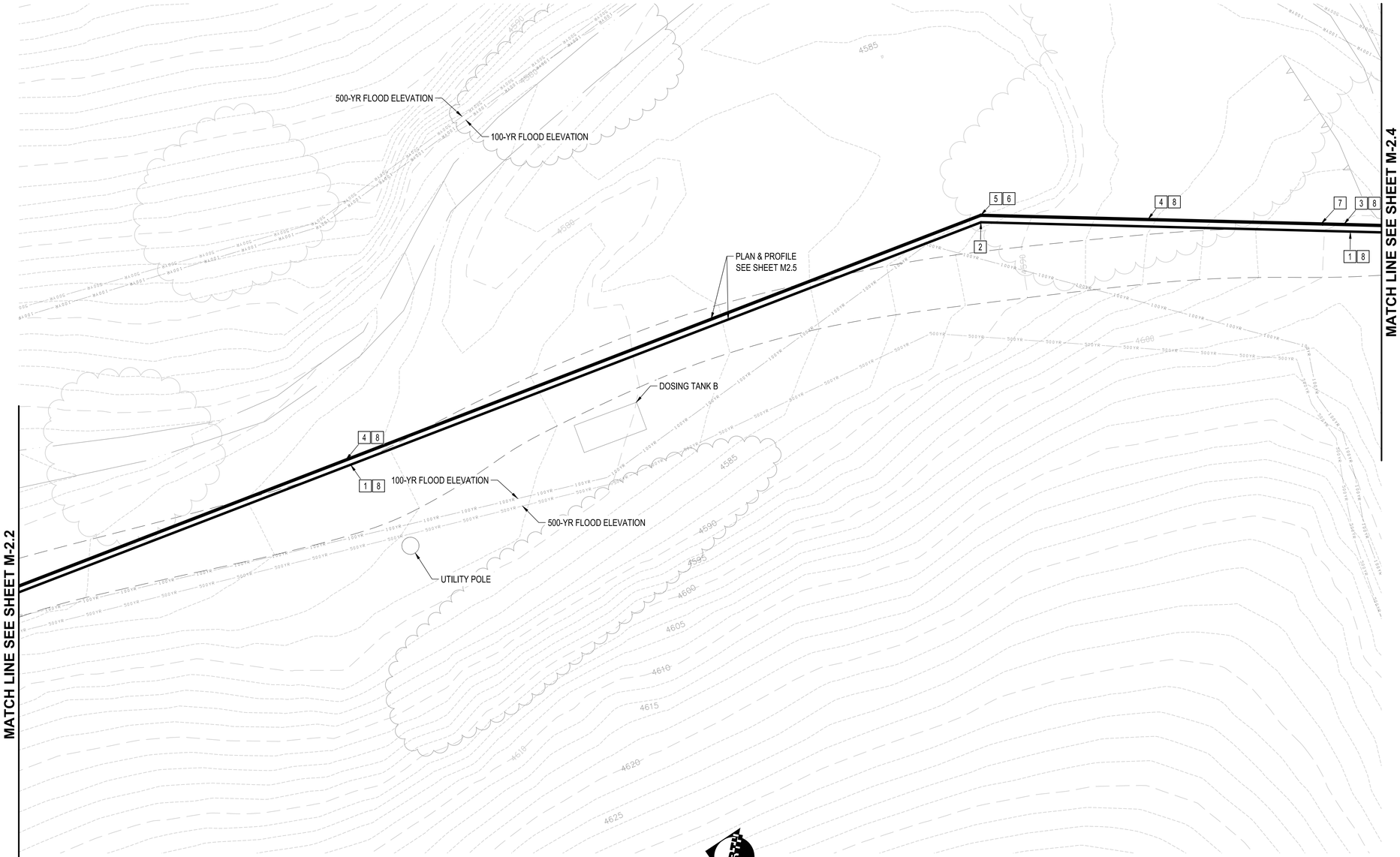

YARD PIPING PLAN
SCALE: 1" = 10'

NORTH
10 5 0 10 20

NO	BY	DATE	REVISIONS	DATE	APP.

Registered Professional Engineer (Civil) CERTIFICATE NO. 70097 Timothy B. Pierce Signed ARIZONA, U.S.A. Expires 12/31/28

PREPARED BY: PACE
DESIGNED BY: NE
DRAWN BY: DS, WW
CHECKED BY: TP
SCALE: AS NOTED
DATE: NOV 2025
JOB NO.: B614

TITLE: YARD PIPING

JOB: TOWN OF JEROME WASTEWATER TREATMENT PLANT
YAVAPAI CO. AZ

100% ISSUED FOR BID

PREPARED BY:
PACE
Advanced Water Engineering
8723 E. VIA de COMMERCIO, BLDG. 3 M, SCOTTSDALE, CA 85258
P: (480) 991-3595 | www.pacewater.com
TAYLOR B. PIERCE R.C.E. 70097 DATE

SHEET M2.3
32 OF 99 SHEETS

JOB NO. B614

THESE DRAWINGS ARE THE PROPERTY OF P.A.C.E. AND SHALL NOT BE REPRODUCED IN ANY MANNER NOR BE USED FOR CONSTRUCTION UNLESS STAMPED 'ISSUED FOR CONSTRUCTION'.

W:\B614\Engineering\B614-3\Sheets\B614 - M2.1 YARD PIPING - OLD VERSION RESTORED.dwg - Tab: M2.3 - by neddington on 03/10/26 at 2:03:53 PM

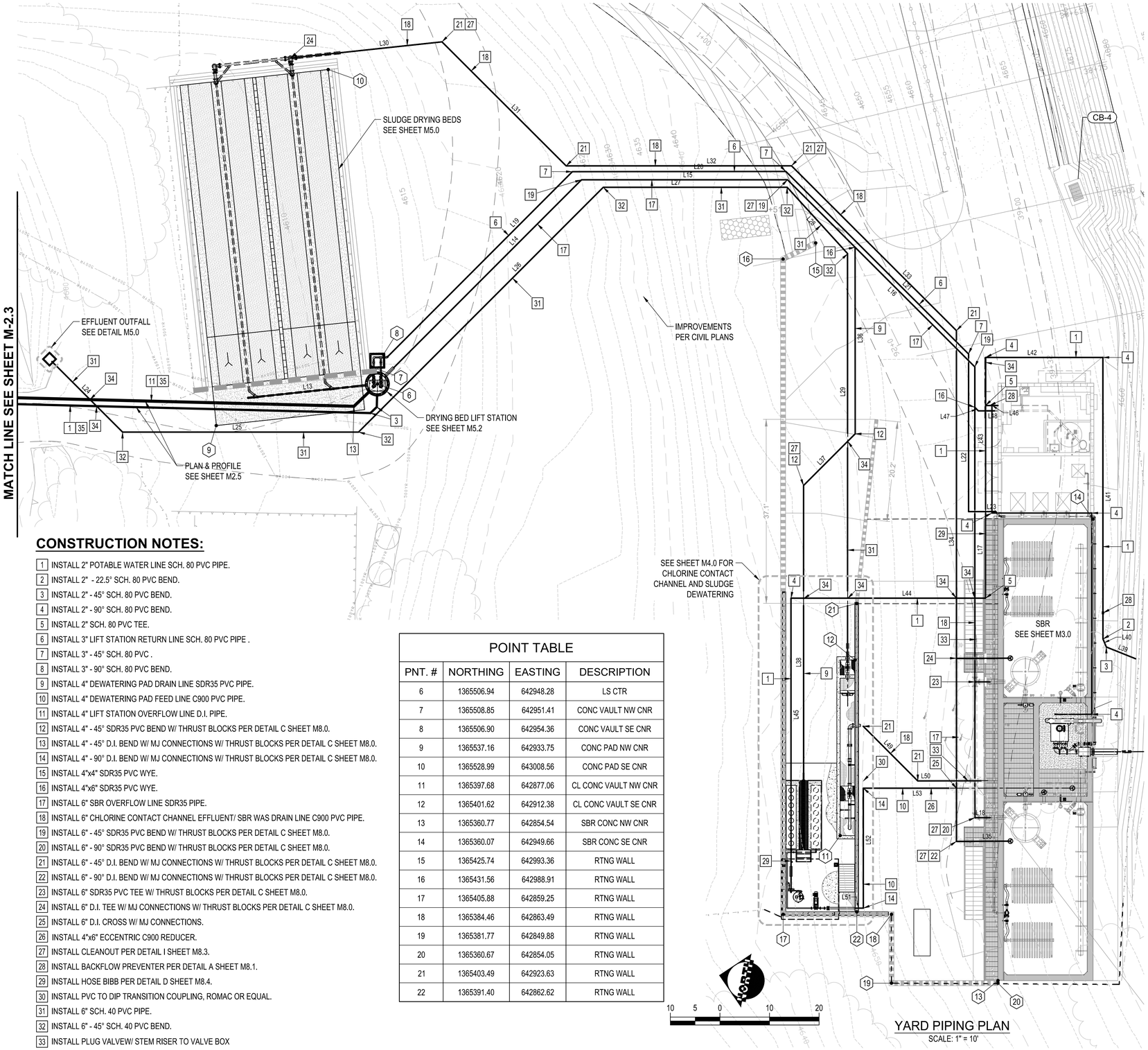

CONSTRUCTION NOTES:

1. INSTALL 2" POTABLE WATER LINE SCH. 80 PVC PIPE.
2. INSTALL 2" - 22.5° SCH. 80 PVC BEND.
3. INSTALL 2" - 45° SCH. 80 PVC BEND.
4. INSTALL 2" - 90° SCH. 80 PVC BEND.
5. INSTALL 2" SCH. 80 PVC TEE.
6. INSTALL 3" LIFT STATION RETURN LINE SCH. 80 PVC PIPE .
7. INSTALL 3" - 45° SCH. 80 PVC .
8. INSTALL 3" - 90° SCH. 80 PVC BEND.
9. INSTALL 4" DEWATERING PAD DRAIN LINE SDR35 PVC PIPE.
10. INSTALL 4" DEWATERING PAD FEED LINE C900 PVC PIPE.
11. INSTALL 4" LIFT STATION OVERFLOW LINE D.I. PIPE.
12. INSTALL 4" - 45° SDR35 PVC BEND W/ THRUST BLOCKS PER DETAIL C SHEET M8.0.
13. INSTALL 4" - 45° D.I. BEND W/ MJ CONNECTIONS W/ THRUST BLOCKS PER DETAIL C SHEET M8.0.
14. INSTALL 4" - 90° D.I. BEND W/ MJ CONNECTIONS W/ THRUST BLOCKS PER DETAIL C SHEET M8.0.
15. INSTALL 4"x4" SDR35 PVC WYE.
16. INSTALL 4"x6" SDR35 PVC WYE.
17. INSTALL 6" SBR OVERFLOW LINE SDR35 PIPE.
18. INSTALL 6" CHLORINE CONTACT CHANNEL EFFLUENT/ SBR WAS DRAIN LINE C900 PVC PIPE.
19. INSTALL 6" - 45° SDR35 PVC BEND W/ THRUST BLOCKS PER DETAIL C SHEET M8.0.
20. INSTALL 6" - 90° SDR35 PVC BEND W/ THRUST BLOCKS PER DETAIL C SHEET M8.0.
21. INSTALL 6" - 45° D.I. BEND W/ MJ CONNECTIONS W/ THRUST BLOCKS PER DETAIL C SHEET M8.0.
22. INSTALL 6" - 90° D.I. BEND W/ MJ CONNECTIONS W/ THRUST BLOCKS PER DETAIL C SHEET M8.0.
23. INSTALL 6" SDR35 PVC TEE W/ THRUST BLOCKS PER DETAIL C SHEET M8.0.
24. INSTALL 6" D.I. TEE W/ MJ CONNECTIONS W/ THRUST BLOCKS PER DETAIL C SHEET M8.0.
25. INSTALL 6" D.I. CROSS W/ MJ CONNECTIONS.
26. INSTALL 4"x6" ECCENTRIC C900 REDUCER.
27. INSTALL CLEANOUT PER DETAIL I SHEET M8.3.
28. INSTALL BACKFLOW PREVENTER PER DETAIL A SHEET M8.1.
29. INSTALL HOSE BIBB PER DETAIL D SHEET M8.4.
30. INSTALL PVC TO DIP TRANSITION COUPLING, ROMAC OR EQUAL.
31. INSTALL 6" SCH. 40 PVC PIPE.
32. INSTALL 6" - 45° SCH. 40 PVC BEND.
33. INSTALL PLUG VALVEW/ STEM RISER TO VALVE BOX
34. POTABLE WATER & SEWER SEPERATION PER DETAIL F SHEET M8.3
35. TRENCH AND BACKFILL PER DETAIL D, SHEET M8.1.

POINT TABLE

PNT. #	NORTHING	EASTING	DESCRIPTION
6	1365506.94	642948.28	LS CTR
7	1365508.85	642951.41	CONC VAULT NW CNR
8	1365506.90	642954.36	CONC VAULT SE CNR
9	1365537.16	642933.75	CONC PAD NW CNR
10	1365528.99	643008.56	CONC PAD SE CNR
11	1365397.68	642877.06	CL CONC VAULT NW CNR
12	1365401.62	642912.38	CL CONC VAULT SE CNR
13	1365360.77	642854.54	SBR CONC NW CNR
14	1365360.07	642949.66	SBR CONC SE CNR
15	1365425.74	642993.36	RTNG WALL
16	1365431.56	642988.91	RTNG WALL
17	1365405.88	642859.25	RTNG WALL
18	1365384.46	642863.49	RTNG WALL
19	1365381.77	642849.88	RTNG WALL
20	1365360.67	642854.05	RTNG WALL
21	1365403.49	642923.63	RTNG WALL
22	1365391.40	642862.62	RTNG WALL

LINE DATA

LINE #	DISTANCE	BEARING	START POINT	END POINT
L13	22.48'	S17°18'33"E	N 1365530.33, E 642940.99	N 1365508.86, E 642947.68
L14	56.23'	S56°12'23"E	N 1365505.83, E 642949.94	N 1365474.55, E 642996.68
L15	41.55'	S11°12'16"E	N 1365474.55, E 642996.68	N 1365433.79, E 643004.75
L16	53.40'	S33°46'31"W	N 1365433.79, E 643004.75	N 1365389.40, E 642975.07
L17	90.91'	S78°47'08"W	N 1365389.40, E 642975.07	N 1365371.72, E 642885.90
L18	3.06'	S11°12'16"E	N 1365371.72, E 642885.90	N 1365368.72, E 642886.49
L19	52.66'	S56°14'49"E	N 1365505.95, E 642954.14	N 1365476.69, E 642997.93
L20	43.07'	S11°14'49"E	N 1365476.69, E 642997.93	N 1365434.44, E 643006.33
L21	52.08'	S33°46'38"W	N 1365434.44, E 643006.33	N 1365391.15, E 642977.37
L22	31.78'	S78°47'08"W	N 1365391.15, E 642977.37	N 1365384.97, E 642946.20
L23	5.63'	S11°12'52"E	N 1365384.97, E 642946.20	N 1365379.45, E 642947.29
L24	19.82'	S33°47'52"W	N 1365571.96, E 642939.80	N 1365555.49, E 642928.78
L25	47.61'	S11°12'09"E	N 1365555.49, E 642928.78	N 1365508.79, E 642938.03
L26	69.82'	S56°12'21"E	N 1365508.79, E 642938.03	N 1365469.95, E 642996.05
L27	37.08'	S11°11'56"E	N 1365469.95, E 642996.05	N 1365433.58, E 643003.25
L28	18.14'	S36°24'57"W	N 1365433.58, E 643003.25	N 1365418.98, E 642992.48
L29	91.27'	S78°48'35"W	N 1365418.98, E 642992.48	N 1365401.27, E 642902.95
L30	30.72'	S17°17'44"E	N 1365536.89, E 643009.37	N 1365507.56, E 643018.50
L31	35.41'	S33°46'20"W	N 1365507.56, E 643018.50	N 1365478.13, E 642998.82
L32	45.45'	S11°13'40"E	N 1365478.13, E 642998.82	N 1365433.55, E 643007.67
L33	47.02'	S33°47'44"W	N 1365433.55, E 643007.67	N 1365394.47, E 642981.52
L34	103.00'	S78°47'25"W	N 1365394.47, E 642981.52	N 1365374.45, E 642880.48
L35	10.88'	S11°24'18"E	N 1365374.45, E 642880.48	N 1365363.79, E 642882.63
L36	37.61'	N78°47'08"E	N 1365410.46, E 642957.14	N 1365417.77, E 642994.04
L37	14.74'	S56°12'52"E	N 1365418.65, E 642944.90	N 1365410.46, E 642957.14
L38	59.50'	N78°47'08"E	N 1365407.08, E 642886.53	N 1365418.65, E 642944.90
L39	6.37'	S10°40'27"W	N 1365352.41, E 642924.80	N 1365346.15, E 642923.62
L40	1.74'	S55°40'27"W	N 1365353.39, E 642926.23	N 1365352.41, E 642924.80
L41	56.80'	S78°47'44"W	N 1365364.43, E 642981.96	N 1365353.39, E 642926.23
L42	23.67'	S11°12'16"E	N 1365387.65, E 642977.36	N 1365364.43, E 642981.96
L43	48.55'	N78°47'44"E	N 1365378.21, E 642929.73	N 1365387.65, E 642977.36
L44	39.25'	S11°12'16"E	N 1365416.71, E 642922.10	N 1365378.21, E 642929.73
L45	59.28'	N78°47'44"E	N 1365405.19, E 642863.95	N 1365416.71, E 642922.10
L46	2.50'	N11°12'16"W	N 1365383.31, E 642968.33	N 1365385.76, E 642967.84
L47	1.00'	N33°47'44"E	N 1365386.98, E 642966.52	N 1365387.82, E 642967.07
L48	3.25'	N11°11'39"W	N 1365383.80, E 642967.15	N 1365386.98, E 642966.52
L49	15.57'	S33°47'44"W	N 1365397.42, E 642899.59	N 1365384.48, E 642890.93
L50	14.13'	S11°20'19"E	N 1365384.48, E 642890.93	N 1365370.63, E 642893.71
L51	1.67'	S11°12'52"E	N 1365391.90, E 642863.29	N 1365390.26, E 642863.62
L52	24.20'	N78°47'08"E	N 1365390.26, E 642863.62	N 1365394.97, E 642887.36
L53	42.17'	S11°12'24"E	N 1365394.97, E 642887.36	N 1365353.60, E 642895.55

NO	BY	DATE	REVISIONS	DATE	APP.

Registered Professional Engineer (Civil)
CERTIFICATE NO.
Timothy R. Pace
Signed
ARIZONA, U.S.A.
Expires 12/31/28

THESE DRAWINGS ARE THE PROPERTY OF P.A.C.E. AND SHALL NOT BE REPRODUCED IN ANY MANNER NOR BE USED FOR CONSTRUCTION UNLESS STAMPED 'ISSUED FOR CONSTRUCTION'.

PREPARED BY: PACE
DESIGNED BY: NE
DRAWN BY: DS, WW
CHECKED BY: TP
SCALE: AS NOTED
DATE: NOV 2025
JOB NO.: B614

TITLE: YARD PIPING

JOB: TOWN OF JEROME WASTEWATER TREATMENT PLANT — YAVAPAI CO. AZ

100% ISSUED FOR BID

PREPARED BY: TAYLOR B. PIERCE

PACE
Advanced Water Engineering
ARIZONA | CALIFORNIA | NEVADA | UTAH
8723 E. Via de Commercio, Suite 104, Scottsdale, AZ 85258
P: (480) 991-3595 | www.pacewater.com
R.C.E 70097

DATE

CALL TWO WORKING DAYS BEFORE YOU DIG
602-263-1100
1-800-STAKE-IT
(OUTSIDE MARICOPA COUNTY)

SHEET M2.4
33 OF 99 SHEETS

JOB NO. B614

W:\B614-Engineering\B614-3\sheets\B614 - M2.1 YARD PIPING - OLD VERSION RESTORED.dwg - Tab: M2.4 - by reddington on 03/10/26 at 2:03:53 PM

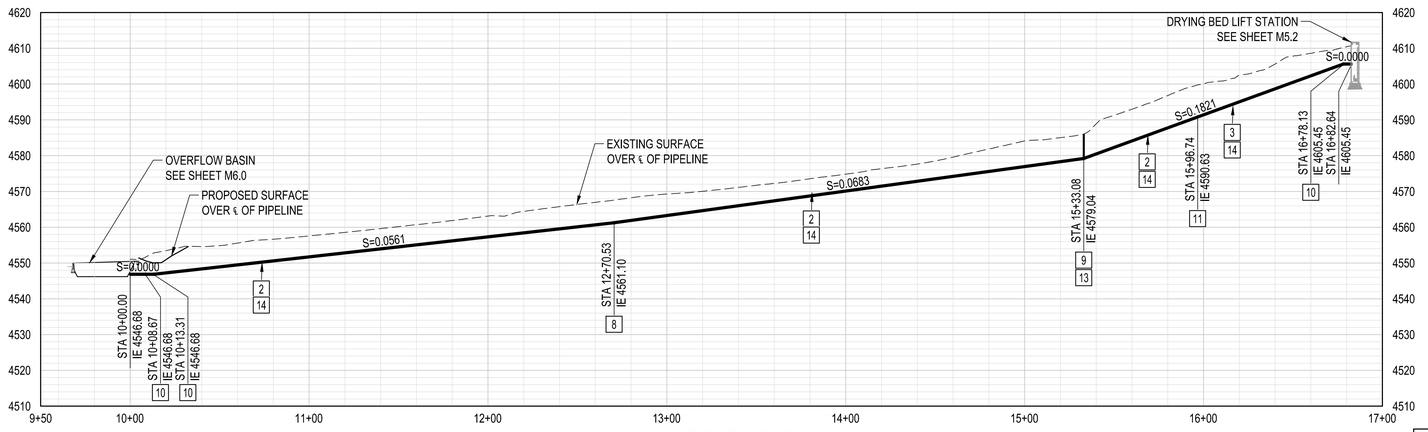

PROFILE L7-L12

SCALE: HORZ: 1" = 40'
VERT: 1" = 20'

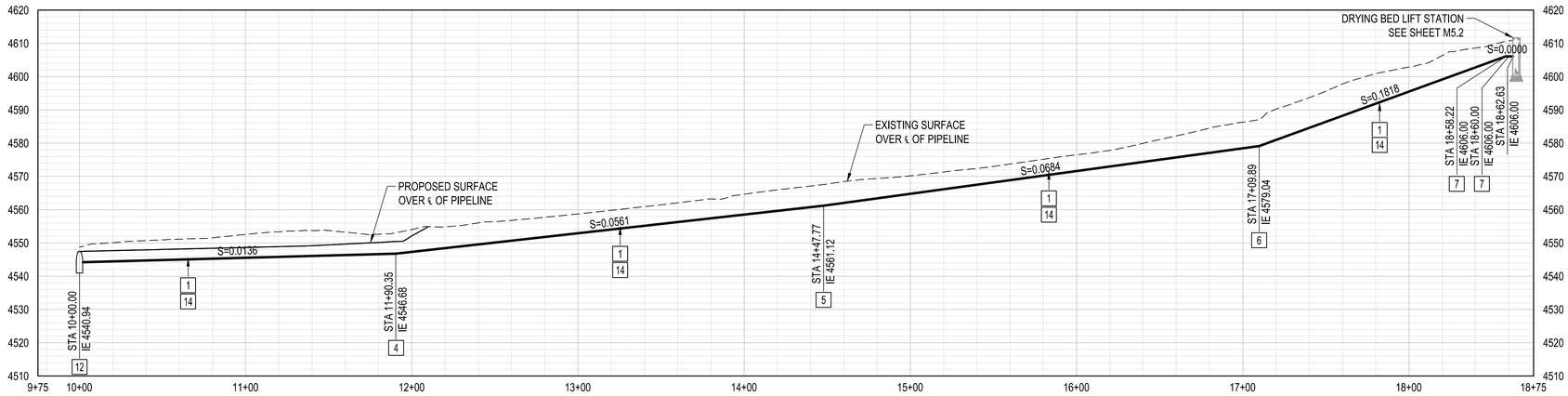

PROFILE L1-L6

SCALE: HORZ: 1" = 40'
VERT: 1" = 20'

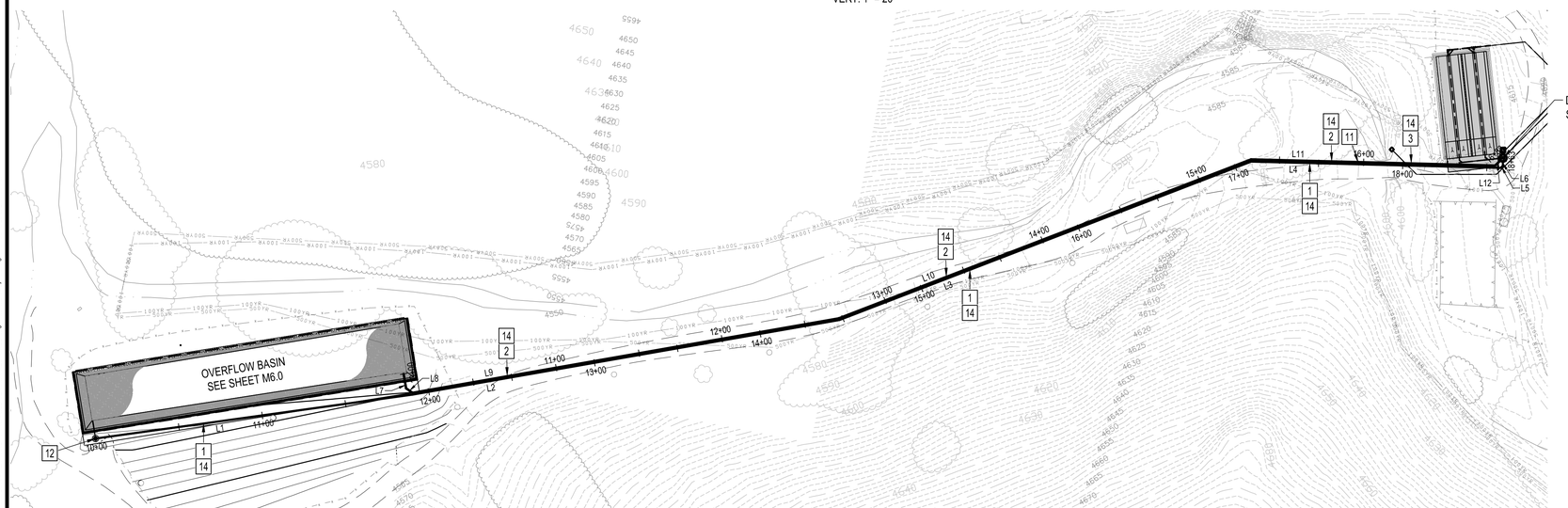

PLAN

SCALE: 1" = 40'

CONSTRUCTION NOTES:

1. INSTALL 2" SCH. 80 PVC PIPE.
2. INSTALL 4" C900 PVC PIPE.
3. INSTALL 4" D.I. PIPE.
4. INSTALL 2" PVC COUPLING.
5. INSTALL 2" - 11.25° SCH. 80 PVC BEND.
6. INSTALL 2" - 22.5° SCH. 80 PVC BEND.
7. INSTALL 2" - 45° SCH. 80 PVC BEND.
8. INSTALL 4" - 11.25° D.I. BEND W/ MJ CONNECTIONS W/ THRUST BLOCKS PER DETAIL C SHEET M8.0.
9. INSTALL 4" - 22.5° D.I. BEND W/ MJ CONNECTIONS W/ THRUST BLOCKS PER DETAIL C SHEET M8.0.
10. INSTALL 4" - 45° D.I. BEND W/ MJ CONNECTIONS W/ THRUST BLOCKS PER DETAIL C SHEET M8.0.
11. INSTALL PVC TO DIP TRANSITION COUPLING, ROMAC OR EQUAL.
12. INSTALL OVERFLOW LIFT STATION PER DETAIL A, SHEET M8.2.
13. INSTALL CLEANOUT PER DETAIL I SHEET M8.3.
14. TRENCH AND BACKFILL PER DETAIL D, SHEET M8.1.

LINE DATA

LINE #	DISTANCE	BEARING	START POINT	END POINT
L1	190.35'	S19°06'20"E	N 1366295.09, E 642622.30	N 1366115.23, E 642684.60
L2	257.42'	S21°06'20"E	N 1366115.23, E 642684.60	N 1365875.07, E 642777.30
L3	262.12'	S32°14'38"E	N 1365875.07, E 642777.30	N 1365653.38, E 642917.15
L4	148.33'	S9°44'37"E	N 1365653.38, E 642917.15	N 1365507.19, E 642942.25
L5	1.78'	S54°44'37"E	N 1365507.19, E 642942.25	N 1365506.16, E 642943.70
L6	2.63'	N80°21'09"E	N 1365506.16, E 642943.70	N 1365506.60, E 642946.29
L7	8.67'	S69°03'53"W	N 1366122.94, E 642695.54	N 1366119.84, E 642687.44
L8	4.64'	S23°54'58"W	N 1366119.84, E 642687.44	N 1366115.60, E 642685.56
L9	257.22'	S21°06'20"E	N 1366115.60, E 642685.56	N 1365875.63, E 642778.18
L10	262.55'	S32°17'02"E	N 1365875.63, E 642778.18	N 1365653.67, E 642918.41
L11	145.05'	S9°44'32"E	N 1365653.67, E 642918.41	N 1365510.71, E 642942.95
L12	4.51'	S54°44'04"E	N 1365510.71, E 642942.95	N 1365508.11, E 642946.64

NO	BY	DATE	REVISIONS	DATE	APP.

Professional Engineer (Civil)
CERTIFICATE NO.
Registered
Signed
ARIZONA, U.S.A.
Expires 12/31/28

PREPARED BY: PACE
DESIGNED BY: NE
DRAWN BY: DS, WW
CHECKED BY: TP
SCALE: AS NOTED
DATE: NOV 2025
JOB NO. B614

TITLE: PLAN & PROFILE

THESE DRAWINGS ARE THE PROPERTY OF P.A.C.E. AND SHALL NOT BE REPRODUCED IN ANY MANNER NOR BE USED FOR CONSTRUCTION UNLESS STAMPED 'ISSUED FOR CONSTRUCTION'.

100% ISSUED FOR BID

JOB: TOWN OF JEROME WASTEWATER TREATMENT PLANT — YAVAPAI CO. AZ

PREPARED BY: TAYLOR B. PIERCE
PACE Advanced Water Engineering
6723 E. VIA CONSUELO, SCOTTSDALE, AZ 85258
P: (480) 991-3595 | www.pacewater.com
R.C.E 70097 DATE

SHEET M2.5
34 OF 99 SHEETS

JOB NO. B614

NORTH
40 20 0 40 80

CALL TWO WORKING DAYS BEFORE YOU DIG
602-263-1100
1-800-STAKE-IT
(OUTSIDE MARICOPA COUNTY)

W:\B614\Engineering\B614-3\sheets\B614 - M2.1 YARD PIPING - OLD VERSION RESTORED.dwg - Tab: M2.5 - by reddington on 03/10/26 at 2:03:53 PM

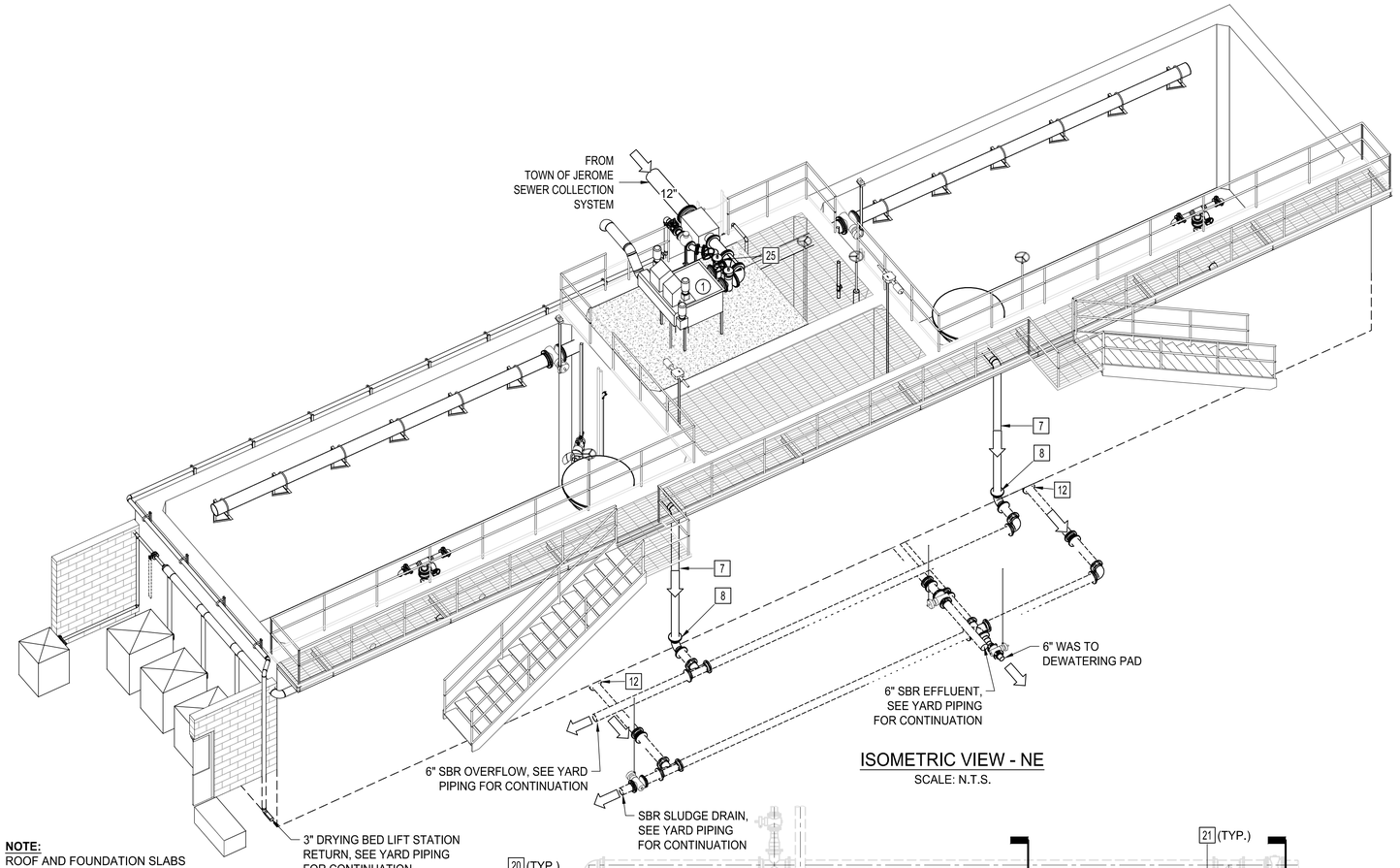

ISOMETRIC VIEW - NE

SCALE: N.T.S.

NOTE:
ROOF AND FOUNDATION SLABS
NOT SHOWN FOR CLARITY.

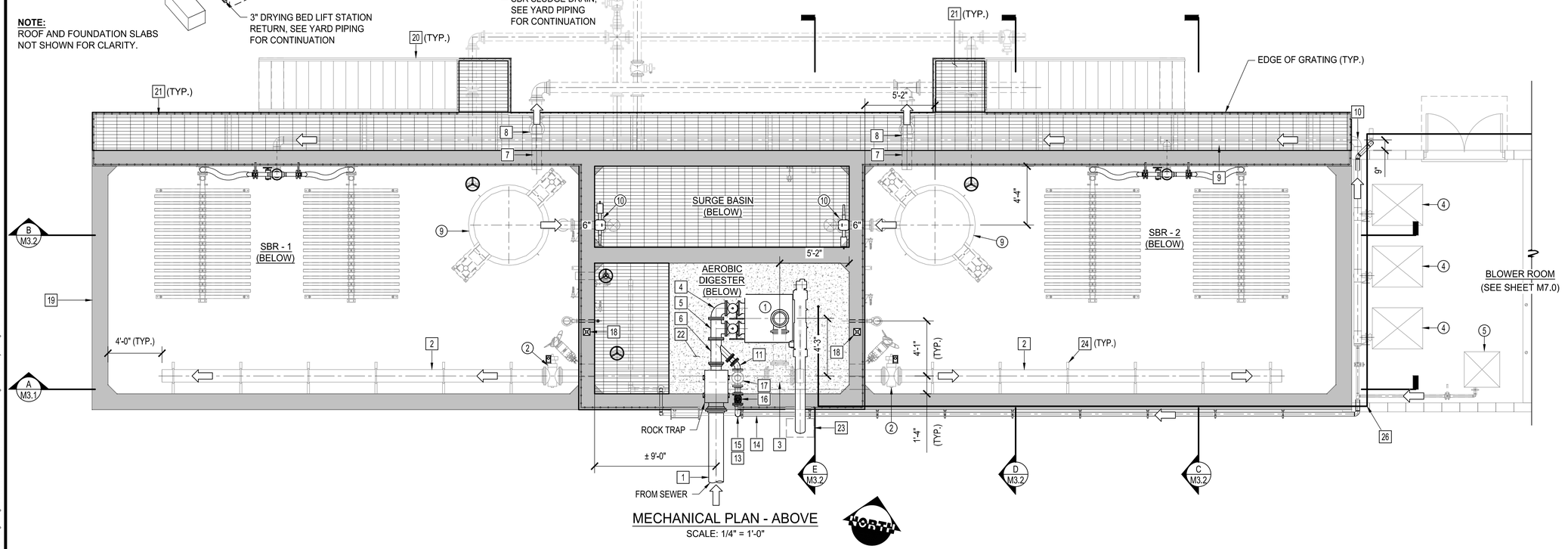

MECHANICAL PLAN - ABOVE

SCALE: 1/4" = 1'-0"

CONSTRUCTION NOTES:

1. INSTALL 12" D.I. PIPE (FLG'D).
2. INSTALL 10" D.I. PIPE (FLG'D).
3. INSTALL 10" D.I. TEE (FLG'D).
4. INSTALL 8" - 90° D.I. BEND (FLG'D).
5. INSTALL 8" D.I. TEE (FLG'D).
6. INSTALL 8"x4" D.I. REDUCING WYE (FLG'D).
7. INSTALL 6" SDR35 PVC PIPE.
8. INSTALL 6" - 90° SDR35 PVC BEND (MJ).
9. INSTALL 6" SCH. 10 CARBON STEEL PIPE.
10. INSTALL 6" - 90° SCH. 10 CARBON STEEL BEND.
11. INSTALL 4" - 45° D.I. BEND (FLG'D).
12. INSTALL 6" - 90° D.I. BEND (MJ).
13. INSTALL 4"x 3" D.I. REDUCER (FLG'D).
14. INSTALL 3" SCH. 80 PVC PIPE.
15. INSTALL 4" - 90° SCH. 80 PVC BEND.
16. INSTALL 4" PVC PLUG VALVE.
17. INSTALL 4" SCH. 80 PVC CHECK VALVE.
18. INSTALL DAVIT CRANE BASE (APPROX. LOCATION).
19. SBR STRUCTURE (SEE STRUCTURAL).
20. STAIRS & RAILING PER MANUFACTURER.
21. GRATING PER MANUFACTURER.
22. CONCRETE SLAB PER STRUCTURAL.
23. WASTE BIN (BY OTHERS).
24. INSTALL PIPE SUPPORTS PER DETAIL A SHT M8.5
25. INSTALL 8" PLUG VALVE, FLG'D.
26. INSTALL 2" SCH. 80 PVC POTABLE WATER

NO	BY	DATE	REVISIONS	DATE	APP.

Registered Professional Engineer (Civil)
CERTIFICATE NO. 70097
Timothy B. Pierce
Signed
ARIZONA, U.S.A.
Expires 12/31/28

PREPARED BY: PACE
DESIGNED BY: NE
DRAWN BY: DS, WW
CHECKED BY: TP
SCALE: AS NOTED
DATE: NOV 2025
JOB NO. B614

THESE DRAWINGS ARE THE PROPERTY OF P.A.C.E. AND SHALL NOT BE REPRODUCED IN ANY MANNER NOR BE USED FOR CONSTRUCTION UNLESS STAMPED 'ISSUED FOR CONSTRUCTION'.

TITLE
SBR MECHANICAL PLAN

JOB
TOWN OF JEROME
WASTEWATER
TREATMENT PLANT
YAVAPAI CO. AZ

100% ISSUED FOR BID

PREPARED BY:
PACE
Advanced Water Engineering
8723 E. VIA DE COMMERCIO, BLDG. 3, SCOTTSDALE, CA 85258
P: (480) 991-3595 | www.pacewater.com
TAYLOR B. PIERCE R.C.E. 70097 DATE

SHEET
M3.0
35 OF 99 SHEETS

JOB NO. B614

W:\B614\Engineering\B614-3\Sheets\B614 - M3.0 MECHANICAL PLAN.dwg - Tab: M3.0 - by neddington on 02/19/26 at 9:31:42 AM

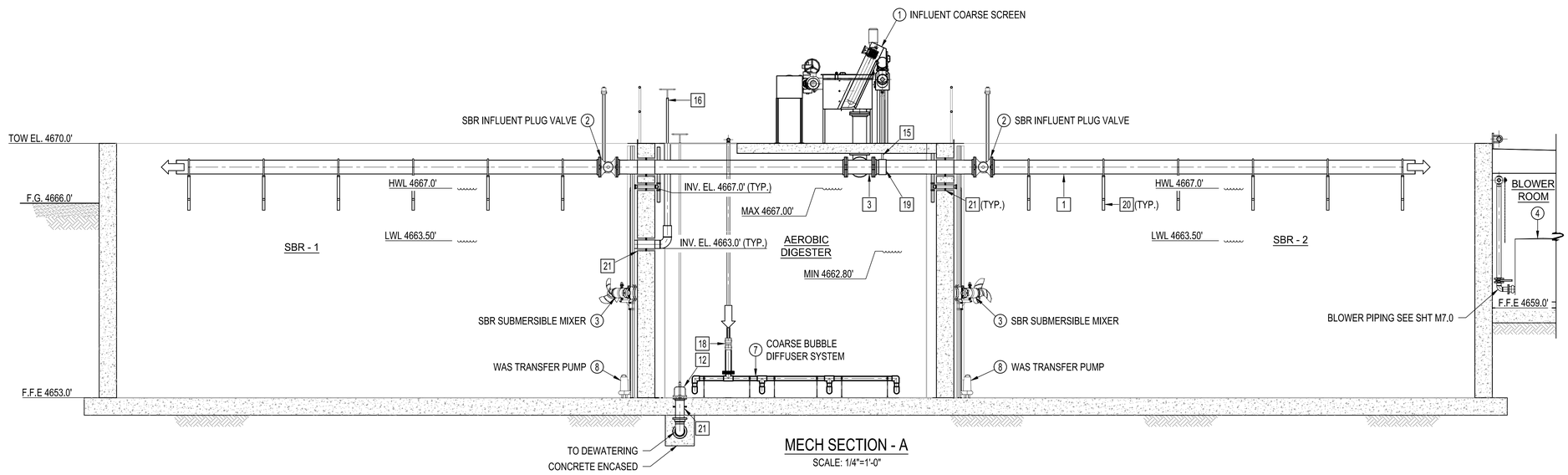

MECH SECTION - A

SCALE: 1/4"=1'-0"

CONSTRUCTION NOTES:

1. INSTALL 10" INFLUENT D.I. PIPE (FLG'D).
2. INSTALL 10" - 90° D.I. BEND (FLG'D).
3. INSTALL 10" D.I. TEE (FLG'D).
4. INSTALL 6" x 4" PVC REDUCER.
5. INSTALL 6" SDR35 PVC PIPE.
6. INSTALL 6" - 90° SDR35 PVC BEND (MJ).
7. INSTALL 6" C900 PVC PIPE.
8. INSTALL 6" - 90° D.I. BEND (MJ).
9. INSTALL 6" C900 PVC CROSS (MJ).
10. INSTALL 6" C900 PVC TEE (MJ).
11. INSTALL 3" SCH. 80 PVC PIPE.
12. INSTALL MUD VALVE w/ STEM RISER (SIZE PER PLAN).
13. SBR STRUCTURE (SEE S2.0).
14. INSTALL 2' x 2' SUMP PER STRUCTURAL PLANS.
15. INSTALL 1" DRAIN LINE FROM SCREEN.
16. INSTALL 6" TELESCOPING VALVE W/ HANDWHEEL.
17. INSTALL 6" BUTTERFLY VALVE W/ ACTUATOR (VENDOR PROVIDED).
18. INSTALL 2"x4" SS TO PVC CONCENTRIC REDUCER (SEE SECTION - A)
19. INSTALL TAP PER PLAN.
20. INSTALL PIPE SUPPORTS PER DETAIL A ON SHEET M8.5.
21. PIPE PENETRATION PER DETAIL G ON SHEET M8.4
22. INSTALL 6" PLUG VALVE.
23. INSTALL 4" PLUG VALVE.
24. INSTALL 6" SCH. 10 CARBON STEEL 90 DEG BEND.
25. INSTALL 6" SCH. 10 CARBON STEEL TEE.
26. INSTALL 6" SCH. 10 CARBON STEEL PIPE.

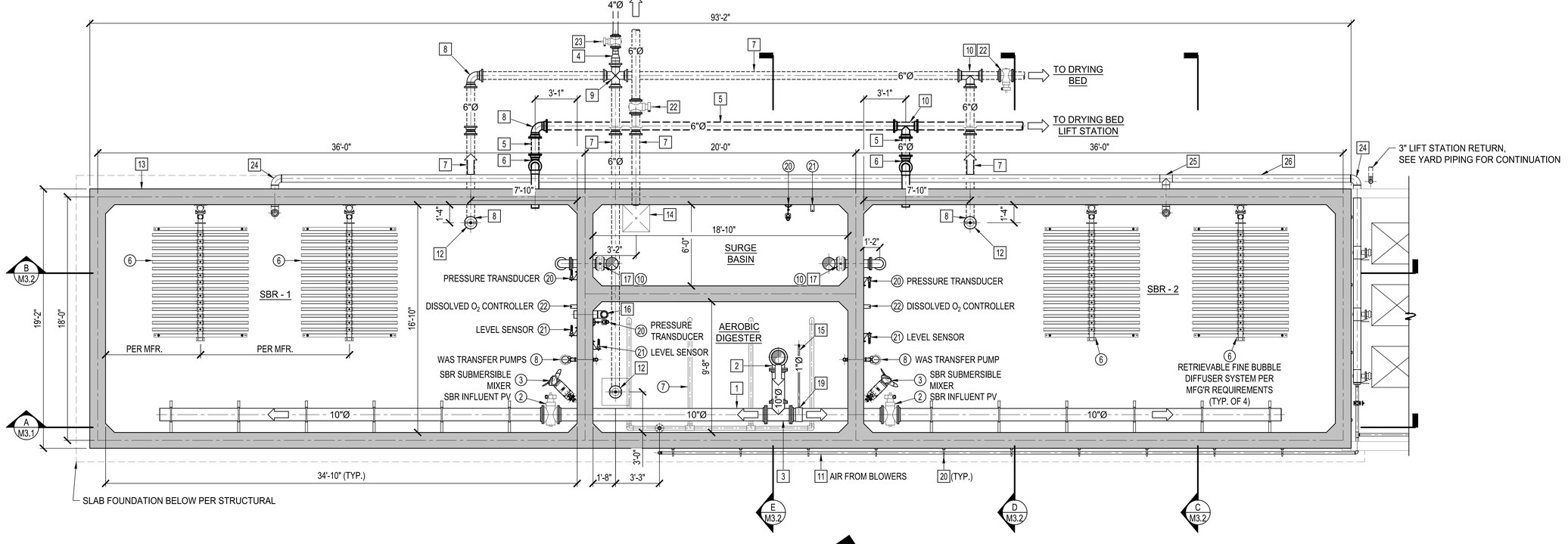

MECHANICAL PLAN - BELOW

SCALE: 1/4" = 1'-0"

NORTH

100% ISSUED FOR BID

PREPARED BY: TAYLOR B. PIERCE

PACE Advanced Water Engineering
8723 E. Via de Ventura, Suite F-110, Scottsdale, CA 85258
P: (480) 991-3995 | www.pacewater.com
R.C.E 70097 DATE

PREPARED BY:	PACE
DESIGNED BY:	NE
DRAWN BY:	DS, WW
CHECKED BY:	TP
SCALE:	AS NOTED
DATE	NOV 2025
JOB NO.	B614

NO	BY	DATE	REVISIONS	DATE	APP.

Registered Professional Engineer (Civil) CERTIFICATE NO. 70097 Timothy Paul Pierce Signed ARIZONA, U.S.A. Expires 12/31/28

THESE DRAWINGS ARE THE PROPERTY OF P.A.C.E. AND SHALL NOT BE REPRODUCED IN ANY MANNER NOR BE USED FOR CONSTRUCTION UNLESS STAMPED 'ISSUED FOR CONSTRUCTION'.

TITLE: SBR MECHANICAL PLAN

JOB: TOWN OF JEROME
WASTEWATER
TREATMENT PLANT
YAVAPAI CO. AZ

SHEET M3.1
36 OF 99 SHEETS

JOB NO. B614

W:\B614\Engineering\B614-3D\sheets\B614 - M3.0 MECHANICAL PLAN.dwg - Tab: M3.1 - by reddington on 02/19/26 at 9:31:42 AM

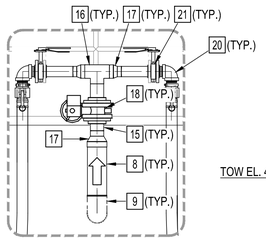

DETAIL - A

SCALE: 1/2"=1'-0"

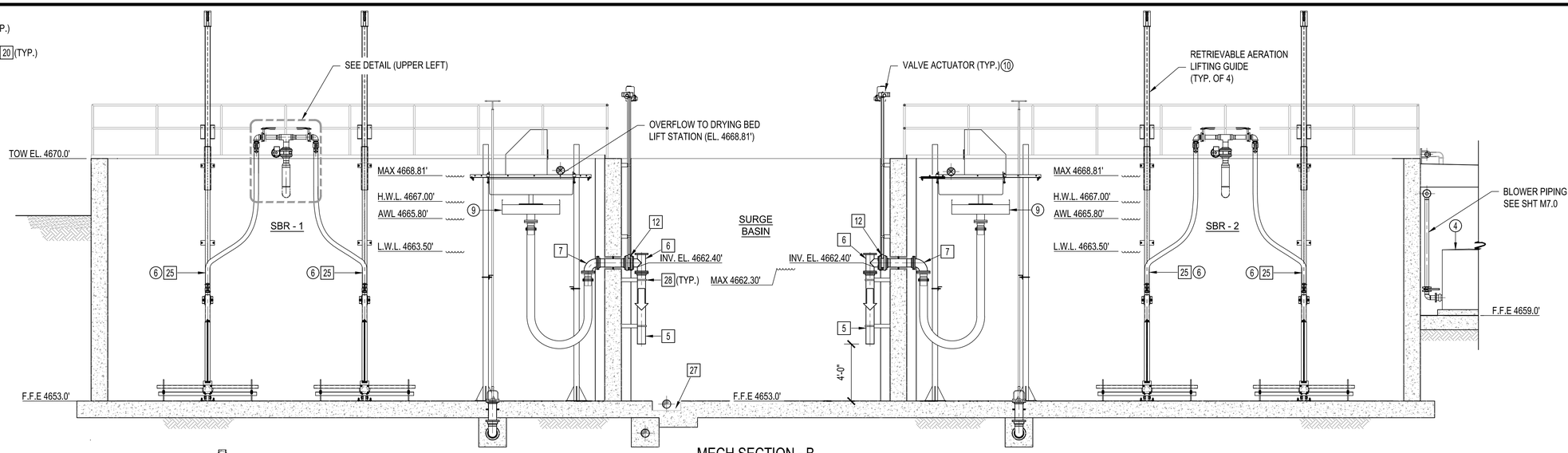

MECH SECTION - B

SCALE: 1/4"=1'-0"

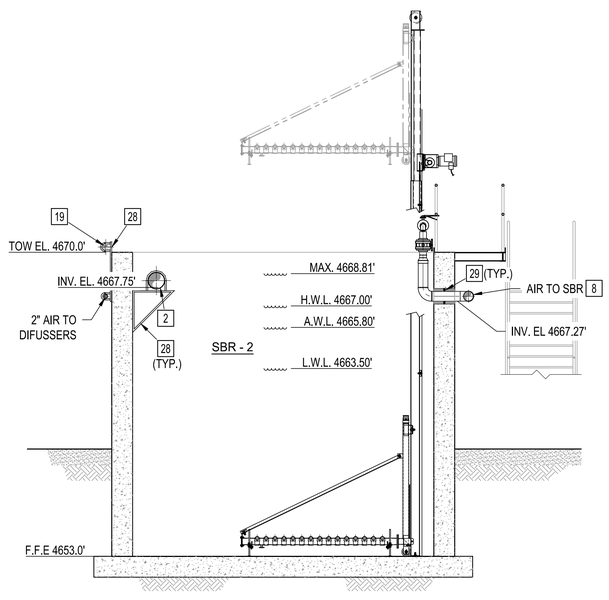

MECH SECTION - C

SCALE: 1/4"=1'-0"

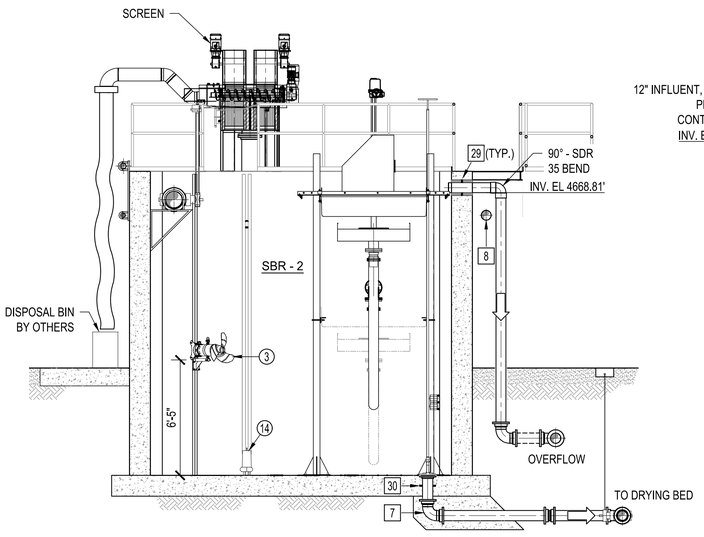

MECH SECTION - D

SCALE: 1/4"=1'-0"

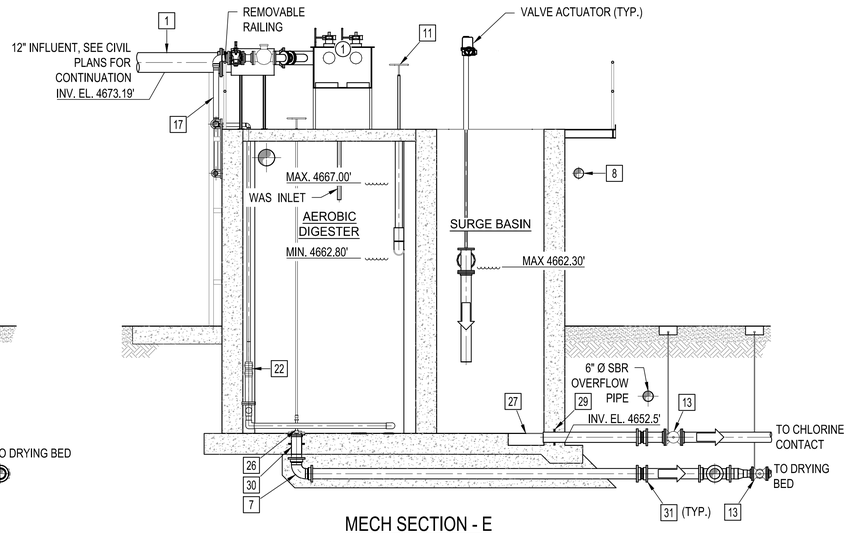

MECH SECTION - E

SCALE: 1/4"=1'-0"

CONSTRUCTION NOTES:

1. INSTALL12" D.I. PIPE (FLG'D).
2. INSTALL 10" INFLUENT D.I. PIPE (FLG'D).
3. INSTALL 10" - 90° D.I. BEND (FLG'D).
4. INSTALL 10" D.I. TEE (FLG'D).
5. INSTALL 6" D.I. PIPE (FLG'D).
6. INSTALL 6" D.I. TEE (FLG'D)
7. INSTALL 6" - 90° D.I. BEND (FLG'D).
8. INSTALL 6" SCH. 10 CARBON STEEL PIPE.
9. INSTALL 6" - 90° CARBON STEEL BEND.
10. INSTALL 6" - 90° CARBON STEEL BEND (FLG'D).
11. INSTALL 6" TELESCOPING VALVE W/ HANDWHEEL.
12. INSTALL 6" BUTTERFLY VALVE W/ ACTUATOR PER SPECIFICATIONS.
13. INSTALL BURRIED-SERVICE 6" PLUG VALVE WITH VALVE CAN AND NUT EXTENSION.
14. INSTALL 4" D.I. PIPE (FLG'D).
15. INSTALL 4" SCH. 10 CARBON STEEL PIPE.
16. INSTALL 4" SCH. 10 CARBON STEEL TEE.
17. INSTALL 4" x 3" SCH. 10 CARBON STEEL CONCENTRIC REDUCER.
18. INSTALL 4" ELECTRICALLY ACTUATED BUTTERFLY VALVE (VENDOR PROVIDED)
19. INSTALL 3" SCH. 80 PVC PIPE.
20. INSTALL 3" - 90° CARBON STEEL BEND (GROOVED).
21. INSTALL 3" BUTTERFLY VALVE PER SPECIFICATIONS.
22. INSTALL 2"x4" SS TO PVC CONCENTRIC REDUCER (SEE SECTION - A)
23. INSTALL 2" SCH. 10 CARBON STEEL PIPE.
24. INSTALL 2" SCH. 10 WELDED CARBON STEEL 90° BEND.
25. INSTALL RETRIEVABLE DIFFUSER ASSEMBLY w/ FLEXIBLE HOSE.
26. INSTALL MUD VALVE w/ EXTENSION PER PLAN.
27. INSTALL 2'x2' SUMP PER STRUCTURAL PLANS.
28. INSTALL PIPE SUPPORTS PER DETAIL A ON SHEET M8.5.
29. INSTALL PIPE PENETRATION PER DETAIL G SHEET M8.4.
30. INSTALL PIPE PENETRATION PER DETAIL F SHEET M8.3.
31. INSTALL DEFLECTION COUPLING.

NO	BY	DATE	REVISIONS	DATE	APP.

Registered Professional Engineer (Civil) CERTIFICATE NO. 70097 TAYLOR B. PIERCE Signed ARIZONA, U.S.A. Expires 12/31/28

THESE DRAWINGS ARE THE PROPERTY OF P.A.C.E. AND SHALL NOT BE REPRODUCED IN ANY MANNER NOR BE USED FOR CONSTRUCTION UNLESS STAMPED 'ISSUED FOR CONSTRUCTION'.

PREPARED BY: PACE
DESIGNED BY: NE
DRAWN BY: DS, WW
CHECKED BY: TP
SCALE: AS NOTED
DATE: NOV 2025
JOB NO.: B614

TITLE: **SBR MECHANICAL SECTIONS**

JOB: TOWN OF JEROME WASTEWATER TREATMENT PLANT — YAVAPAI CO. AZ

100% ISSUED FOR BID

PREPARED BY: TAYLOR B. PIERCE R.C.E 70097 DATE

PACE
Advanced Water Engineering
8723 E. Via de Ventura, Suite 250 | SCOTTSDALE, CA 85258
P: (480) 991-3995 | www.pacewater.com

SHEET **M3.2**
37 OF 99 SHEETS

JOB NO. B614

W:\B614\Engineering\B614-30sheets\B614 - M3.2 MECHANICAL SECTIONS.dwg - Tab: M3.2 - by raddington on 11/17/25 at 2:34:34 PM

CONSTRUCTION NOTES:

1. INSTALL CONCRETE CHLORINE CONTACT CHANNEL PER STRUCTURAL SHT S1.5.
2. INSTALL TABLET EROSION CHLORINATION EQUIPMENT.
3. INSTALL TABLET EROSION DE-CHLORINATION EQUIPMENT.
4. INSTALL SOLID METAL GRATING WALKWAY PER SPECIFICATION 05 53 00.
5. INSTALL UPWARD WEIR GATE PER SPECIFICATION 40 0513.53.
6. INSTALL 6" FLOW METER.
7. INSTALL 6" ACTUATED BUTTERFLY VALVE.
8. INSTALL 3' x 3' CAST IN PLACE BOX & TRAFFIC RATED COVER.
9. INSTALL 6" D.I. PIPE.
10. INSTALL 6" - 90° D.I. BEND.
11. INSTALL 6" - 90° SCH. 40 PVC BEND.
12. INSTALL PIPE SUPPORTS PER DETAIL A SHEET M8.5.
13. INSTALL PVC FLANGE ADAPTER.
14. INSTALL 6" SCH. 40 PVC PIPE.
15. INSTALL 4" ELECTRICALLY ACTUATED PLUG VALVE.
16. INSTALL DEWATERING FEED PUMP.
17. INSTALL DRY POLYMER MAKE-DOWN AND FEED UNIT.
18. INSTALL POLYMER METERING PUMP.
19. INSTALL BAGGER SYSTEM CONTROL PANEL.
20. INSTALL 2" X 1" PVC REDUCING BUSHING.
21. INSTALL 2" SCH. 80 PVC TEE.
22. INSTALL 2" - 90° SCH. 80 PVC BEND.
23. INSTALL PVC CAP.
24. INSTALL 4" X 2" DI REDUCER.
25. INSTALL SHADE STRUCTURE (PER STRUCTURAL SHT S2.10).
26. INSTALL 30" ALUMINUM STEP-UP STAIRCASE.
27. INSTALL METAL GRATING WALKWAY PER SPECIFICATION 05 53 00.
28. INSTALL PIPE PENETRATION PER DETAIL G, SHEET M8.4.

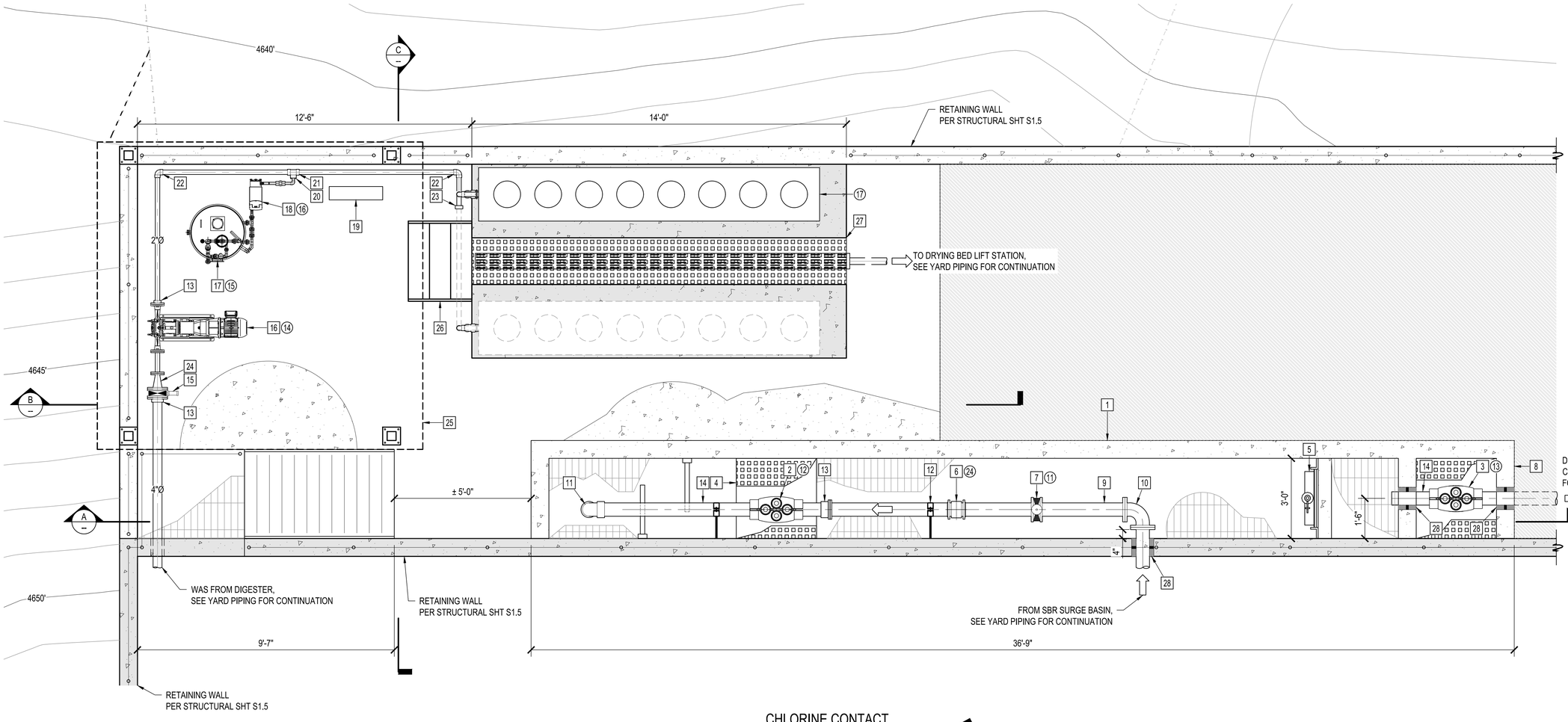

CHLORINE CONTACT
CHANNEL PLAN
SCALE: 1/2"=1'-0"

NORTH

NO	BY	DATE	REVISIONS	DATE	APP.

Registered Professional Engineer (Civil) CERTIFICATE NO. 70097 Timothy B. Pierce Signed ARIZONA, U.S.A. Expires 12/31/28

PREPARED BY: PACE
DESIGNED BY: NE
DRAWN BY: DS, WW
CHECKED BY: TP
SCALE: AS NOTED
DATE: NOV 2025
JOB NO.: B614

THESE DRAWINGS ARE THE PROPERTY OF P.A.C.E. AND SHALL NOT BE REPRODUCED IN ANY MANNER NOR BE USED FOR CONSTRUCTION UNLESS STAMPED 'ISSUED FOR CONSTRUCTION'.

TITLE: **DEWATERING & CCC MECH PLAN**

JOB: TOWN OF JEROME
WASTEWATER
TREATMENT PLANT
YAVAPAI CO. AZ

100% ISSUED FOR BID

PREPARED BY:
PACE
Advanced Water Engineering
8723 E. VIA DE VENTURA, SUITE 290 | SCOTTSDALE, CA 85258
P: (480) 991-3995 | www.paceaztec.com
TAYLOR B. PIERCE R.C.E 70097 DATE

SHEET
M4.0
38 OF 99 SHEETS

JOB NO. B614

W:\B614\Engineering\B614-30sheets\B614 - M4.0 CCC MECH PLAN AND SECTIONS.dwg - Tab: PLAN VIEW - by reddington on 03/02/26 at 8:58:43 AM

CONSTRUCTION NOTES:

1. INSTALL CONCRETE CHLORINE CONTACT CHANNEL PER STRUCTURAL SHT S1.5.
2. INSTALL TABLET EROSION CHLORINATION EQUIPMENT.
3. INSTALL TABLET EROSION DE-CHLORINATION EQUIPMENT.
4. INSTALL SOLID METAL GRATING WALKWAY PER SPECIFICATION 05 53 00.
5. INSTALL UPWARD WEIR GATE PER SPECIFICATION 40 0513.53.
6. INSTALL 6" FLOW METER.
7. INSTALL 6" ACTUATED BUTTERFLY VALVE.
8. GROUT FILL & SLOPE TO INVERT.
9. INSTALL 6" D.I. PIPE.
10. INSTALL 6" - 90° D.I. BEND.
11. INSTALL PIPE SUPPORTS PER DETAIL A SHEET M8.5.
12. INSTALL 6" - 90° SCH. 40 PVC BEND.
13. INSTALL PVC FLANGE ADAPTER
14. INSTALL 6" SCH. 40 PVC PIPE.
15. INSTALL PIPE PENETRATION PER DETAIL G SHEET M8.4.

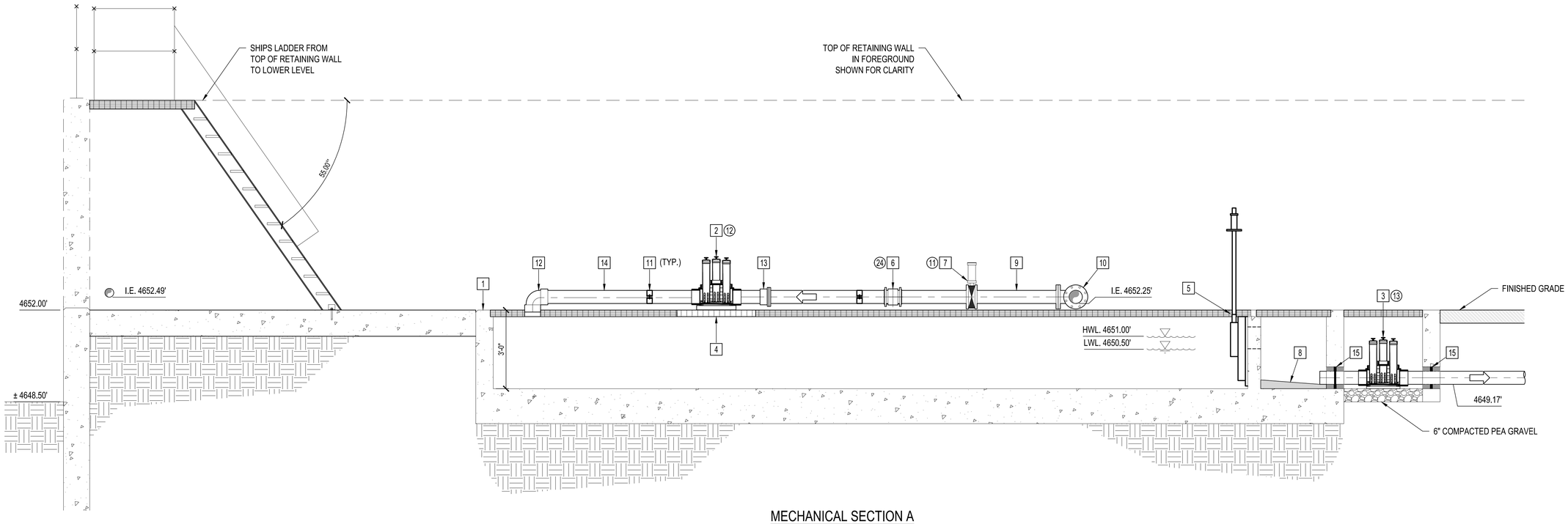

MECHANICAL SECTION A

SCALE: 1/2"=1'-0"

100% ISSUED FOR BID

NO	BY	DATE	REVISIONS	DATE	APP.

Registered Professional Engineer (Civil) CERTIFICATE NO. 70097 Timothy B. Pierce Signed ARIZONA, U.S.A. Expires 12/31/28

THESE DRAWINGS ARE THE PROPERTY OF P.A.C.E. AND SHALL NOT BE REPRODUCED IN ANY MANNER NOR BE USED FOR CONSTRUCTION UNLESS STAMPED 'ISSUED FOR CONSTRUCTION'.

PREPARED BY: PACE
DESIGNED BY: NE
DRAWN BY: DS, WW
CHECKED BY: TP
SCALE: AS NOTED
DATE: NOV 2025
JOB NO.: B614

TITLE: CHLORINE CONTACT BASIN SECTION

JOB: TOWN OF JEROME WASTEWATER TREATMENT PLANT — YAVAPAI CO. AZ

PREPARED BY: TAYLOR B. PIERCE R.C.E 70097 DATE
PACE Advanced Water Engineering
8723 E. Via de Commerce, Suite 104 | Scottsdale, AZ 85258
P: (480) 991-3595 | www.pacewater.com

SHEET M4.1
39 OF 99 SHEETS

JOB NO. B614

W:\B614\Engineering\B614-30\sheets\B614 - MM.0 CCC MECH PLAN AND SECTIONS.dwg - Tab: SECTION 1 - by reddington on 03/02/26 at 9:58:43 AM

CONSTRUCTION NOTES:

1. INSTALL CONCRETE CHLORINE CONTACT CHANNEL PER STRUCTURAL SHT S1.5.
2. INSTALL SOLID METAL GRATING WALKWAY PER SPECIFICATION 05 53 00.
3. INSTALL 6" D.I. PIPE.
4. INSTALL SLUDGE BAGGER SYSTEM.
5. INSTALL SHADE STRUCTURE (PER STRUCTURAL SHT S2.10).
6. INSTALL 14 LF TRENCH DRAIN, NEI MODEL R4996-A8. OR ENGINEER APPROVED EQUAL.
7. INSTALL METAL GRATING WALKWAY PER SPECIFICATION 05 53 00.
8. INSTALL 1" PVC CHECK VALVE.
9. INSTALL 1" BALL VALVE.
10. INSTALL 1" - 90° SCH. 80 PVC BEND.
11. INSTALL 2" SCH. 80 PVC PIPE.
12. INSTALL BAGGER SYSTEM CONTROL PANEL.
13. INSTALL POLYMER METERING PUMP.
14. INSTALL DRY POLYMER MAKE-DOWN AND FEED UNIT.
15. INSTALL DEWATERING FEED PUMP.
16. INSTALL 3" - 90° SCH. 80 PVC BEND.
17. INSTALL 3" SCH. 80 PVC PIPE.
18. INSTALL 3" SCH.80 PVC TEE.
19. INSTALL PVC CAP.
20. RETAINING WALL, PER STRUCTURAL PLANS
21. INSTALL 30" ALUMINUM STEP-UP STAIRCASE.
22. INSTALL 2" - 90° SCH. 80 PVC BEND.
23. PIPE PENETRATION PER G SHEET M8.4.

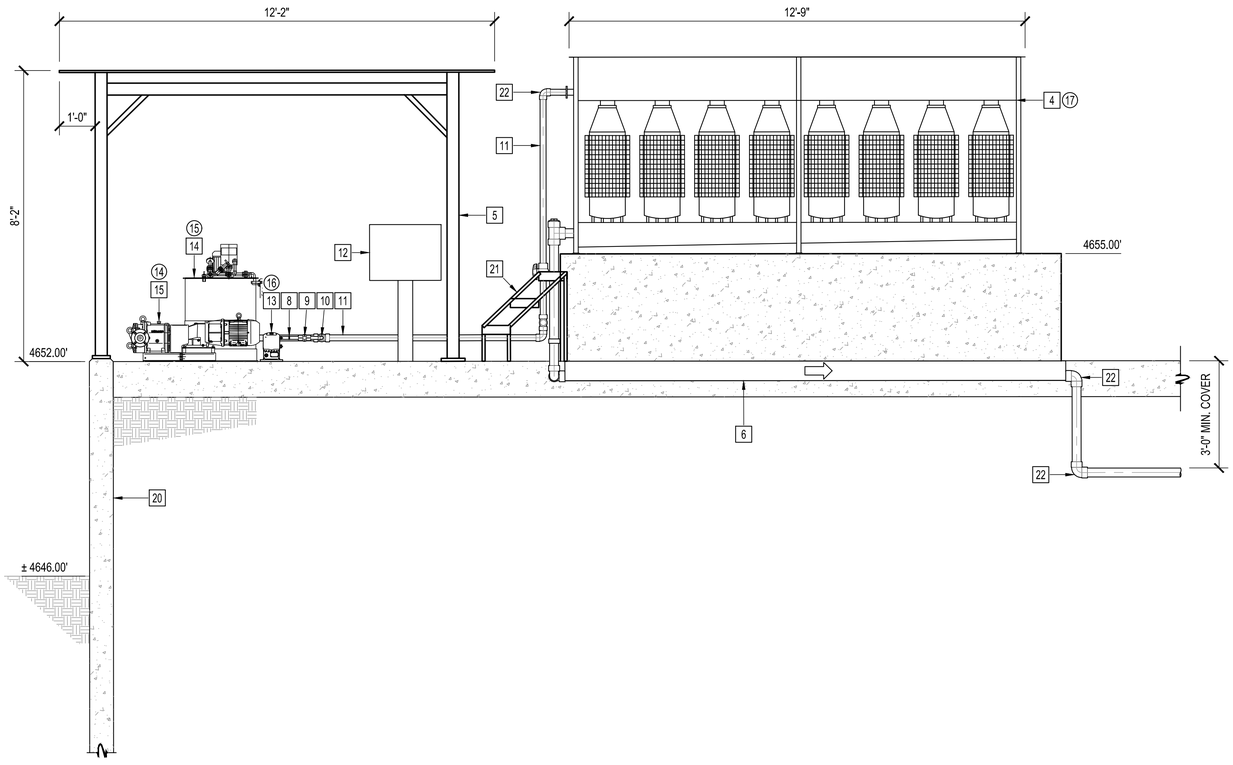

MECHANICAL SECTION B
SCALE: 1/2"=1'-0"

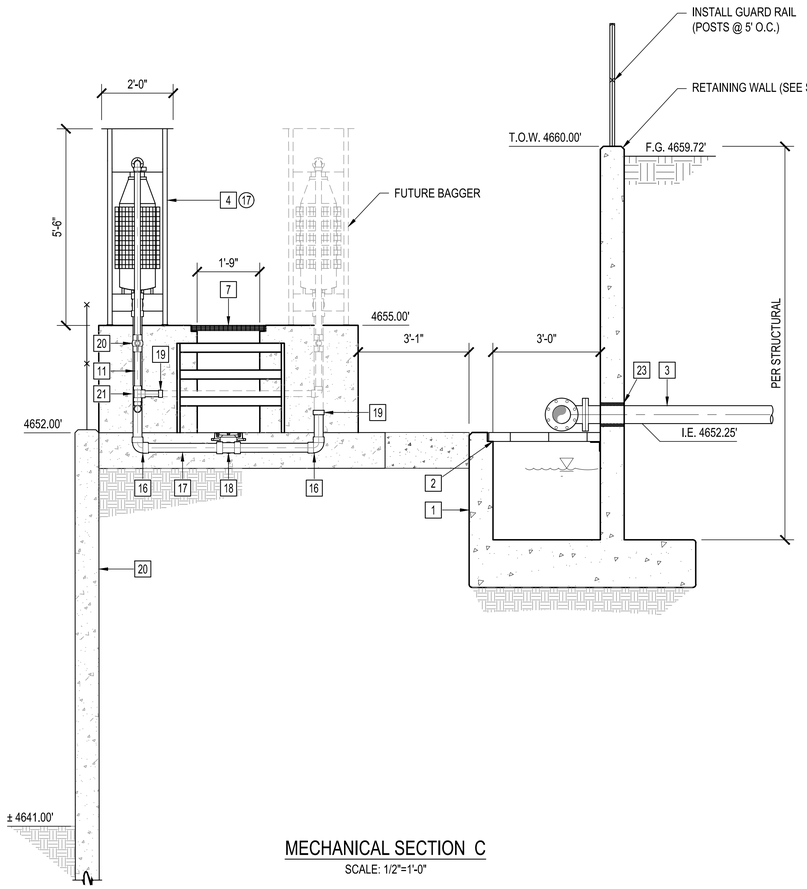

MECHANICAL SECTION C
SCALE: 1/2"=1'-0"

THESE DRAWINGS ARE THE PROPERTY OF P.A.C.E. AND SHALL NOT BE REPRODUCED IN ANY MANNER NOR BE USED FOR CONSTRUCTION UNLESS STAMPED 'ISSUED FOR CONSTRUCTION'.

NO	BY	DATE	REVISIONS	DATE	APP.

Registered Professional Engineer (Civil) CERTIFICATE NO. 70097 TAYLOR B. PIERCE Signed STATE OF ARIZONA, U.S.A. Expires 12/31/28

PREPARED BY: PACE
DESIGNED BY: NE
DRAWN BY: DS, WW
CHECKED BY: TP
SCALE: AS NOTED
DATE: NOV 2025
JOB NO. B614

DEWATERING SECTION

TITLE

JOB
TOWN OF JEROME
WASTEWATER
TREATMENT PLANT
YAVAPAI CO. AZ

100% ISSUED FOR BID

PREPARED BY:
PACE
Advanced Water Engineering
8723 E. VIA de VENTURA, SUITE 290 | SCOTTSDALE, CA 85258
P: (480) 991-3995 | www.paceaz.com
TAYLOR B. PIERCE R.C.E 70097 DATE

SHEET
M4.2
40 OF 99 SHEETS

JOB NO. B614

W:\B614\Engineering\B614-30sheets\B614 - M4.0 CCC MECH PLAN AND SECTIONS.dwg - Tab: SECTION 2 - by reddington on 03/02/26 at 9:58:43 AM

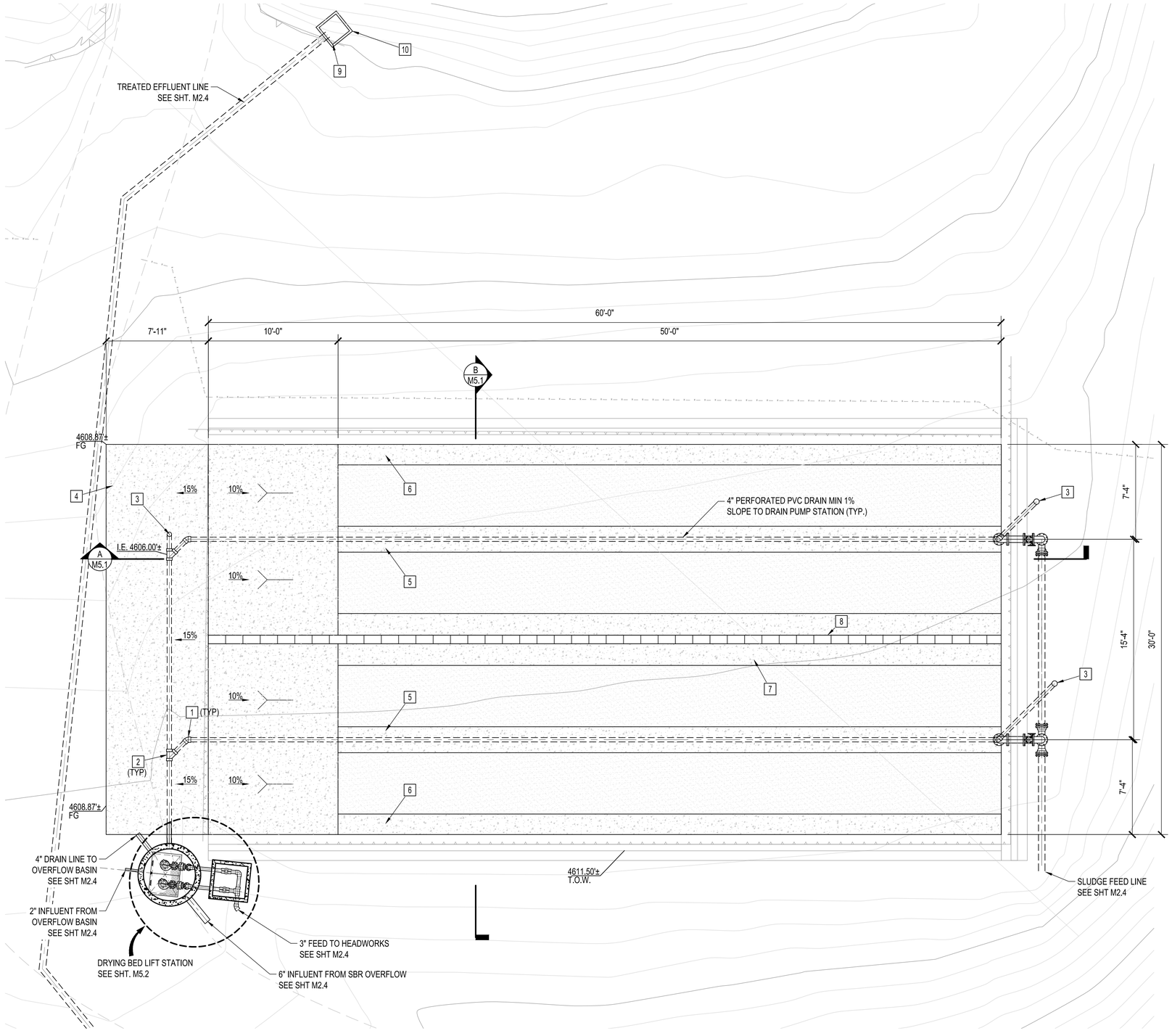

SLUDGE DRYING BED
PLAN VIEW
SCALE: 1/4" = 1'-0"

CONSTRUCTION NOTES:

1. INSTALL 4" - 45° SDR35 PVC BEND.
2. INSTALL 4"x4" SDR35 PVC WYE.
3. INSTALL 4" CLEANOUT PER DETAIL I SHEET M8.3.
4. INSTALL 8" THICK CONCRETE RAMP W #5 AT 12" O.C. EACH WAY, BOTTOM OVER 6" ABC.
5. INSTALL 2'-0" WIDE x8" THICK CONCRETE SLAB W/ 3 #5 CONT. AND #5 AT 16" O.C. TRANS., BOTTOM. TYPICAL OF 2.
6. INSTALL 1'-7" WIDE x8" THICK CONCRETE SLAB W/ 2 #5 CONT. AND #5 AT 16" O.C. TRANS., BOTTOM. TYPICAL OF 2.
7. INSTALL 3'-10" WIDE x12" THICK CONCRETE SLAB W/ 6 #5 CONT. AND #5 AT 16" O.C. TRANS., BOTTOM.
8. INSTALL CMU BLOCK WALL, #5 VERTICAL W/ DOWEL INTO CONCRETE PAD AT 48" O.C. ALTERNATING, GROUT WALL SOLID.
9. INSTALL AUTOSAMPLER, PROVIDED BY TOWN.
10. INSTALL 2'x2'x2' CATCH BASIN TYPE G W/ SINGLE GRATE AND 6" INLET/OUTLET.

NOTES:

1. SLOPE GRADE MIN. 5:1 AWAY AS NEEDED AROUND ENTIRE PERIMETER.
2. PROTECT IN PLACE EXISTING ROADWAY BARRIERS.

NO	BY	DATE	REVISIONS	DATE	APP.

Registered Professional Engineer (Civil)
CERTIFICATE NO.
Timothy B. Pierce
Signed
ARIZONA, U.S.A.
Expires 12/31/28

PREPARED BY: PACE
DESIGNED BY: NE
DRAWN BY: DS, WW
CHECKED BY: TP
SCALE: AS NOTED
DATE: NOV 2025
JOB NO.: B614

THESE DRAWINGS ARE THE PROPERTY OF P.A.C.E. AND SHALL NOT BE REPRODUCED IN ANY MANNER NOR BE USED FOR CONSTRUCTION UNLESS STAMPED 'ISSUED FOR CONSTRUCTION'.

TITLE
SLUDGE DRYING BEDS PLAN

100% ISSUED FOR BID

JOB
TOWN OF JEROME
WASTEWATER
TREATMENT PLANT
YAVAPAI CO. AZ

PREPARED BY:
PACE
Advanced Water Engineering
8723 E. Via de Commercio, Suite 1, Scottsdale, AZ 85258
P: (480) 991-3995 | www.pacewater.com
TAYLOR B. PIERCE R.C.E 70097 DATE

SHEET
M5.0
41 OF 99 SHEETS

JOB NO. B614

W:\B614\Engineering\B614-30\sheets\B614 - M5.0 SLUDGE DRYING BEDS PLAN.dwg - Tab: M5.0 - by neddington on 11/19/25 at 3:14:09 PM

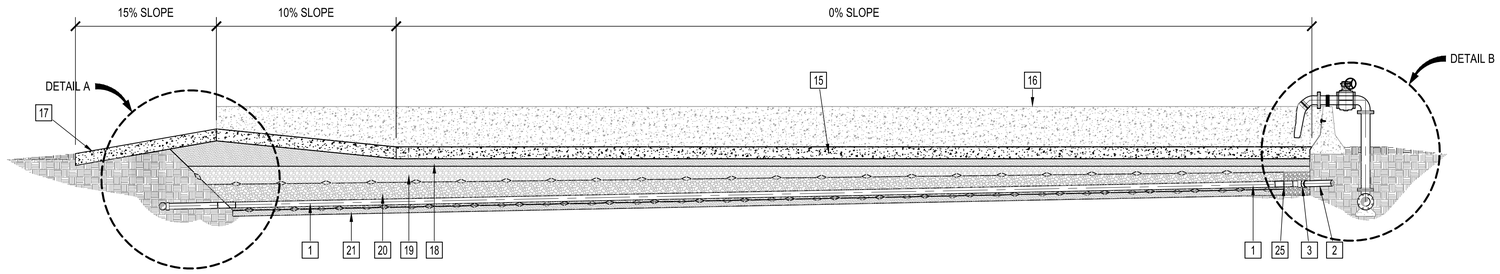

SLUDGE DRYING BED
SECTION - A
SCALE: 1/4" = 1'-0"

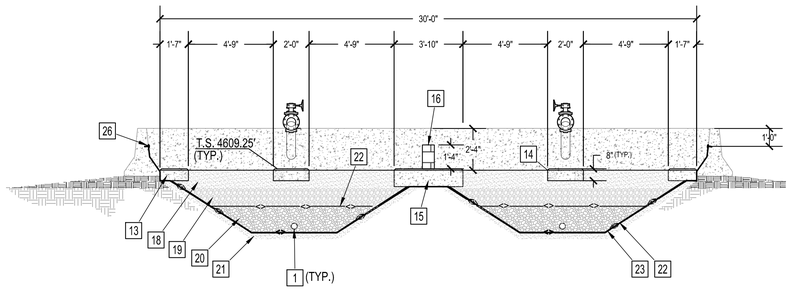

SLUDGE DRYING BED
SECTION - B
SCALE: 1/4" = 1'-0"

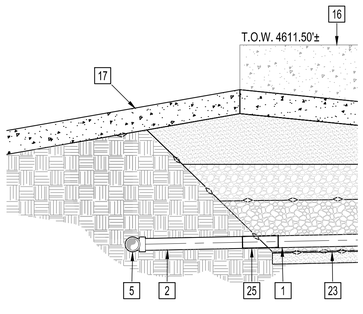

SLUDGE DRYING BED
DETAIL - A
SCALE: 1/2" = 1'-0"

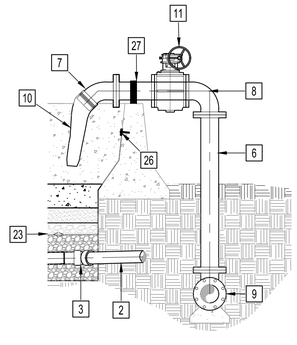

SLUDGE DRYING BED
DETAIL - B
SCALE: 1/2" = 1'-0"

CONSTRUCTION NOTES:

1. INSTALL 4" SDR 35 PVC PERFORATED PIPE.
2. INSTALL 4" SDR 35 PVC PIPE.
3. INSTALL 4" - 45° SDR35 PVC BEND.
4. INSTALL 4" - 90° LONG RADIUS SDR 35 PVC BEND.
5. INSTALL 4" SDR 35 PVC WYE.
6. INSTALL 6" D.I. PIPE.
7. INSTALL 6" - 45° D.I. BEND (FLG'D).
8. INSTALL 6" - 90° D.I. BEND (FLG'D).
9. INSTALL 6"x6"x6" D.I. TEE MJ x FLG'D CONNECTIONS W/ THRUST BLOCK PER DETAIL C SHEET M8.4.
10. INSTALL 6" RUBBER SKIRT W/ SS CLAMPS.
11. INSTALL 6" PLUG VALVE W/ HANDWHEEL.
12. INSTALL 4" CLEANOUT PER DETAIL I SHEET M8.3.
13. INSTALL 1'-7" WIDE x8" THICK CONCRETE SLAB W/ 2 #5 CONT. AND #5 AT 16" O.C. TRANS., BOTTOM. TYPICAL OF 2.
14. INSTALL 2'-0" WIDE x8" THICK CONCRETE SLAB W/ 3 #5 CONT. AND #5 AT 16" O.C. TRANS., BOTTOM. TYPICAL OF 2.
15. INSTALL 3'-10" WIDE x12" THICK CONCRETE SLAB W/ 6 #5 CONT. AND #5 AT 16" O.C. TRANS., BOTTOM.
16. INSTALL CMU BLOCK WALL, #5 VERTICAL W/ DOWEL INTO CONCRETE PAD AT 48" O.C. ALTERNATING, GROUT WALL SOLID.
17. INSTALL 8" THICK CONCRETE RAMP W #5 AT 12" O.C. EACH WAY, BOTTOM OVER 6" ABC.
18. INSTALL 12" SAND LAYER.
19. INSTALL 4-8 mm FINE GRAVEL.
20. INSTALL 1'-6" DEEP ¾" CRUSHED ROCK.
21. INSTALL 4" GRANULAR SAND LAYER.
22. INSTALL 100 mm GEOTEXTILE FABRIC PER SPECS.
23. INSTALL FLEXIBLE POLYPROPYLENE LINER PER SPECS.
24. INSTALL ANCHOR TRENCH PER DETAIL D SHEET M8.3.
25. INSTALL PIPE BOOT PER LINER MANUFACTURER RECOMMENDATIONS AND DETAIL E SHEET M8.3.
26. INSTALL HDPE LINER ANCHOR BOLT, ANCHOR TO EXISTING WALLS PER DETAIL C SHEET M8.3.
27. PIPE SUPPORT / STRAP

NOTES:

1. SLOPE GRADE MIN. 5:1 AWAY AS NEEDED AROUND ENTIRE PERIMETER.
2. PROTECT IN PLACE EXISTING ROADWAY BARRIERS.

NO	BY	DATE	REVISIONS	DATE	APP.

THESE DRAWINGS ARE THE PROPERTY OF P.A.C.E. AND SHALL NOT BE REPRODUCED IN ANY MANNER NOR BE USED FOR CONSTRUCTION UNLESS STAMPED 'ISSUED FOR CONSTRUCTION'.

Registered Professional Engineer (Civil) CERTIFICATE NO. 70097 TAYLOR B. PIERCE Signed ARIZONA, U.S.A. Expires 12/31/28

PREPARED BY:	PACE		
DESIGNED BY:	NE		
DRAWN BY:	DS, WW		
CHECKED BY:	TP	SCALE:	AS NOTED
DATE	NOV 2025		
JOB NO.	B614		

TITLE: **SLUDGE DRYING BEDS SECTIONS**

JOB: TOWN OF JEROME WASTEWATER TREATMENT PLANT — YAVAPAI CO. AZ

100% ISSUED FOR BID

PREPARED BY:
PACE
Advanced Water Engineering
ARIZONA OFFICE: 8123 E. VIA DE COMERCIO, SUITE A-1, SCOTTSDALE, CA 85258
P: (480) 991-3595 | www.pacewater.com
TAYLOR B. PIERCE R.C.E 70097 DATE

SHEET
M5.1
42 OF 99 SHEETS

JOB NO. B614

W:\B614\Engineering\B614-3\Sheets\B614 - M5.0 SLUDGE DRYING BEDS PLAN.dwg - Tab: M5.1 - by maddington on 11/18/25 at 3:14:09 PM

CONSTRUCTION NOTES:

1. INSTALL 3" SCH. 80 PVC PIPE.
2. INSTALL 3" - 45° SCH. 80 PVC BEND.
3. INSTALL 3" - 90° DIP BEND.
4. INSTALL 3" SCH. 80 PVC TEE.
5. INSTALL 3" DIP PLUG VALVE.
6. INSTALL 3" DIP SWING CHECK VALVE.
7. INSTALL S.S PIPE SUPPORT PER DETAIL A SHEET M8.5.
8. INSTALL SUBMERSIBLE PUMP.
9. INSTALL 24"x36" ACCESS HATCH.
10. INSTALL LEVEL FLOAT ASSEMBLY AND SUPPORT STEM PER MANUFACTURER RECOMMENDATIONS.
11. INSTALL PUMP GUIDE RAIL SYSTEM PER MANUFACTURER RECOMMENDATIONS.
12. INSTALL PIPE PENETRATION PER DETAIL G SHEET M8.4.
13. INSTALL PRECAST 3' x 3' x 2' CONCRETE VAULT W/ ACCESS HATCH.
14. INSTALL 3" S.S. PIPE WELL AIR VENT PIPE W/ #20 MESH BUG SCREEN.
15. INSTALL 3+ PVC FLANGE ADAPTER.
16. INSTALL 3" - 90° DIP BEND.
17. INSTALL 3" DIP.
18. INSTALL PVC FLANGE ADAPTER.
19. COAT LIFT STATION AND PIPING FOR SEVERE H_2S CORROSION PER COATING SPECIFICATIONS
20. SUBGRADE PER GEOTECH REPORT

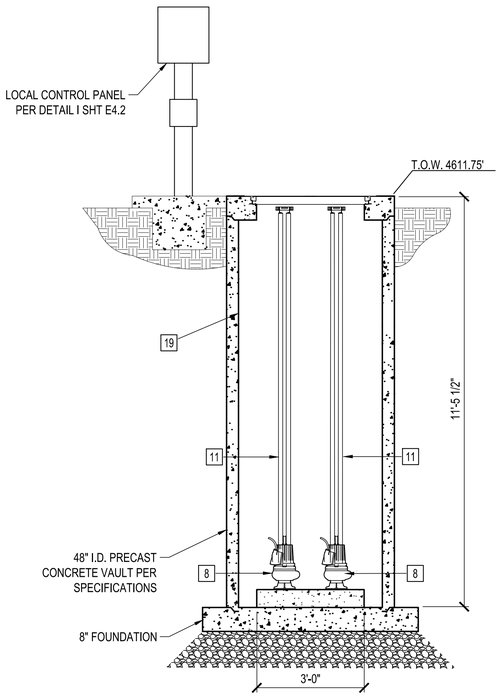

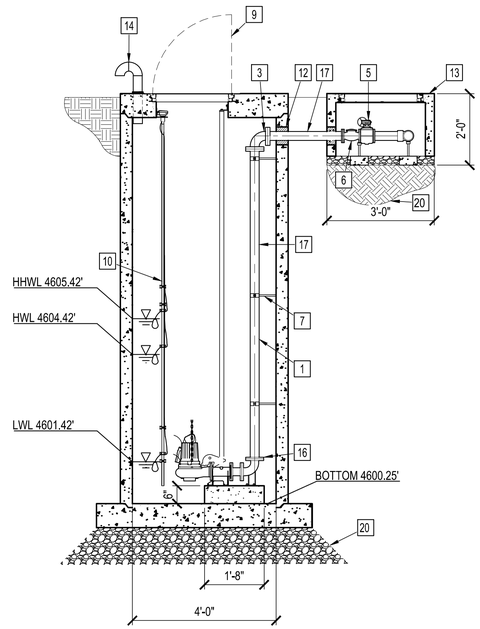

DRYING BED LIFT STATION
SECTIONS
SCALE: 1/2" = 1'-0"

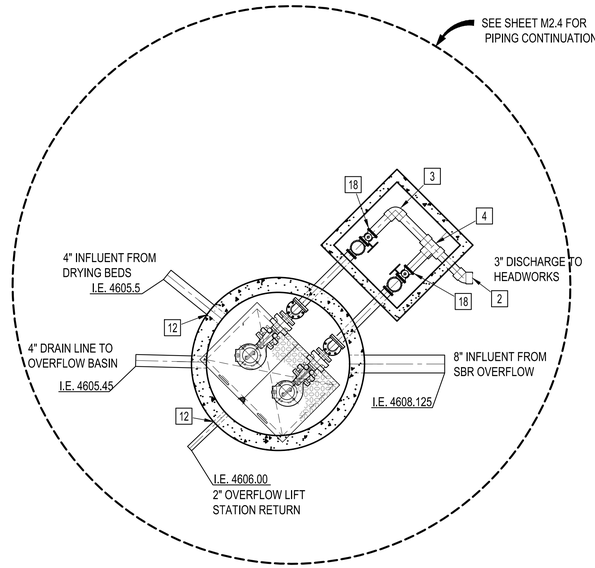

DRYING BED LIFT STATION
PLAN VIEW
SCALE: 1/2" = 1'-0"

NO	BY	DATE	REVISIONS	DATE	APP.

Registered Professional Engineer (Civil)
CERTIFICATE NO. 70097
TAYLOR B. PIERCE
Signed
ARIZONA, U.S.A.
Expires 12/31/28

PREPARED BY: PACE
DESIGNED BY: NE
DRAWN BY: DS, WW
CHECKED BY: TP
SCALE: AS NOTED
DATE: NOV 2025
JOB NO.: B614

THESE DRAWINGS ARE THE PROPERTY OF P.A.C.E. AND SHALL NOT BE REPRODUCED IN ANY MANNER NOR BE USED FOR CONSTRUCTION UNLESS STAMPED 'ISSUED FOR CONSTRUCTION'.

100% ISSUED FOR BID

TITLE: DRYING BED LIFT STATION SECTIONS

JOB: TOWN OF JEROME
WASTEWATER
TREATMENT PLANT
YAVAPAI CO. AZ

PREPARED BY:
PACE
Advanced Water Engineering
8723 E. VIA DE COMMERCIO, SUITE 1-A, SCOTTSDALE, CA 85258
P: (480) 991-3595 | www.pacewater.com
TAYLOR B. PIERCE R.C.E 70097 DATE

SHEET
M5.2
43 OF 99 SHEETS

JOB NO. B614

W:\B614\Engineering\B614-3\Sheets\B614 - M5.0 SLUDGE DRYING BEDS PLAN.dwg - Tab: M5.2 - by noddington on 11/19/25 at 3:14:09 PM

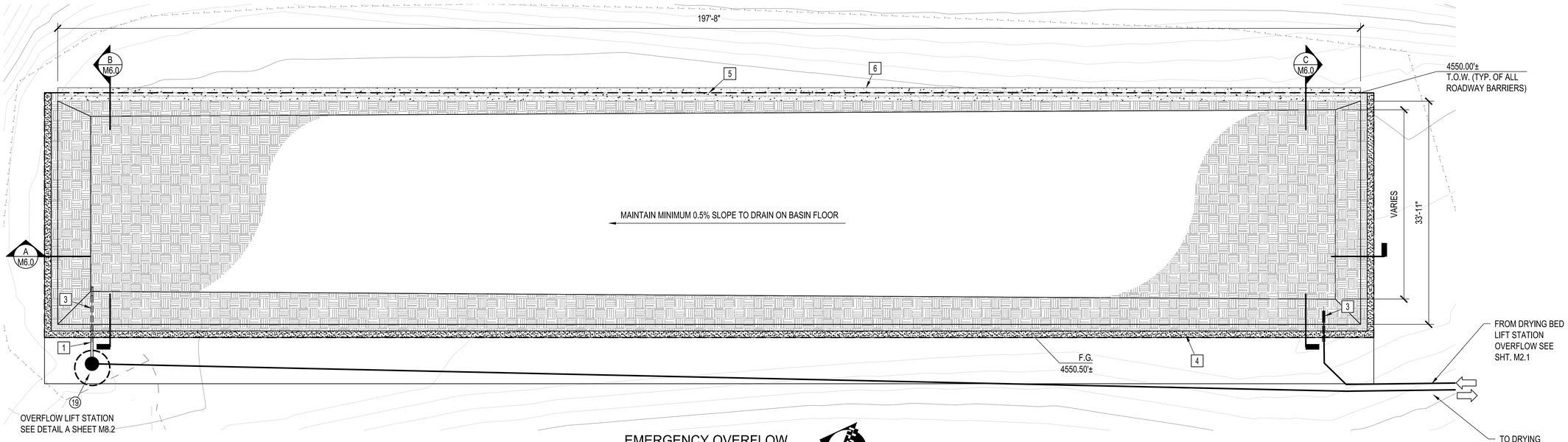

EMERGENCY OVERFLOW
BASIN PLAN VIEW
SCALE: 1/8" = 1'-0"

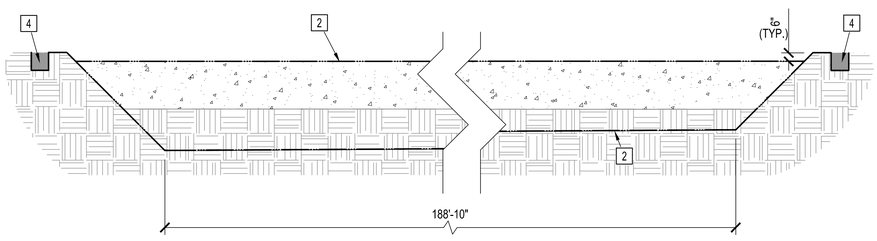

EMERGENCY OVERFLOW BASIN
SECTION - A
SCALE: 1/4" = 1'-0"

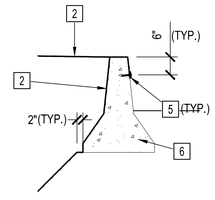

EMERGENCY OVERFLOW BASIN
DETAIL - A
SCALE: 1/2" = 1'-0"

CONSTRUCTION NOTES:

1. INSTALL 4" SDR 35 PVC PIPE.
2. INSTALL HDPE LINER PER SPECIFICATION 31 05 19.16.
3. INSTALL PIPE BOOT PER LINER MANUFACTURER RECOMMENDATIONS AND DETAIL E SHEET M8.3.
4. INSTALL ANCHOR TRENCH PER DETAIL D SHEET M8.3.
5. INSTALL HDPE LINER ANCHOR BOLT, ANCHOR TO EXISTING WALLS PER DETAIL C. SHEET M8.3.
6. PROTECT IN PLACE EXISTING ROADWAY BARRIERS.

NOTES:

1. GRADE ALL BASIN WALLS WITH 1:1 SLOPE TO BASIN FLOOR.
2. SLOPE GRADE MIN 5:1 AWAY AS NEEDED AROUND ENTIRE PERIMETER.
3. CONTRACTOR TO RELOCATE EXISTING ROADWAY BARRIERS FROM ABANDONED BASIN AS NEEDED.

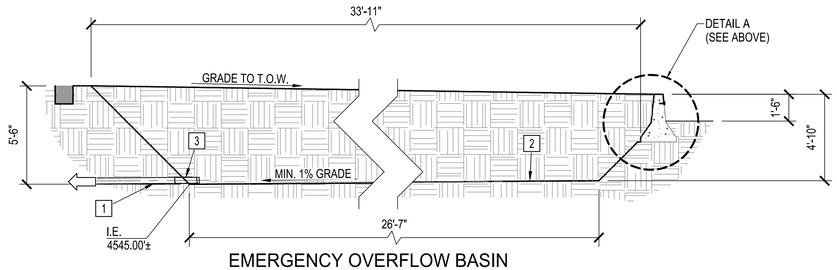

EMERGENCY OVERFLOW BASIN
SECTION - B
SCALE: 1/4" = 1'-0"

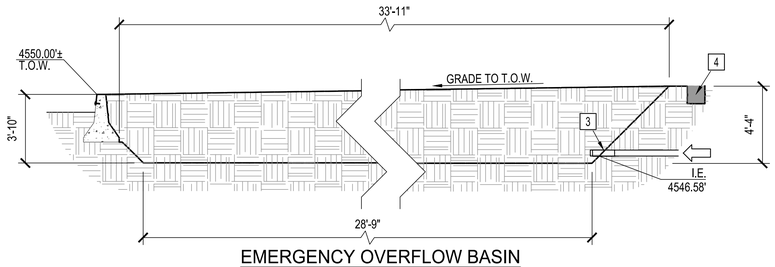

EMERGENCY OVERFLOW BASIN
SECTION - C
SCALE: 1/4" = 1'-0"

NO	BY	DATE	REVISIONS	DATE	APP.

THESE DRAWINGS ARE THE PROPERTY OF P.A.C.E. AND SHALL NOT BE REPRODUCED IN ANY MANNER NOR BE USED FOR CONSTRUCTION UNLESS STAMPED 'ISSUED FOR CONSTRUCTION'.

Registered Professional Engineer (Civil)
CERTIFICATE NO. 70097
TAYLOR B. PIERCE
Signed
ARIZONA, U.S.A.
Expires 12/31/28

PREPARED BY: PACE
DESIGNED BY: NE
DRAWN BY: DS, WW
CHECKED BY: TP
SCALE: AS NOTED
DATE: NOV 2025
JOB NO.: B614

TITLE: EMERGENCY OVERFLOW BASIN PLAN AND SECTIONS

JOB: TOWN OF JEROME WASTEWATER TREATMENT PLANT — YAVAPAI CO. AZ

100% ISSUED FOR BID

PREPARED BY: TAYLOR B. PIERCE — R.C.E 70097 — DATE

PACE
Advanced Water Engineering
8723 E. VIA DE VENTURA, SUITE A-100, SCOTTSDALE, CA 85258
P: (480) 991-3995 | www.paceaz.com

SHEET
M6.0
44 OF 99 SHEETS

JOB NO. B614

W:\B614\Engineering\B614-30sheets\B614 - M6.0 EMERGENCY OVERFLOW STORAGE PLAN.dwg - Tab: M6.0 - by reddington on 11/19/25 at 2:37:31 PM

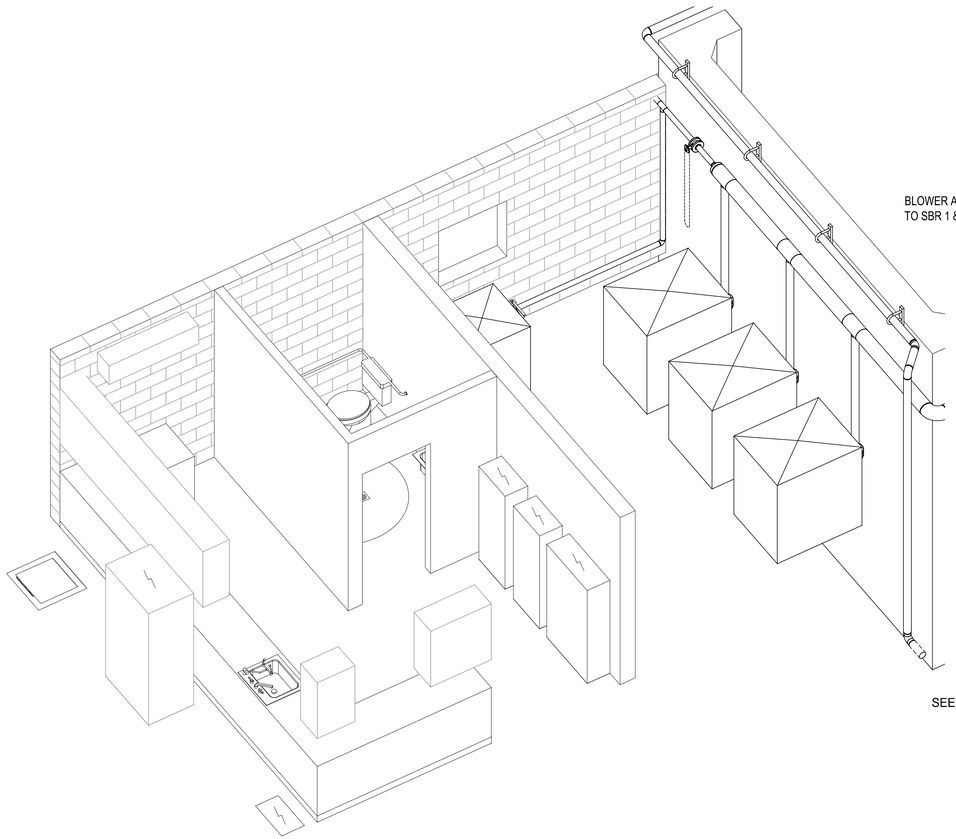

ISOMETRIC VIEW - NE
SCALE: N.T.S.

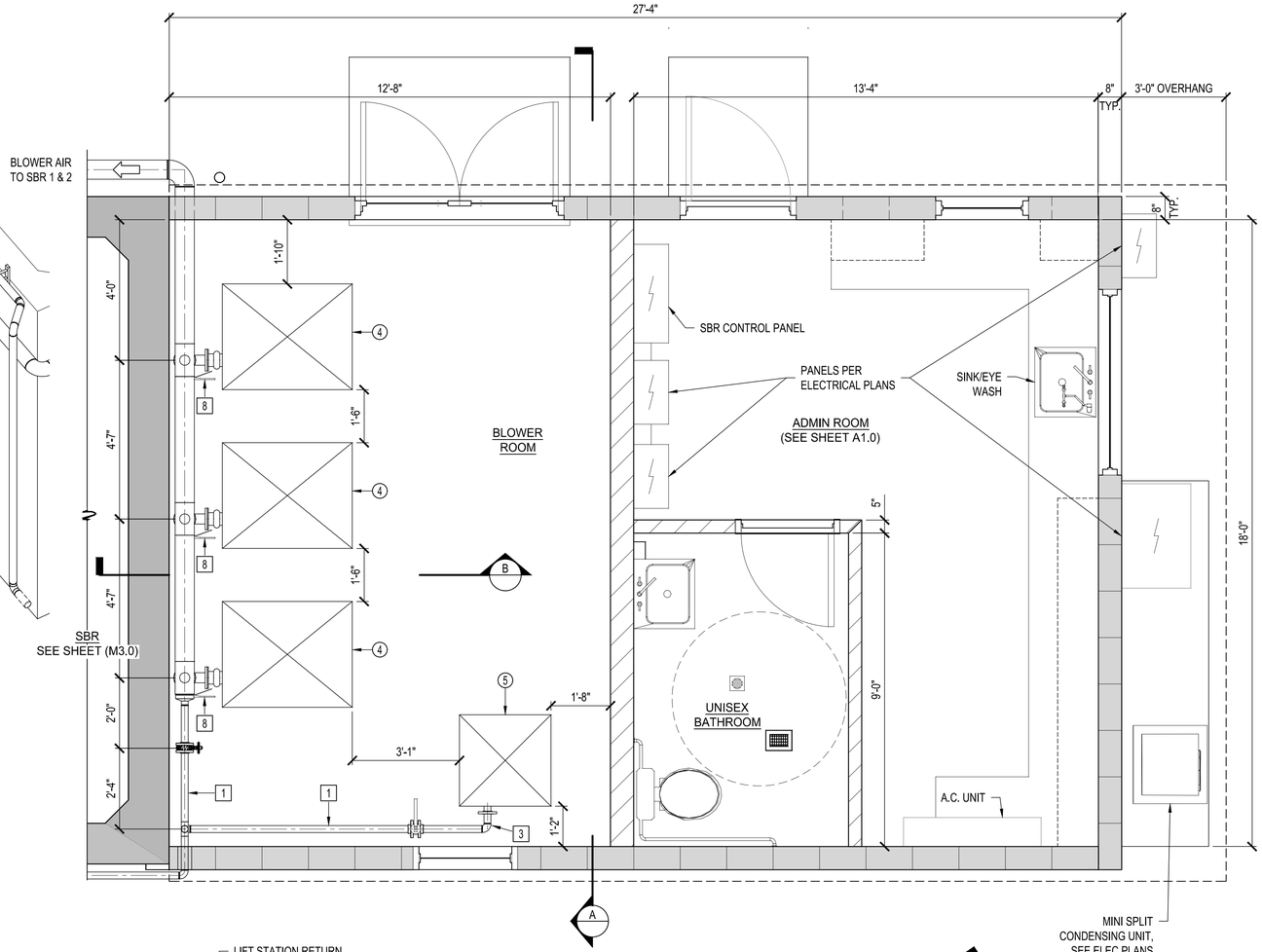

MECHANICAL PLAN - ABOVE
SCALE: 1/2" = 1'-0"

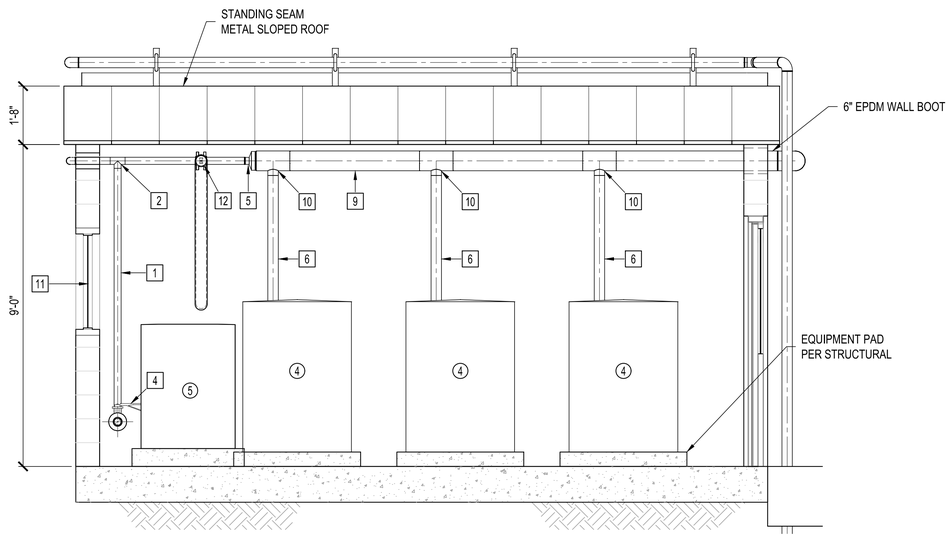

SECTION-A
SCALE: 1/2" = 1'-0"

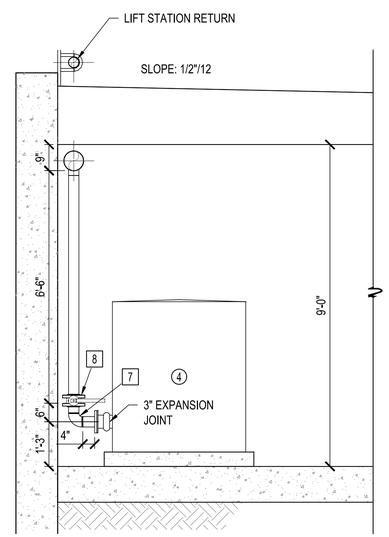

SECTION-B
SCALE: 1/2" = 1'-0"

CONSTRUCTION NOTES:

1. INSTALL 2" SCH. 10 CARBON STEEL PIPE.
2. INSTALL 2" SCH. 10 CARBON STEEL TEE.
3. INSTALL 2" - 90° SCH. 10 CARBON STEEL BEND
4. INSTALL 2" BUTTERFLY VALVE.
5. INSTALL 6"x2" SCH. 10 CARBON STEEL REDUCER.
6. INSTALL 3" SCH. 10 CARBON STEEL PIPE.
7. INSTALL 3" - 90° SCH. 10 CARBON STEEL BEND.
8. INSTALL 3" BUTTERFLY VALVE.
9. INSTALL 6" SCH. 10 CARBON STEEL PIPE.
10. INSTALL 6"x3"x6" SCH. 10 CARBON STEEL TEE.
11. INSTALL 3'x3' ACOUSTICAL LOUVER PER SPECIFICATION 08 9100.
12. INSTALL 2" BUTTERFLY VALVE WITH CHAIN WHEEL

NO	BY	DATE	REVISIONS	DATE	APP.

Registered Professional Engineer (Civil)
CERTIFICATE NO. 70097
Timothy R. Pierce
Signed
ARIZONA, U.S.A.
Expires 12/31/28

PREPARED BY: PACE
DESIGNED BY: NE
DRAWN BY: DS, WW
CHECKED BY: TP
SCALE: AS NOTED
DATE: NOV 2025
JOB NO.: B614

THESE DRAWINGS ARE THE PROPERTY OF P.A.C.E. AND SHALL NOT BE REPRODUCED IN ANY MANNER NOR BE USED FOR CONSTRUCTION UNLESS STAMPED 'ISSUED FOR CONSTRUCTION'.

TITLE: **BLOWER OPS PLAN**

JOB: TOWN OF JEROME
WASTEWATER
TREATMENT PLANT
YAVAPAI CO. AZ

100% ISSUED FOR BID

PREPARED BY: TAYLOR B. PIERCE R.C.E 70097 DATE
PACE
Advanced Water Engineering
8723 E. Vía de Commercio, Suite 2-104, SCOTTSDALE, CA 85258
P: (408) 991-3595 | www.pacewater.com

SHEET
M7.0
45 OF 99 SHEETS

JOB NO. B614

W:\B614-Engineering\B614-03\sheets\B614 - M7.0 BLOWER OPS PLAN AND SECTIONS.dwg - Tab: M7.0 - by reddington on 11/21/25 at 12:21:09 PM

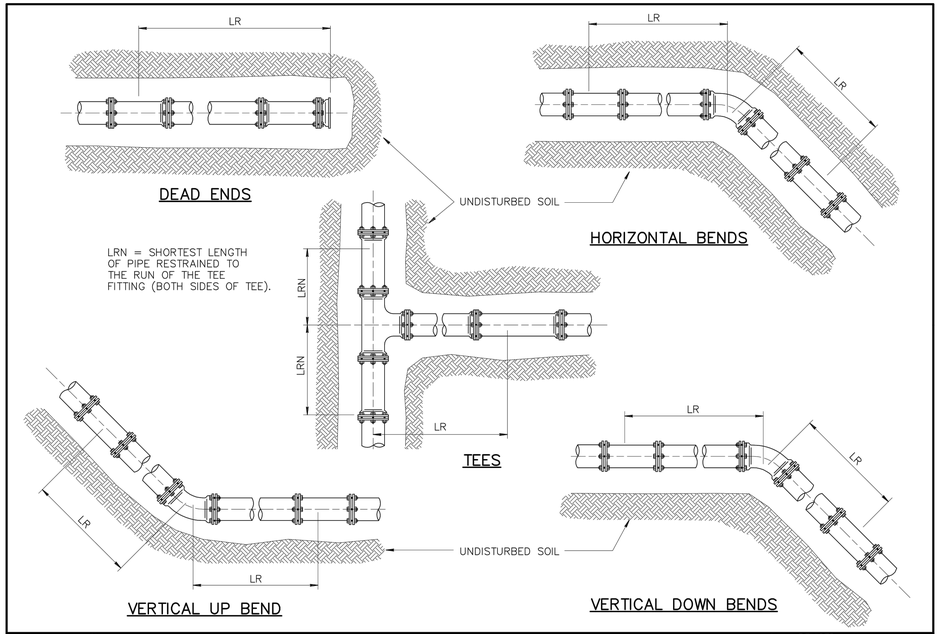

DETAIL NO.	STANDARD DETAIL	JOINT RESTRAINT FOR DUCTILE IRON, POLYETHYLENE WRAPPED DUCTILE IRON AND PVC WATER PIPES	REVISED	DETAIL NO.
303–1	MARICOPA ASSOCIATION of GOVERNMENTS ENGLISH		01–01–2019	303–1

M.A.G. STANDARD DETAIL #303-1

N.T.S. | A

RESTRAINED LENGTHS, LR, FOR DUCTILE IRON PIPE

NOMINAL PIPE SIZE INCHES	HORIZONTAL BENDS			TEES		VERTICAL OFFSETS						DEAD ENDS
						90° BEND FITTINGS		45° BEND FITTINGS		22–1/2° BEND FITTINGS		
	90°	45°	22–1/2°	LRN=0'	LRN=10'	DOWN BEND	UP BEND	DOWN BEND	UP BEND	DOWN BEND	UP BEND	
4	18	7	4	30	8	31	18	13	7	6	3	31
6	25	10	5	43	20	44	25	18	10	9	5	44
8	32	13	6	56	34	58	32	24	13	11	6	58
10	38	16	8	68	45	69	38	29	16	14	8	69
12	45	19	9	80	57	81	45	34	19	16	9	81
14	51	21	10	91	68	92	51	38	21	18	10	92
16	57	24	11	103	79	104	57	43	24	21	11	104
18	62	26	12	113	90	115	62	48	26	23	12	115
20	68	28	14	125	100	126	68	52	28	25	14	126
24	79	33	16	145	121	147	79	61	33	29	16	147

RESTRAINED LENGTHS, LR, FOR DUCTILE IRON WITH POLYETHYLENE WRAP AND PVC PIPE

NOMINAL PIPE SIZE INCHES	HORIZONTAL BENDS			TEES		VERTICAL OFFSETS						DEAD ENDS
						90° BEND FITTINGS		45° BEND FITTINGS		22–1/2° BEND FITTINGS		
	90°	45°	22–1/2°	LRN=0'	LRN=10'	DOWN BEND	UP BEND	DOWN BEND	UP BEND	DOWN BEND	UP BEND	
4	26	11	5	69	18	72	26	30	11	14	5	72
6	36	15	7	99	47	102	36	42	15	20	7	102
8	47	19	9	130	78	133	47	55	19	26	9	133
10	56	23	11	157	103	159	56	66	23	32	11	159
12	65	27	13	185	131	187	65	77	27	37	13	187
14	74	31	15	211	156	214	74	89	31	42	15	214
16	82	34	16	238	183	241	82	100	34	48	16	241
18	90	37	18	263	207	266	90	110	38	53	18	266
20	98	41	20	289	233	292	98	121	41	58	20	292
24	113	47	22	337	280	340	113	141	47	68	22	340

NOTES:

1. ALL JOINTS WITHIN THE SPECIFIED LENGTH LR MUST BE RESTRAINED. ALL LENGTHS ARE GIVEN IN FEET.
2. THE MAXIMUM TEST PRESSURE SHALL NOT EXCEED 200 PSI
3. THE MINIMUM DEPTH OF BURY SHALL BE 3' TO TOP OF PIPE.
4. RESTRAINED LENGTHS MAY BE REDUCED WHEN SUPPORTED BY ENGINEERING CALCULATIONS.

DETAIL NO.	STANDARD DETAIL	JOINT RESTRAINT FOR DUCTILE IRON, POLYETHYLENE WRAPPED DUCTILE IRON AND PVC WATER PIPES	REVISED	DETAIL NO.
303–2	MARICOPA ASSOCIATION of GOVERNMENTS ENGLISH		01–01–2019	303–2

M.A.G. STANDARD DETAIL #303-2

N.T.S. | B

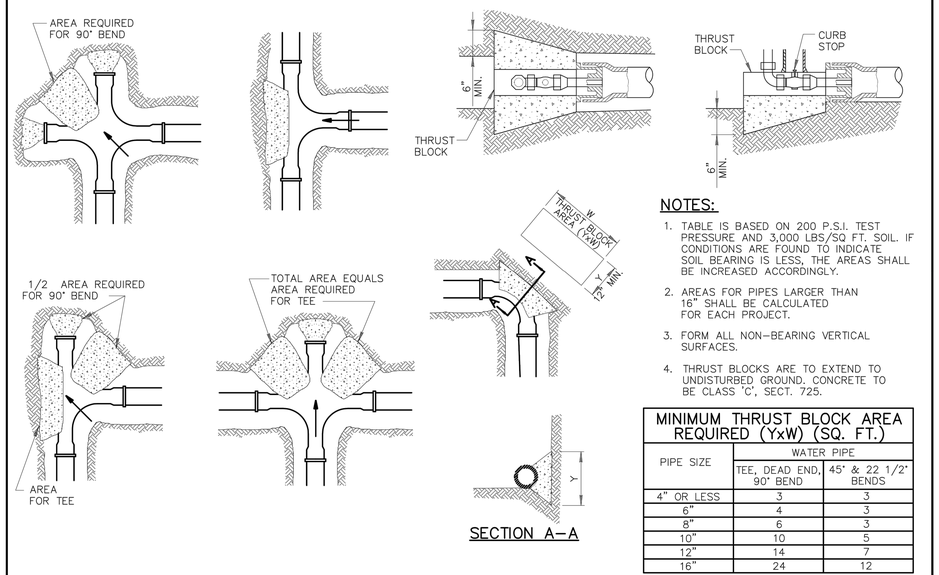

NOTES:

1. TABLE IS BASED ON 200 P.S.I. TEST PRESSURE AND 3,000 LBS/SQ FT. SOIL. IF CONDITIONS ARE FOUND TO INDICATE SOIL BEARING IS LESS, THE AREAS SHALL BE INCREASED ACCORDINGLY.
2. AREAS FOR PIPES LARGER THAN 16" SHALL BE CALCULATED FOR EACH PROJECT.
3. FORM ALL NON–BEARING VERTICAL SURFACES.
4. THRUST BLOCKS ARE TO EXTEND TO UNDISTURBED GROUND. CONCRETE TO BE CLASS 'C', SECT. 725.

MINIMUM THRUST BLOCK AREA REQUIRED (YxW) (SQ. FT.)		
PIPE SIZE	WATER PIPE	
	TEE, DEAD END, 90° BEND	45° & 22 1/2° BENDS
4" OR LESS	3	3
6"	4	3
8"	6	3
10"	10	5
12"	14	7
16"	24	12

DETAIL NO.	STANDARD DETAIL	THRUST BLOCKS FOR WATER LINES	REVISED	DETAIL NO.
380	MARICOPA ASSOCIATION of GOVERNMENTS ENGLISH		01–01–1998	380

M.A.G. STANDARD DETAIL #380

N.T.S. | C

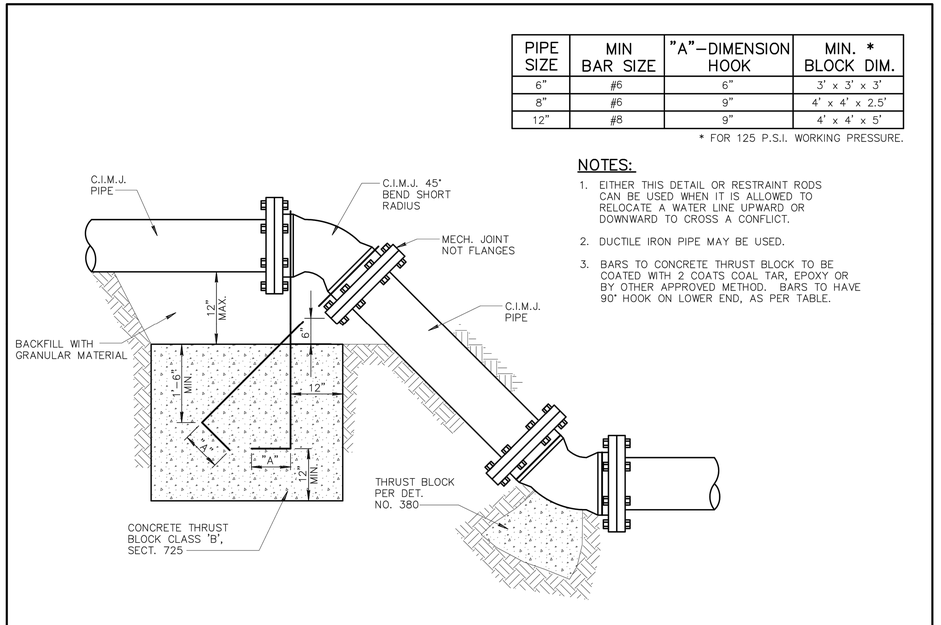

PIPE SIZE	MIN BAR SIZE	"A"–DIMENSION HOOK	MIN. * BLOCK DIM.
6"	#6	6"	3' x 3' x 3'
8"	#6	9"	4' x 4' x 2.5'
12"	#8	9"	4' x 4' x 5'

* FOR 125 P.S.I. WORKING PRESSURE.

NOTES:

1. EITHER THIS DETAIL OR RESTRAINT RODS CAN BE USED WHEN IT IS ALLOWED TO RELOCATE A WATER LINE UPWARD OR DOWNWARD TO CROSS A CONFLICT.
2. DUCTILE IRON PIPE MAY BE USED.
3. BARS TO CONCRETE THRUST BLOCK TO BE COATED WITH 2 COATS COAL TAR, EPOXY OR BY OTHER APPROVED METHOD. BARS TO HAVE 90° HOOK ON LOWER END, AS PER TABLE.

DETAIL NO.	STANDARD DETAIL	ANCHOR BLOCKS FOR VERTICAL BENDS	REVISED	DETAIL NO.
381	MARICOPA ASSOCIATION of GOVERNMENTS ENGLISH		01–01–1998	381

M.A.G. STANDARD DETAIL #381

N.T.S. | D

NO	BY	DATE	REVISIONS	DATE	APP.

Registered Professional Engineer (Civil) CERTIFICATE NO. 70097 Timothy B. Pace Signed ARIZONA, U.S.A. Expires 12/31/28

PREPARED BY:	PACE
DESIGNED BY:	NE
DRAWN BY:	DS, WW
CHECKED BY:	TP
SCALE:	AS NOTED
DATE	NOV 2025
JOB NO.	B614

THESE DRAWINGS ARE THE PROPERTY OF P.A.C.E. AND SHALL NOT BE REPRODUCED IN ANY MANNER NOR BE USED FOR CONSTRUCTION UNLESS STAMPED 'ISSUED FOR CONSTRUCTION'.

MECHANICAL DETAILS I

TITLE

100% ISSUED FOR BID

JOB TOWN OF JEROME WASTEWATER TREATMENT PLANT YAVAPAI CO. AZ

PREPARED BY: PACE
Advanced Water Engineering
8723 E. Via de Ventura, Suite A-100, SCOTTSDALE, CA 85258
P: (480) 991-3985 | www.pacewater.com
TAYLOR B. PIERCE R.C.E 70097 DATE

SHEET M8.0 46 OF 99 SHEETS

JOB NO. B614

W:\B614\Engineering\B614-30sheet\B614 - M8.0 MECHANICAL DETAILS.dwg - Tab: M8.0 - by maddington on 02/23/26 at 12:41:49 PM

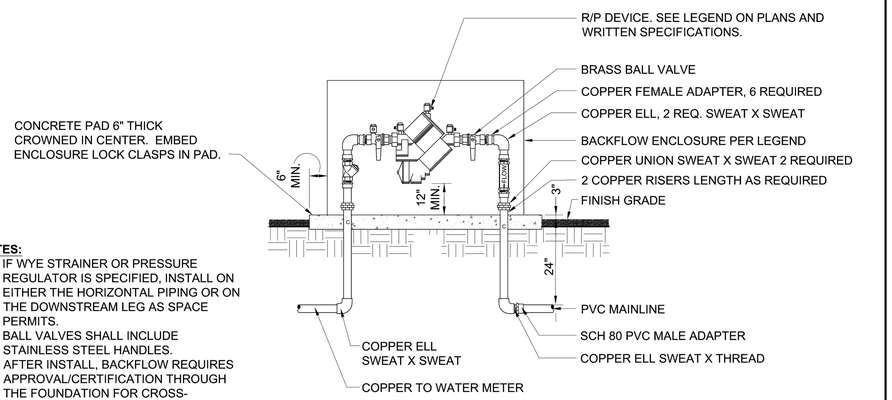

NOTES:

1. IF WYE STRAINER OR PRESSURE REGULATOR IS SPECIFIED, INSTALL ON EITHER THE HORIZONTAL PIPING OR ON THE DOWNSTREAM LEG AS SPACE PERMITS.
2. BALL VALVES SHALL INCLUDE STAINLESS STEEL HANDLES.
3. AFTER INSTALL, BACKFLOW REQUIRES APPROVAL/CERTIFICATION THROUGH THE FOUNDATION FOR CROSS-CONNECTION CONTROL AND HYDRAULIC RESEARCH (USC), OR A THIRD-PARTY CERTIFYING ENTITY THAT IS UNRELATED TO THE PRODUCT'S MANUFACTURER OR VENDOR, THAT IS APPROVED BY THE ARIZONA DEPARTMENT OF ENVIRONMENTAL QUALITY.

DETAIL NO.		STANDARD DETAIL		REVISED	DETAIL NO.
611-1	MARICOPA ASSOCIATION of GOVERNMENTS	ENGLISH	BACKFLOW PREVENTER ASSEMBLY (2" DIA. & SMALLER)	01-01-2023	611-1

M.A.G. STANDARD DETAIL #611-1

N.T.S. | A

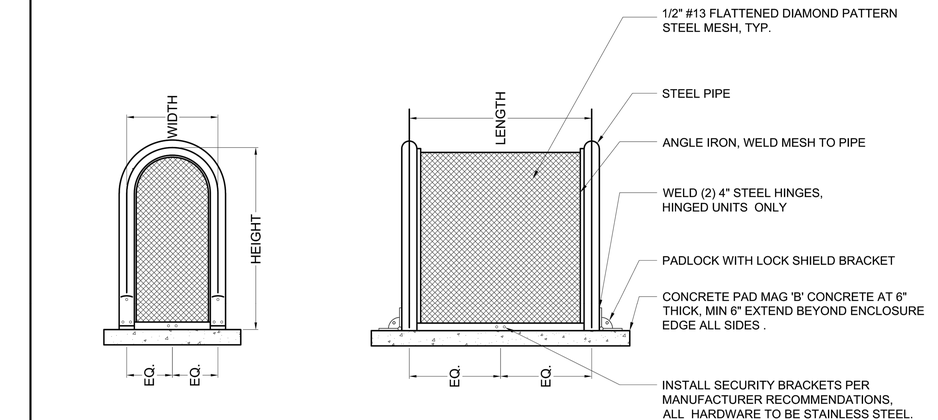

NOTES:

1. ENCLOSURE SHALL BE POWDER COATED BY MANUFACTURER.
2. SEE LEGEND FOR REQUIRED SIZE & COLOR.
3. CONTRACTOR SHALL SUPPLY CONCRETE PAD.

CENTERLINE DIMENSIONS	TYPE
12"W X 18"H X 12"L	LIFT OFF UNIT
12"W X 24"H X 24"L	LIFT OFF UNIT
12"W X 24"H X 32"L	LIFT OFF UNIT
12"W X 24"H X 42"L	HINGED UNIT
12"W X 30"H X 42"L	HINGED UNIT
18"W X 30"H X 48"L	HINGED UNIT

DETAIL NO.		STANDARD DETAIL		REVISED	DETAIL NO.
611-3	MARICOPA ASSOCIATION of GOVERNMENTS	ENGLISH	ENCLOSURE CAGE FOR BACKFLOW PREVENTER	01-01-2023	611-3

M.A.G. STANDARD DETAIL #611-3

N.T.S. | B

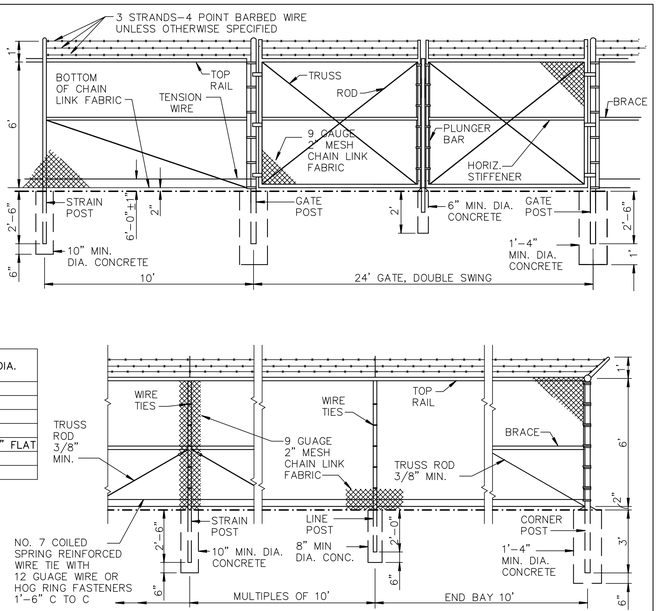

NOTES

1. ALL CONCRETE SHALL BE CLASS 'C' PER SECT. 725.
2. FITTINGS NOT SPECIFICALLY DETAILED SHALL BE HEAVY DUTY DESIGN.
3. STRAIN POSTS SHALL BE SPACED AT 500' MAXIMUM SPACING.
4. BOTH CORNER AND STRAIN POSTS SHALL HAVE STRAIN PANELS.
5. ALL POSTS SHALL BE CAPPED.
6. MEMBER SIZES SHALL BE THE FOLLOWING:

MEMBER	AISC SIZE	OUTSIDE DIA.
CORNER POST	2-1/2"	2.875"
LINE POST	1-1/2"	1.900"
STRAIN POST	1-1/2"	1.900"
BRACE	1-1/4"	1.666"
STRETCH BAR	3/16"x3/4" FLAT	3/16"x3/4" FLAT
GATE POST	3-1/2"	4.000"
TOP RAIL	1-1/4"	1.666"

7. CONSTRUCTION AND MATERIALS SHALL CONFORM TO SECT. 420 AND 772, RESPECTIVELY. SEE TABLE 772-1 FOR WEIGHTS OF MEMBERS.

DETAIL NO.		STANDARD DETAIL		REVISED	DETAIL NO.
160	MARICOPA ASSOCIATION of GOVERNMENTS	ENGLISH	6' CHAIN LINK FENCE AND GATE	01-01-2013	160

M.A.G. STANDARD DETAIL #160

N.T.S. | C

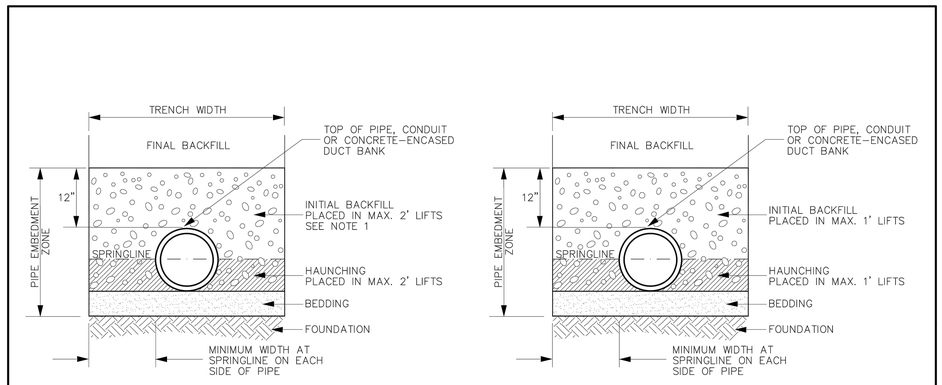

TRENCH-CROSS SECTION DETAIL
RIGID PIPE

TRENCH-CROSS SECTION DETAIL
FLEXIBLE PIPE

NOTES:

1. BEDDING, HAUNCHING AND INITIAL BACKFILL MATERIAL SHALL BE ABC PER SECTION 702. SEE SECTION 601 FOR ALTERNATIVE MATERIALS TO BE USED WITH AGENCY APPROVAL INCLUDING MAXIMUM 1-1/2" NATIVE MATERIAL FOR CONCRETE PIPE INITIAL BACKFILL.
2. SEE SECTION 601 FOR ADDITIONAL TRENCH WIDTH, EXCAVATION, BACKFILLING AND COMPACTION REQUIREMENTS.
3. SEE SECTION 601 FOR PIPE MATERIALS CONSIDERED AS RIGID OR FLEXIBLE.

DETAIL NO.		STANDARD DETAIL		REVISED	DETAIL NO.
200-3	MARICOPA ASSOCIATION of GOVERNMENTS	ENGLISH	TRENCH BACKFILL AND SURFACE REPLACEMENT	01-01-2023	200-3

M.A.G. STANDARD DETAIL #200-3

N.T.S. | D

NO	BY	DATE	REVISIONS	DATE	APP.

Registered Professional Engineer (Civil) CERTIFICATE NO. 70097 TAYLOR B. PIERCE Signed ARIZONA, U.S.A. Expires 12/31/28

PREPARED BY: PACE
DESIGNED BY: NE
DRAWN BY: DS, WW
CHECKED BY: TP
SCALE: AS NOTED
DATE: NOV 2025
JOB NO.: B614

MECHANICAL DETAILS II

TITLE

TOWN OF JEROME
WASTEWATER
TREATMENT PLANT
YAVAPAI CO. AZ

JOB

100% ISSUED FOR BID

PREPARED BY: TAYLOR B. PIERCE R.C.E 70097 DATE

PACE
Advanced Water Engineering
8723 E. Via de Ventura, Suite F-110, SCOTTSDALE, CA 85258
P. (480) 991-3595 | www.pacewater.com

SHEET
M8.1
47 OF 99 SHEETS

JOB NO. B614

THESE DRAWINGS ARE THE PROPERTY OF P.A.C.E. AND SHALL NOT BE REPRODUCED IN ANY MANNER NOR BE USED FOR CONSTRUCTION UNLESS STAMPED 'ISSUED FOR CONSTRUCTION'.

W:\B614\Engineering\B614-30\sheets\B614 - M8.0 MECHANICAL DETAILS.dwg - Tab: M8.1 - by maddingtondon on 02/23/26 at 12:41:49 PM

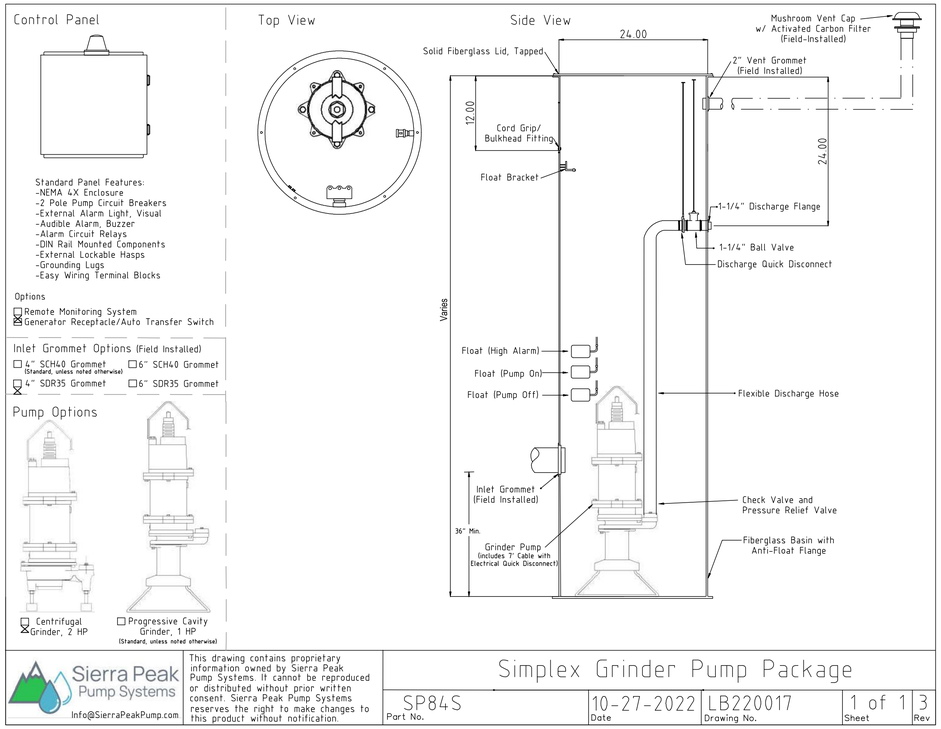

OVERFLOW LIFT STATION / OR EQUAL

N.T.S. | A

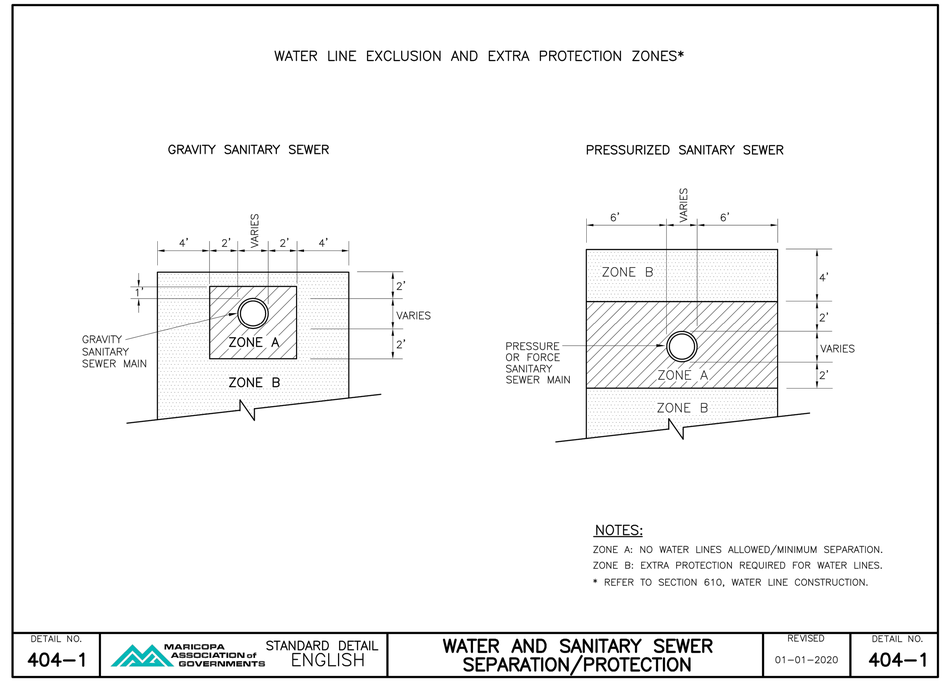

M.A.G. STANDARD DETAIL #404-1

N.T.S. | B

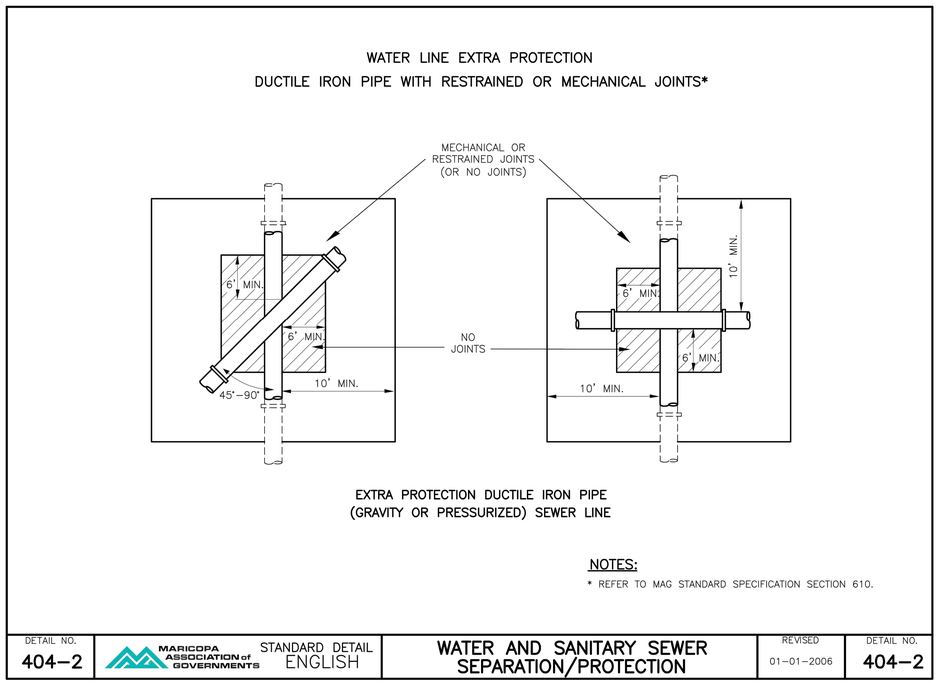

M.A.G. STANDARD DETAIL #404-2

N.T.S. | C

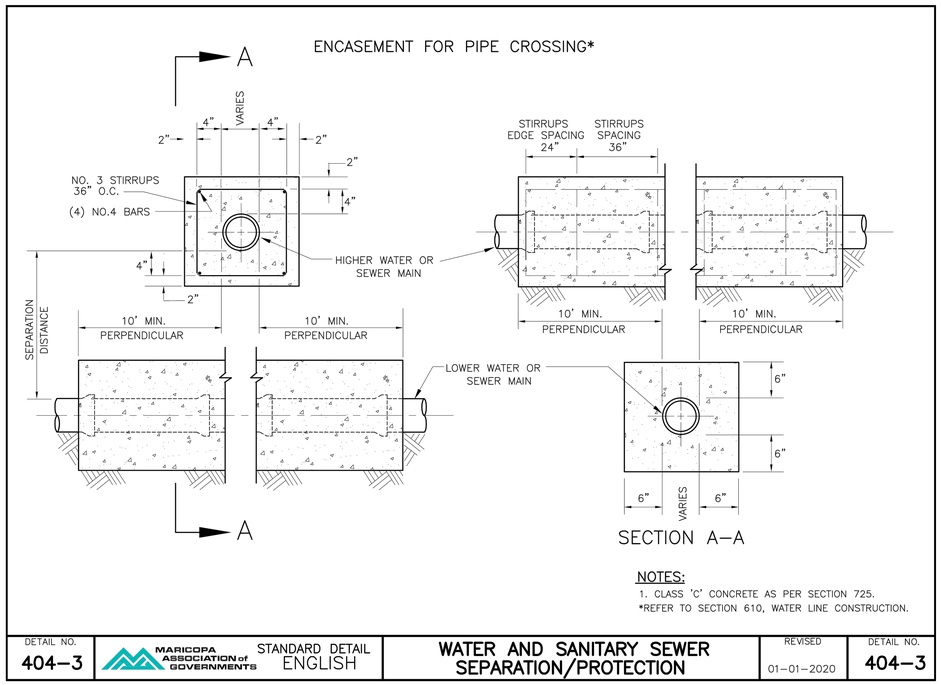

M.A.G. STANDARD DETAIL #404-3

N.T.S. | D

NO	BY	DATE	REVISIONS	DATE	APP.

Registered Professional Engineer (Civil) CERTIFICATE NO. 70097 Timothy B. Pierce Signed 11/28/25 ARIZONA, U.S.A. Expires 12/31/28

PREPARED BY: PACE
DESIGNED BY: NE
DRAWN BY: DS, WW
CHECKED BY: TP
SCALE: AS NOTED
DATE: NOV 2025
JOB NO.: B614

THESE DRAWINGS ARE THE PROPERTY OF P.A.C.E. AND SHALL NOT BE REPRODUCED IN ANY MANNER NOR BE USED FOR CONSTRUCTION UNLESS STAMPED 'ISSUED FOR CONSTRUCTION'.

TITLE: MECHANICAL DETAILS III

JOB: TOWN OF JEROME WASTEWATER TREATMENT PLANT YAVAPAI CO. AZ

100% ISSUED FOR BID

PREPARED BY: PACE
Advanced Water Engineering
8723 E. Via de Commercio, Suite 110, SCOTTSDALE, CA 85258
P: (480) 391-3595 | www.pacewater.com
TAYLOR B. PIERCE R.C.E 70097 DATE

SHEET M8.2
48 OF 99 SHEETS

JOB NO. B614

W:\B614\Engineering\B614-30sheets\B614 - M8.0 MECHANICAL DETAILS.dwg - Tab: M8.2 - by naddington on 02/23/26 at 12:41:49 PM

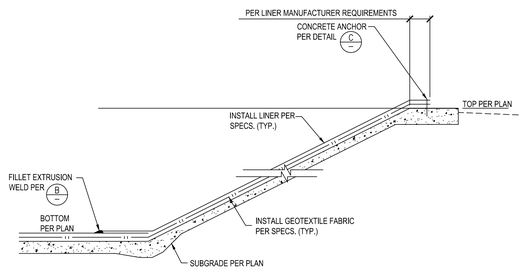

TYPICAL LINER SECTION 1"=1'-0" A

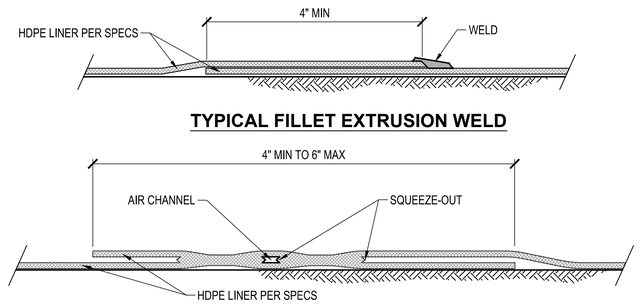

WELD DETAIL N.T.S. B

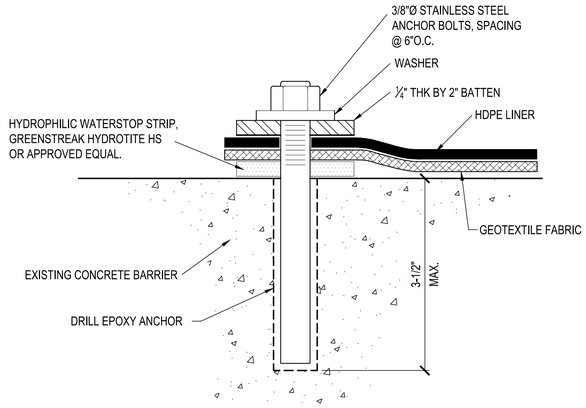

CONCRETE ANCHOR 1"=1'-0" C

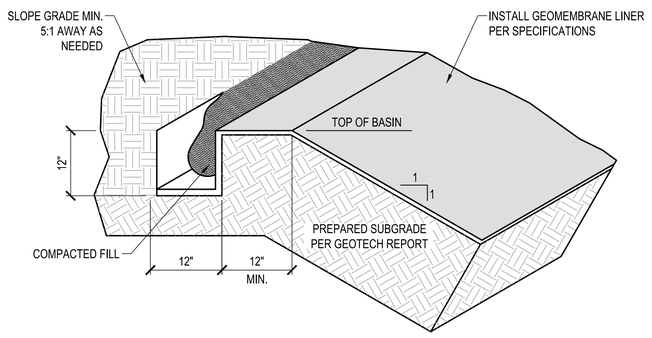

ANCHOR TRENCH N.T.S. D

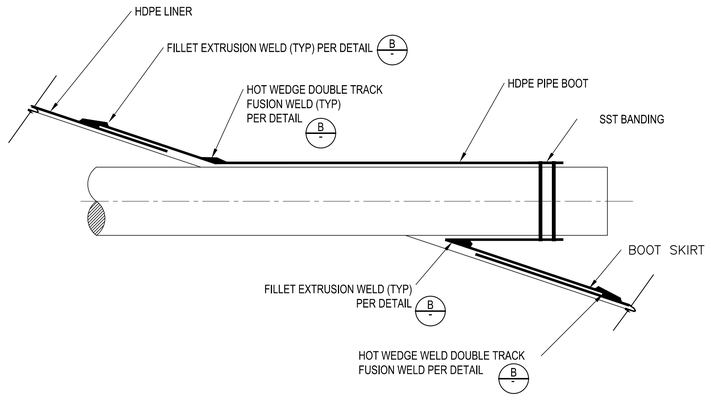

PIPE BOOT 1" = 1'-0" E

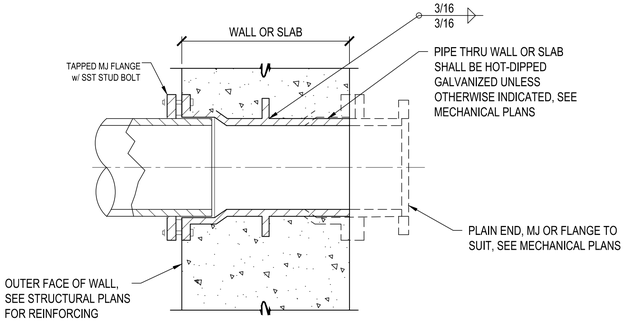

NOTE:
COAT PIPE WITH SPECIFIED PAINT SYSTEM PRIOR TO CONCRETE PLACEMENT

MECHANICAL JOINT WALL SLEEVE F

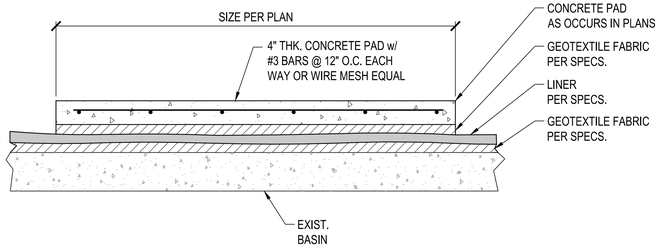

CONCRETE PAD OVER LINER 1"=1'-0" G

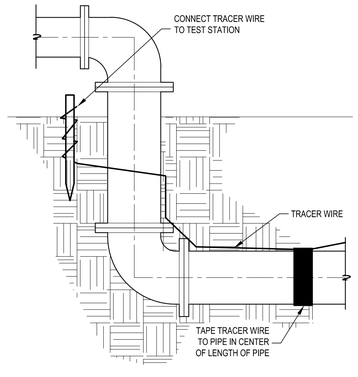

TRACER WIRE N.T.S. H

CONSTRUCTION NOTES

1. INSTALL CONCRETE COLLAR, CONTRACTOR SHALL CONTAIN A MIN. OF 6 1/2 SACKS OF CEMENT PER CUBIC YARD & ATTAIN A COMPRESSIVE STRENGTH OF 4,500 P.S.I. AFTER 28 DAYS IN ACCORDANCE W/ A.S.T.M. C39/C39M-99
2. INSTALL 6" SDR-35 P.V.C. PIPE & ELBOW FOR HEADER PIPE CLEANOUT. INSTALL 4" SDR-35 P.V.C. PIPE FOR PERFORATED PIPELINE CLEANOUT

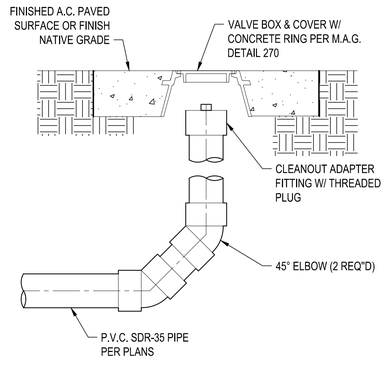

NOTE:
CLEANOUT RING & COVER SHALL BE RAISED TO FINISH GRADE & SUPPORT COLLAR INSTALLED AFTER PAVING OR FINISH GRADING HAS BEEN COMPLETED. CONTRACTOR SHALL COMPACT THE AREA UNDER CONCRETE COLLAR TO THE SATISFACTION OF THE ENGINEER BEFORE PLACING CONCRETE.

CLEANOUT N.T.S. I

100% ISSUED FOR BID

NO	BY	DATE	REVISIONS	DATE	APP.

THESE DRAWINGS ARE THE PROPERTY OF P.A.C.E. AND SHALL NOT BE REPRODUCED IN ANY MANNER NOR BE USED FOR CONSTRUCTION UNLESS STAMPED 'ISSUED FOR CONSTRUCTION'.

Registered Professional Engineer (Civil) CERTIFICATE NO. 70097 Timothy R. Pierce Signed ARIZONA, U.S.A. Expires 12/31/28

PREPARED BY:	PACE
DESIGNED BY:	NE
DRAWN BY:	DS, WW
CHECKED BY:	TP
SCALE:	AS NOTED
DATE	NOV 2025
JOB NO.	B614

TITLE
MECHANICAL DETAILS IV

JOB
TOWN OF JEROME
WASTEWATER
TREATMENT PLANT
YAVAPAI CO. AZ

PREPARED BY:
PACE
Advanced Water Engineering
8723 E. Via de Commercio, Suite 2, SCOTTSDALE, CA 85258
P: (480) 991-3995 | www.paceaz.com
TAYLOR B. PIERCE R.C.E 70097 DATE

SHEET
M8.3
49 OF 99 SHEETS

JOB NO. B614

W:\B614\Engineering\B614-30\sheets\B614 - M8.0 MECHANICAL DETAILS.dwg - Tab: M8.3 - by noddington on 02/23/26 at 12:41:49 PM

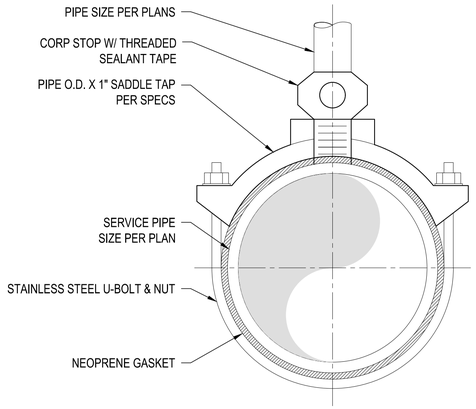

SADDLE TAP

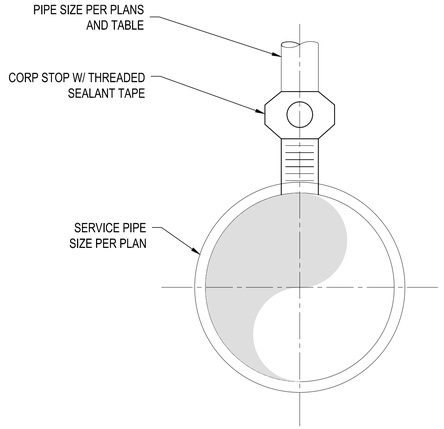

DIRECT TAP

SIZE (in.)	PRESSURE CLASS				
	150	200	250	300	350
	MAXIMUM RECOMMENDED DIRECT TAP SIZE (inch)				
3	-	-	-	-	3/4
4	-	-	-	-	3/4
6	-	-	-	-	1
8	-	-	-	-	1
10	-	-	-	-	1
12	-	-	-	-	1 1/4
14	-	-	1 1/4	1 1/2	1 1/2
16	-	-	1 1/2	2	2
18	-	-	2	2	2
20	-	-	2	2	2
24	-	2	2	2	2

PIPE TAP

N.T.S. **A**

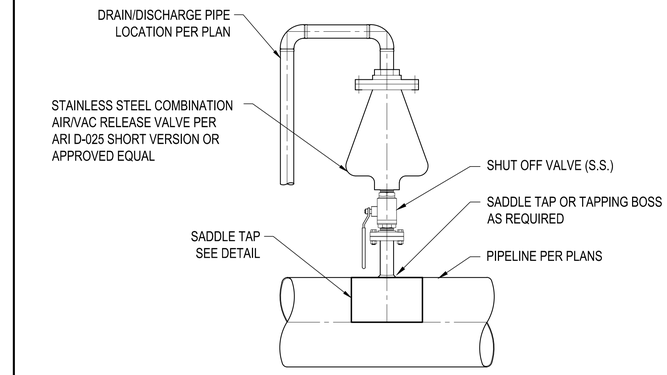

AIR/VAC RELEASE VALVE

N.T.S. **B**

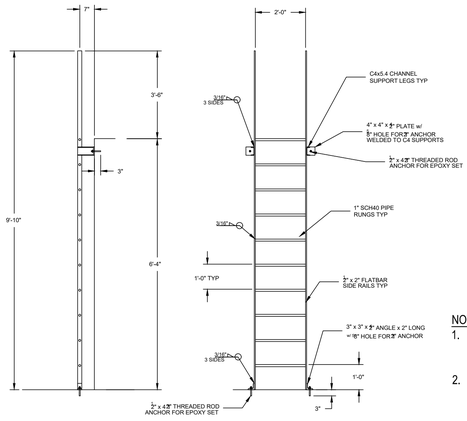

NOTES:
1. ALL MATERIALS SHALL BE CARBON STEEL.
2. ALL MATERIALS TO BE SHOP PRIMED W/ CARBOLINE 150 AFTER FABRICATION.

SHIP LADDER

N.T.S. **C**

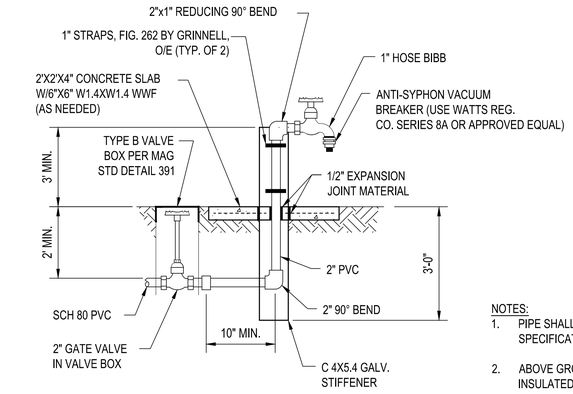

NOTES:
1. PIPE SHALL BE COLOR-CODED PER SPECIFICATIONS
2. ABOVE GROUND PIPING SHALL BE INSULATED PER SPECIFICATIONS. EXTEND INSULATION TO 12" BELOW GROUND.

HOSE BIB

N.T.S. **D**

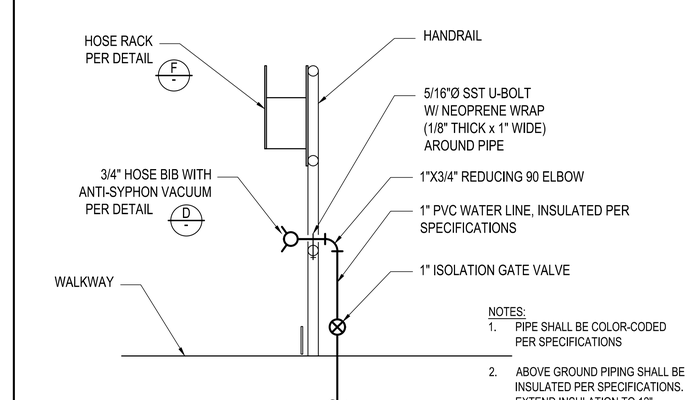

NOTES:
1. PIPE SHALL BE COLOR-CODED PER SPECIFICATIONS
2. ABOVE GROUND PIPING SHALL BE INSULATED PER SPECIFICATIONS. EXTEND INSULATION TO 12" BELOW GROUND.

RAIL MOUNTED HOSE VALVE

N.T.S. **E**

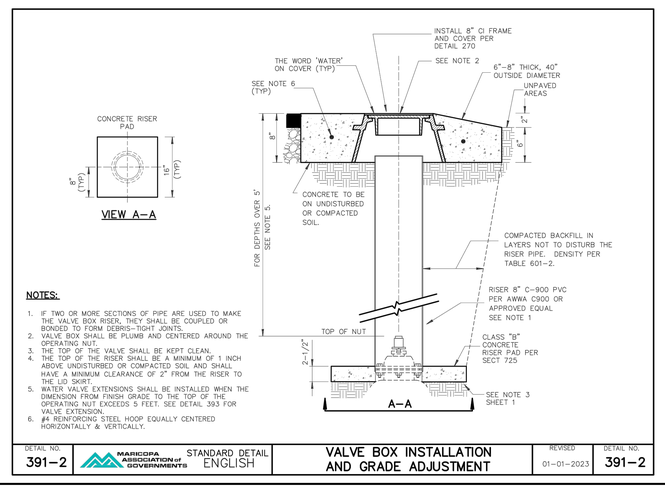

NOTES:
1. IF TWO OR MORE SECTIONS OF PIPE ARE USED TO MAKE THE VALVE BOX RISER, THEY SHALL BE COUPLED OR BONDED TO FORM DEBRIS-TIGHT JOINTS.
2. VALVE BOX SHALL BE PLUMB AND CENTERED AROUND THE OPERATING NUT.
3. THE TOP OF THE VALVE SHALL BE KEPT CLEAN.
4. THE TOP OF THE RISER SHALL BE A MINIMUM OF 1 INCH ABOVE UNDISTURBED OR COMPACTED SOIL AND SHALL HAVE A MINIMUM CLEARANCE OF 2" FROM THE RISER TO THE LID SKIRT.
5. WATER VALVE EXTENSIONS SHALL BE INSTALLED WHEN THE DIMENSION FROM FINISH GRADE TO THE TOP OF THE OPERATING NUT EXCEEDS 5 FEET. SEE DETAIL 393 FOR VALVE EXTENSION.
6. #4 REINFORCING STEEL HOOP EQUALLY CENTERED HORIZONTALLY & VERTICALLY.

DETAIL NO.		STANDARD DETAIL		REVISED	DETAIL NO.
391–2	MARICOPA ASSOCIATION of GOVERNMENTS	ENGLISH	VALVE BOX INSTALLATION AND GRADE ADJUSTMENT	01–01–2023	391–2

VALVE BOX

N.T.S. **F**

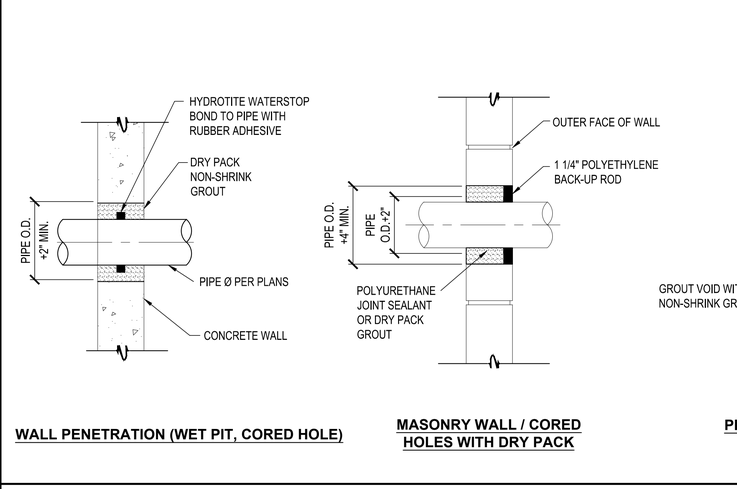

WALL PENETRATION (WET PIT, CORED HOLE)

MASONRY WALL / CORED HOLES WITH DRY PACK

PIPE SLEEVE W/ MODULAR SEAL

CORED HOLE W/ MODULAR SEAL

TABLE 1:

CORED HOLES	
PIPE SIZE NOMINAL	HOLE I.D.
1"	3"
1½"	3 1/2"
2"	4"
2½"	4"
3"	5"
4"	6"
5"	8"
6"	10"
8"	12"
10"	14"
12"	16"
14"	18"
16"	20"
18"	22"
20"	24"

PIPE PENETRATION DETAIL

N.T.S. **G**

NO	BY	DATE	REVISIONS	DATE	APP.

Registered Professional Engineer (Civil) CERTIFICATE NO. 70097 Nicholas E. Pierce Signed ARIZONA, U.S.A. Expires 12/31/28

PREPARED BY: PACE
DESIGNED BY: NE
DRAWN BY: DS, WW
CHECKED BY: TP
SCALE: AS NOTED
DATE: NOV 2025
JOB NO.: B614

MECHANICAL DETAILS V
TITLE

JOB TOWN OF JEROME WASTEWATER TREATMENT PLANT YAVAPAI CO. AZ

100% ISSUED FOR BID

PREPARED BY: TAYLOR B. PIERCE R.C.E 70097 DATE

PACE Advanced Water Engineering
8723 E. Via de Ventura, Suite 220, Scottsdale, CA 85258
P: (408) 991-3595 | www.pacewater.com

SHEET M8.4
50 OF 99 SHEETS
JOB NO. B614

THESE DRAWINGS ARE THE PROPERTY OF P.A.C.E. AND SHALL NOT BE REPRODUCED IN ANY MANNER NOR BE USED FOR CONSTRUCTION UNLESS STAMPED 'ISSUED FOR CONSTRUCTION'.

W:\B614\Engineering\B614-3\Sheets\B614 - M8.0 MECHANICAL DETAILS.dwg - Tab: M8.4 - by neddington on 02/22/26 at 12:41:49 PM

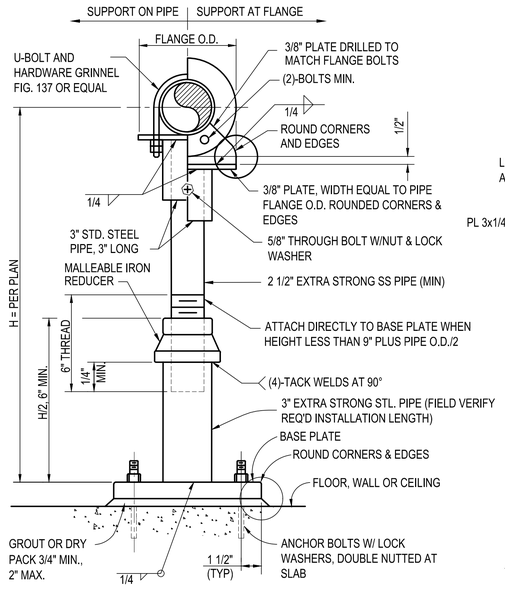

LOCATION	MEMBER	
	BASE PLATE	ANCHOR BOLTS
FLOOR	3/8 X 9 X 9	4-5/8"
CEILING	5/8 X 9 X 9	4-3/4"
WALL	5/8 X 9 X 9	4-3/4"

NOTES:
1. AS AN ALTERNATE, IF ADJUSTMENT IS NOT NECESSARY, DELETE 2 1/2" PIPE AND REDUCER AND WELD 3" STEEL PIPE DIRECTLY TO 3/8" PLATE ATTACHED TO PIPE FLANGE.
2. PIPE SUPPORT MAY BE ORIENTATED IN ANY DIRECTION.
3. FOR H > 3'-0", CONTRACTOR SHALL USE GRINNELL FIG. 264 AS APPROVED BY ENGINEER.

S1

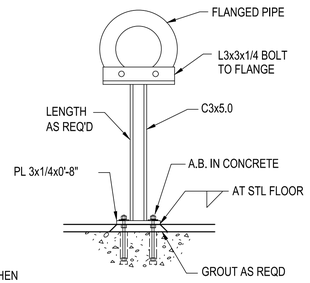

S2

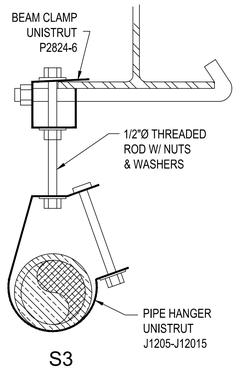

S3

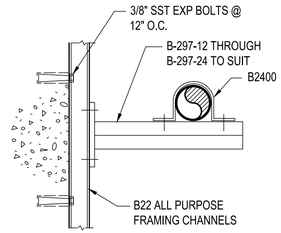

S4

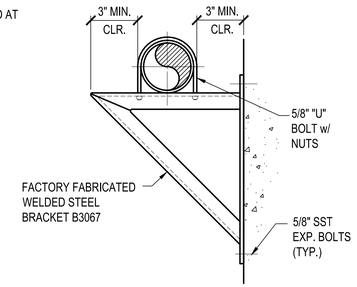

S5

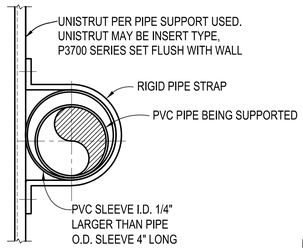

S6

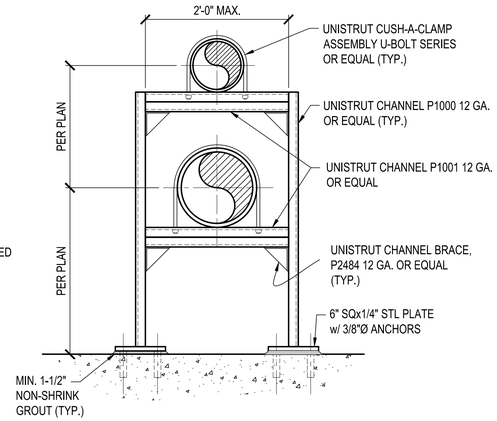

S7

GENERAL NOTES:

1. WHERE NO REFERENCE TO PIPE HANGERS OR SUPPORTS IS GIVEN ON THE DRAWINGS, THE CONTRACTOR SHALL USE THE APPROPRIATE HANGER OR SUPPORT SHOWN ON THIS DRAWING. MAXIMUM HANGER AND SUPPORT SPACING SHALL BE AS SHOWN IN SCHEDULE "A" ON THIS DRAWING. FIGURE NUMBERS ARE B-LINE, UNISTRUT OR GRINNELL.
2. ALL CONCRETE INSERTS, BRACKETS, CHANNELS, BOLTS, RODS, AND MISCELLANEOUS HARDWARE USED FOR PIPE HANGERS OR SUPPORTS SHALL BE 316 S.S., U.N.O.
3. CONCRETE CONTINUOUS INSERTS, B-LINE SERIES B52i, OR EQUAL, SHALL BE PROVIDED IN THE WALLS AND CEILINGS AS REQ'D OR AS NOTED ON THE DRAWINGS. INSERTS IN THE WALLS SHALL BE VERTICAL, UNLESS OTHERWISE NOTED AND SHALL BEGIN 6 INCHES ABOVE THE FLOOR AND END 6 INCHES BELOW THE CEILING. INSERTS IN THE CEILING SHALL BEGIN AND END 3 INCHES FROM WALLS AND BEAMS, WHERE PRACTICABLE. THE CENTERLINES OF WALL AND CEILING INSERTS SHALL ALIGN. MAXIMUM CENTER TO ENTER SPACING OF INSERTS SHALL BE 5'-0".
4. IN AREAS NOT COVERED UNDER NOTE 3, CONCRETE INSERTS SHALL BE B-LINE SERIES B3014N WITH APPROPRIATE NUT, B-LINE SERIES B521i CHANNEL EMBEDDED ANCHOR BOLTS, OR EQUAL. IN WITHOUT THE PRIOR WRITTEN APPROVAL OF THE ENGINEER (FOR EQUIPMENT LIFTING DEVICES, (SEE STRUCTURAL DRAWINGS).
5. SUPPORTS SHALL MEET MANUFACTURERS STANDARDIZATION SOCIETY OF THE VALVE AND FITTINGS INDUSTRY STANDARD PRACTICE SP58, LATEST EDITION.
6. HANGER BRACKET AND SUPPORT COMPONENTS MAY BE INTERCHANGED AS APPROVED BY THE ENGINEER.
7. TRAPEZE AND PIPE RACK COMPONENTS SHALL HAVE A MINIMUM STEEL THICKNESS OF 12 GAUGE. MAXIMUM DEFLECTION SHALL BE LIMITED TO 1/240 OF THE SPAN. CHANNEL COMPONENTS SHALL BE B-LINE SERIES B22 OR B22A, OR EQUAL.
8. CONCRETE INSERTS IN AREAS BELOW WATER SURFACE OR NORMALLY SUBJECT TO SUBMERGING SHALL BE EMBEDDED ANCHOR BOLTS, OR APPROVED EQUAL. IN NO CASE SHALL CONCRETE CONTINUOUS INSERTS BE USED IN THESE AREAS.
9. ALL PIPING, DUCTWORK, ACCESSORIES, APPURTENANCES, ETC. SHALL BE ANCHORED TO RESIST 200% OF THE APPLIED LOAD & A LATERAL SEISMIC FORCE OF 40 PERCENT OF ITS WEIGHT WITHOUT EXCESSIVE DEFLECTION.
10. CONTRACTOR SHALL VERIFY ALL SUPPORT DIMENSIONS AND LOCATIONS WITH APPROVED SHOP DRAWINGS FOR ITEMS BEING SUPPORTED BEFORE FABRICATION OR INSTALLATION OF SUPPORTS.

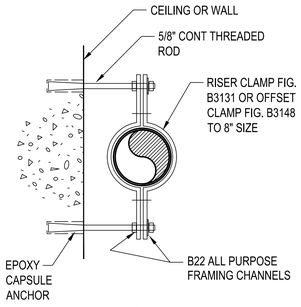

S8

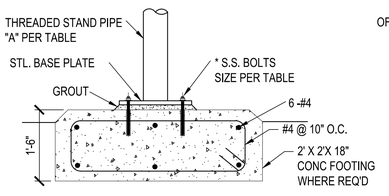

DIMENSIONS				
PIPE Ø SIZE	BOLT SIZE	STAND PIPE "A"	ADJ. PIPE "B"	FLANGE SUPPORT PLATE THK. "C"
4-12	1/2	3"	2 1/2"	1/4"
14-16	5/8	4"	3"	3/8"
18-36	7/8	6"	4"	3/8"

INSTALLATION NOTE:
PIPE SUPPORT SPACING, MATERIAL AND QUANTITY PER SPECS.

* BOLT EMBEDMENT DEPTH PER TABLE HEREON.

S1A

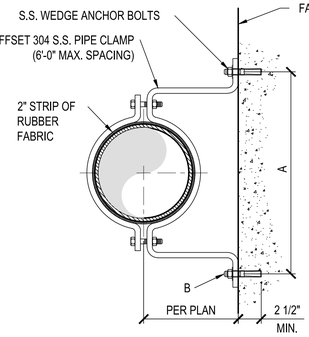

DIMENSIONS			
PIPE SIZE	A	HOLE SIZE B	BOLT SIZE
3	9 1/2	7/16	3/8
4	10 9/16	9/16	1/2
5	11 11/16	9/16	1/2
6	14 3/8	9/16	1/2
8	16 7/16	9/16	1/2
10	21 1/2	13/16	3/4
12	24 7/8	13/16	3/4
18	31	13/16	3/4
24	37	1 11/16	1

S9

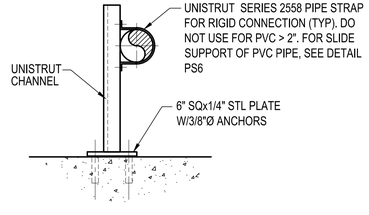

S12

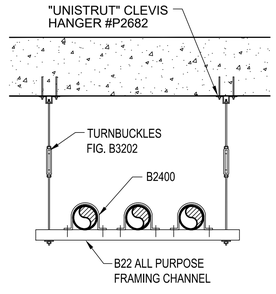

S10

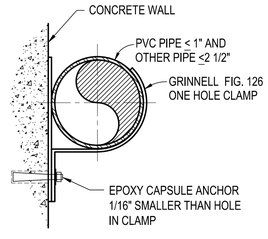

S11

SCHEDULE "A"

PIPE HANGER RODS AND SUPPORT SPACING

PIPE SIZE	ROD SIZE (INCHES)	MAX. SPAN (FT.) STEEL PIPE	COPPER PIPE	PVC PIPE	DUCTILE IRON PIPE	FIBERGLASS
UP TO 1"	3/8	6	5	5	-	-
1 1/4" TO 2"	3/8	10	8	5.5	10	-
2 1/2" TO 3 1/2"	1/2	10	8	6	10	-
4" TO 5"	5/8	10	-	8	10	-
6"	3/4	10	-	9	10	-
8" TO 12"	7/8	10	-	9	10	-
ABOVE 12"	1	10	-	9	10	-

BOLT DIAMETER	VERT BOLT EMBEDMENT LENGTH	HORIZ BOLT EMBEDMENT LENGTH	HEADED STUD FILLET WELD SIZE, "S".
1/2"	6"	4"	1/4"
5/8"	6"	4"	5/16"
3/4"	7"	5"	5/16"
7/8"	8"	6"	5/16"
1"	9"	7"	3/8"
1 1/8"	10"	8"	-----
1 1/4"	11"	9"	-----

TYP. ANCHOR AND EXPANSION BOLT SCHEDULE

NO	BY	DATE	REVISIONS	DATE	APP.

Registered Professional Engineer (Civil) CERTIFICATE NO. 70097 Timothy Pierce Signed 12/31/25 ARIZONA, U.S.A. Expires 12/31/26

THESE DRAWINGS ARE THE PROPERTY OF P.A.C.E. AND SHALL NOT BE REPRODUCED IN ANY MANNER NOR BE USED FOR CONSTRUCTION UNLESS STAMPED "ISSUED FOR CONSTRUCTION".

PREPARED BY: PACE
DESIGNED BY: NE
DRAWN BY: DS, WW
CHECKED BY: TP
SCALE: AS NOTED
DATE: NOV 2025
JOB NO.: B614

TITLE: MECHANICAL DETAILS VI

100% ISSUED FOR BID

PREPARED BY: TAYLOR B. PIERCE R.C.E. 70097 DATE

PACE
Advanced Water Engineering
8723 E. VIA de VENTURA, BLDG. A, SUITE 220 SCOTTSDALE, CA 85258
P: (480) 991-3955 | www.pacewater.com

JOB: TOWN OF JEROME WASTEWATER TREATMENT PLANT YAVAPAI CO. AZ

SHEET M8.5
51 OF 99 SHEETS

JOB NO. B614

PIPE SUPPORT DETAILS

N.T.S. A

W:\B614\Engineering\B614-30sheet\B614 - M8.0 MECHANICAL DETAILS.dwg - Tab: M8.5 - by neddington on 02/22/26 at 12:41:49 PM

GENERAL STRUCTURAL NOTES

APPLY UNLESS NOTED OTHERWISE

PK ASSOCIATES, LLC
6900 E. Belleview Ave. #200
Greenwood Village, Colorado 80111
Phone: (720) 799-1058
Email: cadd@pkastructural.com
Website: www.pkastructural.com

BUILDING CODE:

2012 EDITION OF THE INTERNATIONAL BUILDING CODE WITH TOWN OF JEROME AMENDMENTS.

LOADS:

ROOF LIVE LOAD = 20 PSF (REDUCIBLE).
TOTAL ROOF DEAD LOAD = 20 PSF.
GROUND SNOWLOAD = 20 PSF.
ROOF SNOW = 18.5 PSF.

WIND:

THE STRUCTURE AND ITS COMPONENTS ARE DESIGNED FOR WIND LOADS AS DEFINED BY THE BUILDING CODE, WHERE:

BASIC WIND SPEED 120 MPH.
RISK CATEGORY: III.
WIND EXPOSURE: C.
VELOCITY PRESSURE, qz = 23.7 PSF AT h = 12' FT. (MEAN ROOF HEIGHT). DESIGN WIND PRESSURES COMPONENTS AND CLADDING:

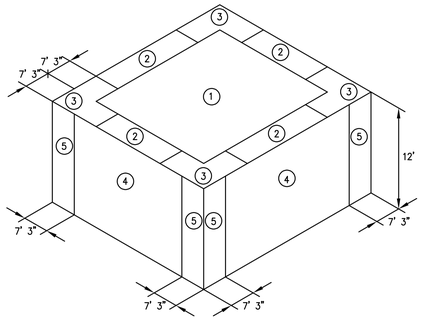

*PRESSURES SHOWN ARE ULTIMATE. MULTIPLY BY 0.6 FOR SERVICE LEVEL PRESSURES.

LOCATION	ZONE	EFFECTIVE WIND AREA (SF)	DESIGN WIND PRESSURE (PSF)*	
ROOF	1	10	+16.0	−54.9
		20	+16.0	−50.9
		50	+16.0	−45.6
		100	+16.0	−41.6
	2	10	+16.0	−74.2
		20	+16.0	−69.1
		50	+16.0	−62.3
		100	+16.0	−57.1
	3	10	+16.0	−103.3
		20	+16.0	−93.0
		50	+16.0	−79.4
		100	+16.0	−69.1
WALLS	4	10	+31.1	−30.4
		20	+29.1	−29.1
		50	+26.3	−27.2
		100	+24.2	−25.8
		500	+19.4	−22.6
	5	10	+31.1	−63.7
		20	+29.1	−58.1
		50	+26.3	−50.8
		100	+24.2	−45.2
		500	+19.4	−32.3
PARAPET	INTERIOR	10	+103.3	−58.1
		50	+88.6	−53.5
		100	+81.4	−50.0
	EXTERIOR	10	+132.4	−87.2
		50	+105.7	−77.0
		100	+93.3	−69.4

ZONE1: INTERIOR AREA OF ROOF AWAY FROM BUILDING EXTERIOR WALLS.
ZONE2: ROOF AREAS WITHIN 7'−3" OF EXTERIOR WALLS.
ZONE3: ROOF AREAS WITHIN 7'−3" OF BUILDING CORNERS.
ZONE4: EXTERIOR WALLS AWAY FROM BUILDING CORNERS.
ZONE5: EXTERIOR WALLS WITHIN 7'−3" OF BUILDING CORNERS.
−DESIGN WIND PRESSURES − PLUS AND MINUS SIGNS SIGNIFY PRESSURE ACTING TOWARD AND AWAY FROM EXTERIOR SURFACE.
−LINEAR INTERPOLATION BETWEEN VALUES OF TRIBUTARY AREA IS PERMISSIBLE.

SEISMIC:

RISK CATEGORY = III.
SEISMIC IMPORTANCE FACTOR: Ie = 1.25.
DESIGN CATEGORY = B.
SITE CLASS C.
SS = 0.31, S1 = 0.097, R = 3.5.
Sds = 0.269, Sd1 = 0.097.
BASIC SEISMIC−FORCE−RESISTING SYSTEM (INTERMEDIATE REINFORCED MASONRY SHEAR WALLS).
ANALYSIS PROCEDURE USED (EQUIVALENT LATERAL FORCE PROCEDURE).
CS = 0.096 (FACTORED).

FOUNDATIONS:

SOIL REPORT BY WESTERN TECHNOLOGIES INC; JOB NO.2522JW197; DATED OCTOBER 25, 2022; SPREAD FOOTINGS SHALL BEAR ON FIRM, UNDISTURBED SOIL AT BELOW GRADE TANKS AND 1' OF 2 SACK SLURRY AT GRADE. IN ACCORDANCE WITH THE ABOVE REPORT, BOTTOM OF FOOTING TO BE 2'0" MINIMUM BELOW FINISHED GRADE. (THESE FOOTING DEPTHS ARE MINIMUMS AND THE CONTRACTOR SHALL COORDINATE WITH SOILS REPORT AND OTHER TRADES TO ENSURE THESE MINIMUMS ARE SUFFICIENT FOR THE WORK.) FINISHED GRADE IS DEFINED AS TOP OF SLAB FOR INTERIOR FOOTINGS AND LOWEST ADJACENT GRADE WITHIN 5 FEET FOR PERIMETER FOOTINGS. DESIGN SOIL BEARING VALUE = 2500 PSF. FOUNDATION EXCAVATIONS SHALL BE INSPECTED BY SOILS ENGINEER PRIOR TO PLACEMENT OF CONCRETE.

CONCRETE:

MINIMUM 28 DAY STRENGTH 5,000 PSI EXCEPT AS FOLLOWS: (TYPE II, U.N.O.)

WALLS ---------- 5,000 PSI
MILD REINFORCED SLAB ---------- 5,000 PSI
FOUNDATIONS ---------- 5,000 PSI

MECHANICALLY VIBRATE ALL CONCRETE WHEN PLACED, EXCEPT THAT SLABS ON GRADE NEED BE VIBRATED ONLY AROUND UNDER−FLOOR DUCTS, ETC. MAXIMUM SLUMP 4 1/2" FOR CONCRETE WITHOUT PLASTICIZER. IF PLASTICIZER IS USED, A HIGHER FINAL SLUMP MAY BE ALLOWED UPON STRUCTURAL ENGINEER'S APPROVAL. CAST CLOSURE POUR AROUND COLUMNS AFTER COLUMN DEAD LOAD IS APPLIED. UNLESS APPROVED OTHERWISE IN WRITING BY THE ARCHITECT, ALL CONCRETE SLABS ON GRADE SHALL BE BOUND BY CONTROL JOINTS (KEYED OR SAW CUT), SUCH THAT THE ENCLOSED AREA DOES NOT EXCEED 225 SQUARE FEET. KEYED CONTROL JOINTS NEED ONLY OCCUR AT EXPOSED EDGES DURING POURING, ALL OTHER JOINTS MAY BE SAW CUT. CONTRACTOR SHALL SUBMIT PROPOSED LOCATIONS FOR APPROVAL PRIOR TO CONSTRUCTION.

REINFORCING:

ASTM A615 (FY = 60 KSI) DEFORMED BARS FOR ALL BARS. ALL GRADE 60 REINFORCING TO BE WELDED SHALL BE ASTM A706. WELDED WIRE FABRIC PER ASTM A185, WIRE PER ASTM A82. NO TACK WELDING OF REINFORCING BARS ALLOWED WITHOUT PRIOR REVIEW OF PROCEDURE WITH THE STRUCTURAL ENGINEER. LATEST ACI CODE AND DETAILING MANUAL APPLY. CLEAR CONCRETE COVERAGES AS FOLLOWS UNLESS NOTED OTHERWISE IN THE CONCRETE FIRE RATING TABLE:

CAST AGAINST AND PERMANENTLY EXPOSED TO EARTH ---------- 3"
EXPOSED TO EARTH OR WEATHER
#6 OR LARGER ---------- 2"
#5 AND SMALLER ---------- 1 1/2"
FLAT SLAB ---------- 3/4"
ALL OTHER PER LATEST EDITION OF ACI 318.

LAP SPLICES IN CONCRETE:

LAP SPLICES, UNLESS NOTED OTHERWISE, SHALL BE CLASS "B" TENSION LAP SPLICES PER LATEST EDITION OF ACI 318. LAP SPLICES IN CONCRETE COLUMNS SHALL BE TENSION LAP SPLICES. STAGGER SPLICES A MINIMUM OF ONE LAP LENGTH. LAPS IN WELDED WIRE FABRIC SHALL BE MADE SO THAT THE OVERLAP, MEASURED BETWEEN OUTERMOST CROSS WIRES OF EACH FABRIC SHEET, IS NOT LESS THAN THE SPACING OF CROSS WIRES PLUS 2 INCHES. ALL WELDED WIRE FABRIC SHALL BE CHAIRED TO ENSURE PROPER CLEARANCES.

ALL SPLICE LOCATIONS SUBJECT TO APPROVAL BY THE STRUCTURAL ENGINEER. PROVIDE BENT CORNER BARS TO MATCH AND LAP WITH HORIZONTAL BARS AT ALL CORNERS AND INTERSECTIONS PER TYPICAL DETAILS. REINFORCING BAR SPACING GIVEN ARE MAXIMUM ON CENTERS. ALL BARS PER CRSI SPECIFICATIONS AND HANDBOOK. DOWEL ALL VERTICAL REINFORCING TO FOUNDATION WITH STANDARD 90−DEGREE HOOKS UNLESS NOTED OTHERWISE. SECURELY TIE ALL BARS IN LOCATION BEFORE PLACING CONCRETE.

MASONRY:

MECHANICALLY VIBRATE GROUT IN VERTICAL SPACES IMMEDIATELY AFTER POURING AND AGAIN ABOUT 5 MINUTES LATER. PROVIDE CLEANOUTS IF GROUT LIFT EXCEEDS 4'−0" IN BLOCK WALLS. MAXIMUM GROUT LIFT SHALL BE 8'−0". UNLESS NOTED OTHERWISE ON THE PLANS, PLACE CONTROL JOINTS IN MASONRY WALLS SUCH THAT NO STRAIGHT RUN OF WALL EXCEEDS 24'−0". CONTROL JOINTS SHALL NOT OCCUR WITHIN 8'−0" OF WALL CORNERS, INTERSECTIONS, ENDS, WITHIN 24" OF CONCENTRATED POINTS OF BEARING OR JAMBS, OR OVER OPENINGS UNLESS SPECIFICALLY SHOWN ON THE STRUCTURAL DRAWINGS. ALL MASONRY BELOW FINISHED FLOOR OR GRADE SHALL BE GROUTED SOLID. LAP SPLICES SHALL BE AS FOLLOWS:

BAR SIZE	#3	#4	#5	#6	#7	#8	#9
BAR LAPS (INCHES)	27	36	45	54	63	72	81

HOLLOW CONCRETE MASONRY UNITS SHALL CONFORM TO ASTM C90, NORMAL WEIGHT, RUNNING BOND, MORTAR TYPE S (1800 PSI), COMPRESSIVE STRENGTHS AS FOLLOWS:

F'M(PSI)	UNIT STRENGTH, NET (PSI)	GROUT (PSI)	LOCATION
2000	2000	2000	TYPICAL U.N.O.

VERTICAL REINFORCING:

1 #5 IN CENTER OF GROUT AT CENTER OF WALL, CONTINUOUS FULL HEIGHT OF WALL AT ALL CORNERS, INTERSECTIONS, WALL ENDS, BEAM BEARINGS, JAMBS, EACH SIDE OF CONTROL JOINTS AND AT INTERVALS NOT TO EXCEED 48" O.C. UNLESS NOTED OTHERWISE. TIE AT 8'−0" VERTICALLY, WITH SINGLE WIRE LOOP TIE BY A.A. WIRE PRODUCTS COMPANY. LAP SPLICES SHALL BE AS PER SCHEDULE UNDER "MASONRY" SECTION. DOWEL ALL VERTICAL REINFORCING TO FOUNDATION WITH DOWELS TO MATCH VERTICAL REINFORCING.

HORIZONTAL REINFORCING:

2 #5 IN MINIMUM 8" DEEP GROUTED CONTINUOUS BOND BEAM AT (ELEVATED FLOORS AND) ROOFLINE. 1 #5 IN MINIMUM 8" DEEP GROUTED CONTINUOUS BOND BEAM AT TOP OF PARAPET OR TOP OF A FREESTANDING WALL AND AT BOTTOM OF WALL. USE 1 #4 HORIZONTAL BOND BEAM AT 48" O.C. VERTICALLY SPACED FOR ALL WALLS WITHOUT RUNNING BOND (STACKED BOND). PLACE THESE BARS CONTINUOUS THRU CONTROL JOINTS PER TYPICAL DETAIL. PROVIDE BENT BARS PER TYPICAL DETAILS, TO MATCH HORIZONTAL BOND BEAM REINFORCING, AT CORNERS AND WALL INTERSECTION TO MAINTAIN BOND BEAM CONTINUITY. LAP SPLICES SHALL BE AS PER SCHEDULE UNDER "MASONRY" SECTION. DO NOT SPLICE WITHIN 8'−0" OF CONTROL JOINTS. USE STANDARD WEIGHT (NO. 9 GAGE WIRE) DUR−O−WAL OR DUR−O−WIRE (OR EQUIVALENT) LADDER TYPE JOINT REINFORCEMENT AT 16" O.C. IN MASONRY WALLS.

ANCHOR BOLTS:

ALL ANCHOR BOLTS SHALL BE ASTM F1554 GRADE 36 (WELDABLE), U.N.O., WHEN SPECIFIED ON PLAN, ALL ASTM F1554 GRADE ANCHOR BOLTS SHALL BE 511 (WELDABLE) ANCHOR BOLTS.

MAY BE BENT IN FIELD PER AISC REQUIREMENTS TO FIX DAMAGED ANCHOR BOLTS; FIELD BENT IS LIMITED TO 45° OR LESS. ANCHOR BOLTS CAN HAVE HEADED OR HOOKED BOLTS SHAPES. USE HEADED ANCHOR BOLTS WHERE ANCHOR BOLT SHAPE IS NOT SPECIFIED. ANCHOR BOLTS SHALL BE INSPECTED PER SPECIAL INSPECTION TABLE REQUIREMENTS.

STRUCTURAL STEEL:

STEEL SETIONS − MINIMUM GRADE AND STRENGTH

STEEL WIDE FLANGES	= ASTM A992 (50KSI)
STEEL CHANNELS	= ASTM A36 (36KSI)
STEEL ANGLES	= ASTM A36 (36KSI)
STEEL COLUMN BASE PLATES	= ASTM A992 (50KSI)
STEEL PLATES AT MOMENT FRAME AND BRACED FRAME CONNECTIONS	= ASTM A992 (50KSI)
STEEL PLATES (MISCELLLANEOUS)	= ASTM A36 (36KSI)
STEEL HSS (RECTANGLE)	= ASTM A500 (46KSI)
STEEL HSS (ROUND)	= ASTM A500 (42KSI)
STEEL PIPES	= ASTM A501 (36KSI) − OR − ASTM A53 (35KSI), TYPE E OR S

NOTE: ALL 36KSI STEEL MAY BE SUBSTITUTED WITH 50KSI STEEL UNLESS NOTED OTHERWISE.

ALL CONSTRUCTION PER LATEST AISC HANDBOOK. ALL REFERENCE TO HEADED STUDS SHALL BE HIGH STRENGTH HEADED STUDS. ATTACHMENT OF HEADED STUDS SHALL CONFORM TO ALL REQUIREMENTS OF THE LATEST EDITION OF THE "RECOMMENDED PRACTICES FOR STUD WELDING" AND THE "STRUCTURAL WELDING CODE" PUBLISHED BY AWS. ALL BOLTS, ANCHOR BOLTS, EXPANSION BOLTS, ETC. SHALL BE INSTALLED WITH STEEL WASHERS AT SLOTTED HOLES IN STEEL SECTIONS. ALL WELDING SHALL BE PERFORMED BY WELDERS HOLDING VALID CERTIFICATES AND HAVING CURRENT EXPERIENCE IN THE TYPE OF WELD SHOWN ON THE DRAWINGS OR NOTES. CERTIFICATES SHALL BE THOSE ISSUED BY AN ACCEPTED TESTING AGENCY. ALL WELDING DONE BY E70 SERIES LOW HYDROGEN RODS UNLESS NOTED OTHERWISE. FOR GRADE 60 REINFORCING BARS, USE E90 SERIES. ALL WELDING PER LATEST AMERICAN WELDING SOCIETY STANDARDS, (EXCEPT STEEL JOISTS AND JOIST GIRDERS SHALL COMPLY WITH SJI STANDARDS). THESE DRAWINGS DO NOT DISTINGUISH BETWEEN SHOP AND FIELD WELDS; THE CONTRACTOR MAY SHOP WELD OR FIELD WELD AT HIS DISCRETION. SHOP WELDS AND FIELD WELDS SHALL BE SHOWN ON THE SHOP DRAWINGS SUBMITTED FOR REVIEW. ALL FULL (COMPLETE) PENETRATION WELDS SHALL BE TESTED AND CERTIFIED BY AN INDEPENDENT TESTING LABORATORY. WHEN STRUCTURAL STEEL IS FURNISHED TO A SPECIFIED MINIMUM YIELD POINT GREATER THAN 36 KSI, THE ASTM OR OTHER SPECIFICATION DESIGNATION SHALL BE INCLUDED NEAR THE ERECTION MARK ON EACH SHIPPING ASSEMBLY OR IMPORTANT CONSTRUCTION COMPONENT, OVER ANY SHOP COAT OF PAINT, PRIOR TO SHIPMENT FROM THE FABRICATOR'S PLANT. STRUCTURAL STEEL COMPONENTS, AND FASTENERS AT ALL EXTERIOR CONDITIONS SHALL BE GALVANIZED OR PROTECTED AGAINST CORROSION USING APPROVED METHOD PUBLISHED BY AISC OR ANSI. WELDS ON GALVANIZED STEEL SHALL FOLLOW AWS D−19.0 SPECIFICATIONS.

STRUCTURAL BOLTS:

ALL STRUCTURAL BOLTS SHALL BE ASTM F3125 GRADE A325 TYPE 1 AND SHALL BE INSTALLED AS BEARING−TYPE CONNECTIONS WITH THREADS INCLUDED IN SHEAR PLANE (I.E. A TYPE "N" CONNECTION) UNLESS NOTED OTHERWISE. USE A325 TYPE 3 BOLTS AT ALL CONNECTIONS EXPOSED TO WEATHERING. USE SC (SLIP CRITICAL) AT ALL MOMENT FRAMES AND BRACED FRAMES. USE ASTM A354 BOLTS WHERE THE BOLT LENGTH REQUIRED FOR THE CONNECTION EXCEEDS THE MINIMUM LENGTH OF AN A325 BOLT. BOLTS MAY BE TIGHTENED USING ANY AISC APPROVED METHOD. ALL STRUCTURAL BOLTING SHALL BE INSPECTED BY AN INDEPENDENT TESTING LABORATORY TO ENSURE BOLT TENSION.

STEEL GRATING:

UNLESS NOTED OTHERWISE IN ARCHITECTURAL SPECIFICATIONS, USE PAINTED (GALVANIZED) STEEL GRATING WITH 2 1/2" X 3/16" BEARING BARS AT 1 3/16" O.C. AND CROSSBARS AT 4" O.C. GRATING SHALL BE ERECTED AND ATTACHED PER MANUFACTURER'S RECOMMENDATIONS.

ROOF DECK:

DECK SHALL BE 1 1/2" DEEP, 36" WIDE, 20 GAGE GALVANIZED STEEL, WITH MINIMUM YIELD STRESS OF 50 KSI, WITH MINIMUM S = 0.237 IN3 AND I = 0.231 IN4 PER FOOT OF WIDTH. DECK SHALL BE ERECTED IN ACCORDANCE WITH MANUFACTURER'S RECOMMENDATIONS AS 1 SPAN MINIMUM AND SHALL BE ATTACHED FOR A MINIMUM DIAPHRAGM SHEAR CAPACITY OF 650 PLF USING THE FOLLOWING MINIMUM ATTACHMENTS:

WELD DECK TO SUPPORTING MEMBERS WITH 4 − 5/8" DIAMETER OR 3/8" X 1" PUDDLE WELDS PER SHEET AT ENDS, END LAPS AND AT INTERMEDIATE SUPPORTS, AND AT 24" O.C. AT PERIMETER BEAMS AND OPENING EDGES RUNNING PARALLEL TO THE DECK. SIDE SEAM ATTACHMENT SHALL BE VSC2 AT 24" O.C.

CONSTRUCTION JOINTS:

ALL CONSTRUCTION JOINTS IN WALLS SHALL BE KEYED IN ACCORDANCE WITH THE TYPICAL CONSTRUCTION JOINT DETAILS SHOWN ON THE STRUCTURAL DRAWINGS OR, AT THE CONTRACTOR'S OPTION, SHALL BE INTENTIONALLY ROUGHENED IN ACCORDANCE WITH THE FOLLOWING: THE SURFACE OF ROUGHENED JOINTS SHALL BE SAND BLASTED OR ROUGHENED WITH A CHIPPING HAMMER TO EXPOSE THE AGGREGATE EMBEDDED IN THE PREVIOUS POUR. THE EXPOSED AGGREGATE SHALL PROTRUDE A MINIMUM OF 1/4 INCH. ALL SURFACES OF CONSTRUCTION JOINTS SHALL BE CLEANED AND LAITANCE REMOVED. IMMEDIATELY BEFORE NEW CONCRETE IS PLACED, ALL CONSTRUCTION JOINTS SHALL BE WETTED AND STANDING WATER REMOVED. VERTICAL CONSTRUCTION JOINTS IN WALLS SHALL BE HELD TO A MAXIMUM SPACING OF 60'−0". ALL CONSTRUCTION JOINTS IN SLABS, JOISTS, BEAMS, AND GIRDERS SHALL BE OFFSET A DISTANCE EQUAL TO TWICE THE WIDTH OF THE BEAM.

ACCORDANCE WITH THE TYPICAL SLAB ON DECK CONSTRUCTION JOINT DETAIL SHOWN ON THE STRUCTURAL DRAWINGS. BEAMS AND GIRDERS HAVE BEEN DESIGNED ASSUMING THE CONSTRUCTION JOINTS TO BE LOCATED IN THE MIDDLE THIRD OF THE BEAM, GIRDER, OR SLAB SPAN. ALL CONSTRUCTION, CONTROL, AND ISOLATION JOINTS FOR SLABS ON GRADE SHALL BE IN ACCORDANCE WITH THE TYPICAL SLAB ON GRADE DETAILS. THE CONTRACTOR SHALL SUBMIT THE PROPOSED LOCATIONS OF CONSTRUCTION JOINTS TO THE ENGINEER FOR ACCEPTANCE BEFORE STARTING CONSTRUCTION.

ELECTRICAL CONDUIT IN CONCRETE SLABS:

ELECTRICAL CONDUIT SHALL BE RIGID STEEL CONDUIT OR FLEXIBLE PLASTIC CONDUIT. ALUMINUM CONDUIT IS PROHIBITED. CONDUIT WITH A MAXIMUM OUTSIDE DIAMETER OF 1/6 TIMES THE SLAB THICKNESS MAY BE EMBEDDED IN ONE LAYER AT THE MID−DEPTH OF SLABS. MINIMUM CLEAR DISTANCE BETWEEN CONDUITS SHALL BE 3 TIMES CONDUIT DIAMETER. CONDUIT SHALL BE FIRMLY CHAIRED AND TIED TO PREVENT DISPLACEMENT DURING POURING. PLACE #3 AT 12 INCHES O.C. ADDITIONAL REINFORCING ABOVE AND BELOW, PERPENDICULAR TO THE CONDUIT. THE ADDED REINFORCING SHALL EXTEND 1'−0" PAST THE CONDUIT ON BOTH SIDES. FOR CONDUIT PLACED IN SLABS ON METAL DECKING, CONDUIT SHALL RUN IN THE METAL DECK FLUTES PER THE TYPICAL CONDUIT IN SLAB ON METAL DECK DETAIL.

CONCRETE INSERTS:

THIN SLAB TYPE INSERTS SHALL BE GALVANIZED AND HAVE THE FOLLOWING MINIMUM WORKING LOADS(A 4:1 RATIO OF ULTIMATE TO WORKING VALUES IS ASSUMED):

BOLT DIAMETER	WORKING LOAD SHEAR	TENSION
1/2"	1,000 LBS.	650 LBS.
5/8"	1,250 LBS.	700 LBS.
3/4"	1,600 LBS.	850 LBS.

COIL LOOP INSERTS SHALL BE GALVANIZED AND HAVE THE FOLLOWING MINIMUM WORKING LOADS(A 3:1 RATIO OF ULTIMATE TO WORKING VALUES IS ASSUMED):

BOLT DIAMETER	WORKING LOAD SHEAR	TENSION
1/2"	2,200 LBS.	2,820 LBS.
5/8"	3,000 LBS.	3,620 LBS.
3/4"	3,100 LBS.	3,660 LBS.

THREADED COIL RODS, COIL NUTS, ETC., USED IN CONJUNCTION WITH CONCRETE INSERTS, SHALL HAVE A WORKING LOAD EQUAL TO OR GREATER THAN THE CORRESPONDING CONCRETE INSERT. CONTRACTOR SHALL SUBMIT MANUFACTURER'S SIZE AND STRENGTH DATA PRIOR TO CONSTRUCTION TO THE STRUCTURAL ENGINEER THRU THE ARCHITECT. VALUES LISTED ABOVE ARE FOR RICHMOND STRUCTURAL CONNECTION INSERTS.

EXPANSION AND SCREW ANCHORS:

USE STUD TYPE EXPANSION ANCHOR WITH A SINGLE PIECE WEDGE ONLY WHERE NOTED ON PLANS. IF USE IS REQUESTED FOR OTHER THAN WHERE NOTED CONTACT STRUCTURAL ENGINEER THROUGH ARCHITECT FOR APPROVAL.

CONTRACTOR SHALL SUBMIT MANUFACTURER'S SIZE AND STRENGTH DATA TO ENGINEER THROUGH ARCHITECT PRIOR TO CONSTRUCTION. INSTALL ALL BOLTS AS OUTLINED IN MANUFACTURER'S SPECIFICATIONS, UTILIZING PROPER SIZE AND TYPE OF DRILL, CLEANING HOLE, DRIVING AND TIGHTENING BOLT.

IN CONCRETE:

ANCHORS USED MUST HAVE ICC APPROVAL AND INCLUDE HILTI KWIK BOLT TZ2 (ESR−4266), AND SIMPSON STRONG BOLT−2 (ESR−3037), AND DEWALT POWER−STUD+SD2 (ESR−2502), AND SIMPSON TITEN HD (ESR−2713), HILTI KWIK HUS−EZ (ESR−3027), AND DEWALT SCREW−BOLT+ (ESR−3889) OR APPROVED EQUAL.

IN MASONRY:

ANCHORS USED MUST HAVE ICC APPROVAL AND INCLUDE HILTI KWIK BOLT 3 (ESR−1385), AND SIMPSON STRONG BOLT−2 (ES−240), DEWALT POWER−STUD+SD1 (ESR−2966), HILTI KWIK HUS−EZ (ESR−3056) AND SIMPSON TITEN HD (ESR−1056), AND DEWALT SCREW−BOLT+ (ESR−4042) OR APPROVED EQUAL.

EPOXY ANCHORS IN CONCRETE AND MASONRY:

INJECTABLE ADHESIVE SHALL BE USED FOR INSTALLATION OF REINFORCING STEEL DOWELS OR THREADED ANCHOR RODS AND INSERTS INTO NEW OR EXISTING CONCRETE OR SOLID GROUTED CONCRETE MASONRY UNITS ONLY WHERE SPECIFIED ON PLANS. IF USE IS REQUESTED FOR OTHER THAN WHERE NOTED CONTACT STRUCTURAL ENGINEER THROUGH ARCHITECT FOR APPROVAL. ADHESIVE SHALL BE FURNISHED IN SIDE BY SIDE PACKS WHICH KEEP COMPONENT A AND COMPONENT B SEPARATE. USE ONLY INJECTION TOOLS AND STATIC MIXING NOZZLES RECOMMENDED BY MANUFACTURER. MANUFACTURER'S INSTRUCTIONS SHALL BE FOLLOWED.

IN CONCRETE:

ANCHORS USED MUST HAVE I.C.C. APPROVAL IN CRACKED CONCRETE AND INCLUDE SIMPSON SET−XP (ESR−2508), HILTI HIT−RE500−V3 (ESR−3814), DEWALT PURE110+ (ESR−3298) OR APPROVED EQUIVALENT. THE USE OF ANY EPOXY ANCHOR MUST BE APPROVED BY THE ENGINEER OF RECORD PRIOR TO INSTALLATION.

IN MASONRY:

ANCHORS USED MUST HAVE ICC APPROVAL AND INCLUDE SIMPSON SET (ESR−1772) AND HILTI HIT−HY 270 MAX (ESR−4143) AND DEWALT AC100+GOLD (ESR−3200) OR APPROVED EQUIVALENT. THE USE OF ANY EPOXY ANCHOR MUST BE APPROVED BY THE ENGINEER OR RECORD PRIOR TO INSTALLATION.

1. ADHESIVE ANCHORS INSTALLED IN HORIZONTAL TO VERTICALLY OVERHEAD ORIENTATION TO SUPPORT SUSTAINED TENSION LOADS SHALL BE DONE BY A CERTIFIED ADHESIVE ANCHOR INSTALLER (AAI) AS CERTIFIED THROUGH ACI (ACI 318−11 D.9.2.2) / (ACI 318−14 17.8.2.2) / (ACI 318−19 17.2.3) PROOF OF CURRENT CERTIFICATION SHALL BE SUBMITTED TO THE ENGINEER FOR APPROVAL PRIOR TO COMMENCEMENT OF INSTALLATION.
2. ADHESIVE ANCHORS MUST BE INSTALLED IN CONCRETE AGED A MINIMUM OF 21 DAYS (ACI 318−11 D.2.2) / (ACI 318−14 17.1.2) / (ACI 318−19 17.2.2).
3. THE REMOVAL AND RESETTING OF POST INSTALLED ANCHORS IS PROHIBITED (ACI 318−19 17.3.1).
4. PROVIDE SPECIAL INSPECTION FOR ALL MECHANICAL AND ADHESIVE ANCHORS PER THE APPLICABLE BUILDING CODE AND PER THE CURRENT ICC−ES REPORT (IBC 2012, 2015, 2018 TABLE 1705.3 TYPE 4, NOTE B).

STRUCTURAL FILL:

ALL FILL PLACED TO SUPPORT SLABS ON GRADE, BEHIND PERMANENT WALLS, AND AROUND ALL DRAINS SHALL CONSIST OF WELL GRADED, GRANULAR MATERIAL PER THE SPECIFICATIONS. SOILS FOR STRUCTURAL FILL SHALL BE APPROVED BY THE GEOTECHNICAL ENGINEER. STRUCTURAL FILL SHALL BE PLACED ON SOUND NATIVE MATERIAL. PROOF−ROLL CUT AREAS WHICH PROVIDE SUPPORT FOR PERMANENT STRUCTURES. AREAS WHICH ARE EXCESSIVELY YIELDING, AS DETERMINED BY THE CONTINUOUS OBSERVATION OF THE GEOTECHNICAL ENGINEER, SHALL BE OVEREXCAVATED AND REPLACED WITH STRUCTURAL FILL. STRUCTURAL FILL SHALL BE PLACED PER THE SPECIFICATION. USE LEAN CONCRETE FILL BELOW ALL PIPES EXISTING OUT OF BASEMENT WALL, FULL HEIGHT OF WALL. CONCRETE SHALL CONTAIN 2 SACKS OF CEMENT PER YARD.

LATERAL PRESSURE ON SUBGRADE WALLS:

THE DESIGN PRESSURES FOR SUBGRADE WALLS ARE BASED ON A "DRAINED" CONDITION. SEE CIVIL AND MECHANICAL DRAWINGS FOR SUBGRADE DRAINAGE SYSTEM. SEE GEOTECHNICAL REPORT FOR COMPACTION REQUIREMENTS AT SUBGRADE WALLS. SUBGRADE WALLS AND SUPPORTING SLABS SHALL HAVE ATTAINED THEIR FULL CONCRETE STRENGTH BEFORE PLACING ANY BACKFILL U.N.O. THE CONTRACTOR SHALL PROVIDE TEMPORARY BRACES FOR WALLS IF BACKFILL IS PLACED BEFORE WALLS AND SLABS ACHIEVE FULL CONCRETE STRENGTH.

NOTES ON CRACKING OF CONCRETE STRUCTURES:

CRACKING IS INHERENT TO THE MATERIAL PROPERTIES OF CONCRETE CONSTRUCTION (INCLUDING POST−TENSIONED CONCRETE STRUCTURES). WHILE EVERY EFFORT HAS BEEN MADE TO MINIMIZE THE EFFECTS OF UNSIGHTLY CRACKING, THE PRESENCE OF CRACKS ARE NORMAL AND UNAVOIDABLE. THE DESIGN OF THE CONCRETE STRUCTURAL ITEMS HAVE BEEN ANALYZED USING A "CRACKING SECTION." THE PRESENCE OF THE CRACKING SHOULD NOT BE CONSIDERED DETRIMENTAL TO THE STRUCTURE. CRACKS LARGER THAN 10 MILS SHALL BE FILLED AND SEALED WITH AN APPROVED CRACK FILLER TO PREVENT FUTURE DETERIORATION. ALLOWANCE SHALL BE MADE IN THE CONSTRUCTION BUDGET FOR SEALING OF SUCH CRACKS. IN SOME CASE, CRACKS DO NOT APPEAR UNTIL WELL AFTER CONSTRUCTION HAS BEEN COMPLETED. IT IS THE RESPONSIBILITY OF THE OWNER TO MAINTAIN THE STRUCTURE PROPERLY OVER THE LIFE OF THE STRUCTURE. CONCRETE CRACKS, SHOULD THEY OCCUR, SHALL BE FILLED AND SEALED TO PREVENT PREMATURE DETERIORATION OF THE STRUCTURE.

STRUCTURAL SHEET INDEX

SHEET	DESCRIPTION
S1.1	GENERAL STRUCTURAL NOTES
S1.2	GENERAL STRUCTURAL NOTES
S1.3	TYPICAL DETAILS
S1.4	TYPICAL DETAILS
S1.5	TYPICAL DETAILS
S1.6	TYPICAL DETAILS
S1.7	TYPICAL DETAILS
S2.00	FOUNDATION PLAN
S2.01	FRAMING PLAN
S2.10	FRAMING PLAN
S3.1	FOUNDATION DETAILS
S3.2	FOUNDATION DETAILS
S3.3	FRAMING DETAILS
S4.1	FRAMING DETAILS
S4.2	FRAMING DETAILS

NO	BY	DATE	REVISIONS	DATE	APP.

Registered Professional Engineer
CERTIFICATE NO.
70374
JAMES APPLEYARD
10/31/25
Date Signed
ARIZONA, U.S.A.

PREPARED BY: PKA
DESIGNED BY: JA
DRAWN BY: NS
CHECKED BY: JA
SCALE: AS NOTED
DATE: SEP 2025
JOB NO.: 23364

THESE DRAWINGS ARE THE PROPERTY OF P.A.C.E. AND SHALL NOT BE REPRODUCED IN ANY MANNER NOR BE USED FOR CONSTRUCTION UNLESS STAMPED "ISSUED FOR CONSTRUCTION".

TITLE: GENERAL STRUCTURAL NOTES

JOB: TOWN OF JEROME WASTEWATER TREATMENT PLANT — YAVAPAI AZ

ISSUED FOR BID

PREPARED BY: TAYLOR B. PIERCE — R.C.E 70097 — DATE

PACE
Advanced Water Engineering
8723 E. Via de Commercio, Suite 1 | Scottsdale, CA 85258
P: (480) 991-3995 | www.paceadvisor.com

SHEET S1.1
52 OF 99 SHEETS

JOB NO. 23364

GENERAL STRUCTURAL NOTES

APPLY UNLESS NOTED OTHERWISE

PK ASSOCIATES, LLC
6900 E. Belleview Ave. #200
Greenwood Village, Colorado 80111
Phone: (720) 799-1058
Email: cadd@pkastructural.com
Website: www.pkastructural.com

SHOP DRAWINGS:

SHOP DRAWINGS SHALL BE SUBMITTED FOR ALL STRUCTURAL ITEMS IN ADDITION TO ITEMS REQUIRED BY ARCHITECTURAL SPECIFICATIONS.

THE CONTRACTOR SHALL REVIEW ALL SHOP DRAWINGS PRIOR TO SUBMITTAL. ITEMS NOT IN ACCORDANCE WITH CONTRACT DOCUMENTS SHALL BE FLAGGED UPON HIS REVIEW.

VERIFY ALL DIMENSIONS WITH ARCHITECTURAL DRAWINGS AND ALL FINISHED GRADE WITH CIVIL DRAWINGS.

ANY CHANGES, SUBSTITUTIONS, OR DEVIATIONS FROM CONTRACT DOCUMENTS SHALL BE CLOUDED BY MANUFACTURER OR FABRICATOR. ANY OF THE AFOREMENTIONED WHICH ARE NOT CLOUDED OR FLAGGED BY SUBMITTING PARTIES, SHALL NOT BE CONSIDERED APPROVED AFTER ENGINEER'S REVIEW, UNLESS NOTED ACCORDINGLY.

THE ENGINEER HAS THE RIGHT TO APPROVE OR DISAPPROVE ANY CHANGES TO CONTRACT DOCUMENTS AT ANYTIME BEFORE OR AFTER SHOP DRAWING REVIEW.

THE SHOP DRAWINGS DO NOT REPLACE THE CONTRACT DOCUMENTS. ITEMS OMITTED OR SHOWN INCORRECTLY AND ARE NOT FLAGGED BY THE STRUCTURAL ENGINEER OR ARCHITECT ARE NOT TO BE CONSIDERED CHANGES TO CONTRACT DOCUMENTS. IT IS THE CONTRACTOR'S RESPONSIBILITY TO MAKE SURE ITEMS ARE CONSTRUCTED PER THE CONTRACT DOCUMENTS.

THE ADEQUACY OF ENGINEERING DESIGNS AND LAYOUT PERFORMED BY OTHERS RESTS WITH THE DESIGNING OR SUBMITTING AUTHORITY.

REVIEWING IS INTENDED ONLY AS AN AID TO THE CONTRACTOR IN OBTAINING CORRECT SHOP DRAWINGS. RESPONSIBILITY FOR CORRECTNESS SHALL REST WITH THE CONTRACTOR.

GENERAL:

ENTIRE CONTRACT DOCUMENTS SHALL BE USED TO CONSTRUCT BUILDING. SOME CRITICAL ITEMS REQUIRED BY OTHER DISCIPLINES MAY NOT BE SHOWN ON STRUCTURAL DRAWING (I.E. WALL, FLOOR AND ROOF OPENINGS, ARCHITECTURAL, MECHANICAL AND PLUMBING LOADS, SUPPORT PLATES ETC.)

ITEMS SHOWN BY OTHER DISCIPLINES WITH REFERENCE TO STRUCTURAL DRAWING BUT NOT SHOWN ON THESE STRUCTURAL DOCUMENTS SHALL BE CONSIDERED DESIGN BUILD ITEMS. CONTRACTOR SHALL SUBMIT DESIGN BY OTHERS FOR REVIEW.

THE STRUCTURAL CONSTRUCTION DOCUMENTS REPRESENT THE FINISHED STRUCTURE. THEY DO NOT INDICATE THE METHOD OF CONSTRUCTION. THE CONTRACTOR SHALL PROVIDE ALL MEASURES NECESSARY TO PROTECT THE STRUCTURE DURING CONSTRUCTION. SUCH MEASURES SHALL INCLUDE, BUT NOT BE LIMITED TO, BRACING, SHORING FOR LOADS DUE TO CONSTRUCTION EQUIPMENT, ETC. THE STRUCTURAL ENGINEER SHALL NOT BE RESPONSIBLE FOR THE CONTRACTOR'S MEANS, METHODS, TECHNIQUES, SEQUENCES FOR PROCEDURE OF CONSTRUCTION, OR THE SAFETY PRECAUTIONS AND THE PROGRAMS INCIDENT THERETO (NOR SHALL OBSERVATION VISITS TO THE SITE INCLUDE INSPECTION OF THESE ITEMS).

CONSTRUCTION MATERIALS SHALL BE SPREAD OUT IF PLACED ON FRAMED CONSTRUCTION. LOAD SHALL NOT EXCEED THE DESIGN LIVE LOAD PER SQUARE FOOT.

WHERE REFERENCE IS MADE TO VARIOUS TEST STANDARDS FOR MATERIALS, SUCH STANDARDS SHALL BE THE LATEST EDITION AND/OR ADDENDA.

ESTABLISH AND VERIFY ALL OPENINGS AND INSERTS FOR ARCHITECTURAL, MECHANICAL, PLUMBING AND ELECTRICAL WITH APPROPRIATE TRADES, DRAWINGS AND SUBCONTRACTORS PRIOR TO CONSTRUCTION.

OPTIONS ARE FOR CONTRACTOR'S CONVENIENCE. IF THE CONTRACTOR CHOOSES AN OPTION, THE CONTRACTOR SHALL BE RESPONSIBLE FOR ALL NECESSARY CHANGES AND SHALL COORDINATE ALL DETAILS.

NOTES AND DETAILS ON DRAWINGS SHALL TAKE PRECEDENCE OVER GENERAL STRUCTURAL NOTES AND TYPICAL DETAILS. WHERE NO DETAILS ARE SHOWN, CONSTRUCTION SHALL CONFORM TO SIMILAR WORK ON THE PROJECT.

ALL DIMENSIONS SHOWN (INCLUDING ELEVATIONS) ON STRUCTURAL DRAWINGS ARE TO ASSIST CONTRACTOR IN VERIFICATION. SCALING DIMENSIONS FROM DRAWINGS IS NOT PERMITTED. LOCATION OF ALL ITEMS SHALL BE DETERMINED BY DIMENSIONS OR NOTES ONLY; DO NOT USE GRAPHIC APPEARANCE TO ASSUME SPECIFIC LOCATIONS.

CONTRACTOR SHALL BE RESPONSIBLE FOR VERIFICATION OF ALL DIMENSIONS WITH ARCHITECTURAL AND FINISHED GRADE WITH CIVIL DRAWINGS PRIOR TO START OF CONSTRUCTION. RESOLVE ANY DISCREPANCY WITH THE ARCHITECT.

TYPICAL DETAILS MAY NOT NECESSARILY BE CUT ON PLANS, BUT APPLY UNLESS NOTED OTHERWISE.

WHERE DISCREPANCIES OCCUR BETWEEN PLANS, DETAILS, GENERAL STRUCTURAL NOTES AND SPECIFICATIONS, THE GREATER REQUIREMENTS SHALL GOVERN.

ANY ENGINEERING DESIGN, PROVIDED BY OTHERS AND SUBMITTED FOR REVIEW, SHALL BEAR THE SEAL OF AN ENGINEER REGISTERED IN THE STATE OF JURISDICTION.

SUPPLIER OF ENGINEERED STRUCTURAL COMPONENTS (I.E. STEEL JOISTS, STAIRS, PRECAST ITEMS) SHALL BE RESPONSIBLE FOR COMPLETE DESIGN AND SHALL USE ENTIRE CONTRACT DOCUMENTS TO INCLUDE ALL LOADS AND DETAIL REQUIREMENTS FROM ALL DISCIPLINES. SUPPLIER SHALL PROVIDE ADDITIONAL MATERIAL REQUIRED TO MEET ALL THEIR REQUIREMENTS FOR INSTALLATION (I.E. WIDER BEARING PLATES, SHIMS, ERECTION BOLTS ETC.).

STRUCTURAL STEEL SUPPLIER SHALL FURNISH BOLTS FOR OSHA CONNECTIONS (SEE DRAWINGS FOR DETAILS).

WALL SHORING SHALL BE INSTALLED PRIOR TO BACKFILLING BEHIND ALL BUILDING RETAINING WALLS, UNLESS ALL RESTRAINING SLABS ARE INSTALLED. USE HANDTAPPING ONLY WHEN WITHIN 8'-0", OR WITHIN HALF THE WALL HEIGHT OF BACKFILLED WALL.

CONTINUOUS FOUNDATION DRAIN PIPES (FRENCH DRAINS) OR WEEP HOLES SHALL BE PROVIDED BEHIND ALL BASEMENT WALLS AND ALL EXTERIOR RETAINING WALLS THAT RETAIN MORE THAN 3'-0" OF SOIL. WEEP HOLES WHERE USED SHALL BE 2" IN DIAMETER AT 6'-0" O.C. MAXIMUM.

BUILDING TOLERANCES:

STANDARD TOLERANCES SHALL BE BASED ON THE REQUIREMENTS OF THE AISC CODE OF STANDARD PRACTICE AND ACI 117, STANDARD SPECIFICATIONS FOR TOLERANCES FOR CONCRETE CONSTRUCTION AND MATERIALS.

SEQUENCING CONSTRUCTION AND LATERAL STABILITY:

THE STRUCTURAL COMPONENTS BY THEMSELVES ARE A NON-SELF-SUPPORTING STRUCTURE. LATERAL FORCES DUE TO WIND, EARTHQUAKE, OR SOIL ARE CARRIED BY THE ROOF AND FLOOR DIAPHRAGMS TO THE LATERAL SYSTEM. CERTAIN ELEMENTS SHOWN ON OR LOCAL STABILITY OF OTHER ELEMENTS (SUCH AS BEAMS, COLUMNS, AND WALLS). IF, DUE TO SEQUENCING OF CONSTRUCTION, THESE STABILITY ELEMENTS ARE NOT IN PLACE, THE CONTRACTOR SHALL RETAIN A LICENSED STRUCTURAL ENGINEER WHO SHALL INVESTIGATE WHERE TEMPORARY SHORING/BRACING IS REQUIRED, AND SHALL DESIGN THIS TEMPORARY SHORING/BRACING. THE CONTRACTOR SHALL PROVIDE THIS SHORING/BRACING UNTIL THE REQUIRED STRUCTURAL ELEMENTS AND THEIR CONNECTIONS HAVE BEEN INSTALLED AND REACH THEIR FINAL DESIGN STRENGTHS.

MISCELLANEOUS:

REFER TO ARCHITECTURAL, MECHANICAL, ELECTRICAL, CIVIL, ELEVATOR, OR OTHER SPECIALTY ENGINEERING DRAWINGS FOR DIMENSIONS NOT SHOWN, INCLUDING BUT NOT LIMITED TO: SIZE AND LOCATION OF CURBS, EQUIPMENT HOUSEKEEPING PADS, WALL AND FLOOR OPENINGS, BLOCKOUTS, FLOOR DEPRESSIONS, SUMPS, DRAINS, ANCHOR BOLTS, EMBEDDED ITEMS, ARCHITECTURAL TREATMENT, ETC. CONTRACTOR SHALL VERIFY DIMENSIONS AND RESOLVE DISCREPANCIES OR CONFLICTS PRIOR TO CONSTRUCTION. WHERE SECTIONS ARE INDICATED ON THE PLAN BY A NUMBER AND A DRAWING NUMBER THUS, 1/S5.01, THE INDICATED SECTION (1) IS SHOWN ON STRUCTURAL DRAWING S5.01.

ALL WINDOW SYSTEMS SHALL BE DESIGNED TO ACCOMMODATE VERTICAL DEFLECTION OF THE STRUCTURE OF 1/2" MINIMUM LIVE LOAD DEFLECTION, UNLESS GREATER VALUE IS NOTED ON PLANS OR DETAILS.

FLOOR FLATNESS/LEVELNESS SHALL MEET ARCHITECTURAL SPECIFICATIONS (1/4" IN 10 FOOT MINIMUM LEVELNESS UNLESS TIGHTER REQUIREMENT IN SPECIFICATIONS) IN HEIGHT FOR ALL STRUCTURAL SYSTEMS. CONTRACTOR SHALL INCLUDE COST FOR LEVELING ALL FLOORS. FOR ESTIMATING PURPOSES ONLY, ASSUME 1/2" THICK LEVELING AGENT OVER 15% OF FLOOR AREA.

FABRICATOR APPROVAL:

SPECIAL INSPECTIONS NOTED ABOVE APPLY TO SHOP FABRICATED ASSEMBLIES IN ADDITION TO ON-SITE WORK UNLESS THE FABRICATOR IS AN "APPROVED FABRICATOR" AS DEFINED IN 2022 CBC.

STRUCTURAL OBSERVATION:

ENGINEER OF RECORD SHALL PROVIDE VISUAL OBSERVATION OF THE STRUCTURAL SYSTEM, FOR GENERAL CONFORMANCE TO THE APPROVED PLANS AND SPECIFICATIONS, AT SIGNIFICANT CONSTRUCTION STAGES AND AT THE COMPLETION OF THE STRUCTURAL SYSTEM. CONTRACTOR IS REQUIRED FOR COORDINATING THE TIMING OF SITE VISITS AND SHALL INCLUDE A MINIMUM OF 3 VISITS. THESE VISITS ARE TO BE PAID BY THE CONTRACTOR. STRUCTURAL OBSERVATION DOES NOT INCLUDE OR WAIVE THE RESPONSIBILITY FOR THE INSPECTIONS REQUIRED BY THE BUILDING CODE (NOTED ABOVE).

INSTRUCTIONS TO BIDDERS CONTINGENCIES:

1. UNDER NO CIRCUMSTANCES SHALL THESE DRAWINGS BE "FINAL BID" UNTIL THE PROJECT IS FULLY PERMITTED.
2. ALL PRELIMINARY PRICING EFFORTS SHALL BE CONSIDERED TO BE ESTIMATES ONLY AND SHALL INCLUDE THE NECESSARY CONTINGENCIES, ALLOWANCES, ALTERNATES, ETC. AS APPROPRIATE TO ACCOUNT FOR MODIFICATIONS AND ADDITIONS THAT WILL OCCUR TO THE DRAWINGS DURING THE FINALIZATION OF THE DESIGN AND PERMITTING.
3. THE OWNER OR CONTRACTOR SHALL UTILIZE THE FOLLOWING MINIMUM CONTINGENCIES FOR EACH OF THE STRUCTURAL ELEMENT COSTS TO BE USED AT THE SOLE DISCRETION OF THE STRUCTURAL ENGINEER:

CONSTRUCTION DOCUMENTS/FINAL BID 3% MINIMUM

ALL OF THE "FINAL BID" CONTINGENCIES NOT USED BY THE STRUCTURAL ENGINEER SHALL BE REFUNDED TO THE OWNER PRIOR TO THE CLOSEOUT OF THE PROJECT.

4. ANY MODIFICATIONS, DELETIONS OR ELIMINATIONS TO THE STRUCTURAL BIDDING AND CONTINGENCY REQUIREMENTS, WITHOUT THE CONSENT OF THE STRUCTURAL ENGINEER, SHALL AUTOMATICALLY INDEMNIFY THE STRUCTURAL ENGINEER OF ANY COSTS THAT MAY ARISE DURING THE DESIGN AND CONSTRUCTION OF THE PROJECT.
5. WHERE DISCREPANCIES OCCUR WITHIN THE DRAWINGS THE CONTRACTOR WILL EITHER RESOLVE THE DISCREPANCIES WITH THE ARCHITECT BEFORE BIDDING OR INCLUDE THE GREATER COST ITEM IN THE BID AND RESOLVE THE DISCREPANCY PRIOR TO CONSTRUCTION.

NOTE TO CONTRACTOR REGARDING PRICING/BIDDING OF CITY SUBMITTAL DRAWINGS:

THESE DRAWINGS HAVE BEEN PREPARED FOR CITY SUBMITTAL, AND ARE NOT TO BE CONSIDERED 100% CONSTRUCTION DOCUMENTS UNTIL CITY PLAN REVIEW HAS BEEN COMPLETED AND FINAL BUILDING PERMIT HAS BEEN ISSUED. IF THESE DOCUMENTS ARE TO BE USED FOR PRICING, BID, OR STEEL MILL ORDER, THE CONTRACTOR SHALL PROVIDE IN THE PROJECT BUDGET AN ALLOWANCE FOR POTENTIAL CHANGES BETWEEN THE CITY SUBMITTAL DRAWINGS AND THE FINAL APPROVED SUBMITTAL AND CONSTRUCTION DOCUMENTS. ADDITIONALLY, MISCELLANEOUS ITEMS MAY NOT BE SHOWN ON THESE DRAWINGS. THESE ITEMS INCLUDE, BUT ARE NOT LIMITED TO, ELEVATOR AND EQUIPMENT SUPPORTS, BLOCKOUTS, ETC. REFER TO ARCHITECTURAL, MECHANICAL, ELECTRICAL, AND OTHER SPECIALTY DRAWINGS FOR ADDITIONAL INFORMATION. THE CONSTRUCTION BUDGET SHALL INCLUDE THESE ITEMS. THE STRUCTURAL ENGINEER WILL NOT BE RESPONSIBLE FOR CHANGE ORDER COSTS INCURRED (INCLUDING DISCARDED MATERIAL COSTS) DUE TO BIDDING OR STEEL MILL ORDER FROM THESE DRAWINGS. CONTACT STRUCTURAL ENGINEER FOR CLARIFICATION IF THE SCOPE AND QUANTITY OF ALLOWANCE TO BE CARRIED IS NOT CLEAR.

CONTRACTOR RESPONSIBILITY:

EACH CONTRACTOR OR SUB-CONTRACTOR RESPONSIBLE FOR THE CONSTRUCTION OF THE WIND AND/OR SEISMIC RESISTING SYSTEM THAT IS LISTED IN THE STATEMENT OF SPECIAL INSPECTIONS SHALL SUBMIT A WRITTEN STATEMENT OF RESPONSIBILITY TO THE BUILDING OFFICIAL AND THE OWNER PRIOR TO THE COMMENCEMENT OF WORK REQUIRING SPECIAL INSPECTION. THE CONTRACTOR'S STATEMENT OF RESPONSIBILITY SHALL CONTAIN ACKNOWLEDGMENT OF AWARENESS OF THE SPECIAL REQUIREMENTS CONTAINED IN THE STATEMENT OF SPECIAL INSPECTIONS.

DEFERRED SUBMITTALS: (PER 2012 IBC 107.3.4.1)

FOR THE PURPOSES OF THIS SECTION, DEFERRED SUBMITTALS ARE DEFINED AS THOSE PORTIONS OF THE DESIGN WHICH ARE NOT SUBMITTED AT THE TIME OF THE APPLICATION AND THAT ARE TO BE SUBMITTED TO THE BUILDING OFFICIAL WITHIN A SPECIFIED PERIOD.

DOCUMENTS FOR DEFERRED SUBMITTAL ITEMS SHALL BE SUBMITTED TO THE PROFESSIONAL IN RESPONSIBLE CHARGE FOR REVIEW. THE CONTRACTOR SHALL FORWARD THE REVIEWED DOCUMENTS TO BUILDING OFFICAL WITH A NOTATION INDICATING THAT THE DEFERRED SUBMITTAL DOCUMENTS HAVE BEEN REVIEWED AND BEEN FOUND TO BE IN GENERAL CONFORMANCE TO THE DESIGN OF THE BUILDING. THE DEFERRED SUBMITTAL ITEMS SHALL NOT BE INSTALLED UNTIL THE DESIGN AND SUBMITTAL DOCUMENTS HAVE BEEN APPROVED BY THE BUILDING OFFICIAL.

DEFERRED SUBMITTAL ITEMS:

ALUMINUM WALKWAY
GRATING
HANDRAILS/STAIRS
SHORING EXCAVATIONS
EQUIPMENT ATTACHMENTS, INCLUDING ADD'L FRAMING REQ'D

SPECIAL INSPECTION:

PER IBC CHAPTER 17, SPECIAL INSPECTION IS REQUIRED FOR THE FOLLOWING ITEMS:

CONCRETE:

VERIFICATION AND INSPECTION	CONTINUOUS	PERIODIC	REFERRENCED STANDARD (NOTE 1)	IBC REFERENCE
1. Inspection of reinforcing steel, including prestressing tendons, and placement.	–	X	ACI 318: Ch. 20, 25.2 25.3, 26.6.1–26.6.3	1908.4
2. Reinforcing bar welding: a. Verify weldability of reinforcing bars other than ASTM A706; b. Inspect single-pass fillet welds, maximum 5/16"; and c. Inspect all other welds.	– – X	X X –	AWS D1.4 ACI 318: 26.6.4	---
3. Inspect anchors to be installed in concrete prior to and during placement of concrete where allowable loads have been increased or where strength design is used.	–	X	ACI 318: 17.8.2	---
4. Inspection of anchors post-installed in hardened concrete members. a. Adhesive anchors installed in horizontally or upwardly inclined orientations to resist sustained tension loads. b. Mechanical anchors and adhesive anchors not defined in 4.a.	X –	– X	ACI 318: 17.8.2.4 ACI 318: 17.8.2	---
5. Verifying use of required design mix.	–	X	ACI318: Ch. 19, 26.4.3, 26.4.4	1904.1, 1904.2 1908.2, 1908.3
6. Prior to concrete placement, fabricate specimens for strength tests, per form slump and air content tests, and determine the temperature of the concrete.	X	–	ASTM C172 ASTM C31 ACI 318: 26.4, 26.12	1908.10
7. Inspection of concrete and shotcrete placement for proper application techniques.	X	–	ACI 318: 26.5	1908.6, 1908.7, 1908.8
8. Verify maintenance of specified curing temperature and techniques.	–	X	ACI 318: 26.5.3–26.5.5	1908.9
9. Inspect prestressed concrete for: a. Application of prestressing forces; and b. Grouting of bonded prestressing tendons	X X	– –	ACI 318: 26.10	--- ---
10. Inspect erection of precast concrete members.	–	X	ACI 318: Ch. 26.8	---
11. Verification of in-situ concrete strength, prior to stressing of tendons in post-tensioned concrete and prior to removal of shores and forms from beams and structural slab.	–	X	ACI 318: 26.11.2	---
12. Inspect formwork for shape, location and dimensions of the concrete member being formed.	–	X	ACI 318: 26.11.1.2(b)	---

NOTES:
1. WHERE APPLICABLE, SEE ALSO SECTION 1707.1, SPECIAL INSPECTION FOR SEISMIC RESISTANCE.
2. TABLES TAKEN DIRECTLY FROM IBC FOR REFERENCE.

MASONRY INSPECTION TASK	FREQUENCY (a) LEVEL 3	REFERENCE FOR CRITERIA TMS 402	TMS 602	IBC REFERENCE
1. As masonry construction begins, verify that the following are in compliance: a. Proportions of site-prepared mortar. b. Grade, type and size of reinforcement connectors and anchor bolts. c. Sample panel construction.	P P C		ART. 2.1, 2.6A, & 2.6C ART. 3.4 ART. 1.6D	
2. Prior to grouting, verify that the following are in compliance: a. Grout space. b. Placement of reinforcement, connectors, & anchor bolts. c. Proportions of site-prepared grout.	C C P	SEC. 6.1, 6.3.1, 6.3.6, & 6.3.7	ART. 3.2D & 3.2F ART. 3.2E & 3.4 ART. 2.6B & 2.4 G.1.b	
3. Verify compliance of the following during construction: a. Materials and procedures with the approved submittals. b. Placement of masonry units and mortar joint construction. c. Size and location of structural members. d. Type, size, and location of anchors, including other details of anchorage of masonry to structural members, frames, or other construction. e. Welding of reinforcement. f. Preparation, construction, and protection of masonry during cold weather (temperature below 40°F (4.4°C) or hot weather (temperature above 90°F (32.2°C). g. Placement of grout is in compliance.	P P P C C P C	SEC. 1.2.1(e), 6.2.1, & 6.3.1 SEC. 6.1.6.1.2	ART. 1.5 ART. 3.3B ART. 3.3F ART. 1.8C & 1.8D ART. 3.5	1705.04, 2104 & 2105
4. Observe preparation of grout specimens, mortar specimens, and/or prisms.	C		ART. 1.4 B.2.a.3, 1.4 B.2.b.3, 1.4 B.2.c.3, 1.4 b.3, & 1.4 B.4	

NOTES:
(a) Frequency refers to the frequency of inspection, which may be continuous during the listed task or periodically during the listed task, as defined in the table.
NR=Not Required, P=Periodic, C=Continuous
(b) Required for the first 5000 sq. ft. (465 sq. m.) of AAC masonry.
(c) Required after the first 5000 sq. ft. (465 sq. m.) of AAC masonry.

STEEL:

VERIFICATION AND INSPECTION	CONTINUOUS	PERIODIC	REFERENCED STANDARD (NOTE1)	IBC REFERENCE
1. Material verification of high-strength bolts, nuts and washers: a. Identification markings to conform to ASTM standards specified in the approved construction documents. b. Manufacturer's certificate of compliance required.	– –	X X	APPLICABLE ASTM MATERIAL SPECS AISC 360, SEC. A3.3	
2. Inspection of high-strength bolting: a. Bearing-type connections. AISC 360, Section M2.5 1704.3.3	–	X		
3. Material verification of structural steel: a. Identification markings to conform to ASTM standards specified in the approved construction documents. b. Manufacturers' certified mill test reports.	–	–	AISC 360, SEC. M2.5 ASTM A 6 OR ASTM A 568	
4. Material verification of weld filler materials: a. Identification markings to conform to AWS specification in the approved construction documents. b. Manufacturer's certificate of compliance required.	– –	– –	AISC 360, SEC. A3.5	
5. Inspection of welding: a. Structural steel: 1) Complete and partial penetration groove welds. 2) Multipass fillet welds. 3) Single-pass fillet welds > 5/16" 4) Single-pass fillet welds = 5/16" 5) Floor and roof deck welds. b. Reinforcing steel: 1) Verification of weld ability of reinforcing steel other than ASTM A 706. 2) Reinforcing steel-resisting flexural and Axial forces in intermediate and special Moment frames, and boundary elements of Special reinforced concrete shear walls and shear reinforcement. 3) Shear reinforcement. 4) Other reinforcing steel.	– X X X – – – – X X –	– – – – X X – X – – X	AWS D1.1 AWS D1.1 AWS D1.1 AWS D1.1 AWS D1.3 AWS D1.4 ACI 318: 3.5.2	
6. Inspection of steel frame joint details for compliance with approved construction documents: a. Details such as bracing and stiffening. b. Member locations. c. Application of joint details at each connection.	– – – –	X – – –		

NOTES:
1. WHERE APPLICABLE SEE ALSO SECTION 1701.1, SPECIAL INSPECTION FOR SEISMIC RESISTANCE.
2. TABLES TAKEN DIRECTLY FROM IBC FOR REFERENCE.

STEEL: CONSTRUCTION OTHER THAN STRUCTURAL STEEL: VERIFICATION AND INSPECTION	CONTINUOUS	PERIODIC	REFERENCED STANDARD (NOTE1)	IBC REFERENCE
1. Material verification of cold-formed steel deck: a. Identification markings to conform to ASTM standards specified in the approved construction documents. b. Manufacturer's certified test reports.	– –	X	APPLICABLE ASTM MATERIAL STANDARDS	
2. Inspection of welding: a. Cold formed steel deck: 1) Floor and roof deck welds. b. Reinforcing steel: 1) Verification of weldability of reinforcing steel other than ASTM A 706. 2) Reinforcing steel resisting flexural and axial forces in intermediate and special moment frames, and boundary elements of special structural walls of concrete and shear reinforcement. 3) Shear reinforcement. 4) Other reinforcing steel.	– – X – X	X X – X –	AWS D1.3 ACI 318: 3.5.2 AWS D1.4	

SOILS:	CONTINUOUS	PERIODIC		
1. Verify materials below shallow foundations are adequate to achieve the design bearing apacity.	–	X		
2. Verify excavations are extended to proper depth and have reached proper material.	–	X		
3. Perform classification and testing of compacted fill materials.	–	X		
4. Verify use of proper materials, densities and lift thicknesses during placement and compaction of compacted fill.	X	–		
5. Prior to placement of compacted fill, inspect subgrade and verify that site has been properly prepared.	–	X		

Not the responsibility of the structural engineer. Special inspection certificate to be completed by geotechnical engineer.

EXPANSION, SCREW, AND EPOXY BOLTS:	CONTINUOUS	PERIODIC		
1. During placement of all expansion, screw, & epoxy bolts, for visual verification of hole diameter and depth and placement of bolt and/or epoxy.	–	X		

DUTIES AND RESPONSIBILITIES OF THE SPECIAL INSPECTOR:

A) THE SPECIAL INSPECTOR SHALL OBSERVE THE WORK ASSIGNED TO BE CERTAIN IT CONFORMS WITH THE APPROVED DESIGN DRAWINGS AND SPECIFICATION.

B) THE SPECIAL INSPECTOR SHALL FURNISH INSPECTION REPORTS TO THE BUILDING OFFICIAL, AND TO THE ENGINEER.

C) UPON COMPLETION OF THE ASSIGNED WORK THE ENGINEER OR ARCHITECT SHALL COMPLETE AND SIGN THE APPROPRIATE FORMS CERTIFYING THAT TO THE BEST OF HIS KNOWLEDGE THE WORK IS IN CONFORMANCE WITH THE APPROVED PLANS AND SPECIFICATIONS AND THE APPLICABLE WORKMANSHIP PROVISIONS OF THE CODE.

ISSUED FOR BID

NO	BY	DATE	REVISIONS	DATE	APP.

Registered Professional Engineer (Civil) CERTIFICATE NO. 70374 JAMES APPLEYARD Date Signed 10/31/25 ARIZONA, U.S.A.

PREPARED BY: PKA
DESIGNED BY: JA
DRAWN BY: NS
CHECKED BY: JA
SCALE: AS NOTED
DATE SEP 2025
JOB NO. 23364

TITLE: GENERAL STRUCTURAL NOTES

JOB: TOWN OF JEROME WASTEWATER TREATMENT PLANT
YAVAPAI AZ

PREPARED BY: PACE Advanced Water Engineering
8723 E. VIA de COMMERCIO, SUITE A-204 | SCOTTSDALE, CA 85258
P: (408) 991-3595 | www.pacewater.com
TAYLOR B. PIERCE R.C.E 70097 DATE

SHEET S1.2
53 OF 99 SHEETS
JOB NO. 23364

THESE DRAWINGS ARE THE PROPERTY OF P.A.C.E. AND SHALL NOT BE REPRODUCED IN ANY MANNER NOR BE USED FOR CONSTRUCTION UNLESS STAMPED "ISSUED FOR CONSTRUCTION".

PK ASSOCIATES, LLC
6900 E. Belleview Ave. #200
Greenwood Village, Colorado 80111
Phone: (720) 799-1058
Email: cadd@pkastructural.com
Website: www.pkastructural.com

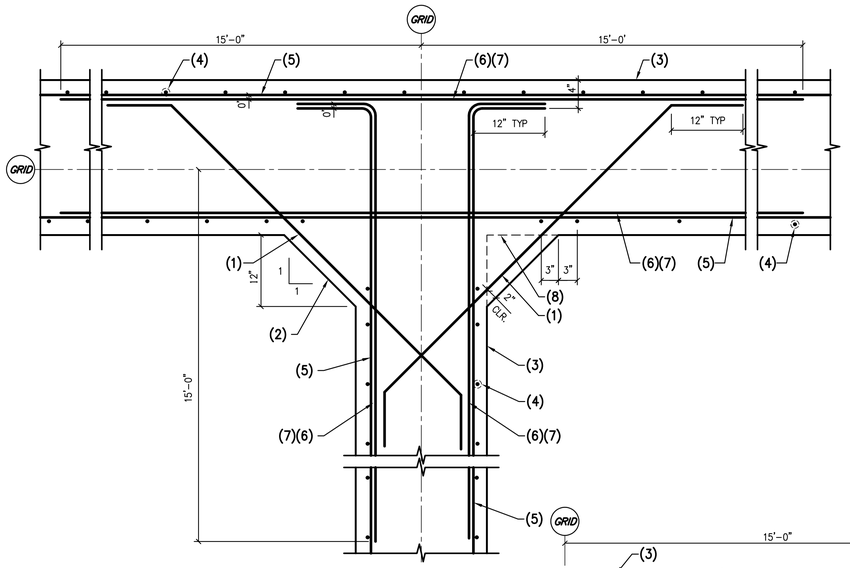

NOTES:
1. #4 AT 6" O.C. (NOT REQ'D AT 06A).
2. CHAMFER AT CORNER.
3. CONCRETE WALL.
4. VERTICAL WALL REINFORCING PER SHEET S3.1.
5. #6 AT 9" O.C. EACH FACE TYPICAL HORIZONTAL WALL REINFORCING. OPTION PROVIDE.
6. PROVIDE ADDITIONAL #6 AT 9" O.C. EACH FACE HORIZONTAL REINFORCING AT CORNERS (NET 4.5" O.C.).
7. PROVIDE ADDITIONAL HORIZONTAL REINFORCING FROM TOP OF WALL DOWN TO 5'-0" ABOVE MAT SLAB.
8. NO CHAMFER AT 06A.

BOLT DIAMETER	VERT BOLT EMBEDMENT LENGTH	HORIZ BOLT EMBEDMENT LENGTH	HEADED STUD FILLET WELD SIZE, "S".
1/2"	6"	4"	1/4"
5/8"	6"	4"	5/16"
3/4"	7"	5"	5/16"
7/8"	8"	6"	5/16"
1"	9"	7"	3/8"
1 1/8"	10"	8"	-----
1 1/4"	11"	9"	-----

NOTES:
PROVIDE ANCHORS, ANCHOR BOLTS AND EXPANSION BOLTS PER THIS SCHEDULE UNLESS NOTED ON PLANS OR DETAILS.

EXPANSION OR ADHESIVE BOLTS USED IN MASONRY SHALL HAVE I.C.B.O. APPROVAL IN MASONRY.

AT "ANCHORS" USE 3/16" FILLET WELD("S").

THICKNESS OF DRYPACK DOES NOT APPLY TOWARDS EMBEDMENT.

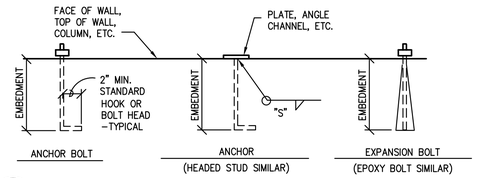

03 TYPICAL ANCHOR, ANCHOR BOLT, AND EXPANSION BOLT SCHEDULE
NO SCALE

STANDARD ASTM A615 (60 KSI) REBAR								
	CLASS B TENSION SPLICE LENGTHS						COMP. BARS	
CONC. PSI	f'c = 2,500 PSI/ f'c = 3,000 PSI		f'c = 4,000 PSI		f'c = 5,000 PSI AND HIGHER		f'c = ALL	
BAR LOCATION	REGULAR CLASS	TOP CLASS	REGULAR CLASS	TOP CLASS	REGULAR CLASS	TOP CLASS	STD LAP	ENCLOSED W/ SPIRAL TIES
SIZE								
#3	24"	31"	19"	24"	17"	22"	12"	12"
#4	32"	41"	25"	33"	23"	29"	15"	12"
#5	39"	51"	31"	41"	28"	36"	19"	14"
#6	47"	61"	37"	49"	34"	43"	23"	17"
#7	69"	89"	54"	71"	49"	63"	26"	20"
#8	78"	102"	62"	81"	56"	72"	30"	23"
#9	88"	115"	70"	91"	63"	81"	34"	25"
#10	100"	129"	79"	102"	70"	92"	38"	29"
#11	110"	143"	87"	113"	78"	102"	42"	32"

NOTES:
1. TOP BARS ARE ANY HORIZONTAL BARS PLACED SO THAT MORE THAN 12" OF FRESH CONCRETE IS CAST IN THE MEMBER BELOW THE REINFORCEMENT.
2. UNLESS NOTED OTHERWISE, LAP SPLICES IN CONCRETE BEAMS, SLABS AND WALLS SHALL BE CLASS "B" TENSION SPLICES. CONCRETE COLUMNS SHALL USE COMPRESSION LAP SPLICES.
3. CONTACT STRUCTURAL ENGINEER IF CENTER TO CENTER SPACING OF REINFORCING IS LESS THAN OR EQUAL TO 3 BAR DIAMETERS, <3db OR 2db CLEAR SPACING BETWEEN BARS.

01 LAP SCHEDULE FOR REINFORCING STEEL
NO SCALE

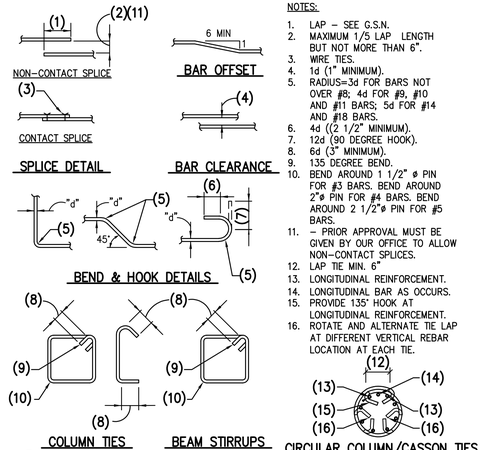

NOTES:
1. LAP – SEE G.S.N.
2. MAXIMUM 1/5 LAP LENGTH BUT NOT MORE THAN 6".
3. WIRE TIES.
4. 1d (1" MINIMUM).
5. RADIUS=3d FOR BARS NOT OVER #8; 4d FOR #9, #10 AND #11 BARS; 5d FOR #14 AND #18 BARS.
6. 4d ((2 1/2" MINIMUM).
7. 12d (90 DEGREE HOOK).
8. 6d (3" MINIMUM).
9. 135 DEGREE BEND.
10. BEND AROUND 1 1/2" ø PIN FOR #3 BARS. BEND AROUND 2"ø PIN FOR #4 BARS. BEND AROUND 2 1/2"ø PIN FOR #5 BARS.
11. – PRIOR APPROVAL MUST BE GIVEN BY OUR OFFICE TO ALLOW NON-CONTACT SPLICES.
12. LAP TIE MIN. 6"
13. LONGITUDINAL REINFORCEMENT.
14. LONGITUDINAL BAR AS OCCURS.
15. PROVIDE 135° HOOK AT LONGITUDINAL REINFORCEMENT.
16. ROTATE AND ALTERNATE TIE LAP AT DIFFERENT VERTICAL REBAR LOCATION AT EACH TIE.

04 TYPICAL CONCRETE REINFORCING BAR DETAILS
NO SCALE

STANDARD ASTM A615 (60 KSI) REBAR							
BAR SIZE	EMBEDMENT		EXTENSION		MINIMUM OUTSIDE DIAMETER OF BEND (INCHES)	CLASS A STRAIGHT BAR DEVELOPMENT	
	3000 PSI CONCRETE	5000 PSI CONCRETE & HIGHER	90° HOOK	180° HOOK		5000 PSI & HIGHER	3000 PSI
#3	6.00	6.00	4.5	2.5	3.00	13	17
#4	7.75	6.00	6.0	2.5	4.00	17	22
#5	9.75	7.50	7.5	2.5	5.00	22	28
#6	11.50	9.00	9.0	3.0	6.00	26	33
#7	13.50	10.50	10.5	3.5	7.00	38	48
#8	15.50	12.00	12.0	4.0	8.00	43	55
#9	17.50	13.50	13.75	4.75	11.28	48	62
#10	19.50	15.25	15.25	5.25	12.70	54	70
#11	21.75	16.75	17.00	5.75	14.10	60	78

NOTES:
1. EMBEDMENT LENGTH IS BASED ON 2 1/2" MINIMUM SIDE COVER AND 2" MINIMUM END COVER.
2. CONTACT STRUCTURAL ENGINEER IF CENTER TO CENTER SPACING OF REINFORCING IS LESS THAN OR EQUAL TO 3 BAR DIAMETERS <3db OR 2db CLEAR SPACING BETWEEN BARS.
3. WHERE CLEAR COVER <db, MULTIPLY EMBEDMENT AND STRAIGHT BAR DEVELOPMENT BY 1.5.

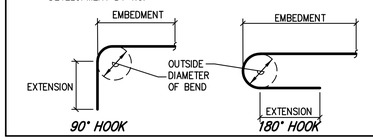

02 HOOKED DOWEL DEVELOPMENT LENGTH IN TENSION (INCHES)
NO SCALE

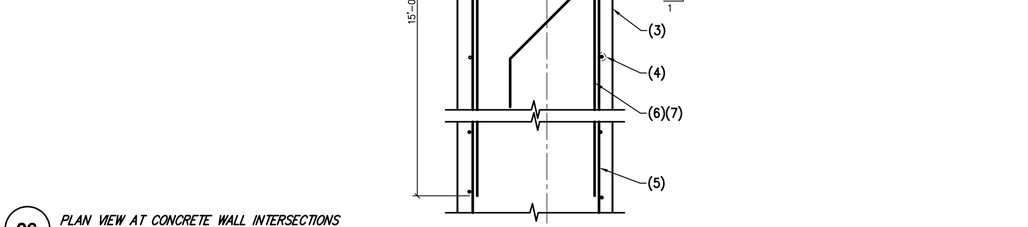

06 PLAN VIEW AT CONCRETE WALL INTERSECTIONS
06A AS NOTED
NO SCALE

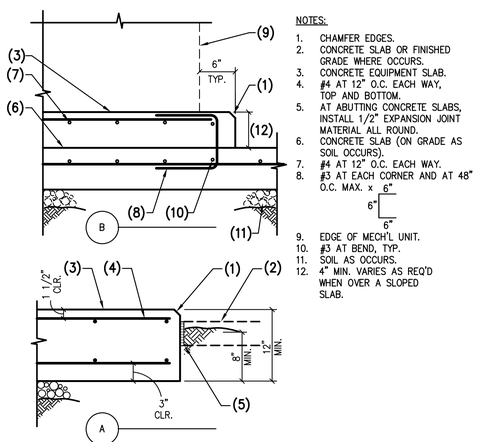

NOTES:
1. CHAMFER EDGES.
2. CONCRETE SLAB OR FINISHED GRADE WHERE OCCURS.
3. CONCRETE EQUIPMENT SLAB.
4. #4 AT 12" O.C. EACH WAY, TOP AND BOTTOM.
5. AT ABUTTING CONCRETE SLABS, INSTALL 1/2" EXPANSION JOINT MATERIAL ALL ROUND.
6. CONCRETE SLAB (ON GRADE AS SOIL OCCURS).
7. #4 AT 12" O.C. EACH WAY.
8. #3 AT EACH CORNER AND AT 48" O.C. MAX. x 6" 6" 6"
9. EDGE OF MECH'L UNIT.
10. #3 AT BEND, TYP.
11. SOIL AS OCCURS.
12. 4" MIN. VARIES AS REQ'D WHEN OVER A SLOPED SLAB.

08 CONCRETE EQUIPMENT PAD
NO SCALE

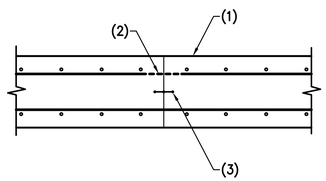

NOTES:
1. CONCRETE WALL.
2. CUT EVERY OTHER BAR ON EACH FACE OF WALL. STAGGER CUT BARS.
3. CONT. WATERSTOP, GREENSTREAK PVC RIBBED WITH CENTER BULB, MODEL #735 PER MECH'L, (OR APPROVED EQUAL.)

NOTE:
LOCATION OF VERTICAL WALL C.J. TO BE AT A MAXIMUM OF TWICE THE WALL HEIGHT.

07 PLAN – WALL C.J.
NO SCALE

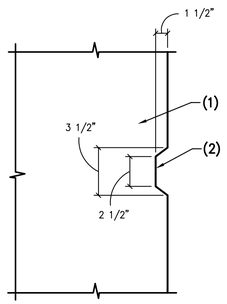

NOTES:
1. CONCRETE.
2. KEYED JOINT – REMOVE FORM MATERIAL PRIOR TO PLACING ADJACENT CONCRETE.

NOTE:
ALL DIMENSIONS ARE ± 1/2".

05 TYPICAL KEY IN CONCRETE
NO SCALE

NO	BY	DATE	REVISIONS	DATE	APP.

THESE DRAWINGS ARE THE PROPERTY OF P.A.C.E. AND SHALL NOT BE REPRODUCED IN ANY MANNER NOR BE USED FOR CONSTRUCTION UNLESS STAMPED "ISSUED FOR CONSTRUCTION".

Registered Professional Engineer (Civil) CERTIFICATE NO. 70374 JAMES APPLEYARD 10/31/25 Date Signed ARIZONA, U.S.A.

PREPARED BY: PKA
DESIGNED BY: JA
DRAWN BY: NS
CHECKED BY: JA
DATE: SEP 2025
JOB NO.: 23364
SCALE: AS NOTED

TITLE: TYPICAL DETAILS

JOB: TOWN OF JEROME WASTEWATER TREATMENT PLANT YAVAPAI AZ

ISSUED FOR BID

PREPARED BY:
PACE
Advanced Water Engineering
8723 E. VIA de VENTURA, SUITE 240, SCOTTSDALE, CA 85258
P: (480) 991-3995 | www.pacewater.com
TAYLOR B. PIERCE R.C.E 70097 DATE

SHEET S1.3
54 OF 99 SHEETS

JOB NO. 23364

PK ASSOCIATES, LLC
6900 E. Belleview Ave. #200
Greenwood Village, Colorado 80111
Phone: (720) 799-1058
Email: cadd@pkastructural.com
Website: www.pkastructural.com

NOMINAL BEAM DEPTH "D"	NUMBER OF 1" DIA. ASTM, F3125 BOLTS
UP TO 7"	2
8" – 11"	2
12" – 14"	3
15" – 17"	4
18" – 20"	5
21" – 23"	6
24" – 29"	7
30" – 32"	8
33" – 35"	9
36"	10

FRAMING NOTES:

1. THE TYPICAL STEEL BEAM TO STEEL COLUMN OR STEEL BEAM TO STEEL BEAM CONNECTION CONSISTS OF 3/8" SINGLE SHEAR PLATES WITH 1"ø. ASTM F3125 BOLTS. USE 5/8" SHEAR PLATES WHERE "D" = 27" OR GREATER.
2. ALL BOLTS SHALL BE INSTALLED USING SHORT SLOTTED HOLES IN EITHER THE BEAM WEB OR THE SHEAR PLATE PER LATEST AISC SPECIFICATIONS.

18 BOLT SCHEDULE FOR TYPICAL STEEL CONNECTIONS
NO SCALE

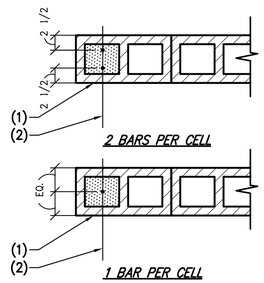

NOTES:

1. MASONRY WALL.
2. VERTICAL WALL REINFORCING.

NOTE:
SEE PLANS AND/OR TYPICAL DETAILS FOR NUMBER OF CELLS REINFORCED (GREATER REQUIREMENT GOVERNS).

15 TYPICAL REINFORCING PLACEMENT – EACH FACE
NO SCALE

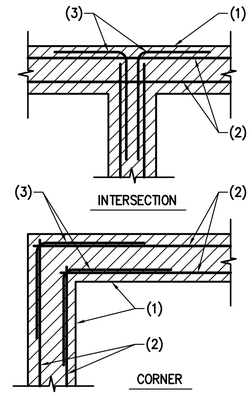

NOTES:

1. MASONRY WALL.
2. BOND BEAM REINFORCING.
3. CORNER BARS SAME SIZE AND SPACING AS HORIZONTAL REINFORCING – LAP PER G.S.N. (24" MINIMUM).

12 MASONRY BOND BEAM AT INTERSECTING WALLS
NO SCALE

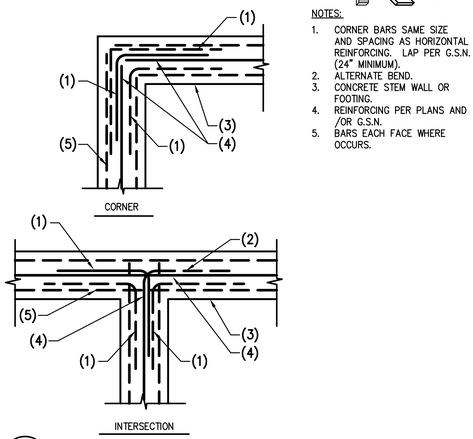

NOTES:

1. CORNER BARS SAME SIZE AND SPACING AS HORIZONTAL REINFORCING. LAP PER G.S.N. (24" MINIMUM).
2. ALTERNATE BEND.
3. CONCRETE STEM WALL OR FOOTING.
4. REINFORCING PER PLANS AND /OR G.S.N.
5. BARS EACH FACE WHERE OCCURS.

07 PLAN – CORNER REINFORCING IN CONCRETE GRADE BEAM WALL AND/OR FOOTING
NO SCALE

H	t	VERTICAL WALL REINFORCING		T	HEEL	TOE	FOOTING HEEL REINF.	SHEAR KEY		REMARKS
		WALL	DOWELS					Sd	Sw	
0'–0" TO 3'–0"	8"	#5 AT 18" O.C.	---	15"	0'–8"	0'–8"	---	---	---	SEE NOTE 1 & 2
3'–1" TO 5'–0"	8"	#5 AT 18" O.C.	---	12"	1'–1"	1'–1"	#5 AT 18" O.C.	12"	8"	SEE NOTE 1 & 2
5'–1" TO 7'–0"	8"	#5 AT 14" O.C.	---	12"	1'–7"	1'–6"	#5 AT 18" O.C.	24"	8"	SEE NOTE 1 & 2
7'–1" TO 9'–0"	8"	#5 AT 12" O.C.	#6 AT 12" O.C.	14"	2'–2"	2'–0"	#5 AT 12" O.C.	32"	8"	SEE NOTE 1 & 2
9'–1" TO 10'–0"	8"	#5 AT 12" O.C.	#7 AT 12" O.C.	20"	2'–8"	2'–6"	#5 AT 8" O.C.	32"	8"	SEE NOTE 1 & 2

NOTES:

1. USE #4 AT 12" O.C. HORIZONTALS.
2. LAP AND/OR EMBED ALL DOWELS 40 BAR DIAMETERS MINIMUM.

NOTE: REF DETAIL 20 FOR RETAINING WALLS ABOVE 10'–0" TALL

17 CONCRETE RETAINING WALL
NO SCALE

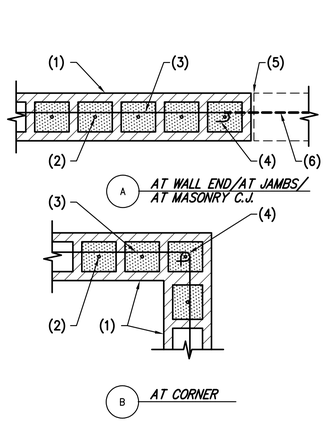

NOTES:

1. MASONRY WALL.
2. VERT. REINF. PER SCHEDULE.
3. HORIZ. REINF. PER SCHEDULE.
4. STANDARD HOOK PER TYP. DETAIL AT ENDS OF ALL WALLS.
5. MASONRY WALL AT C.J. AS OCCURS.
6. HORIZONTAL CONT. AT BOND BEAMS PER DETAIL 15.

16 PLAN VIEW – TYPICAL HORIZONTAL REINF. AT END OF WALL
NO SCALE

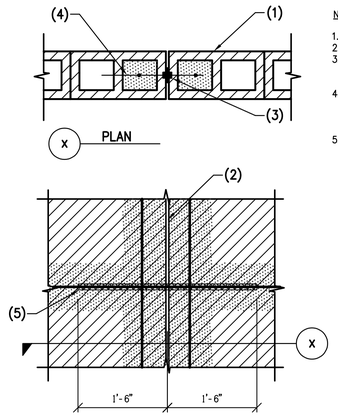

NOTES:

1. MASONRY WALL.
2. CONTROL JOINT.
3. CONTROL JOINT MATERIAL PER ARCHITECTURAL DRAWINGS AND SPECIFICATIONS.
4. 1 VERTICAL BAR EACH SIDE IN SOLID GROUTED CELLS TO MATCH VERTICAL WALL REINFORCING.
5. CONTINUOUS BOND BEAM BARS – WRAP BARS WITH MASTIC FOR BOND BREAK.

NOTE:
BOND BEAM BARS SHALL NOT BE LAPPED WITHIN 8'–0" OF CONTROL JOINT.

13 CONTROL JOINT IN MASONRY WALL
NO SCALE

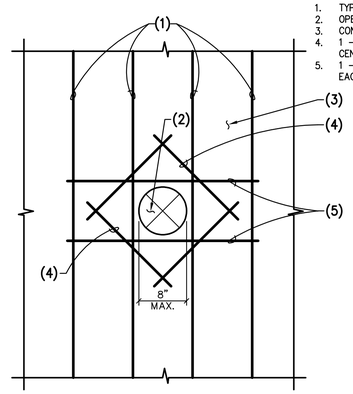

NOTES:

1. TYPICAL WALL REINF.
2. OPENING IN CONCRETE WALL.
3. CONCRETE WALL.
4. 1 – #5 DIAG. BARS IN THE CENTER OF WALL.
5. 1 – #5 TOP AND BOTTOM EACH FACE.

10 TYPICAL SMALL OPENING IN CONCRETE WALL
NO SCALE

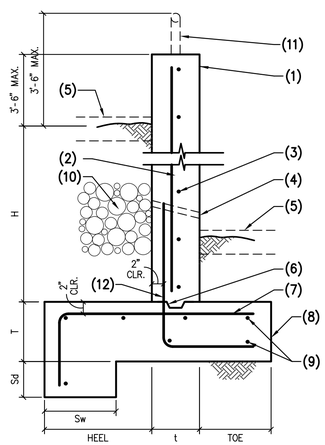

NOTES:

1. CONCRETE WALL.
2. VERTICAL WALL REINFORCING.
3. HORIZONTAL REINFORCING.
4. 1" DIA. WEEP HOLES AT 32" O.C.
5. FINISHED GRADE OR CONCRETE SLAB WHERE OCCURS.
6. CONTINUOUS KEY – SEE TYPICAL KEY IN CONCRETE DETAIL.
7. FOOTING HEEL REINFORCING.
8. CONCRETE FOOTING.
9. #4 AT 16" O.C.
10. 1 1/2" DIA. ROCK IN 12" X 12" X CONTINUOUS ROCK POCKET.
11. HANDRAIL ATTACHMENT BY OTHERS.
12. DOWELS TO MATCH AND LAP WALL REINFORCING U.N.O IN SCHEDULE.

17 CONCRETE RETAINING WALL
NO SCALE

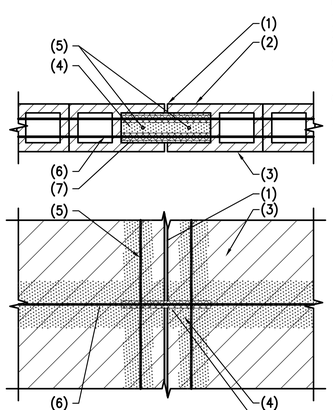

NOTES:

1. RAKE JOINT.
2. OPEN END MASONRY UNIT.
3. MASONRY WALL.
4. GROUT SOLID.
5. VERT. BAR EACH SIDE OF CONTROL JOINT TO MATCH VERT. WALL REINF.
6. HORIZ. REINF. CONT. THRU CONTROL JOINT.
7. WRAP HORIZ. BAR 8" EACH SIDE OF JOINT W/ MASTIC.

14 CONTROL JOINT IN MASONRY BEAM
NO SCALE

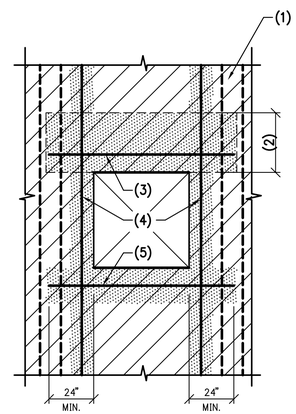

JAMB BARS	WALL OPENING
2	0'–0" → 4'–0"
3	4'–1" → 8'–0"
4	8'–1" → 10'–0"
5	10'–1" → 12'–0"
2 BARS IN FIRST 4 CELLS (8 BARS)	12'–1" → 16'–0"
2 BARS IN FIRST 6 CELLS (12 BARS)	16'–1" → 20'–0"
FOR OPENINGS LARGER THEN 20'–0" SEE PLAN. IF SPECIAL JAMB BARS ARE NOT SHOWN. USE WALL BRACES TO STRUCTURE.	

NOTES:

1. MASONRY WALL.
2. DEPTH OF MASONRY LINTEL BEAM – SEE PLANS AND DETAILS.
3. LINTEL REINFORCING.
4. VERTICAL BAR IN GROUTED CELL TO MATCH VERTICAL WALL REINFORCING – FULL HEIGHT OF WALL – SEE SCHEDULE BELOW, ONE BAR PER CELL.
5. 2 #5 BARS IN 8" DEEP SOLID GROUTED BOND BEAM – HOOK BARS UP AT CORNERS.

11 TYPICAL OPENING IN MASONRY WALL
NO SCALE

NO	BY	DATE	REVISIONS	DATE	APP.

Registered Professional Engineer (Civil)
CERTIFICATE NO.
70374
JAMES APPLEYARD
10/31/25
Date Signed
ARIZONA, U.S.A.

PREPARED BY: PKA
DESIGNED BY: JA
DRAWN BY: NS
CHECKED BY: JA
SCALE: AS NOTED
DATE: SEP 2025
JOB NO.: 23364

TITLE: TYPICAL DETAILS

JOB: TOWN OF JEROME
WASTEWATER
TREATMENT PLANT
YAVAPAI AZ

ISSUED FOR BID

PREPARED BY:
PACE
Advanced Water Engineering
8723 E. Via de Commercio, Suite A, Scottsdale, CA 85258
P: (408) 991-3595 | www.pacewater.com
TAYLOR B. PIERCE R.C.E 70097 DATE

SHEET
S1.4
55 OF 99 SHEETS

JOB NO. 23364

THESE DRAWINGS ARE THE PROPERTY OF P.A.C.E. AND SHALL NOT BE REPRODUCED IN ANY MANNER NOR BE USED FOR CONSTRUCTION UNLESS STAMPED "ISSUED FOR CONSTRUCTION".

PK ASSOCIATES, LLC
6900 E. Belleview Ave. #200
Greenwood Village, Colorado 80111
Phone: (720) 799-1058
Email: cadd@pkastructural.com
Website: www.pkastructural.com

NOTES:

1. 8" CONCRETE WALL.
2. #7 DOWELS AT 8" O.C.
3. #5 AT 12" VERTICALS.
4. #4 AT 12" HORIZONTALS.
5. 28" MIN.
6. L2x2x1/4 W/ 1/2"ø H.S. AT 18" O.C.
7. GRATING AND ATTACHMENT BY OTHERS.
8. L3x3x1/4 WITH 1/2" HILTI KWIK HUS EZ SCREW ANCHORS AT 24" O.C.
9. CONCRETE FOOTING W/ #5 AT 12" O.C. E.W. TOP & BOTTOM.
10. 1/2"x8"x5" STEEL PLATE WITH 2- 1/2"ø H.S. AT 5" O.C.
11. HANDRAIL AND ATTACHMENT BY OTHERS.
12. CONCRETE SLAB OR FINISHED GRADE AS OCCURS.
13. WATERSTOP PER PACE PER SPECIFICATION SECTION 03 1500.

19 CONCRETE RETAINING WALL AT CHLORINE CONTACT CHANNEL
NO SCALE

NOTES:

1. 8" CONCRETE WALL.
2. #5 AT 12" O.C.
3. #8 AT 12" O.C.
4. 1" DIA. WEEP HOLES AT 32" O.C.
5. FINISHED GRADE OR CONCRETE SLAB WHERE OCCURS.
6. CONTINUOUS KEY – SEE TYPICAL KEY IN CONCRETE DETAIL.
7. #5 AT 8" O.C.
8. CONCRETE FOOTING.
9. HANDRAIL ATTACHMENT BY OTHERS.
10. 1 1/2" DIA. ROCK IN 12" X 12" X CONTINUOUS ROCK POCKET.

20 12'-0" TALL RETAINING WALL
NO SCALE

NO	BY	DATE	REVISIONS	DATE	APP.

Registered Professional Engineer (Civil)
CERTIFICATE NO.
70374
JAMES APPLEYARD
10/31/25
Date Signed
ARIZONA, U.S.A.

PREPARED BY: PKA
DESIGNED BY: JA
DRAWN BY: NS
CHECKED BY: JA
SCALE: AS NOTED
DATE: SEP 2025
JOB NO.: 23364

TITLE: TYPICAL DETAILS

JOB: TOWN OF JEROME
WASTEWATER
TREATMENT PLANT
YAVAPAI AZ

ISSUED FOR BID

PREPARED BY:
PACE
Advanced Water Engineering
8723 E. VIA DE COMMERCIO, 1ST FLOOR, SCOTTSDALE, CA 85258
P: (480) 991-3595 | W: www.pacewater.com
TAYLOR B. PIERCE R.C.E. 70097 DATE

SHEET
S1.5
56 OF 99 SHEETS

JOB NO. 23364

THESE DRAWINGS ARE THE PROPERTY OF P.A.C.E. AND SHALL NOT BE REPRODUCED IN ANY MANNER NOR BE USED FOR CONSTRUCTION UNLESS STAMPED "ISSUED FOR CONSTRUCTION".

FOR GENERAL PRICING INFORMATION ONLY, COMPLETE DESIGN AND SHOP DRAWINGS TO BE SUPPLIED AND SUBMITTED BY STUD SUPPLIER

PK ASSOCIATES, LLC
6900 E. Belleview Ave. #200
Greenwood Village, Colorado 80111
Phone: (720) 799-1058
Email: cadd@pkastructural.com
Website: www.pkastructural.com

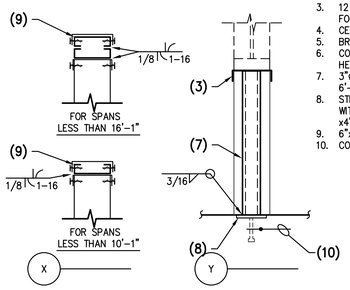

NOTES:
1. STEEL STUD.
2. STEEL HEADER PER SCHEDULE.
3. 12 GAGE STEEL STUD TRACK FOR SPANS LESS THAN 16'-1".
4. CEILING LINE.
5. BRACES PER DETAIL.
6. CONT. SPANDREL OPENING HEADER.
7. 3"ø. STEEL PIPE AT 6'-0" O.C.
8. STEEL PLATE 1/2"x5"x10" WITH 2- 1/2"ø HEADED STUDS x4" LONG AT 8" O.C.
9. 6"x16 GAGE (600 S200).
10. CONT. 1 #5 AT H.S.

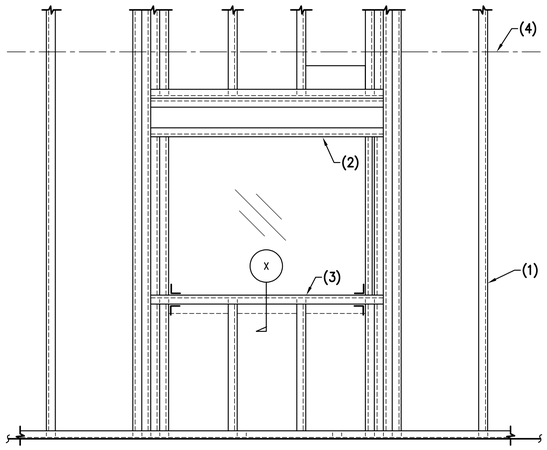

TYPICAL PUNCHED OPENING IN STUD WALL

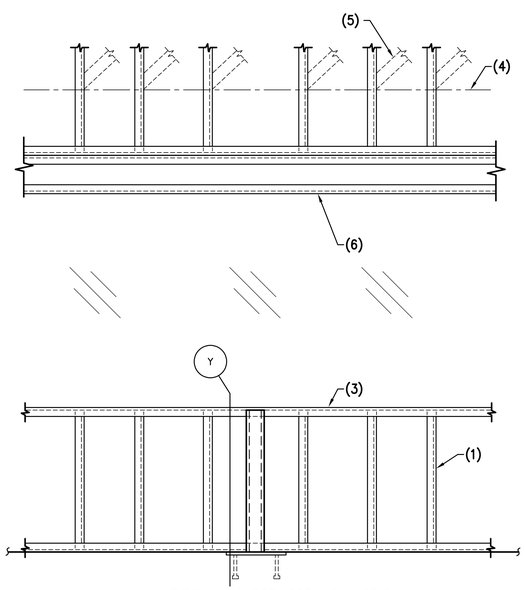

TYPICAL SPANDREL OPENING IN STUD WALL

CF7 TYPICAL OPENINGS IN STEEL STUD WALL

NO SCALE

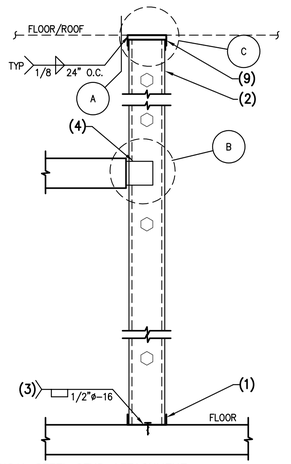

CF3 TYPICAL STEEL STUD ATTACHMENT

NO SCALE

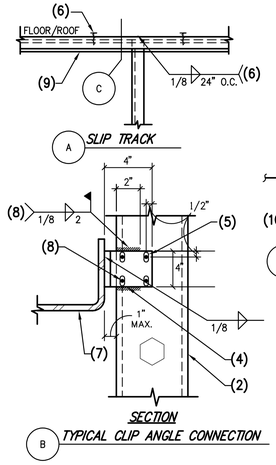

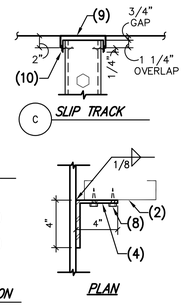

NOTES:
1. CONT. 16 GAGE "UNPUNCHED" STEEL TRACK. FOR ATTACHMENT SEE DETAIL 40.
2. STEEL STUD WALL.
3. USE 1/2"ø PUDDLE WELD AT 16" O.C. WHERE TRACK IS INSTALLED ON STEEL DECK (ROOF CONDITIONS).
4. STEEL CLIP ANGLE 4"x4"x12 GA. x 4" LONG AT EACH STUD.
5. PROVIDE 1" VERT. SLOTTED HOLE WHERE STUDS ARE FULL FLOOR HEIGHT.
6. HILTI SHOT PIN TO BOTTOM OF CONCRETE SLAB.
7. STEEL MEMBER (BENT PLATE AND BEAM FLANGE SHOWN OR CONTINUOUS EDGE ANGLE AT CONCRETE SLAB).
8. ALTERNATE TO WELD AT STUD TO CLIP ANGLE CONNECTION – 4 – #10 x 3/4" LONG SELF– TAPPING TEK SCREWS.
9. DEFLECTION TRACK TO ALLOW VERTICAL MOVEMENT – USE (2)– 16 GA. TRACKS BOTTOM TRACKS TO HAVE 2" LEGS. (ALLOW 3/4" DEFLECTION).
10. #10 x 3/4" LONG SELF–TAPPING SCREW EACH SIDE.

COLD FORMED STRUCTURAL STEEL FRAMING:

ALL COLD–FORMED STEEL FRAMING SHALL BE DESIGNED, FABRICATED AND ERECTED IN ACCORDANCE WITH MANUFACTURER'S RECOMMENDATIONS AND IN ACCORDANCE WITH THE LATEST EDITION OF "SPECIFICATIONS FOR THE DESIGN OF COLD–FORMED STEEL STRUCTURAL MEMBERS" BY THE AMERICAN IRON AND STEEL INSTITUTE.

STEEL FOR 14 AND 16 GAGE STUDS AND JOISTS, AND FOR ALL DIAGONAL TENSION STRAPS SHALL HAVE A MINIMUM YIELD STRENGTH OF 50 KSI. STEEL FOR ALL 18 AND 20 GAGE STUDS AND JOISTS, AND FOR ALL GAGES OF TRACK, ACCESSORIES AND BRIDGING SHALL HAVE A MINIMUM YIELD STRENGTH OF 33 KSI. STEEL SHALL BE GALVANIZED AT LOCATIONS EXPOSED TO WEATHER AND WHEREVER NOTED.

ALL STUD FRAMING (BOTH INTERIOR AND EXTERIOR) SHALL BE DESIGNED AND CONSTRUCTED TO ACCOMMODATE VERTICAL DEFLECTION OF THE STRUCTURE OF UP TO 1/2" LIVE LOAD DEFLECTION, UNLESS GREATER VALUE IS NOTED ON PLANS OR DETAILS. UTILIZE SLIP TRACK OR OTHER SIMILAR MEANS.

ALL STUDS SHALL BE SECURELY SEATED FOR FULL END BEARING ON TOP AND BOTTOM TRACK. UNLESS NOTED OTHERWISE, PROVIDE DOUBLE STUDS AT ALL JAMBS, CORNERS, INTERSECTIONS, BEAM BEARINGS AND JOIST BEARINGS. BRIDGING SHALL BE INSTALLED PER MANUFACTURER'S RECOMMENDATION WITH THE FOLLOWING MINIMUM REQUIREMENTS.

FOR WALLS WITH NO AXIAL LOAD, PROVIDE BRIDGING AT MID–HEIGHT FOR WALLS LESS THAN OR EQUAL TO 10'–0" HIGH, AND 5'–0" O.C. MAXIMUM FOR WALLS GREATER THAN 10'–0" HIGH. FOR AXIAL LOAD BEARING WALLS, PROVIDE BRIDGING EQUALLY SPACED AT 4'–0" MAXIMUM. IN ADDITION, BRIDGING SHALL BE PROVIDED AT ROOF LINES AND ELSEWHERE AS NOTED ON THE DRAWINGS. SOLID BLOCKING SHALL BE INSTALLED IN LIEU OF BRIDGING WHERE NOTED ON THE DRAWINGS.

STEEL STUD DETAILS AND GAGES DEPICATED ON STRUCTURAL DRAWINGS SHOW GENERAL STRUCTURAL REQUIREMENTS AND ARE FOR SCHEMATICS PURPOSE ONLY. THE CONTRACTOR SHALL BE REQUIRED TO SUBMIT SHOP DRAWINGS WITH DESIGN CALCULATIONS SEALED BY A REGISTERED ENGINEER FOR ALL STEEL STUD FRAMING AND ANY ADDITIONAL FRAMING MATERIALS REQUIRED FOR COMPLETE DESIGN SHALL BE INCORPORATED. CALCULATIONS SHALL INCLUDE DERIVATION OF WND LOADS PER SPECIFIED BUILDING CODE.

ALL WELDING SHALL BE PERFORMED BY WELDERS EXPERIENCED IN LIGHT GAGE STRUCTURAL STEEL FRAMING WORK. DO NOT NOTCH FLANGES OF JOISTS OR STUDS. DOUBLE UP FLOOR JOISTS AND BLOCKING UNDER PARTITIONS. PROVIDE BLOCKING AT SUPPORTS OF ALL JOISTS. DOUBLE UP STUDS AT JAMBS AND AS REQUIRED UNDER BEAMS IN BEARING WALLS.

TYPICAL STUDS SHALL BE DESIGNED FOR L/360 EXCEPT STUDS SUPPORTING VENEER SHALL BE DESIGN FOR MAXIMUM DEFLECTION OF L/600.

STEEL STUD SUPPLIER SHALL DESIGN AND SUPPLY STRUCTURAL STEEL AS REQUIRED FOR COMPLETE CONSTRUCTION OF VERTICAL WALL AWNINGS, SOFFITS, WING PLATES, FASCIA EXTENSIONS, ETC. ANY "RED METAL" OF FABRICATED STRUCTURAL STEEL REQUIRED TO COMPLETE WALL SYSTEMS SHALL BE DESIGNED AND INSTALLED BY STEEL STUD SUPPLIER.

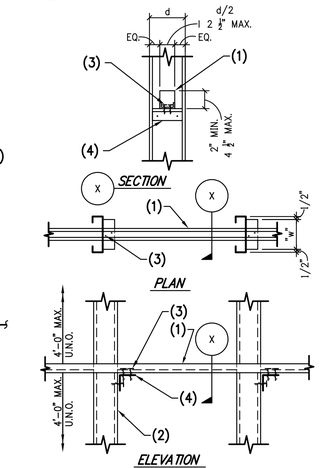

NOTES:
1. 1 1/2"x16GA.x 1/2" FLANGE CRC CONTINUOUS.
2. STUDS PER PLAN.
3. 2– #10 TEK SCREWS AT EACH STUD.
4. SIMPSON 'MSUBH3.25' CLIP WITH 2– #10 TEK SCREWS TO STUDS. ALT: L2x2x16GA.x 0'–5" LONG CLIP.

NOTE:
– 3– CRC BRIDGING PER FLOOR SEE TYPICAL DETAIL 56.
– AT LOCATIONS WHERE CRC IS INTERRUPTED SEE TYPICAL DETAIL 57.
– FOR TYPICAL NON–STRUCTURAL WALL BRIDGING SEE TYPICAL DETAIL 64.

CF6 TYPICAL BRIDGING DETAIL

NO SCALE

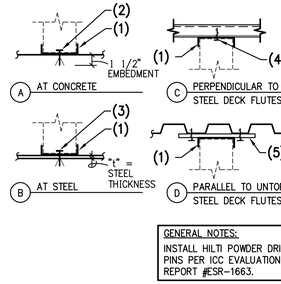

GENERAL NOTES:
INSTALL HILTI POWDER DRIVEN PINS PER ICC EVALUATION REPORT #ESR–1663.

NOTES:
1. STEEL TRACK. DEFLECTION TRACK AS OCCURS.
2. 3/8"ø SIMPSON DROP IN ANCHOR PER SCHEDULE.
3. 0.145ø HILTI X–EDNI POWDER DRIVEN PINS PER SCHEDULE. FOR "t"<1/2", FASTENERS MUST PENETRATE THRU STEEL BASE MATERIAL. FOR "t"=1/2", FASTENERS MUST PENETRATE 9/16" MIN. FOR "t">3/4", FASTENERS MUST PENETRATE 7/16" MIN.
4. #10x3/4" LONG TEKS SCREW PER SCHEDULE.
5. 12"x12x20 GAGE STEEL PLATE WITH 4 #10x 3/4" LONG TEKS SCREWS (ONE EACH CORNER). PLATE SPACING PER SCHEDULE.

TYPICAL TRACK ATTACHMENT

KEY	TYPE A	TYPE B	TYPE C	TYPE D
	ANCHOR SPACING	PIN SPACING	SCREW SPACING	PLATE SPACING
EXTERIOR	12" O.C.	12" O.C.	2 ROWS AT 6" O.C. (4" O.C. ROW SPACING)	12" O.C. (CONT. 12" WIDE PLATE)
INTERIOR	24" O.C.	16" O.C.	12" O.C.	48" O.C.

CF4 TYPICAL STEEL TRACK AT STRUCTURE

NO SCALE

MIN. STEEL STUD PROPERTIES GROSS

SIZE	GAGE	DESIGNATION	Sx(IN^3)	Ix(IN^4)	Fy (KSI)	SPACING	REMARKS L/360	REMARKS L/600
EXTERIOR								
8"	12	800S200–97	2.801	11.203	50	16" O.C.	27'–7"	23'–3"
8"	16	800S200–68	2.035	8.140	50	16" O.C.	24'–10"	20'–11"
6"	12	600S200–97	1.871	5.612	50	16" O.C.	21'–11"	18'–6"
6"	16	600S200–54	1.106	3.319	50	16" O.C.	18'–5"	15'–6"
6"	18	600S162–43	0.767	2.316	33	16" O.C.	16'–4"	13'–9"
6"	20	600S162–33	0.577	1.793	33	16" O.C.	13'–9"	12'–8"
INTERIOR								
6"	20–STRUCTURAL	600S162–33	0.598	1.793	33	16" O.C.	24'–0"	22'–0"
6"	20–STRUCTURAL	600S125–33	0.470	1.479	33	16" O.C.	22'–0"	20'–0"
ALL TRACKS SHALL BE SAME GAGE AS STUDS (18 GAGE MIN) W/ 2" FLANGE								

CF1 MINIMUM STEEL STUD PROPERTIES

NO SCALE

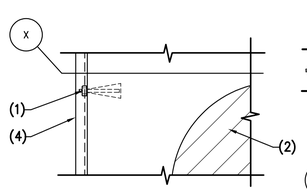

NOTES:
1. 1/2"ø EXP. BOLTS AT 24" O.C. DO NOT CUT VERTICAL REINFORCING.
2. CONCRETE OR MASONRY WALL.
3. LINE OF STEEL STUD WALL AS OCCURS.
4. STEEL STUDS.

CF5 TYPICAL STEEL STUD AT CONCRETE OR MASONRY WALL

NO SCALE

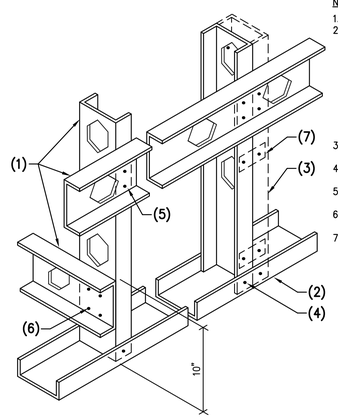

NOTES:
1. STEEL STUD.
2. UNPUNCHED STEEL STUD TRACK – ATTACHMENT REQUIRED 1 HILTI 3/4" LONG X–U TYPE POWDER DRIVEN PINS @ 8" O.C. (I.C.C. #ERS–1663) OR APPROVED EQUAL FOR ALL STUDS 6" OR SMALLER. FOR 8" STUDS USE 2 PINS AT 8: O.C. – TYP. U.N.O.
3. MULTIPLE STUDS WHERE SHOWN ON PLAN OR DETAILS.
4. #10x3/4" LONG TEKS SCREWS EACH SIDE.
5. 2 #10x3/4" LONG TEKS SCREWS.
6. 4 #10x3/4" LONG TEKS SCREWS.
7. 2"x20 GAGE FLAT STRAP BOTH SIDES AT 24" O.C. WITH 1 #10 SCREW AT EACH VERTICAL STUD.

CF2 TYPICAL STEEL STUD WALL – SCREW CONNECTION

NO SCALE

								APP.
								DATE
								REVISIONS
								DATE
								BY
								NO

Registered Professional Engineer
CERTIFICATE NO.
70374
JAMES
APPLEYARD
10/31/25
Date Signed
ARIZONA, U.S.A.

PREPARED BY: PKA
DESIGNED BY: JA
DRAWN BY: NS
CHECKED BY: JA
SCALE: AS NOTED
DATE: SEP 2025
JOB NO. 23364

THESE DRAWINGS ARE THE PROPERTY OF P.A.C.E. AND SHALL NOT BE REPRODUCED IN ANY MANNER NOR BE USED FOR CONSTRUCTION UNLESS STAMPED "ISSUED FOR CONSTRUCTION".

TITLE: TYPICAL DETAILS

JOB: TOWN OF JEROME
WASTEWATER
TREATMENT PLANT
YAVAPAI AZ

ISSUED FOR BID

PREPARED BY:
PACE
Advanced Water Engineering
8723 E. VIA de VENTURA, SUITE A-140, SCOTTSDALE, CA 85258
P: (480) 991-3555 | www.pacewater.com
TAYLOR B. PIERCE R.C.E 70097 DATE

SHEET
S1.6
57 OF 99 SHEETS

JOB NO. 23364

FOR GENERAL PRICING INFORMATION ONLY, COMPLETE DESIGN AND SHOP DRAWINGS TO BE SUPPLIED AND SUBMITTED BY STUD SUPPLIER

PK ASSOCIATES, LLC
6900 E. Belleview Ave. #200
Greenwood Village, Colorado 80111
Phone: (720) 799-1058
Email: cadd@pkastructural.com
Website: www.pkastructural.com

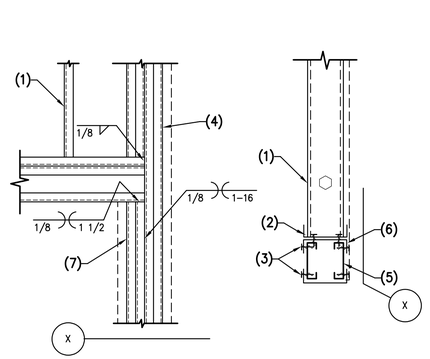

NOTES:

1. STEEL STUD WALL.
2. CONT. 16 GAGE TRACK W/ 2 – #12 TEK SCREWS AT 12" O.C. STAGGERED THROUGH TRACKS TO STUDS BELOW.
3. #12 TEK SCREWS AT 12" O.C., EACH LEG OF TRACK.
4. 2 (FULL HEIGHT) JAMB STUDS MIN. REFER TO SCHEDULE BELOW FOR ADDITIONAL STUDS WHERE REQUIRED.
5. STEEL HEADER PER SCHEDULE.
6. CONT. STEEL TRACK – TOP AND BOTTOM. REFER TO SCHEDULE FOR HEAVIER GAGE WHERE REQUIRED.
7. DOUBLE TRIMMER STUD, 16 GA. MIN. (ADD ONE ADDITIONAL STUDS AT EVERY 4'–0" OPENING. INCREASE AFTER 6'–0" WIDE).
8. TYPICAL PINS OR SCREWS AT 2" O.C. EACH SIDE FOR EVERY STUD IN THE GROUP.
9. TYPICAL CLIP ANGLE, ONE FOR EVERY TWO STUDS.

NOTE:

– FOR OPENING LARGER THAN SHOWN – SEE FRAMING PLAN
– ALL HEADER'S STUDS AND TRACKS SHALL BE UNPUNCHED MEMBERS.

OPENING	EXTERIOR WALLS		INTERIOR WALLS			
	HEADER SIZE (6" WALL)	JAMB STUDS (6" WALL)	HEADER SIZE		JAMB STUDS	
			4" WALL	6" WALL	4" WALL	6" WALL
0" – 4'–0"	2– 6"x20 GA (600S137–33) STUDS AND 2– 6"x18 GA (600T125–43) TRACKS	2– 6"x16 GA (600S200–54)	2– 6"x20 GA (600S137–33) STUDS AND 2– 4"x18 GA (400T125–43) TRACKS	2– 6"x20 GA (600S137–33) STUDS AND 2– 6"x18 GA (600T125–43) TRACKS	2– 4"x20 GA (400S137–33)	2– 6"x20 GA (600S137–33)
4'–1" – 6'–0"	2– 6"x20 GA (600S137–33) STUDS AND 2– 6"x18 GA (600T125–43) TRACKS	2– 6"x16 GA (600S200–54)	2– 6"x20 GA (600S137–33) STUDS AND 2– 4"x18 GA (400T125–43) TRACKS	2– 6"x20 GA (600S137–33) STUDS AND 2– 6"x18 GA (600T125–43) TRACKS	2– 4"x20 GA (400S137–33)	2– 6"x20 GA (600S137–33)
6'–1" – 8'–0"	2– 6"x18 GA (600S162–43) STUDS AND 2– 6"x18 GA (600T125–43) TRACKS	2– 6"x16 GA (600S200–54)	2– 6"x20 GA (600S137–33) STUDS AND 2– 4"x18 GA (400T125–43) TRACKS	2– 6"x20 GA (600S137–33) STUDS AND 2– 6"x18 GA (600T125–43) TRACKS	2– 4"x20 GA (400S137–33)	2– 6"x20 GA (600S137–33)
8'–1" – 10'–0"	2– 6"x16 GA (600S200–54) STUDS AND 2– 6"x18 GA (600T125–43) TRACKS	3– 6"x16 GA (600S200–54)	2– 6"x20 GA (600S137–33) STUDS AND 2– 4"x18 GA (400T125–43) TRACKS	2– 6"x20 GA (600S137–33) STUDS AND 2– 6"x18 GA (600T125–43) TRACKS	2– 4"x20 GA (400S137–33)	2– 6"x20 GA (600S137–33)
10'–1" – 12'–0"	3– 6"x16 GA (600S250–54) STUDS AND 2– 6"x16 GA (600T200–54) TRACKS	3– 6"x16 GA (600S200–54)	3– 6"x20 GA (600S137–33) STUDS AND 2– 4"x16 GA (400T150–54) TRACKS	3– 6"x20 GA (600S137–33) STUDS AND 2– 6"x18 GA (600T125–43) TRACKS	2– 4"x20 GA (400S137–33)	2– 6"x20 GA (600S137–33)
12'–1" – 14'–0"	3– 8"x16 GA (800S250–54) STUDS AND 2– 6"x14 GA (600T200–68) TRACKS	4– 6"x16 GA (600S200–54)	3– 8"x20 GA (800S137–33) STUDS AND 2– 4"x16 GA (400T200–54) TRACKS	3– 8"x20 GA (800S137–33) STUDS AND 2– 6"x18 GA (600T125–43) TRACKS	2– 4"x20 GA (400S137–33)	2– 6"x20 GA (600S137–33)
14'–1" – 16'–0"	3– 8"x14 GA (800S200–68) STUDS AND 3– 6"x14 GA (600T200–68) TRACKS	5– 6"x16 GA (600S200–54)	3– 8"x18 GA (800S137–43) STUDS AND 3– 4"x16 GA (400T200–54) TRACKS	3– 8"x18 GA (800S137–43) STUDS AND 2– 6"x18 GA (600T125–43) TRACKS	2– 4"x20 GA (400S162–33)	2– 6"x20 GA (600S137–33)
CONTINUOUS SPANDREL OPENING	2– 6"x18 GA (600S162–43) STUDS AND 2– 6"x18 GA (600T125–43) TRACKS	N/A USE BRACE PER DETAIL	2– 6"x20 GA (600S137–33) STUDS AND 2– 4"x18 GA (400T125–43) TRACKS	2– 6"x20 GA (600S137–33) STUDS AND 2– 6"x18 GA (600T125–43) TRACKS	N/A USE BRACE PER DETAIL	N/A USE BRACE PER DETAIL
DESIGN HEIGHT IS 16'–0" OR LESS, IF GREATER HEIGHT REQUIRED USE BRACES ACROSS OPENING. VERIFY BRACES ARE ABOVE CEILING LINE.						

CF6 *HEADER IN NON–BEARING STEEL STUD WALL*

NO SCALE

NO	BY	DATE	REVISIONS	DATE	APP.

THESE DRAWINGS ARE THE PROPERTY OF P.A.C.E. AND SHALL NOT BE REPRODUCED IN ANY MANNER NOR BE USED FOR CONSTRUCTION UNLESS STAMPED "ISSUED FOR CONSTRUCTION".

Registered Professional Engineer (Civil) CERTIFICATE NO. 70374 JAMES APPLEYARD 10/31/25 Date Signed ARIZONA, U.S.A.

PREPARED BY: PKA
DESIGNED BY: JA
DRAWN BY: NS
CHECKED BY: JA
SCALE: AS NOTED
DATE: SEP 2025
JOB NO.: 23364

TITLE: **TYPICAL DETAILS**

JOB: TOWN OF JEROME WASTEWATER TREATMENT PLANT
YAVAPAI AZ

ISSUED FOR BID

PREPARED BY:
PACE
Advanced Water Engineering
8723 E. Via de Ventura Suite 260 | SCOTTSDALE, CA 85258
P: (480) 991-3995 | www.paceadvisor.com
TAYLOR B. PIERCE R.C.E 70097 DATE

SHEET
S1.7
58 OF 99 SHEETS

JOB NO. 23364

PK ASSOCIATES, LLC
6900 E. Belleview Ave. #200
Greenwood Village, Colorado 80111
Phone: (720) 799-1058
Email: cadd@pkastructural.com
Website: www.pkastructural.com

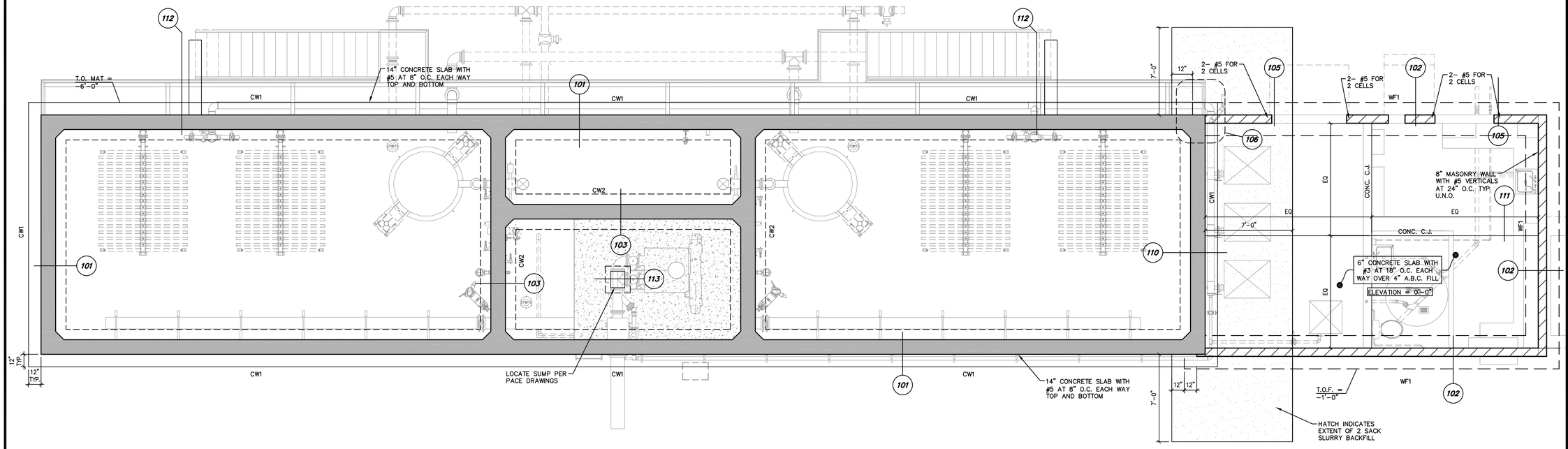

1 FOUNDATION PLAN

SCALE: 1/4"=1'-0"

CONCRETE WALL (CW) SCHEDULE

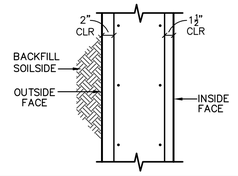

MARK	t	VERTICAL REINF. INSIDE FACE	VERTICAL REINF. OUTSIDE FACE	HORIZONTAL REINF. INSIDE FACE	HORIZONTAL REINF. OUTSIDE FACE	REMARKS
CW1	14"	#9 AT 6" O.C.	#5 AT 8" O.C.	#5 AT 8" O.C.	#5 AT 8" O.C.	TYP. U.N.O.
CW2	14"	#9 AT 6" O.C.	#9 AT 6" O.C.	#5 AT 8" O.C.	#5 AT 8" O.C.	TYP. U.N.O.

*NOTE: AT BOTTOM OF ALL WALLS PROVIDE SPECIAL HORIZONTAL REINFORCING AND U-BARS AT SHOWN IN DETAILS 119 AND 120 -TYPICAL

CONTINUOUS FOOTING (WF) SCHEDULE

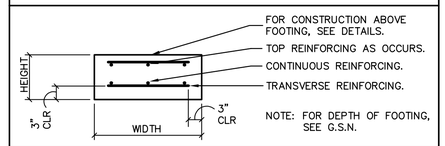

MARK	DIMENSIONS HEIGHT	DIMENSIONS WIDTH	FOOTING REINFORCING	REMARKS
WF1	12"	2'-6"	3- #5 CONTINUOUS	---

ISSUED FOR BID

PREPARED BY: PACE
Advanced Water Engineering
8723 E. Via de Commercio, Suite 1, SCOTTSDALE, CA 85258
P: (480) 991-3595 | www.pacewater.com
TAYLOR B. PIERCE R.C.E 70097 DATE

NO	BY	DATE	REVISIONS	DATE	APP.

Registered Professional Engineer (Civil) CERTIFICATE NO. 70374 JAMES APPLEYARD 10/31/25 Date Signed ARIZONA, U.S.A.

PREPARED BY:	PKA
DESIGNED BY:	JA
DRAWN BY:	NS
CHECKED BY:	JA
SCALE:	AS NOTED
DATE	SEP 2025
JOB NO.	23364

TITLE: FOUNDATION PLAN

JOB: TOWN OF JEROME WASTEWATER TREATMENT PLANT YAVAPAI AZ

SHEET S2.00
59 OF 99 SHEETS

JOB NO. 23364

THESE DRAWINGS ARE THE PROPERTY OF P.A.C.E. AND SHALL NOT BE REPRODUCED IN ANY MANNER NOR BE USED FOR CONSTRUCTION UNLESS STAMPED "ISSUED FOR CONSTRUCTION".

PK ASSOCIATES, LLC
6900 E. Belleview Ave. #200
Greenwood Village, Colorado 80111
Phone: (720) 799-1058
Email: cadd@pkastructural.com
Website: www.pkastructural.com

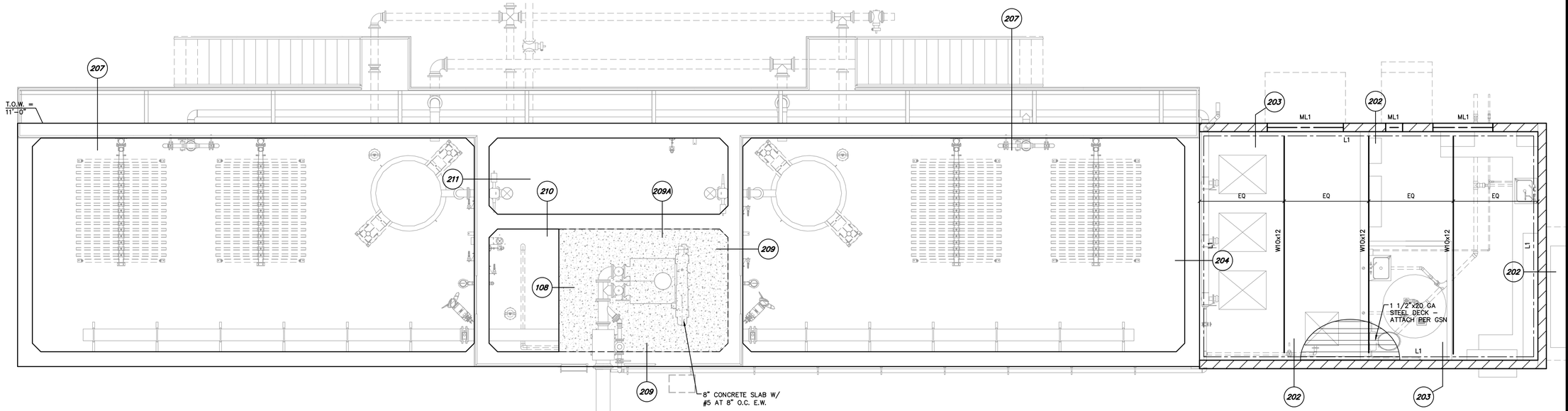

1 FRAMING PLAN

SCALE: 1/4"=1'-0"

LEDGER (L) SCHEDULE

STEEL: 1. ALL LEDGERS SHALL HAVE MINIMUM OF 2 WELD PLATES OR ANCHOR BOLTS AS NOTED BELOW.
2. WELD PLATES OR ANCHOR BOLTS SHALL BE LOCATED NOT LESS THAN 6" NOR MORE THAN 1'-4" FROM END OF LEDGER OR LEDGER SPLICE.

MARK	SIZE / TYPE	CONNECTION
L1	L4x4x1/4"	EMBED PER DETAIL 202 AND 204 AT 48" O.C.

MASONRY LINTEL (ML) SCHEDULE

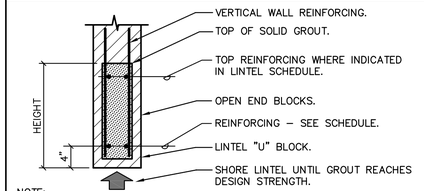

NOTE:
1. VERTICAL REINFORCING TO MATCH AND LAP WALL REINFORCING PER G.S.N.
2. EXTEND GROUT, OPEN END MASONRY UNITS AND REINFORCING 2'-0" PAST EACH JAMB. USE CORNER BARS WHERE 2'-0" CANNOT BE ACHIEVED.

MARK	HEIGHT	REINFORCING	REMARKS
ML1	16"	2- #5 BOTTOM	---

NO	BY	DATE	REVISIONS	DATE	APP.

Registered Professional Engineer (Civil) CERTIFICATE NO. 70374 JAMES APPLEYARD Date Signed 10/31/25 ARIZONA, U.S.A.

PREPARED BY: PKA
DESIGNED BY: JA
DRAWN BY: NS
CHECKED BY: JA
SCALE: AS NOTED
DATE: SEP 2025
JOB NO.: 23364

THESE DRAWINGS ARE THE PROPERTY OF P.A.C.E. AND SHALL NOT BE REPRODUCED IN ANY MANNER NOR BE USED FOR CONSTRUCTION UNLESS STAMPED "ISSUED FOR CONSTRUCTION".

TITLE: FRAMING PLAN

JOB: TOWN OF JEROME WASTEWATER TREATMENT PLANT — YAVAPAI AZ

ISSUED FOR BID

PREPARED BY: PACE Advanced Water Engineering
8723 E. VIA de VENTURA, STE. 290 | SCOTTSDALE, CA 85258
P: (480) 991-3595 | www.paceadvisor.com
TAYLOR B. PIERCE R.C.E 70097 DATE

SHEET S2.01
60 OF 99 SHEETS

JOB NO. 23364

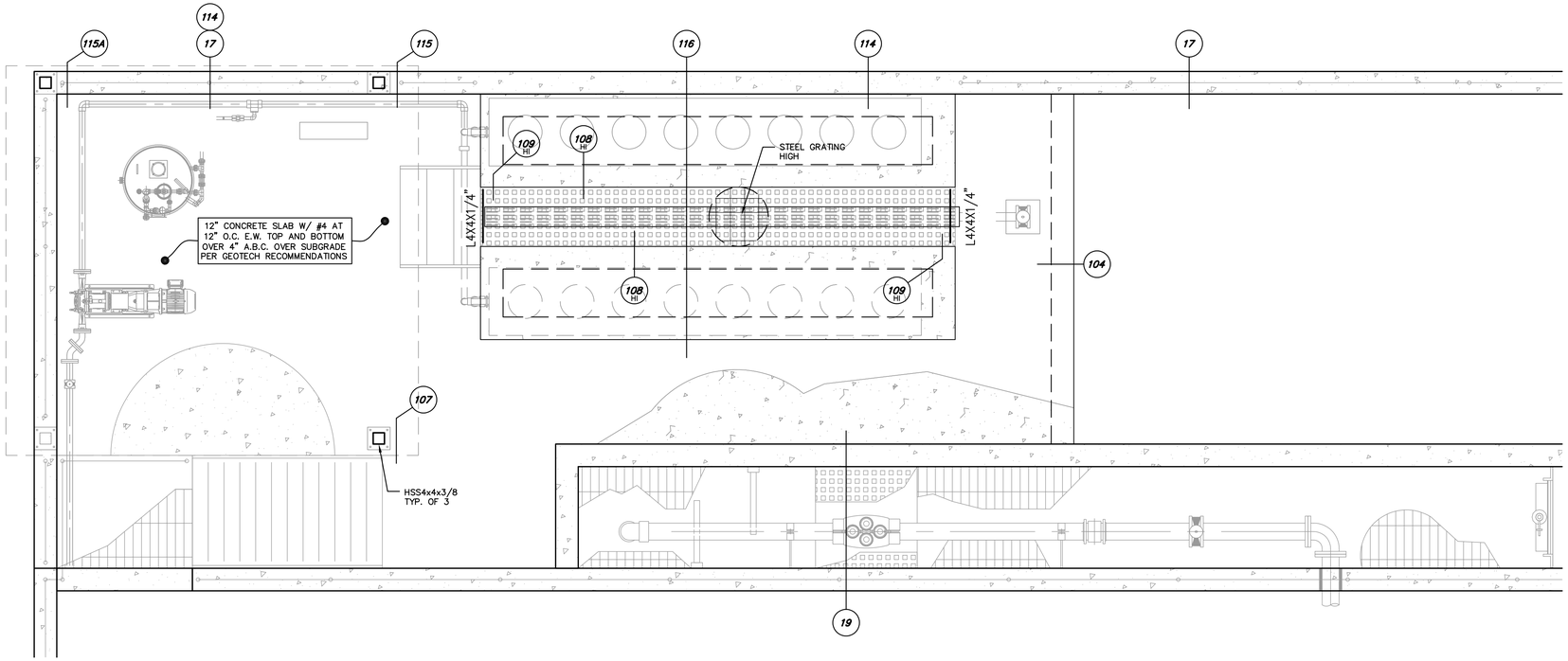

1 PLAN - DEWATERING PAD

SCALE: 1/2"=1'-0"

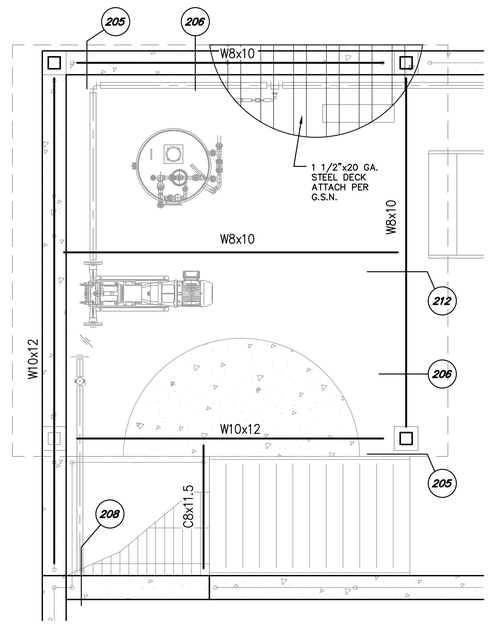

2 SHADE STRUCTURE - FRAMING PLAN

SCALE: 1/2"=1'-0"

PK ASSOCIATES, LLC
6900 E. Belleview Ave. #200
Greenwood Village, Colorado 80111
Phone: (720) 799-1058
Email: cadd@pkastructural.com
Website: www.pkastructural.com

NO	BY	DATE	REVISIONS	DATE	APP.

Registered Professional Engineer (AZ)
CERTIFICATE NO.
70374
JAMES
APPLEYARD
Date Signed 10/31/25
ARIZONA, U.S.A.

PREPARED BY: PKA
DESIGNED BY: JA
DRAWN BY: NS
CHECKED BY: JA
SCALE: AS NOTED
DATE: SEP 2025
JOB NO. 23364

THESE DRAWINGS ARE THE PROPERTY OF P.A.C.E. AND SHALL NOT BE REPRODUCED IN ANY MANNER NOR BE USED FOR CONSTRUCTION UNLESS STAMPED "ISSUED FOR CONSTRUCTION".

TITLE
FRAMING PLAN

JOB
TOWN OF JEROME
WASTEWATER
TREATMENT PLANT
YAVAPAI AZ

ISSUED FOR BID

PREPARED BY:
PACE
Advanced Water Engineering
8723 E. VIA DE COMERCIO, STE A, SCOTTSDALE, CA 85258
P: (408) 991-3595 | W: www.pacewater.com
TAYLOR B. PIERCE R.C.E 70097 DATE

SHEET
S2.10
61 OF 99 SHEETS

JOB NO. 23364

NOTES:

1. CONCRETE SLAB/WALL.
2. CONT. L2x2x1/4" W/ 1/2"ø H.S. AT AT 18" O.C.
3. GRATING AND ATTACHMENT BY OTHERS.

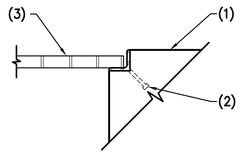

108 GRATING AT CONCRETE SLAB/WALL

NO SCALE

NOTES:

1. MASONRY WALL BEYOND.
2. CONCRETE SLAB WHERE OCCURS.
3. FINISHED GRADE.
4. SOLID GROUTED MASONRY STEM WALL AND CONCRETE FOOTING WITH REINFORCING CONTINUOUS FROM BEYOND.
5. CONCRETE SLAB ON GRADE, TOOLED EDGE AT OPENING.
6. DEPRESS STEM WALL 8" MIN.
7. VARIES – SEE PLANS FOR SIZE AND REINF.

NOTE:

– AT CONTRACTOR'S OPTION, USE CONCRETE STEM WALL W/ SAME REINFORCING.

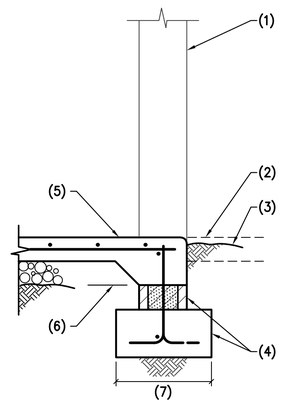

105 EXTERIOR MASONRY WALL FOOTING AT OPENING

NO SCALE

NOTES:

1. CONCRETE WALL.
2. CONCRETE FOOTING MAT SLAB
3. DOWELS TO MATCH AND LAP VERTICAL WALL REINFORCING.
4 CONCRETE SLAB OR FINISHED GRADE AS OCCURS.
5. CONTINUOUS KEYED JOINT.
6. 6" WATER STOP.
7. #5 BAR CONT. AT HOOK.
8. MIRA DRAIN BY CARLISE COATING AND WATERPROOFING, INC. OR APPROVED EQUAL.

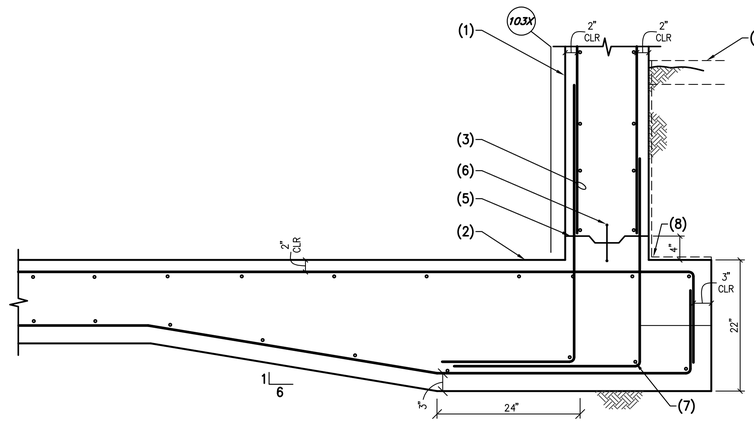

101 CONCRETE WALL AT EDGE OF MAT FOUNDATION

NO SCALE

NOTES:

1. CONCRETE WALL.
2. CONCRETE FOOTING.
3. FOOTING REINFORCING.
4. DOWELS TO MATCH AND LAP FOOTING REINFORCING.
5. 90° HOOK.

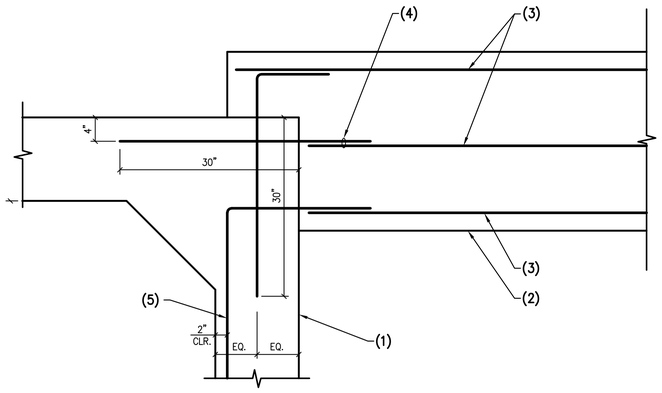

106 PLAN – CONCRETE FOOTING AT CONCRETE WALL

NO SCALE

NOTES:

1. STEEL ANGLE.
2. 1/4" STEEL PLATE.
3. GRATING AND ATTACHMENT BY OTHERS.

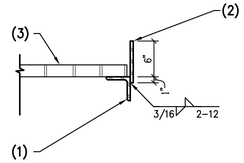

104 GRATING AT STEEL ANGLE

NO SCALE

NOTES:

1. 1 #4 CONTINUOUS.
2. FINISHED GRADE OR CONCRETE SLAB WHERE OCCURS.
3. CONCRETE FOOTING.
4. MASONRY WALL – GROUT SOLID BELOW GRADE.
5. DOWELS TO MATCH AND LAP VERTICAL WALL REINFORCING PER G.S.N. – ALTERNATE BENDS.
6. CONCRETE SLAB.
7. GRADE VARIES AS REQ'D. SOLID GROUT WALL BELOW GRADE.

NOTE:

AT CONTRACTOR'S OPTION, USE CONCRETE STEM WALL W/ SAME REINFORCING.

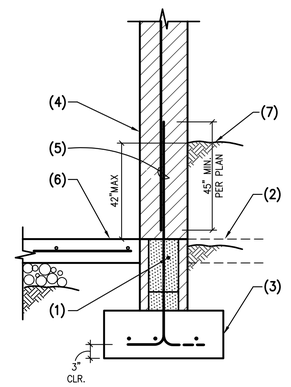

102 EXTERIOR MASONRY WALL FOOTING

NO SCALE

NOTES:

1. CONCRETE SLAB/WALL.
2. CONT. L2x2x1/4" STEEL ANGLE W/ 1/2"ø H.S. AT 4" O.C. AT STEEL ANGLE.
3. 1/2"x6"x6" STEEL PLATE W/ 2– 1/2"ø H.S. AT 4" O.C.
4. STEEL ANGLE.
5. GRATING AND ATTACHMENT BY OTHERS.

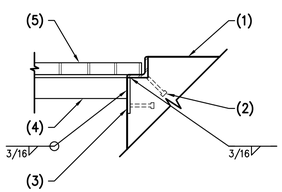

109 STEEL ANGLE AT CONCRETE WALL/SLAB

NO SCALE

NOTES:

1. STEEL COLUMN.
2. 1/2"x10"x10" STEEL PLATE W/ 4– 3/4"ø F1554 GR36 A.B. AT 7" O.C.
3. ±1 1/2" DRYPACK.
4. CONCRETE SLAB.

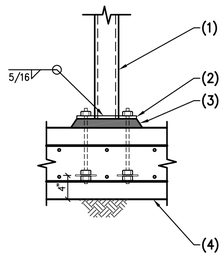

107 STEEL COLUMN AT CONCRETE SLAB

NO SCALE

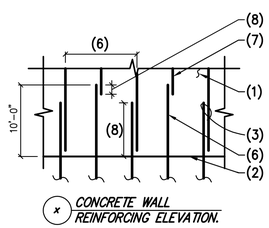

(x) CONCRETE WALL REINFORCING ELEVATION.

NOTES:

1. CONCRETE WALL.
2. CONCRETE FOOTING.
3. DOWELS TO MATCH AND LAP VERTICAL WALL REINFORCING.
4 #5 BAR CONTINUOUS AT HOOK.
5. CONTINUOUS KEYED JOINT.
6. DOWEL TO MATCH SCHEDULED WALL REINFORCING.
7. EVER OTHER VERTICAL BAR MAY LAP W/ A #5.
8. CLASS "B" TENSION LAP.

103 CONCRETE WALL AT MAT FOUNDATION

NO SCALE

ISSUED FOR BID

PREPARED BY:

PACE
Advanced Water Engineering
8723 E. VIA de VENTURA, SUITE 200 | SCOTTSDALE, CA 85258
P: (480) 991-3995 | www.paceadvisor.com

TAYLOR B. PIERCE R.C.E 70097 DATE

SHEET
S3.1
62 OF 99 SHEETS

JOB NO. 23364

TITLE
FOUNDATION DETAILS

JOB
TOWN OF JEROME
WASTEWATER
TREATMENT PLANT
YAVAPAI AZ

NO	BY	DATE	REVISIONS	DATE	APP.

PREPARED BY: PKA
DESIGNED BY: JA
DRAWN BY: NS
CHECKED BY: JA
SCALE: AS NOTED
DATE: SEP 2025
JOB NO. 23364

Registered Professional Engineer
CERTIFICATE NO.
70374
JAMES APPLEYARD
10/31/25
Date Signed
ARIZONA, U.S.A.

PK ASSOCIATES, LLC
6900 E. Belleview Ave. #200
Greenwood Village, Colorado 80111
Phone: (720) 799-1058
Email: cadd@pkastructural.com
Website: www.pkastructural.com

THESE DRAWINGS ARE THE PROPERTY OF P.A.C.E. AND SHALL NOT BE REPRODUCED IN ANY MANNER NOR BE USED FOR CONSTRUCTION UNLESS STAMPED "ISSUED FOR CONSTRUCTION".

NOTES:
1. CONCRETE SLAB.
2. ALUMINUM GRATING.
3. 6" CONCRETE WALL/ SLAB W/ #4 AT 6"O.C. E.W.
4. WATERSTOP PER PACE DRAWINGS.
5. L3x3x1/4 W/ 1/2"ø HILTI SS KWIK BOLT T2 SCREW ANCHOR, OR APPROVED EQUAL. 2 ANCHORS EACH SIDE AT 9" O.C.

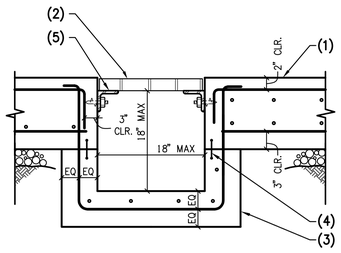

113 *SUMP PIT AT CONCRETE SLAB*

NO SCALE

NOTES:
1. CONCRETE WALL.
2. CONCRETE SLAB.
3. #5x30"x12" AT 12" O.C.
4. CONT. #5 AT BEND.

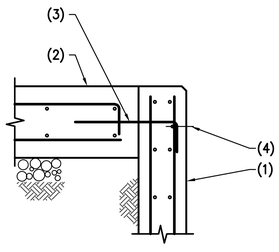

114 *CONCRETE SLAB AT CONCRETE WALL*

NO SCALE

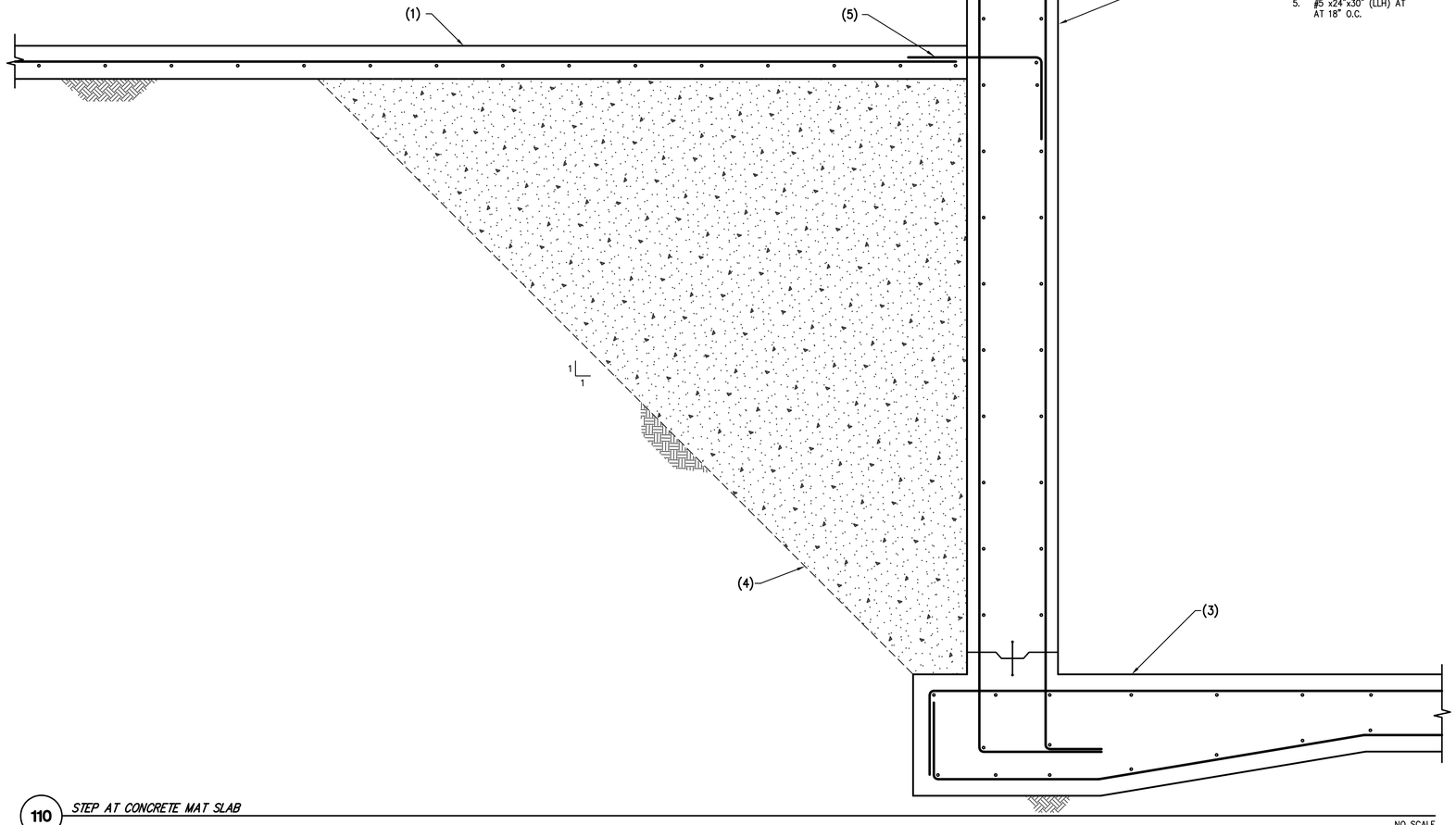

110 *STEP AT CONCRETE MAT SLAB*

NO SCALE

NOTES:
1. CONCRETE SLAB.
2. CONCRETE WALL.
3. CONCRETE MAT SLAB.
4. LEAN CONCRETE INFILL.
5. #5 x24"x30" (LLH) AT AT 18" O.C.

NOTES:
1. CONCRETE WALL.
2. CONCRETE SLAB.
3. #5x30"x12" AT 12" O.C.
4. CONT. #5 AT BEND.
5. STEEL POST.
6. 1/2"x12"x6" STEEL PLATE W/ 2– #5x30" A706 WELDABLE REBAR AT 9" O.C. AND 3/4"ø H.S. CENTERED.
7. 1/2" STEEL PLATE.
8. 2– #5x30" A706 WELDABLE REBAR.
9. 3/4"ø H.S.

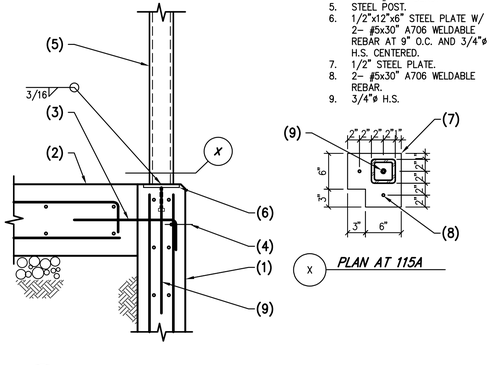

115 *CONCRETE SLAB AT CONCRETE WALL*

115A *AS NOTED*

NO SCALE

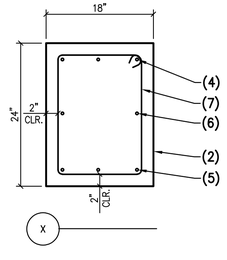

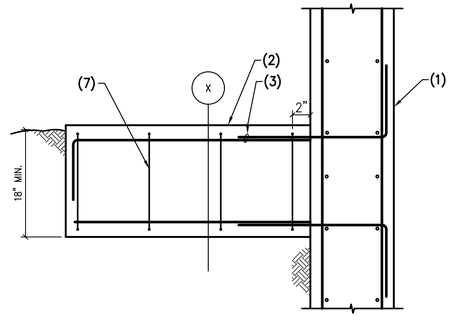

112 *STAIR FOOTING AT CONCRETE WALL*

NO SCALE

NOTES:
1. CONCRETE WALL.
2. STAIR CONCRETE FOOTING.
3. DOWELS TO MATCH AND LAP FOOTING REINFORCING.
4. 4– #6 TOP.
5. 3– #5 BOTTOM.
6. #5 EACH FACE.
7. #4 AT 12" O.C.

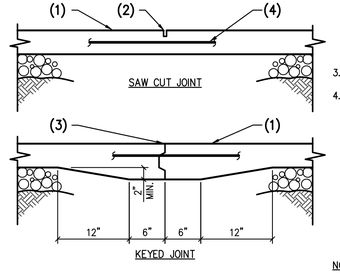

NOTES:
1. CONCRETE SLAB ON GRADE.
2. SAWCUT – 1/8" WIDE x 1/4 SLAB THICKNESS IN DEPTH – CUT SHALL BE MADE SOON ENOUGH TO PREVENT SHRINKAGE CRACKING, BUT NOT SO SOON AS TO CAUSE SPALLING OF THE CONCRETE WHILE SAWING. WORK MUST BE ACCOMPLISHED WITHIN 24 HOURS OF CONCRETE PLACEMENT.
3. CONTINUOUS KEY – SEE TYPICAL KEY IN CONCRETE DETAIL.
4. CUT 1/2" REINFORCEMENT ACROSS C.J. DO NOT CUT AT RAMP.

NOTE:
KEYED JOINTS NEED ONLY OCCUR AT EXPOSED EDGES DURING PLACEMENT UNLESS SPECIFICALLY NOTED ON THE PLANS. "TOOL WET JOINT", "ZIP STRIP", ETC. SHALL MATCH SAWCUT REQUIREMENTS.

111 *CONTROL JOINTS IN CONCRETE SLAB ON GRADE*

NO SCALE

PK ASSOCIATES, LLC
6900 E. Belleview Ave. #200
Greenwood Village, Colorado 80111
Phone: (720) 799-1058
Email: cadd@pkastructural.com
Website: www.pkastructural.com

NO	BY	DATE	REVISIONS	DATE	APP.

Registered Professional Engineer (Civil) CERTIFICATE NO. 70374 JAMES APPLEYARD Date Signed 10/31/25 ARIZONA, U.S.A.

PREPARED BY: PKA
DESIGNED BY: JA
DRAWN BY: NS
CHECKED BY: JA
SCALE: AS NOTED
DATE: SEP 2025
JOB NO.: 23364

THESE DRAWINGS ARE THE PROPERTY OF P.A.C.E. AND SHALL NOT BE REPRODUCED IN ANY MANNER NOR BE USED FOR CONSTRUCTION UNLESS STAMPED "ISSUED FOR CONSTRUCTION".

TITLE: **FOUNDATION DETAILS**

JOB: TOWN OF JEROME
WASTEWATER
TREATMENT PLANT
YAVAPAI AZ

ISSUED FOR BID

PREPARED BY:

PACE
Advanced Water Engineering
8723 E. VIA DE COMMERCIO, 3RD FLOOR, SCOTTSDALE, CA 85258
P: (480) 991-3595 | W: www.pacewater.com

TAYLOR B. PIERCE R.C.E. 70097 DATE

SHEET **S3.2**
63 OF 99 SHEETS

JOB NO. 23364

PK ASSOCIATES, LLC
6900 E. Belleview Ave. #200
Greenwood Village, Colorado 80111
Phone: (720) 799-1058
Email: cadd@pkastructural.com
Website: www.pkastructural.com

NOTES:

1. CONCRETE SLAB.
2. 8" CONCRETE WALL/SLAB W/ #5 AT 12" O.C. EACH WAY.
3. HIGH DENSITY FOAM.
4. GRATING AND ATTACHMENT PER SHEET M5.3.
5. DOWELS TO MATCH AND LAP WALL REINFORCING.
6. 2 CONT. #4.
7. #4x60" AT 12" O.C.
8. EQUIPMENT AND ATTACHMENT BY OTHERS.
9. CONCRETE WALL.

116 SECTION – DEWATERING PLAN

NO SCALE

NO	BY	DATE	REVISIONS	DATE	APP.

Registered Professional Engineer (Civil)
CERTIFICATE NO.
70374
JAMES APPLEYARD
Date Signed 10/31/25
ARIZONA, U.S.A.

PREPARED BY: PKA
DESIGNED BY: JA
DRAWN BY: NS
CHECKED BY: JA
DATE: SEP 2025
SCALE: AS NOTED
JOB NO.: 23364

TITLE: **FOUNDATION DETAILS**

JOB: TOWN OF JEROME
WASTEWATER
TREATMENT PLANT
YAVAPAI AZ

ISSUED FOR BID

PREPARED BY:
PACE
Advanced Water Engineering
8723 E. VIA DE COMERCIO, STE A-104, SCOTTSDALE, CA 85258
P.: (480) 991-3595 | www.pacewater.com
TAYLOR B. PIERCE R.C.E 70097 DATE

SHEET
S3.3
64 OF 99 SHEETS

JOB NO. 23364

THESE DRAWINGS ARE THE PROPERTY OF P.A.C.E. AND SHALL NOT BE REPRODUCED IN ANY MANNER NOR BE USED FOR CONSTRUCTION UNLESS STAMPED "ISSUED FOR CONSTRUCTION".

PK ASSOCIATES, LLC
6900 E. Belleview Ave. #200
Greenwood Village, Colorado 80111
Phone: (720) 799-1058
Email: cadd@pkastructural.com
Website: www.pkastructural.com

NOTES:
1. CONCRETE WALL.
2. CONCRETE SLAB.
3. #5x 36" ⌐ 36" AT SPACING TO MATCH SLAB REINFORCING.
4. CONT. BAR AT HOOK.
5. GRATING AT 209A PER DETAIL 108.

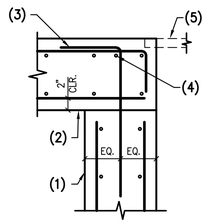

209 CONCRETE WALL AT CONCRETE WALL
209A AS NOTED
NO SCALE

NOTES:
1. STEEL BEAM.
2. STEEL DECK – SEE PLANS FOR DIRECTION.
3. 1/4" CONTINUOUS BENT PLATE.

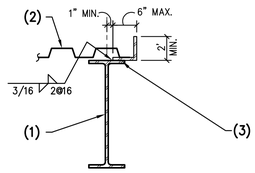

206 STEEL ROOF DECK AT STEEL BEAM
NO SCALE

NOTES:
1. CONCRETE WALL.
2. 1/2"x8"x4" STEEL PLATE W/ 2– 1/2"ø H.S. AT 5" O.C.
3. CONTINUOUS LEDGER ANGLE.
4. STEEL DECK.

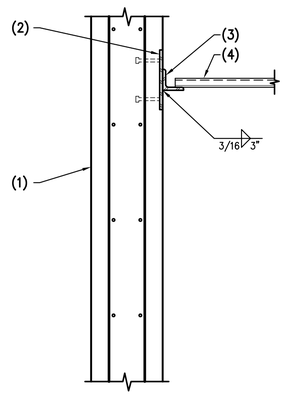

204 LEDGER ANGLE AND STEEL DECK AT CONCRETE WALL
NO SCALE

NOTES:
1. STEEL LEDGER ANGLE – FOR SIZE AND LOCATION, SEE PLAN.
2. STEEL PLATE 1/2"x3"x12" LONG.
3. STEEL PLATE 1/2"x3".

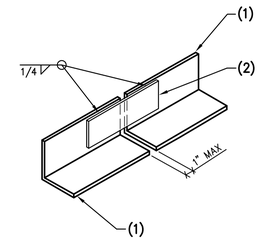

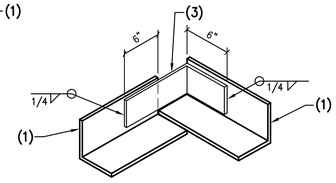

AT CORNERS

201 TYPICAL SPLICE IN CONTINUOUS STEEL LEDGER ANGLE
NO SCALE

NOTES:
1. CONCRETE WALL.
2. CONT. L2x2x1/4" W/ 1/2"ø H.S. AT 18" O.C.
3. GRATING AND ATTACHMENT BY OTHERS.

210 STEEL GRATING AT CONCRETE WALL
NO SCALE

NOTES:
1. CONCRETE WALL.
2. C6x8.2 AT 4'–0" O.C. MAX.
3. CONT. L4x4x1/4.
4. CONT. L2x2x1/4" W/ 1/2"ø H.S. AT 18" O.C.
5. GRATING AND ATTACHMENT BY OTHERS.
6. COPE TOP FLANGE.
7. 1/2"x8"x8" STEEL PLATE W/ 2– 3/4"ø H.S. AT 5" O.C.
8. 3– 3/4"ø H.S. AT 4" O.C. CENTERED ON CHANNEL.
9. HANDRAIL POST AND ATTACHMENT BY OTHERS. (4'–0" O.C. MAX).
10. 1/2"x8"x4" STEEL PLATE W/ 2– 3/4"ø H.S. AT 5" O.C.

207 WALKWAY AT CONCRETE WALL
NO SCALE

NOTES:
1. HSS SQUARE OR RECTANGULAR COLUMN.
2. STEEL BEAM.
3. STEEL SHEAR PLATE. SEE TYP. BOLT SCHEDULE.
4. FOR SIZE, TYPE, AND NUMBER OF BOLTS, REFER TO TYP. BOLT SCHEDULE.
5. 1/2" STEEL CAP PLATE.
6. AT t ≤ 1/4" USE FILLET WELD SIZE TO MATCH "t". AT t > 1/4" USE 5/16" FILLET.
7. 1/2" STEEL BACKER PLATE x BEAM DEPTH x WIDTH OF COLUMN LESS 1".
8. TOP OF COLUMN AS OCCURS.
9. DEPTH TO MATCH JOIST SHOE.
10. BEAM BOTH SIDES WHERE OCCURS.

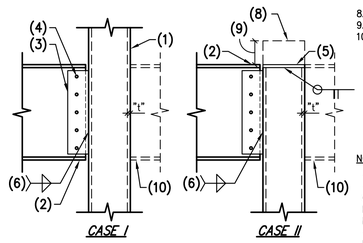

NOTES:
–DETAIL A MAY BE USED TYP. U.N.O.
–DETAIL B MAY BE USED AT CONTRACTOR'S OPTION WHERE HSS MIN. FLANGE THICKNESSES ARE MET PER SCHEDULE.
–WHERE COLUMNS ARE RECTANGULAR IN LIEU OF SQUARE, THE GREATER FLANGE LENGTH (I.E. WORST CASE) APPLIES PER SCHEDULE.
–CONTRACTOR MAY INCREASE PLAN COLUMN THICKNESS AT THEIR OPTION.

B SHEAR PLATE TO COLUMN

MINIMUM COLUMN FLANGE THICKNESS FOR DETAIL B	
HSS MEMBER	THICKNESS ("t")
4x4	1/4"
5x5	1/4"
6x6	1/4"
7x7	1/4"
8x8	5/16"
9x9	5/16"
10x10	3/8"
12x12	3/8"
14x14	1/2"
16x16	1/2"

NOTES:
1. MASONRY WALL.
2. CONTINUOUS GROUTED BOND BEAM PER G.S.N.
3. CONTINUOUS LEDGER ANGLE.
4. STEEL DECK – FOR DIRECTION, SEE PLAN.
5. 1/2"x8"x4" STEEL PLATE W/ 2– 1/2"ø H.S. AT 5" O.C.

202 LEDGER ANGLE AND STEEL DECK AT MASONRY WALL
NO SCALE

NOTES:
1. CONCRETE WALL.
2. CONT. L2x2x1/4" W/ 1/2"ø H.S. AT 18" O.C.
3. GRATING AND ATTACHMENT BY OTHERS.
4. 1/2"x8"x4" STEEL PLATE W/ 2– 3/4"ø H.S. AT 5" O.C.
5. HANDRAIL POST AND ATTACHMENT BY OTHERS. (4'–0" O.C. MAX).

211 EDGE OF GRATING AT CONCRETE WALL
NO SCALE

NOTES:
1. STEEL BEAM.
2. CONCRETE WALL.
3. 3/8" STEEL SHEAR TAB.
4. 2– 1"ø BOLTS.
5. 1/2"x6"x14" STEEL PLATE W/ 3– 3/4"ø H.S. AT 5" O.C.

208 STEEL BEAM AT CONCRETE WALL
NO SCALE

A SHEAR PLATE TO BACKER PLATE TO COLUMN

205 TYPICAL BEAM TO HSS STEEL COLUMN
NO SCALE

NOTES:
1. MASONRY WALL.
2. CONTINUOUS 8" DEEP GROUTED BOND BEAM.
3. SOLID GROUT 6" ALL AROUND ALL ANCHORS.
4. STEEL PLATE PER SCHEDULE BELOW.
5. STEEL BEAM.
6. 3/8" STEEL PLATE.
7. 1 1/2" SLOTTED HOLES.
8. FOR SIZE, TYPE, AND NUMBER OF BOLTS SEE TYPICAL BOLT SCHEDULE.

EMBED PLATE SCHEDULE	
W8,W10	A. 3/8"x4"x12" WITH 2– 3/4"ø H.S. AT 9" O.C.
W12,W14	B. 1/2"x8"x14" WITH 4– 3/4"ø H.S. AT 5"x11" O.C.
W16,W18	C. 5/8"x11"x19" WITH 6– 3/4"ø H.S. AT 8" O.C.
W21,W24	D. 3/4"x11"x27" WITH 8– 3/4"ø H.S. AT 8" O.C.

203 STEEL BEAM TO MASONRY WALL CONNECTION
NO SCALE

NO	BY	DATE	REVISIONS	DATE	APP.

Registered Professional Engineer (Civil) CERTIFICATE NO. 70374 JAMES APPLEYARD Date Signed 10/31/25 ARIZONA, U.S.A.

PREPARED BY: PKA
DESIGNED BY: JA
DRAWN BY: NS
CHECKED BY: JA
SCALE: AS NOTED
DATE: SEP 2025
JOB NO.: 23364

THESE DRAWINGS ARE THE PROPERTY OF P.A.C.E. AND SHALL NOT BE REPRODUCED IN ANY MANNER NOR BE USED FOR CONSTRUCTION UNLESS STAMPED "ISSUED FOR CONSTRUCTION".

TITLE: FRAMING DETAILS

JOB: TOWN OF JEROME WASTEWATER TREATMENT PLANT YAVAPAI AZ

ISSUED FOR BID

PREPARED BY:
PACE
Advanced Water Engineering
8723 E. Via de Ventura, Suite J | SCOTTSDALE, CA 85258
P: (480) 991-3995 | www.paceadvisor.com
TAYLOR B. PIERCE R.C.E 70097 DATE

SHEET
S4.1
65 OF 99 SHEETS

JOB NO. 23364

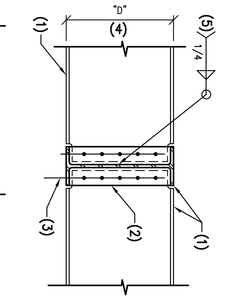

MOTES:

1. STEEL BEAM.
2. USE 3/8" STEEL SHEAR PLATE WHERE "D" = 27" OR GREATER.
3. FOR SIZE, TYPE & NUMBER OF BOLTS, SEE TYPICAL BOLT SCHEDULE. OF BEAM "D" = LESSER OF BEAM DEPTHS AS OCCURS.
4. WELD AS SHOWN ON TYPICAL WELD SCHEDULE. AT CONNECTION AT STIFFENER PLATES WHEN REQUIRED.
5.

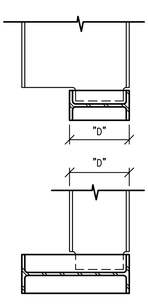

NOTE:
AT ONE SIDED CONNECTIONS, INSTALL 3/8" STIFFENER PLATE OPPOSITE SHEAR PLATE.

212 TYPICAL CONNECTION WIDE FLANGE BEAM TO BEAM

NO SCALE

PK ASSOCIATES, LLC
6900 E. Belleview Ave. #200
Greenwood Village, Colorado 80111
Phone: (720) 493-0000
Email: cadd@pkastructural.com
Website: www.pkastructural.com

ISSUED FOR BID

JOB NO. 23364

SHEET S4.2

66 OF 99 SHEETS

PREPARED BY:

PACE
Advanced Water Engineering
8723 E. VIA de COMMERICO, SUITE A-204 | SCOTTSDALE, CA 85258
P: (408) 991-3595 | www.pacewater.com

TAYLOR B. PIERCE R.C.E 70097 DATE

JOB

TOWN OF JEROME
WASTEWATER
TREATMENT PLANT

YAVAPAI AZ

TITLE

FRAMING DETAILS

PREPARED BY:	PKA
DESIGNED BY:	JA
DRAWN BY:	NS
CHECKED BY:	JA
SCALE	AS NOTED
DATE	SEP 2025
JOB NO.	23364

Registered Professional Engineer
CERTIFICATE NO. 70097
JAMES APPLEYARD
STATE OF ARIZONA
NATIONAL COUNCIL OF EXAMINERS FOR ENGINEERING AND SURVEYING (NCEES)

NO	BY	DATE	REVISIONS	DATE	APP.

THESE DRAWINGS ARE THE PROPERTY OF P.A.C.E. AND SHALL NOT BE REPRODUCED IN ANY MANNER NOR BE USED FOR CONSTRUCTION UNLESS STAMPED "ISSUED FOR CONSTRUCTION".

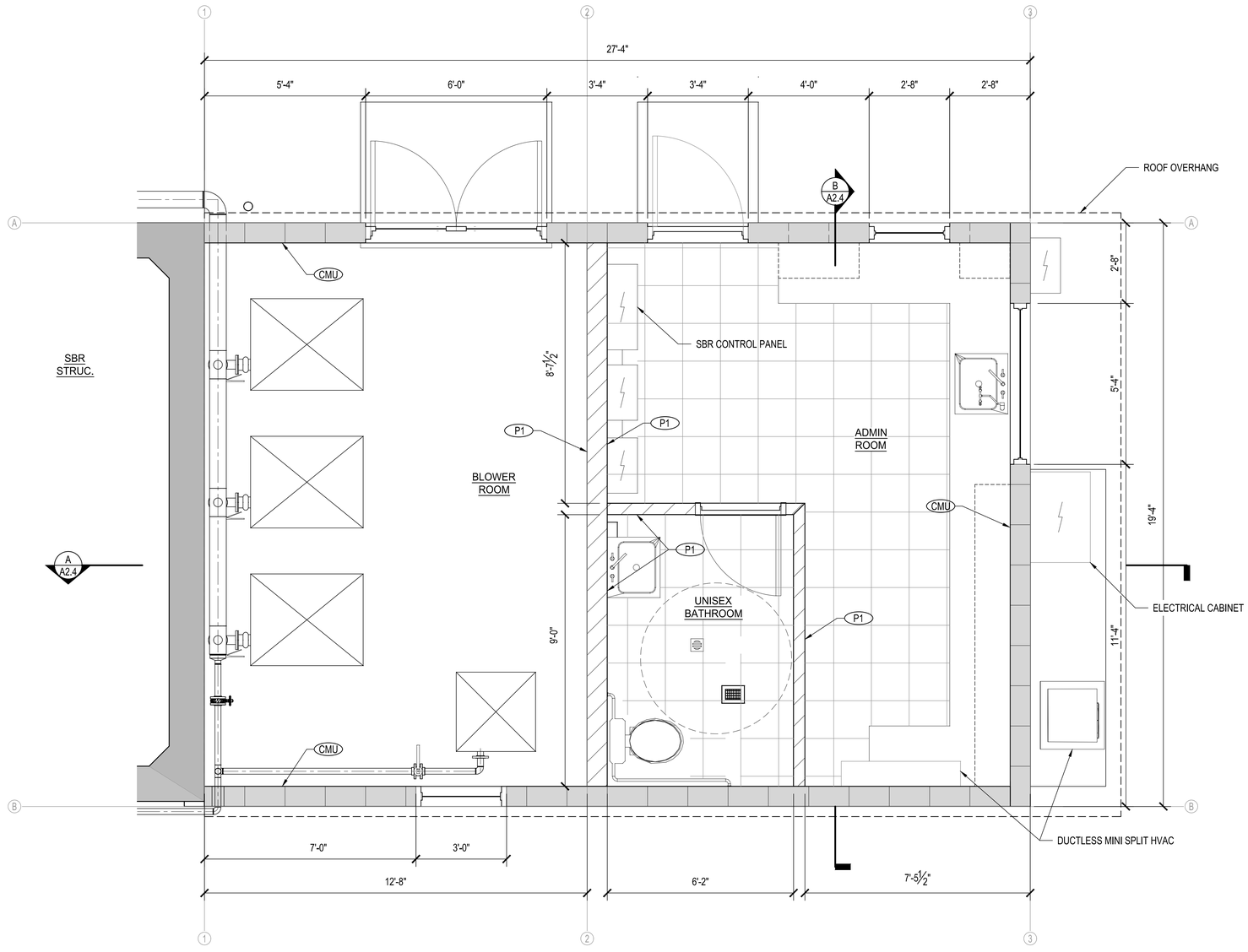

ARCH. PLAN
SCALE: 1/2" = 1'-0"

NORTH

GENERAL NOTES

1. ALL INTERIOR WALLS, EXTERIOR WALLS, AND CEILINGS SHALL BE INSULATED PER SPECIFICATION SECTION 07 2100 OF THE CONTRACT DOCUMENTS.

DOOR & WINDOW NOTES:

1. ALL EXITS SHALL OPEN FROM THE INSIDE WITHOUT THE USE OF A KEY AND/OR SPECIAL KNOWLEDGE (U.N.O.). MANUALLY OPERATED EDGE OR SURFACE MOUNTED FLUSH BOLTS AND SURFACE BOLTS ARE PROHIBITED.
2. PAINT STEEL DOORS AND FRAMES WITH ONE (1) COAT OF RUST INHIBITING PRIMER AND ONE (1) COAT OF SEMI-GLOSS ALKYD ENAMEL.
3. ALL INTERIOR DOORS TO BE SOLID CORE MASONITE DOOS IN "TIMELY" FRAMES (U.N.O.).
4. ALL DOOR HARDWARE TO BE AL SERIES "SCHLAGE" LEVER TYPE WITH FINISH PER OWNER'S DIRECTION. VERIFY KEYING WITH OWNER.
5. PROVIDE DOOR STOPS AS REQUIRED AT FLOOR AND/OR WALL.
6. ALL DOORS TO BE MASTER KEYED. VERIFY KEYING WITH OWNER.
7. ALL THRESHOLDS TO BE MAXIMUM HEIGHT OF 1/2".
8. DOOR LOCK AND LATCHES SHALL COMPLY WITH UBC SECTION 1004.3 AND ADA.
9. THE AUTHORITY HAVING JURISDICTION MAY INCREASE THE MAXIMUM EFFORT TO OPERATE FIRE DOORS IN ORDER TO ACHIEVE POSITIVE LATCHING, BUT NOT EXCEEDING THE 15 LP MAX.
10. MAXIMUM EFFORT TO OPERATE EXTERIOR DOORS IS 5 LBS.
11. HAND-ACTIVATED DOOR OPENING HARDWARE SHALL BE CENTERED BETWEEN 30" AND 44" A.F.F.
12. PROVIDE 1/4" TEMPERED GLASS AT ALL INTERIOR WINDOW LOCATIONS.
13. MAIN EXTERIOR DOORS: PROVIDE VISIBLE DURABLE SIGN ON THE EGRESS SIDE, ON OR ADJACENT TO THE DOOR, STATING: "THIS DOOR TO REMAIN UNLOCKED WHEN THE BUILDING IS OCCUPIED." THE SIGN SHALL BE IN LETTERS 1" HIGH ON A CONTRASTING BACKGROUND.

FLOOR PLAN NOTES:

1. ALL INSULATION SHALL HAVE FLAME SPREAD RATE NOT TO EXCEED 25 AND A SMOKE DENSITY NOT TO EXCEED 450 WHEN TESTED IN ACCORDANCE WITH STANDARD NO. 42-1.
2. PROVIDE 4'-0" HIGH ANGLE IRON DOOR GUARDS AT FLOOR OF EACH JAMB OF EACH OVERHEAD DOOR OPENING.
3. ALL NEW DRYWALL SHALL BE TAPED, TEXTURED, AND PAINTED WITH ONE (1) COAT VINYL ACRYLIC WALL SEALER AND TWO (2) COATS LO-GLO ACRYLIC SEMI-GLOSS ENAMEL. PROVIDE SAMPLE FOR OWNER'S APPROVAL. PROVIDE LIGHT KNOCKDOWN TEXTURE.
4. RESTROOM DRYWALL SHALL BE WATER RESISTANT TYPE X. RESTROOMS TO HAVE +4' HIGH 12"x12" GLAZED CERAMIC TILE BY "DAL TALE" OR EQUAL, FROM STANDARD COLOR SELECTION WAINSCOT. PAINT DRYWALL ABOVE WITH ONE (1) COAT PRIMER AND TWO (2) COATS SEMI-GLOSS ENAMEL PAINT. USE DUNN-EDWARDS OR FRAZEE.
5. BLOWER ROOM: PROVIDE SAWCUT CONTROL JOINTS AT 5'x5' MINIMUM FOR AREAS WITH SEALED CONCRETE FINISHED FLOOR. RESTROOM AND OPERATIONS ROOM TO RECEIVE 12"x12" VINYL COMPOSITE TILES. PROVIDE VCT AND CERAMIC TILE SAMPLES FOR OWNER'S SELECTION.
6. PROVIDE 4" CERAMIC TILE BASE TO MATCH FLOOR TILE. AT RESTROOM, PROVIDE 6" COVERED CERAMIC TILE BASE.
7. SEE PLUMBING DRAWING FOR FLOOR AREA DRAINAGE AND RESTROOM. PLUMBING DRAWINGS SHALL APPLY FOR APPLICABLE FIXTURES.

WALL FINISH LEGEND

P1 DUNN EDWARDS - FOSSIL

CMU CLEAR SEALER

INSTAL 4" HIGH RESILIENT BASE FOR ALL ROOMS.

FLOOR FINISH LEGEND

SEALED CONCRETE

12"X12" VINYL COMPOSITE TILES

NO	BY	DATE	REVISIONS	DATE	APP.

Registered Professional Engineer (Civil) CERTIFICATE NO. 70097 TAYLOR B. PIERCE Registered Professional Engineer ARIZONA, U.S.A. Expires 12/31/28

PREPARED BY: PACE
DESIGNED BY: NE
DRAWN BY: DS, WW
CHECKED BY: TP
SCALE: AS NOTED
DATE: NOV 2025
JOB NO. B614

THESE DRAWINGS ARE THE PROPERTY OF P.A.C.E. AND SHALL NOT BE REPRODUCED IN ANY MANNER NOR BE USED FOR CONSTRUCTION UNLESS STAMPED 'ISSUED FOR CONSTRUCTION'.

TITLE
BLOWER OPS ARCH PLAN

JOB
TOWN OF JEROME
WASTEWATER
TREATMENT PLANT
YAVAPAI CO. AZ

100% ISSUED FOR BID

PREPARED BY:
PACE
Advanced Water Engineering
8723 E. VIA DE VENTURA, SUITE A-200, SCOTTSDALE, CA 85258
P: (480) 991-3955 | www.pacewater.com
TAYLOR B. PIERCE R.C.E. 70097 DATE

SHEET
A1.0
67 OF 99 SHEETS

JOB NO. B614

W:\B614\Engineering\B614-30sheet\B614 - A2.0 BLOWER OPS ARCH PLAN.dwg - Tab: A1.0 - by reddington on 11/21/25 at 12:26:37 PM

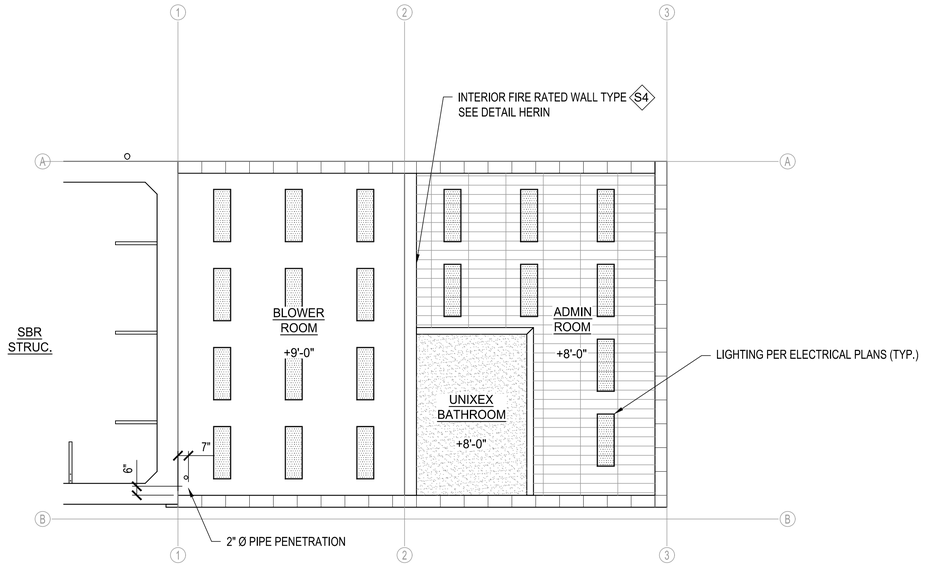

REFLECTED CEILING PLAN

SCALE: 1/4" = 1'-0"

CEILING NOTES:

1. T-BAR SUSPENSION SYSTEM TO BE PROVIDED BY ARMSTRONG OR EQUAL. SEE REFLECTED CEILING PLANS FOR LOCATIONS: 2'X4'X5/8" TILE AND CEILING HEIGHTS. CEILINGS TO BE LAID OUT CENTERED IN ROOMS IN BOTH DIRECTIONS AS SHOWN. HANG T-BAR SUSPENSION SYSTEM FROM ROOF JOISTS WITH DIAGONAL HANGERS TO PREVENT SAGGING. COLOR BY OWNER.
2. RESTROOM PER REFLECTED CEILING PLAN TO HAVE 5/8" DRYWALL CEILINGS. SUPPORT WITH 3-5/8"X22 GAUGE METAL STUDS AT 16" O.C. FOR SPANS 8' OR LESS. FOR SPANS OVER 8' USE 6"X22 GAUGE METAL STUDS AT 16".

CEILING FINISH LEGEND:

- 2'x4'x5/8" SUSPENDED T-BAR CEILING
- 5/8" DRYWALL CEILING
- EXPOSED CEILING
- 2' x 4' RECESSED FLORESCENT LIGHT FIXTURE

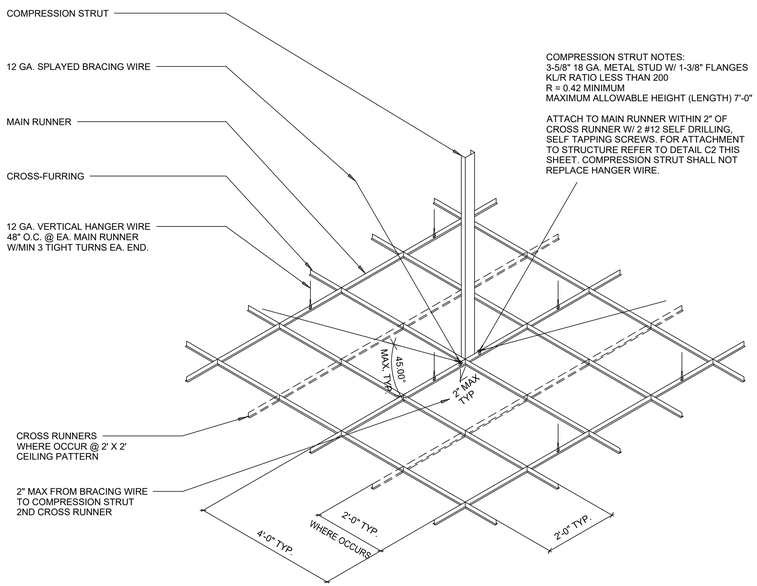

COMPRESSION STRUT NOTES:
3-5/8" 18 GA. METAL STUD W/ 1-3/8" FLANGES
KL/R RATIO LESS THAN 200
R = 0.42 MINIMUM
MAXIMUM ALLOWABLE HEIGHT (LENGTH) 7'-0"

ATTACH TO MAIN RUNNER WITHIN 2" OF CROSS RUNNER W/ 2 #12 SELF DRILLING, SELF TAPPING SCREWS. FOR ATTACHMENT TO STRUCTURE REFER TO DETAIL C2 THIS SHEET. COMPRESSION STRUT SHALL NOT REPLACE HANGER WIRE.

NOTE: PROVIDE SETS OF FOUR SPLAYED BRACING WIRES, ORIENTED 90 DEGREES FROM EACH OTHER, AND COMPRESSION STRUT AT A SPACING NOT MORE THAN 12'-0" x 12'-0" ON CENTER. PROVIDE 12 GAUGE MINIMUM SPLAYED BRACING WIRES FASTENED WITH NOT LESS THAN FOUR TIGHT TURNS IN 1-1/2 INCHES AT BOTH ENDS OF WIRE. SLOPE OF SPLAYED BRACING WIRES SHOULD NOT EXCEED 45 DEGREES FROM THE PLANE OF THE CEILING.

NOTE: PROVIDE HANGER WIRES AT A SPACING NOT MORE THAN 4'-0" X 4'-0" ON CENTER. PROVIDE 8 OR 12 GAUGE MINIMUM HANGER WIRE FASTENED WITH NOT LESS THAN THREE TIGHT TURNS IN 1-1/2 INCHES AT BOTH ENDS OF WIRE.

2'x4' SUSPENDED LAY-IN CEILING GRID

INTERIOR RATED WALL

NO	BY	DATE	REVISIONS	DATE	APP.

Registered Professional Engineer (Civil) CERTIFICATE NO. 47127 Timothy B. Pierce Signed 12/31/25 ARIZONA, U.S.A. Expires 12/31/28

PREPARED BY: PACE
DESIGNED BY: NE
DRAWN BY: DS, WW
CHECKED BY: TP
SCALE: AS NOTED
DATE: NOV 2025
JOB NO.: B614

THESE DRAWINGS ARE THE PROPERTY OF P.A.C.E. AND SHALL NOT BE REPRODUCED IN ANY MANNER NOR BE USED FOR CONSTRUCTION UNLESS STAMPED 'ISSUED FOR CONSTRUCTION'.

TITLE
BLOWER OPS ARCH REFLECTED CEILING PLAN

JOB
TOWN OF JEROME
WASTEWATER
TREATMENT PLANT
YAVAPAI CO. AZ

100% ISSUED FOR BID

PREPARED BY:
PACE
Advanced Water Engineering
8723 E. VIA DE VENTURA, SUITE 290 | SCOTTSDALE, CA 85258
P: (480) 991-3995 | www.pacewater.com
TAYLOR B. PIERCE R.C.E. 70097 DATE

SHEET
A2.0
68 OF 99 SHEETS

JOB NO. B614

W:\B614\Engineering\B614-30\sheets\B614 - A2.0 BLOWER OPS ARCH PLAN.dwg - Tab: A2.0 - by reddington on 11/21/25 at 12:26:57 PM

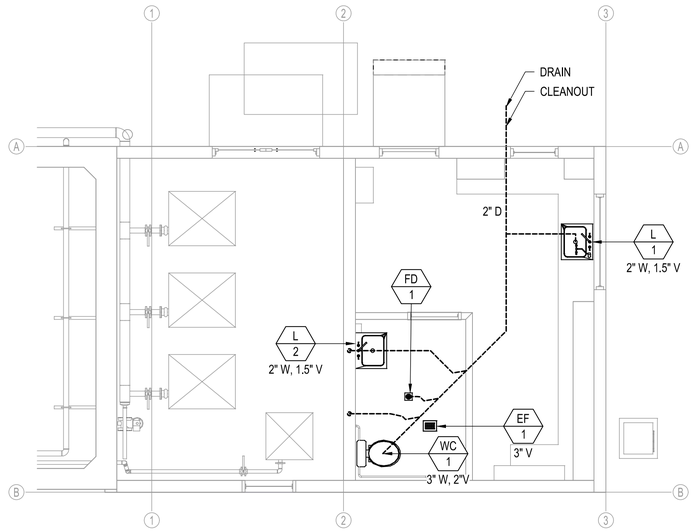

SEWER PLUMBING PLAN

SCALE: 1/4" = 1'-0"

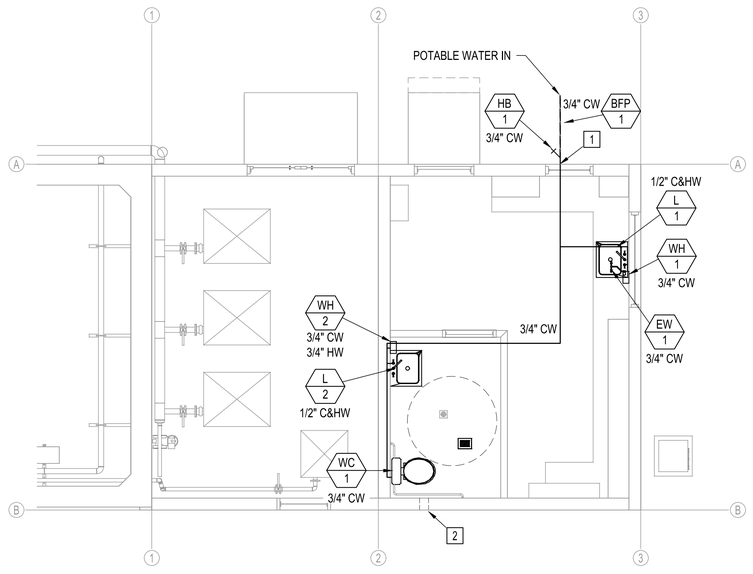

WATER PLUMBING PLAN

SCALE: 1/4" = 1'-0"

PLUMBING NOTES

1. ALL EQUIPMENT & FIXTURE COLD WATER AND HOT WATER CONNECTION SHALL BE INSTALLED W/ ISOLATION VALVE.
2. ALL PLUMBING AND HVAC LINES ARE SCHEMATIC. CONTRACTOR TO INSTALL PER BUILDING CODES.

CONSTRUCTION NOTES

1 INSTALL 2" REDUCED PRESSURE-TYPE BACKFLOW PREVENTER UNIT & ASSEMBLY COMPONENTS. BACKFLOW PREVENTER SHALL BE FEBCO, WATTS, WILKENS, OR APPROVED EQUAL.

2 INSTALL EXHAUST VENT DUCT, DISCHARGE TO WALL.

FIXTURE SCHEDULE

ITEM	FIXTURE	ROUGH-IN CONNECTIONS				DESCRIPTION
		COLD WATER	HOT WATER	WASTE	VENT	(ALL PLUMBING FIXTURES MUST BE APPROVED BY THE ENGINEER & OWNER PRIOR TO PURCHASING)
WC 1	WATER CLOSET (ADA)	1"	--	3"	2"	KOHLER OR AMERICAN STANDARD ADA HEIGHT ELONGATED WITH SLOAN AUTOMATIC FLUSH VALVE.
L 1	LAVATORY	1/2"	1/2"	2"	1-1/2"	ADA BARRIER FREE LAVATORY, COUNTER MOUNTED, WITH EXTRA HOLE FOR SOAP DISPENSER, METERED, SINGLE HANDLE SELF CLOSING FAUCET, LOOSE KEY STOPS WITH RIGID SUPPLIES, GRID DRAIN, P-TRAP.
L 2	SINK	1/2"	1/2"	2"	1-1/2"	ADA BARRIER FREE SINK, WALL MOUNTED, WITH EXTRA HOLE FOR SOAP DISPENSER, METERED, SINGLE HANDLE SELF CLOSING FAUCET, LOOSE KEY STOPS WITH RIGID SUPPLIES, GRID DRAIN, P-TRAP.
WH 1	WATER HEATER	3/4"	3/4"	--	--	RHEEM PERFORMANCE TANKLESS ELECTRIC WATER HEATER. 13 KW, 2.54 GPM
WH 2	WATER HEATER	3/4"	3/4"	--	--	RHEEM PERFORMANCE TANKLESS ELECTRIC WATER HEATER. 13 KW, 2.54 GPM
FD 1	FLOOR DRAIN	--	--	SEE PLAN FOR SIZE		ZURN NO. Z-415-NH-B-P, CAST IRON, COMPLETE WITH ROUND POLISHED NICKEL-BRONZE TOP, FLASHING COLLAR, AND P-TRAP.
HVAC 1	HVAC		--	--	--	1 TON, 12,000 BTU AIR CONDITIONER HEAT PUMP (COOLING/HEATING) SPLIT SYSTEM W/ THERMOSTAT, 16 SEER, 120V 1PH, 60 HZ. INDOOR AIR HANDLER TO BE HORIZONTALLY MOUNTED PER MFR REQUIREMENTS. AIR COMPRESSOR INSTALLED ON ROOF PER PLAN.
HB 1	HOSE BIBB	3/4"	--	--	--	HOSE BIBB MOUNTED 24" ABOVE FINISHED FLOOR.
EW 1	EYE WASH STATION	3/4"	--	--	--	EMERGENCY EYEWASH STATION, GUARDIAN G1000 FAUCET OR EQUAL.
EF 1	EF		--	--	4	100 CFM EXHAUST FAN W/ 100W LIGHT, BROAN MODEL 750 OR EQUAL.
BFP 1	BFP	--	--	--	--	3/4" BACK FLOW PREVENTER

NO	BY	DATE	REVISIONS	DATE	APP.

Registered Professional Engineer (Civil) CERTIFICATE NO. 70097 TAYLOR B. PIERCE Signed ARIZONA, U.S.A. Expires 12/31/28

PREPARED BY: PACE
DESIGNED BY: NE
DRAWN BY: DS, WW
CHECKED BY: TP
SCALE: AS NOTED
DATE: NOV 2025
JOB NO.: B614

TITLE: **BLOWER OPS ARCH SEWER & PLUMBING PLAN**

JOB: TOWN OF JEROME WASTEWATER TREATMENT PLANT — YAVAPAI CO. AZ

100% ISSUED FOR BID

PREPARED BY: TAYLOR B. PIERCE R.C.E 70097 DATE

PACE
Advanced Water Engineering
8723 E. Via de Commercio, Suite 1, Anaheim Hills, CA 92808
P: (480) 991-3995 | www.pacewater.com

SHEET **A3.0**
69 OF 99 SHEETS

JOB NO. B614

THESE DRAWINGS ARE THE PROPERTY OF P.A.C.E. AND SHALL NOT BE REPRODUCED IN ANY MANNER NOR BE USED FOR CONSTRUCTION UNLESS STAMPED 'ISSUED FOR CONSTRUCTION'.

W:\B614\Engineering\B614-30\sheets\B614 - A2.0 BLOWER OPS ARCH PLAN.dwg - Tab: A3.0 - by neddington on 11/21/25 at 12:26:57 PM

CONSTRUCTION NOTES:

1. INSTALL ALUMINUM WINDOW SYSTEM.
2. INSTALL HOLLOW METAL DOOR AND FRAME PER PLAN.

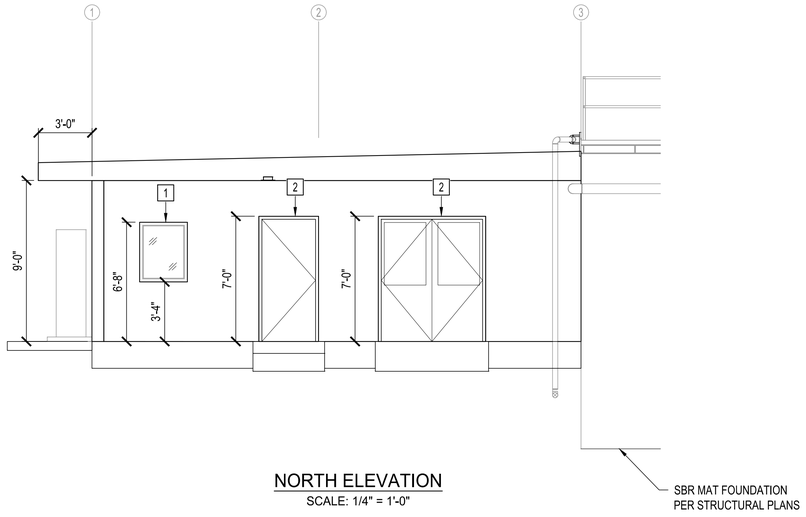

NORTH ELEVATION
SCALE: 1/4" = 1'-0"

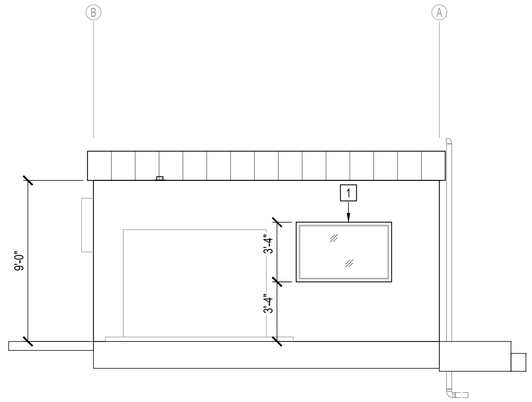

EAST ELEVATION
SCALE: 1/4" = 1'-0"

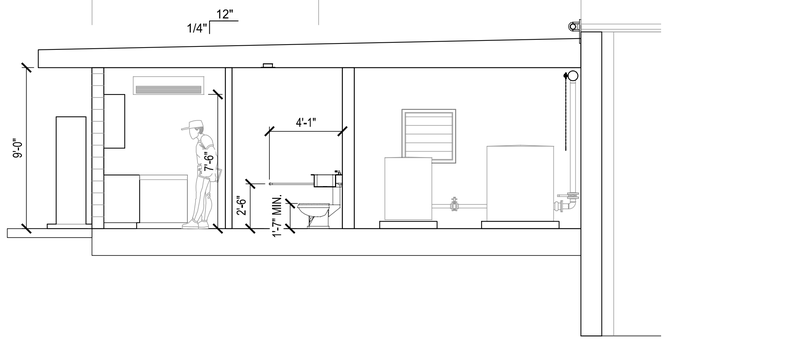

SECTION - A
SCALE: 1/4" = 1'-0"

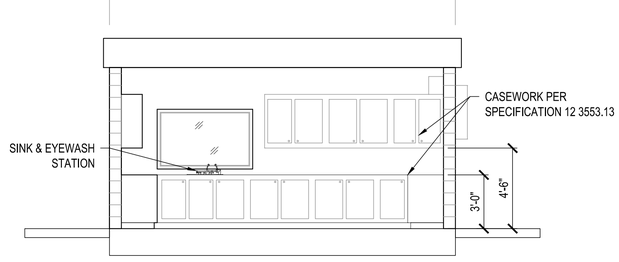

SECTION - B
SCALE: 1/4" = 1'-0"

THESE DRAWINGS ARE THE PROPERTY OF P.A.C.E. AND SHALL NOT BE REPRODUCED IN ANY MANNER NOR BE USED FOR CONSTRUCTION UNLESS STAMPED 'ISSUED FOR CONSTRUCTION'.

NO	BY	DATE	REVISIONS	DATE	APP.

Registered Professional Engineer (Civil) CERTIFICATE NO. 70097 TAYLOR B. PIERCE Signed STATE OF ARIZONA, U.S.A. Expires 12/31/28

PREPARED BY: PACE
DESIGNED BY: NE
DRAWN BY: DS, WW
CHECKED BY: TP
SCALE: AS NOTED
DATE: NOV 2025
JOB NO.: B614

TITLE: **BLOWER OPS ARCH ELEVATIONS & SECTIONS**

JOB: TOWN OF JEROME WASTEWATER TREATMENT PLANT — YAVAPAI CO. AZ

100% ISSUED FOR BID

PREPARED BY: TAYLOR B. PIERCE — R.C.E 70097 — DATE

PACE
Advanced Water Engineering
8723 E. VIA DE COMMERCIO, BLDG. 1, SUITE 1, SCOTTSDALE, AZ 85258
P.: (480) 991-3595 | www.pacewater.com

SHEET **A4.0**
70 OF 99 SHEETS

JOB NO. B614

W:\B614\Engineering\B614-30sheets\B614 - A2.3 BLOWER OPS ARCH SECTIONS.dwg - Tab: A4.0 - by reddington on 11/17/25 at 9:58:04 AM

TOWN OF JEROME WWTP
ELECTRICAL
JEROME, ARIZONA

GENERAL ELECTRICAL NOTES

1. ELECTRICAL WORK SHALL COMPLY WITH THE NATIONAL ELECTRIC CODE (2011), FEDERAL, STATE AND LOCAL JURISDICTION CODES.
2. ALL WORK SHALL BE DONE IN A NEAT, WORKMANLIKE, FINISHED AND SAFE MANNER, ACCORDING TO THE LATEST PUBLISHED NATIONAL ELECTRICAL CONTRACTORS ASSOCIATION STANDARDS OF INSTALLATION, UNDER COMPETENT SUPERVISION.
3. VISIT THE SITE PRIOR TO BIDDING TO BECOME FAMILIAR WITH EXISTING CONDITIONS AND ALL OTHER FACTORS WHICH MAY AFFECT THE EXECUTION OF THIS WORK. INCLUDE ALL RELATED COSTS IN THE INITIAL BID PROPOSAL.
4. CONTRACTOR IS RESPONSIBLE FOR VERIFYING LOCATIONS OF ALL EXISTING UTILITIES AND AVOIDING DAMAGE TO SAME. CONTRACTOR SHALL BE RESPONSIBLE FOR DAMAGE TO UTILITIES CAUSED AS A RESULT OF HIS WORK. CALL (602) 263–1100 FOR BLUE STAKES. IRRIGATION LINES LESS THAN 2" WILL NOT BE MARKED AND SHALL BE REPAIRED IN KIND BY THE CONTRACTOR.
5. PROPER PROTECTION OF THE CONSTRUCTION AREA FOR SAFETY SHALL BE THE RESPONSIBILITY OF THE CONTRACTOR. COVER ALL TRENCHES AT THE END OF EACH WORK DAY. BARRICADES SHALL BE INSTALLED AS DIRECTED BY THE EPCOR OR THE PROJECT INSPECTOR. THE SITE AND ALL WORK SHALL CONFORM TO OSHA REQUIREMENTS.
6. CONTRACTOR SHALL PAY FOR PERMITS AND INSPECTIONS AS MAY BE REQUIRED AND PROVIDE A CERTIFICATE OF INSPECTION TO THE EPCOR.
7. PROTECT ALL MATERIAL AND EQUIPMENT INSTALLED AGAINST DAMAGE BY OTHER TRADES, WEATHER CONDITIONS OR ANY OTHER CAUSES. EQUIPMENT FOUND DAMAGED OR IN OTHER THAN NEW CONDITION WILL BE REJECTED AS DEFECTIVE. ALL COMPONENTS SHALL BE FREE OF DUST, GRIT AND FOREIGN MATERIALS, AND LEFT AS NEW BEFORE FINAL ACCEPTANCE OF WORK.
8. LEAVE THE SITE CLEAN, REMOVE ALL DEBRIS, EMPTY CARTONS, TOOLS, CONDUIT, WIRE SCRAPS AND ALL MISCELLANEOUS SPARE EQUIPMENT AND MATERIALS USED IN THE WORK DURING CONSTRUCTION.
9. IT IS THE OBLIGATION OF THE CONTRACTOR TO ORGANIZE HIS WORK SO THAT A COMPLETE ELECTRICAL, INSTRUMENTATION, AND/OR CONTROL SYSTEM FOR THE FACILITY WILL BE PROVIDED AND SUPPORTED BY ACCURATE SHOP AND RECORD DRAWINGS, AND ALL O & M MANUALS.
10. ALL UNDERGROUND CONDUIT SHALL BE SCHEDULE 40 PVC, BURIED 24" MINIMUM BELOW FINISHED GRADE, UNLESS SPECIFICALLY NOTED OTHERWISE ON PLANS OR IN DETAILS.
11. PROVIDE EMT INDOOR AND GRS OUTDOOR FOR ABOVE GROUND CONDUIT. WHERE METALLIC CONDUITS COME IN CONTACT WITH DIRT, THEY SHALL BE HALF LAP WRAPPED WITH SCOTCH 50 TAPE TO 12" AFG. FITTINGS SHALL BE STEEL, THREADED TYPE WITH INSULATED THROATS. SECURELY ATTACH ALL SURFACE MOUNTED CONDUIT EVERY 10 FEET AND WITHIN 3 FEET OF EACH JUNCTION BOX, PER NEC ARTICLE 344.30. OUTDOOR FLEX CONDUIT SHALL BE LIQUID TITE UV RESISTANT (BLACK) FLEX CONDUIT.
12. UNDERGROUND VERTICAL AND HORIZONTAL 90 DEGREE BEND CONDUIT SHALL BE GRS HALF LAPPED WRAPPED WITH SCOTCHRAP 50 10–MIL TAPE TO 18" MIN ABOVE GRADE WITH A RADIUS OF NOT LESS THAN 18" (FACTORY BENDS ONLY SHALL BE USED)
13. UNDERGROUND CONDUITS SHALL BE A MINIMUM 1".
14. ALL FEEDERS AND BRANCH CIRCUIT WIRE SHALL BE COPPER TYPE XHHW (75 DEGREE C) FOR BELOW GRADE INSTALLATIONS (AND CONDUIT RISERS) AND THHN/THWN (75 DEGREE C) FOR ABOVE GRADE INSTALLATIONS. MINIMUM SIZE SHALL BE #12 AWG, UNLESS SPECIFICALLY NOTED OTHERWISE ON PLANS OR IN DETAILS. ALL WIRING SHALL BE IN CONDUIT.
15. A SEPARATE GREEN INSULATED EQUIPMENT GROUNDING CONDUCTOR (BOND) SHALL BE INSTALLED WITHIN EACH RACEWAY PER NEC CODE.
16. WHEN A PANEL IS SUPPLIED BY A FEEDER OR BRANCH CIRCUIT, ANY INSTALLED GROUNDED CONDUCTOR SHALL NOT BE CONNECTED TO THE EQUIPMENT GROUNDING CONDUCTOR (GEC) OR TO THE GROUNDING ELECTRODE(S) PER NEC ARTICLE 250.32(B).
17. BOND ALL ENCLOSURES PER NEC ARTICLE 250.96.
18. CONTRACTOR SHALL PLAN AND INSTALL WORK IN SUCH A MANNER AS TO CONFORM TO THE STRUCTURE, AVOID OBSTRUCTIONS, PRESERVE HEADROOM AND KEEP OPENINGS AND PASSAGEWAYS CLEAR.
19. CONTRACTOR SHALL PROVIDE ALL LABOR, MATERIAL, ETC. NECESSARY FOR A COMPLETE AND WORKABLE ELECTRICAL SYSTEM WHETHER OR NOT THESE ITEMS ARE SPECIFICALLY NOTED ON THESE DRAWINGS. INCIDENTAL ITEMS NOT INDICATED ON THE DRAWINGS, NOR MENTIONED IN SPECIFICATIONS THAT CAN BE LEGITIMATELY AND REASONABLY INFERRED TO BELONG TO THE WORK DESCRIBED OR BE NECESSARY IN GOOD PRACTICE TO PROVIDE A COMPLETE SYSTEM, SHALL BE FURNISHED AND INSTALLED AS THOUGH ITEMIZED HERE IN EVERY DETAIL.
20. CONTRACTOR IS RESPONSIBLE FOR AND SHALL PROVIDE ALL LABOR, MATERIAL, TRENCHING, CONDUIT, TRANSFORMER PAD AND OTHER REQUIRED EQUIPMENT PER UTILITY COMPANY PLANS AND SPECIFICATIONS NECESSARY FOR A COMPLETE UNDERGROUND CONDUIT SYSTEM FROM THE UTILITY POINT OF SERVICE TO THE UTILITY CO. TRANSFORMER AND FROM THE UTILITY CO. TRANSFORMER TO THE ELECTRICAL SERVICE ENTRANCE SECTION.
21. ALL TRENCHING, CONDUITS, ETC. SHALL BE ROUTED AND INSTALLED IN SUCH A MANNER THAT WILL NOT DAMAGE EXISTING FACILITIES. SHOULD DAMAGE OCCUR, IT WILL BE THE CONTRACTORS RESPONSIBILITY TO REPAIR DAMAGE TO THE SATISFACTION OF THE EPCOR OR INSPECTOR.
22. ALL CONDUIT RUNS SHOWN ON THIS PLAN ARE SCHEMATIC IN NATURE. THE CONTRACTOR SHALL MAKE SURE THAT ALL CONDUIT, ETC. FALLS WITHIN THE CONSTRUCTION AREA/RIGHT OF WAY. (THIS INCLUDES MAINTAINING ALL REQUIRED CLEARANCES.)
23. WHEN CROSSING PATHWAYS OR SIDEWALKS, CONTRACTOR SHALL BORE UNDER EXISTING CONCRETE WALKS AND SAWCUT ASPHALT WALKS. ASPHALT WALKS SHALL BE REPLACED IN KIND.
24. CONTRACTOR SHALL GUARANTEE WORK INSTALLED UNDER THE CONTRACT TO BE FREE FROM DEFECTIVE WORKMANSHIP AND MATERIALS, USUAL WEAR EXPECTED, AND SHOULD ANY SUCH DEFECTS DEVELOP WITHIN A PERIOD OF ONE YEAR ACCEPTANCE OF THE PROJECT BY THE EPCOR, THE CONTRACTOR SHALL REPAIR AND/OR REPLACE ANY DEFECTIVE ITEMS AND DAMAGE RESULTING FROM FAILURE OF THESE ITEMS, AT NO EXPENSE WHATSOEVER TO THE EPCOR.
25. CONTRACTOR SHALL IDENTIFY EQUIPMENT PANELS, DISCONNECTS, PANELS, INSTRUMENTS ETC. USING P&ID NOMENCLATURE WITH 3/32–INCH THICK LAMINATED PHENOLIC TYPE NAMEPLATES WITH 1/4–INCH MINIMUM HEIGHT LETTERS. NAMEPLATE TO BE BLACK MATTE FINISH SURFACE WITH WHITE LETTER ENGRAVING AND BE UV RESISTANT. ATTACH NAMEPLATE TO THE OUTSIDE PANEL FACE WITH TWO STAINLESS STEEL SELF–TAPPING SCREWS. NAMEPLATE SHALL READ THE EQUIPMENT NAME AND P&ID NOMENCLATURE. SEE NEC ARTICLE 230.70(B) FOR SERVICE EQUIPMENT.
26. ALL CIRCUITS SHALL BE LEGIBLY IDENTIFIED AT THE PANEL, JUNCTION BOXES AND AT ALL EQUIPMENT IN A PERMANENT MANNER (I.E. ETCHED PLATES, CONDUCTOR TAG, PERMANENT MARKER, ETC.). THE LABELING SHALL INCLUDE PANEL CIRCUIT NUMBER, "TO" AND "FROM" IDENTIFICATION, AND MARKED "SPARE" WHERE APPLICABLE.
27. CONTRACTOR SHALL TEST ELECTRICAL SYSTEM FOR SHORT CIRCUITS AND MEGGER TEST FEEDERS AND BRANCH CIRCUIT WIRING. CONTRACTOR SHALL INSURE LOW IMPEDANCE GROUND PATH SYSTEM. PROVIDE CERTIFIED TEST RESULTS FOR MEGGER TEST TO EPCOR UPON COMPLETION OF PROJECT.
28. CONTRACTOR SHALL PERFORM HIGH POTENTIAL (HIPOT) TESTING WHEN REQUIRED BY LOCAL JURISDICTION OR EPCOR.
29. CONTRACTOR SHALL PROVIDE A GROUND–FAULT COORDINATION STUDY AND PERFORM RECOMMENDED SETTINGS ON NEW OVERCURRENT PROTECTION DEVICES, PROVIDE LABELS ON EQUIPMENT INDICATING SETTINGS.
30. CONTRACTOR SHALL PROVIDE AN ARC–FLASH STUDY, PROVIDE ALL APPLICABLE LABELS ON NEW EQUIPMENT AFTER STUDY IS COMPLETED.
31. ALL CONDUIT AND J–BOXES SHOWN SHALL BE CONCEALED WHEN POSSIBLE. WHEN NOT POSSIBLE, CONDUIT AND J–BOXES MAY BE SURFACE MOUNTED WITH PERMISSION OF THE EPCOR OR EPCOR'S REPRESENTATIVE.
32. CONTRACTOR SHALL COORDINATE ALL EQUIPMENT CONNECTIONS WITH EQUIPMENT SUPPLIER PRIOR TO ROUGH–IN. PROVIDE ADDITIONAL FUSED DISCONNECT SWITCHES AND CONTROLS IF OVERCURRENT PROTECTION OR CONTROLS IS NOT INTEGRAL WITH UNITS.
33. ALL EQUIPMENT SHALL BE FUSE SIZED PER MANUFACTURES RECOMMENDATIONS AND U.L. APPROVAL.
34. ELECTRICAL DEVICES, DISCONNECT SWITCHES, ETC., SHALL BE SUPPORTED INDEPENDENT OF AND ISOLATED FROM EQUIPMENT VIBRATIONS.
35. FULL LOAD AMPS (FLA) SIZES, AS NOTED IN THESE DRAWINGS, ARE BASED ON SPECIFIED EQUIPMENT DATA. CONTRACTOR SHALL VERIFY NAMEPLATE FLA OF EQUIPMENT SUPPLIED AND COORDINATE ACCORDINGLY PER EQUIPMENT SUPPLIERS RECOMMENDATIONS.
36. ALL OUTDOOR ELECTRICAL EQUIPMENT SHALL BE NEMA–3R OR NEMA–4 ENCLOSURES.
37. CONDUITS OR RACEWAYS ROUTED FROM INDOORS TO OUTDOORS OR AS DESCRIBED IN NEC 300.7(A), SHALL BE SEALED WITH A PLIABLE SEALING COMPOUND AT A CONDUIT BODY OR AT A JUNCTION BOX BEFORE THE CONDUIT ENTERS THE COLDER ENVIRONMENT.
38. CONDUITS OR RACEWAYS INSTALLED IN AREAS WHERE ELEVATION CHANGES MAY CAUSE WATER OR MOISTURE TO ENTER THE ELECTRICAL EQUIPMENT THROUGH THE CONDUIT SHALL BE SEALED WITH A HERMETIC CONDUIT SEAL AT BOTH ENDS OF THE CONDUIT OR RACEWAY.
39. MATERIALS SHALL BE NEW AND OF THE BEST QUALITY WITH MANUFACTURER'S NAME PRINTED THEREON. MATERIALS SHALL BE MANUFACTURED IN ACCORDANCE WITH NEMA, ANSI, UNDERWRITER'S LABORATORY OR OTHER APPLICABLE STANDARDS AND RATED FOR HEAVY DUTY SERVICE.
40. ALL WIRING DEVICES SHALL BE SPECIFICATION GRADE. ALL 15 AND 20 AMP, 125 AND 250 VOLT, NONLOCKING RECEPTACLES INSTALLED OUTDOORS SHALL BE LISTED WEATHER–RESISTANT TYPE. ALL WEATHERPROOF WHILE IN–USE RECEPTACLE COVERS SHALL BE METAL.
41. SELECTION OF MATERIALS SHALL BE IN STRICT ACCORDANCE WITH THE DRAWINGS AND/OR SPECIFICATIONS. THE USE OF MANUFACTURER'S NAME, MODEL, AND NUMBER IS INTENDED TO ESTABLISH STYLE, QUALITY, APPEARANCE, USEFULNESS AND BID PRICE. CONTRACTOR SHALL SUBMIT TO THE EPCOR OR EPCOR'S REPRESENTATIVE FOR REVIEW AND APPROVAL (PRIOR TO ORDERING MATERIALS) COPIES OF EQUIPMENT SHOP DRAWINGS AS FOLLOWS: 1) LIGHT FIXTURES, 2) PUMP CONTROL PANEL 3) RTU/PLC 4) SERVICE ENTRANCE SECTION, 5) ELECTRICAL EQUIPMENT, 6) DISCONNECT SWITCHES, 7) TIME CLOCKS AND OTHER CONTROLS, 8) LIGHTING CONTACTORS AND 9) PULL BOXES. AT THE TIME OF EACH SUBMITTAL, THE CONTRACTOR SHALL DEFINE AND DELINEATE IN WRITING ANY DEVIATIONS FROM THE CONTRACT DOCUMENTS. THE REVIEW WILL BE ONLY FOR CONFORMANCE WITH THE DESIGN CONCEPT OF THE WORK AND FOR COMPLIANCE WITH THE INFORMATION CONTAINED IN THE CONTRACT DOCUMENTS. THE REVIEW OF A SPECIFIED ITEM, AS SUCH, WILL NOT INDICATE REVIEW OF THE ASSEMBLY IN WHICH THE ITEM FUNCTIONS. REVIEW BY THE EPCOR OR EPCOR'S REPRESENTATIVE WILL NOT RELIEVE THE CONTRACTOR FROM RESPONSIBILITY FOR ANY ERRORS OR OMISSIONS IN THE SUBMITTALS NOR FROM HIS RESPONSIBILITY FOR COMPLYING WITH THE CONTRACT DOCUMENTS.
42. THE SUBMITTALS SHALL BE NEATLY GROUPED AND ORGANIZED. PERTINENT INFORMATION SHALL BE HIGHLIGHTED, AND THE SPECIFIC PRODUCT SHALL BE IDENTIFIED. ALL SUBMITTALS SHALL BE COMPLETE, AND PRESENTED IN ONE PACKAGE. THE SUBMITTAL SHALL INCLUDE A COMPLETE LIST OF THE EQUIPMENT AND MATERIALS, INCLUDING THE MANUFACTURER'S NAME, PRODUCT SPECIFICATION, DESCRIPTIVE DATA, TECHNICAL LITERATURE, PERFORMANCE CHARTS, CATALOG CUTS, INSTALLATION INSTRUCTIONS, AND SPARE PART RECOMMENDATIONS FOR EACH DIFFERENT ITEM OF THE EQUIPMENT SPECIFIED.
43. ELECTRICAL CONTRACTOR SHALL HAVE A MINIMUM OF 5 YEARS EXPERIENCE WORKING IN THE WATER/WASTEWATER INDUSTRY AND PROVIDE REFERENCES.

ENGINEER OF RECORD

PACE ADVANCED WATER ENGINEERING
8723 E. VIA DE COMMERCIO, #A–204
SCOTTSDALE, AZ 85258
PHONE: (480) 991–3595
CONTACT: TAYLOR PIERCE
CONTACT: TPIERCE@PACEWATER.COM

ELECTRICAL ENGINEER

WRIGHT ENGINEERING CORPORATION
165 EAST CHILTON DRIVE
CHANDLER, AZ 85225
PHONE: (480) 497–5829
CONTACT: JACOB BIELEFELDT
EMAIL: JBIELEFELDT@WRIGHTENGINEERING.US

PROJECT ADDRESS

TOWN OF JEROME WASTEWATER TREATMENT PLANT
SEWER PLANT ROAD
JEROME, AZ 86331

PRINCIPAL OWNER

TOWN OF JEROME
600 CLARK STREET, P.O. BOX 335
JEROME, AZ 86331

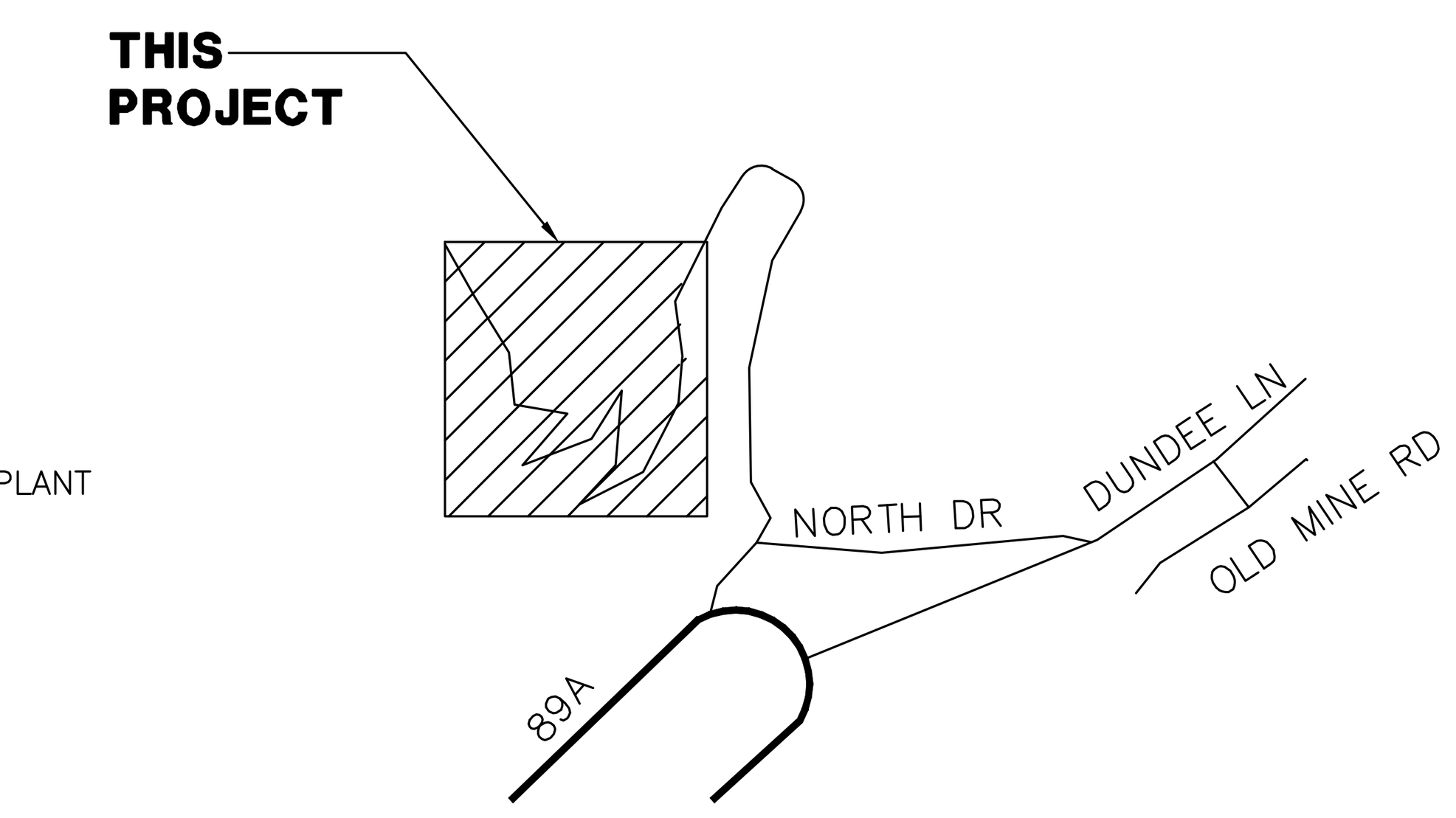

VICINITY MAP
NO SCALE

NORTH

SHEET INDEX

SHEET E1.1 ELECTRICAL COVER SHEET
SHEET E1.2 ELECTRICAL NOTES + LEGEND
SHEET E2.1 ELECTRICAL SINGLE LINE DIAGRAM I
SHEET E2.2 ELECTRICAL SINGLE LINE DIAGRAM II
SHEET E2.3 ELECTRICAL LOAD CALCULATIONS
SHEET E2.4 ELECTRICAL CONDUIT + WIRE TABLES I
SHEET E2.5 ELECTRICAL CONDUIT + WIRE TABLES II
SHEET E3.1 ELECTRICAL PROPOSED SITE PLAN
SHEET E3.2 ELECTRICAL SBR PLAN
SHEET E3.3 ELECTRICAL DEWATERING PAD
SHEET E3.4 ELECTRICAL BLOWER OPS
SHEET E3.5 ELECTRICAL DRYING BED LIFT STATION
SHEET E3.6 ELECTRICAL OVERFLOW BASIN
SHEET E4.1 ELECTRICAL DETAILS I
SHEET E4.2 ELECTRICAL DETAILS II
SHEET E4.3 ELECTRICAL DETAILS III
SHEET E4.4 ELECTRICAL DETAILS IV
SHEET E4.5 ELECTRICAL DETAILS V
SHEET E4.6 ELECTRICAL DETAILS VI
SHEET E5.1 ELECTRICAL SCHEMATICS I
SHEET E5.2 ELECTRICAL SCHEMATICS II
SHEET E5.3 ELECTRICAL SCHEMATICS III

LIGHT FIXTURE SCHEDULE

SYMBOL	LETTER ID	MANUFACTURER	CATALOG NUMBER	FINISH COLOR	VOLTS	LAMP	LUMENS (MIN)	CCT	MOUNTING HEIGHT	TYPE	DETAIL
	A	LITHONIA LIGHTING	DSX1–LED–P2–30K–80CRI–T5W–MVOLT–PER–SPD20KV–DF–HA–CCE–DBLXD WITH PHOTOCELL, CONTRACTOR SHALL INSTALL IN LINE WITH LIGHT SWITCH TO OVERRIDE.	BLACK	240	68W LED	9,940	3000K	15'–0"	AREA LIGHT	POLE MOUNTED, SEE DETAIL D SHEET SE4.1
	B	LITHONIA LIGHTING	2VTL2–48L–ADP–LP940–BDP	WHITE	120	38.3W LED	4,116	4000K	*	BUILDING CEILING TROFFER 2X2	*CEILING MOUNTED, COORDINATE SURFACE TYPE BY OTHERS.
	C	LITHONIA LIGHTING	WDGE2 LED–P4 30K–80CRI–TFTM–MVOLT–PE–CCE–PIR–DBLXD– (2 OVER DOOR SHALL HAVE BATTERY BACK UP E10WH), CONTRACTOR SHALL INSTALL IN LINE WITH LIGHT SWITCH TO OVERRIDE.	BLACK	120	47W LED	4,002	3000K	*	BUILDING WALLPACK LIGHT	*WALL MOUNTED, 1 FOOT ABOVE DOOR
	D	LITHONIA LIGHTING	FEX–L24–9000LM–FGFL–WD–MVOLT–30K–90CRI–SPD10KV–IP67–DNAXD CR	BLACK	120	62.5W LED	6,424	3000K	*	CANOPY LIGHT	*CEILING
	E	LITHONIA LIGHTING	AFF–OEL–DWHGXD–UVOLT–LTP–SDRT–FCT–	BLACK	120	2.5W LED	N/A	N/A	*	EMERGENCY EXIT LIGHT	*WALL MOUNTED ABOVE DOOR.
	F	WAC LIGHTING	WS–180137–30K–90–2130	MATCH WATER FAUCET FIXTURE FINISH	120	28W LED	2,130	3000K	*	BUILDING RESTROOM LIGHT	*WALL MOUNTED ABOVE MIRROR.
	G	HOLOPHANE	HPFS–P3–55PG–MVOLT–30K–YMS–20KV–CNP123FT–UBV–DBLXD	BLACK	240	83W LED	12,627	3000K	*	SBR CATWALK FLOODLIGHT, CLASS 1 DIVISION 2	*SEE DETAIL.

NOTE: CONTRACTOR SHALL VERIFY ARCHITECTURE ELEMENTS FOR MOUNTING AND INSTALLATION PRIOR TO ORDERING. CONTRACTOR MAY SUBMIT ALTERNATIVES FOR ENGINEER APPROVED EQUAL.

WRIGHT engineering corporation
ELECTRICAL ENGINEERING AND DESIGN
165 EAST CHILTON DRIVE
CHANDLER, ARIZONA 85225
PHONE: 480.497.5829
FAX: 480.497.5807
www.wrightengineering.us
Wright Project # 23319

CALL TWO WORKING DAYS BEFORE YOU DIG
602-263-1100
1-800-STAKE-IT
(OUTSIDE MARICOPA COUNTY)

ISSUED FOR BID

NO	BY	DATE	REVISIONS	DATE	APP.

Registered Professional Engineer (Electrical) Certificate No. 73954 JACOB BIELEFELDT Date Signed 11-24-2025 Expires 9–30–27

PREPARED BY: WRIGHT ENGINEERING
DESIGNED BY: JHB
DRAWN BY: XAG
CHECKED BY: JHB
SCALE: AS NOTED
DATE NOV 2025
JOB NO. B614

TITLE ELECTRICAL COVER SHEET

JOB TOWN OF JEROME WASTEWATER TREATMENT PLANT
YAVAPAI CO. AZ

PREPARED BY: PACE Advanced Water Engineering
8723 E. VIA de COMMERICO, SUITE A-204 | SCOTTSDALE, CA 85258
P: (408) 991-3595 | www.pacewater.com

SHEET E1.1
71 OF 99 SHEETS
JOB NO. B614

THESE DRAWINGS ARE THE PROPERTY OF P.A.C.E. AND SHALL NOT BE REPRODUCED IN ANY MANNER NOR BE USED FOR CONSTRUCTION UNLESS STAMPED "ISSUED FOR CONSTRUCTION".

H:\2023\23319-Jerome WWTP\23319-E.dwg - Tab: E1.1 - by jacobb on 11/24/25 at 6:56:46 PM

ELECTRICAL SYMBOLS

SINGLE LINE DIAGRAMS

Symbol	Description
A	AMMETER
V	VOLTMETER
M	METER
KWH	KILOWATT HOUR METER
AS	AMMETER SWITCH
VS	VOLTMETER SWITCH
GFP	GROUND FAULT PROTECTION
	POWER TRANSFORMER SEE NOTE 1.
A-24	CIRCUIT BREAKER, 3 POLE UNLESS OTHERWISE INDICATED
	DISCONNECT SWITCH, 3 POLE UNLESS OTHERWISE INDICATED
	OIL FUSE CUTOUTS
	FUSE SEE NOTE 3.
	TRANSFER SWITCH, AUTOMATIC
RV SIZE 1	MAGNETIC MOTOR STARTER."1" INDICATES SIZE 1. RV INDICATES REDUCED VOLTAGE. 2S INDICATES 2 SPEED. R INDICATES REVERSING.
	MAGNETIC CONTACTOR
12	CONDUIT NUMBER 12. SEE CONDUIT AND WIRING SCHEDULE FOR SIZES AND QUANTITIES OF CONDUIT AND WIRES.
GND	GROUND
K	KIRK KEY INTERLOCKING OF EQUIPMENT
2 HP	EQUIPMENT FURNISHED, INSTALLED AND CONNECTED UNDER ANOTHER SECTION OF THE CONTRACT.
PFR	PHASE FAILURE RELAY
SA	SURGE ARRESTER
#	EXISTING MOTOR (HP SHOWN)
#	NEW MOTOR (ESTIMATED HP SHOWN)
#	FUTURE MOTOR (ESTIMATED HP SHOWN)
1	MANHOLE
	EYS SEAL

NOTES: (ELECTRICAL SYMBOLS)

1. POWER TRANSFORMERS SHALL BE DRY TYPE 480–208Y/120 VOLTS, 3 PHASE 4 WIRE UNLESS OTHERWISE INDICATED.

2. CONTROL TRANSFORMER SHALL BE DRY TYPE 480–120 VOLTS 1 PHASE UNLESS OTHERWISE INDICATED. SEE CONTROL WIRING DIAGRAMS FOR USE OF 120 VOLT CONTROL CIRCUITS CONTROL TRANSFORMERS SHALL BE SIZED TO HANDLE THE LOADS OF ALL RELAYS, PILOT LIGHTS, ETC. CONNECTED THERE TO PLUS 50 VA EXTRA CAPAOWNER.

3. LOCATED IN OR ON MOTOR CONTROL CENTER UNLESS OTHERWISE INDICATED.

CONTROL WIRING DIAGRAMS

NORMALLY OPEN	NORMALLY CLOSED	DEVICE
		CONTACT
		LIMIT SWITCH
		LIMIT SWITCH HELD CLOSED
		LIMIT SWITCH HELD OPEN
		PRESSURE OR VACUUM SWITCH
		LIQUID LEVEL SWITCH
		TEMPERATURE ACTUATED SWITCH
		FLOW SWITCH (AIR, WATER, ETC.)
		PUSH BUTTON SINGLE CIRCUIT MOMENTARY CONTACT. SEE NOTE 3.
		PUSH BUTTON SINGLE CIRCUIT LOCK–OUT(LOCATED AT MOTOR UNLESS OTHERWISE NOTED)
		TIMED CONTACT– CONTACT ACTION RELAY ON ENERGIZATION.
		TIMED CONTACT– CONTACT ACTION RELAY ON DE–ENERGIZATION.
		ON–OFF SWITCH. SEE NOTE 3.
ESB		EMERGENCY STOP PUSH BUTTON (MAINTAINED CONTACT)
STOP	START	STOP –START PUSH–BUTTON STATION (MAINTAINED CONTACTS). SEE NOTE 3.
H, O, A		HAND–OFF–AUTO SELECTOR SWITCH SEE NOTE 3. (THREE POSITION).
		TWO POSITION SELECTOR SWITCH SEE NOTE 3.
R		PILOT LIGHT, Y=YELLOW, R=RED, A=AMBER, SEE NOTE 3. B=BLUE, W=WHITE, G=GREEN.
		BELL
		HORN OR SIREN
CR		CONTROL RELAY SEE NOTE 3.
M		STARTER COIL. SEE NOTE 3.
TDR		TIME DELAY RELAY. (0–30 SECONDS UNLESS OTHERWISE NOTED). SEE NOTE 3.
OL'S		MOTOR STARTER OVERLOAD RELAY CONTACTS
		CONTROL TRANSFORMER. SEE NOTES 2
		MANUAL MOTOR STARTER
		SOLENOID OPERATED CONTROL VALVE
1		120 VOLT, 1 PHASE, MOTOR (UNLESS OTHERWISE NOTED)
RTM		RUNNING TIME METER. SEE NOTE 3. (ELAPSED TIME METER)
		SPACE HEATERS. (LOCATED AT MOTOR UNLESS OTHERWISE NOTED).
		TERMINALS IN MOTOR CONTROL CENTER/MCP CONTACT OR DEVICE REMOTE FROM MOTOR CONTROL CENTER/MCP
		TERMINALS IN MOTOR CONTROL CENTER/MCP CONTACT IN MOTOR CONTROL CENTER FOR CONNECTION TO REMOTE DEVICE/MCP
		DEVICE SIGNAL OUTPUT
		DEVICE SIGNAL INPUT

PLANS

Symbol	Description
	CONDUIT RUN CONCEALED UNDER SLAB OR BELOW GRADE. (CONCEALED IN SLAB WHERE SO NOTED OR WHERE ALLOWED PER SPECIFICATIONS).
	CONDUIT RUN EXPOSED UNLESS OTHERWISE NOTED
	EXISTING CONDUIT RUN
	HASH MARKS INDICATE QUANTITY OF #12 WIRES IN CONDUIT (PLUS 1#12 GROUND WIRE) EXCEPT NO HASH MARKS=3/4", 2#12 (PLUS 1#12 GROUND WIRE) UNLESS OTHERWISE NOTED. 3/4", 3#12 — 1", 6#12 3/4", 4#12 — 1", 7#12 3/4", 5#12 — 1", 8#12
L(1,3)	HOMERUN TO PANEL L, CIRCUITS 1 AND 3
	GROUND WIRE
	CONDUIT UP (OUT TOP OF EQUIPMENT)
	CONDUIT DOWN (OUT BOTTOM OF EQUIPMENT)
	CONDUIT STUBBED OUT AND CAPPED
	LIGHTING FIXTURE MOUNTED ON POLE OR POST OR ABOVE PLATFORM
	CEILING MOUNTED LIGHTING FIXTURE
	BRACKET MOUNTED LIGHTING FIXTURE
	FLOODLIGHT
	FLUORESCENT LIGHTING FIXTURE
	POLE MOUNTED LIGHT FIXTURE
	EXIT LIGHT
	RECESSED LIGHTING FIXTURE
	LIGHTING FIXTURES CONNECTED TO EMERGENCY CIRCUITS
A 1/100	LIGHTING FIXTURE TYPE A, 100 WATTS, WITH 1 LAMP. SEE LIGHTING FIXTURE SCHEDULE
$	SINGLE POLE, SINGLE THROW TOGGLE SWITCH (AT +48" OR AS NOTED)
$2	DOUBLE POLE, SINGLE THROW TOGGLE SWITCH (AT +48" OR AS NOTED)
$3	THREE–WAY TOGGLE SWITCH (AT +48" OR AS NOTED)
$4	FOUR–WAY TOGGLE SWITCH (AT +48" OR AS NOTED)
$M	MANUAL MOTOR STARTER (AT +48" OR AS NOTED)
$a	OUTLETS SHOWN WITH SUBSCRIPT "a" ADJACENT TO THEM SHALL BE CONTROLLED BY S a
	DUPLEX CONVENIENCE RECEPTACLE AT +12" OR AS NOTED
	SINGLE CONVENIENCE RECEPTACLE AT +12" OR AS NOTED
	SPECIAL PURPOSE RECEPTACLE AT +12" OR AS NOTED, RATING AS INDICATED
	JUNCTION BOX, SIZE AS REQUIRED BY CODE
T	THERMOSTAT OUTLET AT +54"
	CLOCK OUTLET AT +7'–6" OR AS NOTED
	TELEPHONE OUTLET AT +12" OR AS NOTED
	TELEPHONE FLOOR OUTLET
	HORN
P	CONTROL DEVICE P = PRESSURE SWITCH ZS = LIMIT SWITCH L = LEVEL SWITCH V = CONTROL VALVE
	CONTROL STATION: PUSH–BUTTON STATION OR SELECTOR SWITCH. SEE CONTROL WIRING DIAGRAMS FOR REQUIREMENTS.
M	EXISTING MOTOR
M	NEW MOTOR
M	FUTURE MOTOR
	GROUND WELL
	GROUND ROD
	DISCONNECT SWITCH. SEE SINGLE LINE DIAGRAM FOR SIZE.
	LIGHTING PANEL. SURFACE MOUNTED.
	SWITCHBOARD, DISTRIBUTION PANEL OR MOTOR CONTROL CENTER
12	CONDUIT NUMBER 12. SEE CONDUIT AND WIRING SCHEDULE FOR SIZES AND QUANTITIES OF CONDUIT AND WIRES.
+12"	INDICATES HEIGHT FROM FINISHED FLOOR OR GRADE TO CENTERLINE OF DEVICE.
1	INDICATES TO REFER TO NOTE (1) ON DRAWING
W.P.	WEATHERPROOF. PROVIDE GASKETS AS REQUIRED
C.O.	CONDUIT ONLY
FE–184	INSTRUMENTATION DEVICE. SEE PROCESS AND INSTRUMENTATION DRAWINGS FOR DESCRIPTIONS.
	PULL BOX (SIZE AS REQUIRED)
	OUTPUT TERMINAL
	INPUT TERMINAL

CONSTRUCTION NOTES

(1) REMOVE ALL EXISTING CUSTOMER OWNED OVERHEAD ELECTRICAL AND POWER POLE AND DISPOSE OF PROPERLY. COORDINATE WITH OWNER FOR SCHEDULING.

(2) REMOVE EXISTING SES AND PANEL AND DISPOSE OF PROPERLY. COORDINATE DISCONNECTION OF THE METER AND SECONDARY CONDUCTORS WITH APS

(3) DE–ENERGIZE EXISTING LAB BUILDING UPON COMPLETION OF CONSTRUCTION OF THE NEW LAB. REMOVE ALL EXISTING CONDUCTORS AND ELECTRICAL EQUIPMENT AND DISPOSE OF PROPERLY. COORDINATE ALL WORK WITH OWNER AND POWER COMPANY PRIOR TO DE–ENERGIZATION.

(4) COORDINATE WITH APS TO REPLACE THE EXISTING POLE MOUNTED SINGLE PHASE TRANSFORMER. APS TO INSTALL THREE PHASE TRANSFORMERS. CONTRACTOR SHALL VERIFY LOCATION OF NEW TRANSFORMER WITH APS. APS PLANS WILL DETERMINE EXACT LOCATION AND TAKE PRECEDENCE OVER THESE DRAWINGS. COORDINATE ALL WORK WITH APS.

(5) APS SERVICE LINE. TRENCH AND INSTALL CONDUIT PER APS SPECIFICATIONS. POWER COMPANY PLANS WILL DETERMINE EXACT LOCATION OF CONDUIT AND TAKE PRECEDENCE OVER THESE DRAWINGS.

(6) SES, 400 AMP, 277/480V, 3Ø, 4W, SEE DETAIL 1 ON E4.1.

(7) MINI–POWER ZONE AND PANELBOARD. SEE DETAIL 1 ON E4.1.

(8) ATS 400A 277/480V, 3Ø, 4W, SEE DETAIL 2 ON SHEET E4.1.

(9) GENERATOR 125KW, 277/480V, 3Ø, 4W, SEE DETAIL 1 ON E4.3.

(10) TRANSFORMER 50KVA 480V – 120/240V 1Ø, SEE DETAIL 2 ON SHEET E4.1.

(11) PANELBOARD, 120/240V, 1Ø, 3W, SEE DETAIL 2 ON E4.1.

(12) DISTRIBUTION PANEL DSP–1 400A 277/480V, 3Ø, 4W, SEE DETAIL 2 ON SHEET E4.1.

(13) ELECTRICAL CONTRACTOR SHALL INSTALL POWER FEED TO MINI SPLIT AIR CONDITIONER AND HEAT PUMP & MAKE ALL 240V CONNECTIONS.

(14) TANKLESS WATER HEATER & DISCONENCT. ELECTRICAL CONTRACTOR SHALL MAKE ALL POWER AND CONTROL CONNECTIONS PER THESE PLANS AND SPECIFICATIONS AND THE MANUFACTURERS REQUIREMENTS.

(15) GROUNDING ELECTRODE CONDUCTORS, GROUND ROD, AND INSPECTION WELL FOR ONLY THE FIRST GROUND ROD, PER SINGLE LINE DIAGRAMS AND DETAILS ON SHEET E4.6.

(16) LIGHTNING PROTECTION SYSTEM, PER NFPA AND DETAIL 6 ON SHEET E4.6

(17) CLASSIFIED SEAL OFF LISTED FOR CLASS 1 DIV 1. LOCATE WITHIN 10 FEET OF CLASSIFIED AREA BOUNDARY. PVC COATED RMS EYS TYPE OR EQUIVALENT. SEAL SHALL HAVE SEALING COMPOUND CHICO, OR EQUAL.

(20) 20A HEADWORKS CONTROL PANEL, BY VENDOR CLASS 1 DIVISION 2 LISTED. ELECTRICAL CONTRACTOR SHALL MAKE ALL POWER AND CONTROL CONNECTIONS PER THESE PLANS AND SPECIFICATIONS AND THE MANUFACTURERS REQUIREMENTS. SEE DETAIL 1 ON SHEET E4.4.

(21) INFLUENT COARSE SCREEN MOTOR. ELECTRICAL CONTRACTOR SHALL MAKE ALL POWER AND CONTROL CONNECTIONS PER THESE PLANS AND SPECIFICATIONS AND THE MANUFACTURERS REQUIREMENTS.

(22) INFLUENT CONVEYOR MOTOR. ELECTRICAL CONTRACTOR SHALL MAKE ALL POWER AND CONTROL CONNECTIONS PER THESE PLANS AND SPECIFICATIONS AND THE MANUFACTURERS REQUIREMENTS.

(23) POTABLE SOLENOID VALVE AT HEADWORKS. ELECTRICAL CONTRACTOR SHALL MAKE ALL POWER AND CONTROL CONNECTIONS PER THESE PLANS AND SPECIFICATIONS AND THE MANUFACTURERS REQUIREMENTS.

(24) ULTRASONIC LEVEL TRANSDUCER. ELECTRICAL CONTRACTOR SHALL MAKE ALL POWER AND CONTROL CONNECTIONS PER THESE PLANS AND SPECIFICATIONS AND THE MANUFACTURERS REQUIREMENTS.

(30) SBR PANEL BY VENDOR, ELECTRICAL CONTRACTOR SHALL MAKE ALL POWER AND CONTROL CONNECTIONS PER THESE PLANS AND SPECIFICATIONS AND THE MANUFACTURERS REQUIREMENTS.

(31) SBR INFLUENT VALVE. ELECTRICAL CONTRACTOR SHALL MAKE ALL POWER AND CONTROL CONNECTIONS PER THESE PLANS AND SPECIFICATIONS AND THE MANUFACTURERS REQUIREMENTS.

(32) SBR SUBMERSIBLE MIXER. ELECTRICAL CONTRACTOR SHALL MAKE ALL POWER AND CONTROL CONNECTIONS PER THESE PLANS AND SPECIFICATIONS AND THE MANUFACTURERS REQUIREMENTS.

(33) WAS TRANSFER PUMP. ELECTRICAL CONTRACTOR SHALL MAKE ALL POWER AND CONTROL CONNECTIONS PER THESE PLANS AND SPECIFICATIONS AND THE MANUFACTURERS REQUIREMENTS.

(34) DECANT MOTOR. ELECTRICAL CONTRACTOR SHALL MAKE ALL POWER AND CONTROL CONNECTIONS PER THESE PLANS AND SPECIFICATIONS AND THE MANUFACTURERS REQUIREMENTS.

(35) SBR DECANT VALVE. ELECTRICAL CONTRACTOR SHALL MAKE ALL POWER AND CONTROL CONNECTIONS PER THESE PLANS AND SPECIFICATIONS AND THE MANUFACTURERS REQUIREMENTS.

(36) DO TRANSMITTER AND ANALYZER. ELECTRICAL CONTRACTOR SHALL MAKE ALL POWER AND CONTROL CONNECTIONS PER THESE PLANS AND SPECIFICATIONS AND THE MANUFACTURERS REQUIREMENTS.

(37) SUBMERSIBLE PRESSURE TRANSDUCER. ELECTRICAL CONTRACTOR SHALL MAKE ALL POWER AND CONTROL CONNECTIONS PER THESE PLANS AND SPECIFICATIONS AND THE MANUFACTURERS REQUIREMENTS.

(38) LEVEL FLOAT. ELECTRICAL CONTRACTOR SHALL MAKE ALL POWER AND CONTROL CONNECTIONS PER THESE PLANS AND SPECIFICATIONS AND THE MANUFACTURERS REQUIREMENTS.

(39) SBR MOTOR CONTROL PANEL, PROVIDE AND INSTALL. ELECTRICAL CONTRACTOR SHALL MAKE ALL POWER AND CONTROL CONNECTIONS PER THESE PLANS AND SPECIFICATIONS AND THE MANUFACTURERS REQUIREMENTS.

(40) SBR EFFLUENT VALVE. ELECTRICAL CONTRACTOR SHALL MAKE ALL POWER AND CONTROL CONNECTIONS PER THESE PLANS AND SPECIFICATIONS AND THE MANUFACTURERS REQUIREMENTS.

(41) FLOW METER. ELECTRICAL CONTRACTOR SHALL MAKE ALL POWER AND CONTROL CONNECTIONS PER THESE PLANS AND SPECIFICATIONS AND THE MANUFACTURERS REQUIREMENTS.

(42) SBR AIR VALVE. ELECTRICAL CONTRACTOR SHALL MAKE ALL POWER AND CONTROL CONNECTIONS PER THESE PLANS AND SPECIFICATIONS AND THE MANUFACTURERS REQUIREMENTS.

(50) VARIABLE FREQUENCY DRIVE. ELECTRICAL CONTRACTOR SHALL MAKE ALL POWER AND CONTROL CONNECTIONS PER THESE PLANS AND SPECIFICATIONS AND THE MANUFACTURERS REQUIREMENTS.

(51) SBR AERATION BLOWER WITH INTEGRAL DISCONNECT. ELECTRICAL CONTRACTOR SHALL MAKE ALL POWER AND CONTROL CONNECTIONS PER THESE PLANS AND SPECIFICATIONS AND THE MANUFACTURERS REQUIREMENTS.

(52) DIGESTER AERATION BLOWER WITH INTEGRAL DISCONNECT. ELECTRICAL CONTRACTOR SHALL MAKE ALL POWER AND CONTROL CONNECTIONS PER THESE PLANS AND SPECIFICATIONS AND THE MANUFACTURERS REQUIREMENTS.

(53) PRESSURE TRANSDUCER. ELECTRICAL CONTRACTOR SHALL MAKE ALL POWER AND CONTROL CONNECTIONS PER THESE PLANS AND SPECIFICATIONS AND THE MANUFACTURERS REQUIREMENTS.

(54) TEMPERATURE TRANSDUCER. ELECTRICAL CONTRACTOR SHALL MAKE ALL POWER AND CONTROL CONNECTIONS PER THESE PLANS AND SPECIFICATIONS AND THE MANUFACTURERS REQUIREMENTS.

(60) 20A SLUDGE BAGGING SYSTEM CONTROL PANEL, BY VENDOR. ELECTRICAL CONTRACTOR SHALL MAKE ALL POWER AND CONTROL CONNECTIONS PER THESE PLANS AND SPECIFICATIONS AND THE MANUFACTURERS REQUIREMENTS.

(61) POTABLE WATER VALVE. ELECTRICAL CONTRACTOR SHALL MAKE ALL POWER AND CONTROL CONNECTIONS PER THESE PLANS AND SPECIFICATIONS AND THE MANUFACTURERS REQUIREMENTS.

(62) POLYMER METERING PUMP. ELECTRICAL CONTRACTOR SHALL MAKE ALL POWER AND CONTROL CONNECTIONS PER THESE PLANS AND SPECIFICATIONS AND THE MANUFACTURERS REQUIREMENTS.

(63) DRY POLYMER MIXER. ELECTRICAL CONTRACTOR SHALL MAKE ALL POWER AND CONTROL CONNECTIONS PER THESE PLANS AND SPECIFICATIONS AND THE MANUFACTURERS REQUIREMENTS.

(64) DEWATERING FEED PUMP. ELECTRICAL CONTRACTOR SHALL MAKE ALL POWER AND CONTROL CONNECTIONS PER THESE PLANS AND SPECIFICATIONS AND THE MANUFACTURERS REQUIREMENTS.

(70) 30A DRYING BED LIFT PUMP CONTROL PANEL, 480V, 3Ø, 4W. ELECTRICAL CONTRACTOR SHALL MAKE ALL POWER AND CONTROL CONNECTIONS PER THESE PLANS AND SPECIFICATIONS AND THE MANUFACTURERS REQUIREMENTS. SEE DETAIL 1 ON SHEET E4.4.

(71) DRYING BED LIFT PUMP. ELECTRICAL CONTRACTOR SHALL MAKE ALL POWER AND CONTROL CONNECTIONS PER THESE PLANS AND SPECIFICATIONS AND THE MANUFACTURERS REQUIREMENTS. SEE DETAIL 4 ON SHEET E4.5.

(72) LEVEL FLOAT. ELECTRICAL CONTRACTOR SHALL MAKE ALL POWER AND CONTROL CONNECTIONS PER THESE PLANS AND SPECIFICATIONS AND THE MANUFACTURERS REQUIREMENTS. SEE DETAIL 4 ON SHEET E4.5.

(80) OVERFLOW LIFT PUMP CONTROL PANEL, BY VENDOR. 240V, 1Ø, 3W. ELECTRICAL CONTRACTOR SHALL MAKE ALL POWER AND CONTROL CONNECTIONS PER THESE PLANS AND SPECIFICATIONS AND THE MANUFACTURERS REQUIREMENTS. SEE DETAIL 1 ON SHEET E4.4.

(81) OVERFLOW LIFT PUMP. ELECTRICAL CONTRACTOR SHALL MAKE ALL POWER AND CONTROL CONNECTIONS PER THESE PLANS AND SPECIFICATIONS AND THE MANUFACTURERS REQUIREMENTS. SEE DETAIL 4 ON SHEET E4.5.

(82) LEVEL FLOAT. ELECTRICAL CONTRACTOR SHALL MAKE ALL POWER AND CONTROL CONNECTIONS PER THESE PLANS AND SPECIFICATIONS AND THE MANUFACTURERS REQUIREMENTS. SEE DETAIL 4 ON SHEET E4.5.

(90) JOINT TRENCH WITH WATER LINES. MAINTAIN 24–INCH SEPARATION. SEE DETAIL 3 ON SHEET E4.3.

(91) STACKED #7 CONCRETE PULL BOX. INSTALL AS SHOWN OR AS NEEDED IF CONDUIT RUNS WILL EXCEED 360 DEGREE OF BENDS OR THE LENGTH EXCEEDS 400 FEET. INSTALL 1 FOR POWER AND 1 FOR CONTROL. SEE DETAIL 5 ON SHEET E4.3.

(92) STANCHION MOUNTED NEMA 4X SST JUNCTION BOXES. MAINTAIN 3' CLEARANCE IN FRONT OF EQUIPMENT. EXTRA SLACK SHALL REMAIN IN THE J–BOX FOR FUTURE LEVEL ADJUSTMENT. SEE DETAIL 2 ON SHEET E4.2 AND DETAIL 1 ON SHEET E4.4.

(93) TRAFFIC BOLLARD TO BE INSTALLED PER CIVIL PLANS. LOCATE OUT OF 4 FOOT WORKING SPACE ENVELOPE PER NEC.

(94) NON–FUSED DISCONNECT, NEMA 4X FOR OUTDOOR AND CLASS 1 DIV 1 WITHIN CLASSIFIED BOUNDARY. IF LOCATION IS ABOVE BOUNDARY, NEMA 4X WITH CLASSIFIED SEAL OFFS IS ACCEPTABLE. PROVIDE PERMANENT LABEL SUITABLE FOR CORROSIVE ENVIRONMENTS AND UV RESISTANT. MATCH LABEL NAMING CONVENTION WITH P&ID. SEE DETAIL 5 ON SHEET E4.2 & SEE DETAIL 1 ON SHEET E4.4.

(95) ROTARY TYPE DISCONNECT, NEMA 4X FOR OUTDOOR AND CLASS 1 DIV 1 WITHIN CLASSIFIED BOUNDARY. IF LOCATION IS ABOVE BOUNDARY, NEMA 4X WITH CLASSIFIED SEAL OFFS IS ACCEPTABLE. PROVIDE PERMANENT LABEL SUITABLE FOR CORROSIVE ENVIRONMENTS AND UV RESISTANT. MATCH LABEL NAMING CONVENTION WITH P&ID. SEE DETAIL 5 ON SHEET E4.2 & SEE DETAIL 1 ON SHEET E4.4.

(96) E–STOP, NEMA 4X FOR OUTDOOR AND CLASS 1 DIV 1 WITHIN CLASSIFIED BOUNDARY. IF LOCATION IS ABOVE BOUNDARY, NEMA 4X WITH CLASSIFIED SEAL OFFS IS ACCEPTABLE. PROVIDE PERMANENT LABEL SUITABLE FOR CORROSIVE ENVIRONMENTS AND UV RESISTANT. MATCH LABEL NAMING CONVENTION WITH P&ID. SEE DETAIL 5 ON SHEET E4.2.

(97) 20A 120V GFCI DUPLEX RECEPTACLE WITH METAL WEATHERPROOF WHILE–IN–USE AND LOCKABLE COVER INSTALLED PER DETAIL 1 ON SHEET E4.2.

(98) 20A 120V GFCI DUPLEX RECEPTACLE WITH METAL WEATHERPROOF WHILE–IN–USE AND LOCKABLE COVER INSTALLED ONTO LIGHT POLE. SEE DETAIL 2 ON SHEET E4.5.

(99) CLASSIFIED AREA VERIFY BOUNDARY WITH THE NFPA. INSTALL ANY PANELS, DISCONNECTS, SPLICES, ARC MAKING EQUIPMENT OUT OF THE BOUNDARY, WHERE NOT POSSIBLE THEN INSTALL CLASS 1 DIV 1 LISTED EQUIPMENT. ALL CONDUIT WITHIN BOUNDARY SHALL BE CLASS 1 DIV 1 OR 2 RATED AS REQUIRED BY THE BOUNDARY. USE PVC COATED THREADED RMC CONDUIT, INSTALL STAINLESS STEEL 316 ENCLOSURES, HARDWARE AND EQUIPMENT WITHIN 10 FEET OF THE BOUNDARY. INSTALL CLASSIFIED SEAL OFFS WITHIN 10 FEET OF THE BOUNDARY, AT A PANEL OR JUNCTION BOX IS PREFERRED.

WRIGHT engineering corporation
ELECTRICAL ENGINEERING AND DESIGN
165 EAST CHILTON DRIVE
CHANDLER, ARIZONA 85225
PHONE: 480.497.5829
FAX: 480.497.5807
www.wrightengineering.us
Wright Project # 23319

CALL TWO WORKING DAYS BEFORE YOU DIG
602-263-1100
1-800-STAKE-IT
(OUTSIDE MARICOPA COUNTY)

ISSUED FOR BID

NO	BY	DATE	REVISIONS	DATE	APP.

Registered Professional Engineer (Electrical) Certificate No. 73954 JACOB BIELEFELDT Date Signed 11-24-2025 Expires 9-30-27

THESE DRAWINGS ARE THE PROPERTY OF P.A.C.E. AND SHALL NOT BE REPRODUCED IN ANY MANNER NOR BE USED FOR CONSTRUCTION UNLESS STAMPED "ISSUED FOR CONSTRUCTION".

PREPARED BY: WRIGHT ENGINEERING
DESIGNED BY: JHB
DRAWN BY: XAG
CHECKED BY: JHB
SCALE: AS NOTED
DATE: NOV 2025
JOB NO.: B614

TITLE: ELECTRICAL NOTES + LEGEND

JOB: TOWN OF JEROME WASTEWATER TREATMENT PLANT
YAVAPAI CO. AZ

PREPARED BY: PACE Advanced Water Engineering
8723 E. VIA de COMMERICO, SUITE A-204 | SCOTTSDALE, CA 85258
P: (408) 991-3595 | www.pacewater.com

SHEET E1.2
72 OF 99 SHEETS
JOB NO. B614

H:\2023\23319-Jerome WWTP\23319-E.dwg - Tab: E1.2 - by jacobb on 11/24/25 at 6:56:46 PM

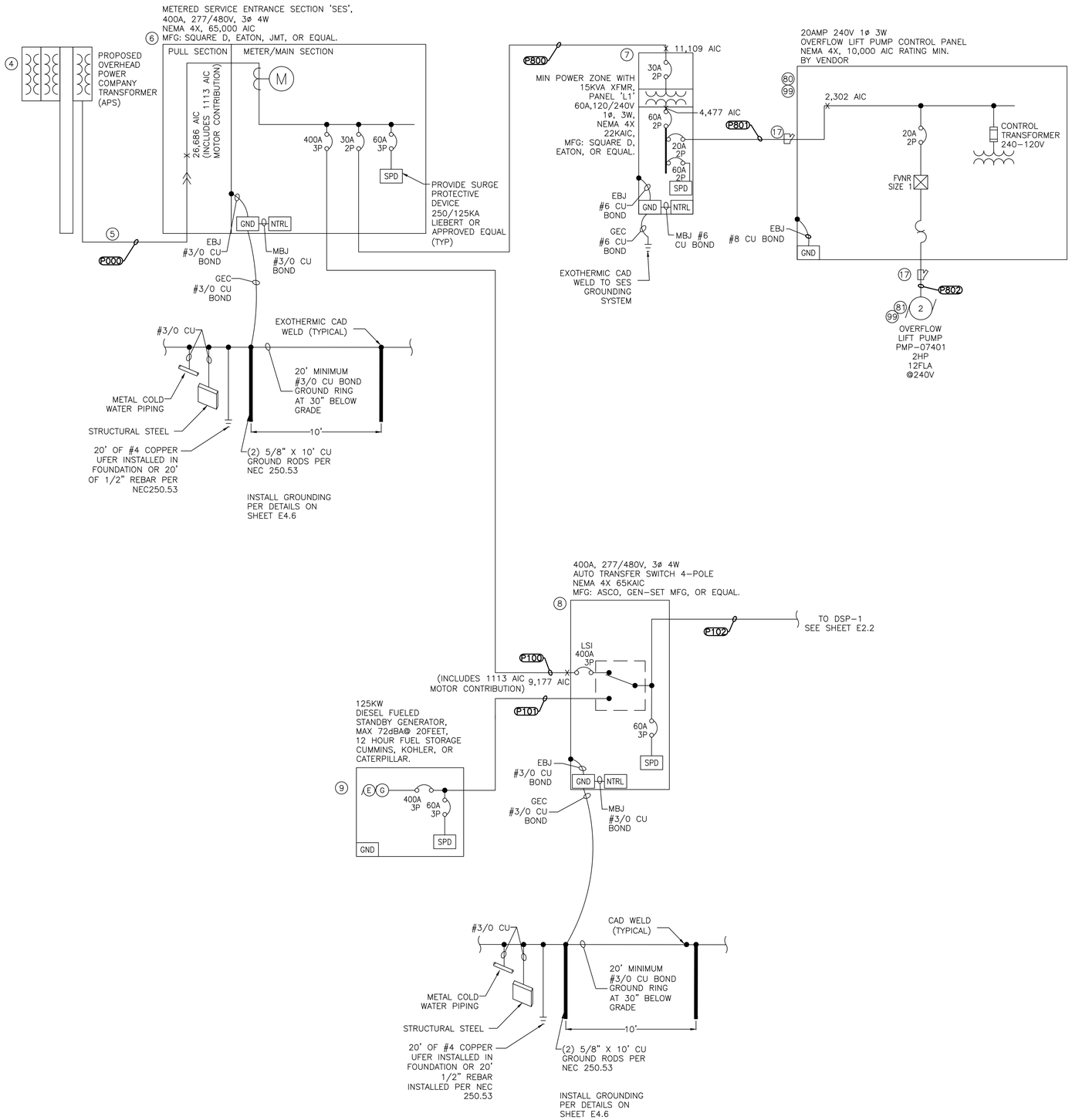

CONSTRUCTION NOTES

4. COORDINATE WITH APS TO REPLACE THE EXISTING POLE MOUNTED SINGLE PHASE TRANSFORMER. APS TO INSTALL THREE PHASE TRANSFORMERS. CONTRACTOR SHALL VERIFY LOCATION OF NEW TRANSFORMER WITH APS. APS PLANS WILL DETERMINE EXACT LOCATION AND TAKE PRECEDENCE OVER THESE DRAWINGS. COORDINATE ALL WORK WITH APS.
5. APS SERVICE LINE. TRENCH AND INSTALL CONDUIT PER APS SPECIFICATIONS. POWER COMPANY PLANS WILL DETERMINE EXACT LOCATION OF CONDUIT AND TAKE PRECEDENCE OVER THESE DRAWINGS.
6. SES, 400 AMP, 277/480V, 3ø, 4W, SEE DETAIL 1 ON E4.1.
7. MINI-POWER ZONE AND PANELBOARD. SEE DETAIL 1 ON E4.1.
8. ATS 400A 277/480V, 3ø, 4W, SEE DETAIL 2 ON SHEET E4.1.
9. GENERATOR 125KW, 277/480V, 3ø, 4W, SEE DETAIL 1 ON E4.3.
17. CLASSIFIED SEAL OFF LISTED FOR CLASS 1 DIV 1. LOCATE WITHIN 10 FEET OF CLASSIFIED AREA BOUNDARY. PVC COATED RMS EYS TYPE OR EQUIVALENT. SEAL SHALL HAVE SEALING COMPOUND CHICO, OR EQUAL.
80. OVERFLOW LIFT PUMP CONTROL PANEL, BY VENDOR. 240V, 1ø, 3W. ELECTRICAL CONTRACTOR SHALL MAKE ALL POWER AND CONTROL CONNECTIONS PER THESE PLANS AND SPECIFICATIONS AND THE MANUFACTURERS REQUIREMENTS. SEE DETAIL 1 ON SHEET E4.4.
81. OVERFLOW LIFT PUMP. ELECTRICAL CONTRACTOR SHALL MAKE ALL POWER AND CONTROL CONNECTIONS PER THESE PLANS AND SPECIFICATIONS AND THE MANUFACTURERS REQUIREMENTS. SEE DETAIL 4 ON SHEET E4.5.
99. CLASSIFIED AREA VERIFY BOUNDARY WITH THE NFPA. INSTALL ANY PANELS, DISCONNECTS, SPLICES, ARC MAKING EQUIPMENT OUT OF THE BOUNDARY, WHERE NOT POSSIBLE THEN INSTALL CLASS 1 DIV 1 LISTED EQUIPMENT. ALL CONDUIT WITHIN BOUNDARY SHALL BE CLASS 1 DIV 1 OR 2 RATED AS REQUIRED BY THE BOUNDARY. USE PVC COATED THREADED RMC CONDUIT. INSTALL STAINLESS STEEL 316 ENCLOSURES, HARDWARE AND EQUIPMENT WITHIN 10 FEET OF THE BOUNDARY. INSTALL CLASSIFIED SEAL OFFS WITHIN 10 FEET OF THE BOUNDARY, AT A PANEL OR JUNCTION BOX IS PREFERRED.

1A SINGLE LINE DIAGRAM
NO SCALE

277/480V 3ø 4W

WRIGHT engineering corporation
ELECTRICAL ENGINEERING AND DESIGN
165 EAST CHILTON DRIVE
CHANDLER, ARIZONA 85225
PHONE: 480.497.5829
FAX: 480.497.5807
www.wrightengineering.us
Wright Project # 23319

CALL TWO WORKING DAYS BEFORE YOU DIG
602-263-1100
1-800-STAKE-IT
(OUTSIDE MARICOPA COUNTY)

NO	BY	DATE	REVISIONS	DATE	APP.

Registered Professional Engineer (Electrical) Certificate No. 73954 JASON BELLEDIT 3-31-27 Expires 3-31-27

PREPARED BY: WRIGHT ENGINEERING
DESIGNED BY: JHB
DRAWN BY: XAG
CHECKED BY: JHB
SCALE: AS NOTED
DATE: NOV 2025
JOB NO.: B614

TITLE: ELECTRICAL SINGLE LINE DIAGRAM I

JOB: TOWN OF JEROME WASTEWATER TREATMENT PLANT
YAVAPAI CO. AZ

PREPARED BY:

PACE
Advanced Water Engineering
8723 E. Via de Commercio, Suite 104, Scottsdale, CA 85258
p. (408) 991-3595 | www.pacewater.com

SHEET
E2.1
73 OF 99 SHEETS

JOB NO. B614

ISSUED FOR BID

THESE DRAWINGS ARE THE PROPERTY OF P.A.C.E. AND SHALL NOT BE REPRODUCED IN ANY MANNER NOR BE USED FOR CONSTRUCTION UNLESS STAMPED "ISSUED FOR CONSTRUCTION".

H:\2025\2513-Jerome WW TP\2513-E Dwgs - Feb 03 - 1\y-yvada.ctb 11/4/25 4:58:48 PM

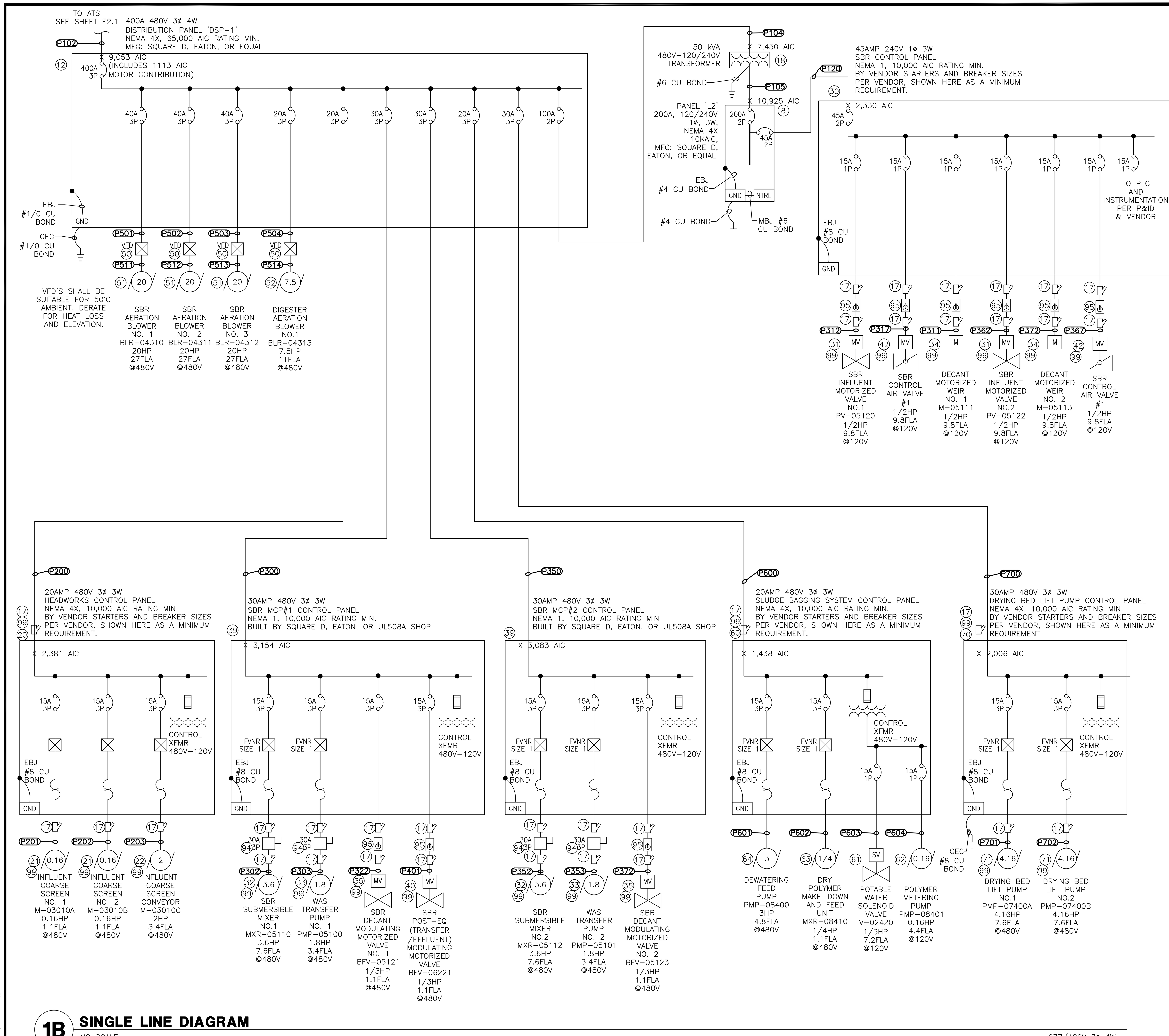

1B SINGLE LINE DIAGRAM

NO SCALE

CONSTRUCTION NOTES

(12) DISTRIBUTION PANEL DSP-1 400A 277/480V, 3ø, 4W, SEE DETAIL 2 ON SHEET E4.1.

(17) CLASSIFIED SEAL OFF LISTED FOR CLASS 1 DIV 1. LOCATE WITHIN 10 FEET OF CLASSIFIED AREA BOUNDARY. PVC COATED RMS EYS TYPE OR EQUIVALENT. SEAL SHALL HAVE SEALING COMPOUND CHICO, OR EQUAL.

(20) 20A HEADWORKS CONTROL PANEL, BY VENDOR CLASS 1 DIVISION 2 LISTED. ELECTRICAL CONTRACTOR SHALL MAKE ALL POWER AND CONTROL CONNECTIONS PER THESE PLANS AND SPECIFICATIONS AND THE MANUFACTURERS REQUIREMENTS. SEE DETAIL 1 ON SHEET E4.4.

(21) INFLUENT COARSE SCREEN MOTOR. ELECTRICAL CONTRACTOR SHALL MAKE ALL POWER AND CONTROL CONNECTIONS PER THESE PLANS AND SPECIFICATIONS AND THE MANUFACTURERS REQUIREMENTS.

(22) INFLUENT CONVEYOR MOTOR. ELECTRICAL CONTRACTOR SHALL MAKE ALL POWER AND CONTROL CONNECTIONS PER THESE PLANS AND SPECIFICATIONS AND THE MANUFACTURERS REQUIREMENTS.

(30) SBR PANEL BY VENDOR, ELECTRICAL CONTRACTOR SHALL MAKE ALL POWER AND CONTROL CONNECTIONS PER THESE PLANS AND SPECIFICATIONS AND THE MANUFACTURERS REQUIREMENTS.

(31) SBR INFLUENT VALVE. ELECTRICAL CONTRACTOR SHALL MAKE ALL POWER AND CONTROL CONNECTIONS PER THESE PLANS AND SPECIFICATIONS AND THE MANUFACTURERS REQUIREMENTS.

(32) SBR SUBMERSIBLE MIXER. ELECTRICAL CONTRACTOR SHALL MAKE ALL POWER AND CONTROL CONNECTIONS PER THESE PLANS AND SPECIFICATIONS AND THE MANUFACTURERS REQUIREMENTS.

(33) WAS TRANSFER PUMP. ELECTRICAL CONTRACTOR SHALL MAKE ALL POWER AND CONTROL CONNECTIONS PER THESE PLANS AND SPECIFICATIONS AND THE MANUFACTURERS REQUIREMENTS.

(34) DECANT MOTOR. ELECTRICAL CONTRACTOR SHALL MAKE ALL POWER AND CONTROL CONNECTIONS PER THESE PLANS AND SPECIFICATIONS AND THE MANUFACTURERS REQUIREMENTS.

(35) SBR DECANT VALVE. ELECTRICAL CONTRACTOR SHALL MAKE ALL POWER AND CONTROL CONNECTIONS PER THESE PLANS AND SPECIFICATIONS AND THE MANUFACTURERS REQUIREMENTS.

(39) SBR MOTOR CONTROL PANEL, PROVIDE AND INSTALL. ELECTRICAL CONTRACTOR SHALL MAKE ALL POWER AND CONTROL CONNECTIONS PER THESE PLANS AND SPECIFICATIONS AND THE MANUFACTURERS REQUIREMENTS.

(40) SBR EFFLUENT VALVE. ELECTRICAL CONTRACTOR SHALL MAKE ALL POWER AND CONTROL CONNECTIONS PER THESE PLANS AND SPECIFICATIONS AND THE MANUFACTURERS REQUIREMENTS.

(42) SBR AIR VALVE. ELECTRICAL CONTRACTOR SHALL MAKE ALL POWER AND CONTROL CONNECTIONS PER THESE PLANS AND SPECIFICATIONS AND THE MANUFACTURERS REQUIREMENTS.

(50) VARIABLE FREQUENCY DRIVE. ELECTRICAL CONTRACTOR SHALL MAKE ALL POWER AND CONTROL CONNECTIONS PER THESE PLANS AND SPECIFICATIONS AND THE MANUFACTURERS REQUIREMENTS.

(51) SBR AERATION BLOWER WITH INTEGRAL DISCONNECT. ELECTRICAL CONTRACTOR SHALL MAKE ALL POWER AND CONTROL CONNECTIONS PER THESE PLANS AND SPECIFICATIONS AND THE MANUFACTURERS REQUIREMENTS.

(52) DIGESTER AERATION BLOWER WITH INTEGRAL DISCONNECT. ELECTRICAL CONTRACTOR SHALL MAKE ALL POWER AND CONTROL CONNECTIONS PER THESE PLANS AND SPECIFICATIONS AND THE MANUFACTURERS REQUIREMENTS.

(60) 20A SLUDGE BAGGING SYSTEM CONTROL PANEL, BY VENDOR. ELECTRICAL CONTRACTOR SHALL MAKE ALL POWER AND CONTROL CONNECTIONS PER THESE PLANS AND SPECIFICATIONS AND THE MANUFACTURERS REQUIREMENTS.

(61) POTABLE WATER VALVE. ELECTRICAL CONTRACTOR SHALL MAKE ALL POWER AND CONTROL CONNECTIONS PER THESE PLANS AND SPECIFICATIONS AND THE MANUFACTURERS REQUIREMENTS.

(62) POLYMER METERING PUMP. ELECTRICAL CONTRACTOR SHALL MAKE ALL POWER AND CONTROL CONNECTIONS PER THESE PLANS AND SPECIFICATIONS AND THE MANUFACTURERS REQUIREMENTS.

(63) DRY POLYMER MIXER. ELECTRICAL CONTRACTOR SHALL MAKE ALL POWER AND CONTROL CONNECTIONS PER THESE PLANS AND SPECIFICATIONS AND THE MANUFACTURERS REQUIREMENTS.

(64) DEWATERING FEED PUMP. ELECTRICAL CONTRACTOR SHALL MAKE ALL POWER AND CONTROL CONNECTIONS PER THESE PLANS AND SPECIFICATIONS AND THE MANUFACTURERS REQUIREMENTS.

(70) 30A DRYING BED LIFT PUMP CONTROL PANEL, 480V, 3ø, 4W. ELECTRICAL CONTRACTOR SHALL MAKE ALL POWER AND CONTROL CONNECTIONS PER THESE PLANS AND SPECIFICATIONS AND THE MANUFACTURERS REQUIREMENTS. SEE DETAIL 1 ON SHEET E4.4.

(71) DRYING BED LIFT PUMP. ELECTRICAL CONTRACTOR SHALL MAKE ALL POWER AND CONTROL CONNECTIONS PER THESE PLANS AND SPECIFICATIONS AND THE MANUFACTURERS REQUIREMENTS. SEE DETAIL 4 ON SHEET E4.5.

(94) NON-FUSED DISCONNECT, NEMA 4X FOR OUTDOOR AND CLASS 1 DIV 1 WITHIN CLASSIFIED BOUNDARY. IF LOCATION IS ABOVE BOUNDARY, NEMA 4X WITH CLASSIFIED SEAL OFFS IS ACCEPTABLE. PROVIDE PERMANENT LABEL SUITABLE FOR CORROSIVE ENVIRONMENTS AND UV RESISTANT. MATCH LABEL NAMING CONVENTION WITH P&ID. SEE DETAIL 5 ON SHEET E4.2 & SEE DETAIL 1 ON SHEET E4.4.

(95) ROTARY TYPE DISCONNECT, NEMA 4X FOR OUTDOOR AND CLASS 1 DIV 1 WITHIN CLASSIFIED BOUNDARY. IF LOCATION IS ABOVE BOUNDARY, NEMA 4X WITH CLASSIFIED SEAL OFFS IS ACCEPTABLE. PROVIDE PERMANENT LABEL SUITABLE FOR CORROSIVE ENVIRONMENTS AND UV RESISTANT. MATCH LABEL NAMING CONVENTION WITH P&ID. SEE DETAIL 5 ON SHEET E4.2 & SEE DETAIL 1 ON SHEET E4.4.

(99) CLASSIFIED AREA VERIFY BOUNDARY WITH THE NFPA. INSTALL ANY PANELS, DISCONNECTS, SPLICES, ARC MAKING EQUIPMENT OUT OF THE BOUNDARY, WHERE NOT POSSIBLE THEN INSTALL CLASS 1 DIV 1 LISTED EQUIPMENT. ALL CONDUIT WITHIN BOUNDARY SHALL BE CLASS 1 DIV 1 OR 2 RATED AS REQUIRED BY THE BOUNDARY. USE PVC COATED THREADED RMC CONDUIT, INSTALL STAINLESS STEEL 316 ENCLOSURES, HARDWARE AND EQUIPMENT WITHIN 10 FEET OF THE BOUNDARY. INSTALL CLASSIFIED SEAL OFFS WITHIN 10 FEET OF THE BOUNDARY, AT A PANEL OR JUNCTION BOX IS PREFERRED.

ISSUED FOR BID

WRIGHT engineering corporation
ELECTRICAL ENGINEERING AND DESIGN
165 EAST CHILTON DRIVE
CHANDLER, ARIZONA 85225
PHONE: 480.497.5829
FAX: 480.497.5807
www.wrightengineering.us
Wright Project # 23319

CALL TWO WORKING DAYS BEFORE YOU DIG
602-263-1100
1-800-STAKE-IT
(OUTSIDE MARICOPA COUNTY)

NO	BY	DATE	REVISIONS	DATE	APP.

Registered Professional Engineer (Electrical) Certificate No. 73954 JACOB BIELEFELDT Date Signed 11-24-2025 Expires 9-30-27

PREPARED BY: WRIGHT ENGINEERING
DESIGNED BY: JHB
DRAWN BY: XAG
CHECKED BY: JHB SCALE: AS NOTED
DATE NOV 2025
JOB NO. B614

TITLE: ELECTRICAL SINGLE LINE DIAGRAM II

JOB: TOWN OF JEROME WASTEWATER TREATMENT PLANT
YAVAPAI CO. AZ

PREPARED BY: PACE Advanced Water Engineering
8723 E. VIA de COMMERICO, SUITE A-204 | SCOTTSDALE, CA 85258
P: (408) 991-3595 | www.pacewater.com

THESE DRAWINGS ARE THE PROPERTY OF P.A.C.E. AND SHALL NOT BE REPRODUCED IN ANY MANNER NOR BE USED FOR CONSTRUCTION UNLESS STAMPED "ISSUED FOR CONSTRUCTION".

H:\2023\23319-Jerome WWTP\23319-E.dwg - Tab: E2.2 - by jacobb on 11/24/25 at 6:56:46 PM

SES LOAD CALCULATION SUMMARY

LOAD DESCRIPTION	LOAD	STANDBY
MCC–A	256.6	256.6
PANEL L1	5.0	0
TOTAL AMPS AT 480V 3ø	261.6	256.6
TOTAL KVA AT 480V 3ø	217.5	217.5

MCC LOAD CALCULATION SUMMARY

LOAD DESCRIPTION	LOAD	STANDBY
SBR AERATION BLOWER NO. 1 BLR–04310 (20HP)	27.0	27.0
SBR AERATION BLOWER NO. 2 BLR–04311 (20HP)	27.0	27.0
SBR AERATION BLOWER NO. 3 BLR–04312 (20HP)	27.0	27.0
DIGESTION AERATION BLOWER NO. 1 BLR–04313 (7.5HP)	11.0	11.0
SBR SUBMERSIBLE MIXER NO. 1 MXR–05110 (3.6HP)	7.6	7.6
SBR SUBMERSIBLE MIXER NO. 2 MXR–05112 (3.6HP)	7.6	7.6
WAS TRANSFER PUMP NO. 1 PMP–05100 (1.8HP)	3.4	3.4
WAS TRANSFER PUMP NO. 2 PMP–05101 (1.8HP)	3.4	3.4
SBR DECANT MODULATING VALVE NO. 1 BFV–05121 (1/3HP)	1.1	1.1
SBR DECANT VALVE NO. 2 BFV–05123 (1/3HP)	1.1	1.1
SBR POST–EQ VALVE BFV–05121 (1/3HP)	1.1	1.1
DRYING BED LIFT PUMP CONTROL PANEL	19.1	19.1
HEADWORKS CONTROL PANEL	5.6	5.6
SLUDGE BAGGING SYSTEM CONTROL PANEL	12.1	12.1
PANEL 'L2'	95.7	95.7
25% OF THE LARGEST MOTOR	**6.8**	**6.8**
TOTAL AMPS / 480V 3ø	256.6	256.6
TOTAL KVA AT / ø	213.3	213.3

DRYING BED LIFT PUMP CONTROL PANEL LOAD CALCULATION SUMMARY

LOAD DESCRIPTION	LOAD	STANDBY
DRYING BED LIFT PUMP NO. 1 PMP–07400A (4.16HP)	7.6	7.6
DRYING BED LIFT PUMP NO. 2 PMP–07400B (4.16HP)	7.6	7.6
CONTROL	2.0	2.0
25% OF THE LARGEST MOTOR	1.9	1.9
TOTAL AMPS / 480V 3ø	19.1	19.1
TOTAL KVA AT / ø	15.9	15.9

HEADWORKS CONTROL PANEL LOAD CALCULATION SUMMARY

LOAD DESCRIPTION	LOAD	STANDBY
INFLUENT COARSE SCREEN NO. 1 M–03010A (.16HP)	1.1	1.1
INFLUENT COARSE SCREEN NO. 2 M–03010B (.16HP)	1.1	1.1
INFLUENT COARSE SCREEN CONVERYOR M–03010C (1/2HP)	1.1	1.1
CONTROL	2.0	2.0
25% OF THE LARGEST MOTOR	**0.3**	**0.3**
TOTAL AMPS / 480V 3ø	5.6	5.6
TOTAL KVA AT / ø	4.6	4.6

SLUDGE BAGGING SYSTEM CONTROL PANEL LOAD CALCULATION SUMMARY

LOAD DESCRIPTION	LOAD	STANDBY
DEWATERING FEED PUMP PMP–08400 (3HP)	4.8	4.8
DRY POLYMER MAKE–DOWN AND FEED UNIT MXR–08410 (1/4HP)	1.1	1.1
CONTROL	5.0	5.0
25% OF THE LARGEST MOTOR	**1.2**	**1.2**
TOTAL AMPS / 480V 3ø	12.1	12.1
TOTAL KVA AT / ø	10.1	10.1

SBR CONTROL PANEL LOAD CALCULATION SUMMARY

LOAD DESCRIPTION	LOAD Aø	LOAD Bø	STANDBY
SBR INFLUENT VALVE NO. 1 PV–05120 (1/2HP)	9.8		9.8
SBR INFLUENT VALVE NO. 2 PV–05122 (1/2HP)		9.8	9.8
DECANT MOTOR NO. 1 M–05111 (1/2HP)	9.8		9.8
DECANT MOTOR NO. 2 M–05113 (1/2HP)		9.8	9.8
SBR AIR VALVE #1 (1/2 HP)	9.8		9.8
SBR AIR VALVE #2 (1/2 HP)		9.8	9.8
CONTROL	2.0		2.0
25% OF THE LARGEST MOTOR	**2.5**		**2.5**
TOTAL AMPS / 120V 1ø	33.9	29.4	33.9
TOTAL KVA AT / ø	4.1	3.5	4.1

PANEL NAME: L1			120/240V, 1ø, 3W				60A MAIN BKR		
LOCATION: SEE SITE PLAN			TYPE: PLUG–IN				PEDESTAL MTD., NEMA 4X		
CKT NO.	BKR SIZE	DESCRIPTION	LOAD	Aø	Bø	LOAD	DESCRIPTION	BKR SIZE	CKT NO.
1	20/	OVERFLOW LIFT PUMP MOTOR CONTROL PANEL	1200	1200		0	SPARE	20/1	2
3	/2		1200		1200	0	SPARE	20/1	4
5	20/1	SPARE	0	0		0	SPARE	20/1	6
CODE TOTAL VA/ø				1200	1200	*INDICATES LOAD @ 125%			
CODE TOTAL AMPS/ø				10.0	10.0	22,000 AIC BREAKERS			

PANEL NAME: L2			120/240V, 1ø, 3W				200A MAIN BKR		
LOCATION: BUILDING			TYPE: PLUG–IN				WALL MTD., NEMA 4X		
CKT NO.	BKR SIZE	DESCRIPTION	LOAD	Aø	Bø	LOAD	DESCRIPTION	BKR SIZE	CKT NO.
1	20/1	*BUILDING EXTERIOR LIGHTS	235	435		200	FLOW METER	20/1	2
3	20/1	*LAB LIGHTS + BLOWER ROOM + EM LIGHT	963		5031	4068	SBR CONTROL PANEL	45/	4
5	20/1	BLOWER ROOM + EXTERIOR RECEPTACLE	900	4428		3528		/2	6
7	20/1	*RESTROOM LIGHTS + EXHAUST FAN + RECEPTACLE	420		1620	1200	GENERATOR ON BOARD PANEL	60/	8
9	20/1	LAB RECEPTACLES 3	1080	2280		1200		/2	10
11	20/1	LAB RECEPTACLES 4	1440		7940	6500	LAB TANKLESS WATER HEATER	60/	12
13	20/	*SBR AREA LIGHTING*	302	6802		6500		/2	14
15	/2		302		6802	6500	RR TANKLESS WATER HEATER	60/	16
17	20/	A/C UNIT OUTDOOR	1759	8259		6500		/2	18
19	/2		1759		1759	0	BUSSED SPACE		20
21	20/1	A/C UNIT INDOOR	600	600		0	BUSSED SPACE		22
23		BUSSED SPACE	0		0	0	BUSSED SPACE		24
25		BUSSED SPACE	0	0		0	BUSSED SPACE		26
27		BUSSED SPACE	0		0	0	BUSSED SPACE		28
29		BUSSED SPACE	0	0		0	BUSSED SPACE		30
31		BUSSED SPACE	0		0	0	BUSSED SPACE		32
33		BUSSED SPACE	0	0		0	BUSSED SPACE		34
35		BUSSED SPACE	0		0	0	BUSSED SPACE		36
37		BUSSED SPACE	0	0		0	BUSSED SPACE		38
39		BUSSED SPACE	0		0	0	BUSSED SPACE		40
41		BUSSED SPACE	0	0		0	BUSSED SPACE		42
CODE TOTAL VA/ø				22804	23152	*INDICATES LOAD @ 125%			
CODE TOTAL AMPS/ø				190.0	192.9	22,000 AIC BREAKERS			

WRIGHT engineering corporation
ELECTRICAL ENGINEERING AND DESIGN
165 EAST CHILTON DRIVE
CHANDLER, ARIZONA 85225
PHONE: 480.497.5829
FAX: 480.497.5807
www.wrightengineering.us

Wright Project # 23319

CALL TWO WORKING DAYS BEFORE YOU DIG
602-263-1100
1-800-STAKE-IT
(OUTSIDE MARICOPA COUNTY)

NO	BY	DATE	REVISIONS	DATE	APP.

Registered Professional Engineer (Electrical) Certificate No. 73954 JAMES BILLEDT 3-31-27 Expires 9-30-27

PREPARED BY: WRIGHT ENGINEERING
DESIGNED BY: JHB
DRAWN BY: XAG
CHECKED BY: JHB
SCALE: AS NOTED
DATE: NOV 2025
JOB NO. B614

THESE DRAWINGS ARE THE PROPERTY OF P.A.C.E. AND SHALL NOT BE REPRODUCED IN ANY MANNER NOR BE USED FOR CONSTRUCTION UNLESS STAMPED "ISSUED FOR CONSTRUCTION".

TITLE
ELECTRICAL
LOAD CALCULATIONS

JOB
TOWN OF JEROME
WASTEWATER
TREATMENT PLANT
YAVAPAI CO. AZ

ISSUED FOR BID

PREPARED BY:

PACE
Advanced Water Engineering
8723 E. VIA de COMMERCIO, 1ST FLR. SCOTTSDALE, CA 85258
P: (480) 991-3595 | www.pacewater.com

SHEET
E2.3
75 OF 99 SHEETS

JOB NO. B614

N:\2025\2025-Pace\Jerome WWTP\2025 Elec Eng\ - Title E2.3 - by pseals on 11/05/25 at 9:46 PM

CONDUIT AND WIRE SCHEDULE FOR POWER

CONDUIT NO.	CONDUIT SIZE	WIRE POWER	WIRE GROUND	FROM	TO	REMARKS
POWER COMPANY						
P000	PER POWER COMPANY (APS) PLANS AND SPECIFICATIONS			POWER COMPANY TRANSFORMER	SES	
MAIN POWER						
P100	(2) 3.5"	4-#350KCMIL (2) PARALLEL	1-#3/0 (2) PARALLEL	SES	AUTOMATIC TRANSFER SWITCH	(2) PARALLEL CONDUCTORS TOTAL DISTANCE 1085'
P101	(2)3"	4-#3/0 (2) PARALLEL	1-#2 (2) PARALLEL	GENERATOR	AUTOMATIC TRANSFER SWITCH	(2) PARALLEL CONDUCTORS
P102	(2)3"	4-#3/0 (2) PARALLEL	1-#2 (2) PARALLEL	AUTOMATIC TRANSFER SWITCH	DSP-1	(2) PARALLEL CONDUCTORS
P103	1"	3-#10	1-#10	PANEL 'L2'	GENERATOR'S ON-BOARD PANEL	
P104	1.5"	2-#2	1-#8	DISTRIBUTION PANEL DSP-1	50KVA TRANSFORMER T2	
P105	2"	3-#3/0	1-#6	50KVA TRANSFORMER T2	PANEL 'L2'	
P120	1"	3-#6	1-#10	PANEL 'L2'	SBR PANEL	
P121	1"	2-#12	1-#12	PANEL 'L2'	AREA LIGHT	CKT. L2-7
P122	1"	2-#12	1-#12	PANEL 'L2'	BUILDING MISC.	SEE SITE FOR CKT.
P123	1"	2-#12	1-#12	PANEL 'L2'	SITE RECEPTACLE	CKT. L2-9
P131	1"	PULL ROPE		SEE SITE PLAN		SPARE
P132	2"	PULL ROPE		SEE SITE PLAN		SPARE
P133	3.5"	PULL ROPE		SEE SITE PLAN		SPARE
HEADWORKS STATION						
P200	1"	3-#10	1-#10	DISTRIBUTION PANEL DSP-1	HEADWORKS CONTROL PANEL	
P201	1"	3-#12	1-#12	HEADWORKS STATION CONTROL PANEL	INFLUENT COARSE SCREEN	M-03010A
P202	1"	3-#12	1-#12	HEADWORKS STATION CONTROL PANEL	INFLUENT COARSE SCREEN	M-03010B
P203	1"	3-#12	1-#12	HEADWORKS STATION CONTROL PANEL	INFLUENT COARSE SCREEN CONVEYOR	M-03010C
P204	1"	2-#12	1-#12	HEADWORKS STATION CONTROL PANEL	SOLENOID VALVE	V-02020

CONDUIT AND WIRE SCHEDULE FOR POWER

CONDUIT NO.	CONDUIT SIZE	WIRE POWER	WIRE GROUND	FROM	TO	REMARKS
SEQUENCING BATCH REACTOR						
P300	1"	3-#10	1-#10	DISTRIBUTION PANEL DSP-1	MCP#1	
P301A	1"	3-#12	1-#12	MCP#1	J-BOX P1	MXR-05110
		3-#12	1-#12			PMP-05100
		3-#12	1-#12			BFV-05121
P301B	1"	2-#12	1-#12	SBR CONTROL PANEL		M-05111
		2-#12	1-#12			PV-05120
		2-#12	1-#12			SBR AIR VALVE #1
P302	1"	3-#12	1-#12	J-BOX P1	SBR MIXER #1	MXR-05110
P303	1"	3-#12	1-#12		WAS TRANSFER PUMP #1	PMP-05100
P322	1"	3-#12	1-#12		DECANTER VALVE #1	BFV-05121
P311	1"	2-#12	1-#12		DECANTER #1	M-05111
P312	1"	2-#12	1-#12		SBR INFLUENT VALVE #1	PV-05120
P317	1"	2-#12	1-#12		SBR AIR VALVE #1	
P350	1"	3-#12	1-#12	DISTRIBUTION PANEL DSP-1	MCP#2	
P351A	1"	3-#12	1-#12	MCP#2	J-BOX P2	MXR-05112
		3-#12	1-#12			PMP-05101
		3-#12	1-#12			BFV-05123
P351B	1"	2-#12	1-#12	SBR CONTROL PANEL		M-05113
		2-#12	1-#12			PV-05122
		2-#12	1-#12			SBR AIR VALVE #2
P352	1"	3-#12	1-#12	J-BOX P2	SBR MIXER #2	MXR-05112
P353	1"	3-#12	1-#12		WAS TRANSFER PUMP #2	PMP-05101
P372	1"	3-#12	1-#12		DECANTER VALVE #2	BFV-05123
P361	1"	2-#12	1-#12		DECANTER #2	M-05113
P362	1"	2-#12	1-#12		SBR INFLUENT VALVE #2	PV-05122
P367	1"	2-#12	1-#12		SBR AIR VALVE #2	

CONDUIT AND WIRE SCHEDULE FOR POWER

CONDUIT NO.	CONDUIT SIZE	WIRE POWER	WIRE GROUND	FROM	TO	REMARKS
CHLORINE CONTACT AND DIGESTER						
P400	3"	2-#12	1-#12	PANEL 'L2'	FLOW METER	FM-06240
P401	3"	2-#12	1-#12	DISTRIBUTION PANEL DSP-1	BUTTERFLY VALVE	BFV-06221
BLOWER ROOM						
P501	1"	3-#8	1-#8	DISTRIBUTION PANEL DSP-1	AERATION BLOWER VFD #1	BLR-04310
P511	1"	3-#8	1-#8	AERATION BLOWER VFD #1	BLR-04310	
P502	1"	3-#8	1-#8	DISTRIBUTION PANEL DSP-1	AERATION BLOWER VFD #2	BLR-04311
P512	1"	3-#8	1-#8	AERATION BLOWER VFD #2	BLR-04311	
P503	1"	3-#8	1-#8	DISTRIBUTION PANEL DSP-1	AERATION BLOWER VFD #3	BLR-04312
P513	1"	3-#8	1-#8	AERATION BLOWER VFD #3	BLR-04312	
P504	1"	3-#12	1-#12	DISTRIBUTION PANEL DSP-1	DIGESTION BLOWER VFD #4	BLR-04313
P514	1"	3-#12	1-#12	DIGESTION BLOWER VFD #4	BLR-04313	
DEWATERING						
P600	1"	3-#10	1-#10	DISTRIBUTION PANEL DSP-1	SLUDGE BAGGING SYSTEM CONTROL PANEL	
P601	1"	3-#12	1-#12	SLUDGE BAGGING SYSTEM CONTROL PANEL	DEWATERING FEED PUMP	PMP-08400
P602	1"	3-#12	1-#12	SLUDGE BAGGING SYSTEM CONTROL PANEL	DRY POLYMER MIXING UNIT	MXR-08410
P603	1"	2-#12	1-#12	SLUDGE BAGGING SYSTEM CONTROL PANEL	POTABLE WATER VALVE	V-02420
P604	1"	2-#12	1-#12	SLUDGE BAGGING SYSTEM CONTROL PANEL	POLYMER PUMP	PMP-08401
DRYING BED LIFT STATION						
P700	2"	3-#8	1-#8	DISTRIBUTION PANEL DSP-1	DRYING BED LIFT STATION CONTROL PANEL	TOTAL DISTANCE 225'
P701	1"	3-#12	1-#12	DRYING BED LIFT STATION CONTROL PANEL	DRYING BED LIFT PUMP	PMP-07400A
P702	1"	3-#12	1-#12	DRYING BED LIFT STATION CONTROL PANEL	DRYING BED LIFT PUMP	PMP-07400B
P703	1"	3-#12	1-#12	DRYING BED LIFT STATION CONTROL PANEL	RECEPTACLE & AREA LIGHT	
OVERFLOW LIFT STATION						
P800	1"	2-#10	1-#10	SES	PANEL 'L1'	
P801	1"	2-#12	1-#12	PANEL 'L1'	OVERFLOW CONTROL PANEL	
P802	1"	2-#12	1-#12	OVERFLOW CONTROL PANEL	OVERFLOW PUMP	PMP-07401

NO	BY	DATE	REVISIONS	DATE	APP.

Registered Professional Engineer (Electrical) Certificate No. 73954 JAMES RILEY TOOT Date Signed 9-30-25 Expires 9-30-27

PREPARED BY: WRIGHT ENGINEERING
DESIGNED BY: JHB
DRAWN BY: XAG
CHECKED BY: JHB
SCALE: AS NOTED
DATE: NOV 2025
JOB NO.: B614

THESE DRAWINGS ARE THE PROPERTY OF P.A.C.E. AND SHALL NOT BE REPRODUCED IN ANY MANNER NOR BE USED FOR CONSTRUCTION UNLESS STAMPED "ISSUED FOR CONSTRUCTION".

TITLE: ELECTRICAL CONDUIT + WIRE TABLES I

JOB: TOWN OF JEROME WASTEWATER TREATMENT PLANT
YAVAPAI CO. AZ

PREPARED BY:
PACE
Advanced Water Engineering
8723 E. Via de Commercio, Suite 104, Scottsdale, CA 85258
p. (408) 991-3595 | www.pacewater.com

SHEET
E2.4
76 OF 99 SHEETS

JOB NO. B614

ISSUED FOR BID

WRIGHT engineering corporation
ELECTRICAL ENGINEERING AND DESIGN
165 EAST CHILTON DRIVE
CHANDLER, ARIZONA 85225
PHONE: 480.497.5829
FAX: 480.497.5807
www.wrightengineering.us
Wright Project # 23319

CALL TWO WORKING DAYS BEFORE YOU DIG
602-263-1100
1-800-STAKE-IT
(OUTSIDE MARICOPA COUNTY)

H:\2025\23319-Jerome WWTP\25\E2.4.dwg, 11x17, 1:1, by jhubbs on 11/04/25 at 2:56:48 PM

CONDUIT AND WIRE SCHEDULE FOR CONTROL

CONDUIT NO.	CONDUIT SIZE	POWER	GROUND	CONTROL	FROM	TO	REMARKS
GENERATOR/SES							
C101	3/4"		#14	(2)#14	AUTOMATIC TRANSFER SWITCH	GENERATOR	
C102	3/4"		#14	(2)#14	SBR CONTROL PANEL	AUTOMATIC TRANSFER SWITCH	
C103	3/4"		#14	(6)#14	SBR CONTROL PANEL	GENERATOR	
C104	3/4"		#14	(2)#14	GENERATOR	E-STOP	EST-01000
C105	2"	PULL ROPE			SBR CONTROL PANEL	MCC	
C106	1"	PULL ROPE			SEE SITE PLAN		SPARE
HEADWORKS STATION							
C200	3/4"		#14	(2)#14	SBR CONTROL PANEL	HEADWORKS CONTROL PANEL	
C201	3/4"		#14	(2)#14	HEADWORKS CONTROL PANEL	INFLUENT COARSE SCREEN	EST-03010A
C202	3/4"		#14	(2)#14	HEADWORKS CONTROL PANEL	INFLUENT COARSE SCREEN	EST-03010B
C203	3/4"		#14	(2)#14	HEADWORKS CONTROL PANEL	INFLUENT COARSE SCREEN CONVEYOR	EST-03010C
C204	3/4"		#14	(6)#14	HEADWORKS CONTROL PANEL	V-02020	ZSO-03023,ZSC-03023, HS-03023
C205	1.5"			(4) FACTORY CABLE	HEADWORKS CONTROL PANEL	CONDUIT BODY	LE-03031
C206	3/4"			FACTORY CABLE	HEADWORKS CONTROL PANEL	LEVEL SENSOR	LE-03031
C207	3/4"			FACTORY CABLE	HEADWORKS CONTROL PANEL	LEVEL SENSOR	LE-03032
C208	3/4"			FACTORY CABLE	HEADWORKS CONTROL PANEL	LEVEL SENSOR	LE-03033
C209	3/4"			FACTORY CABLE	HEADWORKS CONTROL PANEL	LEVEL SENSOR	LE-03034

TP=TWISTED SHIELDED PAIR

CONDUIT AND WIRE SCHEDULE FOR CONTROL

CONDUIT NO.	CONDUIT SIZE	POWER	GROUND	CONTROL	FROM	TO	REMARKS
SEQUENCING BATCH REACTOR							
C300	1"		#14	(6)#14	SBR CONTROL PANEL	MCP#1	MXR-05110
				(6)#14			PMP-05100
C350	1"		#14	(6)#14		MCP#2	MXR-05112
				(6)#14			PMP-05101
C301	1"		#14	(4)#14	MCP#1	J-BOX C1	ME & TE-05110
				(4)#14			ME & TE-05100
C351	1"		#14	(4)#14	MCP#2	J-BOX C2	ME & TE-05112
				(4)#14			ME & TE-05101
C302	1"			FACTORY CABLE	J-BOX C1	MXR-05110	ME & TE-05110
C303	1"			FACTORY CABLE		PMP-05100	ME & TE-05100
C352	1"			FACTORY CABLE	J-BOX C2	MXR-05112	ME & TE-05112
C353	1"			FACTORY CABLE		PMP-05101	ME & TE-05101
C310	1.5"		#14	(8)#14	SBR CONTROL PANEL	J-BOX C1	M-05111
				(8)#14			PV-05120
				(2)#14			LSH-05131A
				(2)#14			LSL-05131B
				(4)#14			SBR AIR VALVE #1
C360	1.5"		#14	(8)#14		J-BOX C2	M-05113
				(8)#14			PV-05122
				(2)#14			LSH-05133A
				(2)#14			LSL-05133B
				(4)#14			SBR AIR VALVE #2
C311	1"			FACTORY CABLE	J-BOX C1	DECANTER #1	M-05111
C312	1"			(8)#14		SBR INFLUENT VALVE #1	PV-05120
C313				FACTORY CABLE		HIGH LEVEL FLOAT #3	LSH-05231
C314	1"			(2) FACTORY CABLE		CONDUIT BODY 1	LSH-05131A, LSH-05131B
C315	3/4"			FACTORY CABLE	CONDUIT BODY 1	HIGH LEVEL FLOAT #1	LSH-05131A
C316	3/4"			FACTORY CABLE		LOW LEVEL FLOAT #1	LSL-05131B
C317	3/4"			(4)#14	J-BOX C1	SBR AIR VALVE #1	
C361	1"			FACTORY CABLE	J-BOX C2	DECANTER #2	M-05113
C362	1"			(8)#14		SBR INFLUENT VALVE #2	PV-05122
C363				FACTORY CABLE		HIGH LEVEL FLOAT #4	LSH-05233
C364	1"			(2) FACTORY CABLE		CONDUIT BODY 2	LSH-05133A, LSH-05133B
C365	3/4"			FACTORY CABLE	CONDUIT BODY 2	HIGH LEVEL FLOAT #2	LSH-05133A
C366	3/4"			FACTORY CABLE		LOW LEVEL FLOAT #2	LSL-05133B
C367	3/4"			(4)#14	J-BOX C2	SBR AIR VALVE #2	
C320	1"			#16 TP	SBR CONTROL PANEL	J-BOX C1	LE-05130
				#16 TP			BFV-05121
				#16 TP			LE-05230
				#16 TP			AT-05160A
C370	1"			#16 TP	SBR CONTROL PANEL	J-BOX C2	LE-05132
				#16 TP			BFV-05123
				#16 TP			LE-05232
				#16 TP			AT-05161A
C321	3/4"			FACTORY CABLE	J-BOX C1	LEVEL SENSOR #1	LE-05130
C322	3/4"			#16 TP		DECANTER VALVE	BFV-05121
C323				FACTORY CABLE		LEVEL SENSOR #3	LE-05230
C324	3/4"			#16 TP		D.O. ANALYZER	AT-05160A
C325				FACTORY CABLE	D.O. ANALYZER	D.O. SENSOR	AE-05160B
C371	3/4"			FACTORY CABLE	J-BOX C2	LEVEL SENSOR #2	LE-05132
C372	3/4"			#16 TP		DECANTER VALVE	BFV-05123
C373				FACTORY CABLE		LEVEL SENSOR #4	LE-05232
C374	3/4"			#16 TP		D.O. ANALYZER	AT-05161A
C375				FACTORY CABLE	D.O. ANALYZER	D.O. SENSOR	AE-05161B

TP=TWISTED SHIELDED PAIR

CONDUIT AND WIRE SCHEDULE FOR CONTROL

CONDUIT NO.	CONDUIT SIZE	POWER	GROUND	CONTROL	FROM	TO	REMARKS
CHLORINE CONTACT							
C400	3/4"			#16TP	SBR CONTROL PANEL	FLOW METER	FM-06240 CHLORINE CONTACT
C401	1"			(2)#16TP	SBR CONTROL PANEL	V-02420	ZSO-06221, ZSC-06221, HS-06221 CHLORINE CONTACT
BLOWER ROOM							
C501			#14	(4)#14, (2)#16TP, CAT6	SBR CONTROL PANEL	BLOWER VFD BLR-04310	
C502			#14	(4)#14, (2)#16TP, CAT6		BLOWER VFD BLR-04311	
C503			#14	(4)#14, (2)#16TP, CAT6		BLOWER VFD BLR-04312	
C504			#14	(4)#14, (2)#16TP, CAT6		BLOWER VFD BLR-04313	
C511	3/4"		#14	(2)#14	BLOWER VFD BLR-04310	MOTOR RTD	TS-04310
C512	3/4"		#14	(2)#14	BLOWER VFD BLR-04311	MOTOR RTD	TS-04311
C513	3/4"		#14	(2)#14	BLOWER VFD BLR-04312	MOTOR RTD	TS-04312
C514	3/4"		#14	(2)#14	BLOWER VFD BLR-04313	MOTOR RTD	TS-04313
C520	1"		#14	(16)#14	SBR CONTROL PANEL	J-BOX	TT-04310, TT-04311, TT-04312, TT-04313
C530	1"			(4)#16TP			PT-04310, PT-04311, PT-04312, PT-04313
C521	3/4"		#14	(2)#14	J-BOX	THERMOSTAT AIR LINE BLOWER BLR-04310	TT-04310
C522	3/4"		#14	(2)#14		THERMOSTAT AIR LINE BLOWER BLR-04311	TT-04311
C523	3/4"		#14	(2)#14		THERMOSTAT AIR LINE BLOWER BLR-04312	TT-04312
C524	3/4"		#14	(2)#14		THERMOSTAT AIR LINE BLOWER BLR-04313	TT-04313
C531	3/4"			#16TP	J-BOX	PRESSURE TRANSDUCER AIR LINE BLOWER BLR-04310	PT-04310, PT-04311, PT-04312, PT-04313
C532	3/4"			#16TP		PRESSURE TRANSDUCER AIR LINE BLOWER BLR-04311	PT-04310, PT-04311, PT-04312, PT-04313
C533	3/4"			#16TP		PRESSURE TRANSDUCER AIR LINE BLOWER BLR-04312	PT-04310, PT-04311, PT-04312, PT-04313
C534	3/4"			#16TP		PRESSURE TRANSDUCER AIR LINE BLOWER BLR-04313	PT-04310, PT-04311, PT-04312, PT-04313
DEWATERING							
C600	1"		#14	(4)#14	SBR CONTROL PANEL	SLUDGE BAGGING SYSTEM CONTROL PANEL	
C601	3/4"		#14	(2)#14	SLUDGE BAGGING SYSTEM CONTROL PANEL	DEWATERING PUMP	PMP-08400, VERIFY CABLE TYPE WITH VENDOR
C602	3/4"		#14	(2)#14	SLUDGE BAGGING SYSTEM CONTROL PANEL	DRY POLYMER MIXING UNIT	MXR-08410, VERIFY CABLE TYPE WITH VENDOR
C603	3/4"		#14	(2)#14	SLUDGE BAGGING SYSTEM CONTROL PANEL	INFLUENT PLUG VALVE	V-02420, VERIFY CABLE TYPE WITH VENDOR
C604	3/4"		#14	(2)#14	SLUDGE BAGGING SYSTEM CONTROL PANEL	POLYMER PUMP	PMP-08401, VERIFY CABLE TYPE WITH VENDOR
DRYING BED LIFT STATION							
C700	1"		#14	(4)#14	SBR CONTROL PANEL	DRYING BED LIFT STATION CONTROL PANEL	
C701	1"		FACTORY CABLE		DRYING BED LIFT STATION CONTROL PANEL	PMP-07400A	
C702	1"		FACTORY CABLE		DRYING BED LIFT STATION CONTROL PANEL	PMP-07400B	
C706	1"		(3) FACTORY CABLE		DRYING BED LIFT STATION CONTROL PANEL	LEVEL FLOATS	LSHH-07430A, LSH-07430B, LSL-07430C
OVERFLOW LIFT STATION							
C801	1"		#14	(4)#14	SBR CONTROL PANEL	DRYING BED LIFT STATION CONTROL PANEL	
C802	1"		FACTORY CABLE		DRYING BED LIFT STATION CONTROL PANEL	PMP-07401	
C803	1"		(2) FACTORY CABLE		DRYING BED LIFT STATION CONTROL PANEL	LEVEL FLOATS	LSHH-07431A, LSL-07431B

TP=TWISTED SHIELDED PAIR

NO	BY	DATE	REVISIONS	DATE	APP.

Registered Professional Engineer (Electrical) Certificate No. 73954 JASON BILLEDEAU 09-30-27 Expires 9-30-27

PREPARED BY: WRIGHT ENGINEERING
DESIGNED BY: JHB
DRAWN BY: XAG
CHECKED BY: JHB
SCALE: AS NOTED
DATE: NOV 2025
JOB NO.: B614

THESE DRAWINGS ARE THE PROPERTY OF P.A.C.E. AND SHALL NOT BE REPRODUCED IN ANY MANNER NOR BE USED FOR CONSTRUCTION UNLESS STAMPED "ISSUED FOR CONSTRUCTION".

TITLE: ELECTRICAL CONDUIT + WIRE TABLES II

JOB: TOWN OF JEROME WASTEWATER TREATMENT PLANT YAVAPAI CO. AZ

ISSUED FOR BID

PREPARED BY:
PACE
Advanced Water Engineering
8723 E. VIA de VENTURA, SUITE 230 | SCOTTSDALE, CA 85258
P: (480) 991-3995 | www.pacewater.com

WRIGHT engineering corporation
ELECTRICAL ENGINEERING AND DESIGN
165 EAST CHILTON DRIVE
CHANDLER, ARIZONA 85225
PHONE: 480.497.5829
FAX: 480.497.5807
www.wrightengineering.us
Wright Project # 23319

CALL TWO WORKING DAYS BEFORE YOU DIG
602-263-1100
1-800-STAKE-IT
(OUTSIDE MARICOPA COUNTY)

SHEET E2.5
77 OF 99 SHEETS

JOB NO. B614

C:\2025\Projects\Jerome WWTP\23319 E Dwg Tabs E2.5 Hyperlink.dwt 11/14/25 4:08:40 PM

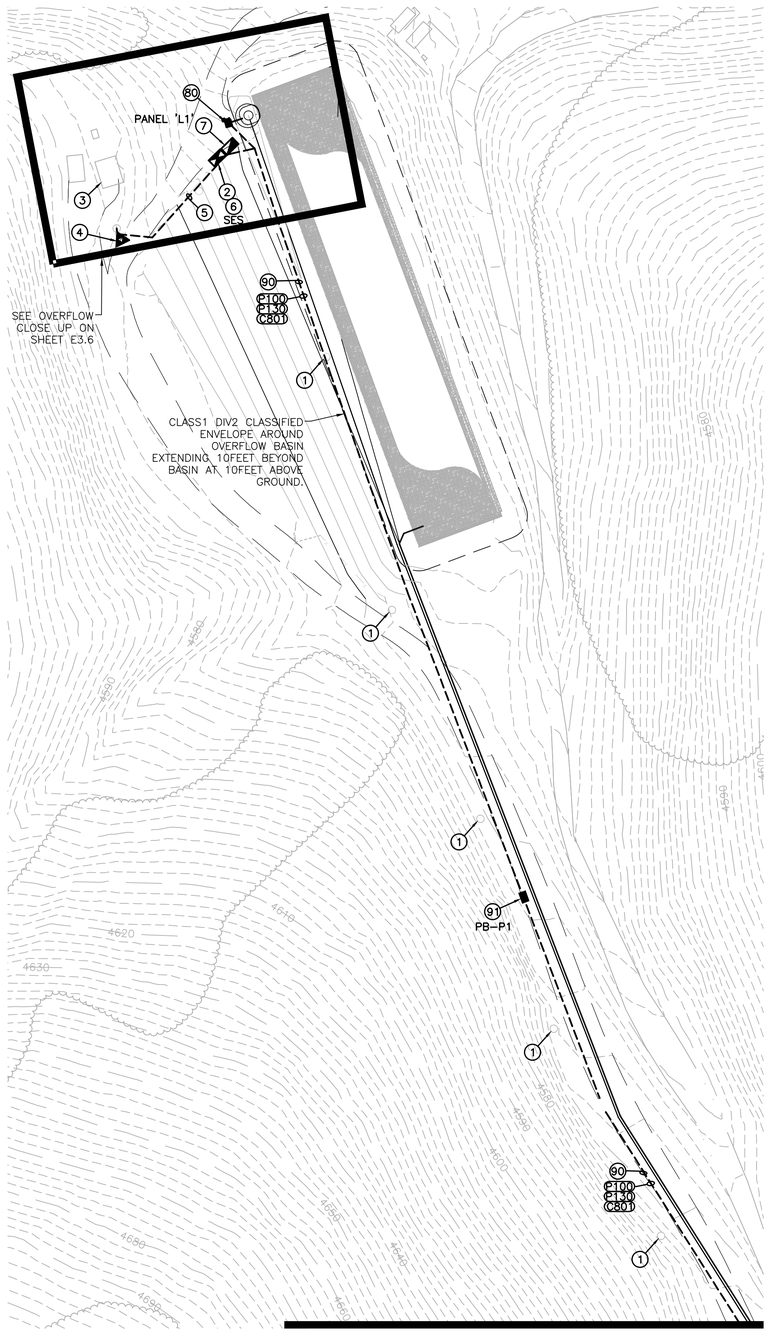

MATCHLINE 'A' SEE ABOVE RIGHT

MATCHLINE 'A' BELOW LEFT

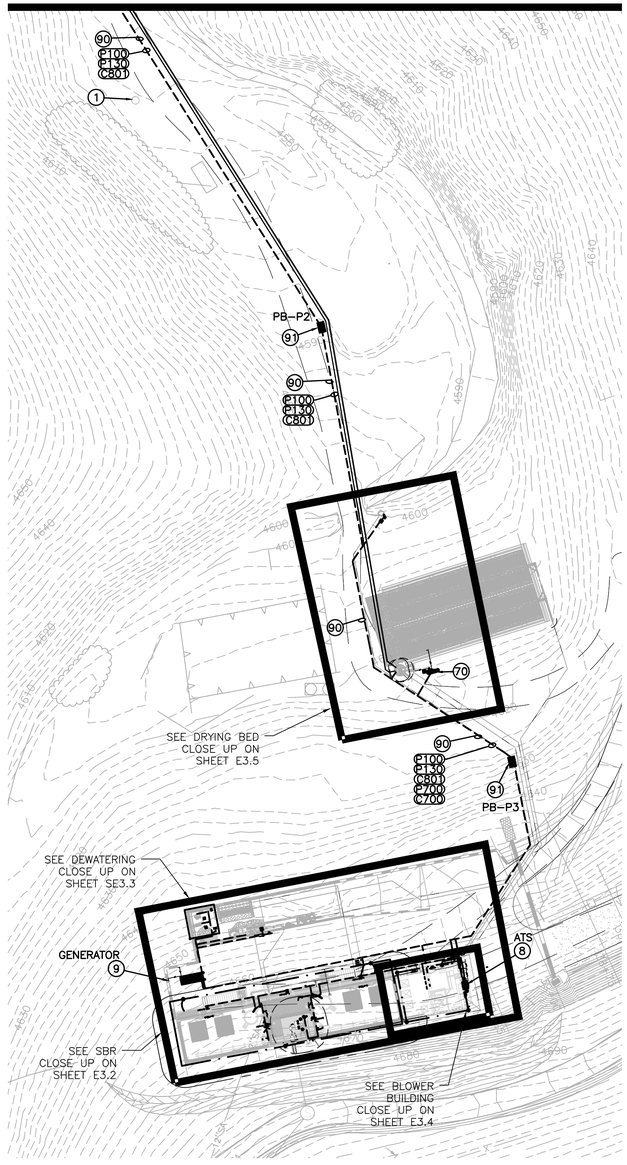

CONSTRUCTION NOTES

1. REMOVE ALL EXISTING CUSTOMER OWNED OVERHEAD ELECTRICAL AND POWER POLE AND DISPOSE OF PROPERLY. COORDINATE WITH OWNER FOR SCHEDULING.
2. REMOVE EXISTING SES AND PANEL AND DISPOSE OF PROPERLY. COORDINATE DISCONNECTION OF THE METER AND SECONDARY CONDUCTORS WITH APS
3. DE-ENERGIZE EXISTING LAB BUILDING UPON COMPLETION OF CONSTRUCTION OF THE NEW LAB. REMOVE ALL EXISTING CONDUCTORS AND ELECTRICAL EQUIPMENT AND DISPOSE OF PROPERLY. COORDINATE ALL WORK WITH OWNER AND POWER COMPANY PRIOR TO DE-ENERGIZATION.
4. COORDINATE WITH APS TO REPLACE THE EXISTING POLE MOUNTED SINGLE PHASE TRANSFORMER. APS TO INSTALL THREE PHASE TRANSFORMERS. CONTRACTOR SHALL VERIFY LOCATION OF NEW TRANSFORMER WITH APS. APS PLANS WILL DETERMINE EXACT LOCATION AND TAKE PRECEDENCE OVER THESE DRAWINGS. COORDINATE ALL WORK WITH APS.
5. APS SERVICE LINE. TRENCH AND INSTALL CONDUIT PER APS SPECIFICATIONS. POWER COMPANY PLANS WILL DETERMINE EXACT LOCATION OF CONDUIT AND TAKE PRECEDENCE OVER THESE DRAWINGS.
6. SES, 400 AMP, 277/480V, 3ø, 4W, SEE DETAIL 1 ON E4.1.
7. MINI-POWER ZONE AND PANELBOARD. SEE DETAIL 1 ON E4.1.
8. ATS 400A 277/480V, 3ø, 4W, SEE DETAIL 2 ON SHEET E4.1.
9. GENERATOR 125KW, 277/480V, 3ø, 4W, SEE DETAIL 1 ON E4.3.
70. 30A DRYING BED LIFT PUMP CONTROL PANEL, 480V, 3ø, 4W. ELECTRICAL CONTRACTOR SHALL MAKE ALL POWER AND CONTROL CONNECTIONS PER THESE PLANS AND SPECIFICATIONS AND THE MANUFACTURERS REQUIREMENTS. SEE DETAIL 1 ON SHEET E4.4.
80. OVERFLOW LIFT PUMP CONTROL PANEL, BY VENDOR. 240V, 1ø, 3W. ELECTRICAL CONTRACTOR SHALL MAKE ALL POWER AND CONTROL CONNECTIONS PER THESE PLANS AND SPECIFICATIONS AND THE MANUFACTURERS REQUIREMENTS. SEE DETAIL 1 ON SHEET E4.4.
90. JOINT TRENCH WITH WATER LINES. MAINTAIN 24-INCH SEPARATION. SEE DETAIL 3 ON SHEET E4.3.
91. STACKED #7 CONCRETE PULL BOX. INSTALL AS SHOWN OR AS NEEDED IF CONDUIT RUNS WILL EXCEED 360 DEGREE OF BENDS OR THE LENGTH EXCEEDS 400 FEET. INSTALL 1 FOR POWER AND 1 FOR CONTROL. SEE DETAIL 5 ON SHEET E4.3.

LEGEND

- PROPOSED 3ø POWER COMPANY TRANSFORMER
- SES 400A 277/480V 3ø 4W
- TRANSFORMER 480V-120/240V
- PANEL 120/240V 1ø 3W
- CONTROL PANEL
- EYS SEALS, CLASS 1 DIVISION 1
- ELECTRICAL SWITCH
- 120V GFCI RECEPTACLE
- 120V GFCI QUADRUPLEX RECEPTACLE
- ELECTRICAL AND COMMUNICATION PULL BOXES
- NEW PULL BOX
- NON FUSED NEMA 4X DISCONNECT
- UNDERGROUND ELECTRICAL CONDUIT
- ABOVE GROUND ELECTRICAL CONDUIT
- FLEXIBLE METALLIC CONDUIT
- GROUNDING ELECTRODE CONDUCTOR
- GROUND ROD WITH INSPECTION WELL. INSPECTION WELL IS ONLY FOR THE FIRST GROUND ROD CONNECTED TO

PROPOSED SITE PLAN ELECTRICAL

NORTH

GRAPHIC SCALE
30 15 0 15 30 60
1 INCH = 30 FEET

WRIGHT engineering corporation
ELECTRICAL ENGINEERING AND DESIGN
165 EAST CHILTON DRIVE
CHANDLER, ARIZONA 85225
PHONE: 480.497.5829
FAX: 480.497.5807
www.wrightengineering.us
Wright Project # 23319

CALL TWO WORKING DAYS BEFORE YOU DIG
602-263-1100
1-800-STAKE-IT
(OUTSIDE MARICOPA COUNTY)

NO	BY	DATE	REVISIONS	DATE	APP.

Registered Professional Engineer (Electrical)
Certificate No. 73954
JASON BELLEDUNT
Date 6-30-27
Expires 6-30-27

PREPARED BY: WRIGHT ENGINEERING
DESIGNED BY: JHB
DRAWN BY: XAG
CHECKED BY: JHB
SCALE: AS NOTED
DATE: NOV 2025
JOB NO. B614

TITLE
ELECTRICAL
PROPOSED SITE PLAN

JOB
TOWN OF JEROME
WASTEWATER
TREATMENT PLANT
YAVAPAI CO. AZ

ISSUED FOR BID

PREPARED BY:
PACE
Advanced Water Engineering
8723 E. VIA de COMMERCIO, SUITE 1-A, SCOTTSDALE, CA 85258
P: (480) 991-3595 | www.pacewater.com

SHEET
E3.1
78 OF 99 SHEETS
JOB NO. B614

THESE DRAWINGS ARE THE PROPERTY OF P.A.C.E. AND SHALL NOT BE REPRODUCED IN ANY MANNER NOR BE USED FOR CONSTRUCTION UNLESS STAMPED "ISSUED FOR CONSTRUCTION".

M:\2025\2519_Jerome_WWTP\2519.dwg, 11x 17, 1:1 plotted on 11/4/25 at 8:58:48 PM

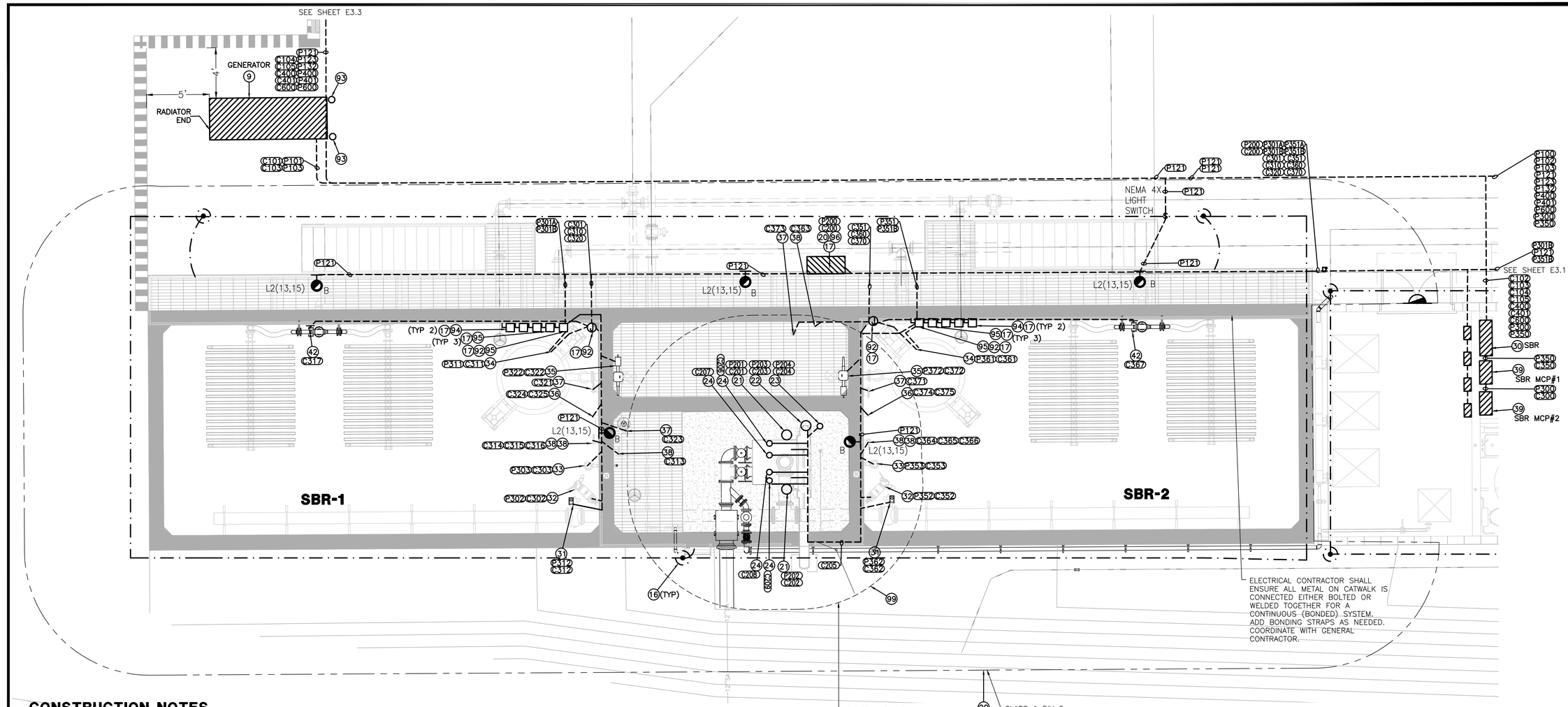

CONSTRUCTION NOTES

(9) GENERATOR 125KW, 277/480V, 3ø, 4W, SEE DETAIL 1 ON E4.3.

(16) LIGHTNING PROTECTION SYSTEM, PER NFPA AND DETAIL 6 ON SHEET E4.6

(17) CLASSIFIED SEAL OFF LISTED FOR CLASS 1 DIV 1. LOCATE WITHIN 10 FEET OF CLASSIFIED AREA BOUNDARY. PVC COATED RMS EYS TYPE OR EQUIVALENT. SEAL SHALL HAVE SEALING COMPOUND CHICO, OR EQUAL.

(20) 20A HEADWORKS CONTROL PANEL, BY VENDOR CLASS 1 DIVISION 2 LISTED. ELECTRICAL CONTRACTOR SHALL MAKE ALL POWER AND CONTROL CONNECTIONS PER THESE PLANS AND SPECIFICATIONS AND THE MANUFACTURERS REQUIREMENTS. SEE DETAIL 1 ON SHEET E4.4.

(21) INFLUENT COARSE SCREEN MOTOR. ELECTRICAL CONTRACTOR SHALL MAKE ALL POWER AND CONTROL CONNECTIONS PER THESE PLANS AND SPECIFICATIONS AND THE MANUFACTURERS REQUIREMENTS.

(22) INFLUENT CONVEYOR MOTOR. ELECTRICAL CONTRACTOR SHALL MAKE ALL POWER AND CONTROL CONNECTIONS PER THESE PLANS AND SPECIFICATIONS AND THE MANUFACTURERS REQUIREMENTS.

(23) POTABLE SOLENOID VALVE AT HEADWORKS. ELECTRICAL CONTRACTOR SHALL MAKE ALL POWER AND CONTROL CONNECTIONS PER THESE PLANS AND SPECIFICATIONS AND THE MANUFACTURERS REQUIREMENTS.

(24) ULTRASONIC LEVEL TRANSDUCER. ELECTRICAL CONTRACTOR SHALL MAKE ALL POWER AND CONTROL CONNECTIONS PER THESE PLANS AND SPECIFICATIONS AND THE MANUFACTURERS REQUIREMENTS.

(30) SBR PANEL BY VENDOR, ELECTRICAL CONTRACTOR SHALL MAKE ALL POWER AND CONTROL CONNECTIONS PER THESE PLANS AND SPECIFICATIONS AND THE MANUFACTURERS REQUIREMENTS.

(31) SBR INFLUENT VALVE. ELECTRICAL CONTRACTOR SHALL MAKE ALL POWER AND CONTROL CONNECTIONS PER THESE PLANS AND SPECIFICATIONS AND THE MANUFACTURERS REQUIREMENTS.

(32) SBR SUBMERSIBLE MIXER. ELECTRICAL CONTRACTOR SHALL MAKE ALL POWER AND CONTROL CONNECTIONS PER THESE PLANS AND SPECIFICATIONS AND THE MANUFACTURERS REQUIREMENTS.

(33) WAS TRANSFER PUMP. ELECTRICAL CONTRACTOR SHALL MAKE ALL POWER AND CONTROL CONNECTIONS PER THESE PLANS AND SPECIFICATIONS AND THE MANUFACTURERS REQUIREMENTS.

(34) DECANT MOTOR. ELECTRICAL CONTRACTOR SHALL MAKE ALL POWER AND CONTROL CONNECTIONS PER THESE PLANS AND SPECIFICATIONS AND THE MANUFACTURERS REQUIREMENTS.

(35) SBR DECANT VALVE. ELECTRICAL CONTRACTOR SHALL MAKE ALL POWER AND CONTROL CONNECTIONS PER THESE PLANS AND SPECIFICATIONS AND THE MANUFACTURERS REQUIREMENTS.

(36) DO TRANSMITTER AND ANALYZER. ELECTRICAL CONTRACTOR SHALL MAKE ALL POWER AND CONTROL CONNECTIONS PER THESE PLANS AND SPECIFICATIONS AND THE MANUFACTURERS REQUIREMENTS.

(37) SUBMERSIBLE PRESSURE TRANSDUCER. ELECTRICAL CONTRACTOR SHALL MAKE ALL POWER AND CONTROL CONNECTIONS PER THESE PLANS AND SPECIFICATIONS AND THE MANUFACTURERS REQUIREMENTS.

(38) LEVEL FLOAT. ELECTRICAL CONTRACTOR SHALL MAKE ALL POWER AND CONTROL CONNECTIONS PER THESE PLANS AND SPECIFICATIONS AND THE MANUFACTURERS REQUIREMENTS.

(39) SBR MOTOR CONTROL PANEL, PROVIDE AND INSTALL. ELECTRICAL CONTRACTOR SHALL MAKE ALL POWER AND CONTROL CONNECTIONS PER THESE PLANS AND SPECIFICATIONS AND THE MANUFACTURERS REQUIREMENTS.

(40) SBR EFFLUENT VALVE. ELECTRICAL CONTRACTOR SHALL MAKE ALL POWER AND CONTROL CONNECTIONS PER THESE PLANS AND SPECIFICATIONS AND THE MANUFACTURERS REQUIREMENTS.

(41) FLOW METER. ELECTRICAL CONTRACTOR SHALL MAKE ALL POWER AND CONTROL CONNECTIONS PER THESE PLANS AND SPECIFICATIONS AND THE MANUFACTURERS REQUIREMENTS.

(42) SBR AIR VALVE. ELECTRICAL CONTRACTOR SHALL MAKE ALL POWER AND CONTROL CONNECTIONS PER THESE PLANS AND SPECIFICATIONS AND THE MANUFACTURERS REQUIREMENTS.

(92) STANCHION MOUNTED NEMA 4X SST JUNCTION BOXES. MAINTAIN 3' CLEARANCE IN FRONT OF EQUIPMENT. EXTRA SLACK SHALL REMAIN IN THE J-BOX FOR FUTURE LEVEL ADJUSTMENT. SEE DETAIL 2 ON SHEET E4.2 AND DETAIL 1 ON SHEET E4.4.

(93) TRAFFIC BOLLARD TO BE INSTALLED PER CIVIL PLANS. LOCATE OUT OF 4 FOOT WORKING SPACE ENVELOPE PER NEC.

(94) NON-FUSED DISCONNECT, NEMA 4X FOR OUTDOOR AND CLASS 1 DIV 1 WITHIN CLASSIFIED BOUNDARY. IF LOCATION IS ABOVE BOUNDARY, NEMA 4X WITH CLASSIFIED SEAL OFFS IS ACCEPTABLE. PROVIDE PERMANENT LABEL SUITABLE FOR CORROSIVE ENVIRONMENTS AND UV RESISTANT. MATCH LABEL NAMING CONVENTION WITH P&ID. SEE DETAIL 5 ON SHEET E4.2 & SEE DETAIL 1 ON SHEET E4.4.

(95) ROTARY TYPE DISCONNECT, NEMA 4X FOR OUTDOOR AND CLASS 1 DIV 1 WITHIN CLASSIFIED BOUNDARY. IF LOCATION IS ABOVE BOUNDARY, NEMA 4X WITH CLASSIFIED SEAL OFFS IS ACCEPTABLE. PROVIDE PERMANENT LABEL SUITABLE FOR CORROSIVE ENVIRONMENTS AND UV RESISTANT. MATCH LABEL NAMING CONVENTION WITH P&ID. SEE DETAIL 5 ON SHEET E4.2 & SEE DETAIL 1 ON SHEET E4.4.

(96) E-STOP, NEMA 4X FOR OUTDOOR AND CLASS 1 DIV 1 WITHIN CLASSIFIED BOUNDARY. IF LOCATION IS ABOVE BOUNDARY, NEMA 4X WITH CLASSIFIED SEAL OFFS IS ACCEPTABLE. PROVIDE PERMANENT LABEL SUITABLE FOR CORROSIVE ENVIRONMENTS AND UV RESISTANT. MATCH LABEL NAMING CONVENTION WITH P&ID. SEE DETAIL 5 ON SHEET E4.2.

CLASS 1 DIV 2
PER NFPA 820
TABLE 5.2.2 SECTION 2C
COARSE FINE SCREEN FACILITIES NOT ENCLOSED, OPEN TO ATMOSPHERE/IF ENCLOSED, THEN THE CLASSIFICATION IS ONLY WITHIN THE TANK.

ENVELOPE: WITHIN A 10 FT AROUND EQUIPMENT AND OPEN CHANNEL

CLASS 1 DIV 2
PER NFPA 820
TABLE 5.2.2 SECTION 7C
PRIMARY SEDIMENTATION TANKS (SBR)
NOT ENCLOSED, OPEN TO ATMOSPHERE.

ENVELOPE: INTERIOR OF THE TANK FROM THE MINIMUM OPERATING WATER SURFACE TO THE TOP OF THE TANK WALL;

ENVELOPE 18 INCHES ABOVE THE TOP OF THE TANK AND EXTENDING 18 INCHES BEYOND THE EXTERIOR WALL;

ENVELOPE 18 INCHES ABOVE GRADE EXTENDING 10 FT HORIZONTALLY FROM THE EXTERIOR TANK WALLS

SBR PLAN ELECTRICAL

(99) CLASSIFIED AREA VERIFY BOUNDARY WITH THE NFPA. INSTALL ANY PANELS, DISCONNECTS, SPLICES, ARC MAKING EQUIPMENT OUT OF THE BOUNDARY, WHERE NOT POSSIBLE THEN INSTALL CLASS 1 DIV 1 LISTED EQUIPMENT. ALL CONDUIT WITHIN BOUNDARY SHALL BE CLASS 1 DIV 1 OR 2 RATED AS REQUIRED BY THE BOUNDARY. USE PVC COATED THREADED RMC CONDUIT, INSTALL STAINLESS STEEL 316 ENCLOSURES, HARDWARE AND EQUIPMENT WITHIN 10 FEET OF THE BOUNDARY. INSTALL CLASSIFIED SEAL OFFS WITHIN 10 FEET OF THE BOUNDARY, AT A PANEL OR JUNCTION BOX IS PREFERRED.

LEGEND

- PROPOSED 3ø POWER COMPANY TRANSFORMER
- SES 400A 277/480V 3ø 4W
- TRANSFORMER 480V–120/240V
- PANEL 120/240V 1ø 3W
- CONTROL PANEL
- EYS SEALS, CLASS 1 DIVISION 1
- ELECTRICAL SWITCH
- 120V GFCI RECEPTACLE
- 120V GFCI QUADRUPLEX RECEPTACLE
- ELECTRICAL AND COMMUNICATION PULL BOXES
- NEW PULL BOX
- NON FUSED NEMA 4X DISCONNECT
- UNDERGROUND ELECTRICAL CONDUIT
- ABOVE GROUND ELECTRICAL CONDUIT
- FLEXIBLE METALLIC CONDUIT
- GROUNDING ELECTRODE CONDUCTOR
- GROUND ROD WITH INSPECTION WELL. INSPECTION WELL IS ONLY FOR THE FIRST GROUND ROD CONNECTED TO

GRAPHIC SCALE
4 2 0 2 4 8
1 INCH = 4 FEET
NORTH

WRIGHT engineering corporation
ELECTRICAL ENGINEERING AND DESIGN
165 EAST CHILTON DRIVE
CHANDLER, ARIZONA 85225
PHONE: 480.497.5829
FAX: 480.497.5807
www.wrightengineering.us
Wright Project # 23319

CALL TWO WORKING DAYS BEFORE YOU DIG
602-263-1100
1-800-STAKE-IT
(OUTSIDE MARICOPA COUNTY)

NO	BY	DATE	REVISIONS	DATE	APP.

Registered Professional Engineer (Electrical) Certificate No. 73954 JAMES RILEY HEDT Date Signed 9-30-25 Expires 9-30-27

PREPARED BY: WRIGHT ENGINEERING
DESIGNED BY: JHB
DRAWN BY: XAG
CHECKED BY: JHB
SCALE: AS NOTED
DATE: NOV 2025
JOB NO. B614

THESE DRAWINGS ARE THE PROPERTY OF P.A.C.E. AND SHALL NOT BE REPRODUCED IN ANY MANNER NOR BE USED FOR CONSTRUCTION UNLESS STAMPED "ISSUED FOR CONSTRUCTION".

TITLE
ELECTRICAL
SBR PLAN

JOB
TOWN OF JEROME
WASTEWATER
TREATMENT PLANT
YAVAPAI CO. AZ

ISSUED FOR BID

PREPARED BY:
PACE
Advanced Water Engineering
Consulting, Design & Construction Services
8723 E. VIA DE VENTURA, SUITE A-140, SCOTTSDALE, AZ 85258
P: (480) 991-3595 | www.pacewater.com

SHEET
E3.2
79 OF 99 SHEETS
JOB NO. B614

X:\2025\25-Dwgs\WTP25115.dwg, Tab: E3.2, by:jessie.an 11/4/25 at 9:05:43 PM

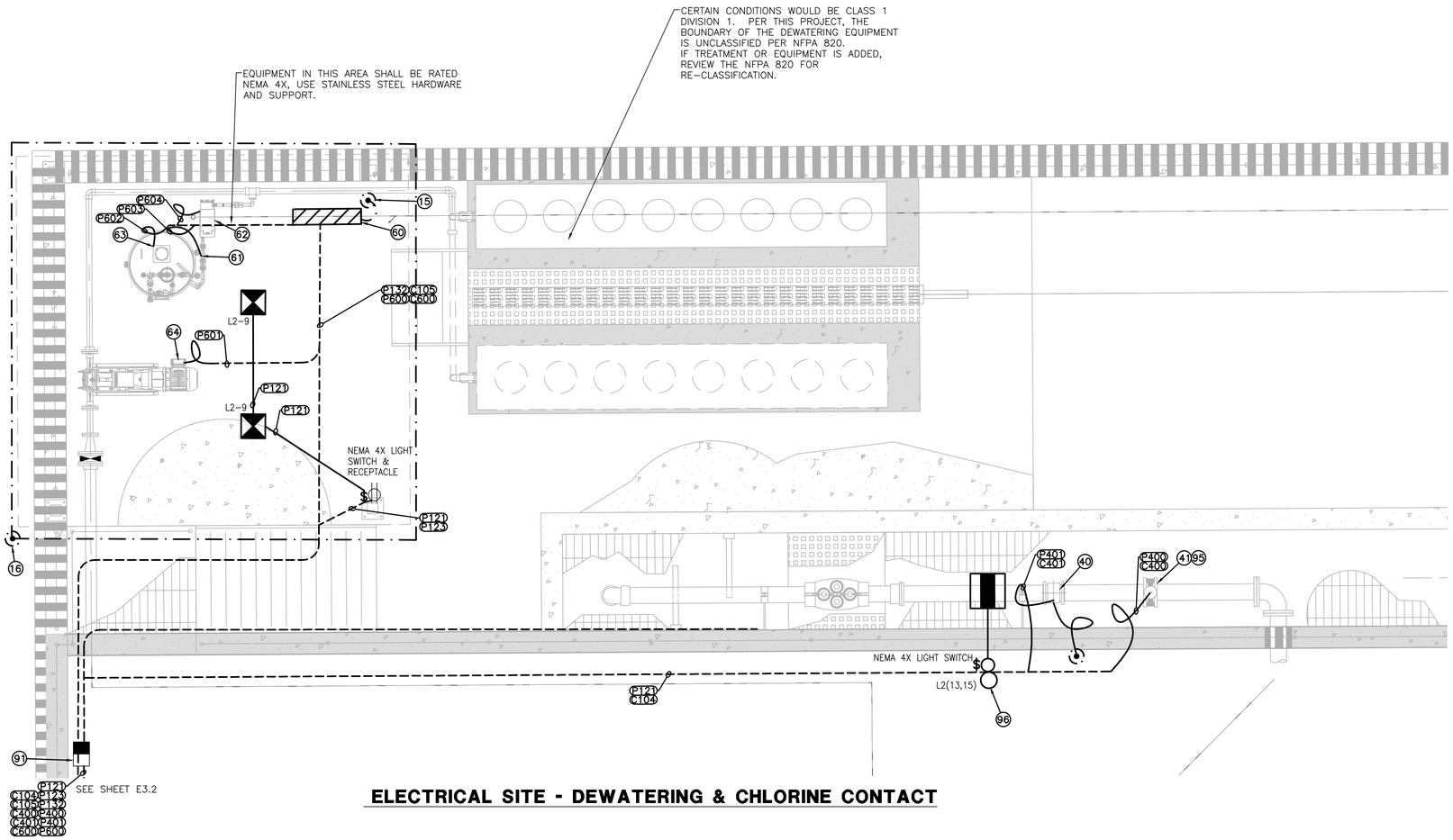

ELECTRICAL SITE - DEWATERING & CHLORINE CONTACT

CONSTRUCTION NOTES

(15) GROUNDING ELECTRODE CONDUCTORS, GROUND ROD, AND INSPECTION WELL FOR ONLY THE FIRST GROUND ROD, PER SINGLE LINE DIAGRAMS AND DETAILS ON SHEET E4.6.

(16) LIGHTNING PROTECTION SYSTEM, PER NFPA AND DETAIL 6 ON SHEET E4.6

(40) SBR EFFLUENT VALVE. ELECTRICAL CONTRACTOR SHALL MAKE ALL POWER AND CONTROL CONNECTIONS PER THESE PLANS AND SPECIFICATIONS AND THE MANUFACTURERS REQUIREMENTS.

(41) FLOW METER. ELECTRICAL CONTRACTOR SHALL MAKE ALL POWER AND CONTROL CONNECTIONS PER THESE PLANS AND SPECIFICATIONS AND THE MANUFACTURERS REQUIREMENTS.

(60) 20A SLUDGE BAGGING SYSTEM CONTROL PANEL, BY VENDOR. ELECTRICAL CONTRACTOR SHALL MAKE ALL POWER AND CONTROL CONNECTIONS PER THESE PLANS AND SPECIFICATIONS AND THE MANUFACTURERS REQUIREMENTS.

(61) POTABLE WATER VALVE. ELECTRICAL CONTRACTOR SHALL MAKE ALL POWER AND CONTROL CONNECTIONS PER THESE PLANS AND SPECIFICATIONS AND THE MANUFACTURERS REQUIREMENTS.

(62) POLYMER METERING PUMP. ELECTRICAL CONTRACTOR SHALL MAKE ALL POWER AND CONTROL CONNECTIONS PER THESE PLANS AND SPECIFICATIONS AND THE MANUFACTURERS REQUIREMENTS.

(63) DRY POLYMER MIXER. ELECTRICAL CONTRACTOR SHALL MAKE ALL POWER AND CONTROL CONNECTIONS PER THESE PLANS AND SPECIFICATIONS AND THE MANUFACTURERS REQUIREMENTS.

(64) DEWATERING FEED PUMP. ELECTRICAL CONTRACTOR SHALL MAKE ALL POWER AND CONTROL CONNECTIONS PER THESE PLANS AND SPECIFICATIONS AND THE MANUFACTURERS REQUIREMENTS.

(91) STACKED #7 CONCRETE PULL BOX. INSTALL AS SHOWN OR AS NEEDED IF CONDUIT RUNS WILL EXCEED 360 DEGREE OF BENDS OR THE LENGTH EXCEEDS 400 FEET. INSTALL 1 FOR POWER AND 1 FOR CONTROL. SEE DETAIL 5 ON SHEET E4.3.

(95) ROTARY TYPE DISCONNECT, NEMA 4X FOR OUTDOOR AND CLASS 1 DIV 1 WITHIN CLASSIFIED BOUNDARY. IF LOCATION IS ABOVE BOUNDARY, NEMA 4X WITH CLASSIFIED SEAL OFFS IS ACCEPTABLE. PROVIDE PERMANENT LABEL SUITABLE FOR CORROSIVE ENVIRONMENTS AND UV RESISTANT. MATCH LABEL NAMING CONVENTION WITH P&ID. SEE DETAIL 5 ON SHEET E4.2 & SEE DETAIL 1 ON SHEET E4.4.

(96) E-STOP, NEMA 4X FOR OUTDOOR AND CLASS 1 DIV 1 WITHIN CLASSIFIED BOUNDARY. IF LOCATION IS ABOVE BOUNDARY, NEMA 4X WITH CLASSIFIED SEAL OFFS IS ACCEPTABLE. PROVIDE PERMANENT LABEL SUITABLE FOR CORROSIVE ENVIRONMENTS AND UV RESISTANT. MATCH LABEL NAMING CONVENTION WITH P&ID. SEE DETAIL 5 ON SHEET E4.2.

LEGEND

- PROPOSED 3ø POWER COMPANY TRANSFORMER
- SES 400A 277/480V 3ø 4W
- TRANSFORMER 480V-120/240V
- PANEL 120/240V 1ø 3W
- CONTROL PANEL
- EYS SEALS, CLASS 1 DIVISION 1
- $ ELECTRICAL SWITCH
- 120V GFCI RECEPTACLE
- 120V GFCI QUADRUPLEX RECEPTACLE
- ELECTRICAL AND COMMUNICATION PULL BOXES
- NEW PULL BOX
- NON FUSED NEMA 4X DISCONNECT
- UNDERGROUND ELECTRICAL CONDUIT
- ABOVE GROUND ELECTRICAL CONDUIT
- FLEXIBLE METALLIC CONDUIT
- GROUNDING ELECTRODE CONDUCTOR
- GROUND ROD WITH INSPECTION WELL. INSPECTION WELL IS ONLY FOR THE FIRST GROUND ROD CONNECTED TO THE GROUNDING ELECTRODE CONDUCTOR.

GRAPHIC SCALE
2 1 0 1 2 4
1 INCH = 2 FEET
NORTH

WRIGHT engineering corporation
ELECTRICAL ENGINEERING AND DESIGN
165 EAST CHILTON DRIVE
CHANDLER, ARIZONA 85225
PHONE: 480.497.5829
FAX: 480.497.5807
www.wrightengineering.us
Wright Project # 23319

CALL TWO WORKING DAYS BEFORE YOU DIG
602-263-1100
1-800-STAKE-IT
(OUTSIDE MARICOPA COUNTY)

ISSUED FOR BID

NO	BY	DATE	REVISIONS	DATE	APP.

Registered Professional Engineer (Electrical) Certificate No. 73954 JAMES BELLEDIT 08-31-27 Expires 8-31-27

PREPARED BY: WRIGHT ENGINEERING
DESIGNED BY: JHB
DRAWN BY: XAG
CHECKED BY: JHB
DATE: NOV 2025
JOB NO.: B614
SCALE: AS NOTED

THESE DRAWINGS ARE THE PROPERTY OF P.A.C.E. AND SHALL NOT BE REPRODUCED IN ANY MANNER NOR BE USED FOR CONSTRUCTION UNLESS STAMPED "ISSUED FOR CONSTRUCTION".

TITLE: ELECTRICAL DEWATERING PAD

JOB: TOWN OF JEROME WASTEWATER TREATMENT PLANT YAVAPAI CO. AZ

PREPARED BY:
PACE
Advanced Water Engineering
8723 E. Via de Commercio, Suite 104, SCOTTSDALE, CA 85258
P: (480) 991-3395 | www.pacewater.com

SHEET E3.3
80 OF 99 SHEETS

JOB NO. B614

I:\JOBS\2019\Jerome WWTP\2019 E Dwg - TAC E3.3 - Dewatering.dwg, 11/26/25 4:58:43 PM

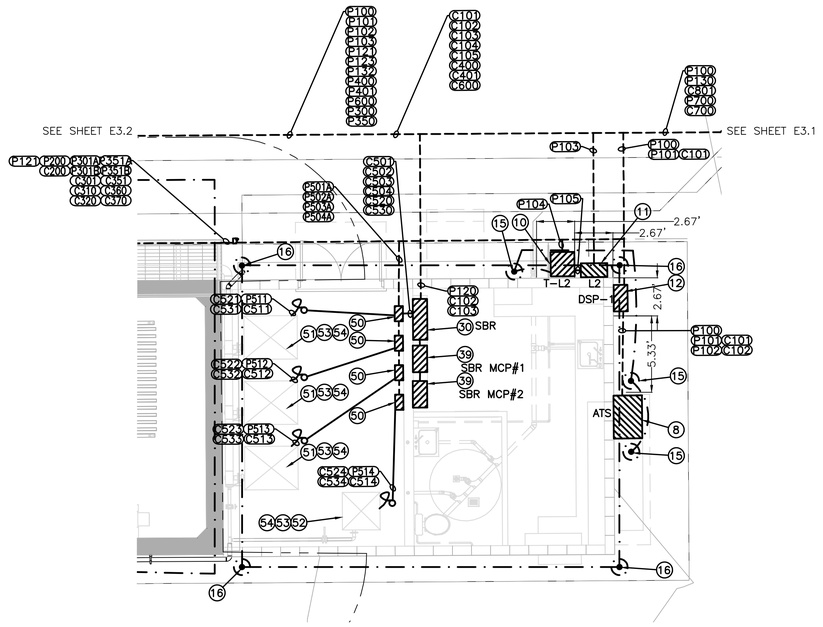

OPS BLOWER ELECTRICAL

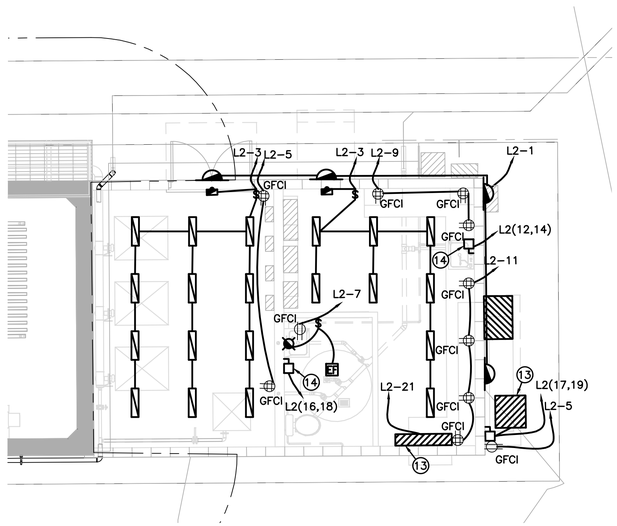

OPS BLOWER LIGHTING & POWER

CONSTRUCTION NOTES

8. ATS 400A 277/480V, 3ø, 4W, SEE DETAIL 2 ON SHEET E4.1.
10. TRANSFORMER 50KVA 480V – 120/240V 1ø, SEE DETAIL 2 ON SHEET E4.1.
11. PANELBOARD, 120/240V, 1ø, 3W, SEE DETAIL 2 ON E4.1.
12. DISTRIBUTION PANEL DSP-1 400A 277/480V, 3ø, 4W, SEE DETAIL 2 ON SHEET E4.1.
13. ELECTRICAL CONTRACTOR SHALL INSTALL POWER FEED TO MINI SPLIT AIR CONDITIONER AND HEAT PUMP & MAKE ALL 240V CONNECTIONS.
14. TANKLESS WATER HEATER & DISCONENCT. ELECTRICAL CONTRACTOR SHALL MAKE ALL POWER AND CONTROL CONNECTIONS PER THESE PLANS AND SPECIFICATIONS AND THE MANUFACTURERS REQUIREMENTS.
15. GROUNDING ELECTRODE CONDUCTORS, GROUND ROD, AND INSPECTION WELL FOR ONLY THE FIRST GROUND ROD, PER SINGLE LINE DIAGRAMS AND DETAILS ON SHEET E4.6.
16. LIGHTNING PROTECTION SYSTEM, PER NFPA AND DETAIL 6 ON SHEET E4.6
30. SBR PANEL BY VENDOR, ELECTRICAL CONTRACTOR SHALL MAKE ALL POWER AND CONTROL CONNECTIONS PER THESE PLANS AND SPECIFICATIONS AND THE MANUFACTURERS REQUIREMENTS.
50. VARIABLE FREQUENCY DRIVE. ELECTRICAL CONTRACTOR SHALL MAKE ALL POWER AND CONTROL CONNECTIONS PER THESE PLANS AND SPECIFICATIONS AND THE MANUFACTURERS REQUIREMENTS.
51. SBR AERATION BLOWER WITH INTEGRAL DISCONNECT. ELECTRICAL CONTRACTOR SHALL MAKE ALL POWER AND CONTROL CONNECTIONS PER THESE PLANS AND SPECIFICATIONS AND THE MANUFACTURERS REQUIREMENTS.
52. DIGESTER AERATION BLOWER WITH INTEGRAL DISCONNECT. ELECTRICAL CONTRACTOR SHALL MAKE ALL POWER AND CONTROL CONNECTIONS PER THESE PLANS AND SPECIFICATIONS AND THE MANUFACTURERS REQUIREMENTS.
53. PRESSURE TRANSDUCER. ELECTRICAL CONTRACTOR SHALL MAKE ALL POWER AND CONTROL CONNECTIONS PER THESE PLANS AND SPECIFICATIONS AND THE MANUFACTURERS REQUIREMENTS.
54. TEMPERATURE TRANSDUCER. ELECTRICAL CONTRACTOR SHALL MAKE ALL POWER AND CONTROL CONNECTIONS PER THESE PLANS AND SPECIFICATIONS AND THE MANUFACTURERS REQUIREMENTS.

LEGEND

- PROPOSED 3ø POWER COMPANY TRANSFORMER
- SES 400A 277/480V 3ø 4W
- TRANSFORMER 480V–120/240V
- PANEL 120/240V 1ø 3W
- CONTROL PANEL
- EYS SEALS, CLASS 1 DIVISION 1
- ELECTRICAL SWITCH
- 120V GFCI RECEPTACLE
- 120V GFCI QUADRUPLEX RECEPTACLE
- ELECTRICAL AND COMMUNICATION PULL BOXES
- NEW PULL BOX
- NON FUSED NEMA 4X DISCONNECT
- UNDERGROUND ELECTRICAL CONDUIT
- ABOVE GROUND ELECTRICAL CONDUIT
- FLEXIBLE METALLIC CONDUIT
- GROUNDING ELECTRODE CONDUCTOR
- GROUND ROD WITH INSPECTION WELL. INSPECTION WELL IS ONLY FOR THE FIRST GROUND ROD CONNECTED TO

GRAPHIC SCALE
5 2.5 0 2.5 5 10
1 INCH = 5 FEET
NORTH

WRIGHT engineering corporation
ELECTRICAL ENGINEERING AND DESIGN
165 EAST CHILTON DRIVE
CHANDLER, ARIZONA 85225
PHONE: 480.497.5829
FAX: 480.497.5807
www.wrightengineering.us
Wright Project # 23319

CALL TWO WORKING DAYS BEFORE YOU DIG
602-263-1100
1-800-STAKE-IT
(OUTSIDE MARICOPA COUNTY)

NO	BY	DATE	REVISIONS	DATE	APP.

Registered Professional Engineer (Electrical) Certificate No. 73954 JAMES RILLETT DAY Date Signed 11-24-25 Expires 9-30-27

PREPARED BY: WRIGHT ENGINEERING
DESIGNED BY: JHB
DRAWN BY: XAG
CHECKED BY: JHB
DATE: NOV 2025
JOB NO.: B614
SCALE: AS NOTED

THESE DRAWINGS ARE THE PROPERTY OF P.A.C.E. AND SHALL NOT BE REPRODUCED IN ANY MANNER NOR BE USED FOR CONSTRUCTION UNLESS STAMPED "ISSUED FOR CONSTRUCTION".

TITLE: ELECTRICAL BLOWER OPS

JOB: TOWN OF JEROME WASTEWATER TREATMENT PLANT YAVAPAI CO. AZ

ISSUED FOR BID

PREPARED BY:
PACE
Advanced Water Engineering
8723 E VIA de VENTURA, SUITE A-200, SCOTTSDALE, CA 85258
P: (480) 991-3955 | www.pacewater.com

SHEET
E3.4
81 OF 99 SHEETS

JOB NO. B614

C:\2025\01b_Jerome WWTP\2025 E Dwg - Tab: E3.4 - by jaime on 11/25/25 at 08:43 PM

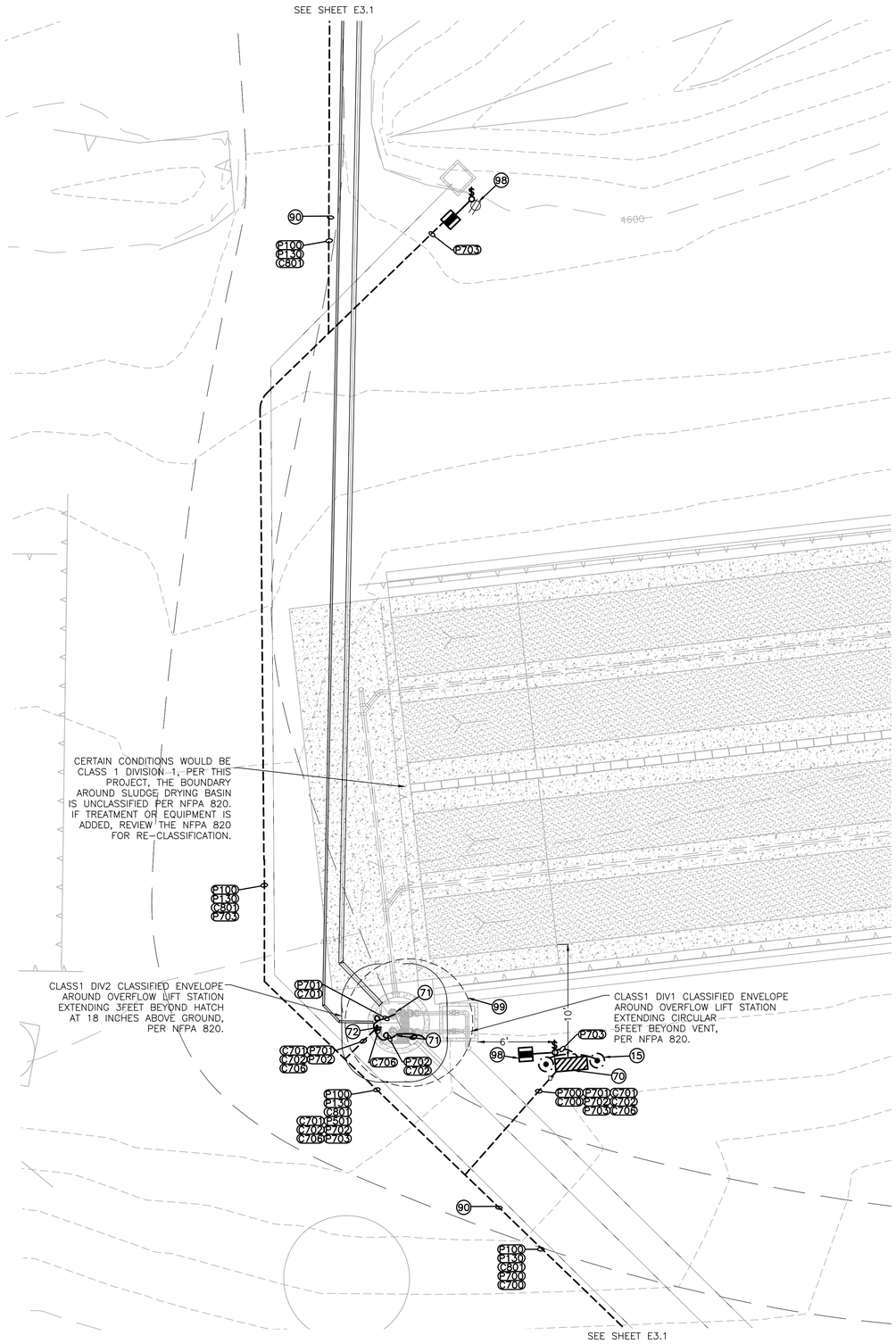

DRYING BED LIFT STATION ELECTRICAL

CONSTRUCTION NOTES

(15) GROUNDING ELECTRODE CONDUCTORS, GROUND ROD, AND INSPECTION WELL FOR ONLY THE FIRST GROUND ROD. PER SINGLE LINE DIAGRAMS AND DETAILS ON SHEET E4.6.

(70) 30A DRYING BED LIFT PUMP CONTROL PANEL, 480V, 3ø, 4W. ELECTRICAL CONTRACTOR SHALL MAKE ALL POWER AND CONTROL CONNECTIONS PER THESE PLANS AND SPECIFICATIONS AND THE MANUFACTURERS REQUIREMENTS. SEE DETAIL 1 ON SHEET E4.4.

(71) DRYING BED LIFT PUMP. ELECTRICAL CONTRACTOR SHALL MAKE ALL POWER AND CONTROL CONNECTIONS PER THESE PLANS AND SPECIFICATIONS AND THE MANUFACTURERS REQUIREMENTS. SEE DETAIL 4 ON SHEET E4.5.

(72) LEVEL FLOAT. ELECTRICAL CONTRACTOR SHALL MAKE ALL POWER AND CONTROL CONNECTIONS PER THESE PLANS AND SPECIFICATIONS AND THE MANUFACTURERS REQUIREMENTS. SEE DETAIL 4 ON SHEET E4.5.

(90) JOINT TRENCH WITH WATER LINES. MAINTAIN 24-INCH SEPARATION. SEE DETAIL 3 ON SHEET E4.3.

(98) 20A 120V GFCI DUPLEX RECEPTACLE WITH METAL WEATHERPROOF WHILE-IN-USE AND LOCKABLE COVER INSTALLED ONTO LIGHT POLE. SEE DETAIL 2 ON SHEET E4.5.

(99) CLASSIFIED AREA VERIFY BOUNDARY WITH THE NFPA. INSTALL ANY PANELS, DISCONNECTS, SPLICES, ARC MAKING EQUIPMENT OUT OF THE BOUNDARY, WHERE NOT POSSIBLE THEN INSTALL CLASS 1 DIV 1 LISTED EQUIPMENT. ALL CONDUIT WITHIN BOUNDARY SHALL BE CLASS 1 DIV 1 OR 2 RATED AS REQUIRED BY THE BOUNDARY. USE PVC COATED THREADED RMC CONDUIT, INSTALL STAINLESS STEEL 316 ENCLOSURES, HARDWARE AND EQUIPMENT WITHIN 10 FEET OF THE BOUNDARY. INSTALL CLASSIFIED SEAL OFFS WITHIN 10 FEET OF THE BOUNDARY, AT A PANEL OR JUNCTION BOX IS PREFERRED.

LEGEND

- PROPOSED 3ø POWER COMPANY TRANSFORMER
- SES 400A 277/480V 3ø 4W
- TRANSFORMER 480V-120/240V
- PANEL 120/240V 1ø 3W
- CONTROL PANEL
- EYS SEALS, CLASS 1 DIVISION 1
- ELECTRICAL SWITCH
- 120V GFCI RECEPTACLE
- 120V GFCI QUADRUPLEX RECEPTACLE
- ELECTRICAL AND COMMUNICATION PULL BOXES
- NEW PULL BOX
- NON FUSED NEMA 4X DISCONNECT
- UNDERGROUND ELECTRICAL CONDUIT
- ABOVE GROUND ELECTRICAL CONDUIT
- FLEXIBLE METALLIC CONDUIT
- GROUNDING ELECTRODE CONDUCTOR
- GROUND ROD WITH INSPECTION WELL. INSPECTION WELL IS ONLY FOR THE FIRST GROUND ROD CONNECTED TO

GRAPHIC SCALE
5 2.5 0 2.5 5 10
1 INCH = 5 FEET
NORTH

WRIGHT engineering corporation
ELECTRICAL ENGINEERING AND DESIGN
165 EAST CHILTON DRIVE
CHANDLER, ARIZONA 85225
PHONE: 480.497.5829
FAX: 480.497.5807
www.wrightengineering.us
Wright Project # 23319

CALL TWO WORKING DAYS BEFORE YOU DIG
602-263-1100
1-800-STAKE-IT
(OUTSIDE MARICOPA COUNTY)

NO	BY	DATE	REVISIONS	DATE	APP.

Registered Professional Engineer (Retired) Certificate No. 73954 JAMES RUSSELL DAVIS Date Signed 9-30-25 Expires 9-30-27

PREPARED BY: WRIGHT ENGINEERING
DESIGNED BY: JHB
DRAWN BY: XAG
CHECKED BY: JHB
SCALE: AS NOTED
DATE: NOV 2025
JOB NO.: B614

THESE DRAWINGS ARE THE PROPERTY OF P.A.C.E. AND SHALL NOT BE REPRODUCED IN ANY MANNER NOR BE USED FOR CONSTRUCTION UNLESS STAMPED "ISSUED FOR CONSTRUCTION".

TITLE
ELECTRICAL
DRYING BED LIFT STATION

JOB
TOWN OF JEROME
WASTEWATER
TREATMENT PLANT
YAVAPAI CO. AZ

ISSUED FOR BID

PREPARED BY:
PACE
Advanced Water Engineering
8723 E. Via de Commercio, Suite 1-104, Scottsdale, CA 85258
P: (480) 991-3595 | www.pacewater.com

SHEET
E3.5
82 OF 99 SHEETS
JOB NO. B614

10/22/2025 by:Jamie WWTP25.dwg, Tab: E3.1, by:jaustin on 10/22/25 at 3:58:49 PM

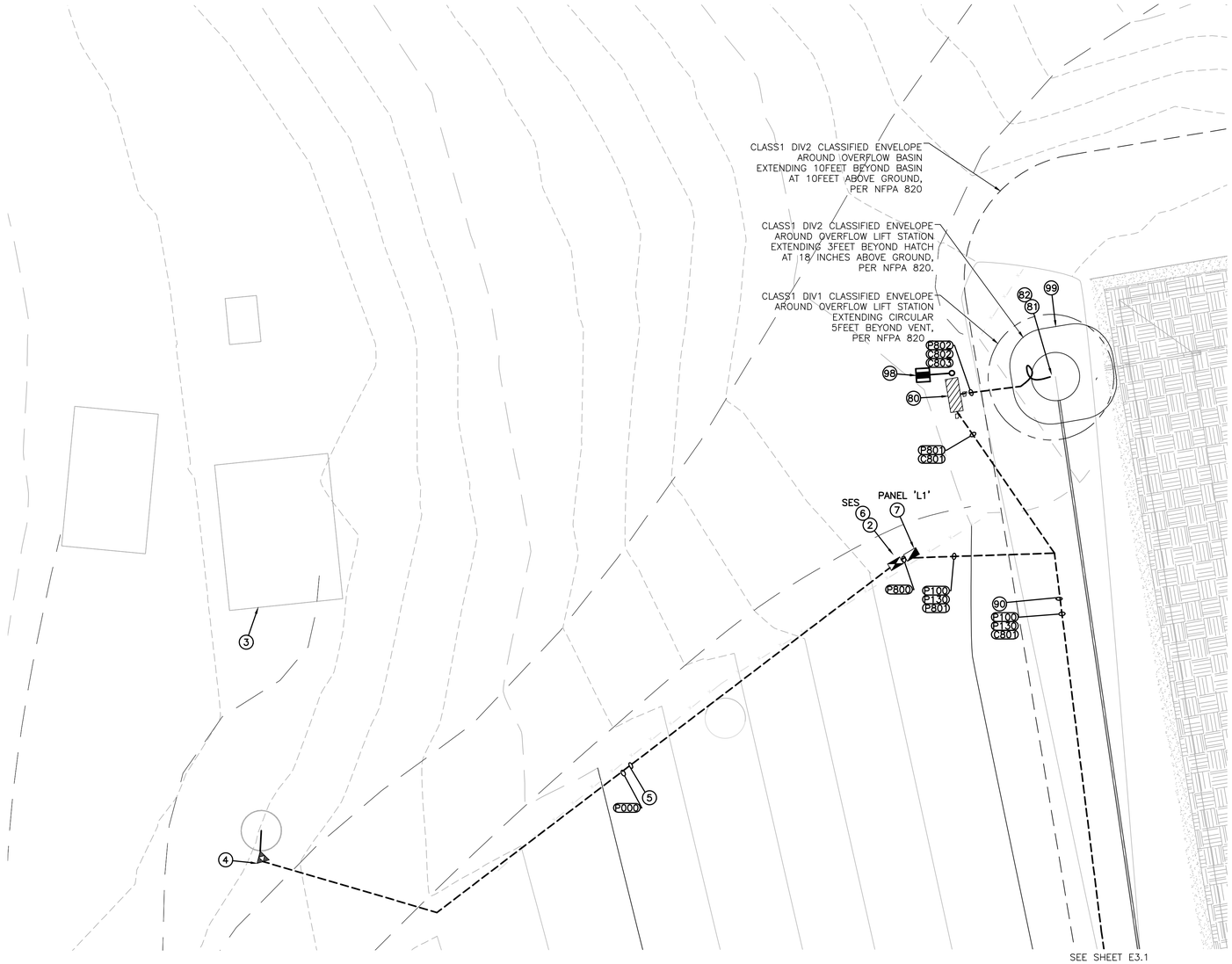

CONSTRUCTION NOTES

(2) REMOVE EXISTING SES AND PANEL AND DISPOSE OF PROPERLY. COORDINATE DISCONNECTION OF THE METER AND SECONDARY CONDUCTORS WITH APS

(3) DE-ENERGIZE EXISTING LAB BUILDING UPON COMPLETION OF CONSTRUCTION OF THE NEW LAB. REMOVE ALL EXISTING CONDUCTORS AND ELECTRICAL EQUIPMENT AND DISPOSE OF PROPERLY. COORDINATE ALL WORK WITH OWNER AND POWER COMPANY PRIOR TO DE-ENERGIZATION.

(4) COORDINATE WITH APS TO REPLACE THE EXISTING POLE MOUNTED SINGLE PHASE TRANSFORMER. APS TO INSTALL THREE PHASE TRANSFORMERS. CONTRACTOR SHALL VERIFY LOCATION OF NEW TRANSFORMER WITH APS. APS PLANS WILL DETERMINE EXACT LOCATION AND TAKE PRECEDENCE OVER THESE DRAWINGS. COORDINATE ALL WORK WITH APS.

(5) APS SERVICE LINE. TRENCH AND INSTALL CONDUIT PER APS SPECIFICATIONS. POWER COMPANY PLANS WILL DETERMINE EXACT LOCATION OF CONDUIT AND TAKE PRECEDENCE OVER THESE DRAWINGS.

(6) SES, 400 AMP, 277/480V, 3ø, 4W, SEE DETAIL 1 ON E4.1.

(80) OVERFLOW LIFT PUMP CONTROL PANEL, BY VENDOR. 240V, 1ø, 3W. ELECTRICAL CONTRACTOR SHALL MAKE ALL POWER AND CONTROL CONNECTIONS PER THESE PLANS AND SPECIFICATIONS AND THE MANUFACTURERS REQUIREMENTS. SEE DETAIL 1 ON SHEET E4.4.

(81) OVERFLOW LIFT PUMP. ELECTRICAL CONTRACTOR SHALL MAKE ALL POWER AND CONTROL CONNECTIONS PER THESE PLANS AND SPECIFICATIONS AND THE MANUFACTURERS REQUIREMENTS. SEE DETAIL 4 ON SHEET E4.5.

(82) LEVEL FLOAT. ELECTRICAL CONTRACTOR SHALL MAKE ALL POWER AND CONTROL CONNECTIONS PER THESE PLANS AND SPECIFICATIONS AND THE MANUFACTURERS REQUIREMENTS. SEE DETAIL 4 ON SHEET E4.5.

(90) JOINT TRENCH WITH WATER LINES. MAINTAIN 24-INCH SEPARATION. SEE DETAIL 3 ON SHEET E4.3.

(98) 20A 120V GFCI DUPLEX RECEPTACLE WITH METAL WEATHERPROOF WHILE-IN-USE AND LOCKABLE COVER INSTALLED ONTO LIGHT POLE. SEE DETAIL 2 ON SHEET E4.5.

LEGEND

- PROPOSED 3ø POWER COMPANY TRANSFORMER
- SES 400A 277/480V 3ø 4W
- TRANSFORMER 480V-120/240V
- PANEL 120/240V 1ø 3W
- CONTROL PANEL
- EYS SEALS, CLASS 1 DIVISION 1
- ELECTRICAL SWITCH
- 120V GFCI RECEPTACLE
- 120V GFCI QUADRUPLEX RECEPTACLE
- ELECTRICAL AND COMMUNICATION PULL BOXES
- NEW PULL BOX
- NON FUSED NEMA 4X DISCONNECT
- UNDERGROUND ELECTRICAL CONDUIT
- ABOVE GROUND ELECTRICAL CONDUIT
- FLEXIBLE METALLIC CONDUIT
- GROUNDING ELECTRODE CONDUCTOR
- GROUND ROD WITH INSPECTION WELL. INSPECTION WELL IS ONLY FOR THE FIRST GROUND ROD CONNECTED TO

ELECTRICAL SITE PLAN - SES & OVERFLOW PUMP STATION

NORTH

GRAPHIC SCALE
5 2.5 0 2.5 5 10
1 INCH = 5 FEET

WRIGHT engineering corporation
ELECTRICAL ENGINEERING AND DESIGN
165 EAST CHILTON DRIVE
CHANDLER, ARIZONA 85225
PHONE: 480.497.5829
FAX: 480.497.5807
www.wrightengineering.us
Wright Project # 23319

CALL TWO WORKING DAYS BEFORE YOU DIG
602-263-1100
1-800-STAKE-IT
(OUTSIDE MARICOPA COUNTY)

NO	BY	DATE	REVISIONS	DATE	APP.

Registered Professional Engineer (Electrical) Certificate No. 73954 JAMES RUSSELL LOTT 09-30-24 Expires 9-30-27

PREPARED BY: WRIGHT ENGINEERING
DESIGNED BY: JHB
DRAWN BY: XAG
CHECKED BY: JHB
SCALE: AS NOTED
DATE: NOV 2025
JOB NO. B614

TITLE: ELECTRICAL OVERFLOW BASIN

JOB: TOWN OF JEROME WASTEWATER TREATMENT PLANT
YAVAPAI CO. AZ

PREPARED BY:
PACE
Advanced Water Engineering
8723 E. VIA de VENTURA, SUITE A-200, SCOTTSDALE, CA 85258
P: (480) 991-3595 | www.pacewater.com

ISSUED FOR BID

SHEET
E3.6
83 OF 99 SHEETS

JOB NO. B614

THESE DRAWINGS ARE THE PROPERTY OF P.A.C.E. AND SHALL NOT BE REPRODUCED IN ANY MANNER NOR BE USED FOR CONSTRUCTION UNLESS STAMPED "ISSUED FOR CONSTRUCTION".

K:\2025\25-pwww\WWTP\25195.dwg Tab: E3.6 by pwww on 11/05/25 at 8:40:41 PM

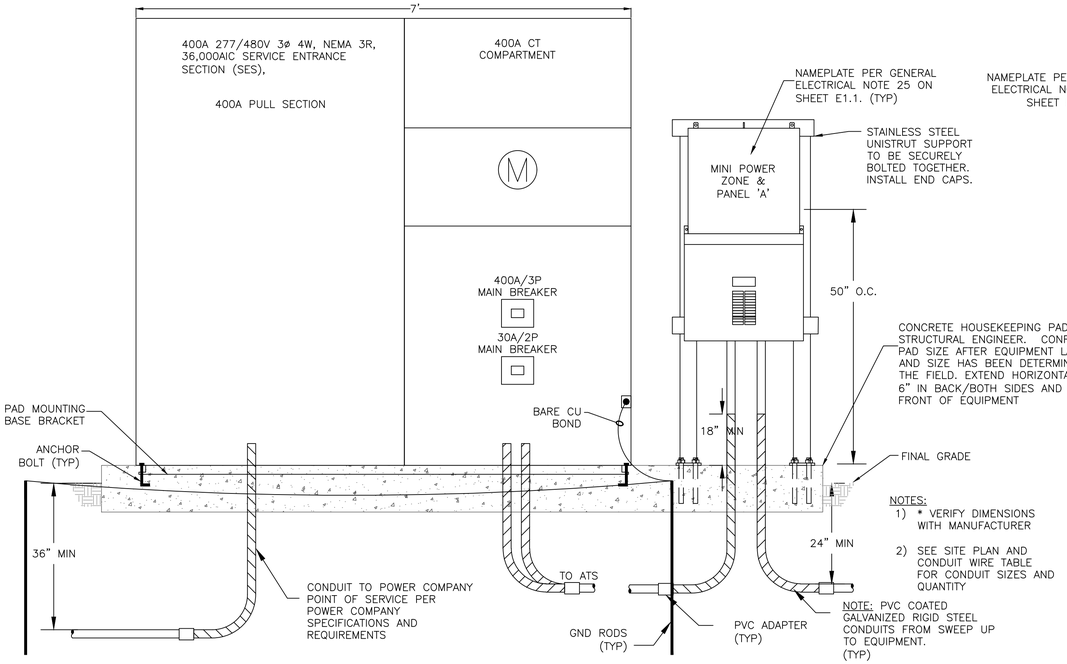

1 SES ELEVATION DETAIL
NO SCALE

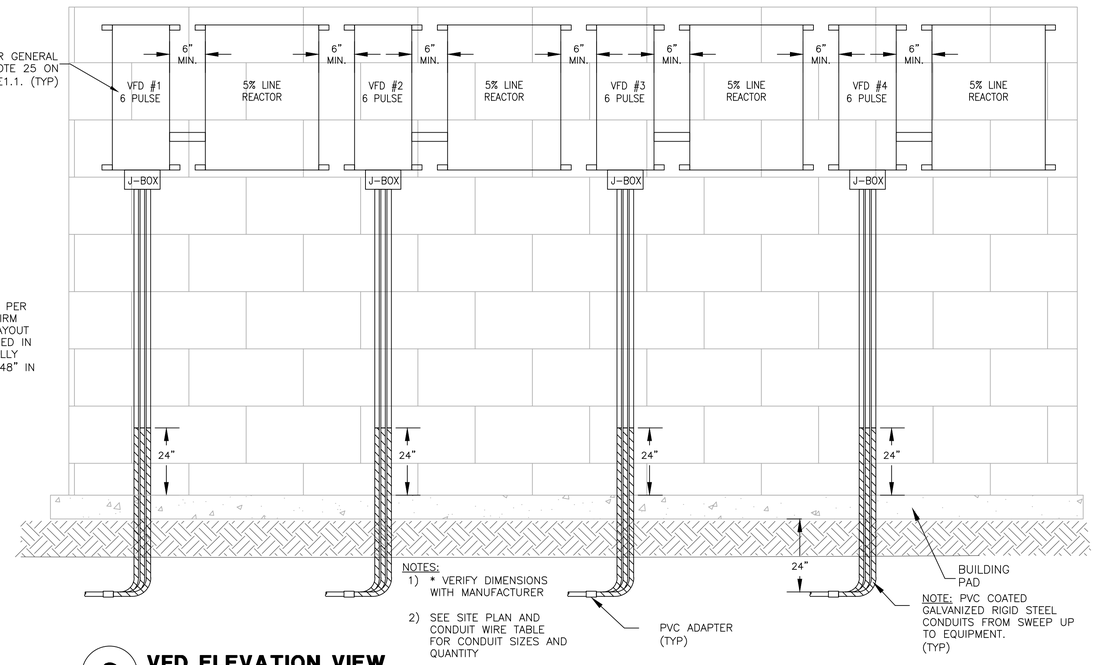

3 VFD ELEVATION VIEW
NOT TO SCALE

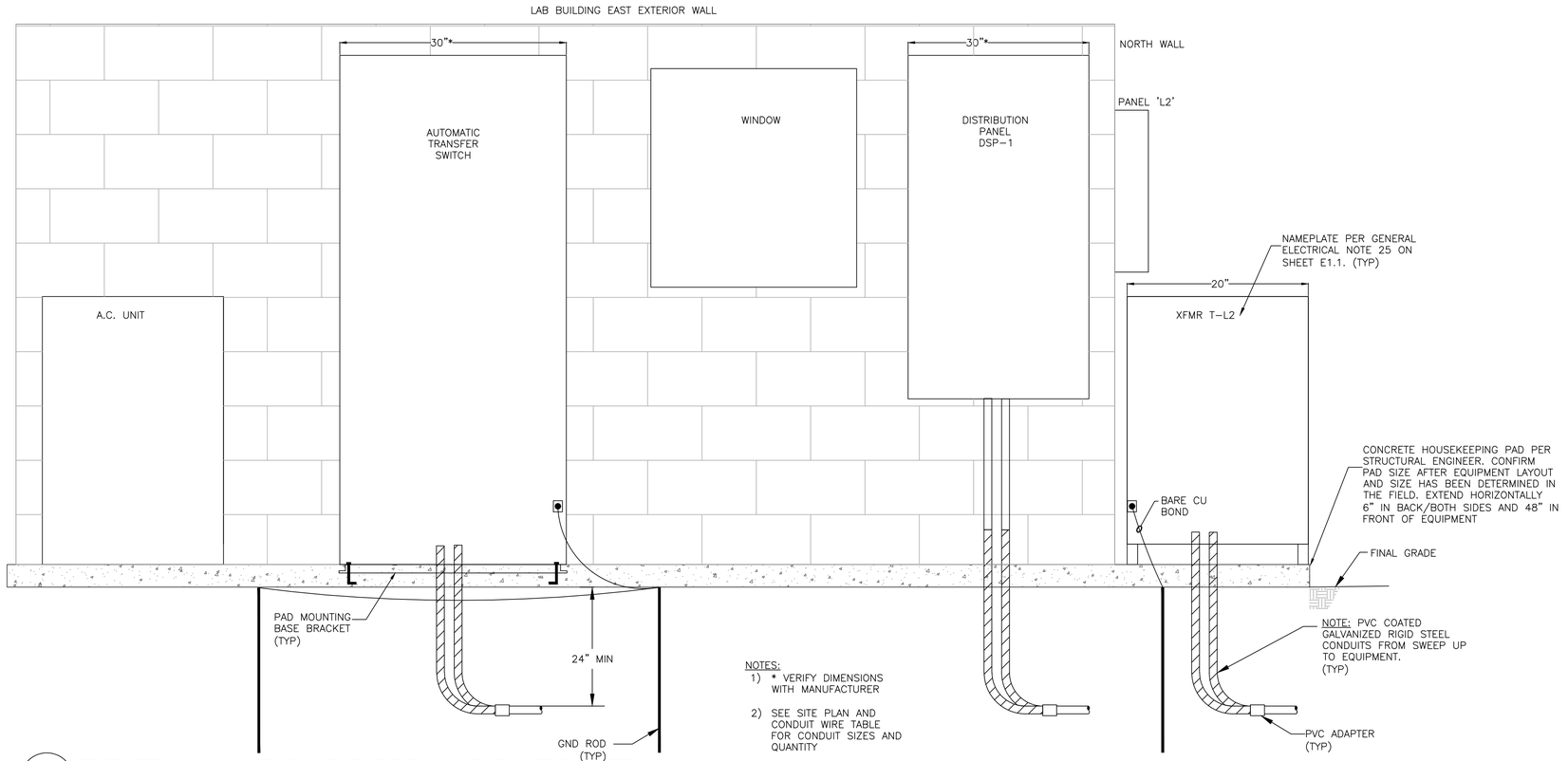

2 ELECTRICAL PANELS AT BUILDING - ELEVATION DETAIL
NO SCALE

WRIGHT engineering corporation
ELECTRICAL ENGINEERING AND DESIGN
165 EAST CHILTON DRIVE
CHANDLER, ARIZONA 85225
PHONE: 480.497.5829
FAX: 480.497.5807
www.wrightengineering.us
Wright Project # 23319

CALL TWO WORKING DAYS BEFORE YOU DIG
602-263-1100
1-800-STAKE-IT
(OUTSIDE MARICOPA COUNTY)

NO	BY	DATE	REVISIONS	DATE	APP.

Registered Professional Engineer (Electrical) Certificate No. 73954 JASON BILLEDT 09-30-24 Expires 9-30-27

PREPARED BY: WRIGHT ENGINEERING
DESIGNED BY: JHB
DRAWN BY: XAG
CHECKED BY: JHB
SCALE: AS NOTED
DATE: NOV 2025
JOB NO. B614

THESE DRAWINGS ARE THE PROPERTY OF P.A.C.E. AND SHALL NOT BE REPRODUCED IN ANY MANNER NOR BE USED FOR CONSTRUCTION UNLESS STAMPED "ISSUED FOR CONSTRUCTION".

TITLE: ELECTRICAL DETAILS I

JOB: TOWN OF JEROME WASTEWATER TREATMENT PLANT
YAVAPAI CO. AZ

PREPARED BY:
PACE
Advanced Water Engineering
8721 E. Via de Commercio, Suite 104 | Scottsdale, CA 85258
P: (408) 991-3595 | www.pacewater.com

ISSUED FOR BID

SHEET
E4.1
84 OF 99 SHEETS

JOB NO. B614

I:\2025\2519-Jerome WWTP\2025 ES Dwg - Tab E4.1 by jacob on 11/24/25 at 8:56:49 PM

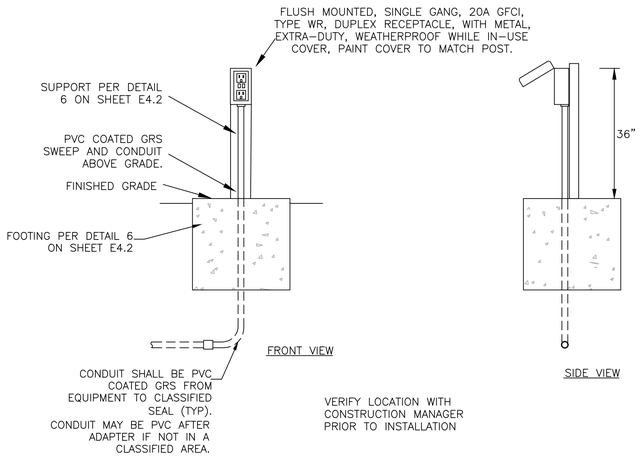

1 RECEPTACLE PEDESTAL DETAIL

NO SCALE

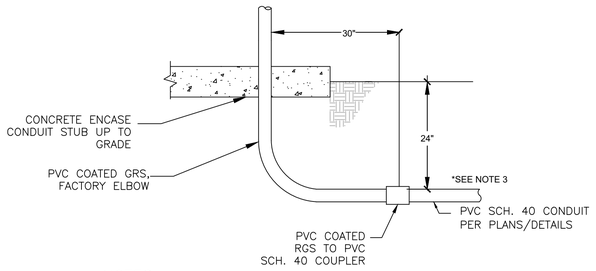

NOTES:
1. ALL DIMENSIONS SHOWN ARE MINIMUM.
2. PROVIDE 6 INCH COVER OF CONCRETE WITHIN 2 FEET OF ALL DRIVABLE AREAS PER DETAILS AND PLAN.
3. CONDUITS THROUGH CLASSIFIED AREA SHALL BE PVC COATED RGS UNDERGROUND

2 TYPICAL CONDUIT STUB UP DETAIL

NO SCALE

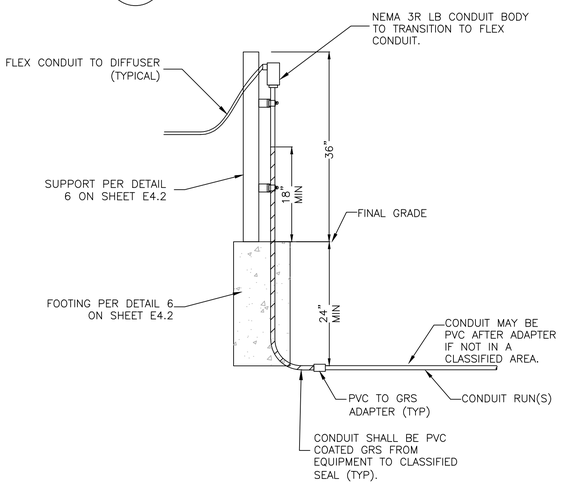

3 CONDUIT TO EQUIPMENT SUPPORT DETAIL

NO SCALE

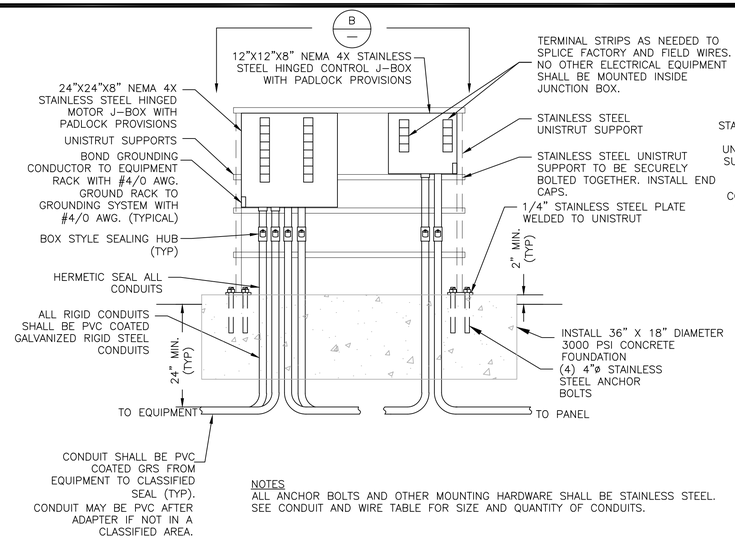

NOTES
ALL ANCHOR BOLTS AND OTHER MOUNTING HARDWARE SHALL BE STAINLESS STEEL.
SEE CONDUIT AND WIRE TABLE FOR SIZE AND QUANTITY OF CONDUITS.

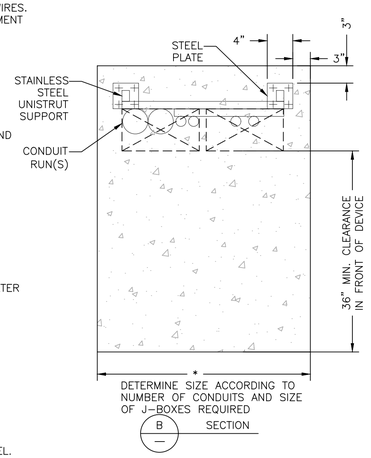

NOTES:
1) A 36" MIN. CLEARANCE SHALL BE MAINTAINED IN FRONT OF ALL ELECTRICAL DEVICES.

2) ALL EXPOSED CONDUITS SHALL BE GALVANIZED RIGID STEEL TO BELOW GRADE PAST 90° BEND TO PVC/GRS ADAPTER UNLESS OTHERWISE NOTED ON PLANS. WRAP PER GENERAL NOTE 11 ON SHEET E1.1.

3) ALL JUNCTION BOXES SHALL BE NEMA-4X STAINLESS STEEL UNLESS OTHERWISE NOTED ON PLANS.

4) ALL BARE STEEL COMPONENTS SHALL BE PRIMED AND PAINTED TAN TO MATCH SURROUNDING EQUIPMENT.

5) SEE RESPECTIVE SITE PLAN FOR CONDUIT SIZE AND QUANTITY DESIGNATIONS.

6)CONTRACTOR SHALL MAINTAIN AN 18" AIR GAP FOR CONDUIT RUN COMING FROM WET WELL. AIR GAP SHALL BE LOCATED AT THE JUNCTION BOX. CONTRACTOR SHALL INSTALL HERMETIC SEALS AT THE END OF THE THE CONDUIT RUNS INTO VAULT WALL TO PREVENT MOISTURE FROM ENTERING CONDUIT. CONDUIT SHALL BE CONTINUOUS GRS FROM WET WELL TO AIR GAP.

4 STANCHION MOUNTED JUNCTION BOX

NO SCALE

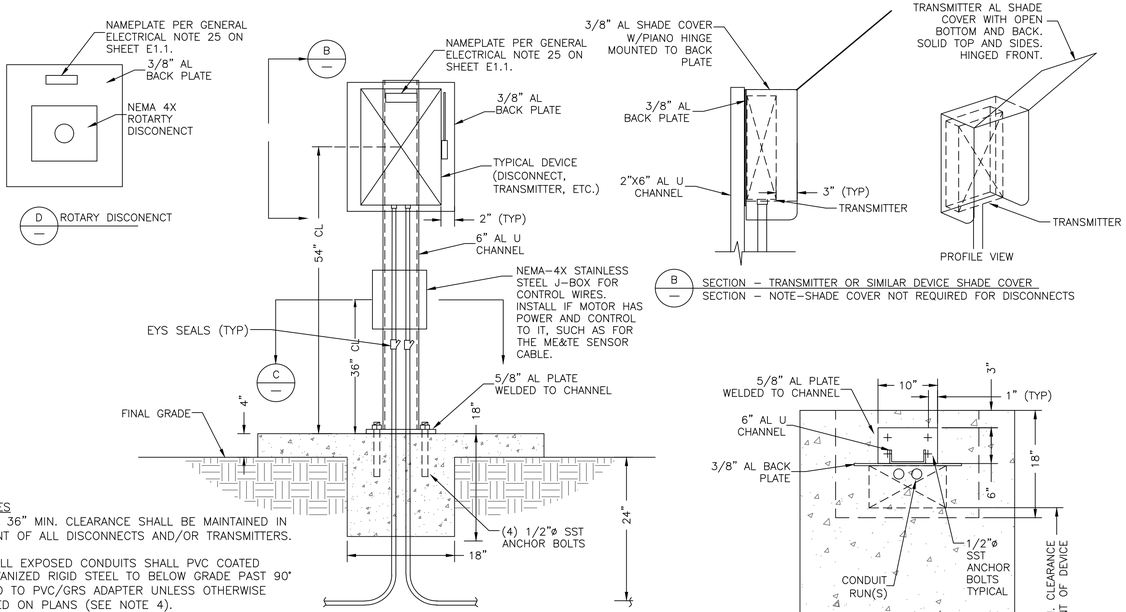

NOTES
1) A 36" MIN. CLEARANCE SHALL BE MAINTAINED IN FRONT OF ALL DISCONNECTS AND/OR TRANSMITTERS.

2) ALL EXPOSED CONDUITS SHALL PVC COATED GALVANIZED RIGID STEEL TO BELOW GRADE PAST 90° BEND TO PVC/GRS ADAPTER UNLESS OTHERWISE NOTED ON PLANS (SEE NOTE 4).

3) ALL DISCONNECTS SHALL BE NEMA-4X STAINLESS STEEL UNLESS OTHERWISE NOTED ON PLANS.

4)CONTRACTOR SHALL MAINTAIN 18" AIR GAP ON CONDUIT RUN COMING FROM WET WELL. AIR GAP SHALL BE LOCATED AT THE JUNCTION BOX. AIR GAP SHALL CONFORM TO THE NATIONAL ELECTRICAL CODE FOR CLASS 1, DIVISION 1 HAZARDOUS AREA. CONTRACTOR SHALL INSTALL HERMETIC SEALS AT THE END OF THE THE CONDUIT RUNS INTO VAULT WALL TO PREVENT MOISTURE FROM ENTERING CONDUIT. CONDUIT SHALL BE CONTINUOUS GRS FROM WET WELL TO 18" AIR GAP.

5 DISCONNECT/CONTROL NEMA 4X J-BOX DETAIL

NO SCALE

WRIGHT engineering corporation
ELECTRICAL ENGINEERING AND DESIGN
165 EAST CHILTON DRIVE
CHANDLER, ARIZONA 85225
PHONE: 480.497.5829
FAX: 480.497.5807
www.wrightengineering.us
Wright Project # 23319

CALL TWO WORKING DAYS BEFORE YOU DIG
602-263-1100
1-800-STAKE-IT
(OUTSIDE MARICOPA COUNTY)

NO	BY	DATE	REVISIONS	DATE	APP.

Registered Professional Engineer (Electrical) Certificate No. 73954 JASON BILLESDON Date Signed 9-30-25 Expires 9-30-27

PREPARED BY: WRIGHT ENGINEERING
DESIGNED BY: JHB
DRAWN BY: XAG
CHECKED BY: JHB
SCALE: AS NOTED
DATE: NOV 2025
JOB NO. B614

THESE DRAWINGS ARE THE PROPERTY OF P.A.C.E. AND SHALL NOT BE REPRODUCED IN ANY MANNER NOR BE USED FOR CONSTRUCTION UNLESS STAMPED "ISSUED FOR CONSTRUCTION".

TITLE: ELECTRICAL DETAILS II

JOB: TOWN OF JEROME WASTEWATER TREATMENT PLANT YAVAPAI CO. AZ

ISSUED FOR BID

PREPARED BY:
PACE
Advanced Water Engineering
8723 E. Via de Ventura, Suite 100, SCOTTSDALE, CA 85258
P: (480) 991-3955 | www.pacewater.com

SHEET E4.2
85 OF 99 SHEETS

JOB NO. B614

I:\2025\25-jerome WWTP\25-015 E4.2 - Tab E4.2 - Detail.dwg, Tab: E4.2 - by jacob on 11/24/25 at 3:56:10 PM

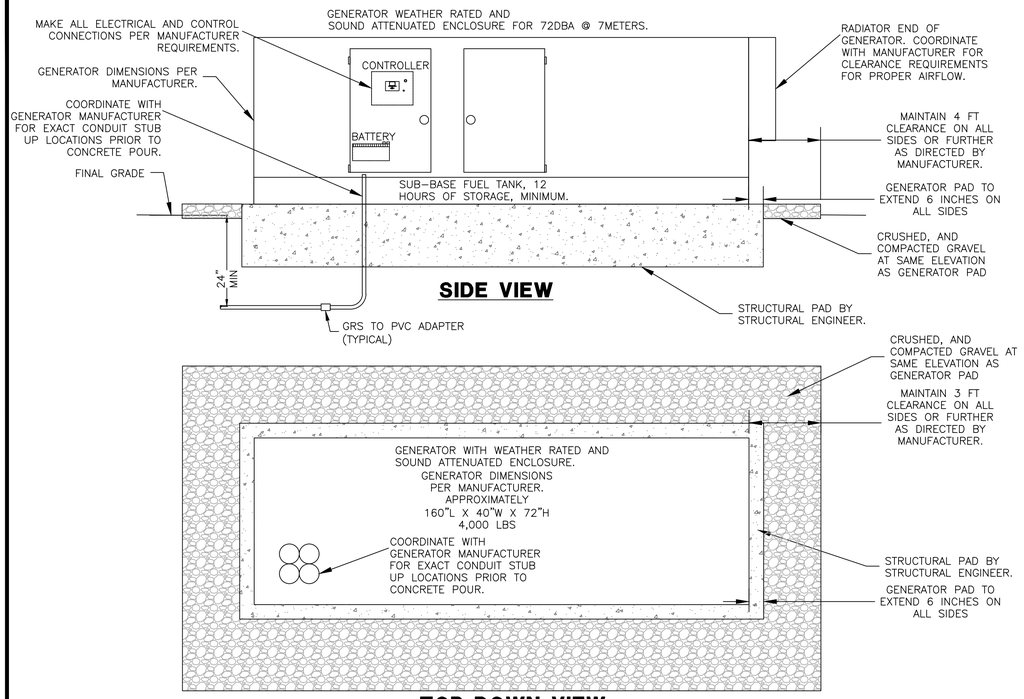

1 GENERATOR INSTALLATION DETAIL

NO SCALE

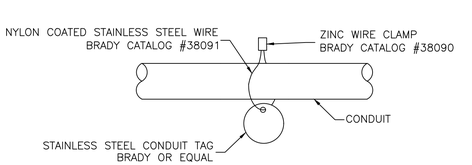

2 CONDUIT TAG DETAIL

NO SCALE

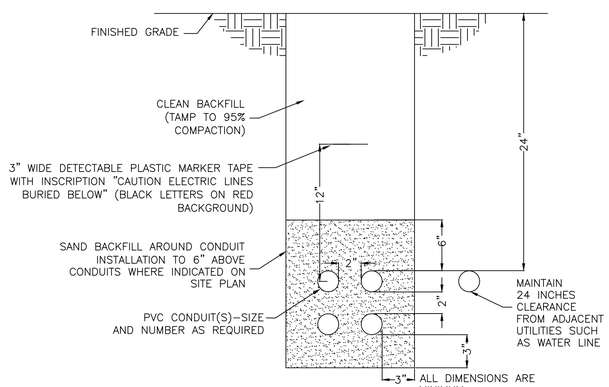

NOTE:

1) THIS CONDUIT DUCT BANK DETAIL SHALL BE REFERENCED FOR ALL UNDER GROUND CONDUIT INSTALLATIONS.

2) INSTALL CONDUIT SPACERS EVERY 6 FT. MAX., CARLON OR EQUAL.

3 CONDUIT DUCT BANK INSTALLATION DETAIL

NO SCALE

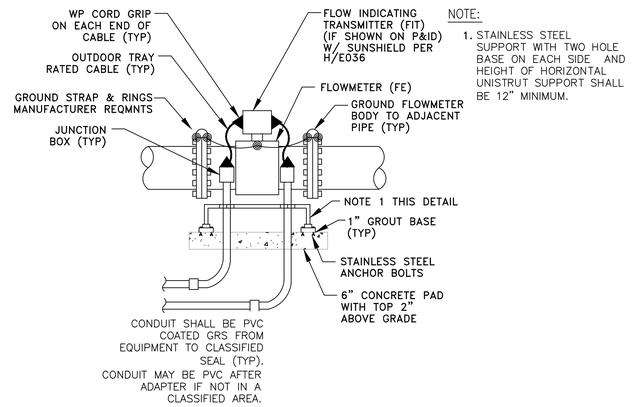

NOTE:

1. STAINLESS STEEL SUPPORT WITH TWO HOLE BASE ON EACH SIDE AND HEIGHT OF HORIZONTAL UNISTRUT SUPPORT SHALL BE 12" MINIMUM.

4 FLOWMETER DETAIL

NO SCALE

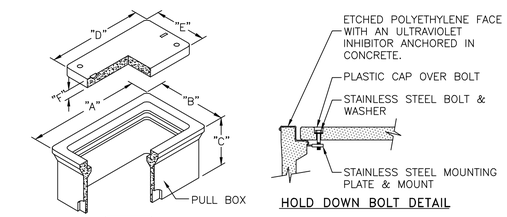

HOLD DOWN BOLT DETAIL

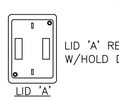

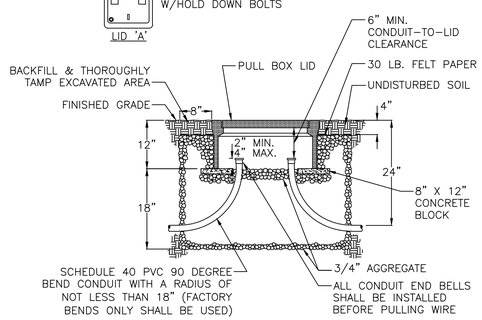

5 PULL BOX INSTALLATION DETAIL

NO SCALE

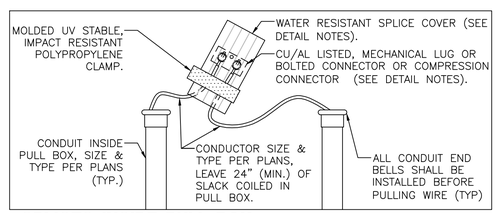

SPLICES INSIDE PULL BOX

DETAIL NOTES:

1. THE PULL BOX SHALL BE MADE OF A HIGH DENSITY REINFORCED CONCRETE MATERIAL WITH END & SIDE KNOCKOUTS, & NON-SETTLING SHOULDERS TO MAINTAIN GRADE, MANUFACTURED WITH APPROXIMATE DIMENSIONS AS SHOWN.
2. STEEL REINFORCEMENT SHALL BE AS REGULARLY USED IN STANDARD PRODUCTS OF THE RESPECTIVE MANUFACTURER.
3. COVER LETTERING SHALL BE 1" LETTERS CAST IN STANDARD MARKINGS: "ELECTRIC" OR "HIGH VOLTAGE" OR "COMMUNICATIONS". AS REQUIRED.
4. THE PULL BOX SHALL HAVE AN ETCHED POLYETHYLENE FACE WITH AN ULTRAVIOLET INHIBITOR ANCHORED IN CONCRETE.
5. ALL CABLE & CONDUCTOR SPLICES MADE USING CU/AL LISTED, MECHANICAL LUG OR BOLTED CONNECTOR OR COMPRESSION CONNECTOR, (TYCO ELECTRONICS, NSI INDUSTRIES, ILSCO OR APPROVED EQUAL). CONNECTION TO BE INSULATED & MADE WATER RESISTANT WITH TYCO ELECTRONICS GELCAP-SL, NSI INDUSTRIES ESSLK-2/0 OR 3M SCOTCHCAST SPLICE KIT 85 SERIES.

DATA TABLE

PULLBOX TYPE	PULLBOX LENGTH	PULLBOX WIDTH	PULLBOX HEIGHT	LID LENGTH	LID WIDTH	LID HEIGHT
	"A"	"B"	"C"	"D"	"E"	"F"
#3-1/2	19-3/4"	14-1/4"	12"	15-1/2"	10"	1-3/4"
#5	25-1/8"	15-5/8"	12"	20-3/4"	10-5/8"	2"
#7	35"	22"	12"	30-1/2"	17-1/2"	2"
#9	40-1/2"	28-1/4"	18"	35-1/2"	24"	3"

WRIGHT engineering corporation
ELECTRICAL ENGINEERING AND DESIGN
165 EAST CHILTON DRIVE
CHANDLER, ARIZONA 85225
PHONE: 480.497.5829
FAX: 480.497.5807
www.wrightengineering.us
Wright Project # 23319

CALL TWO WORKING DAYS BEFORE YOU DIG
602-263-1100
1-800-STAKE-IT
(OUTSIDE MARICOPA COUNTY)

NO	BY	DATE	REVISIONS	DATE	APP.

Registered Professional Engineer (Electrical) Certificate No. 73954 JASON BILLEDT 04-24-27 Expires 6-30-27

PREPARED BY: WRIGHT ENGINEERING
DESIGNED BY: JHB
DRAWN BY: XAG
CHECKED BY: JHB
SCALE: AS NOTED
DATE: NOV 2025
JOB NO. B614

TITLE: ELECTRICAL DETAILS III

JOB: TOWN OF JEROME WASTEWATER TREATMENT PLANT YAVAPAI CO. AZ

PREPARED BY: PACE Advanced Water Engineering
8123 E. VIA DE COMERCIO, BUILDING 3, SCOTTSDALE, CA 85258
P: (480) 991-3555 | www.pacewater.com

ISSUED FOR BID

SHEET E4.3
86 OF 99 SHEETS

JOB NO. B614

THESE DRAWINGS ARE THE PROPERTY OF P.A.C.E. AND SHALL NOT BE REPRODUCED IN ANY MANNER NOR BE USED FOR CONSTRUCTION UNLESS STAMPED "ISSUED FOR CONSTRUCTION".

N:\2025\25-Homes\WWTP\E4.3.dwg, 11x17, 1:1, 11/25/2025 at 10:45:47 PM

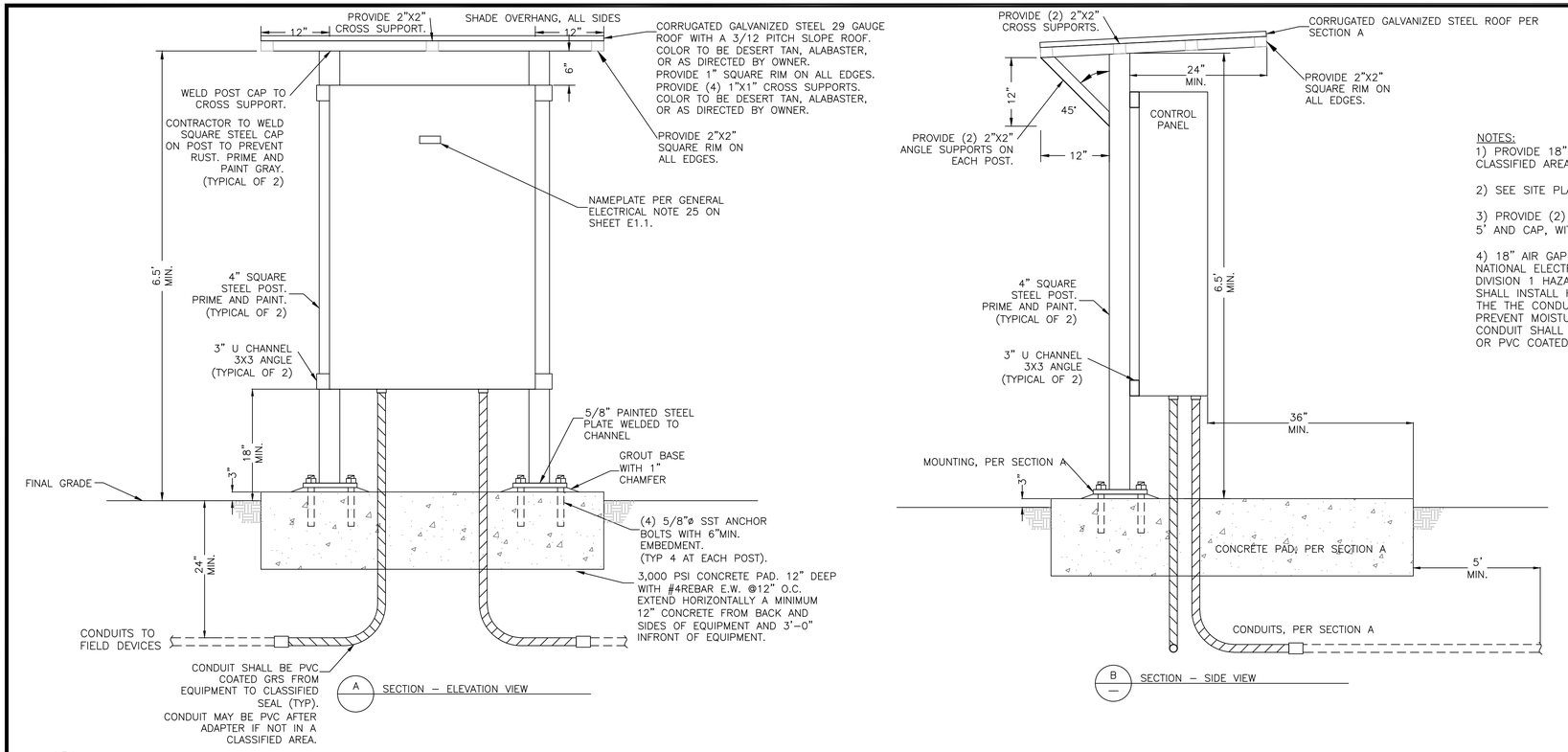

NOTES:
1) PROVIDE 18" AIR GAP WHEN CONDUITS ENTER CLASSIFIED AREAS.

2) SEE SITE PLAN FOR QUANTITY OF CONDUITS.

3) PROVIDE (2) 1.5" SPARE CONDUITS, EXTEND 5' AND CAP, WITH DETECTABLE PULL ROPE.

4) 18" AIR GAP SHALL CONFORM TO THE NATIONAL ELECTRICAL CODE FOR CLASS 1, DIVISION 1 HAZARDOUS AREA. CONTRACTOR SHALL INSTALL HERMETIC SEALS AT THE END OF THE THE CONDUIT RUNS INTO VAULT WALL TO PREVENT MOISTURE FROM ENTERING CONDUIT. CONDUIT SHALL BE CONTINUOUS GRS WRAPPED OR PVC COATED FROM WET WELL TO AIR GAP.

1 FREESTANDING CONTROL PANEL

NO SCALE

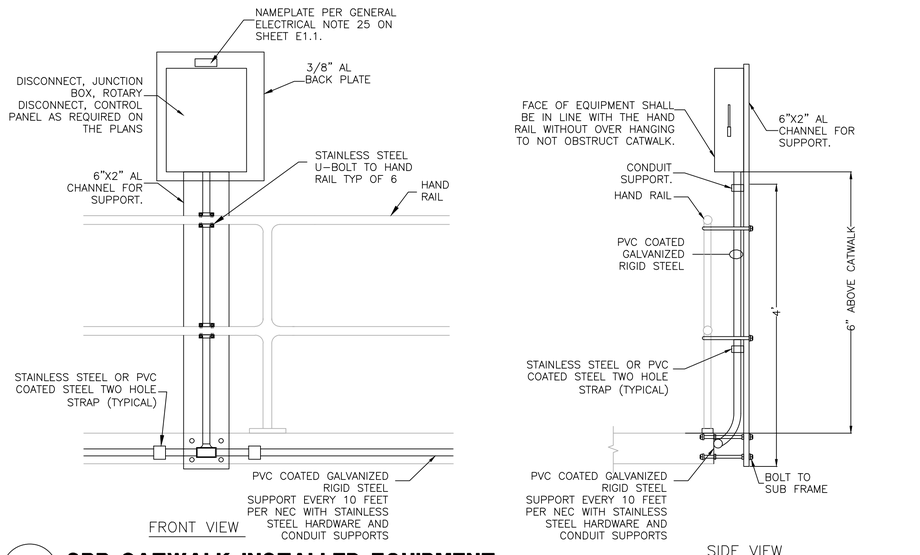

2 SBR CATWALK INSTALLED EQUIPMENT

NO SCALE

WRIGHT engineering corporation
ELECTRICAL ENGINEERING AND DESIGN
165 EAST CHILTON DRIVE
CHANDLER, ARIZONA 85225
PHONE: 480.497.5829
FAX: 480.497.5807
www.wrightengineering.us
Wright Project # 23319

CALL TWO WORKING DAYS BEFORE YOU DIG
602-263-1100
1-800-STAKE-IT
(OUTSIDE MARICOPA COUNTY)

NO	BY	DATE	REVISIONS	DATE	APP.

Registered Professional Engineer (Electrical) Certificate No. 73954 JASON RILEY LOTT Date Signed 9-30-25 Expires 9-30-27

PREPARED BY: WRIGHT ENGINEERING
DESIGNED BY: JHB
DRAWN BY: XAG
CHECKED BY: JHB
SCALE: AS NOTED
DATE: NOV 2025
JOB NO. B614

TITLE: ELECTRICAL DETAILS IV

JOB: TOWN OF JEROME WASTEWATER TREATMENT PLANT
YAVAPAI CO. AZ

PREPARED BY:
PACE
Advanced Water Engineering
8712 E. Via de Commercio, Suite 3A, Scottsdale, CA 85258
P: (480) 991-3595 | www.pacewater.com

ISSUED FOR BID

SHEET
E4.4
87 OF 99 SHEETS

JOB NO. B614

THESE DRAWINGS ARE THE PROPERTY OF P.A.C.E. AND SHALL NOT BE REPRODUCED IN any MANNER NOR BE USED FOR CONSTRUCTION UNLESS STAMPED "ISSUED FOR CONSTRUCTION".

H:\2025\2519-Jerome WWTP\2519-Elec Fac E4.4 - Hy pvdbl on 11/04/25 at 10:56 PM

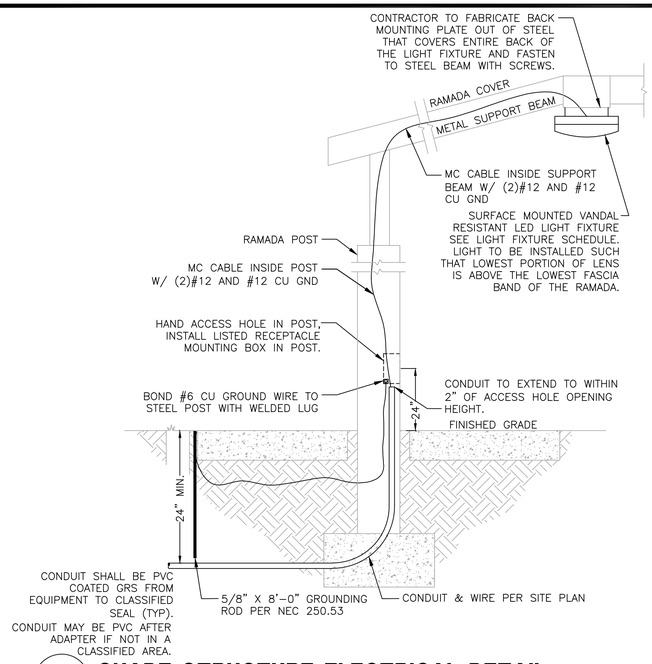

1 SHADE STRUCTURE ELECTRICAL DETAIL

NO SCALE

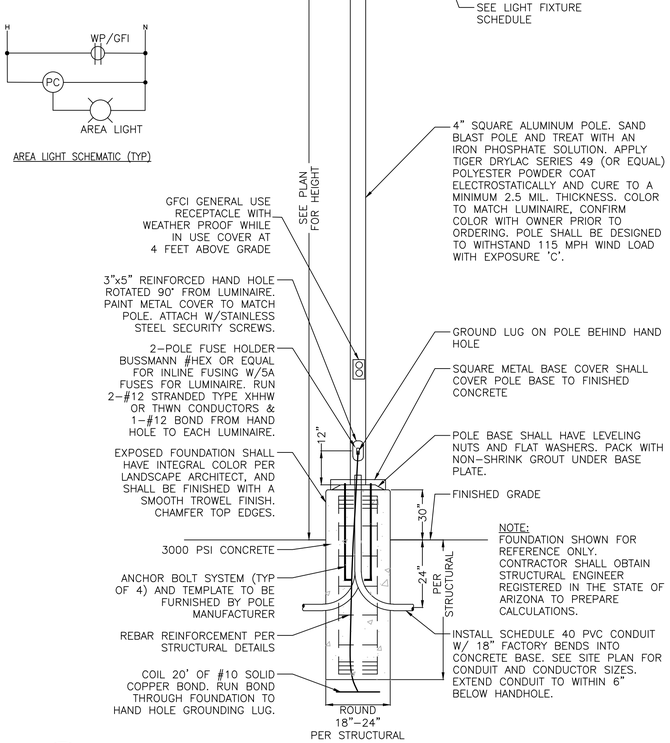

2 AREA LIGHT DETAIL

NO SCALE

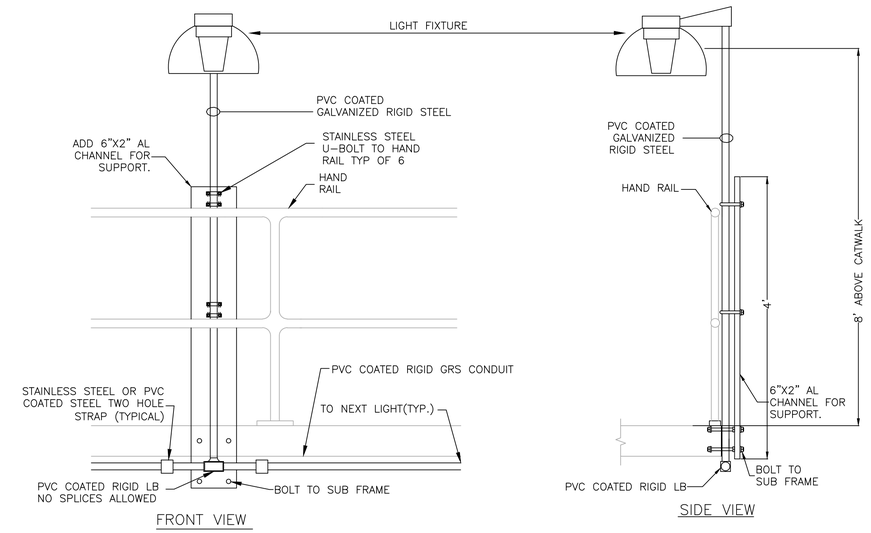

3 SBR LIGHT DETAIL

NO SCALE

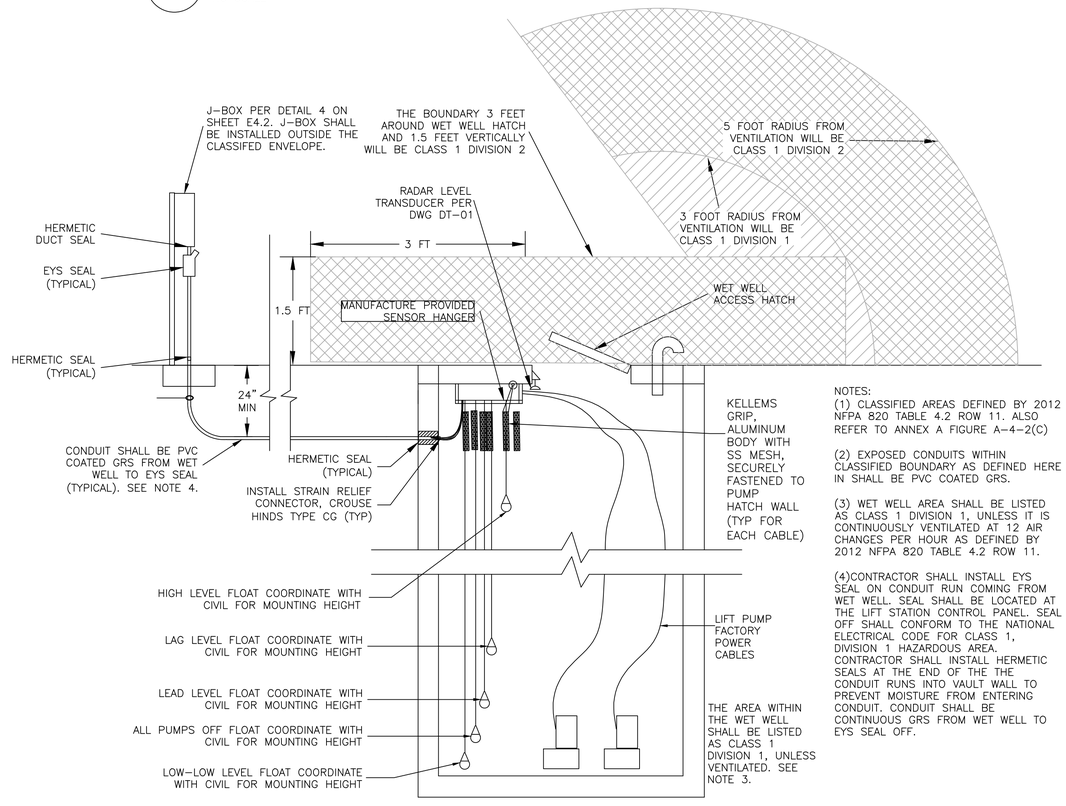

NOTES:
(1) CLASSIFIED AREAS DEFINED BY 2012 NFPA 820 TABLE 4.2 ROW 11. ALSO REFER TO ANNEX A FIGURE A-4-2(C)

(2) EXPOSED CONDUITS WITHIN CLASSIFIED BOUNDARY AS DEFINED HERE IN SHALL BE PVC COATED GRS.

(3) WET WELL AREA SHALL BE LISTED AS CLASS 1 DIVISION 1, UNLESS IT IS CONTINUOUSLY VENTILATED AT 12 AIR CHANGES PER HOUR AS DEFINED BY 2012 NFPA 820 TABLE 4.2 ROW 11.

(4)CONTRACTOR SHALL INSTALL EYS SEAL ON CONDUIT RUN COMING FROM WET WELL. SEAL SHALL BE LOCATED AT THE LIFT STATION CONTROL PANEL. SEAL OFF SHALL CONFORM TO THE NATIONAL ELECTRICAL CODE FOR CLASS 1, DIVISION 1 HAZARDOUS AREA. CONTRACTOR SHALL INSTALL HERMETIC SEALS AT THE END OF THE THE CONDUIT RUNS INTO VAULT WALL TO PREVENT MOISTURE FROM ENTERING CONDUIT. CONDUIT SHALL BE CONTINUOUS GRS FROM WET WELL TO EYS SEAL OFF.

4 LIFT STATION DETAIL

NO SCALE

NOTE
LEVEL CONTROLS SHOWN FOR REFERENCE ONLY, MOUNT LEVEL CONTROLS PER CIVIIL/MECHANICAL DRAWINGS.

WRIGHT engineering corporation
ELECTRICAL ENGINEERING AND DESIGN
165 EAST CHILTON DRIVE
CHANDLER, ARIZONA 85225
PHONE: 480.497.5829
FAX: 480.497.5807
www.wrightengineering.us
Wright Project # 23319

CALL TWO WORKING DAYS BEFORE YOU DIG
602-263-1100
1-800-STAKE-IT
(OUTSIDE MARICOPA COUNTY)

NO	BY	DATE	REVISIONS	DATE	APP.

Registered Professional Engineer (Electrical) Certificate No. 73954 JAMES BELLEDIT 3-24-25 Expires 9-30-27

PREPARED BY: WRIGHT ENGINEERING
DESIGNED BY: JHB
DRAWN BY: XAG
CHECKED BY: JHB
DATE: NOV 2025
JOB NO. B614
SCALE: AS NOTED

THESE DRAWINGS ARE THE PROPERTY OF P.A.C.E. AND SHALL NOT BE REPRODUCED IN ANY MANNER NOR BE USED FOR CONSTRUCTION UNLESS STAMPED "ISSUED FOR CONSTRUCTION".

TITLE
ELECTRICAL DETAILS V

JOB
TOWN OF JEROME
WASTEWATER TREATMENT PLANT
YAVAPAI CO. AZ

ISSUED FOR BID

PREPARED BY:
PACE
Advanced Water Engineering
8723 E. VIA DE COMERCIO, STE. 104, SCOTTSDALE, CA 85258
P. (480) 991-3595 | www.pacewater.com

SHEET
E4.5
88 OF 99 SHEETS

JOB NO. B614

K:\2025\2519-James WWTP\2519-E.dwg Tab: E4.5 by paceb on 11/04/25 at 8:49:40 PM

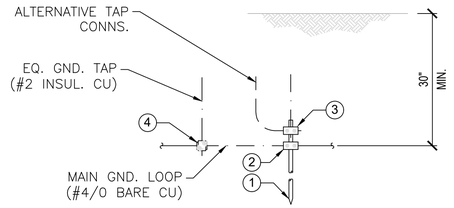

BILL OF MATERIALS		
NO.	DESCRIPTION	QTY
1	GROUND ROD, 3/4" DIA. x 10', COPPER-CLAD STEEL	1
2	GROUND ROD CONNECTOR (5/8"-3/4", 2/0 SOL-250) BURNDY #GAR6429 OR EQUAL.	1
3	GROUND ROD CONNECTOR (5/8"-3/4", #4 SOL-2/0) BURNDY #GAR6426 OR EQUAL.	1
4	GROUND CABLE CONNECTOR (#2/0-250 TO #4-#2/0) BURNDY #GX2926 OR EQUAL.	1

1 GROUND ROD INSTALLATION DETAIL
NO SCALE

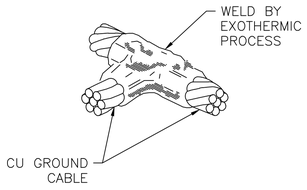

2 GROUND RING CONNECTION DETAIL
NO SCALE

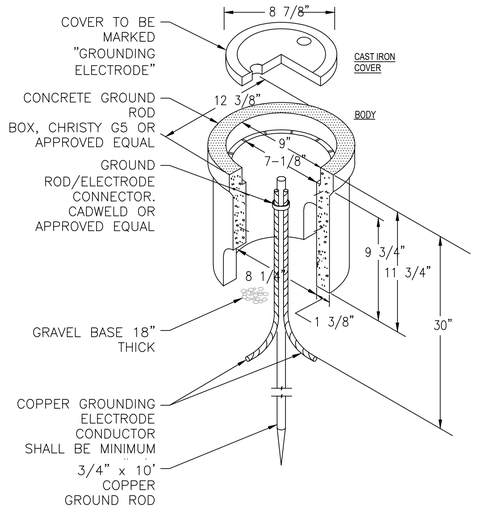

4 CONCRETE GROUND ROD INSPECTION DETAIL
NO SCALE

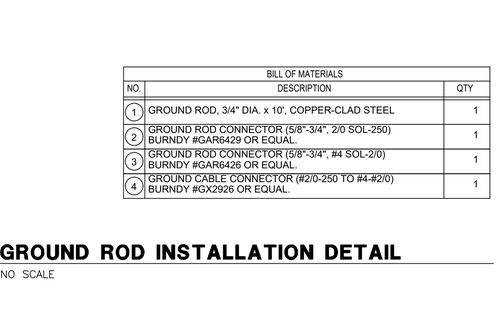

BILL OF MATERIALS		
NO.	DESCRIPTION	QTY
1	#4 RE-BAR, 1/2" DIA. – USE GND. CONN. BURNDY #GAR1126	1
2	#5 OR #6 RE-BAR, 5/8" OR 3/4" DIA. – USE GND. CONN. BURNDY #GAR6426	1
3	#7 OR #8 RE-BAR, 7/8" OR 1" DIA. – USE GND. CONN. BURNDY #GAR1426	1

3 GROUND ROD TO REBAR DETAIL
NO SCALE

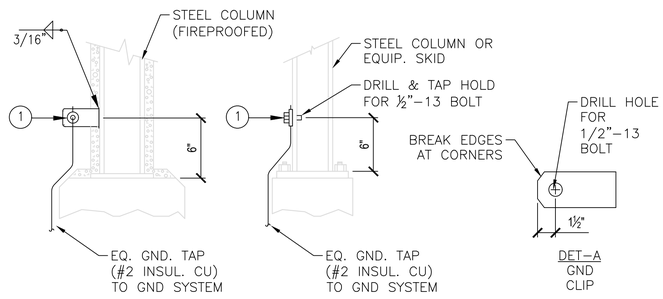

BILL OF MATERIALS		
NO.	DESCRIPTION	QTY
1	SERVIT POST CONNECTOR, 2/C, 1/2"–13 LONG STUD, #2–#2/0 W/ NUT & LOCKWASHER, BURNDY#K2C25B1	1
2	GROUND CLIP, MILD STEEL, 5" x 3" x 1/4" FIELD FABRICATE – SEE DET–A	1

5 GROUNDING CONNECTION - EQUIP/STEEL COLUMN
NO SCALE

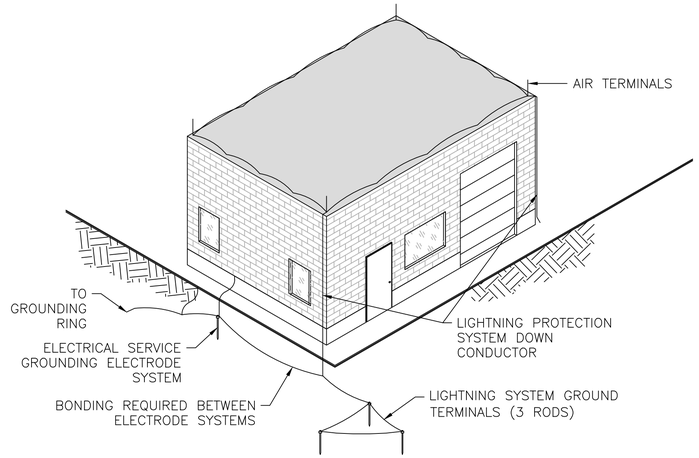

NOTES:
1. THE LIGHTNING ROD IS CONNECTED TO GROUND WITH AT LEAST TWO DOWN CONDUCTORS LOCATED ON OPPOSITE FACADES WHEREVER POSSIBLE.
2. THE DOWN CONDUCTORS MUST BE INSTALLED OUTSIDE THE BUILDING, AVOIDING THE PROXIMITY OF ELECTRICAL CABLES AND GAS. ITS PATH MUST BE AS STRAIGHT AS POSSIBLE, USING THE SHORTEST PATH TO EARTH, AVOIDING ANY SHARP BEND OR LIFT.
3. INSTALL IN ACCORDANCE WITH NFPA 780, NEC 250.60 AND NEC 250.106.
4. DETAIL SHOWN FOR REFERENCE ONLY.

6 LIGHTNING PROTECTION SYSTEM DETAIL
NO SCALE

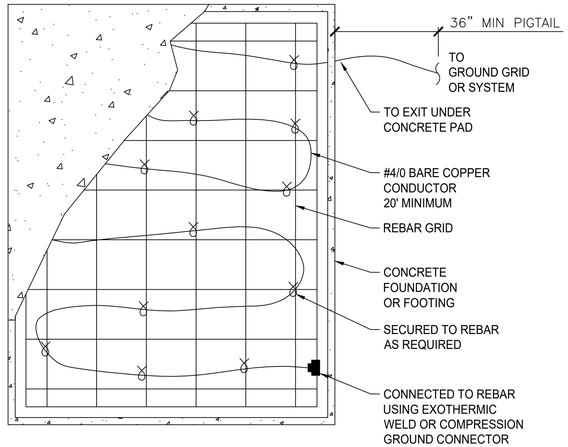

7 CONCRETE GROUNDING DETAIL
NO SCALE

WRIGHT engineering corporation
ELECTRICAL ENGINEERING AND DESIGN
165 EAST CHILTON DRIVE
CHANDLER, ARIZONA 85225
PHONE: 480.497.5829
FAX: 480.497.5807
www.wrightengineering.us
Wright Project # 23319

CALL TWO WORKING DAYS BEFORE YOU DIG
602-263-1100
1-800-STAKE-IT
(OUTSIDE MARICOPA COUNTY)

NO	BY	DATE	REVISIONS	DATE	APP.

Registered Professional Engineer (Electrical) Certificate No. 73954 JASON RILEY LOTT Date Signed 9-30-25 Expires 9-30-27

PREPARED BY: WRIGHT ENGINEERING
DESIGNED BY: JHB
DRAWN BY: XAG
CHECKED BY: JHB
SCALE: AS NOTED
DATE: NOV 2025
JOB NO. B614

TITLE: ELECTRICAL DETAILS VI

JOB: TOWN OF JEROME WASTEWATER TREATMENT PLANT YAVAPAI CO. AZ

PREPARED BY: PACE Advanced Water Engineering
8721 E. Via de Ventura, Suite 110, SCOTTSDALE, CA 85258
P: (480) 991-3595 | www.pacewater.com

ISSUED FOR BID

SHEET E4.6
89 OF 99 SHEETS

JOB NO. B614

THESE DRAWINGS ARE THE PROPERTY OF P.A.C.E. AND SHALL NOT BE REPRODUCED IN ANY MANNER NOR BE USED FOR CONSTRUCTION UNLESS STAMPED "ISSUED FOR CONSTRUCTION".

T:\2025\2519_Jerome WWTP\CAD\E4.6.dwg, Tab: E4.6, by jason on 11/04/25 at 3:56:31 PM

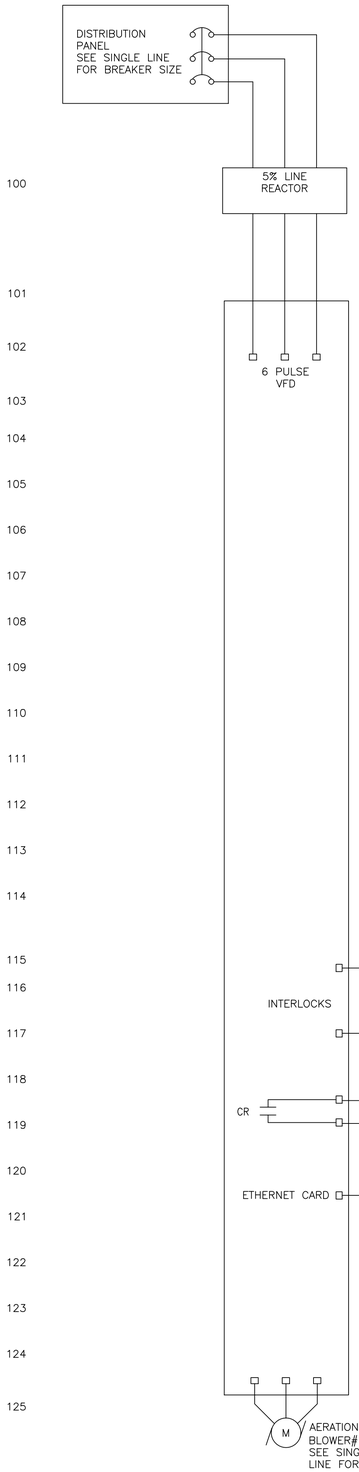

AERATION BLOWER #1 CONTROL SCHEMATIC

24VDC, 120VAC & 480VAC

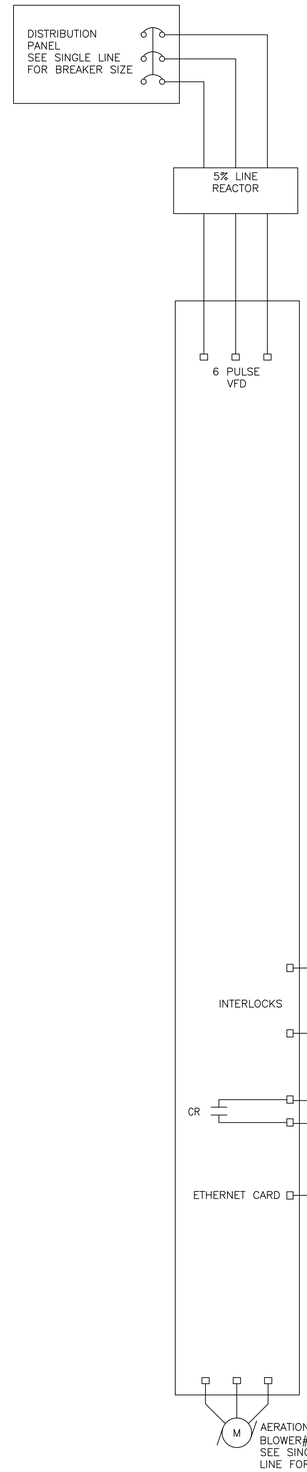

AERATION BLOWER #2 CONTROL SCHEMATIC

24VDC, 120VAC & 480VAC

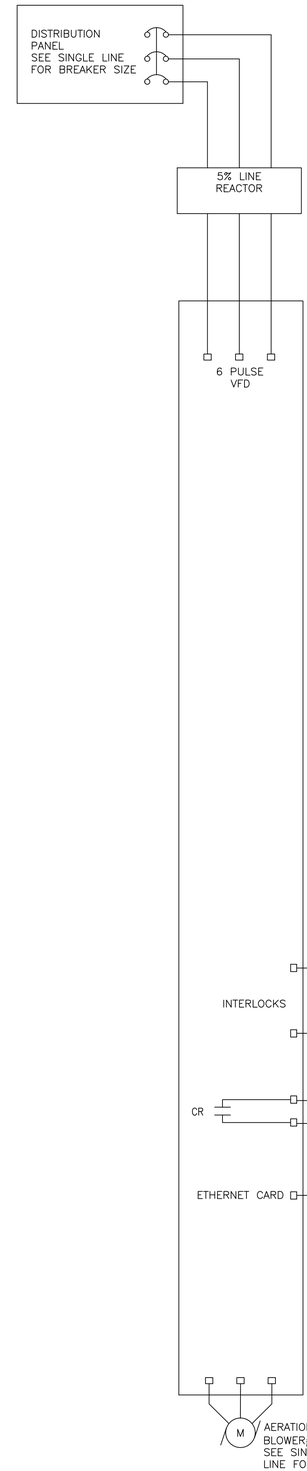

AERATION BLOWER #3 CONTROL SCHEMATIC

24VDC, 120VAC & 480VAC

WRIGHT engineering corporation
ELECTRICAL ENGINEERING AND DESIGN
165 EAST CHILTON DRIVE
CHANDLER, ARIZONA 85225
PHONE: 480.497.5829
FAX: 480.497.5807
www.wrightengineering.us
Wright Project # 23319

CALL TWO WORKING DAYS BEFORE YOU DIG
602-263-1100
1-800-STAKE-IT
(OUTSIDE MARICOPA COUNTY)

NO	BY	DATE	REVISIONS	DATE	APP.

Registered Professional Engineer (Electrical) Certificate No. 73954 JAMES RILLETT DYER Date Signed 9-30-25 Expires 9-30-27

PREPARED BY: WRIGHT ENGINEERING
DESIGNED BY: JHB
DRAWN BY: XAG
CHECKED BY: JHB
SCALE: AS NOTED
DATE: NOV 2025
JOB NO.: B614

THESE DRAWINGS ARE THE PROPERTY OF P.A.C.E. AND SHALL NOT BE REPRODUCED IN ANY MANNER NOR BE USED FOR CONSTRUCTION UNLESS STAMPED "ISSUED FOR CONSTRUCTION".

ISSUED FOR BID

TITLE: ELECTRICAL SCHEMATICS I

JOB: TOWN OF JEROME WASTEWATER TREATMENT PLANT YAVAPAI CO. AZ

PREPARED BY:
PACE
Advanced Water Engineering
8723 E. Via de Commercio, Suite A-104, Scottsdale, AZ 85258
P: (480) 991-3595 | www.pacewater.com

SHEET E5.1
90 OF 99 SHEETS

JOB NO. B614

I:\JOBS\2019\-Jerome WWTP\2019-E.dwg, 10/1/2025 9:41:11 AM, Jeff, 1:1

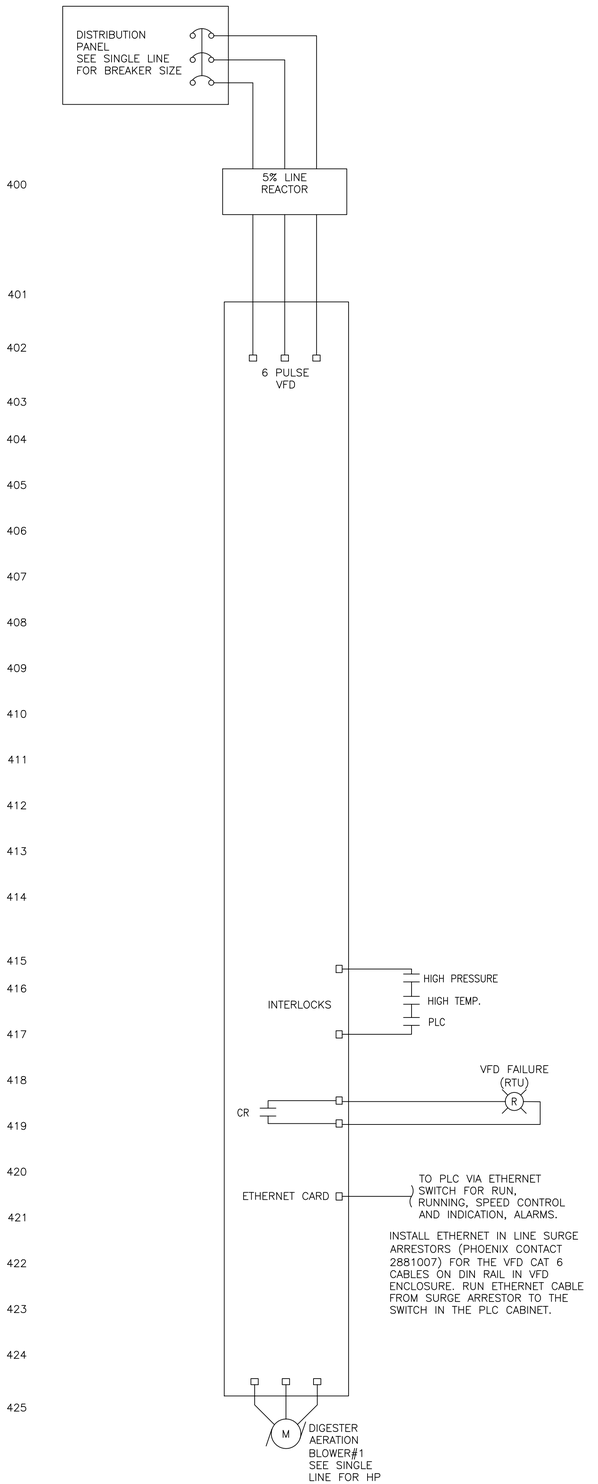

DIGESTER AERATION BLOWER #1 CONTROL SCHEMATIC

24VDC, 120VAC & 480VAC

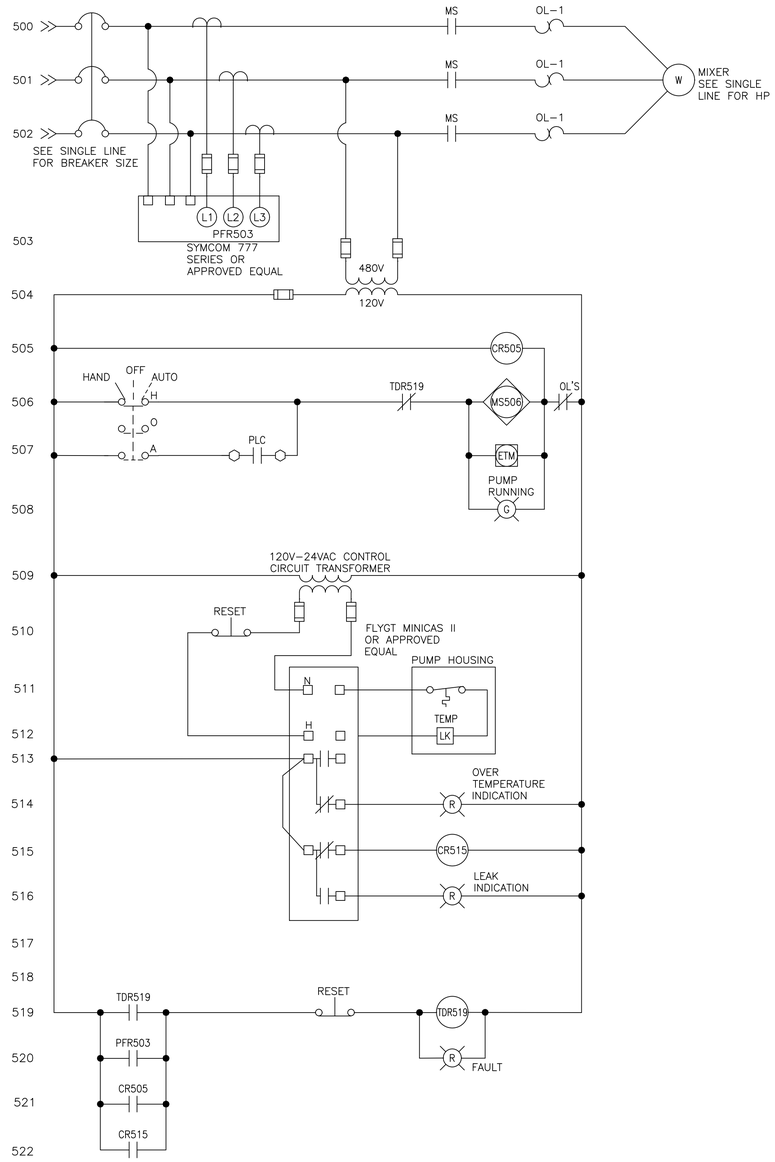

MIXER #1 CONTROL SCHEMATIC

120V

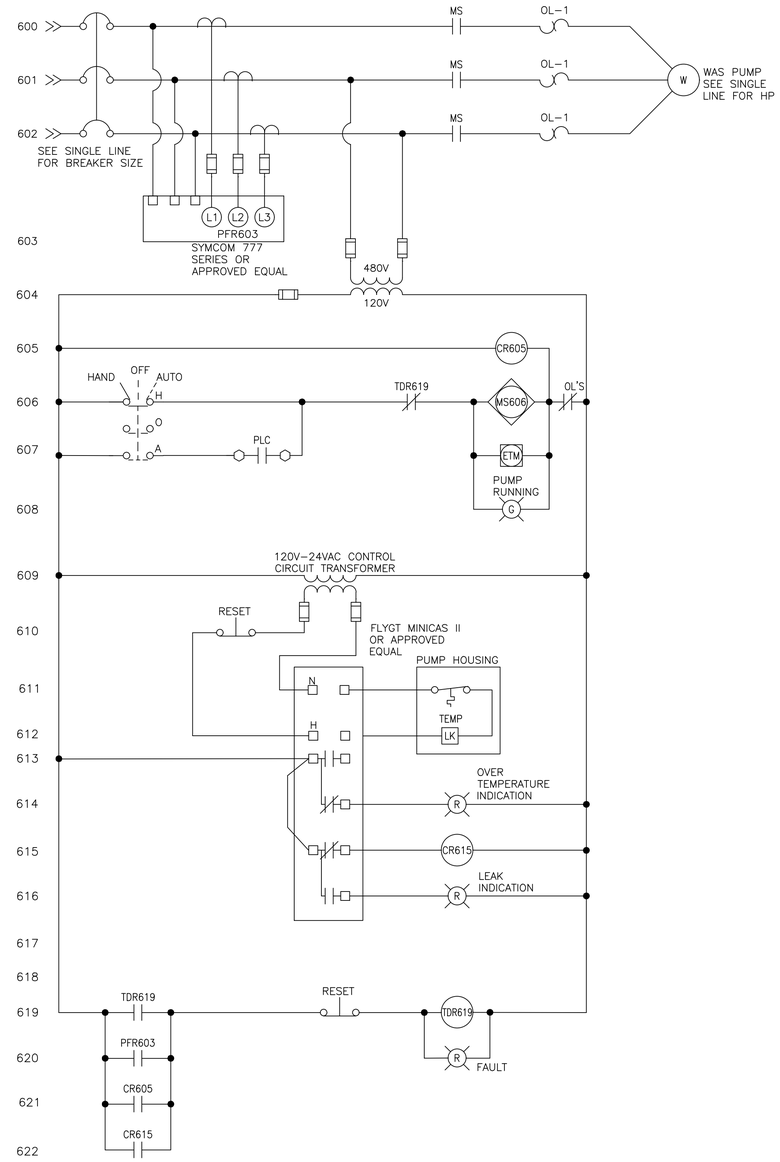

WAS PUMP #1 CONTROL SCHEMATIC

120V

NO	BY	DATE	REVISIONS	DATE	APP.

Registered Professional Engineer (Retired) Certificate No. 73954 JAMES BILLELIST ... Expires 9-30-27

PREPARED BY: WRIGHT ENGINEERING
DESIGNED BY: JHB
DRAWN BY: XAG
CHECKED BY: JHB
SCALE: AS NOTED
DATE: NOV 2025
JOB NO.: B614

THESE DRAWINGS ARE THE PROPERTY OF P.A.C.E. AND SHALL NOT BE REPRODUCED IN ANY MANNER NOR BE USED FOR CONSTRUCTION UNLESS STAMPED "ISSUED FOR CONSTRUCTION".

TITLE
ELECTRICAL SCHEMATICS II

JOB
TOWN OF JEROME
WASTEWATER
TREATMENT PLANT
YAVAPAI CO. AZ

ISSUED FOR BID

PREPARED BY:
PACE
Advanced Water Engineering
8723 E. VIA de COMERCIO, SUITE A, SCOTTSDALE, CA 85258
P. (480) 991-3595 | www.pacewater.com

SHEET
E5.2
91 OF 99 SHEETS

JOB NO. B614

WRIGHT engineering corporation
ELECTRICAL ENGINEERING AND DESIGN
165 EAST CHILTON DRIVE
CHANDLER, ARIZONA 85225
PHONE: 480.497.5829
FAX: 480.497.5807
www.wrightengineering.us
Wright Project # 23319

CALL TWO WORKING DAYS BEFORE YOU DIG
602-263-1100
1-800-STAKE-IT
(OUTSIDE MARICOPA COUNTY)

X:\2025\25-Current WWTP\25-E.dwg, Tab: E5.2, by jessie on 11/04/25 at 8:46:43 PM

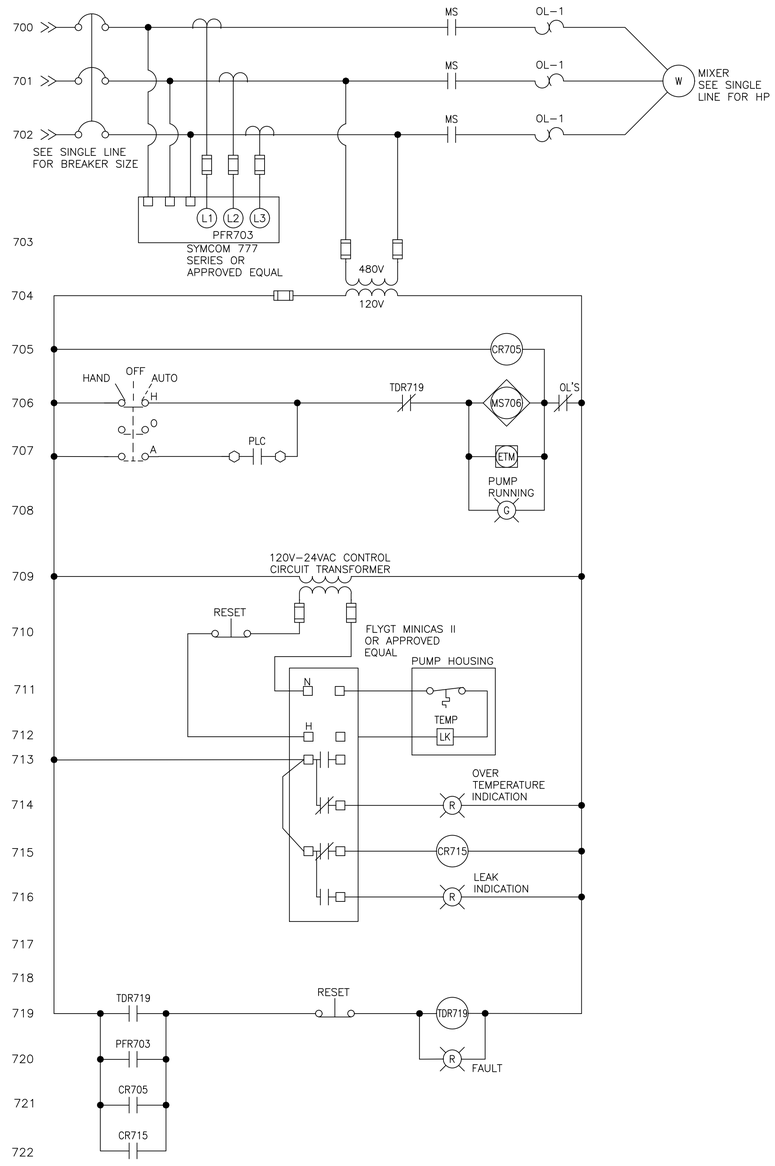

MIXER #2 CONTROL SCHEMATIC

120V

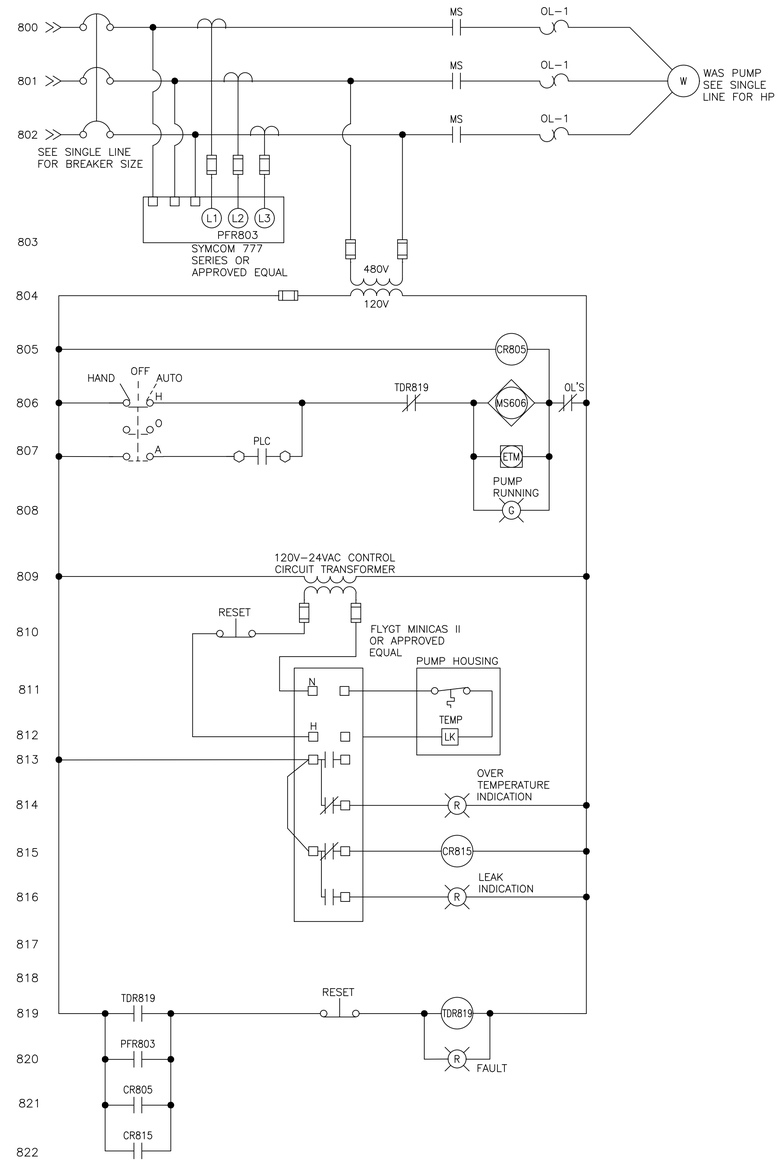

WAS PUMP #2 CONTROL SCHEMATIC

120V

NO	BY	DATE	REVISIONS	DATE	APP.

Registered Professional Engineer (Electrical)
Certificate No. 73954
JASON
BILLSTEDT
Date Signed 9-30-25
Expires 9-30-27

PREPARED BY: WRIGHT ENGINEERING
DESIGNED BY: JHB
DRAWN BY: XAG
CHECKED BY: JHB
DATE: NOV 2025
JOB NO.: B614
SCALE: AS NOTED

THESE DRAWINGS ARE THE PROPERTY OF P.A.C.E. AND SHALL NOT BE REPRODUCED IN ANY MANNER NOR BE USED FOR CONSTRUCTION UNLESS STAMPED "ISSUED FOR CONSTRUCTION".

TITLE
ELECTRICAL SCHEMATICS III

JOB
TOWN OF JEROME
WASTEWATER
TREATMENT PLANT
YAVAPAI CO. AZ

ISSUED FOR BID

PREPARED BY:
PACE
Advanced Water Engineering
8723 E. VIA DE COMMERCIO, 1ST FLOOR, SCOTTSDALE, CA 85258
P.: (408) 991-3595 | www.pacewater.com

SHEET
E5.3
92 OF 99 SHEETS

JOB NO. B614

WRIGHT engineering corporation
ELECTRICAL ENGINEERING AND DESIGN
165 EAST CHILTON DRIVE
CHANDLER, ARIZONA 85225
PHONE: 480.497.5829
FAX: 480.497.5807
www.wrightengineering.us
Wright Project # 23319

CALL TWO WORKING DAYS
BEFORE YOU DIG
602-263-1100
1-800-STAKE-IT
(OUTSIDE MARICOPA COUNTY)

X:\2025\25-Current WWTP\25-E.dwg, Tab: E5.3, by jason.xin 11/04/25 at 01:40 PM

INSTRUMENT IDENTIFICATION LETTERS (FSS)

	FIRST – LETTER (F)		SUCCEEDING – LETTERS (SS)		
	MEASURED OF INITIATING VARIABLE	MODIFIER	READOUT PASSIVE FUNCTION	OUTPUT FUNCTION	MODIFIER
A	ANALYSIS		ALARM		
B	BURNER, COMBUSTION		USER'S CHOICE	USER'S CHOICE	USER'S CHOICE
C	CONDUCTIVITY			CONTROLLER	
D	DENSITY	DIFFERENTIAL			
E	VOLTAGE		SENSOR, PRIMARY ELEMENT		
F	FLOW RATE	RATIO (FRACTION)			
G	GAUGE, GENERAL		GLASS VIEWING DEVICE		
H	HAND				HIGH, OPENED
I	CURRENT (ELEC.)		INDICATING, INDICATOR		
J	POWER		SCAN		
K	TIME, TIME SCHEDULE	TIME RATE OF CHANGE		CONTROL STATION	
L	LEVEL		LIGHT		LOW, CLOSED
M	MOISTURE, MOTION	MOMENTARY			MIDDLE
N	INTRUSION, STATUS	MOMENTARY	STATUS	USER'S CHOICE	USER'S CHOICE
O	OPERATOR, TORQUE		ORIFICE, RESTRICTION		USER'S CHOICE
P	PRESSURE, VACUUM		POINT (TEST) CONNECTION		
Q	QUANTITY	INTEGRATE, TOTALIZE			
R	RESET, RADIATION		RECORD OR PRINT		
S	SPEED, FREQUENCY	SAFETY		SWITCH	SLOW
T	TEMPERATURE			TRANSDUCER, TRANSMITTER	TEST
U	MULTIVARIABLE		MULTIFUNCTION	MULTIFUNCTION	MULTIFUNCTION
V	VIBRATION, MECH. ANALYSIS			VALVE, DAMPER LOUVER	
W	WEIGHT, FORCE		WELL		
X	SWITCH	X AXIS	UNCLASSIFIED	UNCLASSIFIED	UNCLASSIFIED
Y	EVENT, STATE, PRESENCE	Y AXIS	UNCLASSIFIED	RELAY, COMPUTE, CONVERT	
Z	POSITION DIMENSION	Z AXIS		DRIVER, ACTUATOR, UNCLASSIFIED FINAL CONTROL ELEMENT	

LINE NUMBERING

00" – INFLT – 001 (EXAMPLE)
- SEQUENTIAL LINE NO.
- FLUID CODE
- NOMINAL LINE SIZE

EQUIPMENT NUMBERING

F SS – PP T NN (EXAMPLE)
- ITEM NUMBER
- SERIES (TRAIN) LOCATION
- PROCESS LOCATION
- SUCCEEDING LETTERS (INSTRUMENT ID)
- FIRST LETTER (INSTRUMENT ID)

EXAMPLE:
LT-04032 = SBR TANK #2 LEVEL TRANSDUCER

PROCESS LOCATION (PP)		SERIES LOCATION (TT)	
00	GENERAL/MISCELLANEOUS	0	SHEET 0
01	FIELD	1	SHEET 1
02	POTABLE WATER	2	SHEET 2
03	HEADWORKS	3	SHEET 3
04	SBR AERATION	4	SHEET 4
05	SBR PROCESS	5	SHEET 5
06	DISINFECTION	6	SHEET 6
07	RETURN PS	7	SHEET 7
08	DEWATERING	8	SHEET 8

FLUID CODE ABBREVIATION		EQUIPMENT NUMBERS	
		EQUIPMENT ABBREVIATIONS	# STARTING AT
BP	BYPASS		
BW	BACKWASH		
CDS	CHEMICAL DOSING		
CVR	CONVEYOR	PUMPS (PMP)	00–09
DR	DRAIN	MOTORS (M/MXR/BLR)	10–19
EFFLT	EFFLUENT	VALVES (XV/V/SV)	20–29
EXH	EXHAUST/EXHAUST FAN	LEVEL INST (LT/LS)	30–39
FA	FOUL AIR	FLOW INST (FT/FS/FE/FIT)	40–49
FLTRT	FILTRATE	PRESSURE INST (PT/PS/PG)	50–59
GRT	GRIT	ANALYTICAL (AT)	60–69
INFLT	INFLUENT	MEMBRANE (SMU)	70–79
MLSS	MIX LIQUOR	BUBBLE DIFFUSER (XBD)	80–85
OF	OVERFLOW	MISCELLANEOUS (MISC)	90–99
PA	PROCESS AIR		
PW	POTABLE WATER		
RAS	RETURN ACTIVATED SLUDGE		
RECYC	RECYCLE		
RET	RETURN		
RNS	RINSE		
RW	RECLAIMED WATER		
SECPR	SECONDARY PROCESS		
SD	SLUDGE DISCHARGE		
SNT	SUPERNATANT		
SWR	SEWER		
TERT	TERTIARY		
TW	TREATED WATER		
WAS	WASTE ACTIVATED SLUDGE		
WTR	WATER		
WW	WASTE WATER		

GENERAL INSTRUMENT OR FUNCTION SYMBOLS

	FIELD MOUNTED	PRIMARY LOCATION ACCESSIBLE TO OPERATOR	PRIMARY LOCATION INACCESSIBLE TO OPERATOR	AUXILIARY LOCATION ACCESSIBLE TO OPERATOR
DISCRETE INSTRUMENTS	○	⊖	⊖	⊖
SHARED DISPLAY SHARED CONTROL	○	⊖	⊖	⊖
COMPUTER FUNCTION	⬡	⬡	⬡	⬡
PROGRAMMABLE LOGIC CONTROL	◇	◇	◇	◇

HARDWARE INTERLOCK (I)

PLC "SOFT" INTERLOCK (I)

VALVE SYMBOLS

NC NO
- GATE VALVE
- GATE VALVE
- BALL VALVE
- DIAPHRAGM VALVE
- PLUG VALVE
- 3-WAY BALL VALVE
- NEEDLE VALVE/KNIFE GATE
- MUD VALVE
- FLANGED BUTTERFLY VALVE
- LUGGED BUTTERFLY VALVE
- CHECK VALVE
- DOUBLE LEAF CHECK VALVE
- WEIR GATE/TELESCOPE VALVE
- STOP LOG/GATE
- SLUICE/SLIDE GATE

VALVE ACTUATORS

- DIAPHRAGM ACTUATOR
- MOTOR ACTUATOR (M)
- SOLENOID ACTUATOR (S)
- CYLINDER ACTUATOR
- LEVER
- HAND WHEEL
- CHAIN WHEEL

RELIEF DEVICES

- AIR/PRESSURE RELIEF
- VACUUM RELIEF
- RUPTURE DISK FOR PRESSURE RELIEF
- RUPTURE DISK FOR VACUUM RELIEF

REGULATORS

- PRESSURE REDUCING
- BACK PRESSURE
- REGULATOR WITH EXTERNAL PILOT
- DIFFERENTIAL PRESSURE

PIPING SYMBOLS

- Y STRAINER
- BLIND FLANGE
- FUNNEL
- CONCENTRIC REDUCER
- ECCENTRIC REDUCER
- EDUCTOR
- WELDED CAP
- WELDED PIPE END
- SCREWED CAP
- UNION
- CAMLOCK FITTING
- FLEXIBLE LINE
- SPECTACLE BLIND
- EXPANSION JOINT
- TP XX — TIE-IN POINT
- FLEX JOINT

MECHANICAL EQUIPMENT

- METERING PUMP
- CENTRIFUGAL PUMP OR BLOWER
- SUBMERSIBLE PUMP
- TURBINE PUMP
- ROTARY BLOWER
- MIXER
- PROGRESSIVE CAVITY PUMP
- AERATOR
- EXHAUST FAN
- VERTICAL MULTI-STAGE PUMP
- ROTARY LOBE PUMP
- DECANTER
- ULTRA SONIC LEVEL TRANSMITTER
- CHEMICAL INJECTOR
- FLOW METER OR MOTOR
- ROTOMETER
- MAZZI INJECTOR
- VORTEX SHEDDING
- SONIC
- GRINDER
- STATIC MIXER
- SILENCER
- RADAR LEVEL TRANSMITTER
- AV SENSOR
- HORN/STROBE LIGHT (H/S)

NOTE: ALL PRESSURE GAUGES AND OTHER SMALL PROCESS MECHANICAL INSTRUMENT EQUIPMENT SHALL BE SUPPLIED WITH ISOLATION VALVES AND ADDITIONAL APPURTENANCES (E.G. PRESSURE PULSATION DAMPENERS/SNUBBERS) AS REQUIRED FOR PROPER OPERATION

ABBREVIATIONS

ACP	ACCESS CONTROL PANEL	NTU	TURBIDITY
AE	ANALYTICAL SENSOR	OC	ODOR CONTROL
AI	ANALOG INPUT	OCA	OPEN–CLOSE–AUTO
AIT	ANALYTICAL INDICATOR TRANSMITTER	OCR	OPEN–CLOSE–REMOTE
AMP	AMPERE	OFS	OFF SPEC.
AO	ANALOG OUTPUT	OIT	OPERATOR INTERFACE TERMINAL
AT	ANALYTICAL TRANSMITTER	OO	ON/OFF (MAINTAINED)
ATS	AUTOMATIC TRANSFER SWITCH	OOA	ON–OFF–AUTO
AV	AIR VELOCITY	OOR	ON–OFF–REMOTE
BLR	BLOWER	OSC	OPEN–STOP–CLOSE
CB	CIRCUIT BREAKER	PE	PRESSURE SENSOR
CBL	COARSE BUBBLE DIFFUSER	PG	PRESSURE GAUGE
CE	CONDUCTIVITY SENSOR (TDS)	PH	POTENTIAL OF HYDROGEN
CFR	CHEMICAL FEEDER	PI	PRESSURE INDICATOR / PULSE INPUT
CG	COMBUSTIBLE GASES	PID	PROPORTIONAL–INTEGRAL–DERIVATIVE
CHV	CHECK VALVE	PIT	PRESSURE INDICATOR TRANSMITTER
CL2	CHLORINE	PLC	PROGRAMMABLE LOGIC CONTROLLER
CMP	COMPACTOR	PMP	PUMP
CON	CONVEYOR	PNL	PANEL
CWC	COMPACTOR/WASHER/CONVEYOR	PO	PULSE OUTPUT
DCS	DISTRIBUTED CONTROL SYSTEM	PPG	POUNDS PER GALLON
DI	DIGITAL INPUT	PPH	POUNDS PER HOUR
DO	DISSOLVED OXYGEN / DIGITAL OUTPUT	PPM	PARTS PER MILLION
DRY	BIOSOLIDS DRYER	PRESS	PRESSURE
DSS	DISTRIBUTION SWITCHBOARD SECTION	PRV	PRESSURE RELIEF OR REDUCING VALVE
DWG	DRAWING	PSH	PRESSURE SWITCH HIGH
EST	EMERGENCY STOP	PSI	POUNDS PER SQUARE INCH
ETM	ELAPSED TIME METER	PSL	PRESSURE SWITCH LOW
EXIST	EXISTING	PT	PRESSURE TRANSMITTER
FBD	FINE BUBBLE DIFFUSER	PV	PROCESS VARIABLE
FC	FAIL CLOSED	REM	REMOTE
FCV	MODULATING CONTROL VALVE	RF	RADIO FREQUENCY
FE	FLOW SENSOR	RIO	REMOTE INPUT–OUTPUT
FeCL2	FERROUS CHLORIDE	RST	RESET
FI	FLOW INDICATOR	RTU	REMOTE TELEMETRY UNIT
FIT	FLOW INDICATOR TRANSMITTER	SES	SERVICE ENTRANCE SECTION
FR	FORWARD–REVERSE	SG	SLUICE GATE
FS	FINE SCREEN / FULL SPEED	SLC	SINGLE LOOP CONTROLLER
FSL	FLOW SWITCH LOW	SLOS	START–LOCK–OFF–STOP
FT	FLOW TRANSMITTER	SO2	SULFUR D
GDR	GRINDER	SMU	SUBMERGED MEMBRANE UNIT
GPD	GALLONS PER DAY	SP	SETPOINT
GPH	GALLONS PER HOUR	SPD	SPEED
GPM	GALLONS PER MINUTE	SPR	SPARE
GRC	GRIT CLASSIFIER	SS	START/STOP (MAINTAINED)
H_2S	HYDROGEN SULFIDE	SSS	SOLID STATE STARTER (SOFT START)
HMI	HUMAN MACHINE INTERFACE	STG	MANUAL STOP GATE
HOA	HAND–OFF–AUTO	SUG	SLUICE GATE
HOR	HAND–OFF–REMOTE	SV	SOLENOID VALVE
JB	JUNCTION BOX	TC	TABLET CHLORINATOR
KGV	KNIFE GATE VALVE	TDS	TOTAL DISSOLVED SOLIDS
LAN	LOCAL AREA NETWORK	TE	TEMPERATURE SENSOR
LCP	LOCAL CONTROL PANEL	TG	TEMPERATURE GAUGE
LE	LEVEL SENSOR	TI	TEMPERATURE INDICATOR
LIT	LEVEL INDICATOR TRANSMITTER	TIT	TEMPERATURE INDICATOR TRANSMITTER
LOS	LOCK–OFF–STOP	TNK	TANK
LR	LOCAL / REMOTE	TS	TEMPERATURE SWITCH
LSH	LEVEL SWITCH HIGH	TSH	TEMPERATURE SWITCH HIGH
LSHH	LEVEL SWITCH HIGH HIGH	TT	TEMPERATURE TRANSMITTER
LSL	LEVEL SWITCH LOW	TV	TELESCOPING VALVE
LSLL	LEVEL SWITCH LOW LOW	UPS	UNINTERRUPTIBLE POWER SUPPLY
LSM	LEVEL SWITCH MEDIUM	UVU	ULTRAVIOLET UNIT
LT	LEVEL TRANSMITTER	V	MANUAL VALVE
MCAS	MINI CONTROL AND STATUS	VFD	VARIABLE FREQUENCY DRIVE
MCC	MOTOR CONTROL CENTER	WE	WEIR
ME	MOISTURE SENSOR	WEG	WEIR GATE
MGD	MILLION GALLONS PER DAY	WR	ADJUSTABLE WEIR
MGL	MILLIGRAM PER LITER	XV	AUTOMATED OPEN/CLOSE VALVE/GATE
MOT	MOTOR	ZS	SWITCH POSITION
MS	MOTOR STARTER		
MTU	MASTER TELEMETRY UNIT		
MXR	MIXER		
NaHSO3	SODIUM BISULFITE		
NaOCL	SODIUM HYPOCHLORITE		

LINE CODES

- MAJOR PROCESS LINE
- MINOR PROCESS LINE
- AIR
- ELECTRICAL
- PLC TO HMI COMMUNICATION
- AUTO–DIALER AND PRIORITY LEVEL

00"–XXX — LINE SIZE & NUMBER

PROCESS CONTINUATION WITHIN SCOPE

INSTRUMENT NUMBERING

FSS NPPNNN — XX – DEVICE FUNCTION
- FIRST LETTER (INSTRUMENT ID)
- SUCCEEDING LETTERS (INSTRUMENT ID)
- EQUIPMENT NUMBER

LINE NUMBER GROUPS

000	OVERFLOW/ BYPASS/ DRAIN/ SUPERNATANT/SCNG
100	INFLUENT/ MIX LIQUOR/ SECONDARY EFFLUENT / EFFLUENT
200	TERTIARY/ REUSE WATER/ BACKWASH/ RECYCLE WATER
300	PERMEATE/ FILTRATE/ CENTRATE
400	PROCESS AIR
500	CHEMICAL DOSING/ POLYMER
600	FOUL AIR
700	WATER/ TREATED WATER/ FILTERED WATER
800	RAS/ SOLIDS
900	WAS/ SCUM/ WASTE WATER/ RAW WATER

EQUIPMENT SUPPLIED BY IDENTIFIER

✳ AQUA–AEROBICS

NO	BY	DATE	REVISIONS	DATE	APP.

THESE DRAWINGS ARE THE PROPERTY OF P.A.C.E. AND SHALL NOT BE REPRODUCED IN ANY MANNER NOR BE USED FOR CONSTRUCTION UNLESS STAMPED 'ISSUED FOR CONSTRUCTION'.

Registered Professional Engineer (Civil) CERTIFICATE NO. 70097 Signed 12/31/25 ARIZONA, U.S.A. Expires 12/31/28

PREPARED BY: PACE
DESIGNED BY: NE
DRAWN BY: DS, WW
CHECKED BY: TP
SCALE: AS NOTED
DATE: NOV 2025
JOB NO.: B614

TITLE: **P&ID GENERAL NOTES**

JOB: TOWN OF JEROME WASTEWATER TREATMENT PLANT — YAVAPAI CO. AZ

100% ISSUED FOR BID

PREPARED BY: TAYLOR B. PIERCE — R.C.E 70097 — DATE

PACE
Advanced Water Engineering
8723 E. Via de Ventura, Suite F-200, SCOTTSDALE, CA 85258
P: (480) 991-3995 | www.pacewater.com

SHEET **I0.0**
93 OF 99 SHEETS

JOB NO. B614

W:\B614\Engineering\B614-30\sheets\B614-I0.1 GENERAL.dwg - Tab: B614-I0.0 GENERAL - by nsddingson on 12/17/25 at 9:55:33 AM

AUTO-DIALER

PRIORITY NO. ALARM
NOTIFICATION

SCREEN

FAIL ALARM YA 03010

FAIL Y1 03010

HMI

HMI

FAIL Y1 03010

SBR CONTROL PANEL (VENDOR)

SBR CONTROL PANEL (VENDOR)

(480 VAC) CB

MCC

MCC

MS 03010 POT/HIM
HS 03010A HOA
MS 03010B POT/HIM
HS 03010B HOA
MS 03010C POT/HIM
HS 03010C HOA
G RUNNING
Y FAULT
ETM
HEADWORKS CONTROL PANEL

SEWER MAIN FROM COLLECTION SYSTEM
12"-SWR-101

ROCK TRAP

8"-SWR-102

EST 03010A
M-03010A
LE-03031
LE-03032
EST 03010B
M-03010B
LE-03033
LE-03034

PV-03021
PV-03022

CLIMBER BAR SCREENS

10"-INFLT-103
A SCREENED INFLUENT TO SBR REF SHT I1.1

ZSO 03023
ZSC 03023
HS 03023
SV 03023

POTABLE WATER FROM TOWN
2"-WTR-701

V-02020

A DRYING BED LIFT STATION RETURN REF SHT I1.4
3"-DR RET-001

CV-07020

BV-07021

EST 03010C
M-03010C

1"-DR-005

DISPOSAL

HEADWORKS

W:\B614\Engineering\B614-30sheets\B614-I1.1.dwg - Tab: I1.0 - by naddington on 11/17/25 at 9:55:57 AM

NO	BY	DATE	REVISIONS	DATE	APP.

Registered Professional Engineer (Civil)
CERTIFICATE NO. 70097
Timothy B. Pierce
Signed
ARIZONA, U.S.A.
Expires 12/31/28

PREPARED BY: PACE
DESIGNED BY: NE
DRAWN BY: DS, WW
CHECKED BY: TP
SCALE: AS NOTED
DATE: NOV 2025
JOB NO: B614

THESE DRAWINGS ARE THE PROPERTY OF P.A.C.E. AND SHALL NOT BE REPRODUCED IN ANY MANNER NOR BE USED FOR CONSTRUCTION UNLESS STAMPED "ISSUED FOR CONSTRUCTION".

100% ISSUED FOR BID

PREPARED BY: TAYLOR B. PIERCE R.C.E 70097 DATE

PACE
Advanced Water Engineering
8723 E. Via de Ventura, Suite 130 SCOTTSDALE, CA 85258
P: (480) 991-3995 | www.paceaz.com

TITLE: HEADWORKS

JOB: TOWN OF JEROME
WASTEWATER
TREATMENT PLANT
YAVAPAI CO. AZ

SHEET
I1.0
94 OF 99 SHEETS

JOB NO. B614

HEADWORKS

AUTO-DIALER

PRIORITY NO. ALARM NOTIFICATION

SBR INFLUENT VALVE (1) | SBR #1 MIXER (2) | SBR #1 LEVEL (1)(1)(1)(1) | SBR #1 DO (2)(2) | WAS PUMP #1 (1) | DECANTER (1) | DECANT VALVE (1)

HMI

FAIL ALARM YA 05120 — OPEN YI 05120 — CLOSE YI 05120
FAIL ALARM YA 05110 — RUNNING YI 05110 — AUTO POS. YI 05110
HIGH ALARM LAH 05130 — LOW ALARM LAL 05130 — LEVEL LIR 05130 FT
HIGH ALARM LAH 05131 A — LOW ALARM LAL 05131 B
HIGH ALARM LAH 05160 A — LOW ALARM LAL 05160 A — DO AIR 05160 A mg/L
FAIL ALARM YA 05100 — RUNNING YI 05100 — AUTO POS. ZI 05100
FAIL ALARM YA 05111 — OPEN YI 05111 — CLOSE YI 05111
% OPEN YA 05121 — FAIL ALARM YA 05121 — % OPEN YI 05121 — CLOSED YIC 05121

OPEN YO 05120 — CLOSE YC 05120 — OPEN YI 05120 — CLOSE YI 05120 — DO — DO — DI — DI
RUN YC 05110 — RUNNING YI 05110 — AUTO POS. YI 05110 — DO — DI — DI
LEVEL LIR 05130 FT — AI
HIGH LEVEL LI 05131 A — LOW LEVEL LI 05131 B — DI — DI
DO AIR 05160 A mg/L — AI
RUN YC 05100 — RUNNING YI 05100 — AUTO POS. ZI 05100 — DO — DI — DI
OPEN YO 05111 — CLOSE YC 05111 — OPEN YI 05111 — CLOSE YI 05111 — DO — DO — DI — DI
% OPEN SC 05121 — CLOSE YO 05121 — % OPENED YI 05121 — CLOSED YIC 05121 — AO — AO — AI — AI

(120 VAC) CB — (120 VAC) CB — (480 VAC) CB

SBR CONTROL PANEL (VENDOR)

RTM 05110 — MS 05110 — HS 05110 HOA — TS 05110 TEMP — MA 05110 LEAK
MA 05100 LEAK — TS 05100 TEMP — MS 05100 — HS 05100 HOA

MCC

B — PROCESS AIR FROM BLOWER BUILDING — 4"-PA-402 — REF SHT I1.3
A — PROCESS AIR FROM BLOWER BUILDING — 4"-PA-401 — REF SHT I1.3
A — SCREENED INFLUENT FROM HEADWORKS — 10"-INFLT-103 — REF SHT I1.0
C — SUPERNATANT FROM AEROBIC DIGESTER — 6"-SNT-003 — REF SHT I1.2

SAME AS SBR #1

2"-WAS-901 — A — WASTE SLUDGE TO AEROBIC DIGESTER — REF SHT I1.2

SBR INFLUENT VALVE 1: HS 05120 — ZSO 05120 — ZSC 05120 — PV 05120 — BFV-04326A 4"x3" — BFV-04326B 4"x3" — PV-05120
SBR INFLUENT VALVE 2: HS 05122 — ZSO 05122 — ZSC 05122 — PV 05122 — BFV-04327A 4"x3" — BFV-04327B 4"x3" — PV-05122

3"-PA-404 — 3"-PA-405 — 3"-PA-406 — 3"-PA-407

LE 05130 — LSH 05131A — LSL 05131B — AT 05160A — AE 05160B DO
LE 05132 — LSH 05133A — LSL 05133B — AT 05161A — AE 05161B DO

SBR DECANTER 1 M-05111 — BFV 05121 — ZSO 05121 — ZSC 05121 — HS 05121 — BFV-05121
SBR DECANTER 2 M-05113 — BFV 05123 — ZSO 05123 — ZSC 05123 — HS 05123 — BFV-05123

SBR MIXER 1 MXR-05110 — ME 05110 LEAK — TE 05110 TEMP
SBR MIXER 2 MXR-05112 — ME 05112 LEAK — TE 05112 TEMP

ME 05100 LEAK — TE 05100 TEMP — WAS PUMP 1 PMP-05100
ME 05101 LEAK — TE 05101 TEMP — WAS PUMP 2 PMP-05101

FBD-04180 — SBR 1 — V-08120 — PV-08122
FBD-04181 — SBR 2 — V-08121 — PV-08123

6"-EFFLT-104 — B — EFFLUENT TO SURGE BASIN — REF SHT I1.2
6"-OF-002 — C — OVERFLOW TO DRYING BED LIFT STATION — REF SHT I1.4
6"-WAS-902 — D — WASTE SLUDGE TO DEWATERING — REF SHT I1.4

SEQUENCING BATCH REACTOR

NO	BY	DATE	REVISIONS	DATE	APP.

Registered Professional Engineer (Civil) — CERTIFICATE NO. 70097 — Timothy B. Pierce — Signed — ARIZONA, U.S.A. — Expires 12/31/28

PREPARED BY: PACE
DESIGNED BY: NE
DRAWN BY: DS, WW
CHECKED BY: TP
SCALE: AS NOTED
DATE: NOV 2025
JOB NO.: B614

TITLE: SEQUENCING BATCH REACTOR

JOB: TOWN OF JEROME WASTEWATER TREATMENT PLANT — YAVAPAI CO. AZ

100% ISSUED FOR BID

PREPARED BY: TAYLOR B. PIERCE — R.C.E. 70097 — DATE

PACE
Advanced Water Engineering
8723 E. VIA DE COMMERCIO, BLDG. 4, SUITE 4, SCOTTSDALE, CA 85258
P: (480) 991-3955 | www.paceaztr.com

SHEET I1.1
95 OF 99 SHEETS

JOB NO. B614

THESE DRAWINGS ARE THE PROPERTY OF P.A.C.E. AND SHALL NOT BE REPRODUCED IN ANY MANNER NOR BE USED FOR CONSTRUCTION UNLESS STAMPED "ISSUED FOR CONSTRUCTION".

W:\B614\Engineering\B614-30sheet\B614I1.1.dwg - Tab: I1.1 - by neddington on 11/17/25 at 8:55:57 AM

AUTO-DIALER

PRIORITY NO. ALARM NOTIFICATION

SURGE BASIN LEVEL

EFFLUENT FLOW METER

EFFLUENT DISCHARGE VALVE

DIGESTER LEVEL SWITCHES

HIGH ALARM LAH 05230 | HIGH ALARM LAH 05231 | % OPEN YA 05221 | FAIL ALARM YA 05221 | HIGH ALARM LAH 05232 | LOW ALARM LAL 05232 | HIGH ALARM LAH 05233

LEVEL LIR 05230 FT | HIGH LEVEL LI 05231 | GPM FIR 05240 GPM | TOTAL FQIR 05240 MG | % OPEN YI 05221 | CLOSED YIC 05221 | LEVEL LIR 05232 FT | HIGH LEVEL LI 05233

HMI

LEVEL LIR 05230 FT | HIGH LEVEL LI 05231 | GPM FI 05240 GPM | TOTAL FQI 05240 MG | % OPEN SC 05221 | CLOSE YO 05221 | % OPENED YI 05221 | CLOSED YIC 05221 | LEVEL LIR 05232 FT | HIGH LEVEL LI 05233

SBR CONTROL PANEL (VENDOR)

AI | DI | AI | AO | AO | AI | AI | AI | DI

(120 VAC) CB | (480 VAC) CB

MCC

C PROCESS AIR FROM BLOWER BUILDING REF SHT I1.3 — 2"-PA-403

A WASTE SLUDGE FROM SBR REF SHT I1.1 — 2"-WAS-901

LE 05232 | LSH 05233 | V-05220 | 6"-SNT-003 | C SUPERNATANT TO SBR 1 REF SHT I1.1

CBD-04280 | V-08220

AEROBIC DIGESTER

PV-08221 | 6"-SD-801 | A DIGESTED SLUDGE TO DEWATERING REF SHT I1.4

ZSO 06221 | ZSC 06221 | HS 06221 | BFV 06221

FT 06240 | FE 06240

LE 05230 | LSH 05231

B EFFLUENT FROM SBR REF SHT I1.1 — 6"-EFFLT-104

6"-EFFLT-105 | PV-06220 | FM-06240 | BFV-06221

CHLORINATION TABLET FEEDER

TAB-06290

V-06222 (WEIR SLIDE GATE)

DECHLORINATION TABLET FEEDER

TAB-06291

6"-EFFLT-106 | — TREATED EFFLUENT TO BITTER CREEK

SURGE BASIN

CHLORINE CONTACT BASIN

CHLORINE CONTACT AND DIGESTER

100% ISSUED FOR BID

PREPARED BY: TAYLOR B. PIERCE

PACE Advanced Water Engineering
8723 E. Via de Commercio, Suite 104, SCOTTSDALE, CA 85258
P: (408) 991-3595 | www.pacewater.com
R.C.E 70097 DATE

NO	BY	DATE	REVISIONS	DATE	APP.

Registered Professional Engineer (Civil) CERTIFICATE NO. 70097 Timothy B. Pierce Signed ARIZONA, U.S.A. Expires 12/31/28

THESE DRAWINGS ARE THE PROPERTY OF P.A.C.E. AND SHALL NOT BE REPRODUCED IN ANY MANNER NOR BE USED FOR CONSTRUCTION UNLESS STAMPED "ISSUED FOR CONSTRUCTION".

PREPARED BY: PACE
DESIGNED BY: NE
DRAWN BY: DS, WW
CHECKED BY: TP
SCALE: AS NOTED
DATE: NOV 2025
JOB NO.: B614

TITLE: CHLORINE CONTACT & DIGESTER

JOB: TOWN OF JEROME WASTEWATER TREATMENT PLANT — YAVAPAI CO. AZ

SHEET I1.2
96 OF 99 SHEETS

JOB NO. B614

W:\B614\Engineering\B614-Sheets\B614-I1.1.dwg - Tab: I1.2 - by reddington on 11/17/25 at 9:55:57 AM

AUTO-DIALER

PRIORITY NO. 1 ALARM NOTIFICATION

AERATION BLOWER #1 | AERATION BLOWER #2 | AERATION BLOWER #3 | DIGESTER BLOWER #1 | SBR #1 AIR VALVE | SBR #2 AIR VALVE

HMI

SBR CONTROL PANEL (VENDOR)

MCC

NOTE:
CONTRACTOR TO REVIEW SHOP DRAWINGS FROM EQUIPMENT MANUFACTURER FOR SIZE, NUMBER AND SCOPE OF SUPPLY OF VALVES AND INSTRUMENTS.

BLOWER 1: AMBIENT AIR → ENCLOSURE AIR FILTER → BLR-04310 → PT 04310 / TT 04310 → BLOW OFF VALVE → CV-04320A → BFV-04320B → 3" → 6" → 6"x4" → BFV-04325A → ZSO 04325A / ZSC 04325A / XV 04325A → 4"-PA-401 → A PROCESS AIR TO SBR 1 REF SHT I1.1

BLOWER 2: AMBIENT AIR → ENCLOSURE AIR FILTER → BLR-04311 → PT 04311 / TT 04311 → BLOW OFF VALVE → CV-04321A → BFV-04321B → 3"

BLOWER 3: AMBIENT AIR → ENCLOSURE AIR FILTER → BLR-04312 → PT 04312 / TT 04312 → BLOW OFF VALVE → CV-04322A → BFV-04322B → 3" → 2"x6" → BFV-04524

BLOWER 4: AMBIENT AIR → ENCLOSURE AIR FILTER → BLR-04313 → PT 04313 / TT 04313 → BLOW OFF VALVE → CV-04323A → BFV-04523B → 2" → 6"x4" → BFV-04325B → ZSO 04325B / ZSC 04325B / XV 04325B → 4"-PA-402 → B PROCESS AIR TO SBR 2 REF SHT I1.1

→ 2"-PA-403 → C PROCESS AIR TO AEROBIC DIGESTER REF SHT I1.2

BLOWER ROOM

100% ISSUED FOR BID

NO	BY	DATE	REVISIONS	DATE	APP.

Registered Professional Engineer (Civil) CERTIFICATE NO. 70097 Nicholas E. Ellsworth Signed 12/31/25 ARIZONA U.S.A. Expires 12/31/28

PREPARED BY: PACE
DESIGNED BY: NE
DRAWN BY: DS, WW
CHECKED BY: TP
SCALE: AS NOTED
DATE: NOV 2025
JOB NO.: B614

THESE DRAWINGS ARE THE PROPERTY OF P.A.C.E. AND SHALL NOT BE REPRODUCED IN ANY MANNER NOR BE USED FOR CONSTRUCTION UNLESS STAMPED 'ISSUED FOR CONSTRUCTION'.

TITLE: BLOWER ROOM

JOB: TOWN OF JEROME WASTEWATER TREATMENT PLANT — YAVAPAI CO. AZ

PREPARED BY: TAYLOR B. PIERCE — R.C.E 70097 — DATE
PACE Advanced Water Engineering
8723 E. Via de Commercio, Suite 104 | CONTROL | Tucson, AZ 85258
P: (480) 991-3995 | www.pacewater.com

SHEET I1.3
97 OF 99 SHEETS

JOB NO. B614

W:\B614\Engineering\B614-30\sheets\B614-I1.1.dwg - Tab: I1.3 - by reddington on 11/17/25 at 9:35:57 AM

AUTO-DIALER

PRIORITY NO. ALARM NOTIFICATION

DEWATERING FEED PUMP

SLUDGE FEED VALVE

DRYING BED LIFT STATION PUMPS

HMI

SBR CONTROL PANEL (VENDOR)

MCC

(480VAC) CB

(120 VAC) CB

FAIL ALARM YA 08400

RUNNING Y1 08400

RUN YC 08400

DI

DO

FAIL ALARM YA 08420B

OPEN Y1 08420B

CLOSE YC 08420B

FAIL ALARM YA 07400A

FAIL ALARM YA 07400B

RUNNING Y1 07400A

RUNNING Y1 07400B

SLUDGE BAGGING SYSTEM CONTROL PANEL

MS 08400 HOA

HS 08400 HOA

G RUNNING

Y FAULT

ETM

DRYING BED LIFT STATION CONTROL PANEL

MS 07400A HOA

HS 07400A HOA

MS 07400B HOA

HS 07400B HOA

OVERFLOW LIFT STATION CONTROL PANEL

HS 07401 HO

C OVERFLOW FROM SBR REF SHT I1.1

8"-OF-002

A DIGESTED SLUDGE FROM DIGESTER REF SHT I1.2

6"-SD-801

D WASTE SLUDGE FROM SBR 1 & 2 REF SHT I1.1

6"-WAS-902

— POTABLE WATER FROM TOWN

2"-PW-702

V-02420

PV-08421

6"x4"

PV-08420A

4"-WAS-903

PV-08420B

ZSO 08420B

ZSC 08420B

XV 08420B

PV-08422A

PV-08422B

SLUDGE DRYING BEDS

DISPOSAL

4"-FLTRT-302

4"-FLTRT-301

SLUDGE BAGGING UNIT BAG-08490

BV-08423

PMP-08400

MXR-08410

DRY POLYMER MIXING UNIT

BV-08425

CV-08424

1"-CDS-501

PMP-08401

ARV-07422

3"-DR RET-001

A OVERFLOW RETURN TO HEADWORKS REF SHT I1.0

LSHH 07430A

LSH 07430B

LSL 07430C

CV-07420A

V-07420B

CV-07421A

V-07421B

PMP-07400A

PMP-07400B

DRYING BED LIFT STATION

4"-OF-003

EMERGENCY OVERFLOW BASIN

ARV-07425

2"-OF RET-004

BV-07424

CV-07423

4"-OF-004

LSHH 07431A

LSL 07431B

PMP-07401

OVERFLOW LIFT STATION

DEWATERING AND LIFT STATIONS

100% ISSUED FOR BID

PREPARED BY: TAYLOR B. PIERCE R.C.E 70097 DATE

PACE Advanced Water Engineering
8723 E. Via de Commercio, Suite 1-1, Scottsdale, CA 85258
P: (480) 991-3595 | www.pacewater.com

TITLE: DEWATERING & LIFT STATIONS

JOB: TOWN OF JEROME WASTEWATER TREATMENT PLANT AZ
YAVAPAI CO.

SHEET I1.4
98 OF 99 SHEETS

JOB NO. B614

NO	BY	DATE	REVISIONS	DATE	APP.

Registered Professional Engineer (Civil) CERTIFICATE NO. 70097 Timothy B. Pierce Signed ARIZONA, U.S.A. Expires 12/31/28

PREPARED BY: PACE
DESIGNED BY: NE
DRAWN BY: DS, WW
CHECKED BY: TP
SCALE: AS NOTED
DATE: NOV 2025
JOB NO. B614

THESE DRAWINGS ARE THE PROPERTY OF P.A.C.E. AND SHALL NOT BE REPRODUCED IN ANY MANNER NOR BE USED FOR CONSTRUCTION UNLESS STAMPED "ISSUED FOR CONSTRUCTION".

V:\B614\Engineering\B614-30\sheets\B614-I1.1.dwg - Tab: I1.4 - by raddington on 11/17/25 at 9:55:57 AM

AUTO-DIALER

PRIORITY NO. ALARM NOTIFICATION

ATS

GENERATOR

FAULT ALARM YA 01003

LOW ALARM YA 01003

UTILITY SWITCH POSITION YI 01001

FAULT YI 01003

OFF / RUNNING YI 01003

LOW FUEL LEVEL YI 01003

HMI

HMI

UTILITY SWITCH POSITION YI 01001

FAULT YI 01003

OFF / RUNNING YI 01003

LOW FUEL LEVEL YI 01003

SBR CONTROL PANEL (VENDOR)

SBR CONTROL PANEL (VENDOR)

DI

DI

DI

DI

RUN R

FAIL A

I

MCC

MCC

(480 VAC) CB

C

C

C

C

C

E

E

LOCATED ON GENERATOR

ANNUNCIATOR

SWITCH POSITION

DI 01002

DO 01002

GEN RUN

EST 01000

C

ON-BOARD POWER ZONE

POWER FROM APS

C1

TRANSFORMER (BY UTILITY)

POWER TO E

SES

ATS

C CALL

GENERATOR

POWER TO E

SES, ATS, AND STAND-BY GENERATOR

100% ISSUED FOR BID

PREPARED BY: TAYLOR B. PIERCE R.C.E. 70097 DATE

PACE
Advanced Water Engineering
8723 E. VIA DE VENTURA, SUITE A, SCOTTSDALE, CA 85258
P: (480) 991-3595 | www.pacewater.com

JOB: TOWN OF JEROME WASTEWATER TREATMENT PLANT — YAVAPAI CO. AZ

TITLE: GENERATOR

SHEET I1.5

99 OF 99 SHEETS

JOB NO. B614

NO	BY	DATE	REVISIONS	DATE	APP.

Registered Professional Engineer (Civil) CERTIFICATE NO. 70097 TAYLOR B. PIERCE Signed ARIZONA, U.S.A. Expires 12/31/28

PREPARED BY: PACE
DESIGNED BY: NE
DRAWN BY: DS, WW
CHECKED BY: TP
SCALE: AS NOTED
DATE: NOV 2025
JOB NO.: B614

THESE DRAWINGS ARE THE PROPERTY OF P.A.C.E. AND SHALL NOT BE REPRODUCED IN ANY MANNER NOR BE USED FOR CONSTRUCTION UNLESS STAMPED 'ISSUED FOR CONSTRUCTION'.

W:\B614\Engineering\B614-30sheets\B614I1.1.dwg - Tab: I1.5 - by neddington on 11/17/25 at 8:55:57 AM

Jerome Wastewater Treatment Plant Improvements

ADDENDUM #1

Date: May 7, 2026

Quest CDN #9117808

This addendum is to formally issue responses to bidder questions and minor modifications. Reminder: Acknowledge receipt of this addendum on the Bid Form.

Attachments:

1. Attachment 1 – Geotechnical Evaluation
2. Attachment 2 – C-410 Bid Form

Notice:

1. The non-mandatory pre-bid conference will be held on **Thursday May 14th** at **2:00 PM** at the Council Chambers, Town of Jerome, 600 Clark Street, Jerome AZ, 86331.

   The pre-bid conference will also be made available for **virtual attendees at the link below:**

   https://teams.microsoft.com/meet/21531934771837?p=2ZyfMU58TuhQfICc40

   Meeting ID: 215 319 347 718 37
   Passcode: DE22xX6D

Clarifications

1. It was brought to our attention that the project completion dates were not included in the bid manual. Form C-520 – Agreement Between Owner and Contractor, Section 4.03(A) shall be modified to reflect the project times as follows:

   "The Work will be substantially complete within **300** days after the date when the Contract Times commence to run as provided in Paragraph 4.01 of the General Conditions, and completed and ready for final payment in accordance with Paragraph 15.06 of the General Conditions within **330** days after the date when the Contract Times commence to run."

2. The bid form (form C-410 – Bid Form) has been updated and is **attached.**

Questions

1. We'd like to receive a copy of the geotechnical report for the Jerome WWTP.

   Response: Please find a copy of the geotechnical report attached to this addendum. The geotechnical report is also appended to the Technical Specifications included in the bid manual.

Western Technologies Inc.

GEOTECHNICAL EVALUATION REPORT

JEROME WWTP UPGRADES
Jerome, Arizona
WT Reference No. 2522JW197

PREPARED FOR:
Pace Advanced Water Engineering
P.O. Box 4805
Scottsdale, Arizona 85261
Attn: Ms. Andrea Jaycox, Senior Project Coordinator

October 25, 2022

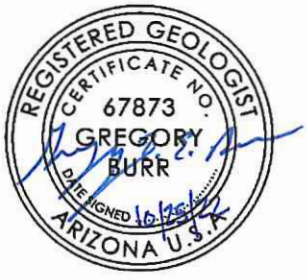

Gregory L. E. Burr, R.G., E.I.T.
Director of Geotechnical Services



Craig P. Wiedeman, P.E.
Senior Geotechnical Engineer

Western Technologies Inc.
The Quality People
Since 1955

2400 East Huntington Drive
Flagstaff, Arizona 86004-8934
(928) 774-8700 • fax 774-6469

October 25, 2022

Pace Advanced Water Engineering
P.O. Box 4805
Scottsdale, Arizona 85261

Attn: Ms. Andrea Jaycox, Senior Project Coordinator

Re: Geotechnical Evaluation
Jerome WWTP Upgrades
Jerome, Arizona

Job No. 2522JW197

Western Technologies Inc. has completed the geotechnical evaluation for the waste water treatment plant upgrades and new wastewater pipeline to be located in Jerome, Arizona. This study was performed in general accordance with our proposal number 2522PW253 dated June 15, 2022. The results of our study, including the boring/test pit location diagrams, laboratory test results, boring/test pit logs, and the geotechnical recommendations are attached.

We have appreciated being of service to you in the geotechnical engineering phase of this project and are prepared to assist you during the construction phases as well. If design conditions change, or if you have any questions concerning this report or any of our testing, inspection, design and consulting services, please do not hesitate to contact us. We look forward to working with you on future projects.

Sincerely,
WESTERN TECHNOLOGIES, INC.
Geotechnical Engineering Services

Gregory L. E. Burr, R.G., E.I.T.
Director of Geotechnical Services

Copies to: Addressee (emailed)

TABLE OF CONTENTS

1.0 PURPOSE 1

2.0 PROJECT DESCRIPTION 1

3.0 SCOPE OF SERVICES 2
3.1 Field Exploration 2
3.2 Laboratory Analyses 2
3.3 Analyses and Report 3

4.0 SITE CONDITIONS 3
4.1 Surface 3
4.2 Subsurface 4

5.0 GEOTECHNICAL PROPERTIES 4

6.0 RECOMMENDATIONS 4
6.1 General 4
6.2 Design Considerations 5
6.3 Tank Foundations 5
6.4 Manhole Foundations 6
6.5 Lateral Design Criteria for Thrust Blocks 6
6.6 Conventional Spread Footings 6
6.7 Lateral Design Criteria 7
6.8 Seismic Considerations 8
6.9 Slab-on-Grade Support 9
6.10 Drainage 10
6.11 Aggregate-Surfaced Roadways 10
6.12 Corrosivity 10

7.0 EARTHWORK 11
7.1 General 11
7.2 Site Clearing 11
7.3 Excavation 11
7.4 Tank Pad Preparation 12
7.5 Spread Footing Foundation Preparation 12
7.6 Slab-on-Grade Preparation 12
7.7 Exterior Slab Preparation 13
7.8 Materials 14
7.9 Placement and Compaction 15
7.10 Compliance 16

8.0 ADDITIONAL SERVICES 16

9.0 LIMITATIONS 17

10.0 CLOSURE 17

TABLE OF CONTENTS (Continued)

TEST PIT/BORING LOCATION DIAGRAMS ..... Plates 1 and 2

APPENDIX A
Definition of Terminology A-1
Method of Soil Classification A-2
Test Pit/Boring Log Notes A-3
Test Pit/Boring Logs ..... A-4 to A-16

APPENDIX B
Laboratory Tests ..... B-1 to B-5

GEOTECHNICAL EVALUATION
JEROME WWTP UPGRADES
JEROME, ARIZONA
JOB NO. 2522JW197

1.0 PURPOSE

This report contains the results of our geotechnical evaluation for the proposed WWTP upgrades and new wastewater pipeline to be located at the existing wastewater treatment plant in Jerome, Arizona. The purpose of these services is to provide information and recommendations regarding:

- foundation design parameters
- slab-on-grade
- lateral earth pressures
- excavation conditions
- earthwork, including backfill placement, and suitability of existing soils for backfill materials
- drainage
- corrosivity
- on-site aggregate surfacing

Results of the field exploration, field tests, and laboratory testing program are presented in the Appendices.

2.0 PROJECT DESCRIPTION

Based on the revised information provided by Ms. Andrea Jaycox, Senior Project Coordinator, the proposed project will consist of approximately 2,400 linear feet of wastewater line, a new SBR Package Plant, and new primary settling and headworks tanks. The structures will be concrete and/or masonry construction with slab-on-grade floors. Maximum wall and column loads for the structures are assumed to be 3 kips per linear foot and 45 kips, respectively. The wastewater line invert elevations will be a maximum of 10 feet below the lowest existing site grades. We anticipate no extraordinary slab-on-grade criteria and that the finished structure bottom levels will be within about 2 to 3 feet of the existing site grades. In addition, approximately 2,000 linear feet of the existing access road will be resurfaced, widened, and additional pull-outs will be constructed. Should any of our information or assumptions not be correct, we request that the Client notify WT immediately.

3.0 SCOPE OF SERVICES

3.1 Field Exploration

Seven test pits and six borings were excavated/hand-auger drilled to depths of about 1 to 8 feet below the existing site grades at the approximate locations shown on the attached test pit/boring location diagrams. In addition, two samples of on-site rock were obtained for unit weight and unconfined compressive strength testing.

Logs of the test pits/borings are presented in Appendix A. Subsoils encountered during excavating/drilling were examined visually and sampled at selected depth intervals. A field log was prepared for each test pit/boring. These logs contain visual classifications of the materials encountered during excavation/drilling as well as interpolation of the subsurface conditions between samples. Final logs, included in Appendix A, represent our interpretation of the field logs and include modifications based on laboratory observations and tests of the field samples.

The final logs describe the materials encountered, their thicknesses, and the locations where samples were obtained. The Unified Soil Classification System was used to classify soils. The soil classification symbols appear on the test pit/boring logs and are briefly described in Appendix A. Local and regional geologic characteristics were used to estimate the seismic design criteria.

3.2 Laboratory Analyses

Laboratory analyses were performed on representative samples to aid in material classification and to estimate pertinent engineering properties of the on-site materials for preparation of this report. Testing was performed in general accordance with applicable ASTM and Arizona methods. The following tests were performed and the results are presented in Appendix B.

- Water content
- Dry density
- Remolded expansion potential
- Maximum density/optimum moisture
- Gradation
- Plasticity
- Soluble salts/sulfates/chlorides

- Corrosivity (ASTM A674)
- Unconfined compressive strength (rock)
- Unit weight (rock)

Test results were utilized in the development of the recommendations contained in this report.

3.3 Analyses and Report

This geotechnical engineering report includes a description of the project, a discussion of the field and laboratory testing programs, a discussion of the subsurface conditions, and design recommendations as appropriate to the purpose. The scope of services for this project does not include, either specifically or by implication, any environmental assessment of the site, discovery of underground storage tanks or other underground structures, or identification of contaminated or hazardous materials or conditions. If there is concern about the potential for such contamination, other studies should be undertaken. We are available to discuss the scope of such studies with you.

4.0 SITE CONDITIONS

4.1 Surface

At the time of our field exploration, the site was a developed wastewater treatment plant. The exteriors of existing structures appeared to be in good to fair condition. The site is bordered on the east by the existing aggregate surfaced access road to the plant, and on all other sides by northeast-southwest oriented Bitter Creek that is about 50 to 100 feet wide and 20 to 30 feet deep that directs flow to the northeast. The ground surface was relatively flat in the developed portions of the site, steep to very steep surrounding the developed areas, and contained a sparse to moderate growth of native juniper trees, bushes, cacti, grasses and weeds. Surface drainage appeared to be fair to poor with some evidence of previous surface water ponding in the developed portions of the site, and good in the undeveloped portions of the site by means of surface sheet flow to the west and north down the existing slopes into Bitter Creek.

4.2 Subsurface

As presented on the test pit/boring logs, surface and subsoils extending to the full depth of exploration at all locations explored consisted of medium to near-high plasticity Clayey SANDS with variable amounts of gravel, Clayey GRAVELS with variable amounts of sand and non-plastic Silty GRAVELS with variable amounts of sand. All soils encountered contained random amounts of limestone cobbles and boulders. Refusal to excavator/auger penetration occurred in all test pits/borings at depths of about 1 to 8 feet on LIMESTONE or limestone cobbles and boulders. Groundwater was not encountered in any test pit/boring at the time of exploration. The logs in Appendix A show details of the subsurface conditions encountered during the field exploration.

The test pit/boring logs included in this report are indicators of subsurface conditions only at the specific location and date noted. Variations from the field conditions represented by the test pits/borings may become evident during construction. If variations appear, we should be contacted to re-evaluate our recommendations.

5.0 GEOTECHNICAL PROPERTIES

Near-surface soils range from non-plastic to near-high plasticity. The site soils exhibit moderate expansion potential when recompacted, confined by loads approximating floor loads and saturated in accordance with standard Arizona test methods. Slabs-on-grade supported on recompacted native soils have a moderate potential for heaving if the water content of the soil increases. The site soils were too granular to obtain samples suitable for compression testing. Two samples of the on-site rock were obtained for unit weight and unconfined compressive strength testing and the results are present in Appendix B.

6.0 RECOMMENDATIONS

6.1 General

Recommendations contained in this report are based on our understanding of the project criteria described in Section 2.0, **PROJECT DESCRIPTION**, and the assumption that the soil and subsurface conditions are those disclosed by the test pits/borings. Others may change the plans, final elevations, number and type of structures, foundation loads, and tank bottom levels during design or construction. Substantially different subsurface conditions

from those described herein may be encountered or become known. Any changes in the project criteria or subsurface conditions shall be brought to our attention in writing.

6.2 Design Considerations

Existing fill was not encountered in the test pits/borings, but was observed on the site. We understand that no documentation is available regarding any field density testing that may have been performed during fill construction. Based on this lack of documentation and the overall condition of the fill observed, we consider the fill to be uncontrolled and recommend removal of existing fill in all structural areas.

Several of the test pits/borings indicate the presence of medium to near-high plasticity clayey soils on the site. These soils will expand or swell with an increase in moisture content. The structures and related improvements situated on expansive soils will be subject to movements if the foundation soils experience an increase in moisture content. It should be understood that if moisture penetrates expansive soils, there will likely be heave and possible resultant cracking/distress of the proposed structures and related improvements. It should be noted that shallow foundation systems are not designed to resist soil movements resulting from sewer or plumbing leaks, excessive or leaking irrigation systems, poor drainage, or water ponding near the structures. Construction of site fences, screen walls and other miscellaneous improvements such as exterior slabs-on-grade that typically fall under building code guidelines will be susceptible to heave as well.

Cobbles and boulders were encountered in the test pits/borings. These oversized materials, greater than 3 inches, could present construction difficulties for foundation, utility trenches and other excavations. In cut areas and excavations, exposed oversized materials should be removed.

6.3 Tank Foundations

Above-ground tanks may be supported on compacted aggregate underlain by a minimum thickness of 1 foot of site soils removed and replaced with properly compacted, imported engineered fill material. Below-ground tanks may be supported on scarified and recompacted native soils. Any existing fill should be removed in all proposed tank areas. The tank pads, prepared as recommended in the **EARTHWORK** section of the report, will be suitable to support a maximum dead plus live-load pressure of up to 3000 pounds per square foot. We anticipate that total and differential movements of the proposed above-ground tank structures, supported as recommended, should be within tolerable limits of

the tank manufacturer, typically uniform settlement of less than 2 inches and differential settlement less than 0.5-inch per 32 feet of circumference. Total and differential movements of the proposed below-ground tank structures, supported as recommended, are anticipated to be 1 inch and 3/4 inch, respectively. Additional foundation movements could occur if water from any source infiltrates the foundation soils. Therefore, proper drainage should be provided in the final design and during construction.

We recommend that the geotechnical engineer or his representative observe the tank pad preparation. It should be determined whether the materials exposed are similar to those anticipated for support of the tanks. Any soft, loose or unacceptable materials should be undercut to suitable materials and backfilled with engineered fill material.

6.4 Manhole Foundations

The soils encountered along the alignment are expected to have moderate to high bearing capacity at anticipated manhole foundation depths. Other than removal of any soft, loose, unstable or disturbed materials from beneath manhole foundations, specialized treatment of soils beneath manholes is not anticipated.

6.5 Lateral Design Criteria for Thrust Blocks

For any thrust block design, lateral loads may be resisted using a soil bearing pressure of 2500 pounds per square foot (psf). All fill against or around thrust blocks should be compacted to densities specified herein under **Placement and Compaction**.

6.6 Conventional Spread Footings

If conventional spread footings are used, they should be underlain by a minimum thickness of 1 foot of lean mix (2-sack) concrete backfill. Footings should bear at least 2 feet below the lowest adjacent finished grade. Footings may be designed to impose a maximum dead plus live-load pressure of up to 2500 pounds per square foot.

We anticipate that total movement of the proposed structures, supported as recommended, should be less than 1 inch. Differential movement should be less than ¾ inch. Additional foundation movements could occur if water from any source infiltrates the foundation soils. Therefore, proper drainage should be provided in the final design and during construction.

Finished grade is the lowest adjacent grade for perimeter footings and floor level for interior footings. The design bearing capacity applies to dead loads plus design live load conditions. Recommended minimum widths of column and wall footings are 24 inches and 16 inches, respectively. The bearing value given is a net bearing value and the weight of the concrete in the footings may be ignored.

All footings, stem walls and masonry walls should be reinforced to reduce the potential for distress caused by differential foundation movements. The use of joints at openings or other discontinuities in masonry walls is recommended.

We recommend that the geotechnical engineer or his representative observe the footing excavations before reinforcing steel and concrete are placed. It should be determined whether the soils exposed are similar to those anticipated for support of the footings. Any soft, loose or unacceptable soils should be undercut to suitable materials and backfilled with either lean mix or structural concrete.

6.7 Lateral Design Criteria

For retaining walls located above any free water surface with no surcharge loads, recommended equivalent fluid pressures and coefficients of base friction for unrestrained elements are:

- Active:
  Undisturbed subsoil .....38 psf/ft
  Compacted granular backfill .....30 psf/ft
  Compacted on-site soils (low expansive potential) .....38 psf/ft
  Clayey site soils ..... not recommended for use

- Passive:
  Shallow wall footings .....220 psf/ft
  Shallow column footings.....350 psf/ft
  Dense rock .....500 psf/ft

- Coefficient of base friction
  Soil.....0.35*
  Rock.....0.55

* The coefficient of base friction (soil) should be reduced to 0.25 when used in conjunction with passive pressure.

Where the design includes restrained elements, the following equivalent fluid pressures are recommended:

- At-rest:
  Undisturbed subsoil .....64 psf/ft
  Compacted granular backfill .....55 psf/ft

These lateral earth pressures are not applicable for submerged soils. We should be consulted for additional recommendations if such conditions are to be included in the design. Any surcharge from adjacent loadings must also be considered. Walls below grade should be waterproofed.

We recommend a free-draining soil layer or manufactured geocomposite material, be constructed adjacent to the back of the retaining wall. A filter may be required between the soil backfill and drainage layer. This drainage zone should help prevent hydrostatic pressure buildup. This vertical drain should be tied into a gravity drainage system at the base of the retaining wall. It is important that all backfill be properly placed and compacted. Backfill should be mechanically compacted in layers. Flooding or jetting should not be permitted. Care should be taken not to damage the walls when placing the backfill. Backfills should be inspected and tested during placement.

Fill against footings, stem walls and retaining walls should be compacted to densities specified in **EARTHWORK**. Medium to high plasticity clay soils should not be used as backfill against retaining walls. Compaction of each lift adjacent to walls should be accomplished with hand-operated tampers or other lightweight compactors. Overcompaction may cause excessive lateral earth pressures which could result in wall movements.

6.8 Seismic Considerations

Structures should be designed in accordance with applicable building codes. The seismic design parameters presented in the following table, in accordance with the 2018 International Building Code and ASCE 7-16, are applicable to the project site:

Seismic Design Parameters International Building Code 2018, ASCE 7-16	
Soil Site Class	C
Mapped Spectral Response Acceleration at 0.2 sec period (S_s)	0.31g
Mapped Spectral Response Acceleration at 1.0 sec period (S_1)	0.097g
Site Coefficient for 0.2 sec period (F_a)	1.3
Site Coefficient for 1.0 sec period (F_v)	1.5
Design Spectral Response Acceleration at 0.2 sec period (S_{DS})	0.269g
Design Spectral Response Acceleration at 1.0 sec period (S_{D1})	0.097g

The soil site class is based upon conditions identified in shallow exploratory test pits/borings and local knowledge of the geotechnical conditions in the vicinity of the site. Conditions extending beyond the depth of our test pits/borings to a depth of 100 feet were assumed for the purposes of providing the information presented in the table. Based upon the density of the on-site soils and lack of groundwater, the potential settlement and lateral spread due to liquefaction is not a considered to be a significant concern on the site.

6.9 Slab-on-Grade Support

Slabs-on-grade should be supported on a minimum thickness of 1 foot of properly placed and compacted, imported, low expansive, engineered fill. For design of interior slabs-on-grade, we recommend using a modulus of subgrade reaction (k) of 200 pounds per cubic inch (pci) for the on-site soils and 225 pci for imported fill material, based on a 30-inch diameter plate. The slab subgrade should be prepared by the procedures outlined in this report. A minimum 4-inch thick layer of base course should be provided beneath all slabs to help prevent capillary rise and a damp slab.

All concrete placement and curing operations should follow the American Concrete Institute manual recommendations. Improper curing techniques and/or high slump (water-cement ratio) could cause excessive shrinkage, cracking or curling. The plastic properties of the concrete should be documented at the time of placement and specimens should also be prepared for strength testing to verify compliance with project specifications. Concrete slabs should be allowed to cure adequately before placing vinyl or other moisture sensitive floor covering.

6.10 Drainage

The major cause of soil-related foundation and slab-on-ground problems is moisture increase in soils below structures. Properly functioning conventional foundations and floor slabs-on-ground require appropriately constructed and maintained site drainage conditions. Therefore, it is extremely important that positive drainage be provided during construction and maintained throughout the life of the structures. It is also important that proper planning and control of any landscape and irrigation practices be performed.

Infiltration of water into utility or foundation excavations must be prevented during construction. Backfill against footings, exterior walls, and in utility line trenches should be well compacted and free of all construction debris to minimize the possibility of moisture infiltration. If utility line trenches are backfilled with a granular material, then a clay or concrete plug should be placed in the trench adjacent to the structure to prevent water from following the trench back under the structure.

6.11 Aggregate-Surfaced Roadways

For unpaved sections, we recommend an initial minimum thickness of 6 inches of granular cover material. As with any unbound vehicular section, additional material will be required over time as cover material is lost due to grading, snow plowing, lateral shoving, and intrusion of the cover material into the underlying subgrade soils. To help reduce intrusion, consideration should be given to the use of a geotextile separator fabric placed at the cover material/subgrade soil interface.

6.12 Corrosivity

Based on the laboratory test results, the on-site soils exhibit a low to moderate corrosive potential to ductile iron piping. This information should be used as an aid in choosing the construction materials that will be in contact with these soils and that will need to be resistant to various corrosive forces. Manufacturers' representatives should be contacted regarding the specific corrosivity resistance for their particular product.

The chemical test results indicate that the soils at the site classify as moderately corrosive to concrete, Class S1 in accordance with ACI 318, Table 4.2.1. Concrete should be made with a cement that provides sulfate resistance and that has a maximum water-cementitious materials ratio and minimum compressive strength set forth in the provisions of ACI 318, Section 4.3.

7.0 EARTHWORK

7.1 General

The conclusions contained in this report for the proposed construction are contingent upon compliance with recommendations presented in this section. Any excavating, trenching, or disturbance which occurs after completion of the earthwork must be backfilled, compacted and tested in accordance with the recommendations contained herein. It is not reasonable to rely upon our conclusions and recommendations if any future unobserved and untested trenching, grading or backfilling occurs.

Although underground facilities were not observed, such features might be encountered during construction. These features should be demolished and removed in accordance with the recommendations of the geotechnical engineer. Any loose or disturbed soils resulting from demolition and/or removal of existing facilities should also be removed and/or recompacted as engineered fill, and any excavations should be backfilled in accordance with recommendations presented herein.

7.2 Site Clearing

Strip and remove all existing fill, remaining vegetation, debris, aggregate surfacing and/or concrete pavement and any other deleterious materials from the building, tank and wastewater line area. The building/tank area is defined as that area within the structure footprint plus 5 feet beyond the perimeter of the footprint. All exposed surfaces should be free of mounds and depressions which could prevent uniform compaction.

7.3 Excavation

We anticipate that excavations into the shallow site soils for the proposed construction can be accomplished with conventional equipment. Excavations penetrating the underlying limestone will require the use of heavy-duty, specialized equipment, likely together with large pneumatic hammers, to facilitate rock break-up and removal.

Cut slopes into the shallow on-site soils should be constructed no steeper than 1:1 (horizontal:vertical) and 0.5:1 (horizontal:vertical) in the limestone bedrock. Fill slopes should be constructed no steeper than 1.5:1 (horizontal:vertical) to limit erosion, and to provide slope protection. Natural slopes exceeding a 5:1 (horizontal:vertical) slope

configuration, should be benched prior to fill placement. Natural slopes which will support fill embankments should be benched at a maximum 5:1 slope.

On-site soils will pump or become unworkable at high water contents. Workability may be improved by scarifying and drying. Overexcavation of wet zones and replacement with drier granular materials may be necessary. The use of lightweight excavation and compaction equipment may be required to minimize subgrade pumping.

7.4 Tank Pad Preparation

Following removal of any existing fill material, above-ground tanks should be founded on a minimum thickness of 1 foot of imported, properly compacted, low expansive, engineered fill material. Remove existing soils to a minimum depth of 1 foot below the bottom of the above-ground tank elevation. Following the removal, and immediately below all below-grade tanks, scarify, moisten or dry as required, and compact all subgrade soils to a minimum depth of 8 inches. The subgrade preparation should be accomplished in a manner which will result in uniform water contents and densities after compaction. In areas where dense limestone is encountered, scarification and recompaction is not required.

7.5 Spread Footing Foundation Preparation

Following removal of any existing fill material in footing areas, remove existing soils to a minimum depth of 1 foot below the bottom of the footing. Removal may extend straight down along the sides of the footing. Replace the removed soils with properly consolidated, lean mix (2-sack) concrete backfill material.

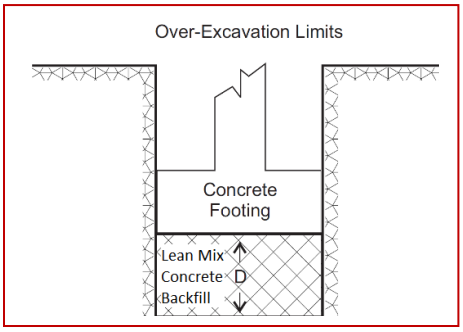

7.6 Slab-on-Grade Preparation

Following removal of any existing fill material, slabs-on-grade should be founded on a minimum thickness of 1 foot of imported, low expansive, engineered fill material. Remove native soils, as necessary, to a minimum depth of 1 foot below the bottom of the slab (depth D in the diagram below). Following the removal, scarify, moisten or dry as required, and compact all subgrade soils to a minimum depth of 8 inches. Replace the removed soils with properly compacted, imported, low to non-expansive, engineered fill material. The

aggregate base course below the slab may be included as part of the low to non-expansive engineered fill. In areas where dense limestone is encountered, scarification and recompaction is not required.

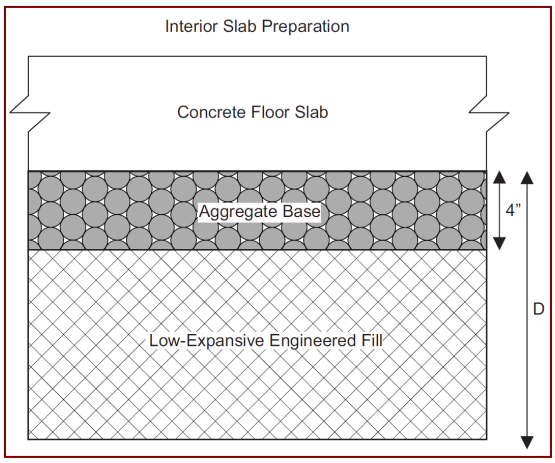

The subgrade preparation should be accomplished in a manner that will result in uniform water contents and densities after compaction.

7.7 Exterior Slab Preparation

The soils on this site have the potential to expand and shrink with changes in moisture content. In addition, frost penetration in the upper soils may cause surface heaving. Therefore, relatively lightweight exterior concrete flatwork such as sidewalks and patios may experience movements resulting in cracking or vertical offsets. To reduce the potential for damage, we recommend:

- Use of fill with low expansion potential
- Use of fill with low to negligible frost susceptibility
- Placement of effective control joints on relatively close centers
- Moisture-density control during placement of subbase fills
- Provision for adequate drainage in areas adjoining the slabs
- Use of designs which allow vertical movement between the exterior slabs and adjoining structural elements

It should be understood that these recommendations will help reduce the potential for soil movement and resulting distress, but will not eliminate this potential. Furthermore, the use of municipal specifications and details may not mitigate the potential for movements of the expansive or frost susceptible on-site soils.

7.8 Materials

a. Clean on-site native soils with a maximum dimension of 6 inches or imported materials may be used as fill material for the following:

- backfill (non-slab areas)
- Subbase fill in aggregate surfaced roadway areas

b. On-site clayey soils should not be used as subbase fill or backfill below any tanks, foundations, slabs-on-grade or behind any retaining walls. Imported soils with low expansive potential should be used in these areas.

c. Frozen soils should not be used as fill or backfill.

d. Lean mix (2-sack) concrete backfill should consist of aggregate base course type material combined with 2 sacks of cement per cubic yard. A coarse rock mix should not be used.

e. Imported soils should conform to the following:

- Gradation (ASTM C136): percent finer by weight

6"	100
4"	85-100
¾"	70-100
No. 4 Sieve	50-100
No. 200 Sieve	40 (max)

- Maximum expansive potential (%)[1] 1.5

- Maximum soluble sulfates (%) 0.10

f. Base course should conform to current Yavapai County specifications.

[1] Measured on a sample compacted to approximately 95 percent of the ASTM D698 maximum dry density at about 3 percent below optimum water content. The sample is confined under a 100 psf surcharge and submerged.

7.9 Placement and Compaction

a. Place and compact fill in horizontal lifts, using equipment and procedures that will produce recommended water contents and densities throughout the lift.

b. Uncompacted fill lifts should not exceed 8 inches.

c. Materials should be compacted to the following:

Material	Minimum Percent Compaction (ASTM D698)
• On-site soil, reworked:	
Below tanks	95
Below slabs-on-grade	90
Aggregate surfaced roadway areas	95
• On-site clayey soils, fill:	
Aggregate surfaced roadway areas	95
Landscape areas	85
• On-site low expansive potential soils, fill:	
Aggregate surfaced roadway areas	95
Below slabs-on-grade	95
Below tanks	95
• Imported soil, fill:	
Below slabs-on-grade	95
Below tanks	95
Aggregate surfaced roadway areas	95
• Aggregate base:	
Below slabs-on-grade	95
Below tanks	95
Aggregate surfaced roadway areas	100

Minimum Percent
Material Compaction (ASTM D698)

- Backfill:
  Structural 95
  Nonstructural 90

d. On-site soils should be compacted with a moisture content in the range of 1 percent below to 3 percent above optimum. Imported soils with low expansive potential and aggregate base course materials should be compacted with a moisture content in the range of 3 percent below to 3 percent above optimum.

7.10 Compliance

Recommendations for structural elements supported on compacted fills or prepared subgrade depend upon compliance with **EARTHWORK** recommendations. To assess compliance, observation and testing should be performed under the direction of a geotechnical engineer.

8.0 ADDITIONAL SERVICES

The recommendations provided in this report are based on the assumption that a sufficient schedule of tests and observations will be performed during construction to verify compliance. At a minimum, these tests and observations should be comprised of the following:

- Observations and testing during site preparation and earthwork;
- Observation of foundation excavations; and
- Consultation as may be required during construction.

Retaining the geotechnical engineer who developed your report to provide construction observation is the best way to verify compliance, and to help you manage the risks associated with unanticipated conditions.

9.0 LIMITATIONS

This report has been prepared assuming the project criteria described in Section 2.0. If changes in the project criteria occur, or if different subsurface conditions are encountered or become known, the conclusions and recommendations presented herein shall become invalid. In any such event, WT should be contacted in order to assess the effect that such variations may have on our conclusions and recommendations.

The recommendations presented are based entirely upon data derived from a limited number of samples obtained from widely spaced test pits/borings. The attached logs are indicators of subsurface conditions only at the specific locations and times noted. This report assumes the uniformity of the geology and soil structure between test pits/borings, however variations can and often do exist. Whenever any deviation, difference or change is encountered or becomes known, WT should be contacted.

This report is for the exclusive benefit of our client alone. There are no intended third-party beneficiaries of our contract with the client or this report, and nothing contained in the contract or this report shall create any express or implied contractual or any other relationship with, or claim or cause of action for, any third party against WT.

This report is valid for the earlier of one year from the date of issuance, a change in circumstances, or discovered variations. After expiration, no person or entity shall rely on this report without the express written authorization of WT.

10.0 CLOSURE

We prepared this report as an aid to the designers of the proposed project. The comments, statements, recommendations and conclusions set forth in this report reflect the opinions of the authors. These opinions are based upon data obtained at the location of the test pits/borings, and from laboratory tests. Work on your project was performed in accordance with generally accepted standards and practices utilized by professionals providing similar services in this locality. No other warranty, express or implied, is made.

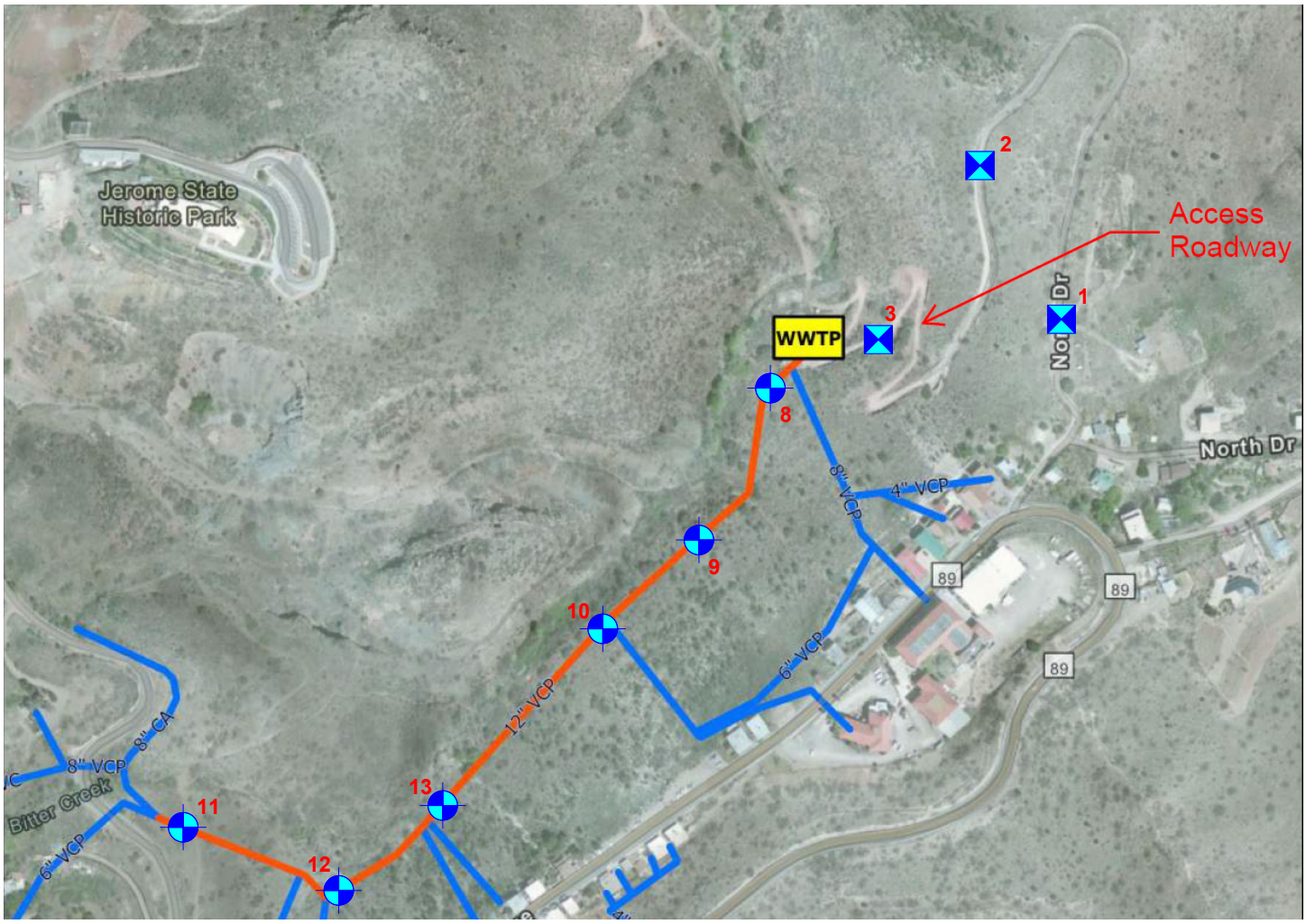

Not to Scale

Approximate Hand Auger Boring Location

Approximate Test Pit Location

JEROME WWTP UPGRADES	
Boring/Test Pit Location Diagram	
Western Technologies Inc.	
Job No.: 2522JW197	Plate: 1

Geotechnical Environmental Inspections Materials

Western Technologies Inc.
The Quality People
Since 1955

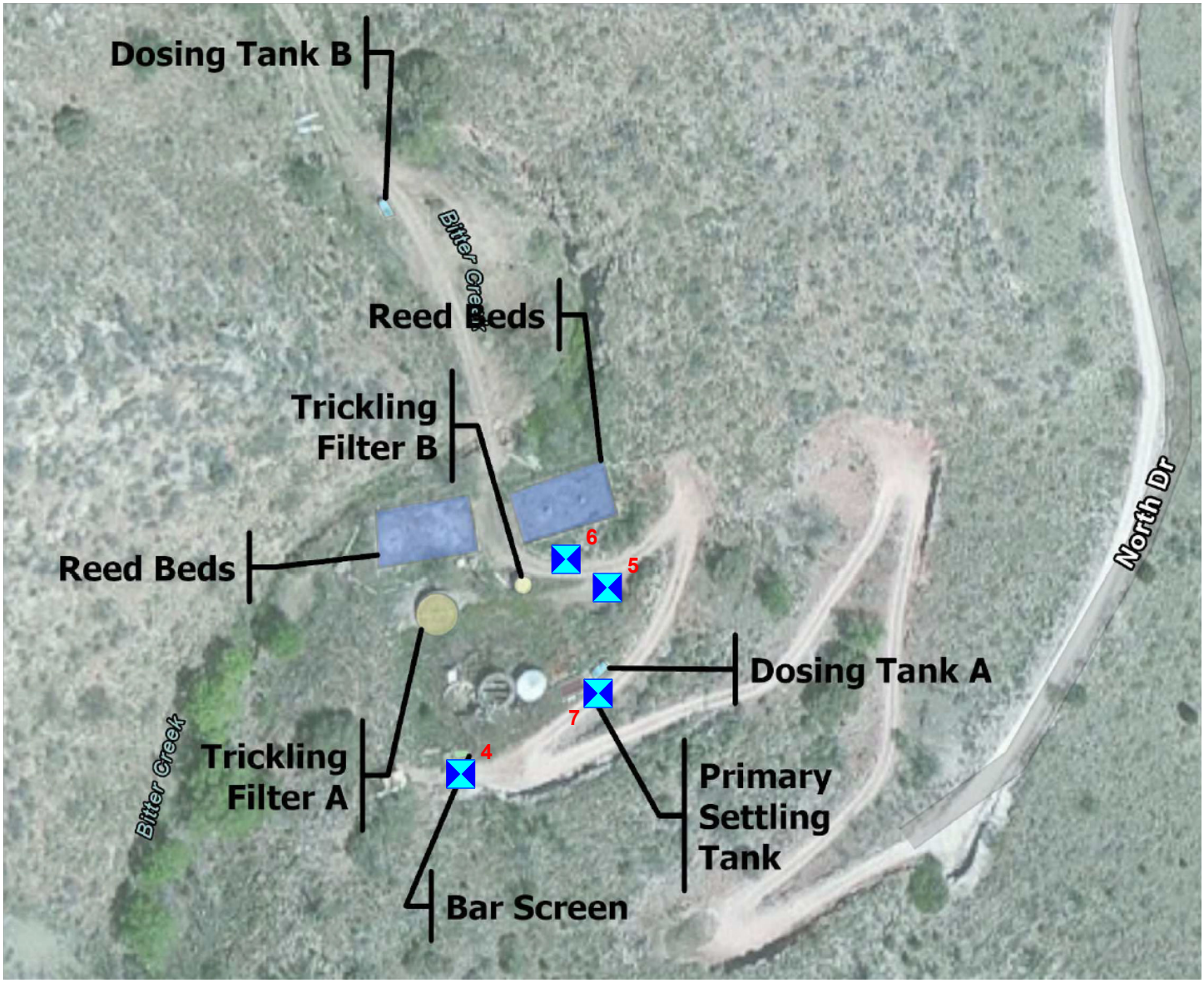

Not to Scale

Approximate Test Pit Location

JEROME WWTP UPGRADES	
Test Pit Location Diagram	
Western Technologies Inc.	
Job No.: 2522JW197	Plate: 2

Geotechnical
Environmental
Inspections
Materials

Western Technologies Inc.
The Quality People
Since 1955

Allowable Soil Bearing Capacity	The recommended maximum contact stress developed at the interface of the foundation element and the supporting material.
Backfill	A specified material placed and compacted in a confined area.
Base Course	A layer of specified aggregate material placed on a subgrade or subbase.
Base Course Grade	Top of base course.
Bench	A horizontal surface in a sloped deposit.
Caisson/Drilled Shaft	A concrete foundation element cast in a circular excavation which may have an enlarged base (or belled caisson).
Concrete Slabs-On-Grade	A concrete surface layer cast directly upon base course, subbase or subgrade.
Crushed Rock Base Course	A base course composed of crushed rock of a specified gradation.
Differential Settlement	Unequal settlement between or within foundation elements of a structure.
Engineered Fill	Specified soil or aggregate material placed and compacted to specified density and/or moisture conditions under observations of a representative of a soil engineer.
Existing Fill	Materials deposited through the action of man prior to exploration of the site.
Existing Grade	The ground surface at the time of field exploration.
Expansive Potential	The potential of a soil to expand (increase in volume) due to absorption of moisture.
Fill	Materials deposited by the actions of man.
Finished Grade	The final grade created as a part of the project.
Gravel Base Course	A base course composed of naturally occurring gravel with a specified gradation.
Heave	Upward movement.
Native Grade	The naturally occurring ground surface.
Native Soil	Naturally occurring on-site soil.
Rock	A natural aggregate of mineral grains connected by strong and permanent cohesive forces. Usually requires drilling, wedging, blasting or other methods of extraordinary force for excavation.
Sand and Gravel Base Course	A base course of sand and gravel of a specified gradation.
Sand Base Course	A base course composed primarily of sand of a specified gradation.
Scarify	To mechanically loosen soil or break down existing soil structure.
Settlement	Downward movement.
Soil	Any unconsolidated material composed of discrete solid particles, derived from the physical and/or chemical disintegration of vegetable or mineral matter, which can be separated by gentle mechanical means such as agitation in water.
Strip	To remove from present location.
Subbase	A layer of specified material placed to form a layer between the subgrade and base course.
Subbase Grade	Top of subbase.
Subgrade	Prepared native soil surface.

©81WTI 091614

COARSE-GRAINED SOILS

LESS THAN 50% FINES

GROUP SYMBOLS	DESCRIPTION	MAJOR DIVISIONS
GW	WELL-GRADED GRAVEL OR WELL-GRADED GRAVEL WITH SAND, LESS THAN 5% FINES	GRAVELS MORE THAN HALF OF COARSE FRACTION IS LARGER THAN NO. 4 SIEVE SIZE
GP	POORLY-GRADED GRAVEL OR POORLY-GRADED GRAVEL WITH SAND, LESS THAN 5% FINES	
GM	SILTY GRAVEL OR SILTY GRAVEL WITH SAND, MORE THAN 12% FINES	
GC	CLAYEY GRAVEL OR CLAYEY GRAVEL WITH SAND, MORE THAN 12% FINES	
SW	WELL-GRADED SAND OR WELL-GRADED SAND WITH GRAVEL, LESS THAN 5% FINES	SANDS MORE THAN HALF OF COARSE FRACTION IS SMALLER THAN NO. 4 SIEVE SIZE
SP	POORLY-GRADED SAND OR POORLY-GRADED SAND WITH GRAVEL, LESS THAN 5% FINES	
SM	SILTY SAND OR SILTY SAND WITH GRAVEL, MORE THAN 12% FINES	
SC	CLAYEY SAND OR CLAYEY SAND WITH GRAVEL, MORE THAN 12% FINES	

NOTE: Coarse-grained soils receive dual symbols if they contain 5% to 12% fines (e.g., SW-SM, GP-GC).

FINE-GRAINED SOILS

MORE THAN 50% FINES

GROUP SYMBOLS	DESCRIPTION	MAJOR DIVISIONS
ML	SILT, SILT WITH SAND OR GRAVEL, SANDY SILT, OR GRAVELLY SILT	SILTS AND CLAYS LIQUID LIMIT LESS THAN 50
CL	LEAN CLAY OF LOW TO MEDIUM PLASTICITY, SANDY CLAY, OR GRAVELLY CLAY	
OL	ORGANIC SILT OR ORGANIC CLAY OF LOW TO MEDIUM PLASTICITY	
MH	ELASTIC SILT, SANDY ELASTIC SILT, OR GRAVELLY ELASTIC SILT	SILTS AND CLAYS LIQUID LIMIT MORE THAN 50
CH	FAT CLAY OF HIGH PLASTICITY, SANDY FAT CLAY, OR GRAVELLY FAT CLAY	
OH	ORGANIC SILT OR ORGANIC CLAY OF HIGH PLASTICITY	
PT	PEAT AND OTHER HIGHLY ORGANIC SOILS	HIGHLY ORGANIC SOILS

NOTE: Fine-grained soils may receive dual classification based upon plasticity characteristics (e.g. CL-ML).

SOIL SIZES

COMPONENT	SIZE RANGE
BOULDERS	Above 12 in.
COBBLES	3 in. – 12 in.
GRAVEL	No. 4 – 3 in.
Coarse	¾ in. – 3 in.
Fine	No. 4 – ¾ in.
SAND	No. 200 – No. 4
Coarse	No. 10 – No. 4
Medium	No. 40 – No. 10
Fine	No. 200 – No. 40
Fines (Silt or Clay)	Below No. 200

NOTE: Only sizes smaller than three inches are used to classify soils

CONSISTENCY

CLAYS & SILTS	BLOWS PER FOOT
VERY SOFT	0 – 2
SOFT	3 – 4
FIRM	5 – 8
STIFF	9 – 15
VERY STIFF	16 – 30
HARD	OVER 30

RELATIVE DENSITY

SANDS & GRAVELS	BLOWS PER FOOT
VERY LOOSE	0 – 4
LOOSE	5 – 10
MEDIUM DENSE	11 – 30
DENSE	31 – 50
VERY DENSE	OVER 50

NOTE: Number of blows using 140-pound hammer falling 30 inches to drive a 2-inch-OD (1⅜-inch ID) split-barrel sampler (ASTM D1586).

PLASTICITY OF FINE GRAINED SOILS

PLASTICITY INDEX	TERM
0	NON-PLASTIC
1 – 7	LOW
8 – 20	MEDIUM
Over 20	HIGH

DEFINITION OF WATER CONTENT

DRY
SLIGHTLY DAMP
DAMP
MOIST
WET
SATURATED

©81 WTI
090414

The number shown in **"BORING NO."** or "**TEST PIT NO.**" refers to the approximate location of the same number indicated on the "Boring/Test Pit Location Diagram" as positioned in the field by pacing or measurement from property lines and/or existing features.

"DRILLING TYPE" refers to the exploratory equipment used in the boring. Hand auger methods were used. The dimension presented is the outside diameter of the auger used.

"EQUIPMENT TYPE" refers to the equipment used in the excavation of the test pit, and may include the width of the bucket on the excavator and the use of "rock" teeth or attachments.

"SAMPLE TYPE" refers to the form of sample recovery, in which **R** = Ring-lined sample, **G** = Grab sample.

"DRY DENSITY (LBS/CU FT)" refers to the laboratory-determined dry density in pounds per cubic foot. The symbol **"NR"** indicates that no sample was recovered.

"WATER (MOISTURE) CONTENT (% OF DRY WT.)" refers to the laboratory-determined water content in percent using the standard test method ASTM D2216.

"USCS" refers to the "Unified Soil Classification System" Group Symbol for the soil type as defined by ASTM D2487 and D2488. The soils were classified visually in the field, and where appropriate, classifications were modified by visual examination of samples in the laboratory and/or by appropriate tests.

These notes and boring/test pit logs are intended for use in conjunction with the purposes of our services defined in the text. Boring/test pit log data should not be construed as part of the construction plans nor as defining construction conditions.

Boring/test pit logs depict our interpretations of subsurface conditions at the locations and on the date(s) noted. Variations in subsurface conditions and characteristics may occur between borings/test pits. Groundwater levels may fluctuate due to seasonal variations and other factors.

The stratification lines shown on the boring/test pit logs represent our interpretation of the approximate boundary between soil or rock types based upon visual field classification at the boring/test pit location. The transition between materials is approximate and may be more or less gradual than indicated.

©81WTI
091614

DATE EXCAVATED: **9-16-22**
LOCATION: **See Location Diagram**
ELEVATION: **Not Determined**

TEST PIT NO. 1

EQUIPMENT: **CASE 580N**
EXCAVATION TYPE: **24" BUCKET**
FIELD ENGINEER: **C. Bartlett**

MOISTURE CONTENT (% OF DRY WT.)	DRY DENSITY (LBS/CU FT)	SAMPLE TYPE	SAMPLE	BLOWS/FT.	DEPTH (FEET)	USCS	GRAPHIC	SOIL DESCRIPTION
		G				GM		AGGREGATE BASE COURSE (3 Inches Thick) Silty GRAVEL; with sand, cobbles and boulders, tan, slightly damp
					5			**Excavation Stopped at 5 Feet**
					10			

N- **STANDARD PENETRATION TEST**
R- **RING SAMPLE**
C- **CORE: %RECOVERY/RQD**
G- **GRAB SAMPLE**
B- **BUCKET SAMPLE**

NOTES: **Groundwater Not Encountered**

THIS SUMMARY APPLIES ONLY AT THIS LOCATION AND AT THE TIME OF LOGGING. CONDITIONS MAY DIFFER AT OTHER LOCATIONS AND MAY CHANGE AT THIS LOCATION WITH TIME. DATA PRESENTED IS A SIMPLIFICATION.

Geotechnical Environmental Inspections Materials

Western Technologies Inc.
The Quality People
Since 1955

PROJECT: **JEROME WWTP IMPROVEMENTS**
PROJECT NO.: **2522JW197**

PLATE **A-4**

TEST PIT LOG

DATE EXCAVATED: **9-16-22**
LOCATION: **See Location Diagram**
ELEVATION: **Not Determined**

TEST PIT NO. 2

EQUIPMENT: **CASE 580N**
EXCAVATION TYPE: **24" BUCKET**
FIELD ENGINEER: **C. Bartlett**

MOISTURE CONTENT (% OF DRY WT.)	DRY DENSITY (LBS/CU FT)	SAMPLE TYPE	SAMPLE	BLOWS/FT.	DEPTH (FEET)	USCS	GRAPHIC	SOIL DESCRIPTION
		G				SC		Clayey SAND; with gravel, cobbles and boulders, tan, slightly damp
4.4	87	R		Push				
					5			**Excavation Stopped at 5 Feet**
					10			

N- **STANDARD PENETRATION TEST**
R- **RING SAMPLE**
C- **CORE: %RECOVERY/RQD**
G- **GRAB SAMPLE**
B- **BUCKET SAMPLE**

NOTES: **Groundwater Not Encountered**

THIS SUMMARY APPLIES ONLY AT THIS LOCATION AND AT THE TIME OF LOGGING. CONDITIONS MAY DIFFER AT OTHER LOCATIONS AND MAY CHANGE AT THIS LOCATION WITH TIME. DATA PRESENTED IS A SIMPLIFICATION.

Geotechnical Environmental Inspections Materials

Western Technologies Inc.
The Quality People
Since 1955

PROJECT: **JEROME WWTP IMPROVEMENTS**
PROJECT NO.: **2522JW197**

PLATE **A-5**

TEST PIT LOG

DATE EXCAVATED: **9-16-22**
LOCATION: **See Location Diagram**
ELEVATION: **Not Determined**

TEST PIT NO. 3

EQUIPMENT: **CASE 580N**
EXCAVATION TYPE: **24" BUCKET**
FIELD ENGINEER: **C. Bartlett**

MOISTURE CONTENT (% OF DRY WT.)	DRY DENSITY (LBS/CU FT)	SAMPLE TYPE	SAMPLE	BLOWS/FT.	DEPTH (FEET)	USCS	GRAPHIC	SOIL DESCRIPTION
		G				GC		Clayey GRAVEL; with sand, cobbles and boulders, tan, slightly damp
3.4	99	R		Push				
					5			**Excavation Stopped at 5 Feet**
					10			

N- **STANDARD PENETRATION TEST**
R- **RING SAMPLE**
C- **CORE: %RECOVERY/RQD**
G- **GRAB SAMPLE**
B- **BUCKET SAMPLE**

NOTES: **Groundwater Not Encountered**

THIS SUMMARY APPLIES ONLY AT THIS LOCATION AND AT THE TIME OF LOGGING. CONDITIONS MAY DIFFER AT OTHER LOCATIONS AND MAY CHANGE AT THIS LOCATION WITH TIME. DATA PRESENTED IS A SIMPLIFICATION.

Geotechnical Environmental Inspections Materials

Western Technologies Inc.
The Quality People
Since 1955

PROJECT: **JEROME WWTP IMPROVEMENTS**
PROJECT NO.: **2522JW197**

PLATE **A-6**

TEST PIT LOG

DATE EXCAVATED: **9-16-22**
LOCATION: **See Location Diagram**
ELEVATION: **Not Determined**

TEST PIT NO. 4

EQUIPMENT: **CASE 580N**
EXCAVATION TYPE: **24" BUCKET**
FIELD ENGINEER: **C. Bartlett**

MOISTURE CONTENT (% OF DRY WT.)	DRY DENSITY (LBS/CU FT)	SAMPLE TYPE	SAMPLE	BLOWS/FT.	DEPTH (FEET)	USCS	GRAPHIC	SOIL DESCRIPTION
		G				GC		Clayey GRAVEL; with sand, cobbles and boulders, light brown, slightly damp
					5			**Excavator Refusal at 3 Feet on LIMESTONE**
					10			

N- **STANDARD PENETRATION TEST**
R- **RING SAMPLE**
C- **CORE: %RECOVERY/RQD**
G- **GRAB SAMPLE**
B- **BUCKET SAMPLE**

NOTES: **Groundwater Not Encountered**

Geotechnical Environmental Inspections Materials

Western Technologies Inc.
The Quality People
Since 1955

PROJECT: **JEROME WWTP IMPROVEMENTS**
PROJECT NO.: **2522JW197**

PLATE **A-7**

TEST PIT LOG

THIS SUMMARY APPLIES ONLY AT THIS LOCATION AND AT THE TIME OF LOGGING. CONDITIONS MAY DIFFER AT OTHER LOCATIONS AND MAY CHANGE AT THIS LOCATION WITH TIME. DATA PRESENTED IS A SIMPLIFICATION.

DATE EXCAVATED: **9-16-22**
LOCATION: **See Location Diagram**
ELEVATION: **Not Determined**

TEST PIT NO. 5

EQUIPMENT: **CASE 580N**
EXCAVATION TYPE: **24" BUCKET**
FIELD ENGINEER: **C. Bartlett**

MOISTURE CONTENT (% OF DRY WT.)	DRY DENSITY (LBS/CU FT)	SAMPLE TYPE	SAMPLE	BLOWS/FT.	DEPTH (FEET)	USCS	GRAPHIC	SOIL DESCRIPTION
		G				GC		Clayey GRAVEL; with sand, cobbles and boulders, brown, damp
					5			
					10			**Excavator Refusal at 8 Feet on LIMESTONE**

N- **STANDARD PENETRATION TEST**
R- **RING SAMPLE**
C- **CORE: %RECOVERY/RQD**
G- **GRAB SAMPLE**
B- **BUCKET SAMPLE**

NOTES: **Groundwater Not Encountered**

THIS SUMMARY APPLIES ONLY AT THIS LOCATION AND AT THE TIME OF LOGGING. CONDITIONS MAY DIFFER AT OTHER LOCATIONS AND MAY CHANGE AT THIS LOCATION WITH TIME. DATA PRESENTED IS A SIMPLIFICATION.

Geotechnical Environmental Inspections Materials

Western Technologies Inc.
The Quality People
Since 1955

PROJECT: **JEROME WWTP IMPROVEMENTS**
PROJECT NO.: **2522JW197**

PLATE **A-8**

TEST PIT LOG

DATE EXCAVATED: **9-16-22**
LOCATION: **See Location Diagram**
ELEVATION: **Not Determined**

TEST PIT NO. 6

EQUIPMENT: **CASE 580N**
EXCAVATION TYPE: **24" BUCKET**
FIELD ENGINEER: **C. Bartlett**

MOISTURE CONTENT (% OF DRY WT.)	DRY DENSITY (LBS/CU FT)	SAMPLE TYPE	SAMPLE	BLOWS/FT.	DEPTH (FEET)	USCS	GRAPHIC	SOIL DESCRIPTION
		G			0	GC		Clayey GRAVEL; with sand, cobbles and boulders, brown, damp
					5			
					8			**Excavator Refusal at 8 Feet on LIMESTONE**
					10			

THIS SUMMARY APPLIES ONLY AT THIS LOCATION AND AT THE TIME OF LOGGING. CONDITIONS MAY DIFFER AT OTHER LOCATIONS AND MAY CHANGE AT THIS LOCATION WITH TIME. DATA PRESENTED IS A SIMPLIFICATION.

N- **STANDARD PENETRATION TEST**
R- **RING SAMPLE**
C- **CORE: %RECOVERY/RQD**
G- **GRAB SAMPLE**
B- **BUCKET SAMPLE**

NOTES: **Groundwater Not Encountered**

Geotechnical Environmental Inspections Materials

Western Technologies Inc.
The Quality People
Since 1955

PROJECT: **JEROME WWTP IMPROVEMENTS**
PROJECT NO.: **2522JW197**

PLATE **A-9**

TEST PIT LOG

DATE EXCAVATED: **9-16-22**
LOCATION: **See Location Diagram**
ELEVATION: **Not Determined**

TEST PIT NO. 7

EQUIPMENT: **CASE 580N**
EXCAVATION TYPE: **24" BUCKET**
FIELD ENGINEER: **C. Bartlett**

MOISTURE CONTENT (% OF DRY WT.)	DRY DENSITY (LBS/CU FT)	SAMPLE TYPE	SAMPLE	BLOWS/FT.	DEPTH (FEET)	USCS	GRAPHIC	SOIL DESCRIPTION
		G				GC		Clayey GRAVEL; with sand, cobbles and boulders, brown, damp
					5			**Excavator Refusal at 5 Feet on LIMESTONE**
					10			

N- **STANDARD PENETRATION TEST**
R- **RING SAMPLE**
C- **CORE: %RECOVERY/RQD**
G- **GRAB SAMPLE**
B- **BUCKET SAMPLE**

NOTES: **Groundwater Not Encountered**

THIS SUMMARY APPLIES ONLY AT THIS LOCATION AND AT THE TIME OF LOGGING. CONDITIONS MAY DIFFER AT OTHER LOCATIONS AND MAY CHANGE AT THIS LOCATION WITH TIME. DATA PRESENTED IS A SIMPLIFICATION.

Geotechnical Environmental Inspections Materials

Western Technologies Inc.
The Quality People
Since 1955

PROJECT: **JEROME WWTP IMPROVEMENTS**
PROJECT NO.: **2522JW197**

PLATE **A-10**

TEST PIT LOG

DATE DRILLED: **9-16-22**
LOCATION: **See Location Diagram**
ELEVATION: **Not Determined**

BORING NO. 8

EQUIPMENT TYPE: **HAND AUGER**
DRILLING TYPE: **4" DIA. AUGER**
FIELD ENGINEER: **C. Bartlett**

MOISTURE CONTENT (% OF DRY WT)	DRY DENSITY (LBS/CU FT)	SAMPLE TYPE	SAMPLE	BLOWS/FT.	DEPTH (FEET)	USCS	GRAPHIC	SOIL DESCRIPTION
		G				GC		Clayey GRAVEL; with sand, cobbles and boulders, brown, slightly damp
								Hand Auger Refusal at 1 Foot on Cobbles and Boulders
					5			
					10			

N- STANDARD PENETRATION TEST
R- RING SAMPLE
CA- CALIFORNIA MODIFIED SAMPLER
G- GRAB SAMPLE
B- BUCKET SAMPLE

NOTES: **Groundwater Not Encountered**

THIS SUMMARY APPLIES ONLY AT THIS LOCATION AND AT THE TIME OF LOGGING. CONDITIONS MAY DIFFER AT OTHER LOCATIONS AND MAY CHANGE AT THIS LOCATION WITH TIME. DATA PRESENTED IS A SIMPLIFICATION.

Geotechnical Environmental Inspections Materials

Western Technologies Inc.
The Quality People
Since 1955

PROJECT: **JEROME WWTP IMPROVEMENTS**
PROJECT NO.: **2522JW197**

PLATE **A-11**

BORING LOG

DATE DRILLED: **9-16-22**
LOCATION: **See Location Diagram**
ELEVATION: **Not Determined**

BORING NO. 9

EQUIPMENT TYPE: **HAND AUGER**
DRILLING TYPE: **4" DIA. AUGER**
FIELD ENGINEER: **C. Bartlett**

MOISTURE CONTENT (% OF DRY WT)	DRY DENSITY (LBS/CU FT)	SAMPLE TYPE	SAMPLE	BLOWS/FT.	DEPTH (FEET)	USCS	GRAPHIC	SOIL DESCRIPTION
		G				SC		Clayey SAND; with gravel, cobbles and boulders, brown, slightly damp
								Hand Auger Refusal at 1 Foot on Cobbles and Boulders
					5			
					10			

N- STANDARD PENETRATION TEST
R- RING SAMPLE
CA- CALIFORNIA MODIFIED SAMPLER
G- GRAB SAMPLE
B- BUCKET SAMPLE

NOTES: **Groundwater Not Encountered**

THIS SUMMARY APPLIES ONLY AT THIS LOCATION AND AT THE TIME OF LOGGING. CONDITIONS MAY DIFFER AT OTHER LOCATIONS AND MAY CHANGE AT THIS LOCATION WITH TIME. DATA PRESENTED IS A SIMPLIFICATION.

Geotechnical Environmental Inspections Materials

Western Technologies Inc.
The Quality People
Since 1955

PROJECT: **JEROME WWTP IMPROVEMENTS**
PROJECT NO.: **2522JW197**

PLATE
A-12

BORING LOG

DATE DRILLED: **9-16-22**
LOCATION: **See Location Diagram**
ELEVATION: **Not Determined**

BORING NO. 10

EQUIPMENT TYPE: **HAND AUGER**
DRILLING TYPE: **4" DIA. AUGER**
FIELD ENGINEER: **C. Bartlett**

MOISTURE CONTENT (% OF DRY WT)	DRY DENSITY (LBS/CU FT)	SAMPLE TYPE	SAMPLE	BLOWS/FT.	DEPTH (FEET)	USCS	GRAPHIC	SOIL DESCRIPTION
		G				GC		Clayey GRAVEL; with sand, cobbles and boulders, brown, slightly damp
								Hand Auger Refusal at 1 Foot on Cobbles and Boulders
					5			
					10			

N- STANDARD PENETRATION TEST
R- RING SAMPLE
CA- CALIFORNIA MODIFIED SAMPLER
G- GRAB SAMPLE
B- BUCKET SAMPLE

NOTES: **Groundwater Not Encountered**

THIS SUMMARY APPLIES ONLY AT THIS LOCATION AND AT THE TIME OF LOGGING. CONDITIONS MAY DIFFER AT OTHER LOCATIONS AND MAY CHANGE AT THIS LOCATION WITH TIME. DATA PRESENTED IS A SIMPLIFICATION.

Geotechnical Environmental Inspections Materials

Western Technologies Inc.
The Quality People
Since 1955

PROJECT: **JEROME WWTP IMPROVEMENTS**
PROJECT NO.: **2522JW197**

PLATE
A-13

BORING LOG

DATE DRILLED: **9-16-22**
LOCATION: **See Location Diagram**
ELEVATION: **Not Determined**

BORING NO. 11

EQUIPMENT TYPE: **HAND AUGER**
DRILLING TYPE: **4" DIA. AUGER**
FIELD ENGINEER: **C. Bartlett**

MOISTURE CONTENT (% OF DRY WT)	DRY DENSITY (LBS/CU FT)	SAMPLE TYPE	SAMPLE	BLOWS/FT.	DEPTH (FEET)	USCS	GRAPHIC	SOIL DESCRIPTION
		G				GC		Clayey GRAVEL; with sand, cobbles and boulders, brown, slightly damp
								Hand Auger Refusal at 1 Foot on Cobbles and Boulders
					5			
					10			

N- STANDARD PENETRATION TEST
R- RING SAMPLE
CA- CALIFORNIA MODIFIED SAMPLER
G- GRAB SAMPLE
B- BUCKET SAMPLE

NOTES: **Groundwater Not Encountered**

THIS SUMMARY APPLIES ONLY AT THIS LOCATION AND AT THE TIME OF LOGGING. CONDITIONS MAY DIFFER AT OTHER LOCATIONS AND MAY CHANGE AT THIS LOCATION WITH TIME. DATA PRESENTED IS A SIMPLIFICATION.

Geotechnical Environmental Inspections Materials

Western Technologies Inc.
The Quality People
Since 1955

PROJECT: **JEROME WWTP IMPROVEMENTS**
PROJECT NO.: **2522JW197**

PLATE
A-14

BORING LOG

DATE DRILLED: **9-16-22**
LOCATION: **See Location Diagram**
ELEVATION: **Not Determined**

BORING NO. 12

EQUIPMENT TYPE: **HAND AUGER**
DRILLING TYPE: **4" DIA. AUGER**
FIELD ENGINEER: **C. Bartlett**

MOISTURE CONTENT (% OF DRY WT)	DRY DENSITY (LBS/CU FT)	SAMPLE TYPE	SAMPLE	BLOWS/FT.	DEPTH (FEET)	USCS	GRAPHIC	SOIL DESCRIPTION
		G				GM		Silty GRAVEL; with sand, cobbles and boulders, brown, slightly damp
								Hand Auger Refusal at 1 Foot on Cobbles and Boulders
					5			
					10			

N- STANDARD PENETRATION TEST
R- RING SAMPLE
CA- CALIFORNIA MODIFIED SAMPLER
G- GRAB SAMPLE
B- BUCKET SAMPLE

NOTES: **Groundwater Not Encountered**

THIS SUMMARY APPLIES ONLY AT THIS LOCATION AND AT THE TIME OF LOGGING. CONDITIONS MAY DIFFER AT OTHER LOCATIONS AND MAY CHANGE AT THIS LOCATION WITH TIME. DATA PRESENTED IS A SIMPLIFICATION.

Geotechnical Environmental Inspections Materials

Western Technologies Inc.
The Quality People
Since 1955

PROJECT: **JEROME WWTP IMPROVEMENTS**
PROJECT NO.: **2522JW197**

PLATE
A-15

BORING LOG

DATE DRILLED: **9-16-22**
LOCATION: **See Location Diagram**
ELEVATION: **Not Determined**

BORING NO. 13

EQUIPMENT TYPE: **HAND AUGER**
DRILLING TYPE: **4" DIA. AUGER**
FIELD ENGINEER: **C. Bartlett**

MOISTURE CONTENT (% OF DRY WT)	DRY DENSITY (LBS/CU FT)	SAMPLE TYPE	SAMPLE	BLOWS/FT.	DEPTH (FEET)	USCS	GRAPHIC	SOIL DESCRIPTION
		G				GC		Clayey GRAVEL; with sand, cobbles and boulders, brown, slightly damp
								Hand Auger Refusal at 1 Foot on Cobbles and Boulders
					5			
					10			

N- STANDARD PENETRATION TEST
R- RING SAMPLE
CA- CALIFORNIA MODIFIED SAMPLER
G- GRAB SAMPLE
B- BUCKET SAMPLE

NOTES: **Groundwater Not Encountered**

THIS SUMMARY APPLIES ONLY AT THIS LOCATION AND AT THE TIME OF LOGGING. CONDITIONS MAY DIFFER AT OTHER LOCATIONS AND MAY CHANGE AT THIS LOCATION WITH TIME. DATA PRESENTED IS A SIMPLIFICATION.

Geotechnical Environmental Inspections Materials

Western Technologies Inc.
The Quality People
Since 1955

PROJECT: **JEROME WWTP IMPROVEMENTS**
PROJECT NO.: **2522JW197**

PLATE
A-16

BORING LOG

Test Pit/ Boring No.	Depth (ft)	USCS Class.	Particle Size Distribution (%) Passing by Weight							Atterberg Limits		Laboratory Compaction Characteristics			Remarks
			3"	¾"	#4	#10	#40	#200	2µ	LL	PI	Dry Density (pcf)	Optimum Moisture (%)	Method	
1	0-5	GM	100	71	56	48	31	15.5			NP				2
6	0-5	GC	100	69	50	41	30	18.3		43	18				2
7	0-5	GC	100	77	59	49	35	21.6		37	20				2
9	0-1	SC	100	87	71	57	40	25.6		41	16				2
12	0-1	GM	100	74	56	50	44	26.4		42	14				2

NOTE: NP = Non-plastic
µ = microns (2µ = 0.002mm)

REMARKS

Classification / Particle Size / Moisture-Density Relationship

1. Visual
2. Laboratory Tested
3. Minus #200 Only
4. Test Method ASTM D698/AASHTO T99
5. Test Method ASTM D1557/AASHTO T180
6. From the ADOT Family of Curves

Geotechnical Environmental Inspections Materials
Western Technologies Inc.
The Quality People
Since 1955
wt-us.com

PROJECT: TOWN OF JEROME WWTP IMPROVEMENTS

JOB NO.: 2522JW197

PLATE

B-1

SOIL PROPERTIES

Test Pit No.	Depth (ft.)	USCS Class.	Initial Dry Density (pcf)	Initial Water Content (%)	Laboratory Compaction Characteristics			Expansion Properties		Plasticity		Soluble		Remarks
					Dry Density(pcf)	Optimum Moisture(%)	Method	Surcharge (ksf)	Expansion (%)	LL	PI	Salts (ppm)	Sulfate (ppm)	
6	0-5	GC	91.5	17.4	96.4	20.3	A	0.1	1.9					1,2,3
7	0-5	GC	109.8	12.0	115.7	14.9	A	0.1	2.1					1,2,3

Notes: Initial Dry Density and Initial Water Content are remolded.

Remarks

1. Compacted density (approx. 95% of ASTM D698 max. density at moisture content slightly below optimum.)
2. Submerged to approximate saturation.
3. Test Method ASTM D698/AASHTO T99
4. Test Method ASTM D1557/AASHTO T180
5. From the ADOT Family of Curves

Geotechnical Environmental Inspections Materials

Western Technologies Inc. The Quality People Since 1955

wt-us.com

PROJECT: TOWN OF JEROME WWTP IMPROVEMENTS

JOB NO.: 2522JW197

SOIL PROPERTIES

PLATE

B-2

Test No.	Depth (ft)	Rock Classification	Unit Weight (pcf)	Unconfined Compressive Strength (psi)	Remarks
1	Surface	Limestone	166.7	4,150	1,2
2	Surface	Limestone	167.8	10,940	1,2

REMARKS:

1. ASTM D7012 – Unit Weight of Rock Cores
2. ASTM C39 – Unconfined Compressive Strength of Rock Cores

CORROSIVITY TEST RESULTS

The procedures for soil survey tests and observations can be found in Appendix X1.1 of ASTM A674-10 and includes five soil properties: earth resistivity • pH • redox potential • sulfides • moisture.

Test Pit 7(0-5):

Analysis	Results		Points
Resistivity (ohm-cm)	1401		10
pH	8.5		0
Redox Potential (mV)	+134		0
Sulfides	trace		2
Moisture	fair		1
		Total Points	13

Boring 12(0-1):

Analysis	Results		Points
Resistivity (ohm-cm)	2481		2
pH	8.1		0
Redox Potential (mV)	+314		0
Sulfides	trace		2
Moisture	fair		1
		Total Points	5

The test procedure states that if the sum of the points is greater than 10, the soil is considered corrosive to ductile iron pipe and special protection against exterior corrosion is necessary. This conclusion is limited to soil corrosion and does not include consideration of stray direct current.

MOTZZ LABORATORY, INC.

Report: 943846
Reported: 9/28/2022
Received: 9/26/2022
PO: 2522P176

Laboratory Analysis Report

Western Technologies - Flagstaff
Gregory L. E. Burr
2400 East Huntington
Flagstaff, AZ 86004-8934

Project: 2522JW197

Lab Number	Sample ID
943846-2	1 (0-5')

Test Parameter

Test	*Method*	*Result*	*Units*
Soluble Salts	ARIZ 237b	1162	ppm
Sulfate	ARIZ 733b	236	ppm
Chloride	ARIZ 736b	7	ppm

Lab Number	Sample ID
943846-1	12 (0-1')

Test Parameter

Test	*Method*	*Result*	*Units*
Soluble Salts	ARIZ 237b	303	ppm
Sulfate	ARIZ 733b	15	ppm
Chloride	ARIZ 736b	7	ppm
Redox Potential	ASTM G200-09	314	(Eo) mV

Plate B-5

BID FORM FOR CONSTRUCTION CONTRACT
ADDENDUM 1 VERSION

Contractor Name: _____

The terms used in this Bid with initial capital letters have the meanings stated in the Instructions to Bidders, the General Conditions, and the Supplementary Conditions.

ARTICLE 1—OWNER AND BIDDER

1.01 This Bid is submitted to:

Town of Jerome
Submitted electronically via email to tpierce@pacewater.com. Alternatively, Bidder may submit a hard copy the Town of Jerome, 600 Clark Street, Jerome, AZ 86331.

The undersigned Bidder proposes and agrees, if this Bid is accepted, to enter into an Agreement with Owner in the form included in the Bidding Documents to perform all Work as specified or indicated in the Bidding Documents for the prices and within the times indicated in this Bid and in accordance with the other terms and conditions of the Bidding Documents.

ARTICLE 2—ATTACHMENTS TO THIS BID

2.01 The following documents are submitted with and made a condition of this Bid:

A. Required Bid security;

B. List of Proposed Subcontractors;

~~C. List of Proposed Suppliers;~~

D. Evidence of authority to do business in the state of the Project; or a written covenant to obtain such authority within the time for acceptance of Bids;

E. Contractor's license number as evidence of Bidder's State Contractor's License or a covenant by Bidder to obtain said license within the time for acceptance of Bids;

F. Required Bidder Qualification Statement with supporting data; ~~and~~

G. If Bid amount exceeds $10,000, signed Compliance Statement (RD 400-6). Refer to specific equal opportunity requirements set forth in the Supplementary Conditions of the Construction Contract (EJCDC C-800);

H. If Bid amount exceeds $25,000, signed Certification Regarding Debarment, Suspension, Ineligibility and Voluntary Exclusion - Lower Tier Covered Transactions (AD-1048);

I. If Bid amount exceeds $100,000, signed RD Instruction 1940-Q Exhibit A-1, Certification for Contracts, Grants, and Loans.

ARTICLE 3—BASIS OF BID—LUMP SUM BID AND UNIT PRICES

3.01 *Lump Sum Bids*

A. Bidder will complete the Work in accordance with the Contract Documents for the following lump sum (stipulated) price(s), together with any Unit Prices indicated in Paragraph 3.02:

Copyright© 2018 National Society of Professional Engineers, American Council of Engineering Companies, and American Society of Civil Engineers. All rights reserved.

1. Lump Sum Price (Base Bid and Alternates)

BASE BID LUMP SUM BREAKDOWN					
	Item Description	**Unit**	**Estimated Qty**	**Bid Unit Price**	**Total Bid Price**
1	**ACCESS ROAD & SITE WORK**				
1.1	SWPPP	LS	1	$	$
1.2	Access Road (cut, grading, paving)	CY	4,440	$	$
1.3	Roadway Appurtenance (guardrail, gates, catch basins)	LS	1	$	$
1.4	Traffic Control	LS	1	$	$
2	**12" SEWER LINE IMPROVEMENTS**				
2.1	12" FPVC New Sewer Main	LF	143	$	$
2.2	Sewer Road Alignment Cut to Fill	CY	300	$	$
2.3	48" Manholes	EA	2	$	$
2.4	Bypass Plumbing and Equipment	LS	1	$	$
3	**TREATMENT PLANT SITE**				
3.1	Survey, Staking & Materials Testing	LS	1	$	$
3.2	Clearing & Grubbing	LS	1	$	$
3.3	Earthwork (Shoring, Erosion Control & Final Site Grading)	LS	1	$	$
3.4	Earthwork (Excavation, Fill & Backfill)	CY	2,495	$	$
3.5	Yard Piping	LS	1	$	$

Copyright© 2018 National Society of Professional Engineers, American Council of Engineering Companies, and American Society of Civil Engineers. All rights reserved.

BASE BID LUMP SUM BREAKDOWN					
	Item Description	**Unit**	**Estimated Qty**	**Bid Unit Price**	**Total Bid Price**
3.6	Fencing	LF	800	$	$
3.7	Blower / Admin Building	SF	750	$	$
3.8	Reed Bed Conversion to Drying Beds	LS	1	$	$
3.9	Wetland Cells Conversion to Emergency Overflow	LS	1	$	$
3.10	Retaining Walls	LF	262	$	$
3.11	Structural Concrete (SBR Tanks, Site, Chlorine Contact Channel)	CY	937	$	$
3.12	SBR Equipment	LS	1	$	$
3.13	Headworks Equipment	LS	1	$	$
3.14	Sludge Bagging Unit	LS	1	$	$
3.15	Polymer Dosing System	LS	1	$	$
3.16	Sludge Feed Pump	LS	1	$	$
3.17	Disinfection & Miscellaneous Equipment	LS	1	$	$
3.18	Site Electrical and Standby Generator	LS	1	$	$
3.19	Upgrade Site to 3 Phase Power	LS	1	$	$
4	**OTHER**				

Copyright© 2018 National Society of Professional Engineers, American Council of Engineering Companies, and American Society of Civil Engineers. All rights reserved.

BASE BID LUMP SUM BREAKDOWN					
	Item Description	**Unit**	**Estimated Qty**	**Bid Unit Price**	**Total Bid Price**
4.1	Mobilization/Demobilization	LS	1	$	$
4.2	Taxes	LS	1	$	$
				TOTAL BASE BID LUMP SUM AMOUNT	$

BID ALTERNATES LUMP SUM BREAKDOWN					
NEW 12" SEWER AND ACCESS ROAD					
	Item Description	**Unit**	**Estimated Qty**	**Bid Unit Price**	**Total Bid Price**
1	**Bid Adder:** 12" FPVC New Sewer Main	LF	2,750	$	$
2	**Bid Adder:** Restore Lateral Connections	EA	5	$	$
3	**Bid Adder:** Sewer Road Alignment Cut to Fill	CY	3,266	$	$
4	**Bid Adder:** 48" Manholes	EA	10	$	$
5	**Bid Adder:** Rockfall Barrier	LF	150	$	$
				TOTAL ALTERNATES LUMP SUM AMOUNT	

TOTAL LUMP SUM PRICE (BASE BID AND ALTERNATES)		
	Item Description	**Total Bid Price**
1	Total Lump Sum for Base Bid	$
2	Total Lump Sum for Bid Adder: New 12" Sewer and Access Road	$

Copyright© 2018 National Society of Professional Engineers, American Council of Engineering Companies, and American Society of Civil Engineers. All rights reserved.

TOTAL LUMP SUM BASE BID AND ALTERNATES PRICE	$

B. All specified cash allowance(s) are included in the price(s) set forth below, and have been computed in accordance with Paragraph 13.02 of the General Conditions.

TOTAL ALLOWANCE PRICE		
	Item Description	**Total Bid Price**
1	Materials Testing	$
	TOTAL ALLOWANCE PRICE	$

ARTICLE 4—DELETED

ARTICLE 5—DELETED

ARTICLE 6—TIME OF COMPLETION

6.01 Bidder agrees that the Work will be substantially complete and will be completed and ready for final payment in accordance with Paragraph 15.06 of the General Conditions on or before the dates or within the number of calendar days indicated in the Agreement.

6.02 **[Deleted]**

6.03 **[Deleted]**

6.04 Bidder accepts the provisions of the Agreement as to liquidated damages.

ARTICLE 7—BIDDER'S ACKNOWLEDGEMENTS: ACCEPTANCE PERIOD, INSTRUCTIONS, AND RECEIPT OF ADDENDA

7.01 *Bid Acceptance Period*

A. This Bid will remain subject to acceptance for 60 days after the Bid opening, or for such longer period of time that Bidder may agree to in writing upon request of Owner.

7.02 *Instructions to Bidders*

A. Bidder accepts all of the terms and conditions of the Instructions to Bidders, including without limitation those dealing with the disposition of Bid security.

7.03 *Receipt of Addenda*

A. Bidder hereby acknowledges receipt of the following Addenda:

Addendum Number	Addendum Date

Copyright© 2018 National Society of Professional Engineers, American Council of Engineering Companies, and American Society of Civil Engineers. All rights reserved.

7.04 **[Deleted]**

ARTICLE 8—BIDDER'S REPRESENTATIONS AND CERTIFICATIONS

8.01 *Bidder's Representations*

A. In submitting this Bid, Bidder represents the following:

1. Bidder has examined and carefully studied the Bidding Documents, including Addenda.

2. [Deleted]

3. Bidder is familiar with all Laws and Regulations that may affect cost, progress, and performance of the Work**, including all American Iron and Steel requirements.**

4. Bidder has carefully studied the reports of explorations and tests of subsurface conditions at or adjacent to the Site and the drawings of physical conditions relating to existing surface or subsurface structures at the Site that have been identified in the Supplementary Conditions, with respect to the Technical Data in such reports and drawings.

5. Bidder has carefully studied the reports and drawings relating to Hazardous Environmental Conditions, if any, at or adjacent to the Site that have been identified in the Supplementary Conditions, with respect to Technical Data in such reports and drawings.

6. Bidder has considered the information known to Bidder itself; information commonly known to contractors doing business in the locality of the Site; information and observations obtained from visits to the Site; the Bidding Documents; and the Technical Data identified in the Supplementary Conditions or by definition, with respect to the effect of such information, observations, and Technical Data on (a) the cost, progress, and performance of the Work; (b) the means, methods, techniques, sequences, and procedures of construction to be employed by Bidder, if selected as Contractor; and (c) Bidder's (Contractor's) safety precautions and programs.

7. Based on the information and observations referred to in the preceding paragraph, Bidder agrees that no further examinations, investigations, explorations, tests, studies, or data are necessary for the performance of the Work at the Contract Price, within the Contract Times, and in accordance with the other terms and conditions of the Contract.

8. Bidder is aware of the general nature of work to be performed by Owner and others at the Site that relates to the Work as indicated in the Bidding Documents.

9. Bidder has given Engineer written notice of all conflicts, errors, ambiguities, or discrepancies that Bidder has discovered in the Bidding Documents, and of discrepancies between Site conditions and the Contract Documents, and the written resolution thereof by Engineer is acceptable to Contractor.

10. The Bidding Documents are generally sufficient to indicate and convey understanding of all terms and conditions for performance and furnishing of the Work.

Copyright© 2018 National Society of Professional Engineers, American Council of Engineering Companies, and American Society of Civil Engineers. All rights reserved.

11. The submission of this Bid constitutes an incontrovertible representation by Bidder that without exception the Bid and all prices in the Bid are premised upon performing and furnishing the Work required by the Bidding Documents.

8.02 *Bidder's Certifications*

A. The Bidder certifies the following:

1. This Bid is genuine and not made in the interest of or on behalf of any undisclosed individual or entity and is not submitted in conformity with any collusive agreement or rules of any group, association, organization, or corporation.

2. Bidder has not directly or indirectly induced or solicited any other Bidder to submit a false or sham Bid.

3. Bidder has not solicited or induced any individual or entity to refrain from bidding.

4. Bidder has not engaged in corrupt, fraudulent, collusive, or coercive practices in competing for the Contract. For the purposes of this Paragraph 8.02.A:

a. Corrupt practice means the offering, giving, receiving, or soliciting of anything of value likely to influence the action of a public official in the bidding process.

b. Fraudulent practice means an intentional misrepresentation of facts made (a) to influence the bidding process to the detriment of Owner, (b) to establish bid prices at artificial non-competitive levels, or (c) to deprive Owner of the benefits of free and open competition.

c. Collusive practice means a scheme or arrangement between two or more Bidders, with or without the knowledge of Owner, a purpose of which is to establish bid prices at artificial, non-competitive levels.

d. Coercive practice means harming or threatening to harm, directly or indirectly, persons or their property to influence their participation in the bidding process or affect the execution of the Contract.

Copyright© 2018 National Society of Professional Engineers, American Council of Engineering Companies, and American Society of Civil Engineers. All rights reserved.

BIDDER hereby submits this Bid as set forth above:

Bidder:

_____

(typed or printed name of organization)

By: _____

(individual's signature)

Name: _____

(typed or printed)

Title: _____

(typed or printed)

Date: _____

(typed or printed)

If Bidder is a corporation, a partnership, or a joint venture, attach evidence of authority to sign.

Attest: _____

(individual's signature)

Name: _____

(typed or printed)

Title: _____

(typed or printed)

Date: _____

(typed or printed)

Address for giving notices:

_____

_____

Bidder's Contact:

Name: _____

(typed or printed)

Title: _____

(typed or printed)

Phone: _____

Email: _____

Address:

_____

_____

_____

Bidder's Contractor License No.: (if applicable) _____

Copyright© 2018 National Society of Professional Engineers, American Council of Engineering Companies, and American Society of Civil Engineers. All rights reserved.

Western Technologies Inc.

GEOTECHNICAL EVALUATION REPORT

JEROME WWTP UPGRADES
Jerome, Arizona
WT Reference No. 2522JW197

PREPARED FOR:
Pace Advanced Water Engineering
P.O. Box 4805
Scottsdale, Arizona 85261
Attn: Ms. Andrea Jaycox, Senior Project Coordinator

October 25, 2022

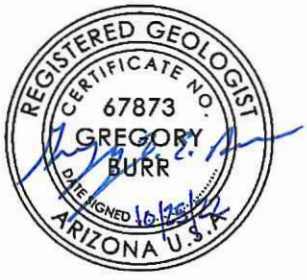

Gregory L. E. Burr, R.G., E.I.T.
Director of Geotechnical Services



Craig P. Wiedeman, P.E.
Senior Geotechnical Engineer

Western Technologies Inc.
The Quality People
Since 1955

2400 East Huntington Drive
Flagstaff, Arizona 86004-8934
(928) 774-8700 • fax 774-6469

October 25, 2022

Pace Advanced Water Engineering
P.O. Box 4805
Scottsdale, Arizona 85261

Attn: Ms. Andrea Jaycox, Senior Project Coordinator

Re: Geotechnical Evaluation
Jerome WWTP Upgrades
Jerome, Arizona

Job No. 2522JW197

Western Technologies Inc. has completed the geotechnical evaluation for the waste water treatment plant upgrades and new wastewater pipeline to be located in Jerome, Arizona. This study was performed in general accordance with our proposal number 2522PW253 dated June 15, 2022. The results of our study, including the boring/test pit location diagrams, laboratory test results, boring/test pit logs, and the geotechnical recommendations are attached.

We have appreciated being of service to you in the geotechnical engineering phase of this project and are prepared to assist you during the construction phases as well. If design conditions change, or if you have any questions concerning this report or any of our testing, inspection, design and consulting services, please do not hesitate to contact us. We look forward to working with you on future projects.

Sincerely,
WESTERN TECHNOLOGIES, INC.
Geotechnical Engineering Services

Gregory L. E. Burr, R.G., E.I.T.
Director of Geotechnical Services

Copies to: Addressee (emailed)

TABLE OF CONTENTS

1.0 PURPOSE 1

2.0 PROJECT DESCRIPTION 1

3.0 SCOPE OF SERVICES 2
3.1 Field Exploration 2
3.2 Laboratory Analyses 2
3.3 Analyses and Report 3

4.0 SITE CONDITIONS 3
4.1 Surface 3
4.2 Subsurface 4

5.0 GEOTECHNICAL PROPERTIES 4

6.0 RECOMMENDATIONS 4
6.1 General 4
6.2 Design Considerations 5
6.3 Tank Foundations 5
6.4 Manhole Foundations 6
6.5 Lateral Design Criteria for Thrust Blocks 6
6.6 Conventional Spread Footings 6
6.7 Lateral Design Criteria 7
6.8 Seismic Considerations 8
6.9 Slab-on-Grade Support 9
6.10 Drainage 10
6.11 Aggregate-Surfaced Roadways 10
6.12 Corrosivity 10

7.0 EARTHWORK 11
7.1 General 11
7.2 Site Clearing 11
7.3 Excavation 11
7.4 Tank Pad Preparation 12
7.5 Spread Footing Foundation Preparation 12
7.6 Slab-on-Grade Preparation 12
7.7 Exterior Slab Preparation 13
7.8 Materials 14
7.9 Placement and Compaction 15
7.10 Compliance 16

8.0 ADDITIONAL SERVICES 16

9.0 LIMITATIONS 17

10.0 CLOSURE 17

TABLE OF CONTENTS (Continued)

TEST PIT/BORING LOCATION DIAGRAMS ..... Plates 1 and 2

APPENDIX A
Definition of Terminology A-1
Method of Soil Classification A-2
Test Pit/Boring Log Notes A-3
Test Pit/Boring Logs ..... A-4 to A-16

APPENDIX B
Laboratory Tests ..... B-1 to B-5

GEOTECHNICAL EVALUATION
JEROME WWTP UPGRADES
JEROME, ARIZONA
JOB NO. 2522JW197

1.0 PURPOSE

This report contains the results of our geotechnical evaluation for the proposed WWTP upgrades and new wastewater pipeline to be located at the existing wastewater treatment plant in Jerome, Arizona. The purpose of these services is to provide information and recommendations regarding:

- foundation design parameters
- slab-on-grade
- lateral earth pressures
- excavation conditions
- earthwork, including backfill placement, and suitability of existing soils for backfill materials
- drainage
- corrosivity
- on-site aggregate surfacing

Results of the field exploration, field tests, and laboratory testing program are presented in the Appendices.

2.0 PROJECT DESCRIPTION

Based on the revised information provided by Ms. Andrea Jaycox, Senior Project Coordinator, the proposed project will consist of approximately 2,400 linear feet of wastewater line, a new SBR Package Plant, and new primary settling and headworks tanks. The structures will be concrete and/or masonry construction with slab-on-grade floors. Maximum wall and column loads for the structures are assumed to be 3 kips per linear foot and 45 kips, respectively. The wastewater line invert elevations will be a maximum of 10 feet below the lowest existing site grades. We anticipate no extraordinary slab-on-grade criteria and that the finished structure bottom levels will be within about 2 to 3 feet of the existing site grades. In addition, approximately 2,000 linear feet of the existing access road will be resurfaced, widened, and additional pull-outs will be constructed. Should any of our information or assumptions not be correct, we request that the Client notify WT immediately.

3.0 SCOPE OF SERVICES

3.1 Field Exploration

Seven test pits and six borings were excavated/hand-auger drilled to depths of about 1 to 8 feet below the existing site grades at the approximate locations shown on the attached test pit/boring location diagrams. In addition, two samples of on-site rock were obtained for unit weight and unconfined compressive strength testing.

Logs of the test pits/borings are presented in Appendix A. Subsoils encountered during excavating/drilling were examined visually and sampled at selected depth intervals. A field log was prepared for each test pit/boring. These logs contain visual classifications of the materials encountered during excavation/drilling as well as interpolation of the subsurface conditions between samples. Final logs, included in Appendix A, represent our interpretation of the field logs and include modifications based on laboratory observations and tests of the field samples.

The final logs describe the materials encountered, their thicknesses, and the locations where samples were obtained. The Unified Soil Classification System was used to classify soils. The soil classification symbols appear on the test pit/boring logs and are briefly described in Appendix A. Local and regional geologic characteristics were used to estimate the seismic design criteria.

3.2 Laboratory Analyses

Laboratory analyses were performed on representative samples to aid in material classification and to estimate pertinent engineering properties of the on-site materials for preparation of this report. Testing was performed in general accordance with applicable ASTM and Arizona methods. The following tests were performed and the results are presented in Appendix B.

- Water content
- Dry density
- Remolded expansion potential
- Maximum density/optimum moisture
- Gradation
- Plasticity
- Soluble salts/sulfates/chlorides

- Corrosivity (ASTM A674)
- Unconfined compressive strength (rock)
- Unit weight (rock)

Test results were utilized in the development of the recommendations contained in this report.

3.3 Analyses and Report

This geotechnical engineering report includes a description of the project, a discussion of the field and laboratory testing programs, a discussion of the subsurface conditions, and design recommendations as appropriate to the purpose. The scope of services for this project does not include, either specifically or by implication, any environmental assessment of the site, discovery of underground storage tanks or other underground structures, or identification of contaminated or hazardous materials or conditions. If there is concern about the potential for such contamination, other studies should be undertaken. We are available to discuss the scope of such studies with you.

4.0 SITE CONDITIONS

4.1 Surface

At the time of our field exploration, the site was a developed wastewater treatment plant. The exteriors of existing structures appeared to be in good to fair condition. The site is bordered on the east by the existing aggregate surfaced access road to the plant, and on all other sides by northeast-southwest oriented Bitter Creek that is about 50 to 100 feet wide and 20 to 30 feet deep that directs flow to the northeast. The ground surface was relatively flat in the developed portions of the site, steep to very steep surrounding the developed areas, and contained a sparse to moderate growth of native juniper trees, bushes, cacti, grasses and weeds. Surface drainage appeared to be fair to poor with some evidence of previous surface water ponding in the developed portions of the site, and good in the undeveloped portions of the site by means of surface sheet flow to the west and north down the existing slopes into Bitter Creek.

4.2 Subsurface

As presented on the test pit/boring logs, surface and subsoils extending to the full depth of exploration at all locations explored consisted of medium to near-high plasticity Clayey SANDS with variable amounts of gravel, Clayey GRAVELS with variable amounts of sand and non-plastic Silty GRAVELS with variable amounts of sand. All soils encountered contained random amounts of limestone cobbles and boulders. Refusal to excavator/auger penetration occurred in all test pits/borings at depths of about 1 to 8 feet on LIMESTONE or limestone cobbles and boulders. Groundwater was not encountered in any test pit/boring at the time of exploration. The logs in Appendix A show details of the subsurface conditions encountered during the field exploration.

The test pit/boring logs included in this report are indicators of subsurface conditions only at the specific location and date noted. Variations from the field conditions represented by the test pits/borings may become evident during construction. If variations appear, we should be contacted to re-evaluate our recommendations.

5.0 GEOTECHNICAL PROPERTIES

Near-surface soils range from non-plastic to near-high plasticity. The site soils exhibit moderate expansion potential when recompacted, confined by loads approximating floor loads and saturated in accordance with standard Arizona test methods. Slabs-on-grade supported on recompacted native soils have a moderate potential for heaving if the water content of the soil increases. The site soils were too granular to obtain samples suitable for compression testing. Two samples of the on-site rock were obtained for unit weight and unconfined compressive strength testing and the results are present in Appendix B.

6.0 RECOMMENDATIONS

6.1 General

Recommendations contained in this report are based on our understanding of the project criteria described in Section 2.0, **PROJECT DESCRIPTION**, and the assumption that the soil and subsurface conditions are those disclosed by the test pits/borings. Others may change the plans, final elevations, number and type of structures, foundation loads, and tank bottom levels during design or construction. Substantially different subsurface conditions

from those described herein may be encountered or become known. Any changes in the project criteria or subsurface conditions shall be brought to our attention in writing.

6.2 Design Considerations

Existing fill was not encountered in the test pits/borings, but was observed on the site. We understand that no documentation is available regarding any field density testing that may have been performed during fill construction. Based on this lack of documentation and the overall condition of the fill observed, we consider the fill to be uncontrolled and recommend removal of existing fill in all structural areas.

Several of the test pits/borings indicate the presence of medium to near-high plasticity clayey soils on the site. These soils will expand or swell with an increase in moisture content. The structures and related improvements situated on expansive soils will be subject to movements if the foundation soils experience an increase in moisture content. It should be understood that if moisture penetrates expansive soils, there will likely be heave and possible resultant cracking/distress of the proposed structures and related improvements. It should be noted that shallow foundation systems are not designed to resist soil movements resulting from sewer or plumbing leaks, excessive or leaking irrigation systems, poor drainage, or water ponding near the structures. Construction of site fences, screen walls and other miscellaneous improvements such as exterior slabs-on-grade that typically fall under building code guidelines will be susceptible to heave as well.

Cobbles and boulders were encountered in the test pits/borings. These oversized materials, greater than 3 inches, could present construction difficulties for foundation, utility trenches and other excavations. In cut areas and excavations, exposed oversized materials should be removed.

6.3 Tank Foundations

Above-ground tanks may be supported on compacted aggregate underlain by a minimum thickness of 1 foot of site soils removed and replaced with properly compacted, imported engineered fill material. Below-ground tanks may be supported on scarified and recompacted native soils. Any existing fill should be removed in all proposed tank areas. The tank pads, prepared as recommended in the **EARTHWORK** section of the report, will be suitable to support a maximum dead plus live-load pressure of up to 3000 pounds per square foot. We anticipate that total and differential movements of the proposed above-ground tank structures, supported as recommended, should be within tolerable limits of

the tank manufacturer, typically uniform settlement of less than 2 inches and differential settlement less than 0.5-inch per 32 feet of circumference. Total and differential movements of the proposed below-ground tank structures, supported as recommended, are anticipated to be 1 inch and 3/4 inch, respectively. Additional foundation movements could occur if water from any source infiltrates the foundation soils. Therefore, proper drainage should be provided in the final design and during construction.

We recommend that the geotechnical engineer or his representative observe the tank pad preparation. It should be determined whether the materials exposed are similar to those anticipated for support of the tanks. Any soft, loose or unacceptable materials should be undercut to suitable materials and backfilled with engineered fill material.

6.4 Manhole Foundations

The soils encountered along the alignment are expected to have moderate to high bearing capacity at anticipated manhole foundation depths. Other than removal of any soft, loose, unstable or disturbed materials from beneath manhole foundations, specialized treatment of soils beneath manholes is not anticipated.

6.5 Lateral Design Criteria for Thrust Blocks

For any thrust block design, lateral loads may be resisted using a soil bearing pressure of 2500 pounds per square foot (psf). All fill against or around thrust blocks should be compacted to densities specified herein under **Placement and Compaction**.

6.6 Conventional Spread Footings

If conventional spread footings are used, they should be underlain by a minimum thickness of 1 foot of lean mix (2-sack) concrete backfill. Footings should bear at least 2 feet below the lowest adjacent finished grade. Footings may be designed to impose a maximum dead plus live-load pressure of up to 2500 pounds per square foot.

We anticipate that total movement of the proposed structures, supported as recommended, should be less than 1 inch. Differential movement should be less than ¾ inch. Additional foundation movements could occur if water from any source infiltrates the foundation soils. Therefore, proper drainage should be provided in the final design and during construction.

Finished grade is the lowest adjacent grade for perimeter footings and floor level for interior footings. The design bearing capacity applies to dead loads plus design live load conditions. Recommended minimum widths of column and wall footings are 24 inches and 16 inches, respectively. The bearing value given is a net bearing value and the weight of the concrete in the footings may be ignored.

All footings, stem walls and masonry walls should be reinforced to reduce the potential for distress caused by differential foundation movements. The use of joints at openings or other discontinuities in masonry walls is recommended.

We recommend that the geotechnical engineer or his representative observe the footing excavations before reinforcing steel and concrete are placed. It should be determined whether the soils exposed are similar to those anticipated for support of the footings. Any soft, loose or unacceptable soils should be undercut to suitable materials and backfilled with either lean mix or structural concrete.

6.7 Lateral Design Criteria

For retaining walls located above any free water surface with no surcharge loads, recommended equivalent fluid pressures and coefficients of base friction for unrestrained elements are:

- Active:
  Undisturbed subsoil .....38 psf/ft
  Compacted granular backfill .....30 psf/ft
  Compacted on-site soils (low expansive potential) .....38 psf/ft
  Clayey site soils ..... not recommended for use

- Passive:
  Shallow wall footings .....220 psf/ft
  Shallow column footings.....350 psf/ft
  Dense rock .....500 psf/ft

- Coefficient of base friction
  Soil.....0.35*
  Rock.....0.55

* The coefficient of base friction (soil) should be reduced to 0.25 when used in conjunction with passive pressure.

Where the design includes restrained elements, the following equivalent fluid pressures are recommended:

- At-rest:
  Undisturbed subsoil .....64 psf/ft
  Compacted granular backfill .....55 psf/ft

These lateral earth pressures are not applicable for submerged soils. We should be consulted for additional recommendations if such conditions are to be included in the design. Any surcharge from adjacent loadings must also be considered. Walls below grade should be waterproofed.

We recommend a free-draining soil layer or manufactured geocomposite material, be constructed adjacent to the back of the retaining wall. A filter may be required between the soil backfill and drainage layer. This drainage zone should help prevent hydrostatic pressure buildup. This vertical drain should be tied into a gravity drainage system at the base of the retaining wall. It is important that all backfill be properly placed and compacted. Backfill should be mechanically compacted in layers. Flooding or jetting should not be permitted. Care should be taken not to damage the walls when placing the backfill. Backfills should be inspected and tested during placement.

Fill against footings, stem walls and retaining walls should be compacted to densities specified in **EARTHWORK**. Medium to high plasticity clay soils should not be used as backfill against retaining walls. Compaction of each lift adjacent to walls should be accomplished with hand-operated tampers or other lightweight compactors. Overcompaction may cause excessive lateral earth pressures which could result in wall movements.

6.8 Seismic Considerations

Structures should be designed in accordance with applicable building codes. The seismic design parameters presented in the following table, in accordance with the 2018 International Building Code and ASCE 7-16, are applicable to the project site:

Seismic Design Parameters International Building Code 2018, ASCE 7-16	
Soil Site Class	C
Mapped Spectral Response Acceleration at 0.2 sec period (S_s)	0.31g
Mapped Spectral Response Acceleration at 1.0 sec period (S_1)	0.097g
Site Coefficient for 0.2 sec period (F_a)	1.3
Site Coefficient for 1.0 sec period (F_v)	1.5
Design Spectral Response Acceleration at 0.2 sec period (S_{DS})	0.269g
Design Spectral Response Acceleration at 1.0 sec period (S_{D1})	0.097g

The soil site class is based upon conditions identified in shallow exploratory test pits/borings and local knowledge of the geotechnical conditions in the vicinity of the site. Conditions extending beyond the depth of our test pits/borings to a depth of 100 feet were assumed for the purposes of providing the information presented in the table. Based upon the density of the on-site soils and lack of groundwater, the potential settlement and lateral spread due to liquefaction is not a considered to be a significant concern on the site.

6.9 Slab-on-Grade Support

Slabs-on-grade should be supported on a minimum thickness of 1 foot of properly placed and compacted, imported, low expansive, engineered fill. For design of interior slabs-on-grade, we recommend using a modulus of subgrade reaction (k) of 200 pounds per cubic inch (pci) for the on-site soils and 225 pci for imported fill material, based on a 30-inch diameter plate. The slab subgrade should be prepared by the procedures outlined in this report. A minimum 4-inch thick layer of base course should be provided beneath all slabs to help prevent capillary rise and a damp slab.

All concrete placement and curing operations should follow the American Concrete Institute manual recommendations. Improper curing techniques and/or high slump (water-cement ratio) could cause excessive shrinkage, cracking or curling. The plastic properties of the concrete should be documented at the time of placement and specimens should also be prepared for strength testing to verify compliance with project specifications. Concrete slabs should be allowed to cure adequately before placing vinyl or other moisture sensitive floor covering.

6.10 Drainage

The major cause of soil-related foundation and slab-on-ground problems is moisture increase in soils below structures. Properly functioning conventional foundations and floor slabs-on-ground require appropriately constructed and maintained site drainage conditions. Therefore, it is extremely important that positive drainage be provided during construction and maintained throughout the life of the structures. It is also important that proper planning and control of any landscape and irrigation practices be performed.

Infiltration of water into utility or foundation excavations must be prevented during construction. Backfill against footings, exterior walls, and in utility line trenches should be well compacted and free of all construction debris to minimize the possibility of moisture infiltration. If utility line trenches are backfilled with a granular material, then a clay or concrete plug should be placed in the trench adjacent to the structure to prevent water from following the trench back under the structure.

6.11 Aggregate-Surfaced Roadways

For unpaved sections, we recommend an initial minimum thickness of 6 inches of granular cover material. As with any unbound vehicular section, additional material will be required over time as cover material is lost due to grading, snow plowing, lateral shoving, and intrusion of the cover material into the underlying subgrade soils. To help reduce intrusion, consideration should be given to the use of a geotextile separator fabric placed at the cover material/subgrade soil interface.

6.12 Corrosivity

Based on the laboratory test results, the on-site soils exhibit a low to moderate corrosive potential to ductile iron piping. This information should be used as an aid in choosing the construction materials that will be in contact with these soils and that will need to be resistant to various corrosive forces. Manufacturers' representatives should be contacted regarding the specific corrosivity resistance for their particular product.

The chemical test results indicate that the soils at the site classify as moderately corrosive to concrete, Class S1 in accordance with ACI 318, Table 4.2.1. Concrete should be made with a cement that provides sulfate resistance and that has a maximum water-cementitious materials ratio and minimum compressive strength set forth in the provisions of ACI 318, Section 4.3.

7.0 EARTHWORK

7.1 General

The conclusions contained in this report for the proposed construction are contingent upon compliance with recommendations presented in this section. Any excavating, trenching, or disturbance which occurs after completion of the earthwork must be backfilled, compacted and tested in accordance with the recommendations contained herein. It is not reasonable to rely upon our conclusions and recommendations if any future unobserved and untested trenching, grading or backfilling occurs.

Although underground facilities were not observed, such features might be encountered during construction. These features should be demolished and removed in accordance with the recommendations of the geotechnical engineer. Any loose or disturbed soils resulting from demolition and/or removal of existing facilities should also be removed and/or recompacted as engineered fill, and any excavations should be backfilled in accordance with recommendations presented herein.

7.2 Site Clearing

Strip and remove all existing fill, remaining vegetation, debris, aggregate surfacing and/or concrete pavement and any other deleterious materials from the building, tank and wastewater line area. The building/tank area is defined as that area within the structure footprint plus 5 feet beyond the perimeter of the footprint. All exposed surfaces should be free of mounds and depressions which could prevent uniform compaction.

7.3 Excavation

We anticipate that excavations into the shallow site soils for the proposed construction can be accomplished with conventional equipment. Excavations penetrating the underlying limestone will require the use of heavy-duty, specialized equipment, likely together with large pneumatic hammers, to facilitate rock break-up and removal.

Cut slopes into the shallow on-site soils should be constructed no steeper than 1:1 (horizontal:vertical) and 0.5:1 (horizontal:vertical) in the limestone bedrock. Fill slopes should be constructed no steeper than 1.5:1 (horizontal:vertical) to limit erosion, and to provide slope protection. Natural slopes exceeding a 5:1 (horizontal:vertical) slope

configuration, should be benched prior to fill placement. Natural slopes which will support fill embankments should be benched at a maximum 5:1 slope.

On-site soils will pump or become unworkable at high water contents. Workability may be improved by scarifying and drying. Overexcavation of wet zones and replacement with drier granular materials may be necessary. The use of lightweight excavation and compaction equipment may be required to minimize subgrade pumping.

7.4 Tank Pad Preparation

Following removal of any existing fill material, above-ground tanks should be founded on a minimum thickness of 1 foot of imported, properly compacted, low expansive, engineered fill material. Remove existing soils to a minimum depth of 1 foot below the bottom of the above-ground tank elevation. Following the removal, and immediately below all below-grade tanks, scarify, moisten or dry as required, and compact all subgrade soils to a minimum depth of 8 inches. The subgrade preparation should be accomplished in a manner which will result in uniform water contents and densities after compaction. In areas where dense limestone is encountered, scarification and recompaction is not required.

7.5 Spread Footing Foundation Preparation

Following removal of any existing fill material in footing areas, remove existing soils to a minimum depth of 1 foot below the bottom of the footing. Removal may extend straight down along the sides of the footing. Replace the removed soils with properly consolidated, lean mix (2-sack) concrete backfill material.

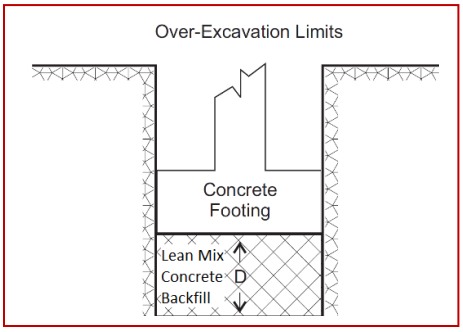

7.6 Slab-on-Grade Preparation

Following removal of any existing fill material, slabs-on-grade should be founded on a minimum thickness of 1 foot of imported, low expansive, engineered fill material. Remove native soils, as necessary, to a minimum depth of 1 foot below the bottom of the slab (depth D in the diagram below). Following the removal, scarify, moisten or dry as required, and compact all subgrade soils to a minimum depth of 8 inches. Replace the removed soils with properly compacted, imported, low to non-expansive, engineered fill material. The

aggregate base course below the slab may be included as part of the low to non-expansive engineered fill. In areas where dense limestone is encountered, scarification and recompaction is not required.

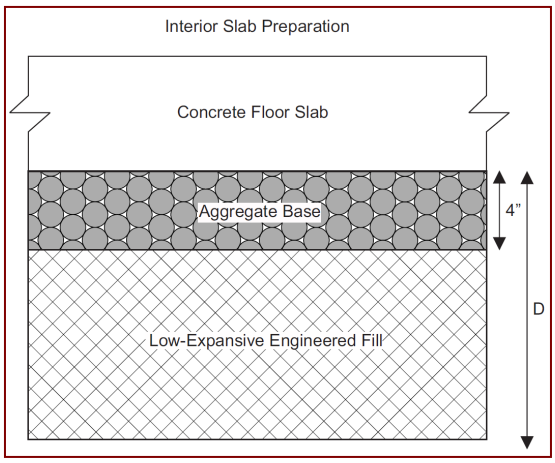

The subgrade preparation should be accomplished in a manner that will result in uniform water contents and densities after compaction.

7.7 Exterior Slab Preparation

The soils on this site have the potential to expand and shrink with changes in moisture content. In addition, frost penetration in the upper soils may cause surface heaving. Therefore, relatively lightweight exterior concrete flatwork such as sidewalks and patios may experience movements resulting in cracking or vertical offsets. To reduce the potential for damage, we recommend:

- Use of fill with low expansion potential
- Use of fill with low to negligible frost susceptibility
- Placement of effective control joints on relatively close centers
- Moisture-density control during placement of subbase fills
- Provision for adequate drainage in areas adjoining the slabs
- Use of designs which allow vertical movement between the exterior slabs and adjoining structural elements

It should be understood that these recommendations will help reduce the potential for soil movement and resulting distress, but will not eliminate this potential. Furthermore, the use of municipal specifications and details may not mitigate the potential for movements of the expansive or frost susceptible on-site soils.

7.8 Materials

a. Clean on-site native soils with a maximum dimension of 6 inches or imported materials may be used as fill material for the following:

- backfill (non-slab areas)
- Subbase fill in aggregate surfaced roadway areas

b. On-site clayey soils should not be used as subbase fill or backfill below any tanks, foundations, slabs-on-grade or behind any retaining walls. Imported soils with low expansive potential should be used in these areas.

c. Frozen soils should not be used as fill or backfill.

d. Lean mix (2-sack) concrete backfill should consist of aggregate base course type material combined with 2 sacks of cement per cubic yard. A coarse rock mix should not be used.

e. Imported soils should conform to the following:

- Gradation (ASTM C136): percent finer by weight

6"	100
4"	85-100
¾"	70-100
No. 4 Sieve	50-100
No. 200 Sieve	40 (max)

- Maximum expansive potential (%)[1] 1.5

- Maximum soluble sulfates (%) 0.10

f. Base course should conform to current Yavapai County specifications.

[1] Measured on a sample compacted to approximately 95 percent of the ASTM D698 maximum dry density at about 3 percent below optimum water content. The sample is confined under a 100 psf surcharge and submerged.

7.9 Placement and Compaction

a. Place and compact fill in horizontal lifts, using equipment and procedures that will produce recommended water contents and densities throughout the lift.

b. Uncompacted fill lifts should not exceed 8 inches.

c. Materials should be compacted to the following:

Material	Minimum Percent Compaction (ASTM D698)
• On-site soil, reworked:	
Below tanks	95
Below slabs-on-grade	90
Aggregate surfaced roadway areas	95
• On-site clayey soils, fill:	
Aggregate surfaced roadway areas	95
Landscape areas	85
• On-site low expansive potential soils, fill:	
Aggregate surfaced roadway areas	95
Below slabs-on-grade	95
Below tanks	95
• Imported soil, fill:	
Below slabs-on-grade	95
Below tanks	95
Aggregate surfaced roadway areas	95
• Aggregate base:	
Below slabs-on-grade	95
Below tanks	95
Aggregate surfaced roadway areas	100

Minimum Percent
Material Compaction (ASTM D698)

- Backfill:
  Structural 95
  Nonstructural 90

d. On-site soils should be compacted with a moisture content in the range of 1 percent below to 3 percent above optimum. Imported soils with low expansive potential and aggregate base course materials should be compacted with a moisture content in the range of 3 percent below to 3 percent above optimum.

7.10 Compliance

Recommendations for structural elements supported on compacted fills or prepared subgrade depend upon compliance with **EARTHWORK** recommendations. To assess compliance, observation and testing should be performed under the direction of a geotechnical engineer.

8.0 ADDITIONAL SERVICES

The recommendations provided in this report are based on the assumption that a sufficient schedule of tests and observations will be performed during construction to verify compliance. At a minimum, these tests and observations should be comprised of the following:

- Observations and testing during site preparation and earthwork;
- Observation of foundation excavations; and
- Consultation as may be required during construction.

Retaining the geotechnical engineer who developed your report to provide construction observation is the best way to verify compliance, and to help you manage the risks associated with unanticipated conditions.

9.0 LIMITATIONS

This report has been prepared assuming the project criteria described in Section 2.0. If changes in the project criteria occur, or if different subsurface conditions are encountered or become known, the conclusions and recommendations presented herein shall become invalid. In any such event, WT should be contacted in order to assess the effect that such variations may have on our conclusions and recommendations.

The recommendations presented are based entirely upon data derived from a limited number of samples obtained from widely spaced test pits/borings. The attached logs are indicators of subsurface conditions only at the specific locations and times noted. This report assumes the uniformity of the geology and soil structure between test pits/borings, however variations can and often do exist. Whenever any deviation, difference or change is encountered or becomes known, WT should be contacted.

This report is for the exclusive benefit of our client alone. There are no intended third-party beneficiaries of our contract with the client or this report, and nothing contained in the contract or this report shall create any express or implied contractual or any other relationship with, or claim or cause of action for, any third party against WT.

This report is valid for the earlier of one year from the date of issuance, a change in circumstances, or discovered variations. After expiration, no person or entity shall rely on this report without the express written authorization of WT.

10.0 CLOSURE

We prepared this report as an aid to the designers of the proposed project. The comments, statements, recommendations and conclusions set forth in this report reflect the opinions of the authors. These opinions are based upon data obtained at the location of the test pits/borings, and from laboratory tests. Work on your project was performed in accordance with generally accepted standards and practices utilized by professionals providing similar services in this locality. No other warranty, express or implied, is made.

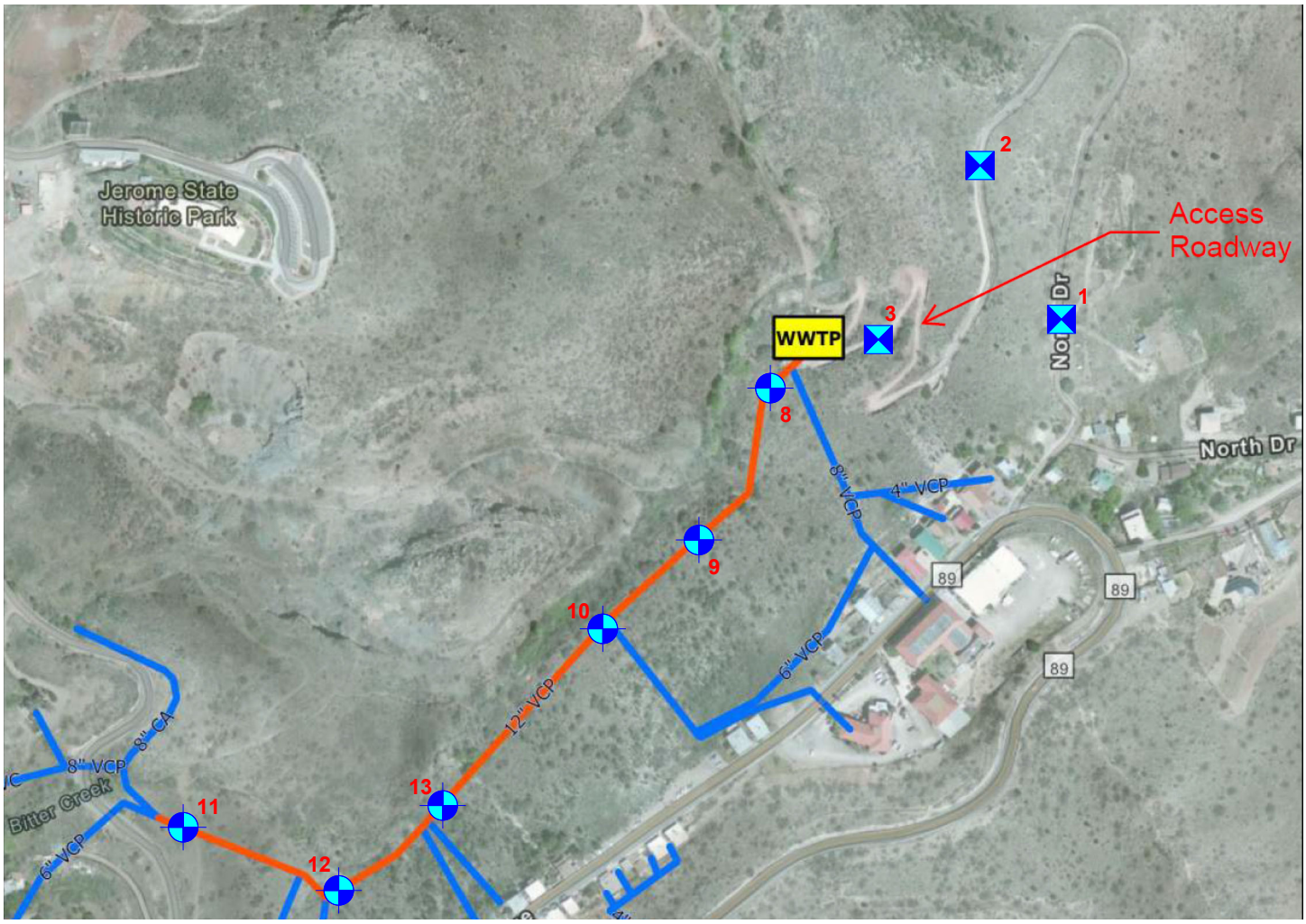

Not to Scale

Approximate Hand Auger Boring Location

Approximate Test Pit Location

JEROME WWTP UPGRADES	
Boring/Test Pit Location Diagram	
Western Technologies Inc.	
Job No.: 2522JW197	Plate: 1

Geotechnical Environmental Inspections Materials

Western Technologies Inc.
The Quality People
Since 1955

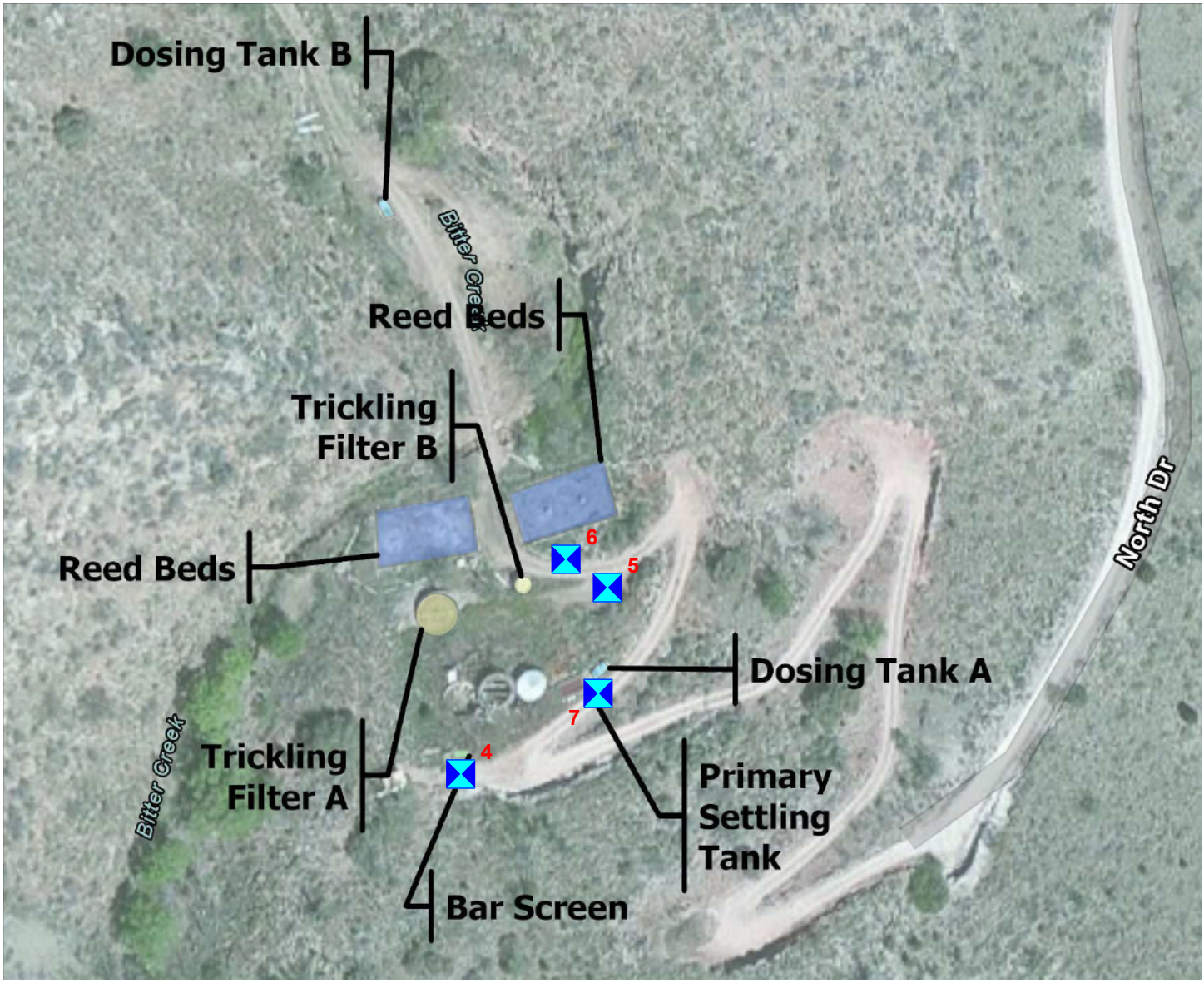

Not to Scale

Approximate Test Pit Location

JEROME WWTP UPGRADES	
Test Pit Location Diagram	
Western Technologies Inc.	
Job No.: 2522JW197	Plate: 2

Geotechnical
Environmental
Inspections
Materials

Western Technologies Inc.
The Quality People
Since 1955

Allowable Soil Bearing Capacity	The recommended maximum contact stress developed at the interface of the foundation element and the supporting material.
Backfill	A specified material placed and compacted in a confined area.
Base Course	A layer of specified aggregate material placed on a subgrade or subbase.
Base Course Grade	Top of base course.
Bench	A horizontal surface in a sloped deposit.
Caisson/Drilled Shaft	A concrete foundation element cast in a circular excavation which may have an enlarged base (or belled caisson).
Concrete Slabs-On-Grade	A concrete surface layer cast directly upon base course, subbase or subgrade.
Crushed Rock Base Course	A base course composed of crushed rock of a specified gradation.
Differential Settlement	Unequal settlement between or within foundation elements of a structure.
Engineered Fill	Specified soil or aggregate material placed and compacted to specified density and/or moisture conditions under observations of a representative of a soil engineer.
Existing Fill	Materials deposited through the action of man prior to exploration of the site.
Existing Grade	The ground surface at the time of field exploration.
Expansive Potential	The potential of a soil to expand (increase in volume) due to absorption of moisture.
Fill	Materials deposited by the actions of man.
Finished Grade	The final grade created as a part of the project.
Gravel Base Course	A base course composed of naturally occurring gravel with a specified gradation.
Heave	Upward movement.
Native Grade	The naturally occurring ground surface.
Native Soil	Naturally occurring on-site soil.
Rock	A natural aggregate of mineral grains connected by strong and permanent cohesive forces. Usually requires drilling, wedging, blasting or other methods of extraordinary force for excavation.
Sand and Gravel Base Course	A base course of sand and gravel of a specified gradation.
Sand Base Course	A base course composed primarily of sand of a specified gradation.
Scarify	To mechanically loosen soil or break down existing soil structure.
Settlement	Downward movement.
Soil	Any unconsolidated material composed of discrete solid particles, derived from the physical and/or chemical disintegration of vegetable or mineral matter, which can be separated by gentle mechanical means such as agitation in water.
Strip	To remove from present location.
Subbase	A layer of specified material placed to form a layer between the subgrade and base course.
Subbase Grade	Top of subbase.
Subgrade	Prepared native soil surface.

©81WTI 091614

COARSE-GRAINED SOILS

LESS THAN 50% FINES

GROUP SYMBOLS	DESCRIPTION	MAJOR DIVISIONS
GW	WELL-GRADED GRAVEL OR WELL-GRADED GRAVEL WITH SAND, LESS THAN 5% FINES	GRAVELS MORE THAN HALF OF COARSE FRACTION IS LARGER THAN NO. 4 SIEVE SIZE
GP	POORLY-GRADED GRAVEL OR POORLY-GRADED GRAVEL WITH SAND, LESS THAN 5% FINES	
GM	SILTY GRAVEL OR SILTY GRAVEL WITH SAND, MORE THAN 12% FINES	
GC	CLAYEY GRAVEL OR CLAYEY GRAVEL WITH SAND, MORE THAN 12% FINES	
SW	WELL-GRADED SAND OR WELL-GRADED SAND WITH GRAVEL, LESS THAN 5% FINES	SANDS MORE THAN HALF OF COARSE FRACTION IS SMALLER THAN NO. 4 SIEVE SIZE
SP	POORLY-GRADED SAND OR POORLY-GRADED SAND WITH GRAVEL, LESS THAN 5% FINES	
SM	SILTY SAND OR SILTY SAND WITH GRAVEL, MORE THAN 12% FINES	
SC	CLAYEY SAND OR CLAYEY SAND WITH GRAVEL, MORE THAN 12% FINES	

NOTE: Coarse-grained soils receive dual symbols if they contain 5% to 12% fines (e.g., SW-SM, GP-GC).

FINE-GRAINED SOILS

MORE THAN 50% FINES

GROUP SYMBOLS	DESCRIPTION	MAJOR DIVISIONS
ML	SILT, SILT WITH SAND OR GRAVEL, SANDY SILT, OR GRAVELLY SILT	SILTS AND CLAYS LIQUID LIMIT LESS THAN 50
CL	LEAN CLAY OF LOW TO MEDIUM PLASTICITY, SANDY CLAY, OR GRAVELLY CLAY	
OL	ORGANIC SILT OR ORGANIC CLAY OF LOW TO MEDIUM PLASTICITY	
MH	ELASTIC SILT, SANDY ELASTIC SILT, OR GRAVELLY ELASTIC SILT	SILTS AND CLAYS LIQUID LIMIT MORE THAN 50
CH	FAT CLAY OF HIGH PLASTICITY, SANDY FAT CLAY, OR GRAVELLY FAT CLAY	
OH	ORGANIC SILT OR ORGANIC CLAY OF HIGH PLASTICITY	
PT	PEAT AND OTHER HIGHLY ORGANIC SOILS	HIGHLY ORGANIC SOILS

NOTE: Fine-grained soils may receive dual classification based upon plasticity characteristics (e.g. CL-ML).

SOIL SIZES

COMPONENT	SIZE RANGE
BOULDERS	Above 12 in.
COBBLES	3 in. – 12 in.
GRAVEL	No. 4 – 3 in.
Coarse	¾ in. – 3 in.
Fine	No. 4 – ¾ in.
SAND	No. 200 – No. 4
Coarse	No. 10 – No. 4
Medium	No. 40 – No. 10
Fine	No. 200 – No. 40
Fines (Silt or Clay)	Below No. 200

NOTE: Only sizes smaller than three inches are used to classify soils

CONSISTENCY

CLAYS & SILTS	BLOWS PER FOOT
VERY SOFT	0 – 2
SOFT	3 – 4
FIRM	5 – 8
STIFF	9 – 15
VERY STIFF	16 – 30
HARD	OVER 30

RELATIVE DENSITY

SANDS & GRAVELS	BLOWS PER FOOT
VERY LOOSE	0 – 4
LOOSE	5 – 10
MEDIUM DENSE	11 – 30
DENSE	31 – 50
VERY DENSE	OVER 50

NOTE: Number of blows using 140-pound hammer falling 30 inches to drive a 2-inch-OD (1⅜-inch ID) split-barrel sampler (ASTM D1586).

PLASTICITY OF FINE GRAINED SOILS

PLASTICITY INDEX	TERM
0	NON-PLASTIC
1 – 7	LOW
8 – 20	MEDIUM
Over 20	HIGH

DEFINITION OF WATER CONTENT

DRY
SLIGHTLY DAMP
DAMP
MOIST
WET
SATURATED

©81 WTI
090414

The number shown in **"BORING NO."** or "**TEST PIT NO.**" refers to the approximate location of the same number indicated on the "Boring/Test Pit Location Diagram" as positioned in the field by pacing or measurement from property lines and/or existing features.

"DRILLING TYPE" refers to the exploratory equipment used in the boring. Hand auger methods were used. The dimension presented is the outside diameter of the auger used.

"EQUIPMENT TYPE" refers to the equipment used in the excavation of the test pit, and may include the width of the bucket on the excavator and the use of "rock" teeth or attachments.

"SAMPLE TYPE" refers to the form of sample recovery, in which **R** = Ring-lined sample, **G** = Grab sample.

"DRY DENSITY (LBS/CU FT)" refers to the laboratory-determined dry density in pounds per cubic foot. The symbol **"NR"** indicates that no sample was recovered.

"WATER (MOISTURE) CONTENT (% OF DRY WT.)" refers to the laboratory-determined water content in percent using the standard test method ASTM D2216.

"USCS" refers to the "Unified Soil Classification System" Group Symbol for the soil type as defined by ASTM D2487 and D2488. The soils were classified visually in the field, and where appropriate, classifications were modified by visual examination of samples in the laboratory and/or by appropriate tests.

These notes and boring/test pit logs are intended for use in conjunction with the purposes of our services defined in the text. Boring/test pit log data should not be construed as part of the construction plans nor as defining construction conditions.

Boring/test pit logs depict our interpretations of subsurface conditions at the locations and on the date(s) noted. Variations in subsurface conditions and characteristics may occur between borings/test pits. Groundwater levels may fluctuate due to seasonal variations and other factors.

The stratification lines shown on the boring/test pit logs represent our interpretation of the approximate boundary between soil or rock types based upon visual field classification at the boring/test pit location. The transition between materials is approximate and may be more or less gradual than indicated.

©81WTI
091614

DATE EXCAVATED: **9-16-22**
LOCATION: **See Location Diagram**
ELEVATION: **Not Determined**

TEST PIT NO. 1

EQUIPMENT: **CASE 580N**
EXCAVATION TYPE: **24" BUCKET**
FIELD ENGINEER: **C. Bartlett**

MOISTURE CONTENT (% OF DRY WT.)	DRY DENSITY (LBS/CU FT)	SAMPLE TYPE	SAMPLE	BLOWS/FT.	DEPTH (FEET)	USCS	GRAPHIC	SOIL DESCRIPTION
		G				GM		AGGREGATE BASE COURSE (3 Inches Thick) Silty GRAVEL; with sand, cobbles and boulders, tan, slightly damp
					5			**Excavation Stopped at 5 Feet**
					10			

N- **STANDARD PENETRATION TEST**
R- **RING SAMPLE**
C- **CORE: %RECOVERY/RQD**
G- **GRAB SAMPLE**
B- **BUCKET SAMPLE**

NOTES: **Groundwater Not Encountered**

THIS SUMMARY APPLIES ONLY AT THIS LOCATION AND AT THE TIME OF LOGGING. CONDITIONS MAY DIFFER AT OTHER LOCATIONS AND MAY CHANGE AT THIS LOCATION WITH TIME. DATA PRESENTED IS A SIMPLIFICATION.

Geotechnical Environmental Inspections Materials

Western Technologies Inc.
The Quality People
Since 1955

PROJECT: **JEROME WWTP IMPROVEMENTS**
PROJECT NO.: **2522JW197**

PLATE **A-4**

TEST PIT LOG

DATE EXCAVATED: **9-16-22**
LOCATION: **See Location Diagram**
ELEVATION: **Not Determined**

TEST PIT NO. 2

EQUIPMENT: **CASE 580N**
EXCAVATION TYPE: **24" BUCKET**
FIELD ENGINEER: **C. Bartlett**

MOISTURE CONTENT (% OF DRY WT.)	DRY DENSITY (LBS/CU FT)	SAMPLE TYPE	SAMPLE	BLOWS/FT.	DEPTH (FEET)	USCS	GRAPHIC	SOIL DESCRIPTION
		G				SC		Clayey SAND; with gravel, cobbles and boulders, tan, slightly damp
4.4	87	R		Push				
					5			**Excavation Stopped at 5 Feet**
					10			

N- **STANDARD PENETRATION TEST**
R- **RING SAMPLE**
C- **CORE: %RECOVERY/RQD**
G- **GRAB SAMPLE**
B- **BUCKET SAMPLE**

NOTES: **Groundwater Not Encountered**

THIS SUMMARY APPLIES ONLY AT THIS LOCATION AND AT THE TIME OF LOGGING. CONDITIONS MAY DIFFER AT OTHER LOCATIONS AND MAY CHANGE AT THIS LOCATION WITH TIME. DATA PRESENTED IS A SIMPLIFICATION.

Geotechnical Environmental Inspections Materials

Western Technologies Inc.
The Quality People
Since 1955

PROJECT: **JEROME WWTP IMPROVEMENTS**
PROJECT NO.: **2522JW197**

PLATE **A-5**

TEST PIT LOG

DATE EXCAVATED: **9-16-22**
LOCATION: **See Location Diagram**
ELEVATION: **Not Determined**

TEST PIT NO. 3

EQUIPMENT: **CASE 580N**
EXCAVATION TYPE: **24" BUCKET**
FIELD ENGINEER: **C. Bartlett**

MOISTURE CONTENT (% OF DRY WT.)	DRY DENSITY (LBS/CU FT)	SAMPLE TYPE	SAMPLE	BLOWS/FT.	DEPTH (FEET)	USCS	GRAPHIC	SOIL DESCRIPTION
		G				GC		Clayey GRAVEL; with sand, cobbles and boulders, tan, slightly damp
3.4	99	R		Push				
					5			**Excavation Stopped at 5 Feet**
					10			

N- **STANDARD PENETRATION TEST**
R- **RING SAMPLE**
C- **CORE: %RECOVERY/RQD**
G- **GRAB SAMPLE**
B- **BUCKET SAMPLE**

NOTES: **Groundwater Not Encountered**

THIS SUMMARY APPLIES ONLY AT THIS LOCATION AND AT THE TIME OF LOGGING. CONDITIONS MAY DIFFER AT OTHER LOCATIONS AND MAY CHANGE AT THIS LOCATION WITH TIME. DATA PRESENTED IS A SIMPLIFICATION.

Geotechnical Environmental Inspections Materials

Western Technologies Inc.
The Quality People
Since 1955

PROJECT: **JEROME WWTP IMPROVEMENTS**
PROJECT NO.: **2522JW197**

PLATE **A-6**

TEST PIT LOG

DATE EXCAVATED: **9-16-22**
LOCATION: **See Location Diagram**
ELEVATION: **Not Determined**

TEST PIT NO. 4

EQUIPMENT: **CASE 580N**
EXCAVATION TYPE: **24" BUCKET**
FIELD ENGINEER: **C. Bartlett**

MOISTURE CONTENT (% OF DRY WT.)	DRY DENSITY (LBS/CU FT)	SAMPLE TYPE	SAMPLE	BLOWS/FT.	DEPTH (FEET)	USCS	GRAPHIC	SOIL DESCRIPTION
		G				GC		Clayey GRAVEL; with sand, cobbles and boulders, light brown, slightly damp
					5			**Excavator Refusal at 3 Feet on LIMESTONE**
					10			

N- **STANDARD PENETRATION TEST**
R- **RING SAMPLE**
C- **CORE: %RECOVERY/RQD**
G- **GRAB SAMPLE**
B- **BUCKET SAMPLE**

NOTES: **Groundwater Not Encountered**

Geotechnical Environmental Inspections Materials

Western Technologies Inc.
The Quality People
Since 1955

PROJECT: **JEROME WWTP IMPROVEMENTS**
PROJECT NO.: **2522JW197**

PLATE **A-7**

TEST PIT LOG

THIS SUMMARY APPLIES ONLY AT THIS LOCATION AND AT THE TIME OF LOGGING. CONDITIONS MAY DIFFER AT OTHER LOCATIONS AND MAY CHANGE AT THIS LOCATION WITH TIME. DATA PRESENTED IS A SIMPLIFICATION.

DATE EXCAVATED: **9-16-22**
LOCATION: **See Location Diagram**
ELEVATION: **Not Determined**

TEST PIT NO. 5

EQUIPMENT: **CASE 580N**
EXCAVATION TYPE: **24" BUCKET**
FIELD ENGINEER: **C. Bartlett**

MOISTURE CONTENT (% OF DRY WT.)	DRY DENSITY (LBS/CU FT)	SAMPLE TYPE	SAMPLE	BLOWS/FT.	DEPTH (FEET)	USCS	GRAPHIC	SOIL DESCRIPTION
		G				GC		Clayey GRAVEL; with sand, cobbles and boulders, brown, damp
					5			
					10			**Excavator Refusal at 8 Feet on LIMESTONE**

N- **STANDARD PENETRATION TEST**
R- **RING SAMPLE**
C- **CORE: %RECOVERY/RQD**
G- **GRAB SAMPLE**
B- **BUCKET SAMPLE**

NOTES: **Groundwater Not Encountered**

THIS SUMMARY APPLIES ONLY AT THIS LOCATION AND AT THE TIME OF LOGGING. CONDITIONS MAY DIFFER AT OTHER LOCATIONS AND MAY CHANGE AT THIS LOCATION WITH TIME. DATA PRESENTED IS A SIMPLIFICATION.

Geotechnical Environmental Inspections Materials

Western Technologies Inc.
The Quality People
Since 1955

PROJECT: **JEROME WWTP IMPROVEMENTS**
PROJECT NO.: **2522JW197**

PLATE **A-8**

TEST PIT LOG

DATE EXCAVATED: **9-16-22**
LOCATION: **See Location Diagram**
ELEVATION: **Not Determined**

TEST PIT NO. 6

EQUIPMENT: **CASE 580N**
EXCAVATION TYPE: **24" BUCKET**
FIELD ENGINEER: **C. Bartlett**

MOISTURE CONTENT (% OF DRY WT.)	DRY DENSITY (LBS/CU FT)	SAMPLE TYPE	SAMPLE	BLOWS/FT.	DEPTH (FEET)	USCS	GRAPHIC	SOIL DESCRIPTION
		G			0	GC		Clayey GRAVEL; with sand, cobbles and boulders, brown, damp
					5			
					8			**Excavator Refusal at 8 Feet on LIMESTONE**
					10			

THIS SUMMARY APPLIES ONLY AT THIS LOCATION AND AT THE TIME OF LOGGING. CONDITIONS MAY DIFFER AT OTHER LOCATIONS AND MAY CHANGE AT THIS LOCATION WITH TIME. DATA PRESENTED IS A SIMPLIFICATION.

N- **STANDARD PENETRATION TEST**
R- **RING SAMPLE**
C- **CORE: %RECOVERY/RQD**
G- **GRAB SAMPLE**
B- **BUCKET SAMPLE**

NOTES: **Groundwater Not Encountered**

Geotechnical Environmental Inspections Materials

Western Technologies Inc.
The Quality People
Since 1955

PROJECT: **JEROME WWTP IMPROVEMENTS**
PROJECT NO.: **2522JW197**

PLATE **A-9**

TEST PIT LOG

DATE EXCAVATED: **9-16-22**
LOCATION: **See Location Diagram**
ELEVATION: **Not Determined**

TEST PIT NO. 7

EQUIPMENT: **CASE 580N**
EXCAVATION TYPE: **24" BUCKET**
FIELD ENGINEER: **C. Bartlett**

MOISTURE CONTENT (% OF DRY WT.)	DRY DENSITY (LBS/CU FT)	SAMPLE TYPE	SAMPLE	BLOWS/FT.	DEPTH (FEET)	USCS	GRAPHIC	SOIL DESCRIPTION
		G				GC		Clayey GRAVEL; with sand, cobbles and boulders, brown, damp
					5			**Excavator Refusal at 5 Feet on LIMESTONE**
					10			

N- **STANDARD PENETRATION TEST**
R- **RING SAMPLE**
C- **CORE: %RECOVERY/RQD**
G- **GRAB SAMPLE**
B- **BUCKET SAMPLE**

NOTES: **Groundwater Not Encountered**

THIS SUMMARY APPLIES ONLY AT THIS LOCATION AND AT THE TIME OF LOGGING. CONDITIONS MAY DIFFER AT OTHER LOCATIONS AND MAY CHANGE AT THIS LOCATION WITH TIME. DATA PRESENTED IS A SIMPLIFICATION.

Geotechnical Environmental Inspections Materials

Western Technologies Inc.
The Quality People
Since 1955

PROJECT: **JEROME WWTP IMPROVEMENTS**
PROJECT NO.: **2522JW197**

PLATE **A-10**

TEST PIT LOG

DATE DRILLED: **9-16-22**
LOCATION: **See Location Diagram**
ELEVATION: **Not Determined**

BORING NO. 8

EQUIPMENT TYPE: **HAND AUGER**
DRILLING TYPE: **4" DIA. AUGER**
FIELD ENGINEER: **C. Bartlett**

MOISTURE CONTENT (% OF DRY WT)	DRY DENSITY (LBS/CU FT)	SAMPLE TYPE	SAMPLE	BLOWS/FT.	DEPTH (FEET)	USCS	GRAPHIC	SOIL DESCRIPTION
		G				GC		Clayey GRAVEL; with sand, cobbles and boulders, brown, slightly damp
								Hand Auger Refusal at 1 Foot on Cobbles and Boulders
					5			
					10			

N- STANDARD PENETRATION TEST
R- RING SAMPLE
CA- CALIFORNIA MODIFIED SAMPLER
G- GRAB SAMPLE
B- BUCKET SAMPLE

NOTES: **Groundwater Not Encountered**

THIS SUMMARY APPLIES ONLY AT THIS LOCATION AND AT THE TIME OF LOGGING. CONDITIONS MAY DIFFER AT OTHER LOCATIONS AND MAY CHANGE AT THIS LOCATION WITH TIME. DATA PRESENTED IS A SIMPLIFICATION.

Geotechnical Environmental Inspections Materials

Western Technologies Inc.
The Quality People
Since 1955

PROJECT: **JEROME WWTP IMPROVEMENTS**
PROJECT NO.: **2522JW197**

PLATE **A-11**

BORING LOG

DATE DRILLED: **9-16-22**
LOCATION: **See Location Diagram**
ELEVATION: **Not Determined**

BORING NO. 9

EQUIPMENT TYPE: **HAND AUGER**
DRILLING TYPE: **4" DIA. AUGER**
FIELD ENGINEER: **C. Bartlett**

MOISTURE CONTENT (% OF DRY WT)	DRY DENSITY (LBS/CU FT)	SAMPLE TYPE	SAMPLE	BLOWS/FT.	DEPTH (FEET)	USCS	GRAPHIC	SOIL DESCRIPTION
		G				SC		Clayey SAND; with gravel, cobbles and boulders, brown, slightly damp
								Hand Auger Refusal at 1 Foot on Cobbles and Boulders
					5			
					10			

N- STANDARD PENETRATION TEST
R- RING SAMPLE
CA- CALIFORNIA MODIFIED SAMPLER
G- GRAB SAMPLE
B- BUCKET SAMPLE

NOTES: **Groundwater Not Encountered**

THIS SUMMARY APPLIES ONLY AT THIS LOCATION AND AT THE TIME OF LOGGING. CONDITIONS MAY DIFFER AT OTHER LOCATIONS AND MAY CHANGE AT THIS LOCATION WITH TIME. DATA PRESENTED IS A SIMPLIFICATION.

Geotechnical Environmental Inspections Materials

Western Technologies Inc.
The Quality People
Since 1955

PROJECT: **JEROME WWTP IMPROVEMENTS**
PROJECT NO.: **2522JW197**

PLATE
A-12

BORING LOG

DATE DRILLED: **9-16-22**
LOCATION: **See Location Diagram**
ELEVATION: **Not Determined**

BORING NO. 10

EQUIPMENT TYPE: **HAND AUGER**
DRILLING TYPE: **4" DIA. AUGER**
FIELD ENGINEER: **C. Bartlett**

MOISTURE CONTENT (% OF DRY WT)	DRY DENSITY (LBS/CU FT)	SAMPLE TYPE	SAMPLE	BLOWS/FT.	DEPTH (FEET)	USCS	GRAPHIC	SOIL DESCRIPTION
		G				GC		Clayey GRAVEL; with sand, cobbles and boulders, brown, slightly damp
								Hand Auger Refusal at 1 Foot on Cobbles and Boulders
					5			
					10			

N- STANDARD PENETRATION TEST
R- RING SAMPLE
CA- CALIFORNIA MODIFIED SAMPLER
G- GRAB SAMPLE
B- BUCKET SAMPLE

NOTES: **Groundwater Not Encountered**

THIS SUMMARY APPLIES ONLY AT THIS LOCATION AND AT THE TIME OF LOGGING. CONDITIONS MAY DIFFER AT OTHER LOCATIONS AND MAY CHANGE AT THIS LOCATION WITH TIME. DATA PRESENTED IS A SIMPLIFICATION.

Geotechnical Environmental Inspections Materials

Western Technologies Inc.
The Quality People
Since 1955

PROJECT: **JEROME WWTP IMPROVEMENTS**
PROJECT NO.: **2522JW197**

PLATE
A-13

BORING LOG

DATE DRILLED: **9-16-22**
LOCATION: **See Location Diagram**
ELEVATION: **Not Determined**

BORING NO. 11

EQUIPMENT TYPE: **HAND AUGER**
DRILLING TYPE: **4" DIA. AUGER**
FIELD ENGINEER: **C. Bartlett**

MOISTURE CONTENT (% OF DRY WT)	DRY DENSITY (LBS/CU FT)	SAMPLE TYPE	SAMPLE	BLOWS/FT.	DEPTH (FEET)	USCS	GRAPHIC	SOIL DESCRIPTION
		G				GC		Clayey GRAVEL; with sand, cobbles and boulders, brown, slightly damp
								Hand Auger Refusal at 1 Foot on Cobbles and Boulders
					5			
					10			

N- STANDARD PENETRATION TEST
R- RING SAMPLE
CA- CALIFORNIA MODIFIED SAMPLER
G- GRAB SAMPLE
B- BUCKET SAMPLE

NOTES: **Groundwater Not Encountered**

THIS SUMMARY APPLIES ONLY AT THIS LOCATION AND AT THE TIME OF LOGGING. CONDITIONS MAY DIFFER AT OTHER LOCATIONS AND MAY CHANGE AT THIS LOCATION WITH TIME. DATA PRESENTED IS A SIMPLIFICATION.

Geotechnical Environmental Inspections Materials

Western Technologies Inc.
The Quality People
Since 1955

PROJECT: **JEROME WWTP IMPROVEMENTS**
PROJECT NO.: **2522JW197**

PLATE
A-14

BORING LOG

DATE DRILLED: **9-16-22**
LOCATION: **See Location Diagram**
ELEVATION: **Not Determined**

BORING NO. 12

EQUIPMENT TYPE: **HAND AUGER**
DRILLING TYPE: **4" DIA. AUGER**
FIELD ENGINEER: **C. Bartlett**

MOISTURE CONTENT (% OF DRY WT)	DRY DENSITY (LBS/CU FT)	SAMPLE TYPE	SAMPLE	BLOWS/FT.	DEPTH (FEET)	USCS	GRAPHIC	SOIL DESCRIPTION
		G				GM		Silty GRAVEL; with sand, cobbles and boulders, brown, slightly damp
								Hand Auger Refusal at 1 Foot on Cobbles and Boulders
					5			
					10			

N- STANDARD PENETRATION TEST
R- RING SAMPLE
CA- CALIFORNIA MODIFIED SAMPLER
G- GRAB SAMPLE
B- BUCKET SAMPLE

NOTES: **Groundwater Not Encountered**

THIS SUMMARY APPLIES ONLY AT THIS LOCATION AND AT THE TIME OF LOGGING. CONDITIONS MAY DIFFER AT OTHER LOCATIONS AND MAY CHANGE AT THIS LOCATION WITH TIME. DATA PRESENTED IS A SIMPLIFICATION.

Geotechnical Environmental Inspections Materials

Western Technologies Inc.
The Quality People
Since 1955

PROJECT: **JEROME WWTP IMPROVEMENTS**
PROJECT NO.: **2522JW197**

PLATE
A-15

BORING LOG

DATE DRILLED: **9-16-22**
LOCATION: **See Location Diagram**
ELEVATION: **Not Determined**

BORING NO. 13

EQUIPMENT TYPE: **HAND AUGER**
DRILLING TYPE: **4" DIA. AUGER**
FIELD ENGINEER: **C. Bartlett**

MOISTURE CONTENT (% OF DRY WT)	DRY DENSITY (LBS/CU FT)	SAMPLE TYPE	SAMPLE	BLOWS/FT.	DEPTH (FEET)	USCS	GRAPHIC	SOIL DESCRIPTION
		G				GC		Clayey GRAVEL; with sand, cobbles and boulders, brown, slightly damp
								Hand Auger Refusal at 1 Foot on Cobbles and Boulders
					5			
					10			

N- STANDARD PENETRATION TEST
R- RING SAMPLE
CA- CALIFORNIA MODIFIED SAMPLER
G- GRAB SAMPLE
B- BUCKET SAMPLE

NOTES: **Groundwater Not Encountered**

THIS SUMMARY APPLIES ONLY AT THIS LOCATION AND AT THE TIME OF LOGGING. CONDITIONS MAY DIFFER AT OTHER LOCATIONS AND MAY CHANGE AT THIS LOCATION WITH TIME. DATA PRESENTED IS A SIMPLIFICATION.

Geotechnical Environmental Inspections Materials

Western Technologies Inc.
The Quality People
Since 1955

PROJECT: **JEROME WWTP IMPROVEMENTS**
PROJECT NO.: **2522JW197**

PLATE
A-16

BORING LOG

Test Pit/ Boring No.	Depth (ft)	USCS Class.	Particle Size Distribution (%) Passing by Weight							Atterberg Limits		Laboratory Compaction Characteristics			Remarks
			3"	¾"	#4	#10	#40	#200	2µ	LL	PI	Dry Density (pcf)	Optimum Moisture (%)	Method	
1	0-5	GM	100	71	56	48	31	15.5			NP				2
6	0-5	GC	100	69	50	41	30	18.3		43	18				2
7	0-5	GC	100	77	59	49	35	21.6		37	20				2
9	0-1	SC	100	87	71	57	40	25.6		41	16				2
12	0-1	GM	100	74	56	50	44	26.4		42	14				2

NOTE: NP = Non-plastic
µ = microns (2µ = 0.002mm)

REMARKS

Classification / Particle Size / Moisture-Density Relationship

1. Visual
2. Laboratory Tested
3. Minus #200 Only
4. Test Method ASTM D698/AASHTO T99
5. Test Method ASTM D1557/AASHTO T180
6. From the ADOT Family of Curves

Geotechnical Environmental Inspections Materials
Western Technologies Inc.
The Quality People
Since 1955
wt-us.com

PROJECT: TOWN OF JEROME WWTP IMPROVEMENTS

JOB NO.: 2522JW197

PLATE

B-1

SOIL PROPERTIES

Test Pit No.	Depth (ft.)	USCS Class.	Initial Dry Density (pcf)	Initial Water Content (%)	Laboratory Compaction Characteristics			Expansion Properties		Plasticity		Soluble		Remarks
					Dry Density(pcf)	Optimum Moisture(%)	Method	Surcharge (ksf)	Expansion (%)	LL	PI	Salts (ppm)	Sulfate (ppm)	
6	0-5	GC	91.5	17.4	96.4	20.3	A	0.1	1.9					1,2,3
7	0-5	GC	109.8	12.0	115.7	14.9	A	0.1	2.1					1,2,3

Notes: Initial Dry Density and Initial Water Content are remolded.

Remarks

1. Compacted density (approx. 95% of ASTM D698 max. density at moisture content slightly below optimum.)
2. Submerged to approximate saturation.
3. Test Method ASTM D698/AASHTO T99
4. Test Method ASTM D1557/AASHTO T180
5. From the ADOT Family of Curves

Geotechnical Environmental Inspections Materials

Western Technologies Inc. The Quality People Since 1955

wt-us.com

PROJECT: TOWN OF JEROME WWTP IMPROVEMENTS

JOB NO.: 2522JW197

SOIL PROPERTIES

PLATE

B-2

Test No.	Depth (ft)	Rock Classification	Unit Weight (pcf)	Unconfined Compressive Strength (psi)	Remarks
1	Surface	Limestone	166.7	4,150	1,2
2	Surface	Limestone	167.8	10,940	1,2

REMARKS:

1. ASTM D7012 – Unit Weight of Rock Cores
2. ASTM C39 – Unconfined Compressive Strength of Rock Cores

CORROSIVITY TEST RESULTS

The procedures for soil survey tests and observations can be found in Appendix X1.1 of ASTM A674-10 and includes five soil properties: earth resistivity • pH • redox potential • sulfides • moisture.

Test Pit 7(0-5):

Analysis	Results		Points
Resistivity (ohm-cm)	1401		10
pH	8.5		0
Redox Potential (mV)	+134		0
Sulfides	trace		2
Moisture	fair		1
		Total Points	13

Boring 12(0-1):

Analysis	Results		Points
Resistivity (ohm-cm)	2481		2
pH	8.1		0
Redox Potential (mV)	+314		0
Sulfides	trace		2
Moisture	fair		1
		Total Points	5

The test procedure states that if the sum of the points is greater than 10, the soil is considered corrosive to ductile iron pipe and special protection against exterior corrosion is necessary. This conclusion is limited to soil corrosion and does not include consideration of stray direct current.

MOTZZ LABORATORY, INC.

Report: 943846
Reported: 9/28/2022
Received: 9/26/2022
PO: 2522P176

Laboratory Analysis Report

Western Technologies - Flagstaff
Gregory L. E. Burr
2400 East Huntington
Flagstaff, AZ 86004-8934

Project: 2522JW197

Lab Number	Sample ID
943846-2	1 (0-5')

Test Parameter

Test	*Method*	*Result*	*Units*
Soluble Salts	ARIZ 237b	1162	ppm
Sulfate	ARIZ 733b	236	ppm
Chloride	ARIZ 736b	7	ppm

Lab Number	Sample ID
943846-1	12 (0-1')

Test Parameter

Test	*Method*	*Result*	*Units*
Soluble Salts	ARIZ 237b	303	ppm
Sulfate	ARIZ 733b	15	ppm
Chloride	ARIZ 736b	7	ppm
Redox Potential	ASTM G200-09	314	(Eo) mV

Plate B-5

BID FORM FOR CONSTRUCTION CONTRACT
ADDENDUM 1 VERSION

Contractor Name: _____

The terms used in this Bid with initial capital letters have the meanings stated in the Instructions to Bidders, the General Conditions, and the Supplementary Conditions.

ARTICLE 1—OWNER AND BIDDER

1.01 This Bid is submitted to:

Town of Jerome
Submitted electronically via email to tpierce@pacewater.com. Alternatively, Bidder may submit a hard copy the Town of Jerome, 600 Clark Street, Jerome, AZ 86331.

The undersigned Bidder proposes and agrees, if this Bid is accepted, to enter into an Agreement with Owner in the form included in the Bidding Documents to perform all Work as specified or indicated in the Bidding Documents for the prices and within the times indicated in this Bid and in accordance with the other terms and conditions of the Bidding Documents.

ARTICLE 2—ATTACHMENTS TO THIS BID

2.01 The following documents are submitted with and made a condition of this Bid:

A. Required Bid security;

B. List of Proposed Subcontractors;

~~C. List of Proposed Suppliers;~~

D. Evidence of authority to do business in the state of the Project; or a written covenant to obtain such authority within the time for acceptance of Bids;

E. Contractor's license number as evidence of Bidder's State Contractor's License or a covenant by Bidder to obtain said license within the time for acceptance of Bids;

F. Required Bidder Qualification Statement with supporting data; ~~and~~

G. If Bid amount exceeds $10,000, signed Compliance Statement (RD 400-6). Refer to specific equal opportunity requirements set forth in the Supplementary Conditions of the Construction Contract (EJCDC C-800);

H. If Bid amount exceeds $25,000, signed Certification Regarding Debarment, Suspension, Ineligibility and Voluntary Exclusion - Lower Tier Covered Transactions (AD-1048);

I. If Bid amount exceeds $100,000, signed RD Instruction 1940-Q Exhibit A-1, Certification for Contracts, Grants, and Loans.

ARTICLE 3—BASIS OF BID—LUMP SUM BID AND UNIT PRICES

3.01 *Lump Sum Bids*

A. Bidder will complete the Work in accordance with the Contract Documents for the following lump sum (stipulated) price(s), together with any Unit Prices indicated in Paragraph 3.02:

Copyright© 2018 National Society of Professional Engineers, American Council of Engineering Companies, and American Society of Civil Engineers. All rights reserved.

1. Lump Sum Price (Base Bid and Alternates)

BASE BID LUMP SUM BREAKDOWN					
	Item Description	**Unit**	**Estimated Qty**	**Bid Unit Price**	**Total Bid Price**
1	**ACCESS ROAD & SITE WORK**				
1.1	SWPPP	LS	1	$	$
1.2	Access Road (cut, grading, paving)	CY	4,440	$	$
1.3	Roadway Appurtenance (guardrail, gates, catch basins)	LS	1	$	$
1.4	Traffic Control	LS	1	$	$
2	**12" SEWER LINE IMPROVEMENTS**				
2.1	12" FPVC New Sewer Main	LF	143	$	$
2.2	Sewer Road Alignment Cut to Fill	CY	300	$	$
2.3	48" Manholes	EA	2	$	$
2.4	Bypass Plumbing and Equipment	LS	1	$	$
3	**TREATMENT PLANT SITE**				
3.1	Survey, Staking & Materials Testing	LS	1	$	$
3.2	Clearing & Grubbing	LS	1	$	$
3.3	Earthwork (Shoring, Erosion Control & Final Site Grading)	LS	1	$	$
3.4	Earthwork (Excavation, Fill & Backfill)	CY	2,495	$	$
3.5	Yard Piping	LS	1	$	$

Copyright© 2018 National Society of Professional Engineers, American Council of Engineering Companies, and American Society of Civil Engineers. All rights reserved.

BASE BID LUMP SUM BREAKDOWN					
	Item Description	**Unit**	**Estimated Qty**	**Bid Unit Price**	**Total Bid Price**
3.6	Fencing	LF	800	$	$
3.7	Blower / Admin Building	SF	750	$	$
3.8	Reed Bed Conversion to Drying Beds	LS	1	$	$
3.9	Wetland Cells Conversion to Emergency Overflow	LS	1	$	$
3.10	Retaining Walls	LF	262	$	$
3.11	Structural Concrete (SBR Tanks, Site, Chlorine Contact Channel)	CY	937	$	$
3.12	SBR Equipment	LS	1	$	$
3.13	Headworks Equipment	LS	1	$	$
3.14	Sludge Bagging Unit	LS	1	$	$
3.15	Polymer Dosing System	LS	1	$	$
3.16	Sludge Feed Pump	LS	1	$	$
3.17	Disinfection & Miscellaneous Equipment	LS	1	$	$
3.18	Site Electrical and Standby Generator	LS	1	$	$
3.19	Upgrade Site to 3 Phase Power	LS	1	$	$
4	**OTHER**				

Copyright© 2018 National Society of Professional Engineers, American Council of Engineering Companies, and American Society of Civil Engineers. All rights reserved.

BASE BID LUMP SUM BREAKDOWN					
	Item Description	**Unit**	**Estimated Qty**	**Bid Unit Price**	**Total Bid Price**
4.1	Mobilization/Demobilization	LS	1	$	$
4.2	Taxes	LS	1	$	$
				TOTAL BASE BID LUMP SUM AMOUNT	$

BID ALTERNATES LUMP SUM BREAKDOWN					
NEW 12" SEWER AND ACCESS ROAD					
	Item Description	**Unit**	**Estimated Qty**	**Bid Unit Price**	**Total Bid Price**
1	**Bid Adder:** 12" FPVC New Sewer Main	LF	2,750	$	$
2	**Bid Adder:** Restore Lateral Connections	EA	5	$	$
3	**Bid Adder:** Sewer Road Alignment Cut to Fill	CY	3,266	$	$
4	**Bid Adder:** 48" Manholes	EA	10	$	$
5	**Bid Adder:** Rockfall Barrier	LF	150	$	$
				TOTAL ALTERNATES LUMP SUM AMOUNT	

TOTAL LUMP SUM PRICE (BASE BID AND ALTERNATES)		
	Item Description	**Total Bid Price**
1	Total Lump Sum for Base Bid	$
2	Total Lump Sum for Bid Adder: New 12" Sewer and Access Road	$

Copyright© 2018 National Society of Professional Engineers, American Council of Engineering Companies, and American Society of Civil Engineers. All rights reserved.

TOTAL LUMP SUM BASE BID AND ALTERNATES PRICE	$

B. All specified cash allowance(s) are included in the price(s) set forth below, and have been computed in accordance with Paragraph 13.02 of the General Conditions.

TOTAL ALLOWANCE PRICE		
	Item Description	**Total Bid Price**
1	Materials Testing	$
	TOTAL ALLOWANCE PRICE	$

ARTICLE 4—DELETED

ARTICLE 5—DELETED

ARTICLE 6—TIME OF COMPLETION

6.01 Bidder agrees that the Work will be substantially complete and will be completed and ready for final payment in accordance with Paragraph 15.06 of the General Conditions on or before the dates or within the number of calendar days indicated in the Agreement.

6.02 **[Deleted]**

6.03 **[Deleted]**

6.04 Bidder accepts the provisions of the Agreement as to liquidated damages.

ARTICLE 7—BIDDER'S ACKNOWLEDGEMENTS: ACCEPTANCE PERIOD, INSTRUCTIONS, AND RECEIPT OF ADDENDA

7.01 *Bid Acceptance Period*

A. This Bid will remain subject to acceptance for 60 days after the Bid opening, or for such longer period of time that Bidder may agree to in writing upon request of Owner.

7.02 *Instructions to Bidders*

A. Bidder accepts all of the terms and conditions of the Instructions to Bidders, including without limitation those dealing with the disposition of Bid security.

7.03 *Receipt of Addenda*

A. Bidder hereby acknowledges receipt of the following Addenda:

Addendum Number	Addendum Date

Copyright© 2018 National Society of Professional Engineers, American Council of Engineering Companies, and American Society of Civil Engineers. All rights reserved.

7.04 **[Deleted]**

ARTICLE 8—BIDDER'S REPRESENTATIONS AND CERTIFICATIONS

8.01 *Bidder's Representations*

A. In submitting this Bid, Bidder represents the following:

1. Bidder has examined and carefully studied the Bidding Documents, including Addenda.

2. [Deleted]

3. Bidder is familiar with all Laws and Regulations that may affect cost, progress, and performance of the Work**, including all American Iron and Steel requirements.**

4. Bidder has carefully studied the reports of explorations and tests of subsurface conditions at or adjacent to the Site and the drawings of physical conditions relating to existing surface or subsurface structures at the Site that have been identified in the Supplementary Conditions, with respect to the Technical Data in such reports and drawings.

5. Bidder has carefully studied the reports and drawings relating to Hazardous Environmental Conditions, if any, at or adjacent to the Site that have been identified in the Supplementary Conditions, with respect to Technical Data in such reports and drawings.

6. Bidder has considered the information known to Bidder itself; information commonly known to contractors doing business in the locality of the Site; information and observations obtained from visits to the Site; the Bidding Documents; and the Technical Data identified in the Supplementary Conditions or by definition, with respect to the effect of such information, observations, and Technical Data on (a) the cost, progress, and performance of the Work; (b) the means, methods, techniques, sequences, and procedures of construction to be employed by Bidder, if selected as Contractor; and (c) Bidder's (Contractor's) safety precautions and programs.

7. Based on the information and observations referred to in the preceding paragraph, Bidder agrees that no further examinations, investigations, explorations, tests, studies, or data are necessary for the performance of the Work at the Contract Price, within the Contract Times, and in accordance with the other terms and conditions of the Contract.

8. Bidder is aware of the general nature of work to be performed by Owner and others at the Site that relates to the Work as indicated in the Bidding Documents.

9. Bidder has given Engineer written notice of all conflicts, errors, ambiguities, or discrepancies that Bidder has discovered in the Bidding Documents, and of discrepancies between Site conditions and the Contract Documents, and the written resolution thereof by Engineer is acceptable to Contractor.

10. The Bidding Documents are generally sufficient to indicate and convey understanding of all terms and conditions for performance and furnishing of the Work.

Copyright© 2018 National Society of Professional Engineers, American Council of Engineering Companies, and American Society of Civil Engineers. All rights reserved.

11. The submission of this Bid constitutes an incontrovertible representation by Bidder that without exception the Bid and all prices in the Bid are premised upon performing and furnishing the Work required by the Bidding Documents.

8.02 *Bidder's Certifications*

A. The Bidder certifies the following:

1. This Bid is genuine and not made in the interest of or on behalf of any undisclosed individual or entity and is not submitted in conformity with any collusive agreement or rules of any group, association, organization, or corporation.

2. Bidder has not directly or indirectly induced or solicited any other Bidder to submit a false or sham Bid.

3. Bidder has not solicited or induced any individual or entity to refrain from bidding.

4. Bidder has not engaged in corrupt, fraudulent, collusive, or coercive practices in competing for the Contract. For the purposes of this Paragraph 8.02.A:

a. Corrupt practice means the offering, giving, receiving, or soliciting of anything of value likely to influence the action of a public official in the bidding process.

b. Fraudulent practice means an intentional misrepresentation of facts made (a) to influence the bidding process to the detriment of Owner, (b) to establish bid prices at artificial non-competitive levels, or (c) to deprive Owner of the benefits of free and open competition.

c. Collusive practice means a scheme or arrangement between two or more Bidders, with or without the knowledge of Owner, a purpose of which is to establish bid prices at artificial, non-competitive levels.

d. Coercive practice means harming or threatening to harm, directly or indirectly, persons or their property to influence their participation in the bidding process or affect the execution of the Contract.

Copyright© 2018 National Society of Professional Engineers, American Council of Engineering Companies, and American Society of Civil Engineers. All rights reserved.

BIDDER hereby submits this Bid as set forth above:

Bidder:

_____

(typed or printed name of organization)

By: _____

(individual's signature)

Name: _____

(typed or printed)

Title: _____

(typed or printed)

Date: _____

(typed or printed)

If Bidder is a corporation, a partnership, or a joint venture, attach evidence of authority to sign.

Attest: _____

(individual's signature)

Name: _____

(typed or printed)

Title: _____

(typed or printed)

Date: _____

(typed or printed)

Address for giving notices:

_____

_____

Bidder's Contact:

Name: _____

(typed or printed)

Title: _____

(typed or printed)

Phone: _____

Email: _____

Address:

_____

_____

_____

Bidder's Contractor License No.: (if applicable) _____

Copyright© 2018 National Society of Professional Engineers, American Council of Engineering Companies, and American Society of Civil Engineers. All rights reserved.

Jerome Wastewater Treatment Plant Improvements

ADDENDUM #2

Date: May 11, 2026

Quest CDN #9117808

This addendum is to formally issue responses to bidder questions and minor modifications. Reminder: Acknowledge receipt of this addendum on the Bid Form.

Attachments:

1. Attachment 1 – Jerome WWTP Improvements Plan Set
2. Attachment 2 – C-410 Bid Form

Clarifications

1. It was brought to our attention that the construction plan set included in the bid manual appears to be scaled to 8.5” x 11”. If there are any difficulties obtaining the correct plan size, 24” x 36” construction plans are **attached.**
2. The bid form quantities (form C-410 – Bid Form) have been updated. The updated bid form is **attached.** Please note that bidders are responsible for their own quantity takeoffs.

8723 E. Via de Commercio, #A-204 | Scottsdale, AZ 85258
P: (480) 991-3595 F: (480) 751-1810 | www.pacewater.com

TOWN OF JEROME

YAVAPAI COUNTY, ARIZONA

WASTEWATER TREATMENT PLANT

100% ISSUED FOR BID

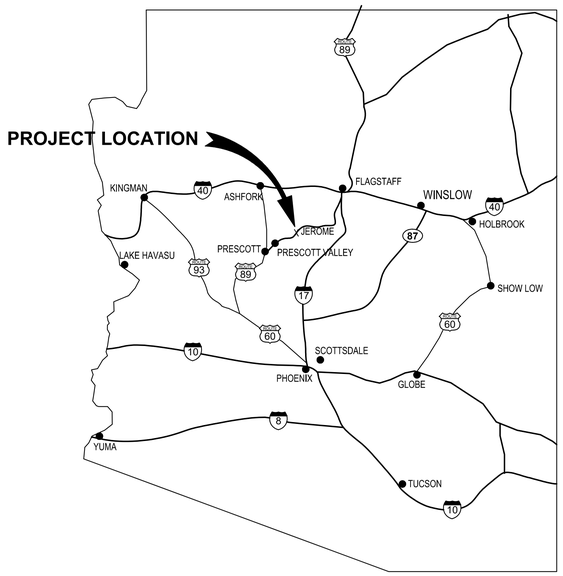

LOCATION MAP

N.T.S.

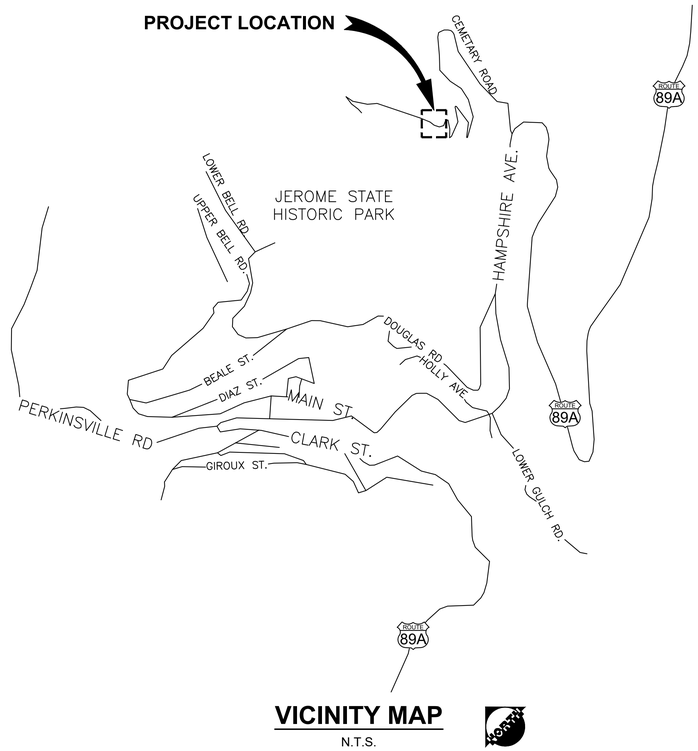

VICINITY MAP

N.T.S.

SURVEY DETAILS:

1. COORDINATES WERE VERIFIED IN THE FIELD USING REAL TIME KINEMATIC GPS OBSERVATIONS RELATIVE TO PUBLISHED CONTROL POINTS.
2. SURVEYED DURING THE MONTH OF DECEMBER 2022.
3. CONTRACTOR SHALL VERIFY HORIZONTAL AND VERTICAL CONTROLS IN THE FIELD PRIOR TO CONSTRUCTION.
4. PROJECT METADATA:
   - UNITS:
     COORDINATES, DISTANCE AND ELEVATIONS ARE SHOWN IN INTERNATIONAL FEET.
   - HORIZONTAL DATUM (BASIS OF BEARINGS):
     NAD83 (2011 Epoch) ARIZONA CENTRAL ZONE
   - VERTICAL DATUM:
     NAVD '88
   - PROJECT BENCHMARK:
     POINT NUMBER 1
     PRIMARY BENCHMARK DESCRIBED AS: SET 1/2" REBAR
     SET REBAR WITH OPUS PROCESSED SOLUTION:
     GRID NORTHING = 1365466.36
     GRID EASTING = 643466.42
     OPUS ELEVATION = 4827.11
5. THE COORDINATES PRESENTED ARE SHOWN TO THREE DECIMAL PLACES FOR CALCULATION PURPOSES AND ARE NOT REPRESENTATIVE OF THE PRECISION OF THE SURVEY MEASUREMENTS.
6. THIS NOT A PROPERTY BOUNDARY SURVEY.

PROJECT ADDRESS:

TOWN OF JEROME WASTEWATER TREATMENT PLANT
SEWER PLANT ROAD
JEROME, AZ 86331

PRINCIPAL OWNER:

TOWN OF JEROME
600 CLARK STREET, P.O. BOX 335
JEROME, AZ 86331

GEODETIC CONTROL:

PT	NORTHING	EASTING	ELEVATION
1	1365466.36	643466.42	4827.11
2	1365826.06	643587.50	4801.17
3	1365527.64	643545.12	4815.50
4	1364201.32	642110.19	4832.28
5	1364259.41	642191.45	4827.73
6	1365024.28	642592.65	4654.33

CONSULTANTS:

ENGINEER OF RECORD

PACIFIC ADVANCED CIVIL ENGINEERING (PACE)
8723 E. VIA de COMMERCIO, #A204
SCOTTSDALE, AZ 85258
BUSINESS LICENSE NO. 1006013
(480) 991-3595
CONTACT: TAYLOR PIERCE, P.E.
CONTACT: MIKE KREBS, P.E.

CIVIL ENGINEER
SEC ENGINEERING
825 COVE PARKWAY
COTTONWOOD, AZ 86326
(928) 282-7787
CONTACT: KRISHAN GINIGE

STRUCTURAL ENGINEER:
PK ASSOCIATES
6900 E. BELLEVIEW AVENUE, SUITE 200
GREENWOOD VILLAGE, CO 80111
(720) 799-1053
CONTACT: JAMES APPLEYARD

ELECTRICAL ENGINEER:
WRIGHT ENGINEERING
165 E. CHILTON DRIVE
CHANDLER, AZ 85225
(480) 497-5829
CONTACT: JACOB BIELEFELDT

FINAL DESIGN APPROVAL:

BY: Brett Kai DATE: 4/21/2026
TOWN MANAGER
THE TOWN APPROVES THESE PLANS FOR CONCEPT ONLY AND IS NOT LIABLE FOR ERRORS OR OMISSIONS

RECORD DRAWING:

THESE RECORD DRAWINGS HAVE BEEN PREPARED BASED ON INFORMATION PROVIDED BY THE CONSTRUCTION CONTRACTOR. THE ENGINEER HAS INSPECTED THE COMPLETED FACILITIES AND CERTIFIES THAT THEY ARE A SUBSTANTIALLY ACCURATE PRESENTATION OF THE LAYOUT AND CONDITION OF THE CONSTRUCTED PROJECT.

NAME _____(SEAL)
REGISTRATION NO. _____ DATE _____
REVD. BY: _____
FIELD ENGINEERING

100% ISSUED FOR BID

PREPARED BY: TAYLOR B. PIERCE R.C.E 70097 DATE

PACE
Advanced Water Engineering
8723 E. VIA de COMMERCIO, SUITE A, SCOTTSDALE, CA 85258
P. (480) 991-3595 | www.pacewater.com

NO	BY	DATE	REVISIONS	DATE	APP.

Registered Professional Engineer (Civil)
CERTIFICATE NO. 70097
Signed
TAYLOR B. PIERCE
ARIZONA, U.S.A.
Expires 12/31/28

PREPARED BY: PACE
DESIGNED BY: NE
DRAWN BY: DS, WW
CHECKED BY: TP
SCALE: AS NOTED
DATE: NOV 2025
JOB NO. B614

TITLE: TITLE SHEET

JOB: TOWN OF JEROME WASTEWATER TREATMENT PLANT — YAVAPAI CO. AZ

SHEET
G1.0
1 OF 99 SHEETS

JOB NO. B614

THESE DRAWINGS ARE THE PROPERTY OF P.A.C.E. AND SHALL NOT BE REPRODUCED IN ANY MANNER NOR BE USED FOR CONSTRUCTION UNLESS STAMPED 'ISSUED FOR CONSTRUCTION'.

W:\B614\Engineering\B614-30\sheets\B614 - G1.0 TITLE SHEET.dwg - Tab: G1.0 - by nsddrgton on 04/21/26 at 12:17:57 PM

SHEET INDEX

DWG No.	SHT No.	TITLE
GENERAL		
1	G1.0	TITLE SHEET
2	G1.1	SHEET INDEX
3	G2.0	GENERAL NOTES AND ABBREVIATIONS
4	G3.0	HYDRAULIC PROFILE
5	G3.1	HYDRAULIC PROFILE
6	G3.2	PROCESS FLOW DIAGRAM
CIVIL		
7	C-1.0	NOTES
8	C-1.1	NOTES 2, LEGENDS, ABBREVIATIONS
9	C-1.2	TYPICAL SECTIONS
10	C-2.0	GRADING SITE MAP, SURVEY CONTROL
11	C-2.1	WWTP SITE GRADING-10SC
12	C-2.2	NORTH DR IMPROVEMENTS
13	C-2.3	WWTP ACCESS RD P&P 25+00+TO 30+00
14	C-2.4	WWTP ACCESS RD P&P 30+00 TO 35+00
15	C-2.5	WWTP ACCESS RD P&P 35+00 TO 37+50
16	C-2.6	WWTP ACCESS RD P&P 37+50 TO 39+75
17	C-2.7	NEW SEWER ACCESS ROAD
18	C-3.0	NEW SEWER SITE MAP, SURVEY CONTROL
19	C-3.1	NEW SEWER P&P
20	C-4.0	ALT SEWER SITE MAP, SURVEY CONTROL
21	C-4.1	ALT SEWER P&P 10+00 TO 15+25
22	C-4.2	ALT SEWER P&P 15+25 TO 20+50
23	C-4.3	ALT SEWER P&P 15+25 TO 20+50
24	C-4.4	ALT SEWER WEST TURNAROUND
25	C-4.5	ALT SEWER LATERAL PROFILES
MECHCANICAL		
26	M1.0	EXISTING SITE PLAN
27	M1.1	DEMOLITION PLAN PH-I
28	M1.2	DEMOLITION PLAN PH-II
29	M2.0	PROPOSED SITE PLAN
30	M2.1	YARD PIPING & GRADING PLAN
31	M2.2	YARD PIPING
32	M2.3	YARD PIPING
33	M2.4	YARD PIPING
34	M2.5	PLAN & PROFILE
35	M3.0	SBR MECHANICAL PLAN
36	M3.1	SBR MECHANICAL PLAN
37	M3.2	SBR MECHANICAL SECTIONS
38	M4.0	DEWATERING & CCC MECH PLAN
39	M4.1	CHLORINE CONTACT BASIN SECTION
40	M4.2	DEWATERING SECTION
41	M5.0	SLUDGE DRYING BEDS PLAN
42	M5.1	SLUDGE DRYING BEDS SECTIONS
43	M5.2	DRYING BED LIFT STATION SECTIONS
44	M6.0	EMERGENCY OVERFLOW BASIN PLAN AND SECTIONS
45	M7.0	BLOWER OPS PLAN
46	M8.0	MECHANICAL DETAILS I
47	M8.1	MECHANICAL DETAILS II
48	M8.2	MECHANICAL DETAILS III
49	M8.3	MECHANICAL DETAILS IV
50	M8.4	MECHANICAL DETAILS V
51	M8.5	MECHANICAL DETAILS VI
STRUCTURAL		
52	S1.1	GENERAL STRUCTURAL NOTES
53	S1.2	GENERAL STRUCTURAL NOTES
54	S1.3	TYPICAL DETAILS
55	S1.4	TYPICAL DETAILS
56	S1.5	TYPICAL DETAILS
57	S1.6	TYPICAL DETAILS
58	S1.7	TYPICAL DETAILS
59	S2.0	FOUNDATION PLAN
60	S2.01	FRAMING PLAN
61	S2.10	FRAMING PLAN
62	S3.1	FOUNDATION DETAILS
63	S3.2	FOUNDATION DETAILS
64	S3.3	FOUNDATION DETAILS
65	S4.1	FRAMING DETAILS
66	S4.2	FRAMING DETAILS

ARCHITECTURAL		
67	A1.0	BLOWER OPS ARCH PLAN
68	A2.0	BLOWER OPS ARCH REFLECTED CEILING PLAN
69	A3.0	BLOWER OPS ARCH SEWER & PLUMBING PLAN
70	A4.0	BLOWER OPS ARCH ELEVATIONS & SECTIONS
ELECTRICAL		
71	E1.1	ELECTRICAL COVER SHEET
72	E1.2	ELECTRICAL LEGEND
73	E2.1	SINGLE LINE DIAGRAM I
74	E2.2	SINGLE LINE DIAGRAM II
75	E2.3	LOAD CALCULATIONS
76	E2.4	WIRE & COND TABLES I
77	E2.5	WIRE & COND TABLES II
78	E3.1	ELECTRICAL PROPOSED SITE PLAN
79	E3.2	ELECTRICAL SBR PLAN
80	E3.3	ELECTRICAL DEWATERING PAD
81	E3.4	ELECTRICAL BLOWER OPS
82	E3.5	ELECTRICAL DRYING BED LIFT STATION
83	E3.6	ELECTRICAL OVERFLOW BASIN
84	E4.1	ELECTRICAL DETAILS I
85	E4.2	ELECTRICAL DETAILS II
86	E4.3	ELECTRICAL DETAILS III
87	E4.4	ELECTRICAL DETAILS IV
88	E4.5	ELECTRICAL DETAILS V
89	E4.6	ELECTRICAL DETAILS VI
90	E5.1	ELECTRICAL SCHEMATICS I
91	E5.2	ELECTRICAL SCHEMATICS II
92	E5.3	ELECTRICAL SCHEMATICS III
P&ID		
93	I0.0	P&ID GENERAL NOTES
94	I1.0	HEADWORKS
95	I1.1	SEQUENCING BATCH REACTOR
96	I1.2	CHLORINE CONTACT & DIGESTER
97	I1.3	BLOWER ROOM
98	I1.4	DEWATERING & LIFT STATIONS
99	I1.5	GENERATOR

LEGEND

- ASPHALT
- DECOMPOSED GRAVEL FILL
- CONCRETE
- SAND
- BACKFILL
- ENGINEERED BACKFILL
- DEMO
- EXISTING 1' CONTOUR
- CONSTRUCTION NOTES INCL. FITTINGS, VALVES & MISC. EQUIPMENT (SEE THE SAME SHT.)
- THRUST BLOCK
- EQUIPMENT

ABBREVIATIONS

AB	AGGREGATE BASE
AC	ASPHALT CONCRETE
A/C	AIR CONDITIONER
ADF	AVERAGE DAY FLOW
APPROX	APPROXIMATELY
ARCH	ARCHITECTURAL
ARV	AIR RELEASE VALVE
AUTO	AUTOMATIC
AUX	AUXILIARY
AVV	AIR VACUUM VALVE
AWS	ALARM WATER SURFACE
BO	BLOWOFF
BC	BEGINNING OF CURVE
BF	BLIND FLANGE
BLDG	BUILDING
BM	BEAM, BENCHMARK
BOD	BIOCHEMICAL OXYGEN DEMAND
BOS	BOTTOM OF SURFACE
BOT	BOTTOM
BVC	BEGIN VERTICAL CURVE
CATV	CABLE TELEVISION
CFH	CUBIC FOOT PER HOUR
CFM	CUBIC FOOT PER MINUTE
CFS	CUBIC FOOT PER SECOND
CH	CHUCK
CMU	CONCRETE MASONRY UNIT
CO	CLEANOUT
COTG	CLEANOUT TO GRADE
CONST	CONSTRUCTION
CPLG	COUPLING
CPVC	CHLORINATED POLYVINYL CHLORIDE
CTR	CENTER
CV	CHECK VALVE
CW	COLD WATER
CYL	CYLINDER
D	DRAIN
DAF	DISSOLVED AIR FLOATATION
DI	DROP INLET
DIA	DIAMETER
DIP	DUCTILE IRON PIPE
DO	DISSOLVED OXYGEN
DTL	DETAILS
DWG	DRAWING
E	ELECTRICAL
EA	EACH
EC	END OF CURVE
ECC	ECCENTRIC
EF	EACH FACE
EFF	EFFLUENT
EL	ELEVATION
EP	EDGE OF PAVEMENT
EQUIP	EQUIPMENT
EW	EACH WAY
EXH	EXHAUST
EX	EXISTING
FC	FLEXIBLE COUPLING
FD	FLOOR DRAIN
FF	FINISHED FLOOR
FG	FINISHED GROUND
FH	FIRE HYDRANT
FL	FLOW LINE
FLEX	FLEXIBLE
FLG	FLANGE
FM	FORCE MAIN
FPS	FEET PER SECOND
FS	FINISHED SLAB
FT	FEET
FUT	FUTURE
G	GAS
GA	GAUGE
GAL	GALLONS
GALV	GALVANIZED
GB	GRADE BREAK
GPD	GALLONS PER DAY
GPM	GALLONS PER MINUTE
H/A	HAND AUTOMATIC
HDPE	HIGH DENSITY POLYETHYLENE
HOA	HAND-OFF-AUTOMATIC
HORIZ	HORIZONTAL
HP	HIGH POINT
HWL	HIGH WATER LEVEL
HWS	HIGH WATER SURFACE
HZ	HERTZ
ID	INSIDE DIAMETER
I&C	INSTRUMENTATION & CONTROLS INTEGRATOR
IN	INCHES
INF	INFLUENT
IRR	IRRIGATION
INV	INVERT
JB	JUNCTION BOX
LBS	POUNDS
LBS/D	POUNDS PER DAY
LF	LINEAR FEET
LP	LOW PRESSURE
LWL	LOW WATER LEVEL
LWS	LOW WATER SURFACE
MAX	MAXIMUM
MCC	MOTOR CONTROL CENTER
MECH	MECHANICAL
MFR	MANUFACTURER
MGD	MILLION GALLONS PER DAY
MG/L	MILLIGRAMS PER LITER
MH	MANHOLE OR MAINTENANCE HOLE
MIN	MINIMUM, MINUTE
MISC	MISCELLANEOUS
MJ	MECHANICAL JOINT
MLSS	MIXED LIQUOR SUSPENDED SOLIDS
MMADF	MAX MONTH AVERAGE DAY FLOW
N	NORTHING
N/C	NORMALLY CLOSED
N/O	NORMALLY OPEN
NTS	NOT TO SCALE
NWL	NORMAL WATER LEVEL
NPSH	NET POSITIVE SUCTION HEAD
OC	ON CENTER
OD	OUTSIDE DIAMETER
PG	PRESSURE GAUGE
PI	POINT OF INTERSECTION
PO	PUSH ON
PP	POWER POLE, PIPE PENETRATION
PRFV	PRESSURE RELIEF VALVE
PRC	POINT OF REVERSE CURVE
PRV	PRESSURE REGULATING (REDUCING) VALVE
PS	PRESSURE SWITCH, PIPE SUPPORT
PSI	POUNDS PER SQUARE INCH
PV	PLUG VALVE
PVC	POLYVINYL CHLORIDE
PVMT	PAVEMENT
PW	POTABLE WATER
R	RADIUS
RAS	RETURN ACTIVATED SLUDGE
RED	REDUCER
REQ'D	REQUIRED
RPM	REVOLUTIONS PER MINUTE
RQMT	REQUIREMENT
R&R	REMOVE AND RELOCATE (REINSTALL)
R&S	REMOVE AND SAVE (SALVAGE)
R/W	RIGHT OF WAY
R&W	REMOVE AND WASTE
RW	RECLAIMED WATER
S	SLOPE
SS	SANITARY SEWER
SSMH	SANITARY SEWER MANHOLE
SBR	SEQUENCING BATCH REACTOR
SD	STORM DRAIN
SE	SECONDARY EFFLUENT
SEC	SECTION
SHT	SHEET
SOV	SHUT OFF VALVE
SPEC	SPECIFICATION
SQ	SQUARE
SS	STAINLESS STEEL
ST	STREET
STA	STATION
T&B	TOP AND BOTTOM
TB	THRUST BLOCK
TBA	TO BE ABANDONED
TDH	TOTAL DYNAMIC HEAD
TEL	TELEPHONE
TEMP	TEMPERATURE
TOS	TOP OF SLAB
TOW	TOP OF WALL
TYP	TYPICAL
UNO	UNLESS NOTED OTHERWISE
VAC	VOLTS ALTERNATING CURRENT
VDC	VOLTS DIRECT CURRENT
VERT	VERTICAL
VCP	VITRIFIED CLAY PIPE
W	WATER
WAS	WASTE ACTIVATED SLUDGE
W/O	WITHOUT
WS	WATER SURFACE

100% ISSUED FOR BID

NO	BY	DATE	REVISIONS	DATE	APP.

Registered Professional Engineer (Civil) CERTIFICATE NO. 70097 Timothy B. Pierce Signed ARIZONA, U.S.A. Expires 12/31/28

THESE DRAWINGS ARE THE PROPERTY OF P.A.C.E. AND SHALL NOT BE REPRODUCED IN ANY MANNER NOR BE USED FOR CONSTRUCTION UNLESS STAMPED 'ISSUED FOR CONSTRUCTION'.

PREPARED BY: PACE
DESIGNED BY: NE
DRAWN BY: DS, WW
CHECKED BY: TP
SCALE: AS NOTED
DATE: NOV 2025
JOB NO.: B614

TITLE: SHEET INDEX

JOB: TOWN OF JEROME WASTEWATER TREATMENT PLANT — YAVAPAI CO. AZ

PREPARED BY: TAYLOR B. PIERCE R.C.E 70097 DATE
PACE Advanced Water Engineering
8723 E. Via de Ventura Suite A-144 Scottsdale, CA 85258
P: (480) 991-3395 | www.pacewater.com

SHEET G1.1
2 OF 99 SHEETS

JOB NO. B614

W:\B614\Engineering\B614-30\sheets\B614 - G1.0 TITLE SHEET.dwg - Tab: G1.1 - by reddington on 04/21/26 at 12:17:57 PM

GENERAL NOTES:

1. ALL PAVING, GRADING, PIPING, AND UTILITY LINE CONSTRUCTION WORK WITHIN THE PUBLIC RIGHT OF WAY, ON PRIVATE STREETS, ACCESS WAYS, LOT GRADING, MATERIALS, AND WORKMANSHIP SHALL COMPLY WITH TOWN OF JEROME ENGINEERING STANDARDS AND SPECIFICATIONS, AND SHALL CONFORM TO THE LATEST MARICOPA ASSOCIATION OF GOVERNMENTS (MAG) AND A.D.O.T. STANDARD DETAILS AND SPECIFICATIONS. GRADING WORK SHALL CONFORM TO MAG SPECIFICATIONS, THE SOILS REPORT, AND CHAPTER 70 ENTITLED "EXCAVATION AND GRADING" OF THE UNIFORM BUILDING CODE (UBC) LATEST EDITION, SUBSECTIONS 7001 TO 7005, 7009 TO 7013, FIGURES 70-1 AND 70-2 AND AS STATED THEREIN. LOCAL MUNICIPAL STANDARD DETAILS WILL CONTINUE TO APPLY WHERE NOT ADOPTED OR INCLUDED BY MAG. THE FOLLOWING NOTES AND SPECIFICATIONS ARE HEREBY MADE A PART OF THE CONTRACT DOCUMENTS AND PROJECT SPECIFICATIONS. WHERE THERE EXISTS A CONFLICT BETWEEN THESE NOTES, MAG SPECS, UBC, THE SOILS REPORT, OR THE PROJECT SPECIFICATIONS, THE MORE STRINGENT OF THE REQUIREMENTS SHALL GOVERN UNLESS PRIOR CLARIFICATION FROM THE ENGINEER HAS BEEN GIVEN IN WRITING TO THE CONTRACTOR. THE CONTRACTOR AS STATED HEREIN SHALL MEAN THE GENERAL CONTRACTOR AND HIS ASSOCIATED SUBCONTRACTORS. THE GENERAL CONTRACTOR IS RESPONSIBLE FOR THE COORDINATION AND PERFORMANCE OF THE WORK OF ALL HIS SUBCONTRACTORS AND SUPPLIERS.
2. ALL WORK SHALL BE BID AND INSTALLED BY THE CONTRACTOR COMPLETE AND OPERATIONAL TO LINES, GRADES, AND FUNCTIONS INDICATED ON ALL PLANS AND SPECIFICATIONS. THE CONTRACTOR SHALL PROVIDE ALL LABOR, MATERIALS, EQUIPMENT, AND SERVICES NECESSARY TO COMPLETE ALL PROJECT EARTHWORK AND SITE WORK INCLUDING BUT NOT LIMITED TO: SITE CLEARING, GRUBBING, DEMOLITION, DEBRIS REMOVALS FROM THE SITE, IMPORT AND/OR EXPORT OF SOILS AND OTHER MATERIALS TO AND FROM THE SITE, BORROW MATERIALS, TEMPORARY SOILS MATERIAL STOCKPILING, BACKFILL OF ONSITE BORROW PITS, MOVING OF MATERIALS, CUT AND FILL, SLOPES, SOILS AND BANK STABILIZATION AND PROTECTION, BERMING, ROADWAY EXCAVATIONS, RELOCATIONS, STRUCTURE EXCAVATIONS, TRENCHING, ALL BACKFILLING, SITE GRADING, PAVING, PIPING, UTILITY LINE AND STORM DRAINAGE CONSTRUCTION, CURBS, SITE CONCRETE WORK AND OTHER MISCELLANEOUS SITE WORK STRUCTURES AND ITEMS INDICATED ON THE PLANS AND IN THE CONTRACT DOCUMENTS.
3. ANY QUANTITIES SHOWN ON PLANS ARE NOT VERIFIED BY THE ENGINEER. QUANTITIES ARE APPROXIMATE ONLY AND INTENDED AS A GUIDE FOR ESTIMATING PURPOSES. THE CONTRACTOR IS RESPONSIBLE FOR PROVIDING HIS OWN QUANTITY TAKE OFFS. THE CONTRACTOR SHALL VISIT THE SITE AND REVIEW THE SOILS CONDITIONS AND THE SOILS REPORT WITH THE PROJECT SOILS ENGINEER PRIOR TO BIDDING THIS PROJECT. ANY DISCREPANCIES IN SITE MATERIALS SHALL BE BROUGHT TO THE ATTENTION OF THE DESIGN ENGINEER 7 DAYS MINIMUM PRIOR TO BIDDING FOR REVIEW. ALL SHRINK OF EARTH MATERIAL OR EXCESS MATERIAL FROM UTILITY TRENCHES AND FOUNDATIONS SHALL BE INCLUDED IN THE CONTRACTOR'S BID.
4. THE ENGINEER WILL NOT BE RESPONSIBLE FOR CONSTRUCTION MEANS, METHODS, TECHNIQUES, SEQUENCES, OR PROCEDURES OR FOR SAFETY PRECAUTIONS OR PROGRAMS UTILIZED IN CONNECTION WITH THE WORK, AND HE WILL NOT BE RESPONSIBLE FOR THE CONTRACTOR'S FAILURE TO CARRY OUT THE WORK IN ACCORDANCE WITH THE CONTRACT DOCUMENTS.
5. THE CONTRACTOR SHALL BE RESPONSIBLE FOR VERIFYING THE LIMITS OF THE WORK AREA FOR ALL PHASES OF THE WORK PRIOR TO BEGINNING CONSTRUCTION OF THOSE PHASES. ALL CONSTRUCTION LIMITS, AREAS OF WORK, SETBACKS, PERIMETERS, ADJACENT PROPERTY LINES, BOUNDARIES, AND OTHER CRITERIA DEFINING THE LIMITS OF THE CONTRACTOR'S WORK AREA AND LIMITS SHALL BE STAKED BY THE CONTRACTOR'S SURVEYOR PRIOR TO CONSTRUCTION OF CLEARING OF THE SITE. THE CONTRACTOR SHALL BE RESPONSIBLE FOR FAMILIARIZING HIMSELF WITH THE EXTENT OF WORK TO BE DONE IN EACH SEPARATE PHASE OF THE PROJECT, AND ANY WORK NECESSARY IN INACTIVE PHASES REQUIRED TO DEEM THE ACTIVE PHASES FINISHED, SAFE, AND SERVICEABLE.
6. THE DESIGN ENGINEER RESERVES THE RIGHT TO MAKE MINOR FIELD MODIFICATIONS TO GRADES AND STRUCTURE DESIGNS TO ACCOMMODATE FIELD CONDITIONS FOUND ON THE SITE. THIS INCLUDES BUT IS NOT LIMITED TO MINOR MODIFICATIONS TO GRADE, ALIGNMENT, SLOPE, OR STRUCTURE LOCATIONS. THE ENGINEER SHALL HAVE THE RIGHT TO MAKE SUCH CHANGES IN WRITING IN THE LOCATION AND QUANTITIES OF WORK AS MAY BE DEEMED ADVISABLE.
7. NO JOB WILL BE CONSIDERED COMPLETE UNTIL FINAL GRADING IS COMPLETE AND ALL CURBS, PAVEMENT, AND SIDEWALKS HAVE BEEN SWEPT CLEAN OF ALL DIRT AND DEBRIS, ALL SURVEY MONUMENTS ARE INSTALLED AND ALL VALVES, MANHOLES, AND BOXES HAVE BEN ADJUSTED ACCORDING TO THE PLANS AND STANDARD DETAILS.
8. SEE SPECIFICATION SECTION 01 11 00 SUMMARY OF WORK FOR DIVISION OF RESPONSIBILITY. SEE SPECIFICATION SECTION 00 70 00 CONDITIONS OF THE CONTRACT FOR DEFINITIONS.
9. ALL CONSTRUCTION SHALL BE IN ACCORDANCE WITH UNITED STATES ENVIRONMENTAL PROTECTION AGENCY STANDARDS AND POLICIES AND CURRENT SUPPLEMENTS THERETO.
10. ANY WORK PERFORMED WITHOUT THE APPROVAL OF THE ENGINEER AND/OR ALL WORK AND MATERIAL NOT IN CONFORMANCE WITH THE SPECIFICATIONS IS SUBJECT TO REMOVAL AND REPLACEMENT AT THE CONTRACTOR'S EXPENSE.
11. DEBRIS SHALL BE DISPOSED OF WITHIN APPROVED DISPOSAL FACILITIES.
12. THE CONTRACTOR SHALL PROVIDE ADEQUATE MEANS FOR CLEANING TRUCKS AND/OR OTHER EQUIPMENT OF MUD PRIOR TO ENTERING PUBLIC STREETS. IT IS THE CONTRACTOR'S RESPONSIBILITY TO CLEAN STREETS, ALLEY DUST, AND TAKE WHATEVER MEASURES ARE NECESSARY TO ENSURE THAT ALL ADJACENT ROADS ARE MAINTAINED IN A CLEAN, MUD AND DUST FREE CONDITION AT ALL TIMES.
13. CONTRACTOR SHALL TAKE MEASURES TO CONTROL DUST AND FUGITIVE EMISSIONS, INCLUDING BUT NOT LIMITED TO WATERING THE SITE TWICE DAILY DURING GRADING TO CONTROL DUST.
14. AN APPROVED SET OF PLANS SHALL BE ON THE JOB SITE AT ALL TIMES WORK IS IN PROGRESS. DEVIATION FROM THE PLANS WILL NOT BE ALLOWED WITHOUT AN APPROVED PLAN REVISION OR AUTHORIZATION FROM THE ENGINEER.
15. THESE DRAWINGS INDICATE THE GENERAL EXTENT OF THE REQUIRED WORK AND ARE NOT INTENDED TO INDICATE EVERY ELEMENT REQUIRED. THE CONTRACTOR SHALL FURNISH ALL ELEMENTS TO COMPLETE THE SCOPE OF WORK IN ACCORDANCE WITH THE CONTRACT DOCUMENTS. ALL ITEMS REQUIRING CLARIFICATIONS SHALL BE SUBMITTED AS A "REQUEST FOR INFORMATION" (RFI) TO THE ENGINEER PER SECTION 01 31 00 OF THE SPECIFICATIONS.
16. ALL CONSTRUCTION VEHICLES OR EQUIPMENT, MOBILE OR FIXED OPERATED, SHALL BE EQUIPPED WITH PROPERLY OPERATING AND MAINTAINED MUFFLERS IN ACCORDANCE WITH THE LOCAL NOISE ORDINANCES.
17. THE CONTRACTOR SHALL PROVIDE SHOP DRAWINGS FOR THE ENGINEER'S REVIEW, AS MAY BE NECESSARY FOR THE EXECUTION OF THE WORK AND AS REQUIRED BY THE DRAWINGS AND SPECIFICATIONS.
18. DUE TO THE ONGOING OPERATION OF THE FACILITY, CONTRACTOR SHALL PROVIDE A SEQUENCE OF CONSTRUCTION FOR TOWN AND ENGINEER'S APPROVAL. TWO WEEKS PRIOR TO THE START OF CONSTRUCTION THE SEQUENCE SHALL INCLUDE A DETAILED SCHEDULE OF EVENTS AND TIMEFRAME. ALL EQUIPMENT, PIPING, LABOR, ETC. FOR THE SEQUENCE SHALL BE THE RESPONSIBILITY OF THE CONTRACTOR. ALL TEMPORARY SHUTDOWNS AND CHANGES IN FACILITY OPERATION SHALL BE DISCLOSED TO OWNER AT LEAST 7 DAYS PRIOR.
19. PAVEMENT REPAIR, AS REQUIRED, MAY BE WITH COLD-MIX ASPHALT CONCRETE, WITH A MINIMUM THICKNESS OF 2 INCHES, USING AGGREGATE GRADING IN ACCORDANCE WITH MARSHALL MIX DESIGN OF SECTION 710 OF MAG UNIFORM STANDARD SPECIFICATIONS AND DETAILS FOR PUBLIC WORK CONSTRUCTION.
20. ALL CONSTRUCTION WORK SHALL BE PERFORMED IN ACCORDANCE WITH THE SOILS AND/OR GEOTECHNICAL REPORT PREPARED BY WESTERN TECHNOLOGIES, INC. DATED 10/25/2022. THIS REPORT IS SUPPLEMENTED BY 1) THESE PLANS AND SPECIFICATIONS, 2) YAVAPAI COUNTY PUBLIC WORKS STANDARDS AND SPECIFICATIONS, 3) STATE OF ARIZONA STANDARD DETAILS. IN THE EVENT OF CONFLICT, THE FORMER SHALL TAKE PRECEDENCE OVER THE LATTER. THE PERFORMANCE AND COMPLETION OF ALL WORK MUST BE TO THE SATISFACTION OF THE ENGINEER OF RECORD.

GENERAL CONSTRUCTION NOTES

ENGINEER'S NOTES

1. THE ENGINEER AND APPLICABLE AGENCY MUST APPROVE, PRIOR TO CONSTRUCTION, ANY ALTERATION TO OR VARIANCE FROM THESE PLANS. ANY VARIATION FROM THESE PLANS SHALL BE PROPOSED ON CONSTRUCTION FIELD PRINTS AND TRANSMITTED TO THE ENGINEER.
2. THE CONTRACTOR SHALL PROTECT AND MAINTAIN ALL EXISTING UTILITIES ON THE SITE. ANY DAMAGE TO EXISTING UTILITIES, WHETHER SHOWN OR NOT ON THE DRAWING SHALL BE REPAIRED/REPLACED AT THE CONTRACTOR'S EXPENSE. EXISTING SURFACE FEATURES AND FENCING SHALL BE REPLACED IN KIND.
3. ANY INSPECTION BY THE TOWN, COUNTY OR THE ENGINEER, SHALL NOT IN ANY WAY RELIEVE THE CONTRACTOR FROM ANY OBLIGATION TO PERFORM THE WORK IN STRICT COMPLIANCE WITH THE APPLICABLE CODES AND AGENCY REQUIREMENTS.
4. CONTRACTOR IS TO LOCATE ALL EXISTING PROPERTY MONUMENTS PRIOR TO CONSTRUCTION. NO EXISTING SURVEY MONUMENTATION SHALL BE REMOVED OR DISTURBED BY THE CONTRACTOR WITHOUT NOTIFICATION AND APPROVAL OF THE PROJECT SURVEYOR. THE CONTRACTOR SHALL CONTACT THE PROJECT SURVEYOR FOR THE SETTING OF REFERENCE POINTS 48 HOURS PRIOR TO DISTURBING OR REMOVING ANY MONUMENTS. A REGISTERED LAND SURVEYOR AT THE CONTRACTOR'S EXPENSE SHALL REPLACE ANY MONUMENTS DISTURBED DURING THE CONSTRUCTION OF THIS PROJECT.
5. NOTHING CONTAINED IN THE CONTRACT DOCUMENTS SHALL CREATE, NOR SHALL BE CONSTRUED TO CREATE, ANY CONTRACTUAL RELATIONSHIP BETWEEN THE ENGINEER AND THE CONTRACTOR OR ANY SUBCONTRACTOR.
6. ANY CONSTRUCTION WATER OBTAINED FROM THE TOWN WATER SOURCE WILL REQUIRE METER AND A BULK WATER PERMIT TO TRACK USAGE. THE TOWN WILL WAIVE FEES FOR PERMITTING AND USAGE IF USAGE IS LESS THEN 20,000 GALLONS. CONTACT THE TOWN OF JEROME AT (928) 634-7943 TO REQUEST A METER.
7. THE CONTRACTOR SHALL MAKE NO CLAIM AGAINST THE OWNER OR THE ENGINEER REGARDING ALLEGED INACCURACY OF CONSTRUCTION STAKES SET BY THE ENGINEER UNLESS ALL SURVEY STAKES SET BY THE ENGINEER ARE MAINTAINED INTACT AND CAN BE VERIFIED AS TO THEIR ORIGIN. IF, IN THE OPINION OF THE ENGINEER, THE STAKES ARE NOT MAINTAINED INTACT AND CANNOT BE VERIFIED AS TO THEIR ORIGIN, ANY REMEDIAL WORK REQUIRED TO CORRECT ANY ITEM OR IMPROPER CONSTRUCTION WORK IN THIS DEVELOPMENT SHALL BE PERFORMED AT THE SOLE EXPENSE OF THE RESPONSIBLE CONTRACTOR OR SUBCONTRACTOR.
8. TRAFFIC CONTROL SHALL BE MAINTAINED IN ACCORDANCE WITH THE TOWN OF JEROME MUNICIPAL CODES.
9. A PORTION OF THIS PROJECT SITE IS LOCATED WITHIN A DOCUMENTED 100-YR FEMA FLOODLAIN AS DESIGNATED ON THE PLANS.
10. IN CASES WHEN UNSTAKED EXISTING UTILITIES ARE ENCOUNTERED, SOME MINOR DEVIATION TO THE PROPOSED SEWER ALIGNMENT MAY BE ALLOWED TO MAINTAIN MINIMUM SEPARATION DISTANCES BETWEEN UTILITIES. ANY PROPOSED CHANGES TO THE ALIGNMENT MUST BE SUBMITTED TO THE TOWN'S REPRESENTATIVE FOR REVIEW. NO CHANGES WILL BE ALLOWED WITHOUT PROPER APPROVAL.
11. PRIOR TO BIDDING THE WORK, THE CONTRACTOR SHALL THOROUGHLY SATISFY HIMSELF AS TO THE ACTUAL CONDITIONS AND EARTHWORK QUANTITIES, IF ANY. NO CLAIM SHALL BE MADE AGAINST THE OWNER OR ENGINEER FOR ANY EXCESS OR DEFICIENCY THEREIN, ACTUAL OR RELATIVE.
12. THE ENGINEERS SHALL BE NOTIFIED BEFORE ANY ONSITE CONSTRUCTION BEGINS.
13. A SEPARATE PERMIT IS NECESSARY FOR ANY OFFSITE CONSTRUCTION.
14. APPROVAL OF THESE PLANS SHALL NOT PREVENT THE TOWN FROM REQUIRING CORRECTION OF ERRORS IN THE PLANS WHERE SUCH ERRORS ARE SUBSEQUENTLY FOUND TO BE IN VIOLATION OF ANY LAW OR ORDINANCE.

MECHANICAL CONSTRUCTION NOTES:

1. CONTRACTOR TO INSTALL PIPE SUPPORTS PER MANUFACTURER'S REQUIREMENTS AND SPECIFICATIONS. ALL DRY AREA PIPE SUPPORTS SHALL BE GALVANIZED STEEL U.N.O. ALL SUBMERGED PIPE SUPPORTS SHALL BE S.S. 316.
2. CONTRACTOR TO INSTALL PUMP BASE, GUIDE RAILS, AND BRACKETS PER MANUFACTURER'S REQUIREMENTS. CONTRACTOR SHALL CONFIRM SUPPLY OF PUMP MOUNTING EQUIPMENT WITH PUMP SUPPLIER.
3. ALL PROCESS PIPES SHALL BE COLOR COATED PER THE SPECIFICATIONS WITH THE EXCEPTION OF STAINLESS STEEL PIPES. ALL ABOVE GROUND PIPES SHALL ALSO BE OUTFITTED WITH A FLOW DIRECTION ARROW.
4. ALL ANCHORING/FASTENING SYSTEMS SHALL BE 316 S.S. REGARDLESS OF LOCATION, U.N.O.
5. CONTRACTOR SHALL SUBMIT SHOP DRAWINGS FOR REVIEW AND APPROVAL FOR EACH EQUIPMENT ITEM PRIOR TO INSTALLATION. INSTALLATION DETAILS FOR ALL EQUIPMENT ITEMS SHALL BE PER RESPECTIVE EQUIPMENT MANUFACTURER'S SHOP DRAWINGS AND RECOMMENDED INSTALLATION REQUIREMENTS.
6. ALL D.I.P. SHALL BE CLASS 350, UNLESS NOTED OTHERWISE.
7. ELEVATION OF EXISTING STRUCTURES, PIPING, AND COMPONENTS ARE APPROXIMATE. CONTRACTOR TO FIELD VERIFY PRIOR TO CONSTRUCTION.
8. PRECAST SUPPLIER TO PROVIDE STRUCTURAL CALCULATIONS STAMPED BY REGISTERED ENGINEER IN AZ TO DOCUMENT DESIGN OF PRECAST STRUCTURE.
9. GROOVE FITTINGS MAY BE USED IN LIEU OF FLANGE FITTINGS FOR ALL ABOVE GROUND D.I. PIPING.
10. CONTRACTOR SHALL BE RESPONSIBLE FOR ALL TEMPORARY PIPING AND EQUIPMENT NEEDED FOR PROCESS ISOLATION, BYPASS, AND TRANSITION.
11. ALL YARD PIPING SHALL BE SURVEYED FOR VERTICAL AND HORIZONTAL ALIGNMENT PRIOR TO BACKFILL.
12. ALL PIPE SUPPORTS SPACING SHALL MEET PIPING MANUFACTURER'S REQUIREMENTS.
13. STRUCTURAL DIMENSIONS CONTROLLED BY OR RELATED TO MECHANICAL OR ELECTRICAL EQUIPMENT SHALL BE VERIFIED BY THE CONTRACTOR AND REFLECTED ON SHOP DRAWING PRIOR TO CONSTRUCTION.
14. ALL PVC PIPE GREATER THAN 3" IN DIAMETER SHALL BE DIPS.
15. ALL EXPOSED PIPE SHALL INCLUDE HEAT TRACING AND INSULATION.
16. ALL NEW BURIED GRAVITY SEWER LINES AND FORCE MAINS SHALL BE INSTALLED WITH A MINIMUM 3' DEPTH OF EARTH COVER.

PERMITS

1. CONTRACTOR SHALL OBTAIN ALL PERMITS AT HIS OWN EXPENSE FROM LOCAL MUNICIPAL AND AIR POLLUTION CONTROL AUTHORITIES PRIOR TO BEGINNING CONSTRUCTION.
2. IT SHALL BE THE RESPONSIBILITY OF THE CONTRACTOR TO ARRANGE FOR THE RELOCATION AND RELOCATION COSTS, IF ANY, OF ALL UTILITIES, AND SUBMIT A UTILITY RELOCATION SCHEDULE TO THE MUNICIPALITY AND DESIGN ENGINEER PRIOR TO CONSTRUCTION. ALL PUBLIC UTILITY EQUIPMENT POLES, BOXES, STRUCTURES, AND MUNICIPAL UTILITY COMPANY EQUIPMENT SHALL BE RELOCATED BY THE APPROPRIATE UTILITY COMPANY OR MUNICIPALITY BEFORE ANY WORK IS STARTED.

RECORD DRAWINGS

1. ACCEPTANCE OF THE COMPLETED PAVING, GRADING, OR UTILITY INSTALLATION WILL NOT BE GIVEN UNTIL REPRODUCIBLE AS-BUILT PLANS HAVE BEEN SUBMITTED BY THE ENGINEER AND APPROVED BY THE LOCAL GOVERNING AGENCY.

OBSERVATION

1. THE CONTRACTOR SHALL CONTACT THE APPROPRIATE PUBLIC UTILITY COMPANIES FOR INSPECTION OF TRENCHING, BEDDING, AND BACKFILLING DONE IN CONJUNCTION WITH INSTALLATION OF THOSE UTILITIES ON THIS PROJECT.
2. SOILS COMPACTION TEST RESULTS MUST BE SUBMITTED TO THE ENGINEER'S OFFICE FOR ALL FILL MATERIAL FOR ROADS, TRENCH BACKFILL, AND SITE FILL MATERIALS UNDER SLABS AND STRUCTURES. NO FILL MATERIALS SHALL BE PLACED WITHOUT TESTING DURING PLACEMENT. CONTRACTOR SHALL SUBMIT ALL TEST RESULTS TO THE DESIGN ENGINEER AND GOVERNMENTAL AGENCIES.
3. CONTRACTOR SHALL SUBMIT A SCHEDULE, APPROVED IN WRITING BY A QUALIFIED CONSULTING TESTING AGENCY, FOR FREQUENCY, LOCATION, AND TYPE OF ALL PROJECT TESTING. THE CONTRACTOR WILL BE RESPONSIBLE FOR SCHEDULING AND COORDINATION OF ALL TESTING INCLUDING THE FOLLOWING TERMS WHICH SHALL BE TESTED IN ACCORDANCE WITH MAG SPECIFICATIONS:
   - 3.1. SUBGRADE COMPACTION
   - 3.2. BASE COURSE COMPACTION
   - 3.3. ASPHALT PAVEMENT MIX DESIGN QUALITY
   - 3.4. CONCRETE STRENGTH
   - 3.5. TRENCH BEDDING AND BACKFILL
   - 3.6. TESTING FOR UTILITIES, PIPING, AND DRAINAGE SYSTEMS

UTILITIES

1. A UTILITY COORDINATION MEETING SHALL BE COORDINATED BY THE CONTRACTOR PRIOR TO THE START OF ANY WORK. ALL UTILITY ISSUES SHALL BE ADDRESSED IN ACCODANCE WITH MAG 105.6.
2. LOCATION OF UNDERGROUND UTILITIES SHALL BE ACCOMPLISHED IN ACCORDANCE WITH ARS 40-360.22 PRIOR TO ANY EXCAVATION. BLUE STAKE SHALL BE CALLED AT 1-800-STAKE-IT FOR ACCURATE LOCATION OF UTILITIES AS NECESSARY AND PRIOR TO AN EXCAVATION. UTILITIES IF INDICATED ON PLANS ARE APPROXIMATE LOCATIONS ONLY, TAKEN FROM THE UTILITY COMPANY MAPS. IF THE CONTRACTOR ENCOUNTERS ANY LINES NOT INDICATED ON THE DRAWINGS OR MARKED IN THE FIELD BY THE UTILITY COMPANY THAT MAY INTERFERE WITH HIS WORK, HE SHALL NOTIFY THE APPROPRIATE UTILITY COMPANY IMMEDIATELY FOR DISPOSITION OF THOSE FACILITIES.
3. UTILITIES MUST BE LOCATED TO MINIMIZE INTERFERENCE WITH ONE ANOTHER, TO PROVIDE REQUIRED HORIZONTAL AND VERTICAL SEPARATIONS, AND TO PROVIDE MAINTENANCE ACCESS WITHOUT VIOLATING EASEMENT BOUNDARIES. SEPARATION BETWEEN UTILITIES PER MAG STANDARD.
4. ALL WATER MAINS, APPURTENANCES, AND INSTALLATIONS SHALL CONFORM TO A.W.W.A. STANDARDS AND ARIZONA DEPARTMENT OF ENVIRONMENTAL QUALITY AND TOWN OF JEROME REQUIREMENTS. WATER SYSTEMS SHALL BE TESTED PER A.D.E.Q. BULLETIN NO. 10 TO THE APPROPRIATE A.W.W.A. STANDARDS.

CONSTRUCTION STAKING

1. THE ACCURACY OF ALL CONSTRUCTION WORK SHALL BE MAINTAINED AND VERIFIED BY THE OWNER'S SURVEYOR AT THE OWNER'S EXPENSE BY PROVIDING CONSTRUCTION STAKING SUITABLE TO THE TOWN ENGINEER. STAKES WILL BE SET ESTABLISHING LINES AND GRADES (FINISH OR FLOWLINE) FOR ALL CONSTRUCTION INCLUDING ROADS, CURB AND GUTTER, SIDEWALKS, UTILITIES, STRUCTURES, AND OTHER WORK AS CONSIDERED NECESSARY BY THE ENGINEER. ALL SURVEY CONTROL SHALL BE SET BY THE OWNER'S SURVEYOR FROM MONUMENTS ACCEPTABLE TO THE ENGINEER.

GRADING AND EARTHWORK

1. NO GRADING OR TRENCHING WORK SHALL BEGIN PRIOR TO SUPPORTING AND PROTECTING EXISTING ONSITE AND ADJACENT PROPERTY FROM SETTLING, CRACKING, OR OTHER DAMAGE WHICH MIGHT RESULT. CONTRACTOR SHALL VERIFY FROM SOILS REPORT RECOMMENDATIONS THE DEGREE OF DIFFICULTY REQUIRED FOR TRENCHING AND EXCAVATION WORK BASED ON DEPTH AND TYPE OF MATERIALS TO BE ENCOUNTERED.
2. CLEARING AND GRUBBING: EXAMINE SITE AND PROVIDE NECESSARY EQUIPMENT AND LABOR TO REMOVE FROM THE SITE AND DISPOSE OF STUMPS, ROOTS, ROCKS, LOOSE FILL, VEGETATION DEBRIS, AND ANY OTHER OBJECTIONABLE MATERIALS FROM THE BUILDING AND MATERIAL. CLEAN. UNCLASSIFIED ONSITE SOILS MAY BE USED IN GENERAL AS FILL MATERIAL. SEE MAG SPECIFICATIONS 201 AND 215.
3. SUBGRADE PREPARATION: IF THE NATURAL SUBGRADE IS LESS THAN THE REQUIRED DENSITY, IT SHALL BE SCARIFIED AND COMPACTED TO A MINIMUM DEPTH OF TWELVE INCHES OR AS NOTED IN THE SOILS REPORT IMMEDIATELY PRIOR TO PLACING SUBSEQUENT FILL MATERIAL THEREON. THE CONTRACTOR IS RESPONSIBLE FOR MAINTENANCE AND REPAIR OF DAMAGE TO PREPARED SUBGRADE CAUSED BY CONTRACTOR'S OPERATIONS OR PUBLIC TRAFFIC UNTIL ACCEPTANCE OF PROJECT. NO MATERIALS SHALL BE PLACED UPON THE PREPARED SUBGRADE UNTIL IT MEETS THE SPECIFIED REQUIREMENTS. ROADWAY SUBGRADE COMPACTION INCLUDES SUBGRADE UNDER ALL PAVEMENT, CURB, SIDEWALKS, SHOULDERS, AND FILL SLOPES. SUBGRADE TOLERANCES SHALL BE AS SPECIFIED IN MAG SECTION 301. OPEN LANDSCAPED AREAS SHALL BE GRADED TO ±0.2 FEET.
4. IT IS THE RESPONSIBILITY OF THE CONTRACTOR TO CONTACT THE TESTING COMPANY FOR SCHEDULING OF COMPACTION TESTING. THE FREQUENCY OF DENSITY AND MOISTURE TESTS REQUIRED FOR ADEQUATE CONTROL SHALL BE THE RESPONSIBILITY OF THE SOILS ENGINEER WHO SHALL CERTIFY TO THE ENGINEER AND CONTRACTOR AT PROJECT END THAT THE ROADBED FILL IS COMPACTED AS OUTLINED HEREIN. COMPACTION SHALL BE ACHIEVED BY MECHANICAL MEANS. IN NO CASE SHALL STRUCTURE BACKFILLING BE FLOOD WATER SETTLED.
5. ALL SLOPE CONSTRUCTION AND ROADWAY EXCAVATION SHALL CONFORM TO THE REQUIREMENTS OF MAG SPECIFICATIONS SECTIONS 20, 205, 211, 301, AND UBC SECTIONS 7009 AND 8010. CUT AND FILL SLOPES SHALL BE AS INDICATED ON THE DETAILS AND PLANS. CUT AND FILL SLOPE GRADIENTS SHALL NOT EXCEED 2:1 IN STEEPNESS WITHOUT WRITTEN AUTHORIZATION FROM THE SOILS ENGINEER AND EXAMINATION BY THE DESIGN ENGINEER. ALL SLOPE CONDITIONS SHALL BE PROVIDED WITH THE APPROPRIATE BENCHES AS SPECIFIED IN THE REFERENCE DOCUMENTS AND INDICATED ON THE PLANS. IF SOILS CONDITIONS ARE ENCOUNTERED WHICH DO NOT ALLOW THE ESTABLISHMENT OF THE INDICATED CUT OR FILL SLOPES, THE DESIGN ENGINEER AND SOILS ENGINEER SHALL BE CONTACTED IMMEDIATELY TO DETERMINE AN ADJUSTMENT TO THE SLOPE GRADIENT OR TO ESTABLISH A METHOD OF STABILIZATION. ALL FILL SLOPES SHALL BE COMPACTED AS EACH LIFT OF FILL MATERIAL IS PLACED. ALL CUT AND FILL SLOPES SHALL BE UNIFORMLY GRADED TO LINES AND GRADES INDICATED. TOPS OF ALL CUT SLOPES SHALL BE ROUNDED AND ALL UNSTABLE AND LOOSE MATERIAL AT TOP OF SLOPE SHALL BE REMOVED. TOP OF CUT SLOPES OVER 10' HIGH SHALL BE PROVIDED WITH BRO DITCHES FOR DRAINAGE. ALL CUT AND FILL SLOPES SHALL BE REVEGETATED WITH A MIXTURE OF NATIVE GRASSES AND WILD FLOWER SEED OR AS SPECIFIED WITHIN THE LANDSCAPE PLANS. COMPACT ALL SHOULDERS AND BACKFILLS BEHIND ALL STRUCTURES AND WALLS.
6. COMPACT TO THE FOLLOWING SPECIFIED PERCENT OF MAXIMUM DENSITY AS DETERMINED IN ACCORDANCE WITH ASTM D698 AND MAG SECTION 211 OR AS DIRECTED IN THE SOILS REPORT.

MINIMUM PERCENT COMPACTION

SUBGRADE SOIL:

ROADWAY AND STRUCTURE AREAS - - - - - - - - - - - - - -95

PAVED AREAS (PAVEMENTS, SIDEWALKS, & PADS) - - 95

EARTH FILL:

ROADWAY AND STRUCTURE AREAS - - - - - - - - - - - - - -95

PAVED ARES (PAVEMENTS, SIDEWALKS, & PADS) - - - 95

GRASSED AND PLANTING AREAS - - - - - - - - - - - - - - - - 85

AGGREGATE BASE COURSE - - - - - - - - - - - - - - - - - - - 100

BACKFILL AROUND STRUCTURES - - - - - - - - - - - - - - - -95

BACKFILL FOR UTILITY TRENCHES (PER MAG SECTION 601). PROVIDE TYPE 1 BACKFILL OR AS DIRECTED BY APPROPRIATE UTILITY REQUIREMENTS. BACKFILL FOR TRENCHES WITHIN 10' OF STRUCTURES AND WALLS SHALL BE COMPACTED TO 95% UNLESS DIRECTED OTHERWISE BY ENGINEER.

100% ISSUED FOR BID

NO	BY	DATE	REVISIONS	DATE	APP.

Registered Professional Engineer (Civil) CERTIFICATE NO. 70097 TAYLOR B. PIERCE Date Signed ARIZONA, U.S.A. Expires 12/31/28

PREPARED BY: PACE
DESIGNED BY: NE
DRAWN BY: DS, WW
CHECKED BY: TP
SCALE: AS NOTED
DATE NOV 2025
JOB NO. B614

TITLE
GENERAL NOTES AND ABBREVIATIONS

JOB
TOWN OF JEROME
WASTEWATER TREATMENT PLANT
YAVAPAI CO. AZ

PREPARED BY:
PACE Advanced Water Engineering
8723 E. VIA de COMMERICO, SUITE A-204 | SCOTTSDALE, CA 85258
P: (408) 991-3595 | www.pacewater.com
TAYLOR B. PIERCE R.C.E 70097 DATE

SHEET
G2.0
3 OF 99 SHEETS
JOB NO. B614

THESE DRAWINGS ARE THE PROPERTY OF P.A.C.E. AND SHALL NOT BE REPRODUCED IN ANY MANNER NOR BE USED FOR CONSTRUCTION UNLESS STAMPED "ISSUED FOR CONSTRUCTION".

W:\B614\Engineering\B614-30\sheets\B614 - G2.0 GENERAL NOTES.dwg - Tab: G2.0 - by neddington on 11/18/25 at 3:11:17 PM

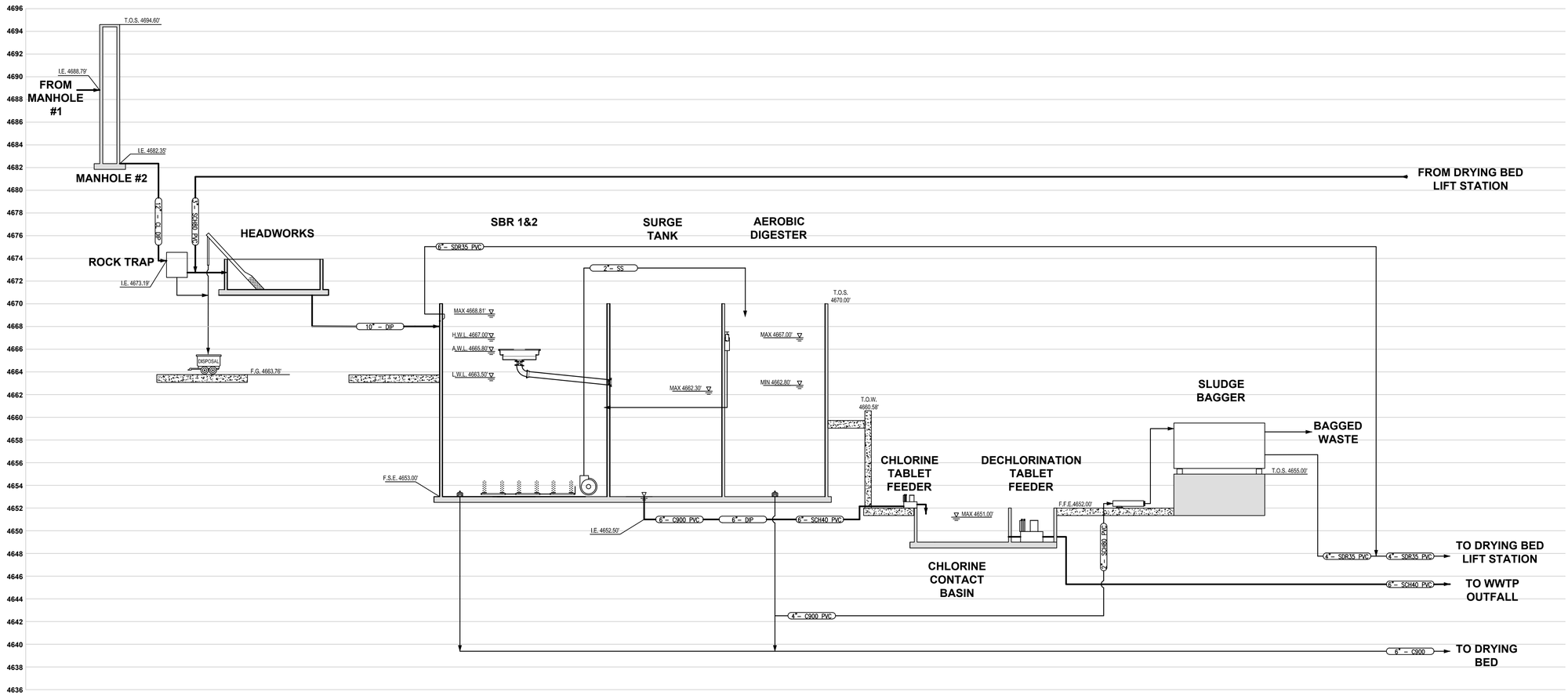

LEGEND

- PUMP
- ROTARY LOBE PUMP
- SLIDE/WEIR GATE
- TELESCOPING VALVE
- MUD VALVE
- PRIMARY FLOW
- SECONDARY FLOW

NO	BY	DATE	REVISIONS	DATE	APP.

Registered Professional Engineer (Civil) CERTIFICATE NO. 70097 TAYLOR B. PIERCE Signed ARIZONA, U.S.A. Expires 12/31/28

PREPARED BY: PACE
DESIGNED BY: NE
DRAWN BY: DS, WW
CHECKED BY: TP
SCALE: AS NOTED
DATE: NOV 2025
JOB NO.: B614

THESE DRAWINGS ARE THE PROPERTY OF P.A.C.E. AND SHALL NOT BE REPRODUCED IN ANY MANNER NOR BE USED FOR CONSTRUCTION UNLESS STAMPED "ISSUED FOR CONSTRUCTION".

TITLE: **HYDRAULIC PROFILE**

JOB: TOWN OF JEROME
WASTEWATER
TREATMENT PLANT
YAVAPAI CO. AZ

100% ISSUED FOR BID

PREPARED BY: TAYLOR B. PIERCE R.C.E 70097 DATE

PACE
Advanced Water Engineering
8723 E. Via de Commercio, Suite 214, Anaheim, CA 92808
P. (408) 991-3595 | www.pacewater.com

SHEET
G3.0
4 OF 99 SHEETS

JOB NO. B614

W:\B614\Engineering\B614-30\sheets\B614-G3.0 HYDRAULIC PROFILE.dwg - Tab: G3.0 - by reddington on 03/02/26 at 9:52:17 AM

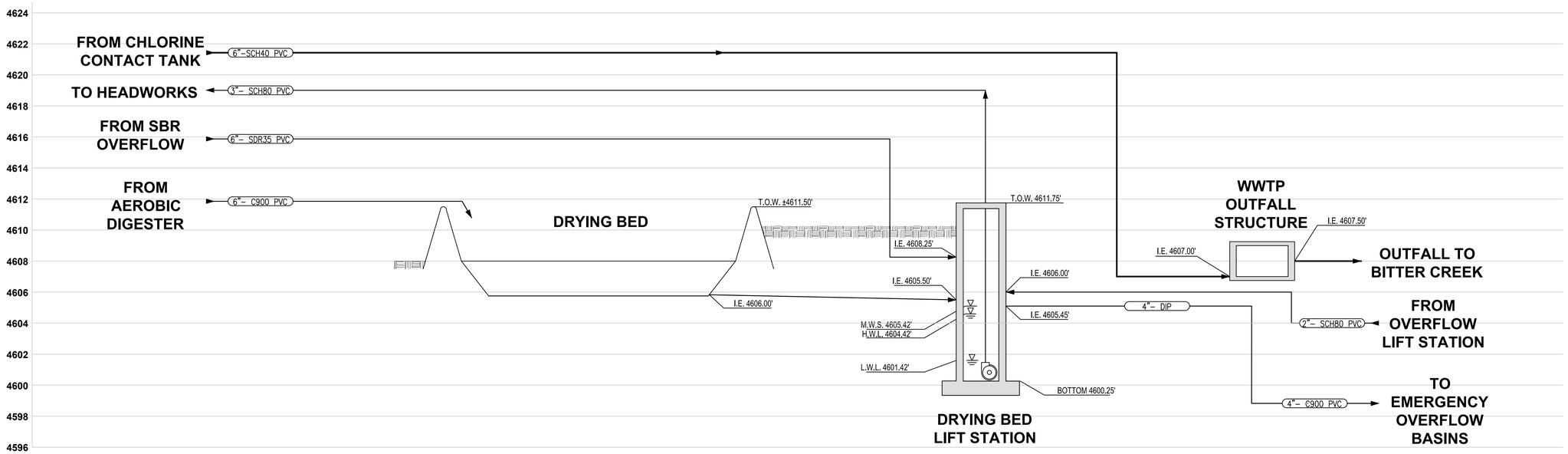

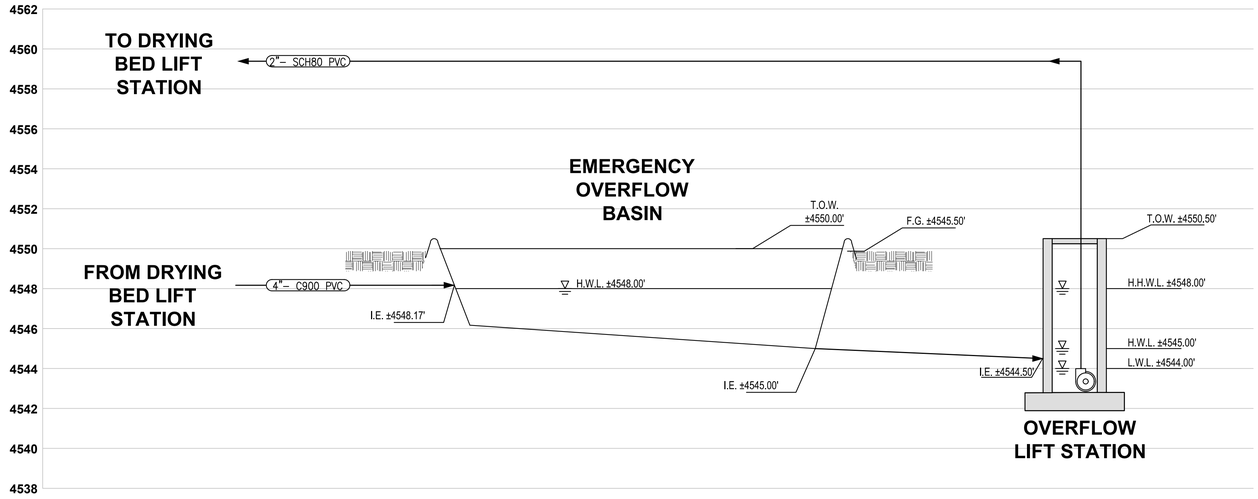

LEGEND

- PUMP
- ROTARY LOBE PUMP
- SLIDE/WEIR GATE
- TELESCOPING VALVE
- MUD VALVE
- PRIMARY FLOW
- SECONDARY FLOW

100% ISSUED FOR BID

HYDRAULIC PROFILE

TOWN OF JEROME
WASTEWATER
TREATMENT PLANT
YAVAPAI CO. AZ

JOB

PREPARED BY: PACE
DESIGNED BY: NE
DRAWN BY: DS, WW
CHECKED BY: TP
SCALE: AS NOTED
DATE: NOV 2025
JOB NO.: B614

Registered Professional Engineer (Civil)
CERTIFICATE NO. 70097
Timothy B. Pierce
Signed
ARIZONA, U.S.A.
Expires 12/31/28

NO	BY	DATE	REVISIONS	DATE	APP.

THESE DRAWINGS ARE THE PROPERTY OF P.A.C.E. AND SHALL NOT BE REPRODUCED IN ANY MANNER NOR BE USED FOR CONSTRUCTION UNLESS STAMPED 'ISSUED FOR CONSTRUCTION'.

PREPARED BY: PACE
Advanced Water Engineering
8723 E. VIA de COMMERCIO, BLDG. 4, SCOTTSDALE, CA 85258
P: (480) 991-3595 | www.pacewater.com
TAYLOR B. PIERCE R.C.E. 70097 DATE

SHEET
G3.1
5 OF 99 SHEETS

JOB NO. B614

W:\B614\Engineering\B614-3\Sheets\B614-G3.0-HYDRAULIC PROFILE.dwg - Tab: G3.1 - by roddington on 03/02/26 at 9:52:17 AM

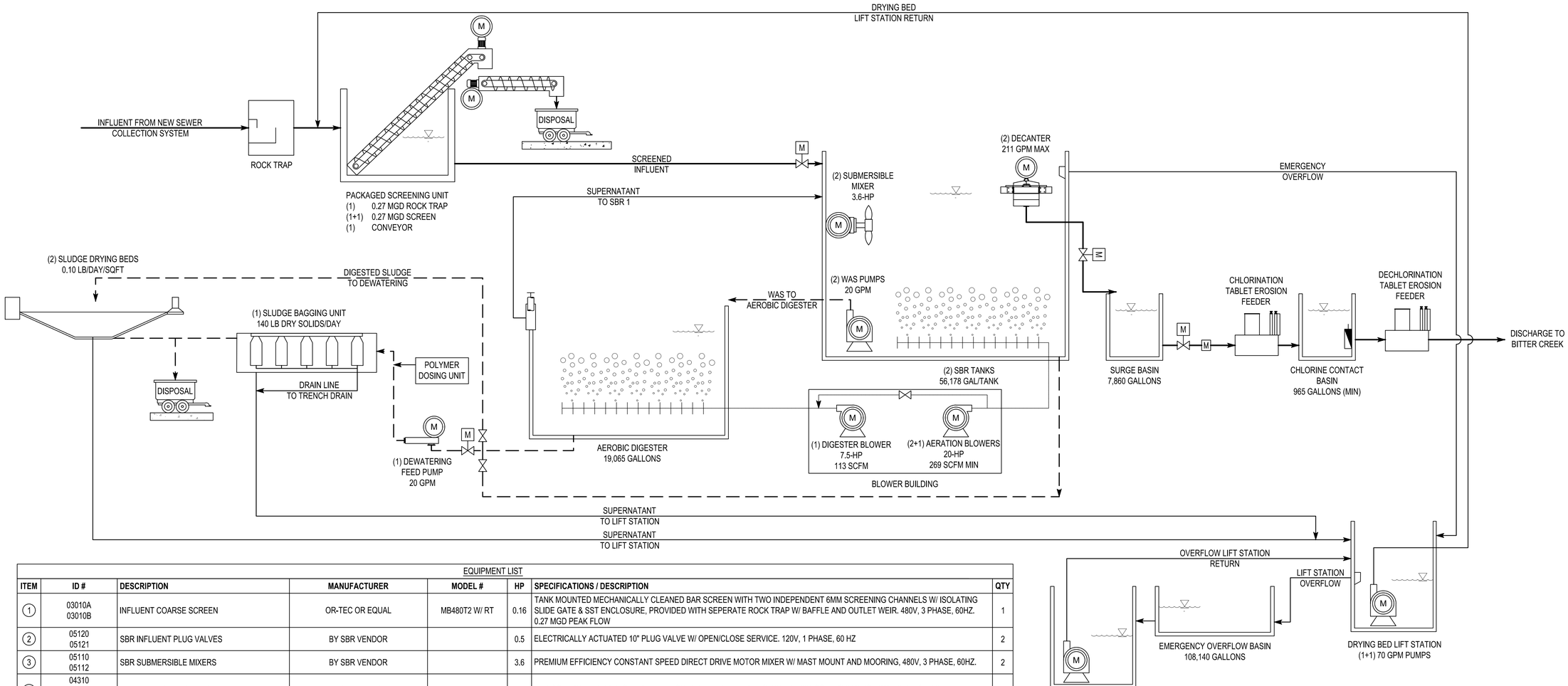

EQUIPMENT LIST

ITEM	ID #	DESCRIPTION	MANUFACTURER	MODEL #	HP	SPECIFICATIONS / DESCRIPTION	QTY
1	03010A 03010B	INFLUENT COARSE SCREEN	OR-TEC OR EQUAL	MB480T2 W/ RT	0.16	TANK MOUNTED MECHANICALLY CLEANED BAR SCREEN WITH TWO INDEPENDENT 6MM SCREENING CHANNELS W/ ISOLATING SLIDE GATE & SST ENCLOSURE, PROVIDED WITH SEPERATE ROCK TRAP W/ BAFFLE AND OUTLET WEIR. 480V, 3 PHASE, 60HZ. 0.27 MGD PEAK FLOW	1
2	05120 05121	SBR INFLUENT PLUG VALVES	BY SBR VENDOR		0.5	ELECTRICALLY ACTUATED 10" PLUG VALVE W/ OPEN/CLOSE SERVICE. 120V, 1 PHASE, 60 HZ	2
3	05110 05112	SBR SUBMERSIBLE MIXERS	BY SBR VENDOR		3.6	PREMIUM EFFICIENCY CONSTANT SPEED DIRECT DRIVE MOTOR MIXER W/ MAST MOUNT AND MOORING, 480V, 3 PHASE, 60HZ.	2
4	04310 04311 04312	SBR AERATION BLOWERS	BY SBR VENDOR		20	VFD CONTROLLED PD BLOWER UNIT W/ SOUND ATTENUATED ENCLOSURE, 361 SCFM @ 6.63 PSI, 480V, 3 PHASE, 60HZ.	3
5	04313	DIGESTER AERATION BLOWER	BY SBR VENDOR		7.5	VFD CONTROLLED PD BLOWER UNIT W/ SOUND ATTENUATED ENCLOSURE, 110 SCFM @ 6.63 PSI, 480V, 3 PHASE, 60HZ. CONTROLLED	1
6	04180 04181	RETREIVABLE FINE BUBBLE DIFFUSER SYSTEM	BY SBR VENDOR		N/A	RETRIEVABLE DIFFUSER RACK ASSEMBLY WITH MIN 30" EPDM TUBE DIFFUSERS, RANGE 1.0 CFM - 10.0 CFM (1 - 5 SCFM DESIGN) 2/ W EPDM FLEXIBLE DROP LINE AND QUICK DISCONNECT FITTINGS	60
7	04280	COARSE BUBBLE DIFFUSER SYSTEM	BY SBR VENDOR		N/A	3" EPDM DISK COARSE BUBBLE DIFFUSERS, RANGE 0.5 CFM - 5.0 CFM (0.5 - 2 SCFM DESIGN) 3/8" CXN	12
8	05100 05101	WAS TRANSFER PUMPS	BY SBR VENDOR		1.8	20 GPM @ 15' TDH SUBMERSIBLE NON-CLOG SLUDGE PUMP, 1.8 HP 480V, 3 PHASE, 60HZ W/ BASE AND SS GUIDE RAIL	2
9	05111 05113	SOLIDS EXCLUDING FLOATING DECANTER	BY SBR VENDOR		0.5	211 GPM FLOATING DECANTER W/ 120V, 1 PHASE, 60 HZ ACTUATED SUBMERGED WEIR, MOORING AND 6" DISCHARGE HOSE ASSEMBLY	2
10	05121 05123	SBR DECANT VALVE	BY SBR VENDOR		0.33	ELECTRICALLY ACTUATED 6" BUTTERFLY VALVE W/ MODULATING SERVICE, 480V, 3 PHASE, 60HZ	2
11	06221	TRANSFER/EFFLUENT VALVE	BY SBR VENDOR		0.33	ELECTRICALLY ACTUATED 6" BUTTERFLY VALVE W/ MODULATING SERVICE, 480V, 3 PHASE, 60HZ	1
12	06290	CHLORINATION EROSION TABLET FEEDER	NORWECO OR EQUAL	SERIES 4000	N/A	6" SCH 80 PVC HUB TABLET FEEDER W/ ADJUSTABLE INLET BAFFLE AND OUTLET WEIR AND 24" RISER ASSEMBLIES	1
13	05291	DECHLORINATION EROSION TABLET FEEDER	NORWECO OR EQUAL	SERIES 4000	N/A	6" SCH 80 PVC HUB TABLET FEEDER W/ ADJUSTABLE INLET BAFFLE AND OUTLET WEIR AND 24" RISER ASSEMBLIES	1
14	08400	DEWATERING FEED PUMP	BOERGER OR EQUAL	AN 40	3.0	20 GPM ROTARY LOBE SLUDGE PUMP, 3 HP 480V, 3 PHASE, 60HZ	1
15	08410	DRY POLYMER MAKE-DOWN AND FEED UNIT	PROMINENT OR EQUAL	ULTROMAT MT 140	0.25	POLYPROPOLENE PREP TANK W/ ELECTRIC STIRRER, WETTING CONE AND INJECTOR 480V, 3 PHASE, 60 HZ	1
16	08401	POLYMER METERING PUMP	PROMINENT OR EQUAL	DULCOFLEX - DFXa 0530	0.16	0.08 - 7.93 GPH SHELF-MOUNTED PERISTALTIC METERING PUMP, 73 PSI MAX BACK PRESSURE, 1/2" x 3/8" POLYURETHANE CONNECTOR TUBING, 115V, 1-PH SERVICE	1
17	08490	SLUDGE BAGGER SYSTEM	ENVIRODYNE, OR EQUAL	585-8i	N/A	20 GPM 8-BAG SLUDGE DEWATERING SYSTEM MAX LOADING RATE OF 20 GPM OR 100 #/HR - 25# ACTIVE POLYMER / TON DS	1
18	07400	DRYING BED DRAIN RETURN PUMPS	GRUNDFOS OR EQUAL	SEG.A15.40.EX.2.60H	4.16	70 GPM @ 90' TDH SUBMERSIBLE GRINDER PUMP, 5 HP 480V, 3 PHASE, 60HZ W/ BASE AND SS GUIDE RAIL	2
19	07401	PACKAGED OVERFLOW LIFT STATION	E ONE OR EQUAL	SP84S	2	31 GPM @ 82' TDH SDUPLEX GRINDER PRE-PACKAGED PUMP STATION, 2 HP 240V, 1 PHASE, 60 HZ W/ INTEGRAL FLOAT CONTROLS, PANEL AND SINGLE WARNING BEACON	1
20	SEE PID	PRESSURE TRANSDUCER	BY SBR VENDOR		N/A	304 SS SUBMERSIBLE PRESSURE TRANSDUCER WITH 4-20 mA SIGNAL OUTPUT	4
21	SEE PID	LEVEL SENSOR	BY SBR VENDOR		N/A	316 SS FLOAT SWITCH WITH THREE-CONDUCTOR ELECTRICAL CABLE	4
22	05160A 05161A	DISSOLVED OXYGEN CONTROLLER	BY SBR VENDOR		N/A	NEMA 4X ENCLOSURE WITH AC 100-230 VAC POWER SUPPLY, 4-20 mA SIGNAL OUTPUT	2
23	05160B 05161B	DISSOLVED OXYGEN PROBE	BY SBR VENDOR		N/A	304 SS PROBE	2
24	06240	EFFLUENT FLOW METER	BY SBR VENDOR		N/A	6" ELECTROMAGNETIC FLOW METER W/ TRAMSMITTER, ±1%ACCURACY 5D/3D, WITH 4-20 mA SIGNAL OUTPUT	1
25	01003	STANDBY GENERATOR			N/A	600 KW STANDBY GENERATOR W/ SOUND ATTENUATED OUTDOOR ENCLOSURE AND SUB BASE FUEL TANK	1

DESIGN FLOWS:

MAX MONTH AVE DAY FLOW:	90,000 GPD
MAX PEAK DAY FLOW:	135,000 GPD
PEAK HOUR FLOW:	270,000 GPD

INFLUENT PARAMETERS:

BOD:	360 MG/L
TSS:	250 MG/L
TKN:	40 MG/L

EFFLUENT PARAMETERS:

BOD:	<30 MG/L
TSS:	<30 MG/L
TN:	<10 MG/L
FECAL COLIFORM:	200 CFU/100 ML (4/7 SAMPLES); 800 CFU/100 ML (SINGLE SAMPLE MAX)

LEGEND

- FLOW METER
- PUMP
- BLOWER
- ROTARY LOBE PUMP
- ISOLATION VALVE/GATE
- MOTORIZED VALVE
- SLIDE/WEIR GATE
- TELESCOPING VALVE
- MIXER
- PRIMARY FLOW
- SECONDARY FLOW
- SLUDGE FLOW

100% ISSUED FOR BID

NO	BY	DATE	REVISIONS	DATE	APP.

Registered Professional Engineer (Civil) CERTIFICATE NO. 70097 Nathan E. Pace Signed ARIZONA, U.S.A. Expires 12/31/28

THESE DRAWINGS ARE THE PROPERTY OF P.A.C.E. AND SHALL NOT BE REPRODUCED IN ANY MANNER NOR BE USED FOR CONSTRUCTION UNLESS STAMPED "ISSUED FOR CONSTRUCTION".

PREPARED BY: PACE
DESIGNED BY: NE
DRAWN BY: DS, WW
CHECKED BY: TP
SCALE: AS NOTED
DATE: NOV 2025
JOB NO.: B614

TITLE: PROCESS FLOW DIAGRAM

JOB: TOWN OF JEROME WASTEWATER TREATMENT PLANT — YAVAPAI CO. AZ

PREPARED BY:
PACE
Advanced Water Engineering
8733 E. Via de Ventura, Suite F-110, SCOTTSDALE, CA 85258
P: (480) 991-3985 | www.pacewater.com
TAYLOR B. PIERCE R.C.E 70097 DATE

SHEET
G3.2
6 OF 99 SHEETS

JOB NO. B614

W:\B614\Engineering\B614-30\sheets\B614-G3.0 HYDRAULIC PROFILE.dwg - Tab: G3.2 - by neddigton on 03/02/26 at 9:32:17 AM

1 GENERAL

1.1 ALL PAVING, GRADING PIPING AND UTILITY LINE CONSTRUCTION WORK WITHIN THE PUBLIC RIGHT-OF-WAY, ON PRIVATE STREETS, ACCESS WAYS, LOT GRADING, MATERIALS, AND WORKMANSHIP SHALL COMPLY WITH TOWN OF JEROME ENGINEERING STANDARDS AND SPECIFICATIONS, AND SHALL CONFORM TO THE LATEST MARICOPA ASSOCIATION OF GOVERNMENTS (MAG) AND A.D.O.T. STANDARD DETAILS AND SPECIFICATIONS. GRADING WORK SHALL CONFORM TO MAG SPECS, THE SOILS REPORT* AND CHAPTER 70 ENTITLED "EXCAVATION AND GRADING" OF THE UNIFORM BUILDING CODE (UBC) LATEST EDITION, SUBSECTIONS 7001 TO 7005, 7009 TO 7013, FIGURES 70-1 AND 70-2 AND AS STATED THEREIN. LOCAL MUNICIPAL STANDARD DETAILS WILL CONTINUE TO APPLY WHERE NOT ADOPTED OR INCLUDED BY MAG. THE FOLLOWING NOTES AND SPECIFICATIONS ARE HEREBY MADE A PART OF THE CONTRACT DOCUMENTS AND PROJECT SPECIFICATIONS. WHERE THERE EXISTS A CONFLICT BETWEEN THESE NOTES, MAG SPECS, UBC, THE SOILS REPORT* OR THE PROJECT SPECIFICATIONS, THE MORE STRINGENT OF THE REQUIREMENTS SHALL GOVERN UNLESS PRIOR CLARIFICATION FROM THE ENGINEER HAS BEEN GIVEN IN WRITING TO THE CONTRACTOR. THE CONTRACTOR AS STATED HEREIN SHALL MEAN THE GENERAL CONTRACTOR AND HIS ASSOCIATED SUBCONTRACTORS. THE GENERAL CONTRACTOR IS RESPONSIBLE FOR THE COORDINATION AND PERFORMANCE OF THE WORK OF ALL OF HIS SUBCONTRACTORS AND SUPPLIERS.

1.2 ALL WORK SHALL BE BID AND INSTALLED BY THE CONTRACTOR COMPLETE AND OPERATIONAL TO LINES, GRADES AND FUNCTIONS INDICATED ON ALL PLANS AND SPECIFICATIONS. PROVIDE ALL LABOR, MATERIALS, EQUIPMENT AND SERVICES NECESSARY TO COMPLETE ALL PROJECT EARTHWORK AND SITE WORK INCLUDING BUT NOT LIMITED TO: SITE CLEARING, GRUBBING, DEMOLITION'S, DEBRIS REMOVALS FROM THE SITE, IMPORT AND/OR EXPORT OF SOILS AND OTHER MATERIALS TO AND FROM THE SITE, BORROW MATERIALS, TEMPORARY SOILS MATERIAL STOCKPILING, BACKFILL OF ONSITE BORROW PITS, MOVING OF MATERIALS, CUT AND FILL, SLOPES, SOILS AND BANK STABILIZATION AND PROTECTION, BERMING, ROADWAY EXCAVATIONS, RELOCATION'S, STRUCTURE EXCAVATIONS, TRENCHING, ALL BACKFILLING, SITE GRADING, PAVING, PIPING, UTILITY LINE AND STORM DRAINAGE CONSTRUCTION, CURBS, SITE CONCRETE WORK AND OTHER MISCELLANEOUS SITE WORK STRUCTURES AND ITEMS INDICATED ON THE PLANS AND IN THE CONTRACT DOCUMENTS.

1.4 ANY QUANTITIES SHOWN ON PLANS ARE NOT VERIFIED BY THE ENGINEER. QUANTITIES ARE APPROXIMATE ONLY AND INTENDED AS A GUIDE FOR ESTIMATING PURPOSES. THE CONTRACTOR IS RESPONSIBLE FOR PROVIDING HIS OWN QUANTITY TAKE OFFS. THE CONTRACTOR SHALL VISIT THE SITE AND REVIEW THE SOILS CONDITIONS AND THE SOILS REPORT* WITH THE PROJECT SOILS ENGINEER PRIOR TO BIDDING THIS PROJECT. ANY DISCREPANCIES IN SITE MATERIALS SHALL BE BROUGHT TO THE ATTENTION OF THE DESIGN ENGINEER 7 DAYS MINIMUM PRIOR TO BIDDING FOR REVIEW. ALL SHRINK OF EARTH MATERIAL OR EXCESS MATERIAL FROM UTILITY TRENCHES AND FOUNDATIONS SHALL BE INCLUDED IN THE CONTRACTOR'S BID.

1.5 THE ENGINEER MAY REQUIRE THE SUBMITTAL OF A "CERTIFICATE OF COMPLIANCE" AND/OR "MANUFACTURER'S GUIDELINES" FOR ANY MATERIALS USED IN THE WORK. MANUFACTURER'S GUIDELINES SHALL CONSISTS OF WRITTEN INSTRUCTIONS FOR SHIPPING, HANDLING, UNLOADING, CUTTING, JOINING, INSTALLATION, STORAGE, AND/OR ANY OTHER FACETS OF CONSTRUCTION

1.6 THE ENGINEER MAY REQUIRE ANY MATERIALS USED IN THE WORK TO BE TESTED ACCORDING TO AASHTO AND ASTM STANDARDS. THE CONTRACTOR SHALL, AT HIS EXPENSE, SUPPLY CERTIFICATES OR RESULTS OF TESTING.

1.7 ALL WORK AND MATERIALS NOT CONFORMING TO SPECIFICATIONS OR PERFORMED WITHOUT THE CONSENT OF THE OWNER OR HIS REPRESENTATIVE WILL BE SUBJECT TO REJECTION BY THE OWNER AND/OR ENGINEER AND REPLACED AT THE CONTRACTOR'S EXPENSE.

1.8 THE CONTRACTOR SHALL GUARD AGAINST DAMAGE DURING CONSTRUCTION TO ADJACENT PROPERTIES, FENCES, WALLS AND UTILITY EQUIPMENT. ANY ITEMS DAMAGED BY CONSTRUCTION SHALL BE REPLACED WITH SAME KIND OR BETTER AT CONTRACTOR'S EXPENSE.

1.9 NO CONSTRUCTION SHALL BEGIN UNTIL CONFLICTING UNDERGROUND UTILITY MITIGATING CONSTRUCTION IS COMPLETED, IF ANY, AND UNTIL PIPE SLEEVES AND SERVICE STUBS TO ALL BUILDINGS OR LOTS HAVE BEEN EXTENDED.

1.10 NO EXISTING SURVEY MONUMENTATION SHALL BE REMOVED OR DISTURBED BY THE CONTRACTOR WITHOUT NOTIFICATION AND APPROVAL OF THE PROJECT SURVEYOR. THE CONTRACTOR SHALL CONTACT THE PROJECT SURVEYOR FOR THE SETTING OF REFERENCE POINTS 48 HOURS PRIOR TO DISTURBING OR REMOVING ANY MONUMENTS. THE CONTRACTOR SHALL BE FINANCIALLY RESPONSIBLE FOR COSTS TO REESTABLISH MONUMENTATION OR CONTROLS REMOVED WITHOUT PRIOR NOTICE AND APPROVAL.

1.11 TRAFFIC CONTROL SHALL CONFORM TO THE LOCAL MUNICIPAL ADOPTED STANDARDS.

1.12 THESE PLANS ARE SUBJECT TO THE INTERPRETATION OF THE INTENT BY THE ENGINEER. ANY QUESTIONS REGARDING THESE PLANS MUST BE GIVEN TO THE ENGINEER AND YOU MUST HAVE RECEIVED A RESPONSE TO THE QUESTION. ANYONE WHO TAKES IT UPON THEMSELVES TO MAKE AN INTERPRETATION OF THE DRAWINGS OR MAKES REVISIONS TO THE SAME WITHOUT CONFERRING WITH THE DESIGN ENGINEER SHALL BE RESPONSIBLE FOR THE CONSEQUENCES THEREOF.

1.13 CONTRACTOR SHALL COORDINATE HIS WORK WITH THE DESIGN ENGINEER, OWNER, PUBLIC UTILITY COMPANIES AND OTHER ASSOCIATED TRADES ON AND ADJACENT TO THE PROJECT SITE. COORDINATE INSTALLATION OF ALL PUBLIC AND PRIVATE UNDERGROUND UTILITIES, PIPES, CONDUITS AND PIPE SLEEVE SIZES AND LOCATIONS PRIOR TO THEIR PLACEMENT. INSTALLATION: THE CONTRACTOR IS RESPONSIBLE FOR SETTING CAPPED SLEEVES AND PROVIDING TYPE 1 COMPACTION IN ALL BACKFILLED TRENCHES IN PAVED AREAS AND EASEMENTS. PROVIDE TRACER WIRE AND MARKER AT GRADE LEVEL FOR FUTURE LOCATING.

1.14 CONTRACTOR SHALL BE RESPONSIBLE FOR FINANCIAL REIMBURSEMENT TO THE OWNER AND ENGINEER FOR THE FOLLOWING ADDITIONAL ENGINEERING SERVICES SHOULD THEY OCCUR, AND SUCH A/E DESIGN SERVICES WILL BE DEDUCTED FROM CONTRACTOR'S FINAL PAYMENTS BY THE OWNER.

A. REINSPECTION, COORDINATION AND EXTRA TESTING OR RETESTING COSTS INCURRED BECAUSE OF IMPROPER OR FAULTY CONSTRUCTION. ONE TIME TESTING AND INSPECTION IS PROVIDED FOR BY THE OWNER. ALL OTHER TESTING IS THE CONTRACTOR'S RESPONSIBILITY.

B. ADDITIONAL STAKING NOT INCLUDED IN CONTRACT OR RESTAKING AS REQUESTED BY CONTRACTOR.

C. CHANGES AND SUBSTITUTIONS IN MATERIALS CONSTRUCTION METHODS, REQUESTED BY THE CONTRACTOR, THAT MUST BE REVIEWED, RECALCULATED OR APPROVED BY ENGINEER.

D. ENGINEERING DESIGN SERVICES REQUESTED BY THE CONTRACTOR OR CAUSED BY ERRORS OR OMISSIONS BY THE CONTRACTOR.

E. ANY ENGINEERING DESIGN APPROVED BY OTHERS AND SUBMITTED FOR REVIEW. THESE SHALL BEAR THE SEAL OF AN ENGINEER REGISTERED IN ARIZONA.

ANY DIFFERENCE BETWEEN PLANS AND SPECIFICATIONS AND QUESTIONS AS TO THEIR MEANING SHALL BE DETERMINED PRIOR TO AWARD OF THE CONTRACT AND SHALL BE INTERPRETED BY THE ENGINEER. THE GENERAL INTENT AND MEANING OF THE PLANS AND SPECIFICATIONS WILL GOVERN AND SHALL NOT WARRANT ANY ADDITIONAL COMPENSATION TO THE CONTRACTOR. THE ENGINEER WILL PROVIDE FULL INSTRUCTIONS WHEN DISCREPANCIES ARE DISCOVERED IN THE DOCUMENTS.

1.16 THE CONTRACTOR SHALL BE RESPONSIBLE FOR VERIFYING THE LIMITS OF THE WORK AREA FOR ALL PHASES OF THE WORK PRIOR TO BEGINNING CONSTRUCTION OF THOSE PHASES. ALL CONSTRUCTION LIMITS, AREAS OF WORK, SETBACKS, PERIMETERS, ADJACENT PROPERTY LINES, BOUNDARIES, AND OTHER CRITERIA DEFINING THE LIMITS OF THE CONTRACTOR'S WORK AREA AND LIMITS, SHALL BE STAKED BY THE CONTRACTOR'S SURVEYOR PRIOR TO CONSTRUCTION OR CLEARING OF THE SITE. THE CONTRACTOR SHALL BE RESPONSIBLE FOR FAMILIARIZING HIMSELF WITH THE EXTENT OF WORK TO BE DONE IN EACH SEPARATE PHASE OF THE PROJECT, AND ANY WORK NECESSARY IN INACTIVE PHASES REQUIRED TO DEEM THE ACTIVE PHASES FINISHED, SAFE, AND SERVICEABLE.

1.17 THE CONTRACTOR OR SUBCONTRACTORS SHALL NOT DEVIATE FROM THESE PLANS OR MAKE FIELD CHANGES WITHOUT REQUESTING THE ENGINEER TO PROVIDE, IN WRITING, THE APPROVAL OF THESE MODIFICATIONS. ANY CHANGES MADE WITHOUT APPROVAL OF THE DESIGN ENGINEER ARE SUBJECT TO REMOVAL AT THE EXPENSE OF THE CONTRACTOR.

1.18 THE DESIGN ENGINEER RESERVES THE RIGHT TO MAKE MINOR FIELD MODIFICATIONS TO GRADES AND STRUCTURE DESIGNS TO ACCOMMODATE FIELD CONDITIONS FOUND ON SITE. THIS INCLUDES BUT IS NOT LIMITED TO MINOR MODIFICATIONS TO GRADE, ALIGNMENT, SLOPE OR STRUCTURE LOCATIONS. THE ENGINEER SHALL HAVE THE RIGHT TO MAKE SUCH CHANGES IN WRITING IN THE LOCATION AND QUANTITIES OF WORK AS MAY BE DEEMED ADVISABLE.

1.19 NO JOB WILL BE CONSIDERED COMPLETE UNTIL FINE GRADING IS COMPLETE AND ALL CURBS, PAVEMENT AND SIDEWALKS HAVE BEEN SWEPT CLEAN OF ALL DIRT AND DEBRIS, ALL SURVEY MONUMENTS ARE INSTALLED AND ALL VALVES, MANHOLES AND BOXES HAVE BEEN ADJUSTED ACCORDING TO THE PLANS AND STANDARD DETAILS.

1.20 EXISTING GRADES INDICATED ON PLANS ARE BASED ON PREGRADING CONDITIONS. LOSSES IN MATERIAL DUE TO SHRINKAGE OF MATERIAL, DEMOLITION OF EXISTING SITE FEATURES, CLEARING AND GRUBBING OF THE SITE SHALL BE INCLUDED IN CONTRACTOR'S BID.

1.21 SHOP DRAWINGS SHALL BE PROVIDED BY THE CONTRACTOR PER MAG SECTION 105.2.

2 PERMITS

2.1 CONTRACTOR SHALL OBTAIN ALL PERMITS AT HIS OWN EXPENSE FROM LOCAL MUNICIPAL AND AIR POLLUTION CONTROL AUTHORITIES PRIOR TO BEGINNING CONSTRUCTION.

2.2 REQUIRED PERMITS SHALL BE SECURED BY THE CONTRACTOR FROM THE APPROPRIATE AGENCIES. A.D.O.T. REQUIRES THAT A PERMIT BE ISSUED FROM THEIR OFFICE FOR ANY WORK WITHIN STATE RIGHT-OF-WAY. FEDERAL PERMITS, UTILITY CO. AND OTHER PERMITS MAY BE REQUIRED. A.D.E.Q. REQUIRES PERMITS BE ISSUED PRIOR TO NEW CONSTRUCTION, EXTENSION TO, OR MODIFICATION OF WATER DISTRIBUTION SYSTEM, SEWAGE COLLECTION OR INDIVIDUAL SEWAGE TREATMENT SYSTEM. A RIGHT-OF-WAY PERMIT, ISSUED BY THE TOWN, IS REQUIRED FOR ANY EXCAVATION OR GRADING (INCLUDING PLACEMENT OF FILL). PRIOR TO CONSTRUCTION THE APPROPRIATE AGENCIES SHALL BE NOTIFIED BY THE CONTRACTOR AS REQUIRED BY THE PERMITS.

2.3 THE CONTRACTOR SHALL BE RESPONSIBLE FOR OBTAINING AT HIS OWN EXPENSE ALL APPROPRIATE INSURANCE FORMS FOR PERMIT REQUIREMENTS.

2.4 IT SHALL BE THE RESPONSIBILITY OF THE CONTRACTOR TO ARRANGE FOR THE RELOCATION AND RELOCATION COSTS, IF ANY, OF ALL UTILITIES, AND SUBMIT A UTILITY RELOCATION SCHEDULE TO THE MUNICIPALITY AND DESIGN ENGINEER PRIOR TO CONSTRUCTION. ALL PUBLIC UTILITY EQUIPMENT POLES, BOXES, STRUCTURES AND MUNICIPAL UTILITY COMPANY EQUIPMENT SHALL BE RELOCATED BY THE APPROPRIATE UTILITY COMPANY OR MUNICIPALITY BEFORE ANY WORK IS STARTED.

3 APPROVALS

3.1 THE CONTRACTOR IS TO USE ONLY THAT OFFICIAL CONSTRUCTION SET OF DRAWINGS WHICH CONTAINS THE APPROVAL OF THE GOVERNMENT AGENCY/UTILITY SIGNED ON THE COVER SHEET OF THE PLANS. THE CONTRACTOR SHALL NOT PLACE BIDS OR START CONSTRUCTION ON A SET OF DRAWINGS UNSIGNED BY THE GOVERNMENT AGENCY AND/OR MARKED "NOT FOR CONSTRUCTION".

4 RECORD DRAWINGS

4.1 IT IS THE RESPONSIBILITY OF THE CONTRACTOR TO PROVIDE AND KEEP AN UPDATED RECORD SET OF AS-BUILT INFORMATION DRAWINGS IN GOOD CONDITION ON THE JOB SITE AND PROVIDE THE DESIGN ENGINEER AT COMPLETION OF THE WORK, WITH THE RECORD SET SHOWING FIELD VERIFIED LOCATIONS OF ALL VALVES, BOXES, MANHOLES, UTILITY POLES, PIPE SLEEVES, UTILITY ENCASEMENT AND OTHER UTILITY LINES AND EQUIPMENT ABOVE AND BELOW GROUND WHICH THE CONTRACTOR ENCOUNTERS AND INSTALLS IN HIS AREA OF WORK.

4.2 ACCEPTANCE OF THE COMPLETED PAVING, GRADING OR UTILITY INSTALLATION WILL NOT BE GIVEN UNTIL REPRODUCIBLE AS-BUILT PLANS HAVE BEEN SUBMITTED BY THE ENGINEER AND APPROVED BY THE LOCAL GOVERNING AGENCY.

5 OBSERVATION

5.1 ALL MATERIALS USED AND ALL WORK DONE BY THE CONTRACTOR SHALL BE SUBJECT AT ALL TIMES TO THE INSPECTION, TESTING AND APPROVAL OF THE ENGINEER AND GOVERNING AGENCY. SPECIAL INSPECTION AND TESTING SERVICES SHALL BE PROVIDED AT THE OWNER'S EXPENSE, AS REQUIRED BY THE TOWN ENGINEER.

5.2 THE CONTRACTOR SHALL CONTACT THE APPROPRIATE PUBLIC UTILITY COMPANIES FOR INSPECTION OF TRENCHING, BEDDING AND BACKFILLING DONE IN CONJUNCTION WITH INSTALLATION OF THOSE UTILITIES ON THIS PROJECT.

5.3 SUBMITTAL OF AN ENGINEER'S CERTIFICATE OF COMPLETION IS REQUIRED BY A.D.E.Q. FOR ALL WATER AND SEWER SYSTEM CONSTRUCTION. RELATED INSPECTION AND TESTING SHALL BE PROVIDED BY THE OWNER'S ENGINEER AT THE OWNER'S EXPENSE.

5.4 SOILS COMPACTION TEST RESULTS MUST BE SUBMITTED TO THE ENGINEER'S OFFICE FOR ALL FILL MATERIAL FOR ROADS, TRENCH BACKFILL AND SITE FILL MATERIALS UNDER SLABS AND STRUCTURES. NO FILL MATERIALS SHALL BE PLACED WITHOUT TESTING DURING PLACEMENT. NO EARTH MATERIAL SHALL BE PLACED WITHOUT APPROVAL OF THE PREVIOUS LIFTS. THE CONTRACTOR SHALL SUBMIT ALL TEST RESULTS TO THE DESIGN ENGINEER AND GOVERNMENTAL AGENCIES.

5.5 CONTRACTOR SHALL SUBMIT A SCHEDULE, APPROVED IN WRITING BY A QUALIFIED CONSULTING TESTING AGENCY, FOR FREQUENCY, LOCATION AND TYPE OF ALL PROJECT TESTING. THE CONTRACTOR WILL BE RESPONSIBLE FOR SCHEDULING AND COORDINATION OF ALL TESTING INCLUDING THE FOLLOWING ITEMS WHICH SHALL BE TESTED IN ACCORDANCE WITH MAG SPECIFICATIONS...

1. SUBGRADE COMPACTION
2. BASE COURSE COMPACTION
3. ASPHALT PAVEMENT MIX DESIGN QUALITY
4. CONCRETE STRENGTH
5. TRENCH BEDDING AND BACKFILL
6. TESTING FOR UTILITIES, PIPING AND DRAINAGE SYSTEMS

5.6 THE TOWN SHALL BE NOTIFIED BY THE CONTRACTOR 24 HOURS PRIOR TO BEGINNING DIFFERENT PHASES OF CONSTRUCTION SO THAT CITY INSPECTIONS MAY BE SCHEDULED.

6 FINAL ACCEPTANCE

6.1 FINAL ACCEPTANCE OF THE CONSTRUCTION, BY THE TOWN ENGINEER, IS REQUIRED BEFORE RELEASING OF A PERMIT AND OR TRANSFERRING OWNERSHIP OF THE IMPROVEMENTS TO THE CITY.

6.2 APPROVAL OF A PORTION OF THE WORK IN PROGRESS DOES NOT GUARANTEE ITS FINAL ACCEPTANCE. TESTING AND EVALUATION MAY CONTINUE UNTIL WRITTEN FINAL ACCEPTANCE OF A COMPLETE WORKABLE UNIT. ACCEPTANCE OF COMPLETED IMPROVEMENTS WILL NOT BE GIVEN UNTIL DEFECTIVE OR UNAUTHORIZED WORK IS REMOVED, AND FINAL CLEANUP IS COMPLETE.

7 UTILITIES

7.1 A UTILITY COORDINATION MEETING SHALL BE COORDINATED BY THE CONTRACTOR PRIOR TO THE START OF ANY WORK. ALL UTILITY ISSUES SHALL BE ADDRESSED IN ACCORDANCE WITH MAG SECTION 105.6.

7.2 LOCATION OF UNDERGROUND UTILITIES SHALL BE ACCOMPLISHED IN ACCORDANCE WITH ARS 40-360.22 PRIOR TO ANY EXCAVATION. BLUE STAKE SHALL BE CALLED AT 1-800-STAKE-IT FOR ACCURATE LOCATION OF UTILITIES AS NECESSARY AND PRIOR TO ANY EXCAVATION. UTILITIES IF INDICATED ON PLANS ARE APPROXIMATE LOCATIONS ONLY, TAKEN FROM THE UTILITY COMPANY MAPS. IF THE CONTRACTOR ENCOUNTERS ANY LINES NOT INDICATED ON THE DRAWINGS OR MARKED IN THE FIELD BY THE UTILITY COMPANY THAT MAY INTERFERE WITH HIS WORK, HE SHALL NOTIFY THE APPROPRIATE UTILITY COMPANY IMMEDIATELY FOR DISPOSITION OF THOSE FACILITIES.

7.3 THE CONTRACTOR IS RESPONSIBLE FOR PREPARATION OF GRADE, TRENCHING, BACKFILLING, PAD CONSTRUCTION AND CONCRETE PADS FOR UTILITY EQUIPMENT INSTALLED ON THIS PROJECT. CONTRACTOR SHALL CONTACT LOCAL UTILITY COMPANIES FOR DETAILS AND REQUIREMENTS.

7.4 UTILITIES MUST BE LOCATED TO MINIMIZE INTERFERENCE WITH ONE ANOTHER, TO PROVIDE REQUIRED HORIZONTAL AND VERTICAL SEPARATIONS, AND TO PROVIDE MAINTENANCE ACCESS WITHOUT VIOLATING EASEMENT BOUNDARIES. SEPARATION BETWEEN UTILITIES PER MAG STANDARD

7.5 ALL UTILITY SLEEVES SHALL BE PLACED PRIOR TO SUBBASE CONSTRUCTION AND PAVING. CONTACT APPROPRIATE UTILITY COMPANIES FOR REQUIREMENTS IN ALL AREAS.

7.6 ALL WATER MAINS, APPURTENANCES, AND INSTALLATION SHALL CONFORM TO A.W.W.A. STANDARDS AND ARIZONA DEPARTMENT OF ENVIRONMENTAL QUALITY, AND TOWN OF JEROME REQUIREMENTS. WATER SYSTEM SHALL BE TESTED PER A.D.E.Q. BULLETIN NO. 10 TO THE APPROPRIATE A.W.W.A. STANDARDS.

7.7 ALL FIRE HYDRANTS SHALL MEET ALL REQUIREMENTS OF A.W.W.A. C-509-80 AND TOWN OF JEROME REQUIREMENTS.

8 CONSTRUCTION STAKING

8.1 THE ACCURACY OF ALL CONSTRUCTION WORK SHALL BE MAINTAINED AND VERIFIED BY THE OWNER'S SURVEYOR AT THE OWNER'S EXPENSE BY PROVIDING CONSTRUCTION STAKING SUITABLE TO THE TOWN ENGINEER. STAKES WILL BE SET ESTABLISHING LINES AND GRADES (FINISH OR FLOWLINE) FOR ALL CONSTRUCTION INCLUDING ROADS, CURB AND GUTTER, SIDEWALKS, UTILITIES, STRUCTURES, AND OTHER WORK AS CONSIDERED NECESSARY BY THE ENGINEER. ALL SURVEY CONTROL SHALL BE SET BY THE OWNER'S SURVEYOR FROM MONUMENTS ACCEPTABLE TO THE ENGINEER.

9 GRADING AND EARTHWORK

9.1 PERFORM ALL EARTHWORK GRADING, CUTTING AND FILLING AS PER THE PROJECT SOILS REPORT* AND ALL ADDENDA. ALL WORK TO BE COORDINATED AS PER THE SWPPP.

9.2 NO GRADING OR TRENCHING WORK SHALL BEGIN PRIOR TO SUPPORTING AND PROTECTING EXISTING ONSITE AND ADJACENT PROPERTY FROM SETTLING, CRACKING, OR OTHER DAMAGE WHICH MIGHT RESULT. CONTRACTOR SHALL VERIFY FROM SOILS REPORT RECOMMENDATIONS THE DEGREE OF DIFFICULTY REQUIRED FOR TRENCHING AND EXCAVATION WORK BASED ON DEPTH AND TYPES OF MATERIALS TO BE ENCOUNTERED.

9.3 WATER SOURCE: THE CONTRACTOR SHALL MAKE THE NECESSARY ARRANGEMENTS FOR OBTAINING ALL WATER REQUIRED FOR SOIL COMPACTION, DRINKING PURPOSES AND DUST CONTROL. (MAG SPEC 225)

9.4 CLEARING AND GRUBBING: EXAMINE SITE AND PROVIDE NECESSARY EQUIPMENT AND LABOR TO REMOVE FROM THE SITE AND DISPOSE OF STUMPS, ROOTS, ROCKS, LOOSE FILL, VEGETATION, DEBRIS, AND ANY OTHER OBJECTIONABLE MATERIALS FROM THE BUILDING AND FILL AREAS. CLEAN, UNCLASSIFIED ONSITE SOILS MAY BE USED IN GENERAL AS FILL MATERIAL. SEE MAG SPECIFICATION SECTIONS 201 AND 215.

9.5 TOPSOIL THAT WILL BE AFFECTED BY ROUGH GRADING OR EXCAVATION SHALL BE STOCKPILED ON THE SITE SEPARATELY AND SHALL NOT BE USED FOR FILL, BUT SHALL BE CONSERVED AND USED FOR FINE AND FINISH GRADING.

9.6 SITE DRAINAGE: CONSTRUCTION OF ALL SWALES, CHANNELS, DRAINAGE PIPES, DRAINAGE STRUCTURES AND BANK PROTECTION SHALL BE CONSTRUCTED DURING THE FIRST PHASES OF SITE CONSTRUCTION TO PROTECT ALL OTHER CONSTRUCTION FROM SURFACE WATERS. DIVERT RUN OFF WATER AROUND CONSTRUCTION OPERATIONS. CARE SHALL BE TAKEN BY THE CONTRACTOR NOT TO ADVERSELY AFFECT ADJACENT PROPERTIES. DRAIN EXCAVATIONS BY PUMPING OR OTHER SATISFACTORY METHOD TO PREVENT SOFTENING OF THE FOUNDATION SOILS, UNDERCUTTING OF FOOTINGS, OR OTHER ACTIONS DETRIMENTAL TO PROPER CONSTRUCTION PROCEDURES. ALL WORK TO BE COORDINATED AS PER THE SWPPP.

9.7 THE CONTRACTOR SHALL PROVIDE POSITIVE DRAINAGE AWAY FROM ALL WALLS AND FOUNDATIONS. ALL STORM DRAINS, DRAIN LINES, OVERFLOWS, OUTLETS, AND/OR OTHER DRAINAGE TYPE OUTLETS WHICH CONDUCT MOISTURE NEAR THE STRUCTURES SHALL BE POSITIVELY DRAINED AWAY FORM THE STRUCTURE. NO WATER SHALL BE PERMITTED TO POND NEAR STRUCTURES OR FOUNDATIONS. ALL DRAINAGE SHALL BE CHANNELED AND TAKEN A MINIMUM OF 10 FEET AWAY FROM ALL STRUCTURES.

9.8 SUBGRADE PREPARATION: IF THE NATURAL SUBGRADE IS LESS THAN THE REQUIRED DENSITY, IT SHALL BE SCARIFIED AND COMPACTED TO A MINIMUM DEPTH OF TWELVE INCHES OR AS NOTED IN THE SOILS REPORT IMMEDIATELY PRIOR TO PLACING SUBSEQUENT FILL MATERIAL THEREON. THE CONTRACTOR IS RESPONSIBLE FOR MAINTENANCE AND REPAIR OF DAMAGE TO PREPARED SUBGRADE CAUSED BY CONTRACTORS OPERATIONS OR PUBLIC TRAFFIC UNTIL ACCEPTANCE OF PROJECT. NO MATERIALS SHALL BE PLACED UPON THE PREPARED SUBGRADE UNTIL IT MEETS THE SPECIFIED REQUIREMENTS. ROADWAY SUBGRADE COMPACTION INCLUDES SUBGRADE UNDER ALL PAVEMENT, CURB, SIDEWALKS, SHOULDERS AND FILL SLOPES. SUBGRADE TOLERANCES SHALL BE AS SPECIFIED IN MAG SECTION 301. OPEN LANDSCAPED AREAS SHALL BE GRADED TO +/- 0.20 FEET.

9.9 EARTH FILL: AREAS TO BE FILLED SHALL BE LEVELED TO PROVIDE A LEVEL BASE TO SUPPORT FILL MATERIALS. SUBGRADE AND SUBBASE AREAS REQUIRING FILL MATERIAL SHALL BE SCARIFIED MOISTENED AND COMPACTED PRIOR TO PLACING FILL. ALL FILL, SUBGRADE AND SUBBASE MATERIALS SHALL BE COMPACTED TO SPECIFIED DENSITIES AT OR NEAR OPTIMUM MOISTURE CONTENTS AS VERIFIED AND RECOMMENDED BY THE SOILS ENGINEER. PLACE FILL IN HORIZONTAL LIFTS NOT EXCEEDING EIGHT INCHES IN LOOSE THICKNESS BEFORE COMPACTION. SLOPED SURFACES SHALL BE PLOWED, STEPPED, AND BENCHED SO THAT THE FILL MATERIAL WILL BOND WITH THE EXISTING MATERIAL. BENCH AT THE TOE OF FILL SLOPES AND PERIODIC INTERVALS UP THE FILL SLOPES BENCHES.

9.10 IT IS THE RESPONSIBILITY OF THE CONTRACTOR TO CONTACT THE TESTING COMPANY FOR SCHEDULING OF COMPACTION TESTING. THE FREQUENCY OF DENSITY AND MOISTURE TESTS REQUIRED FOR ADEQUATE CONTROL SHALL BE THE RESPONSIBILITY OF THE SOILS ENGINEER WHO SHALL CERTIFY TO THE ENGINEER AND CONTRACTOR AT PROJECT END THAT THE ROADBED FILL IS COMPACTED AS OUTLINED HEREIN. COMPACTION SHALL BE ACHIEVED BY MECHANICAL MEANS. IN NO CASE SHALL STRUCTURE BACKFILLING BE FLOOD WATER SETTLED.

9.11 ALL SLOPE CONSTRUCTION AND ROADWAY EXCAVATION SHALL CONFORM TO THE REQUIREMENTS OF MAG SPECIFICATIONS SECTIONS 201, 205, 211, 301, AND UBC SECTIONS 7009 AND 8010. CUT AND FILL SLOPES SHALL BE AS INDICATED ON THE DETAILS AND PLANS. CUT AND FILL SLOPE GRADIENTS SHALL NOT EXCEED 2:1 IN STEEPNESS WITHOUT WRITTEN AUTHORIZATION FROM THE SOILS ENGINEER AND EXAMINATION BY THE DESIGN ENGINEER. ALL SLOPE CONDITIONS SHALL BE PROVIDED WITH THE APPROPRIATE BENCHES AS SPECIFIED IN THE REFERENCE DOCUMENTS AND INDICATED ON THE PLANS. IF SOILS CONDITIONS ARE ENCOUNTERED WHICH DO NOT ALLOW THE ESTABLISHMENT OF THE INDICATED CUT OR FILL SLOPES, THE DESIGN ENGINEER AND SOILS ENGINEER SHALL BE CONTACTED IMMEDIATELY TO DETERMINE AN ADJUSTMENT TO THE SLOPE GRADIENT OR TO ESTABLISH A METHOD OF STABILIZATION ALL FILL SLOPES SHALL BE COMPACTED AS EACH LIFT OF FILL MATERIAL IS PLACED. ALL CUT AND FILL SLOPES SHALL BE UNIFORMLY GRADED TO LINES AND GRADES INDICATED. TOPS OF ALL CUT SLOPES SHALL BE ROUNDED AND ALL UNSTABLE AND LOOSE MATERIAL AT TOP OF SLOPE SHALL BE REMOVED. TOP OF CUT SLOPES OVER 10' HIGH SHALL BE PROVIDED WITH BROW DITCHES FOR DRAINAGE. ALL CUT AND FILL SLOPES SHALL BE REVEGETATED WITH A MIXTURE OF NATIVE GRASSES AND WILD FLOWER SEED OR AS SPECIFIED WITHIN THE LANDSCAPE PLANS. COMPACT ALL SHOULDERS AND BACKFILLS BEHIND ALL STRUCTURE AND WALLS.

9.12 COMPACT TO THE FOLLOWING SPECIFIED PERCENT OF MAXIMUM DENSITY AS DETERMINED IN ACCORDANCE WITH ASTM D698 AND MAG SECTION 211 OR AS DIRECTED IN THE SOILS REPORT.

MINIMUM PERCENT COMPACTION
SUBGRADE SOIL:
ROADWAY AND STRUCTURE AREAS----------95
PAVED AREAS (PAVEMENTS, SIDEWALKS, & PADS)---------95
EARTH FILL:
ROADWAY AND STRUCTURE AREAS----------95
PAVED AREAS (PAVEMENTS, SIDEWALKS, & PADS)---------95
GRASSED AND PLANTING AREAS----------85
AGGREGATE BASE COURSE----------100
BACKFILL AROUND STRUCTURES----------95
BACKFILL FOR UTILITY TRENCHES (PER MAG SECTION 601). PROVIDE TYPE 1 BACKFILL OR AS DIRECTED BY APPROPRIATE UTILITY REQUIREMENTS. BACKFILL FOR TRENCHES WITHIN 10' OF STRUCTURES AND WALLS SHALL BE COMPACTED TO 95% UNLESS DIRECTED OTHERWISE BY ENGINEER.

9.13 EXCAVATION: EXCAVATE TO THE DIMENSIONS AND DEPTHS INDICATED ON THE DRAWINGS. FOUNDATIONS SHALL REST ON ENGINEERED COMPACTED FILL OR UNDISTURBED NATURAL SOILS AT GRADE ELEVATIONS INDICATED. IF SUITABLE SOIL IS NOT REACHED AT THE DEPTHS INDICATED, THE CONTRACTOR SHALL IMMEDIATELY NOTIFY THE SOILS ENGINEER AND ENGINEER. THE CONTRACTOR WILL BE DIRECTED, IN WRITING, TO EXCAVATE TO THE DEPTH OF SUITABLE SOIL. EXCAVATION FOR FOUNDATIONS WHICH ARE CARRIED BELOW THE DEPTHS INDICATED SHALL HAVE THE CONCRETE EXTENDED TO THE BOTTOM OF THE EXCAVATION AT THE CONTRACTOR'S EXPENSE. SEE MAG SPECIFICATION SECTION 206.

9.14 WATERING: CAREFULLY WATER EARTH FILL DURING PLACING BY MEANS OF A FINE SPRAY OR OTHER APPROVED METHOD, SO THAT EACH LAYER IS THOROUGHLY AND UNIFORMLY WETTED. MOISTURE CONTENT OF THE MATERIAL SHALL BE CAREFULLY CONTROLLED AT ALL TIMES AND CHECKED AT PROPER INTERVALS TO INSURE CORRECT MOISTURE FOR COMPACTION SPECIFIED. SEE MAG SECTION 225 AND SOILS REPORT.

10 PAVING

10.1 COMPLETE ASPHALTIC CONCRETE PAVEMENT INSTALLATION SHALL INCLUDE BUT NOT BE LIMITED TO THE FOLLOWING:
A. TACK COATING OF ALL SURFACES, UNDILUTED .02 TO .10 GAL/SY, DILUTED 1:1 MIXTURE, .05 TO .15 GAL/SY, OR AS DIRECTED.
B. SEAL COATING: SEAL COATING WITHIN THE RIGHT-OF-WAY SHALL BE A FOG SEAL COAT.
C. PAINT FOR PAVEMENT STRIPING AND MARKING SHALL CONFORM TO FEDERAL SPEC. NO. TTP-155E, "PAINT, TRAFFIC, HIGHWAY, WHITE AND YELLOW". COLORS FOR PAVEMENT MARKING AND STRIPING SHALL BE AS SPECIFIED BY THE TOWN ENGINEER.
D. TRAFFIC CONTROL DEVICES: SIGNS AND PAVEMENT MARKINGS SHALL CONFORM TO "MANUAL ON UNI

11 FIELD INSPECTION

11.1 THE CONTRACTOR SHALL CAREFULLY PRESERVE ALL STAKES, REFERENCE AND CONTROL POINTS, ETC. AGAINST DESTRUCTION AND SHALL PROMPTLY NOTIFY THE ENGINEER OF ANY STAKES WHICH HAVE BEEN DISTURBED.

11.2 OWNER'S REGISTERED SURVEYOR SHALL BE NOTIFIED TWO WORKING DAYS (48 HOURS) MINIMUM PRIOR TO FIELD STAKING SCHEDULING.

11.3 ANY QUESTIONS RAISED RELATIVE TO ACCURACY OF IMPROVEMENT INSTALLATION SHALL NOT BE RAISED SUBSEQUENT TO COMPLETION OF THE WORK UNLESS ALL SURVEY STAKES ARE MAINTAINED INTACT. SHOULD SUCH STAKES NOT BE PRESENT AND VERIFIED AS TO THEIR ORIGIN, NO CLAIM FOR ADDITIONAL COMPENSATION FOR CORRECTION SHALL BE PRESENTED TO ANY PARTY AND SUCH WORK SHALL BE CORRECTED BY THE CONTRACTOR AT HIS EXPENSE.

12 SUSPENSION OF WORK

12.1 THE ENGINEER OR HIS AUTHORIZED REPRESENTATIVE MAY SUSPEND THE WORK BY WRITTEN NOTICE WHEN, IN HIS JUDGMENT, PROGRESS IS UNSATISFACTORY, WORK BEING DONE IS UNAUTHORIZED OR DEFECTIVE, WEATHER CONDITIONS ARE UNSUITABLE, OR THERE IS DANGER TO THE PUBLIC HEALTH OR SAFETY.

13 WARRANTY

13.1 ANY DEFECTS WHICH APPEAR IN THE WORK WITHIN TWO YEARS FROM THE DATE OF ACCEPTANCE AND WHICH ARE DUE TO IMPROPER WORKMANSHIP OR INFERIOR MATERIALS SUPPLIED SHALL BE CORRECTED BY OR AT THE EXPENSE OF THE CONTRACTOR.

14 EROSION CONTROL NOTES

(SPECIFICATIONS FOR PERMANENT SEEDING)

14.1 SITE PREPARATION
- A. INSTALL NECESSARY SURFACE WATER CONTROL MEASURES PRIOR TO PLANTING PERMANENT SEEDING.
- B. GRADE TO PERMIT USE OF CONVENTIONAL EQUIPMENT FOR SEEDBED PREPARATION.
- C. PROVIDE ADEQUATE DRAINAGE WHERE INTERNAL WATER MOVEMENT, ESPECIALLY AT TOES OF SLOPES, MAY CAUSE SEEPS OR SLIPPAGE BEFORE SEEDING IS WELL ESTABLISHED.

14.2 SEEDBED PREPARATION A. AS PRACTICAL, PERFORM ALL CULTURAL OPERATIONS AT RIGHT ANGLES TO THE SLOPE. B. IMMEDIATELY BEFORE SEEDING, RAKE OR OTHERWISE LOOSEN PLANTING SURFACE TO PROVIDE A SMOOTH, FRIABLE SURFACE FREE OF EARTH CLODS, HUMPS AND DEPRESSIONS, AND DISPOSE OF LOOSE STONES HAVING A DIMENSION GREATER THAN ONE INCH AND DEBRIS BROUGHT TO THE SURFACE DURING CULTIVATION.

14.3 PLANTING A. APPLY SEED MIX AT THE RATE OF 11 POUNDS PER ACRE. SHALL CONTAIN THE FOLLOWING PROPORTION OF PURE LIVE SEED: SAND DROPSEED (SPOROBOLUS CRYPTANDRUS) 1 LB SIDEOATS GRAMA (BOUTELOUS CURTIPENDULA)5 LB CRESTED WHEATGRASS (AGROPYRON CRISTATUM) 5 LB B. APPLY SEED IN TWO DIRECTIONS AT RIGHT ANGLES TO EACH OTHER WITH HALF THE SPECIFIED APPLICATION RATE APPLIED IN EACH DIRECTION. C. IMMEDIATELY AFTER SEEDING, UNIFORMLY SPREAD SCREENED MANURE AT THE RATE OF ONE CUBIC YARD PER 1000 SQUARE FEET AND WATER UNTIL THE GROUND IS WET TO A MINIMUM DEPTH OF TWO INCHES. D. HYDRAULIC SEEDING USING 1500 POUNDS OF WOOD CELLULOSE FIBER PER ACRE MAY BE UTILIZED IN LIEU OF PLANTING.

14.4 MAINTENANCE A. PROTECT PLANTED AREAS FROM GRAZING, FIRE, TRAFFIC, AND WEED GROWTH. B. MAINTAIN PLANTED AREAS UNTIL A GOOD STAND OF GRASS IS ESTABLISHED. AREAS AS REQUIRED IF NO GROWTH IS PRESENT WITHIN 15 DAYS OF PLANTING.

15 TEMPORARY EROSION CONTROL

15.1 EROSION CONTROL BERMS AND ROCK CHECK DAMS
- A. PROVIDE EARTHEN BERMS AT TOES OF SLOPES REMAINING BARE BETWEEN CONSTRUCTION PHASES.
- B. PLACE TEMPORARY ROCK CHECK DAMS IN ROAD DITCHES AND CHANNELS IF RIP-RAP PROTECTION WILL NOT BE PROVIDED WITHIN 60 DAYS.

15.2 CONTRACTOR SHALL BE RESPONSIBLE FOR PROVIDING EROSION CONTROL MEASURES SUCH AS SAND BAGGING, TEMPORARY DE-SILTING BASIN CONSTRUCTION BERMS, VISQUEEN, ETC. TO PROTECT ADJOINING PROPERTIES FROM EROSION.

16 GENERAL CONSTRUCTION NOTES

16.1 ALL CORRUGATED METAL PIPE TO BE 14 GAUGE, UNLESS OTHERWISE APPROVED BY THE DESIGN ENGINEER.

16.2 ALL CORRIGATED METAL PIPE SHALL HAVE FLARED END SECTIONS, EXCEPT WHERE HEADWALLS ARE USED.

16.3 ALL DRAINAGE CULVERTS AND PIPES SHALL HAVE A MINIMUM COVER OF 24" OR AS SPECIFIED.

16.4 ADDITIONAL CARE SHALL BE TAKEN TO PROTECT ALL CMP DURING CONSTRUCTION.

16.5 RETAINING WALLS SHALL BEAR ONTO NATURAL BEDROCK, OR COMPACTED SOIL WHICH HAS A BEARING VALUE OF 3,000 P.S.F. VERIFICATION OF SAID BEARING VALUE TO BE PROVIDED BY THE SOILS ENGINEER.

16.6 RIPRAP MATERIAL SHALL BE AS SPECIFIED TO A DEPTH OF TWICE THE SIZE OF Dso UNDER LAYING A FILLER LAYER OF Dso =3/4" TO A DEPTH OF 10" OR GEOTEXTILES. THE GRADATION OF RIPRAP SHOULD FOLLOW A SMOOTH CURVE. THE RATIO TO THE LARGEST SIZE ROCK TO Dso SHOULD BE EQUAL TO OR LESS THAN 2 (Dso/Dso ~0.5). THE RIPRAP SHOULD BE HARD, DENSE, DURABLE AND RESISTANT TO WEATHER AND FRACTURE. ALL RIPRAP TO BE HAND PLACED IN AN INTERLOCKING POSITION. FILLER MATERIAL TO BE WELL GRADED GRAVEL AS SPECIFIED. MATERIAL FURNISHED FOR RIPRAP SHALL CONFORM TO MAG SPEC 220.2.

16.7 ALL CONCRETE AND REBAR PLACEMENT PER MAG SPEC 505.

16.8 CONCRETE TESTING PER MAG SPEC 725.

16.9 ALL CONCRETE TO BE CLASS B (2500PSI) IF NOT SPECIFIED.

16.10 MINIMUM COVER ON ALL REBAR TO BE MIN 1" UNLESS OTHERWISE SPECIFIED.

16.11 MINIMUM LAP AT REBAR SPLICES TO BE 1' UNLESS OTHERWISE SPECIFIED.

16.12 ALL MANHOLE FRAMES TO HAVE 12" ANCHORS SPACED A MINIMUM OF 12" RADIALLY AROUND FRAME.

16.13 CONCRETE FOR FOOTINGS AND PADS AHALL BE CLASS A (3000 PSI)

SURVEY

1. TOPOGRAPHIC SURVEY BY KENNEY AERIAL MAPPING, INC., PHOENIX, AZ, DATED NOVEMBER 2022 AND SUPPLEMENTED IN FEBRUARY 2023. ADDITIONAL TOPOGRAPHIC SURVEY DATA PERFORMED BY SEC, INC. COORDINATES ARE RELATIVE TO NAD 83, AZ STATE PLANE CENTRAL ZONE, INTERNATIONAL FEET. ELEVATIONS RELATIVE TO NAVD 83. SURVEY CONTROL ON SHEET C2.0.

TREE NOTES

1. ALL EXISTING TREES AND SHRUBS NOT AFFECTED BY BUILDING CONSTRUCTION OR ROAD DEVELOPMENT MUST BE FENCED WITH A CONSTRUCTION ENVELOPE FENCE TO PROTECT THEM DURING CONSTRUCTION

2. NO TREES TO BE PLACED OVER/ON SEWER LINE

ADEQ WATER AND SEWER SYSTEM NOTES

MANHOLES

ALL MANHOLES SHALL BE 4-FT. ID PRECAST CONCRETE WITH POURED-IN-PLACE CONCRETE BASE AND TRAFFIC BEARING RING AND COVER. ALL COVERS SHALL BE 2-FT. IN DIAMETER AND SHALL BE MARKED "SEWER". TEST MANHOLES FOR WATER TIGHTNESS (INFILTRATION) PER R 18-9-E301.4.01.D.3.F. WATER TIGHTNESS SHALL BE TESTED BY EITHER 1) FILLING THE MANHOLE WITH WATER AND ENSURING THAT THE DROP IN WATER LEVEL DOES NOT EXCEED 0.0034 OF THE TOTAL MANHOLE VOLUME PER HOUR, OR 2) AIR PRESSURE TESTING USING THE "STANDARD TEST METHOD FOR CONCRETE SEWER MANHOLES BY NEGATIVE AIR PRESSURE (VACUUM) TEST", ASTM C1244-02a1 (2002). TEST 100% OF ALL MANHOLES. MANHOLES SHALL CONFORM TO A.D.E.Q. AND M.A.G. SPECIFICATIONS. CONSTRUCTION SHALL CONFORM TO M.A.G. STD. DTLS. 420-1 AND 420-2.'

CONCRETE

CLASS A CONCRETE SHALL HAVE A MINIMUM 28 DAY COMPRESSIVE STRENGTH OF 2000 PSI.

PIPE

GRAVITY SEWER PIPE SHALL BE PVC, SDR-26 AND CONFORM TO ASTM D-1784 AND ASTM D-3034. SEALS SHALL CONFORM TO ASTM F-477. PIPE SHALL BE JOINED BY BELL AND SPIGOT TYPE JOINTS. FITTINGS SHALL CONFORM TO ASTM D-3212. GRAVITY SEWER PIPE SHALL BE TESTED FOR DEFLECTION AND LEAKAGE. SHORT TERM DEFLECTION TESTING SHALL BE PERFORMED AFTER COMPLETE BACKFILL BUT PRIOR TO INSTALLATION OF FINISH SURFACE MATERIAL. A SHORT TERM DEFLECTION IN EXCESS OF 5% SHALL BE CONSIDERED UNACCEPTABLE AND PIPE SHALL BE REPAIRED, OR REPLACED AND RETESTED. A MINIMUM OF 100% OF GRAVITY SEWER SHALL BE DEFLECTION TESTED. SEWER PIPE SHALL BE TESTED FOR LEAKAGE USING LOW PRESSURE AIR TESTING PER "STANDARD TEST METHOD FOR INSTALLATION ACCEPTANCE OF PLASTIC GRAVITY SEWER LINES USING LOW PRESSURE AIR", ASTM F 1417-92, REAPPROVED 1998. TEST 100% OF ALL SEWER LINES. TEST THE TOTAL LENGTH OF THE SEWER LINE FOR UNIFORM SLOPE BY LAMP LIGHTING, REMOTE CAMERA OR SIMILAR METHOD APPROVED BY ADEQ AND RECORD THE RESULTS.

DUCTILE IRON PIPE SHALL BE AWWA C-150, CLASS 350 AND SHALL BE TESTED FOR LEAKAGE PER AWWA STANDARD C-600.

A MINIMUM HORIZONTAL DISTANCE OF 6-FT SHALL BE MAINTAINED BETWEEN MAINS AND GRAVITY SEWERS.

MATERIAL

ALL MATERIALS & PRODUCTS THAT COME INTO CONTACT WITH DRINKING WATER OR DRINKING WATER TREATMENT CHEMICALS MUST COMPLY WITH AWWA STANDARDS & NSF STANDARD 61. ANY "OR EQUAL' SUBSTITUTION SHALL ALSO MEET NSF STANDARD 61.

ALL MATERIALS USED IN THE INSTALLATION OF WATER MAINS SHALL BE PURSUANT TO AAC R-18-4-119, & SHALL BE NSF APPROVED FOR POTABLE WATER.

DISINFECTION

WATER MAINS. SHALL BE DISINFECTED IN ACCORDANCE WITH ADEQ ENGINEERING BULLETIN NO.8 "DISINFECTION OF WATER SYSTEMS".

TESTING

ONE HUNDRED PERCENT (100%) OF PIPE LINES SHALL BE PRESSURE AND LEAK TESTED IN ACCORDANCE WITH AWWA C-600, SECTION 4 AND MAG SECTION 611. MINIMUM TEST PRESSURES SHALL BE 200 PSI PLUS ALLOWANCE FOR WATER HAMMER.

AFTER PRESSURE AND LEAK TESTING IS SHOWN TO BE SATISFACTORY, WATER LINES SHALL BE DISINFECTED BY CHLORINATION IN ACCORDANCE WITH AWWA C-601, MAG SECTION 610.15, AND ADEQ BULLETIN 8. ALL VALVES SHALL BE WORKED INTERMITTENTLY FOR A PERIOD OF 24 HOURS FOLLOWING CHLORINATION.

WATER SYSTEM THRUST BLOCKING AND/OR JOINT RESTRAINT

PIPE LINES SHALL BE PROVIDED WITH CONCRETE THRUST BLOCKS AT ALL CHANGES IN DIRECTION AND SIZE AND AT ALL TEES, VALVES, PLUGS, AND DEAD ENDS, PER MAG STANDARD DETAILS 301 AND 380 AND YAG STANDARD DETAIL 3-03. PIPE LINES MAY ALSO BE PROVIDED WITH RESTRAINED JOINTS AT ALL CHANGES IN DIRECTION AND SIZE AND AT ALL TEES, VALVES, PLUGS, AND DEAD ENDS, PER MAG STANDARD DETAILS 302 AND 303.

ADEQ WATER & SEWER NOTES (CONT.)

TRENCHING AND BACKFILLING

ROUGH GRADING SHALL BE COMPLETED PRIOR TO INSTALLATION OF UNDERGROUND UTILITIES.

TRENCH BOTTOM SHALL BE COMPACTED BY SUITABLE MEANS APPROVED BY THE ENGINEER PRIOR TO PLACEMENT OF BEDDING MATERIAL. BEDDING MATERIAL SHALL BE PLACED TO PROVIDE UNIFORM AND ADEQUATE LONGITUDINAL SUPPORT UNDER THE PIPE. THE CONTRACTOR SHALL ENSURE THAT A MINIMUM COMPACTED DEPTH OF 6" IS MAINTAINED UNDERNEATH THE PIPE. BELL HOLES SHOULD BE PROVIDED AT EACH JOINT TO PERMIT PROPER ASSEMBLY WHILE MAINTAINING UNIFORM SUPPORT.

BEDDING MATERIAL SHALL BE ROUNDED GRAVEL WITH A MAXIMUM PARTICLE SIZE OF 1 1/2" AND SHALL BE NON-PLASTIC. WHERE DEPTH OF COVER IS 2-FT. OR LESS, BACKFILL MATERIAL SHALL BE ROUNDED GRAVEL WITH A MAXIMUM PARTICLE SIZE OF 4" AND WITH NO MORE THAN 20% PASSING THE #200 SIEVE.

BACKFILL SHALL BE PLACED IN LAYERS OF NOT MORE THAN 8" LOOSE DEPTH AND COMPACTED TO ACHIEVE COMPACTION OF 95% OF THE MAXIMUM DENSITY AS DETERMINED BY AASHTO T-99 AND T-191 OR ASTM D-2922 AND D-3017. THE CONTRACTOR SHALL CONTRACT WITH AN INDEPENDENT TESTING LABORATORY TO PROVIDED COMPACTION TESTING. TESTS SHALL BE PROVIDED AT MINIMUM INTERVALS OF ONE TEST PER 50 CUBIC YARDS OF TRENCH BACKFILL. TEST RESULTS SHALL BE SUBMITTED DAILY TO THE ENGINEER.

TRENCHING, PIPELAYING, BACKFILLING, AND ALL OTHER CONSTRUCTION SHALL BE PERFORMED UNDER THE INSPECTION, COORDINATION, AND SUPERVISION OF A REGISTERED PROFESSIONAL CIVIL ENGINEER.

NO TRENCH SHALL BE FILLED WITH BEDDING MATERIAL OR BACKFILL UNTIL THE EXCAVATION AND PIPE LAYING, RESPECTIVELY, HAVE BEEN APPROVED BY THE OWNER OR HIS AUTHORIZED REPRESENTATIVE.

THE EXCAVATION METHOD EMPLOYED SHALL BE THE CONTRACTOR'S OPTION. MATERIAL SHALL NOT BE STOCKPILED TO A DEPTH OF MORE THAN 5 FEET ABOVE FINISHED GRADE WITHIN 25 FEET OF ANY EXCAVATION OR STRUCTURE. EXCAVATION SHALL EXTEND SUFFICIENT DISTANCE FROM WALLS AND FOOTINGS TO ALLOW PLACING AND REMOVAL OF FORMS, INSTALLATION OF SERVICES AND INSPECTION BY THE ENGINEER. WITHIN 12" OF FINISHED GRADE SHOWN ON THE DRAWINGS, AND FOR THE MANHOLES, FILL AND BACKFILL SHALL BE NATIVE MATERIAL, FEE FROM BROKEN CONCRETE, ORGANIC MATERIAL, OR OTHER DEBRIS WITH SUFFICIENT FINES TO FILL ALL VOIDS AND TO INSURE A UNIFORMLY COMPACTED MASS OF THE REQUIRED DENSITY AND HAVING A MAXIMUM SIZE OF 2 - ½ INCHES WITH 0 TO 20% MINUS #200. ALL FILL AND BACKFILL SHALL BE PLACED IN LAYERS OF NOT MORE THAN 8" LOOSE AND COMPACTED TO 95% OF MAXIMUM DENSITY, DETERMINED BY AASHTO TEST METHOD T-99, PRIOR TO PLACEMENT OF THE NEXT LAYER.

WATER AND SEWER SYSTEM DESIGN: MINIMUM DESIGN CRITERIA

WATER AND SEWER MAINS SHALL BE SEPARATED IN ORDER TO PROTECT PUBLIC WATER SYSTEMS FROM POSSIBLE CONTAMINATION. ALL DISTANCES ARE MEASURED PERPENDICULARLY FROM THE OUTSIDE OF THE SEWER MAIN TO THE OUTSIDE OF THE WATER MAIN. SEPARATION REQUIREMENTS ARE AS FOLLOWS:
1. A WATER MAIN SHALL NOT BE PLACED:
A. WITHIN SIX FEET, HORIZONTAL DISTANCE, AND BELOW TWO FEET, VERTICAL DISTANCE, ABOVE THE TOP OF A SEWER MAIN UNLESS EXTRA PROTECTION IS PROVIDED. EXTRA PROTECTION SHALL CONSIST OF CONSTRUCTING THE SEWER MAIN WITH MECHANICAL JOINT DUCTILE IRON PIPE OR WITH SLIP-JOINT DUCTILE IRON PIPE IF JOINT RESTRAINT IS PROVIDED. ALTERNATE EXTRA PROTECTION SHALL CONSIST OF ENCASING BOTH THE WATER AND SEWER MAINS IN AT LEAST SIX INCHES OF CONCRETE FOR AT LEAST TEN FEET BEYOND THE AREA COVERED BY THIS SUBPARAGRAPH.
B. WITHIN TWO FEET HORIZONTALLY AND TWO FEET BELOW THE SEWER MAIN.
2. NO WATER PIPE SHALL PASS THROUGH OR COME INTO CONTACT WITH ANY PART OF A SEWER MANHOLE. THE MINIMUM HORIZONTAL SEPARATION BETWEEN WATER MAINS AND MANHOLES SHALL BE SIX FEET, MEASURED FROM THE CENTER OF THE MANHOLE.
3. THE MINIMUM SEPARATION BETWEEN FORCE MAINS OR PRESSURE SEWERS AND WATER MAINS SHALL BE TWO FEET VERTICALLY AND SIX FEET HORIZONTALLY UNDER ALL CONDITIONS. WHERE A SEWER FORCE MAIN CROSSES ABOVE OR LESS THAN SIX FEET BELOW A WATER LINE, THE SEWER MAIN SHALL BE ENCASED IN AT LEAST SIX INCHES OF CONCRETE OR CONSTRUCTED USING MECHANICAL JOINT DUCTILE IRON PIPE FOR TEN FEET ON EITHER SIDE OF THE WATER MAIN.

TOPO FEATURES

- EXISTING SANITARY SEWER w/SIZE
- GUARDRAIL
- WASH
- RETAINING WALL
- DIRT ROAD
- PROPERTY LINE
- OVERHEAD POWER LINE w/POLE
- FENCE LINE
- UNKNOWN EXPOSED PIPE
- CULVERT
- MANHOLE
- AERIAL SURVEY PANEL PT
- SIGN
- POST
- GATE
- TREE OR BUSH

LEGEND
PROPOSED DEVELOPMENT

- CENTER LINE/BASE LINE
- RIP RAP
- FENCE
- GUARD RAIL
- SAFETY RAIL
- CULVERT
- DRAINAGE FLOWLINE
- RETAINING WALL
- SIGNS
- DRAINAGE FLOW DIRECTION

LEGEND
PROPOSED SANITARY SEWER

- PRESSURE SEWER MAIN
- GRAVITY SEWER MAIN
- SEWER MANHOLE
- SEWER CLEANOUT

LEGEND
PROPOSED WATER

- WATER MAIN
- WATER METER
- AIR RELEASE VALVE
- BLOW OFF VALVE
- GATE VALVE
- FIRE HYDRANT w/VALVE
- BACKFLOW PREVENTOR VALVE
- WELL
- IRRIGATION CONTROL VALVE
- PIPE END CAP

LEGEND
PROPOSED ELECTRIC/GAS/TV/TEL

- OVERHEAD POWER
- UNDERGROUND POWER
- GAS
- TELEPHONE
- COMMON UTILITIES (TV,TEL)
- TELEVISION
- UTILITY POLE
- TELEPHONE RISER
- CABLE T.V. RISER
- GAS METER
- ELECTRIC METER
- ELECTRIC TRANSFORMER
- GUY WIRE

ABBREVIATIONS

LF	LINEAR FEET
ADOT	ARIZONA DEPT. OF TRANSPORATION
ADEQ	ARIZONA DEPT. OF ENVIRONMENTAL QUALITY
MAG	MARICOPA ASSOCIATION OF GOVERNMENTS
MSD	MARICOPA ASSOCIATION OF GOVERNMENTS STANDARD DETAIL
MUTCD	MANUAL OF UNIFORM TRAFFIC CONTROL DEVICES
FF	FINISHED FLOOR ELEVATION
EG	EXISTING GRADE
FG	FINISHED GRADE
TW	FINISHED GRADE AT TOP BACK OF WALL
BW	FINISHED GRADE AT BOTTOM FACE OF WALL
INV	INVERT
FL	FLOW LINE
AB	AGGREGATE BASE COURSE
DG	DECOMPOSED GRANITE
ADA	AMERICANS WITH DISABILITIES ACT
ARV	AIR RELEASE VALVE
BOV	BLOW-OFF VALVE
PVI	POINT OF VERTICAL INTERSECTION
DIP	DUCTILE IRON PIPE
PVC	POLYVINYL CHLORIDE
FPVC	FUSIBLE POLYVINYL CHLORIDE
CMP	CORRUGATED METAL PIPE
HDPE	HIGH DENSITY POLYETHYLENE
EP OR EOP	EDGE OF PAVEMENT
SEC	SOUTHWESTERN ENVIRONMENTAL CONSULTANTS, INC
STA	STATION
TBD	TO BE DETERMINED
VC	VERTICAL CURVE
WWTP	WASTE WATER TREATMENT PLANT
NTS	NOT TO SCALE
SF	SQUARE FEET
EL OR ELEV	ELEVATION
GRD BRK	GRADE BREAK
CP	SURVEY CONTROL POINT
SW	SIDEWALK
CY	CUBIC YARDS

NO	BY	DATE	REVISIONS	DATE	APP.

Professional Engineer — CERTIFICATE NO. 49106 — KRISHAN GEVINDA GINIGE — 10/31/25 — REGISTERED — ARIZONA, U.S.A.

PREPARED BY:
DESIGNED BY:
DRAWN BY: MMW
CHECKED BY: KG
SCALE: AS SHOWN
DATE 10/31/25
JOB NO. 19-1101CE

TITLE: NOTES 2, LEGENDS, ABBREVIATIONS

JOB: JEROME WWTP — GRADING & UTILITIES PLANS — YAVAPAI COUNTY AZ

PREPARED BY:
SOUTHWESTERN ENVIRONMENTAL CONSULTANTS, INC
825 COVE PARKWAY
COTTONWOOD, AZ 86326
928-282-7787

SHEET
C1.1
8 OF 99 SHEETS

JOB NO. 19-1101CE

© 2025, SEC, Inc., All Rights Reserved. This document is protected under the United States Copyright Act. No part may be reproduced in any form or by any means or stored in a database or retrieval system, without the prior written permission of SEC, Inc. These plans/documents have been prepared using technical knowledge that would be applied by other qualified consultants who practice this same profession in the same area and at the same time. Efforts have been made to be as accurate as possible. However, plans/documents could contain unintentional technical inaccuracies, typographical errors or omissions. Users of these plans/documents should understand that it is highly probable that errors and omissions will occur in any plan/document preparation process.

S:\LAND PROJECTS 2004 ENGINEERING\19-1101CE JEROME WWTP\DWG\C3D\PLANS\NOTES_LEGENDS_DETAILS.DWG

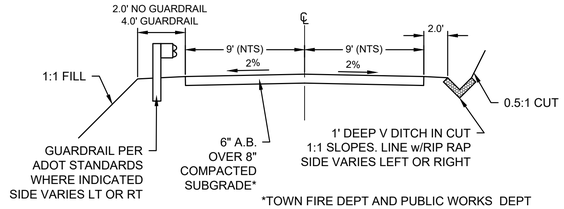

*TOWN FIRE DEPT AND PUBLIC WORKS DEPT
HAVE APPROVED USING AB ROAD SURFACE

1 TYPICAL WWTP ACCESS ROAD
1"=6'

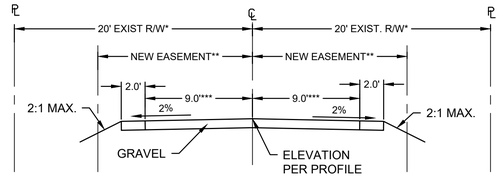

*NORTH DRIVE HAS 40' EXISTING RIGHT OF WAY
**NEW EASEMENT REQ'D. AT PRIVATE PROPERTY. WIDTH VARIES PER PLAN
***LANE WIDTH VARIES PER PLAN

2 TYPICAL NORTH DRIVE AND CEMETERY ACCESS RD
1"=6'

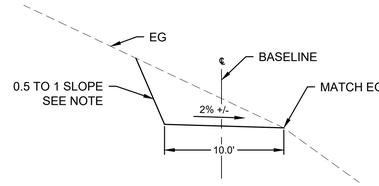

NOTE: 0.5 TO 1 SLOPE UPON APPROVAL BY
GEOTECHNICAL ENGINEER

3 TYPICAL SEWER ACCESS ROAD SECTION
1"=6'

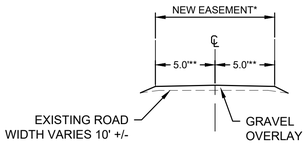

*NEW EASEMENT REQ'D. AT PRIVATE PROPERTY.
**PROVIDE MIN. 10' WIDE GRAVEL OVERLAY

4 TYPICAL CEMETERY RD THROUGH HISTORIC SITE
1"=6'

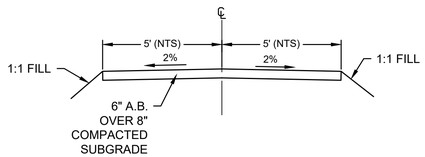

5 TYPICAL LOWER SITE ACCESS ROAD
1"=6'

NO	BY	DATE	REVISIONS	DATE	APP.

PREPARED BY:
DESIGNED BY:
DRAWN BY: NMW
CHECKED BY: KG
DATE 10/31/25
SCALE AS SHOWN
JOB NO. 19-1101CE

TITLE
TYPICAL SECTIONS

JOB
JEROME WWTP
GRADING & UTILITIES PLANS
YAVAPAI COUNTY AZ

PREPARED BY:
SEC Inc.
SOUTHWESTERN ENVIRONMENTAL CONSULTANTS, INC
825 COVE PARKWAY
COTTONWOOD, AZ 86326
928-282-7787

SHEET
C1.2
9 OF 99 SHEETS

JOB NO. 19-1101CE

© 2025, SEC, Inc., All Rights Reserved. This document is protected under the United States Copyright Act. No part may be reproduced in any form or by any means or stored in a database or retrieval system, without the prior written permission of SEC, Inc. possible. However, plans/documents could contain unintentional technical inaccuracies, typographical errors or omissions. Users of these plans/documents should understand that it is highly probable that errors and omissions will occur in any plan/document preparation process.

S:\land projects 2004 Engineering\19-1101CE Jerome WWTP\DWG\C3D\Plans\XBGRAD-19-1101CE.dwgS:\LAND PROJECTS 2004 ENGINEERING\19-1101CE JEROME WWTP\DWG\C3D\PLANS\XBGRAD-19-1101CE.DWG

100 YR FLOODWAY

500 YR FLOOD PLAIN

EXIST. PONDS

SHEET C2.1

NEW SEWER SEE SHEET C3.0

EXISTING BAR SCREEN

EXISTING TANKS

NEW WTTP

SHEET C2.6

EXISTING 12" SEWER FROM TOWN. SEE SHEET C3.0

MH-1

MH 2

12"SA

SA

P/L

X

BID ALTERNATE SEWER SEE SHEET C4.0

NEW SEWER CONSTRUCTION AND MAINTENANCE RD SEE SHEET C2.7

ROCK FALL PROTECTION BARRIER SEE SHEET C2.7

SHEET C2.5

SHEET C2.3

OPTIONAL WASTE EXCAVATION SITE 58,100 SF +/-

OPTIONAL TEMP. DUMP ROAD

EXISTING FENCE=END OF HISTORIC SITE

INSTALL NEW GATE AT EXISTING FENCE BEGIN IMPROVED ACCESS ROAD

APN 401-03-001L TOWN OF JEROME

CEMETARY

APN 401-03-043C JEROME VERDE DEVELOPMENT CO.

EXISTING ACCESS RD

½" REBAR LOT PIN MARKED RLS 26925
N: 1365826.06, E: 643587.50
ELEV=4801.17

4 C1.2

1 C1.2

IMPROVED ACCESS RD FOLLOWS EXISTING ROAD

PROPERTY BOUNDARY

NEW ACCESS EASEMENT REQ'D APN 401-03-043C

APPROX. CITY BOUNDARY

SHEET C2.4

PROJECT BENCH MARK
SET ½" REBAR
N: 1365466.36, E: 643466.42
ELEV 4827.11

RESTORE EXISTING CEMETERY ROAD TO MIN. 10' WIDE THROUGH HISTORIC SITE. SEE DETAIL 4, SHEET C1.2. SEE NOTE 3 THIS SHEET.

END NORTH DRIVE IMPROVEMENTS

APN 401-03-001C STUART

APN 401-11-001B DOSS

APN 401-11-001GU PATHWAY REAL ESTATE

APN 401-03-001N TOWN OF JEROME

EXISTING GRAVEL PARKING AREA

½" REBAR LOT PIN MARKED RLS 26925
N: 1365527.64, E: 643545.12
ELEV 4815.50

EXISTING CEMETARY GATE=BEGINNING OF HISTORIC SITE. SEE NOTE 3 THIS SHEET.

IMPROVED NORTH DRIVE. SEE DETAIL 2 SHEET C1.2

NEW ACCESS EASEMENT REQ'D 401-03-001P

NEW ACCESS EASEMENT REQ'D 401-11-007C

NEW ACCESS EASEMENT REQ'D 401-11-031A

EXISTING OVERHEAD POWER LINE AND 8' EASEMENT

JEROME APN 401-03-001P JEROME VERDE DEVELOPMENT CO.

APN 401-11-005A PATHWAY REALTY

APN 401-11-005B CANTO

APN 401-11-006 PETERSON

APN 401-11-007C LEACHMAN

HAMPSHIRE AVENUE / 89A

NORTH DRIVE

2 C1.2

APN 401-11-008 McWHIRTER & HUERTA

APN 401-11-031A CROSBY

SHEET C2.2

IMPROVE NORTH DRIVE INTERSECTION AT HWY 89A

EXISTING BLDG HAS BEEN REMOVED A NEW BLDG IS PENDING

NOTES

1. ACCESS ROAD IS DESIGNED TO ACCOMODATE AN AASHTO SU-30 TRUCK (APPROXIMATELY 30' LONG SINGLE UNIT TRUCK)
2. 2' CONTOURS SHOWN
3. THE CEMETARY IS A HISTORIC SITE. ANY WORK OR IMPROVEMENTS WITHIN THE HISTORIC SITE SHALL COMPLY WITH THE GOVERNING RESTRICTIONS. THE CONTRACTOR SHALL CONSULT WITH THE TOWN TO DETERMINE THE RESTRICTIONS.
4. NEW ACCESS EASEMENTS ARE NEEDED FOR ACCESS TO THE TREATMENT PLANT THROUGH THE PRIVATE PROPERTIES SHOWN. EASEMENTS ARE SHOWN FOR REFERENCE ONLY. FINAL DETAILS TO BE COORDINATED BY THE TOWN.

EARTHWORK ESTIMATE (CUBIC YARDS)*			
AREA	CUT	FILL	NET
NORTH DRIVE IMPROVEMENTS	101	94	7 CUT
WWTP ACCESS ROAD	4746	984	3762 CUT
WWTP PAD	993	897	96 CUT
LOWER WWTP SITE ACCESS RD	0	299	299 FILL
SEWER ACCESS RD	527	29	498 CUT
BROW DITCH	141	0	141 CUT
		TOTAL	4,266 CUT
*NO SHRINKAGE OR EXPANSION FACTORS APPLIED. EARTHWORK IS TO FINISHED GRADE. DEPTH TO SUBGRADE NOT ACCOUNTED FOR			

NORTH

0 20' 40' 80'

SCALE: 1"=40' @ 24"x36"

NO	BY	DATE	REVISIONS	DATE	APP.

Professional Engineer
CERTIFICATE NO.
49100
KRISHAN GEVINDA GINIGE
10/31/25
DATE SIGNED
ARIZONA, U.S.A.

PREPARED BY:
DESIGNED BY:
DRAWN BY: NMW
CHECKED BY: KG
SCALE: AS SHOWN
DATE: 10/31/25
JOB NO. 19-1101CE

TITLE
GRADING SITE MAP, SURVEY CONTROL

JOB
JEROME WWTP
GRADING & UTILITIES PLANS
YAVAPAI COUNTY AZ

PREPARED BY:
SEC Inc.
SOUTHWESTERN ENVIRONMENTAL CONSULTANTS, INC
825 COVE PARKWAY
COTTONWOOD, AZ 86326
928-282-7787

SHEET
C2.0
10 OF 99 SHEETS

JOB NO. 19-1101CE

© 2025, SEC, Inc., All Rights Reserved. This document is protected under the United States Copyright Act. No part may be reproduced in any form or by any means or stored in a database or retrieval system, without the prior written permission of SEC, Inc. These plans/documents have been prepared using technical knowledge that would be applied by other qualified registrants who practice the same profession in the same area and at the same time. Efforts have been made to be as accurate as possible. However, plans/documents could contain unintentional technical inaccuracies, typographical errors or omissions. Users of these plans/documents should understand that it is highly probable that errors and omissions will occur in any plan/document preparation process.

S:\land projects 2004 Engineering\19-1101CE Jerome WWTP\DWG\C3D\Plans\XBGRAD-19-1101CE.dwgS:\LAND PROJECTS 2004 ENGINEERING\19-1101CE JEROME WWTP\DWG\C3D\PLANS\XBGRAD-19-1101CE.DWG

CALLOUTS-WWTP	
1	NEW WASTEWATER TREATMENT PLANT
2	BLOWER / OPERATOR BLDG PER WWTP PLANS
3	CONCRETE DUMPSTER PAD & RAMP FOR DEWATERING PER STRUCTURAL PLANS.
4	CHLORINE CONTACT PER WWTP PLANS
5	EMERGENCY BACKUP GENERATOR PER WWTP PLANS
6	CATCH BASIN & DRAIN PIPE. SEE SHEET C2.6
7	PROVIDE STAIRS & HANDRAILS TO DUMPSTER PAD PER WWTP PLANS
8	TREATEMENT PLANT PAD. 6" AB OVER 8" COMPACTED SUBGRADE.
9	NOT USED.
10	BID ALTERNATE SEWER. SEE SHEET C4.0
11	PIPING PER WWTP PLANS
12	EXISTING 12" SEWER FROM TOWN. SEE SHEET C3.0
13	NEW 12" SEWER FROM TOWN. SEE SHEET C3.0
14	PROVIDE 5' WIDE PATH FOR SCREENINGS REMOVAL HAND CART
15	PLANT SCREENINGS REMOVAL PER WWTP PLANS
16	RETAINING WALL. FG ELEVATIONS PER PLAN. DETAILS PER STRUCTURAL PLANS. PROVIDE SAFETY RAILS FOR PEDESTRIAN FALL PROTECTION. SEE NOTE 4.
17	GRADE DEWATERING PAD TO DRAIN TO WALL OPENING OR SCUPPER. DETAILS TO BE COORDINATED BY STRUCTURAL ENGINEER.
18	BID ALTERNATE: INSTALL BOULDER CATCH FENCE. SEE SHEET C2.7.
19	1.5' DEEP BROW DITCH
20	EXISTING PVC WATER LINE. TO BE REMOVED OR RELOCATED PER TREATMENT PLANT PLANS. SEE NOTE 3.

NOTES
1. RETAINING WALL FINISHED GRADE ELEVATIONS SHOWN. TOP OF WALL AND FOOTING ELEVATIONS PER STRUCTURAL DETAILS. BY OTHERS.
2. 2' CONTOURS SHOWN
3. REFER TO TREATMENT PLANT PLANS, NOTES AND SPECIFICATIONS FOR ADDITIONAL CONSTRUCTION REQUIREMENTS AND DETAILS. BY OTHERS.
4. ALL RETAINING WALLS SHALL HAVE SAFETY RAILS PER MSD 145 OR OTHER SIMILAR MEANS FOR PEDESTRIAN FALL PROTECTION. TO BE COORDINATED BY STRUCTURAL ENGINEER.
5. ALL DITCHES, PONDS, DRAINAGE FLOW PATHS SHALL BE LINED WITH RIP RAP TO A HEIGHT OF MIN DEPTH. RIP RAP NOT SHOWN FOR CLARITY.
6. ALL RIP RAP D50=6" x 12" DEEP w/GEOTEXTILE FABRIC UNDERLAY UNLESS OTHERWISE SPECIFIED.
7. ALL SLOPES STEEPER THAN 2:1 SHALL HAVE EROSION PROTECTION PER GEOTECHNICAL ENGINEER RECOMMENDATIONS.

ESTIMATE OF EARTHWORK QTY'S SHOWN ON SEE SHEET C2.0

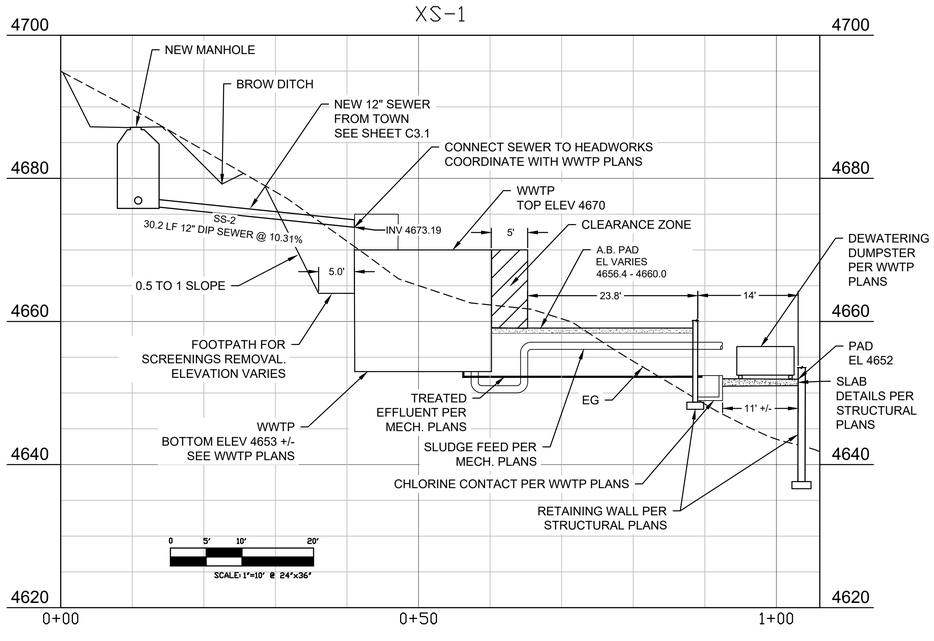

NO	BY	DATE	REVISIONS	DATE	APP.

Professional Engineer
CERTIFICATE NO.
49106
KRISHAN GEVINDA GINIGE
10/31/25
DATE SIGNED
ARIZONA, U.S.A.

PREPARED BY:
DESIGNED BY:
DRAWN BY: NMW
CHECKED BY: KG
SCALE: AS SHOWN
DATE 10/31/25
JOB NO. 19-1101CE

TITLE
WWTP SITE GRADING-10SC

JOB
JEROME WWTP
GRADING & UTILITIES PLANS
YAVAPAI COUNTY AZ

PREPARED BY:
SEC Inc.
SOUTHWESTERN ENVIRONMENTAL CONSULTANTS, INC
825 COVE PARKWAY
COTTONWOOD, AZ 86326
928-282-7787

SHEET
C2.1
11 OF 99 SHEETS

JOB NO. 19-1101CE

© 2025, SEC, Inc., All Rights Reserved. This document is protected under the United States Copyright Act. No part may be reproduced in any form or by any means or stored in a database or retrieval system, without the prior written permission of SEC, Inc. possible. However, plans/documents could contain unintentional technical inaccuracies, typographical errors or omissions. Users of these plans/documents should understand that it is highly probable that errors and omissions will occur in any plan/document preparation process.

S:\land projects 2004 Engineering\19-1101CE Jerome WWTP\DWG\C3D\Plans\XBGRAD-19-1101CE.dwgS:\LAND PROJECTS 2004 ENGINEERING\19-1101CE JEROME WWTP\DWG\C3D\PLANS\XBGRAD-19-1101CE.DWG

MATCH SHEET C2.0

CALLOUTS-NORTH DRIVE	
1	INSTALL NEW WIDENED ROAD PER DETAIL 2, SHEET C1.2
2	REMOVE EXISTING TREE AS NEEDED TO ACCOMODATE NEW RADIUS AT HWY 89A
3	SAWCUT & REMOVE 2' ASPHALT FOR NEW CONCRETE CONSTRUCTION. REPLACE PER ADOT SPECS.
4	PROVIDE CONCRETE APRON AT CONNECTION TO HWY 89A. 6" CONCRETE OVER 6" AB. PROVIDE SINGLE MAT #4 BARS AT 18" OC BW, CENTERED IN SLAB. PROVIDE EXPANSION & CONTRACTION JOINTS PER ADOT STD DWG C-05.20.
5	MATCH EXISTING DRIVEWAY OR SIDE ROAD

NOTES
1. 2' CONTOURS SHOWN
2. A PERMIT IS REQUIRED FOR ALL WORK WITHIN ADOT RIGHT OF WAY.
3. NEW ACCESS EASEMENTS ARE REQUIRED AT PRIVATE PROPERTIES AS SHOWN IN THESE PLANS. SHOWN FOR REFERENCE ONLY. FINAL DETAILS TO BE COORDINATED BY THE TOWN.

BASELINE EXISTING CEMETERY ROAD
SEE SHEET C2.0

END NORTH DRIVE @ 5+25
BEGIN CEMETERY ROAD @ 15+22.53

EXISTING CEMETERY GATE

END=5+25
PT=5+21.64
R30.00'
PRC=5+09.33
PC=4+94.75
R165.00'
PT=4+75.51
R30.00'
4+00
5+00
PRC=4+39.57

BEGIN EXISTING GRAVEL PARKING AREA,
3+87 +/-

PT=3+54.20
4+00
R70.69'

EXISTING 8' POWER LINE ESMT

NEW ACCESS ESMT REQ'D
APN 401-03-001P

BASELINE NORTH DRIVE

PC=3+30.83
10'
PT=3+02.37
3+00
R22.00'
PRC=2+76.13

TRANSITION LANE WIDTH FROM 9' TO 10'
STA 2+76.13 TO 3+02.37

USE 1:1 SLOPE AND/OR ADD WALL TO FIT NEW EASEMENT. PROVIDE SHOP DWG TO ENGINEER FOR APPROVAL PRIOR TO CONST.

NEW ACCESS EASEMENT REQ'D
APN 401-11-007C
185 SF +/-

NEW ACCESS EASEMENT REQ'D
APN 401-11-031A
25 SF +/-

TRANSITION LANE WIDTH FROM 18' TO 9'
STA 2+30 TO 2+50

APN 401-11-0019U
PATHWAY REAL ESTATE

APN 401-03-001N
TOWN OF JEROME

APN 401-11-005A
PATHWAY REALTY

APN 401-11-005B
CANTO

APN 401-11-006
PETERSON

APN 401-11-007C
LEACHMAN

APN 401-11-031A
CROSBY

APN 401-11-008
McWHIRTER & HUERTA

APN 401-03-001P
JEROME VERDE DEVELOPMENT CO.

0+60.84, 9.00' LT
FG=4868.29

0+25.64, 9.00' LT
FG=4874.10

PT=0+52.48
R30.00'
R20.00'
R35.00'

0+14.34, 23.50' LT
FG=4876.52

PC=0+14.97
R16.00'
BEGIN=0+00

0+12.09, 34.29' RT
FG=4873.67

0+60.84, 9.00' RT
FG=4868.29

1+00
2+00
16.0'
20' R/W
PC=1+68.21
R110.00'

NOTE: THERE IS AN EXISTING WATER UTILITY IN THIS AREA. LOCATION AND DEPTH TBD AT TIME OF CONSTRUCTION

EXISTING BLDG HAS BEEN REMOVED
A NEW BLDG IS PENDING

N O R T H

0 10' 20' 40'
SCALE: 1"=20' @ 24"x36"

Profile View of NORTH DRIVE

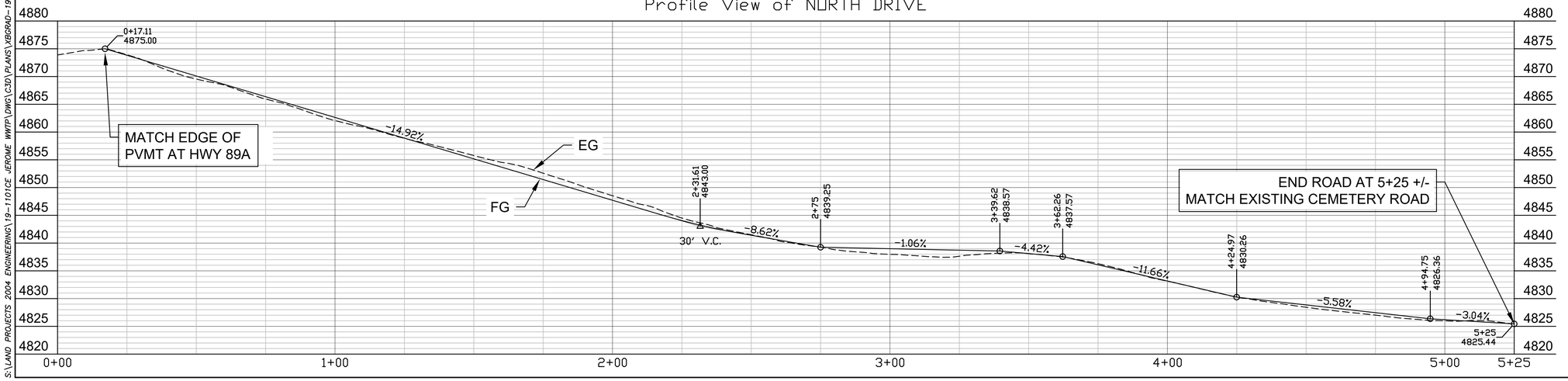

NO	BY	DATE	REVISIONS	DATE	APP.

49106
KRISHAN GEVINDA GINIGE
10/31/25
ARIZONA, U.S.A.

PREPARED BY:
DESIGNED BY:
DRAWN BY: NMW
CHECKED BY: KG
SCALE: AS SHOWN
DATE 10/31/25
JOB NO. 19-1101CE

TITLE
NORTH DR IMPROVEMENTS

JOB
JEROME WWTP
GRADING & UTILITIES PLANS
YAVAPAI COUNTY AZ

PREPARED BY:
SOUTHWESTERN ENVIRONMENTAL CONSULTANTS, INC
825 COVE PARKWAY
COTTONWOOD, AZ 86326
928-282-7787

SHEET
C2.2
12 OF 99 SHEETS

JOB NO. 19-1101CE

© 2025, SEC, Inc., All Rights Reserved. This document is protected under the United States Copyright Act. No part may be reproduced in any form or by any means or stored in a database or retrieval system, without the prior written permission of SEC, Inc. These plans/documents have been prepared using technical knowledge that would be applied by other qualified registrants who practice the same profession in the same area and at the same time. Efforts have been made to be as accurate as possible. However, plans/documents could contain unintentional technical inaccuracies, typographical errors or omissions. Users of these plans/documents should understand that it is highly probable that errors and omissions will occur in any plan/document preparation process.

S:\LAND PROJECTS 2004 ENGINEERING\19-1101CE JEROME WWTP\DWG\C3D\PLANS\XBGRAD-19-1101CE.DWG

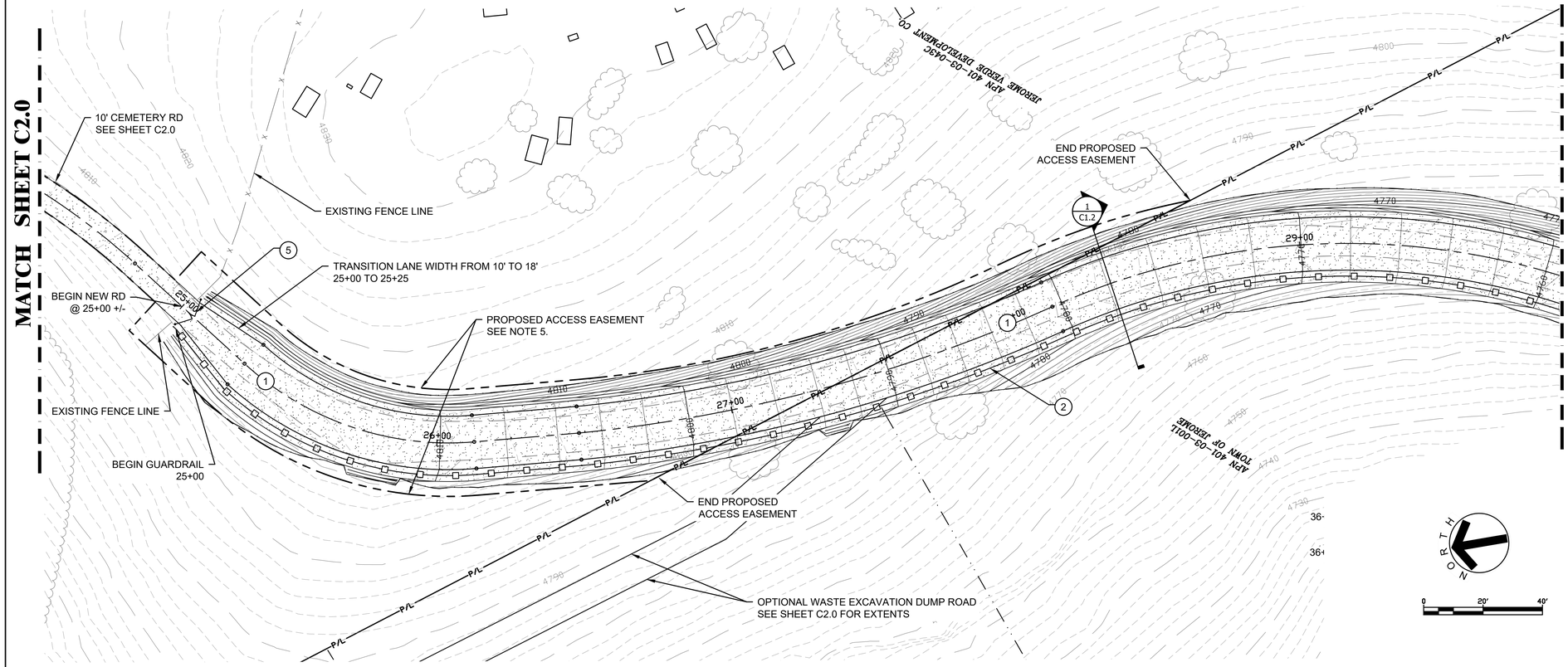

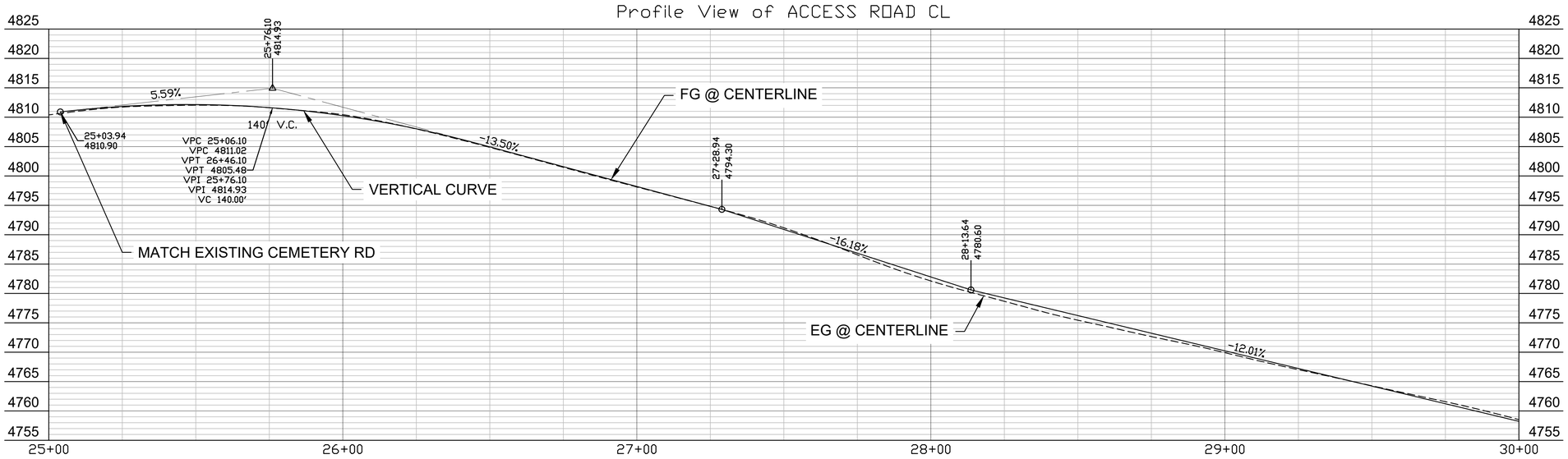

CALLOUTS-WWTP ACCESS RD	
1	INSTALL ACCESS ROAD PER DETAIL 1, SHEET C1.2
2	INSTALL GUARD RAIL PER ADOT STDS OR EQUAL
3	CATCH BASIN PER MSD 537, DOUBLE GRATE & 18" CMP. SEE PROFILE ON THIS SHEET
4	INSTALL 4' WIDE RIP RAP AT DRAIN PIPE OUTLET. SEE NOTE 2.
5	INSTALL 12' WIDE CHAIN LINK SWING GATE AT EXISTING FENCE LINE PER MSD 160 OR AS DIRECTED BY THE TOWN.

NOTES

1. THE CEMETARY IS A HISTORICAL SITE. ANY IMPROVEMENTS SHALL COMPLY WITH THE RESTRICTIONS FOR THE SITE. CONTRACTOR SHALL CONSULT WITH THE TOWN FOR DETAILS.
2. ALL RIP RAP SHALL BE D50=6" x 12" DEEP w/GEOTEXTILE FABRIC UNDERLAY UNLESS OTHERWISE INDICATED.
3. ALL SLOPES STEEPER THAN 2:1 SHALL HAVE EROSION PROTECTION PER GEOTECHNICAL ENGINEER RECOMMENDATIONS.
4. LINE ALL PONDS, DITCHES, DRAINAGE FLOW PATHS WITH RIP RAP TO HEIGHT=MIN. DEPTH. RIP RAP NOT SHOWN FOR CLARITY.
5. PROPOSED ACCESS EASEMENTS ARE REQUIRED THROUGH THE PRIVATE PROPERTIES SHOWN IN THESE PLANS. SHOWN FOR REFERENCE ONLY. FINAL DETAILS TO BE COORDINATED BY THE TOWN.

NO	BY	DATE	REVISIONS	DATE	APP.

Professional Engineer
49109
KRISHAN GEVINDA GINIGE
10/31/25
DATE SIGNED
ARIZONA, U.S.A.

PREPARED BY:
DESIGNED BY:
DRAWN BY: NMW
CHECKED BY: KG
SCALE: AS SHOWN
DATE 10/31/25
JOB NO. 19-1101CE

TITLE
WWTP ACCESS RD P&P 25+00+TO 30+00

JOB
JEROME WWTP
GRADING & UTILITIES PLANS
YAVAPAI COUNTY AZ

PREPARED BY:
SEC Inc.
SOUTHWESTERN ENVIRONMENTAL CONSULTANTS, INC
825 COVE PARKWAY
COTTONWOOD, AZ 86326
928-282-7787

SHEET
C2.3
13 OF 99 SHEETS

JOB NO. 19-1101CE

© 2025, SEC, Inc., All Rights Reserved. This document is protected under the United States Copyright Act. No part may be reproduced in any form or by any means or stored in a database or retrieval system, without the prior written permission of SEC, Inc. These plans/documents have been prepared using technical knowledge that would be applied by other qualified registrants who practice the same profession in the same area and at the same time. Efforts have been made to be as accurate as possible. However, plans/documents could contain unintentional technical inaccuracies, typographical errors or omissions. Users of these plans/documents should understand that it is highly probable that errors and omissions will occur in any plan/document preparation process.

S:\LAND PROJECTS 2004 ENGINEERING\19-1101CE JEROME WWTP\DWG\C3D\PLANS\XBGRAD-19-1101CE.DWG

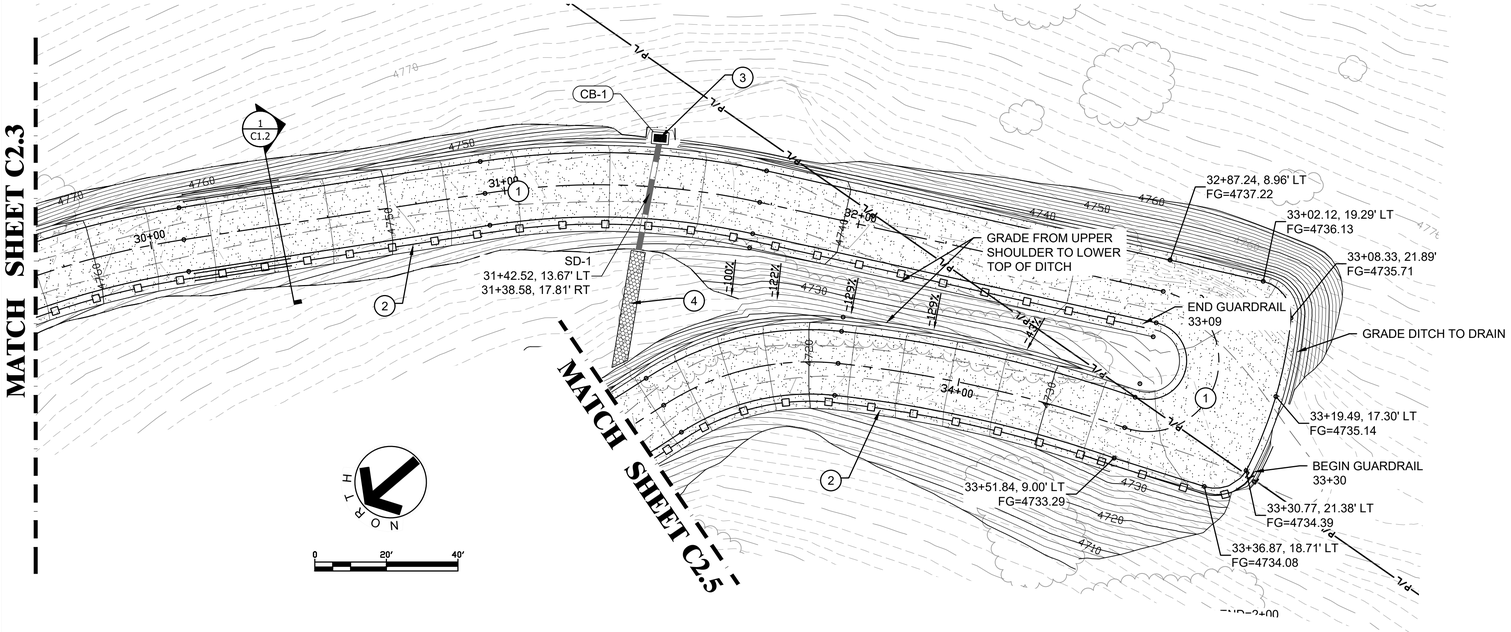

CALLOUTS-WWTP ACCESS RD	
1	INSTALL ACCESS ROAD PER DETAIL 1, SHEET C1.2
2	INSTALL GUARD RAIL PER ADOT STDS OR EQUAL
3	CATCH BASIN PER MSD 537, DOUBLE GRATE & 18" CMP. SEE PROFILE ON THIS SHEET
4	INSTALL 4' WIDE RIP RAP AT DRAIN PIPE OUTLET. SEE NOTE 2.
5	INSTALL 12' WIDE CHAIN LINK SWING GATE AT EXISTING FENCE LINE PER MSD 160 OR AS DIRECTED BY THE TOWN.

NOTES
1. THE CEMETARY IS A HISTORICAL SITE. ANY IMPROVEMENTS SHALL COMPLY WITH THE RESTRICTIONS FOR THE SITE. CONTRACTOR SHALL CONSULT WITH THE TOWN FOR DETAILS.
2. ALL RIP RAP SHALL BE D50=6" x 12" DEEP w/GEOTEXTILE FABRIC UNDERLAY UNLESS OTHERWISE INDICATED.
3. ALL SLOPES STEEPER THAN 2:1 SHALL HAVE EROSION PROTECTION PER GEOTECHNICAL ENGINEER RECOMMENDATIONS.
4. LINE ALL PONDS, DITCHES, DRAINAGE FLOW PATHS WITH RIP RAP TO HEIGHT=MIN. DEPTH. RIP RAP NOT SHOWN FOR CLARITY.
5. PROPOSED ACCESS EASEMENTS ARE REQUIRED THROUGH THE PRIVATE PROPERTIES SHOWN IN THESE PLANS. SHOWN FOR REFERENCE ONLY. FINAL DETAILS TO BE COORDINATED BY THE TOWN.

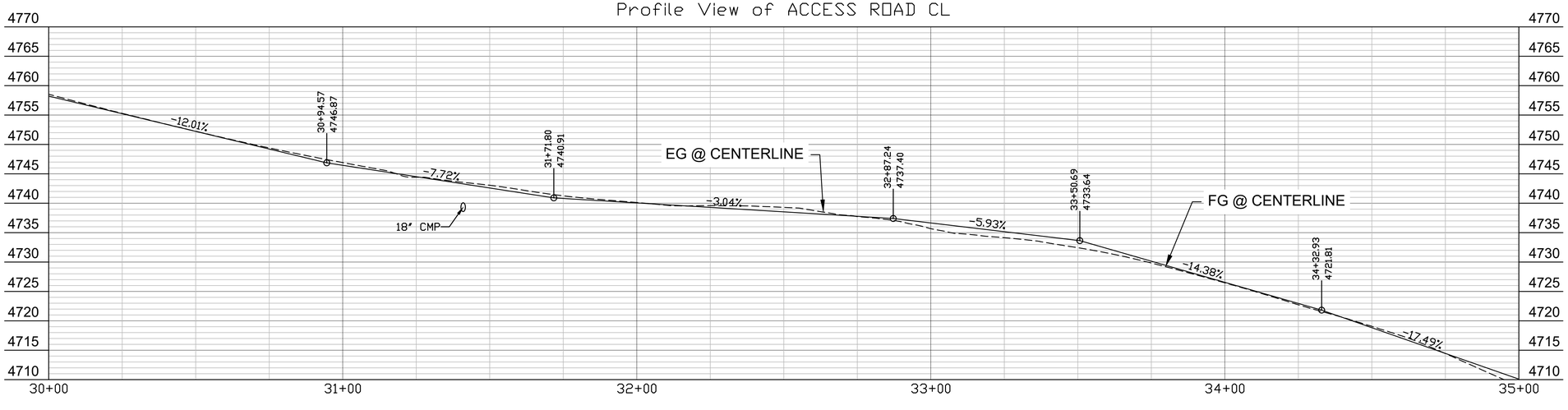

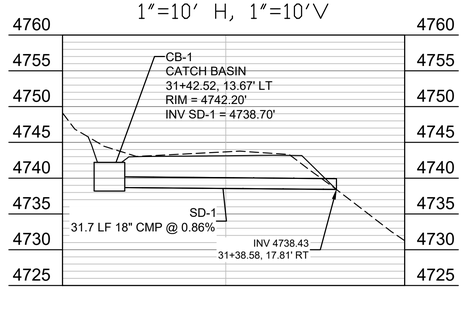

NO	BY	DATE	REVISIONS	DATE	APP.

49106
KRISHAN GEVINDA GINIGE
10/31/25
REGISTERED PROFESSIONAL ENGINEER
ARIZONA, U.S.A.

PREPARED BY:
DESIGNED BY:
DRAWN BY: NMW
CHECKED BY: KG
SCALE: AS SHOWN
DATE 10/31/25
JOB NO. 19-1101CE

TITLE
WWTP ACCESS RD P&P 30+00 TO 35+00

JOB
JEROME WWTP
GRADING & UTILITIES PLANS
YAVAPAI COUNTY AZ

PREPARED BY:
SOUTHWESTERN ENVIRONMENTAL CONSULTANTS, INC
825 COVE PARKWAY
COTTONWOOD, AZ 86326
928-282-7787

SHEET
C2.4
14 OF 99 SHEETS

JOB NO. 19-1101CE

© 2025, SEC, Inc., All Rights Reserved. This document is protected under the United States Copyright Act. No part may be reproduced in any form or by any means or stored in a database or retrieval system, without the prior written permission of SEC, Inc. These plans/documents have been prepared using technical knowledge that would be applied by other qualified registrants who practice the same profession in the same area and at the same time. Efforts have been made to be as accurate as possible. However, plans/documents could contain unintentional technical inaccuracies, typographical errors or omissions. Users of these plans/documents should understand that it is highly probable that errors and omissions will occur in any plan/document preparation process.

S:\LAND PROJECTS 2004 ENGINEERING\19-1101CE JEROME WWTP\DWG\C3D\PLANS\XBGRAD-19-1101CE.DWG

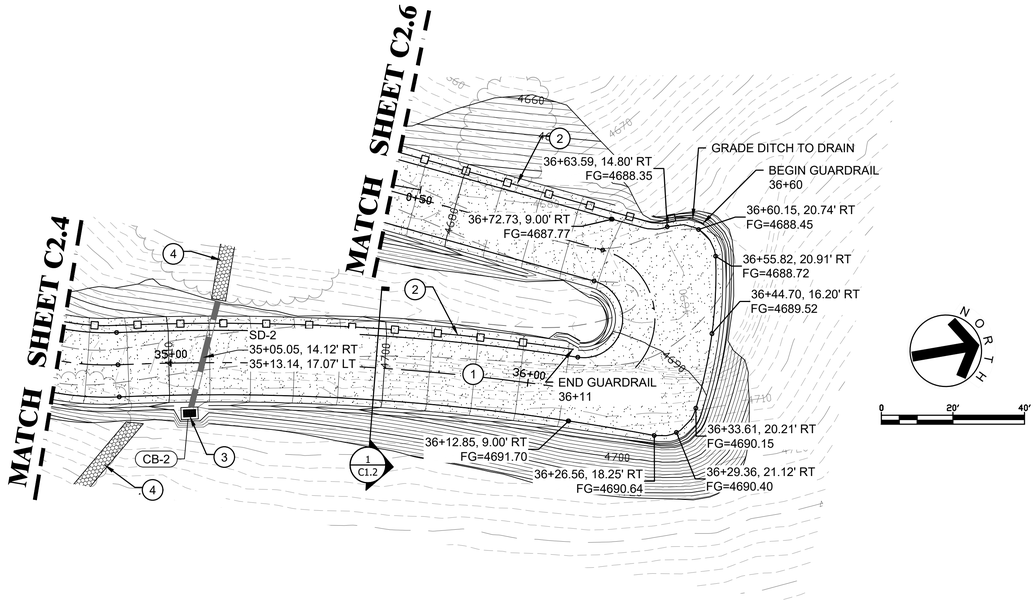

CALLOUTS-WWTP ACCESS RD	
1	INSTALL ACCESS ROAD PER DETAIL 1, SHEET C1.2
2	INSTALL GUARD RAIL PER ADOT STDS OR EQUAL
3	CATCH BASIN PER MSD 537, DOUBLE GRATE & 18" CMP. SEE PROFILE ON THIS SHEET
4	INSTALL 4' WIDE RIP RAP AT DRAIN PIPE OUTLET. SEE NOTE 2.
5	INSTALL 12' WIDE CHAIN LINK SWING GATE AT EXISTING FENCE LINE PER MSD 160 OR AS DIRECTED BY THE TOWN.

NOTES
1. THE CEMETARY IS A HISTORICAL SITE. ANY IMPROVEMENTS SHALL COMPLY WITH THE RESTRICTIONS FOR THE SITE. CONTRACTOR SHALL CONSULT WITH THE TOWN FOR DETAILS.
2. ALL RIP RAP SHALL BE D50=6" x 12" DEEP w/GEOTEXTILE FABRIC UNDERLAY UNLESS OTHERWISE INDICATED.
3. ALL SLOPES STEEPER THAN 2:1 SHALL HAVE EROSION PROTECTION PER GEOTECHNICAL ENGINEER RECOMMENDATIONS.
4. LINE ALL PONDS, DITCHES, DRAINAGE FLOW PATHS WITH RIP RAP TO HEIGHT=MIN. DEPTH. RIP RAP NOT SHOWN FOR CLARITY.
5. PROPOSED ACCESS EASEMENTS ARE REQUIRED THROUGH THE PRIVATE PROPERTIES SHOWN IN THESE PLANS. SHOWN FOR REFERENCE ONLY. FINAL DETAILS TO BE COORDINATED BY THE TOWN.

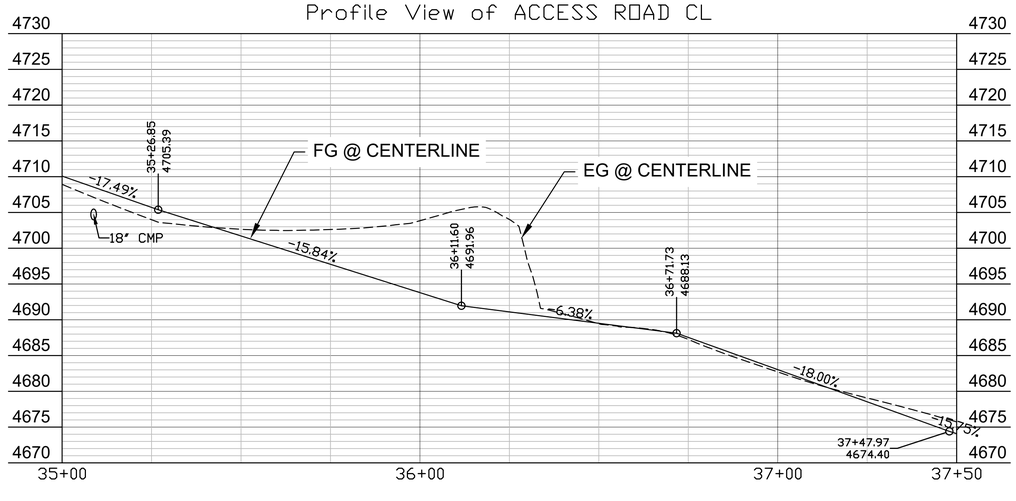

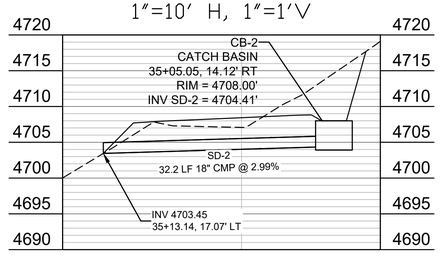

NO	BY	DATE	REVISIONS	DATE	APP.

Professional Engineer
49108
KRISHAN GEVINDA GINIGE
CERTIFICATE NO.
DATE SIGNED 10/31/25
ARIZONA, U.S.A.

PREPARED BY:
DESIGNED BY:
DRAWN BY: NMW
CHECKED BY: KG
SCALE: AS SHOWN
DATE 10/31/25
JOB NO. 19-1101CE

TITLE
WWTP ACCESS RD P&P 35+00 TO 37+50

JOB
JEROME WWTP
GRADING & UTILITIES PLANS
YAVAPAI COUNTY AZ

PREPARED BY:
SOUTHWESTERN ENVIRONMENTAL CONSULTANTS, INC
825 COVE PARKWAY
COTTONWOOD, AZ 86326
928-282-7787

SHEET
C2.5
15 OF 99 SHEETS

JOB NO. 19-1101CE

© 2025, SEC, Inc., All Rights Reserved. This document is protected under the United States Copyright Act. No part may be reproduced in any form or by any means or stored in a database or retrieval system, without the prior written permission of SEC, Inc. These plans/documents have been prepared using technical knowledge that would be applied by other qualified registrants who practice the same profession in the same area and at the same time. Efforts have been made to be as accurate as possible. However, plans/documents could contain unintentional technical inaccuracies, typographical errors or omissions. Users of these plans/documents should understand that it is highly probable that errors and omissions will occur in any plan/document preparation process.

S:\LAND PROJECTS 2004 ENGINEERING\19-1101CE JEROME WWTP\DWG\C3D\PLANS\XBGRAD-19-1101CE.DWG

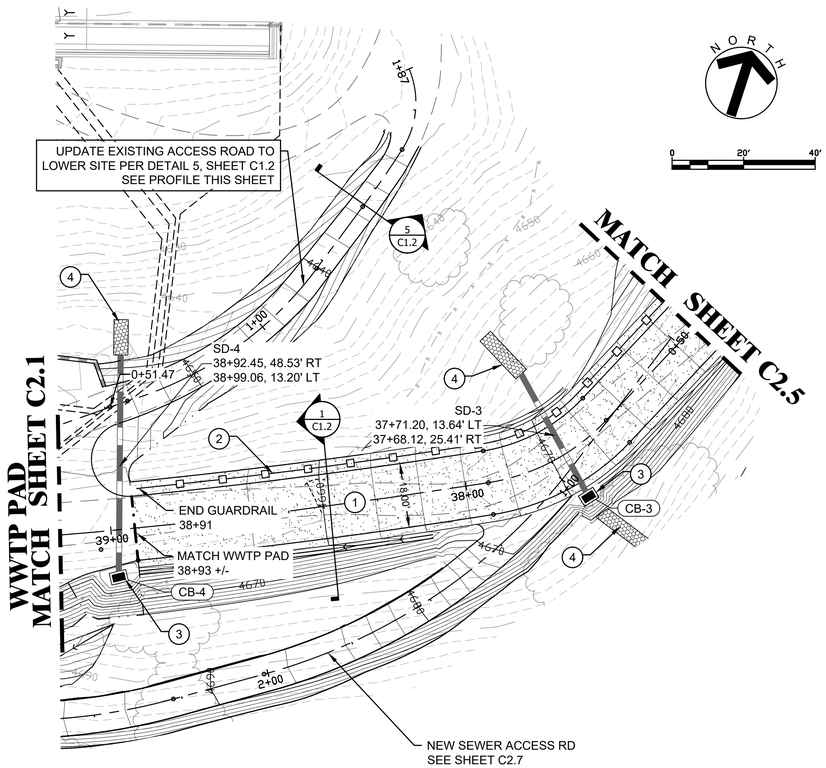

CALLOUTS-WWTP ACCESS RD	
1	INSTALL ACCESS ROAD PER DETAIL 1, SHEET C1.2
2	INSTALL GUARD RAIL PER ADOT STDS OR EQUAL
3	CATCH BASIN PER MSD 537, DOUBLE GRATE & 18" CMP. SEE PROFILE ON THIS SHEET
4	INSTALL 4' WIDE RIP RAP AT DRAIN PIPE OUTLET. SEE NOTE 2.
5	INSTALL 12' WIDE CHAIN LINK SWING GATE AT EXISTING FENCE LINE PER MSD 160 OR AS DIRECTED BY THE TOWN.

NOTES
1. THE CEMETARY IS A HISTORICAL SITE. ANY IMPROVEMENTS SHALL COMPLY WITH THE RESTRICTIONS FOR THE SITE. CONTRACTOR SHALL CONSULT WITH THE TOWN FOR DETAILS.
2. ALL RIP RAP SHALL BE D50=6" x 12" DEEP w/GEOTEXTILE FABRIC UNDERLAY UNLESS OTHERWISE INDICATED.
3. ALL SLOPES STEEPER THAN 2:1 SHALL HAVE EROSION PROTECTION PER GEOTECHNICAL ENGINEER RECOMMENDATIONS.
4. LINE ALL PONDS, DITCHES, DRAINAGE FLOW PATHS WITH RIP RAP TO HEIGHT=MIN. DEPTH. RIP RAP NOT SHOWN FOR CLARITY.
5. PROPOSED ACCESS EASEMENTS ARE REQUIRED THROUGH THE PRIVATE PROPERTIES SHOWN IN THESE PLANS. SHOWN FOR REFERENCE ONLY. FINAL DETAILS TO BE COORDINATED BY THE TOWN.

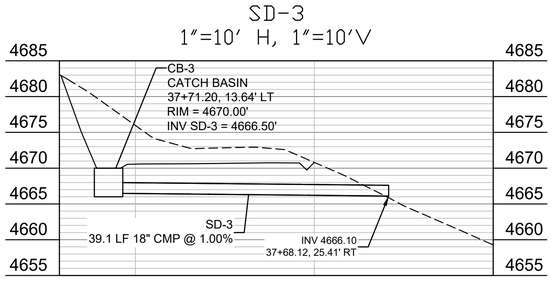

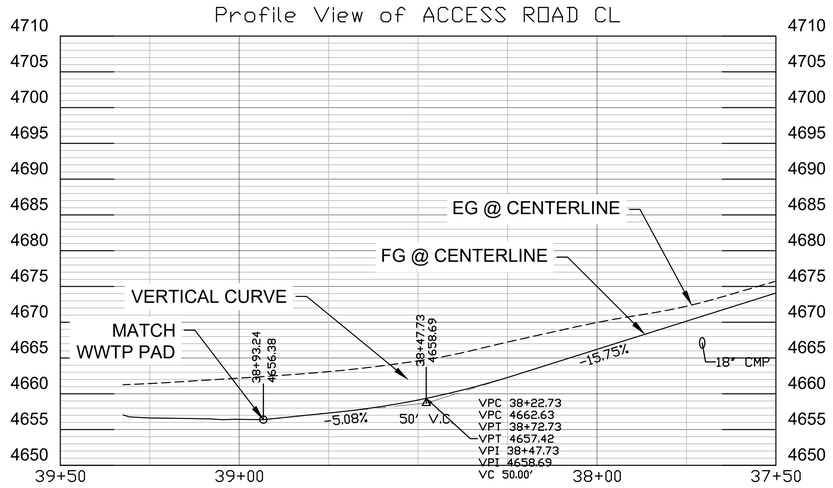

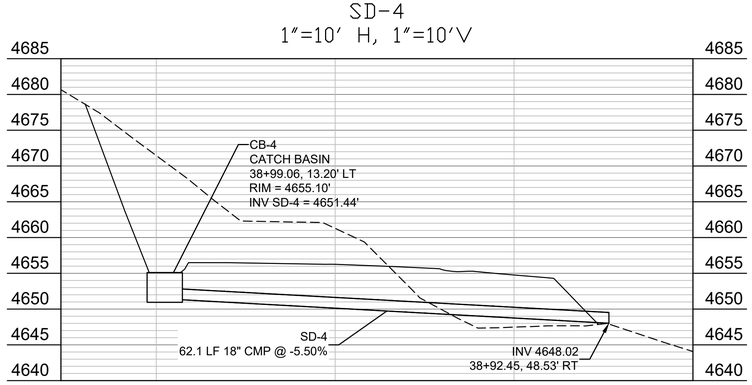

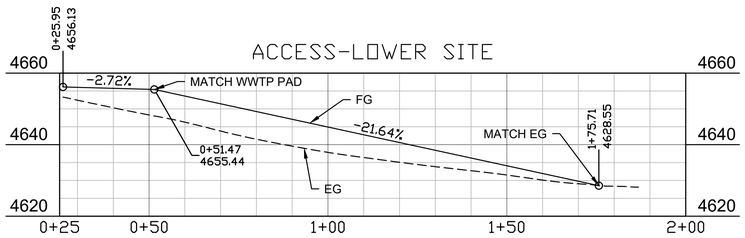

NO	BY	DATE	REVISIONS	DATE	APP.

PREPARED BY:
DESIGNED BY:
DRAWN BY: NMW
CHECKED BY: KG
SCALE: AS SHOWN
DATE 10/31/25
JOB NO. 19-1101CE

TITLE
WWTP ACCESS RD P&P 37+50 TO 39+75

JOB
JEROME WWTP
GRADING & UTILITIES PLANS
YAVAPAI COUNTY AZ

PREPARED BY:
SOUTHWESTERN ENVIRONMENTAL CONSULTANTS, INC
825 COVE PARKWAY
COTTONWOOD, AZ 86326
928-282-7787

SHEET
C2.6
16 OF 99 SHEETS

JOB NO. 19-1101CE

© 2025, SEC, Inc., All Rights Reserved. This document is protected under the United States Copyright Act. No part may be reproduced in any form or by any means or stored in a database or retrieval system, without the prior written permission of SEC, Inc. These plans/documents have been prepared using technical knowledge that would be applied by other qualified registrants who practice the same profession in the same area and at the same time. Efforts have been made to be as accurate as possible. However, plans/documents could contain unintentional technical inaccuracies, typographical errors or omissions. Users of these plans/documents should understand that it is highly probable that errors and omissions will occur in any plan/document preparation process.

S:\LAND PROJECTS 2004 ENGINEERING\19-1101CE JEROME WWTP\DWG\C3D\PLANS\XBGRAD-19-1101CE.DWG

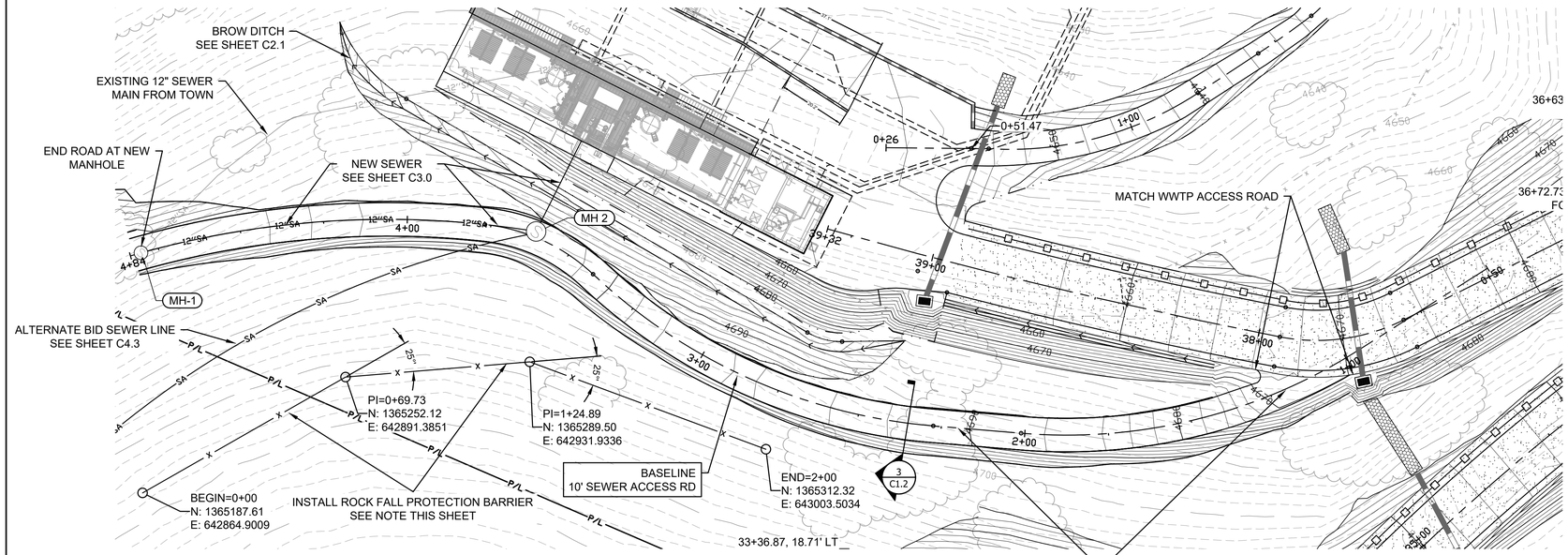

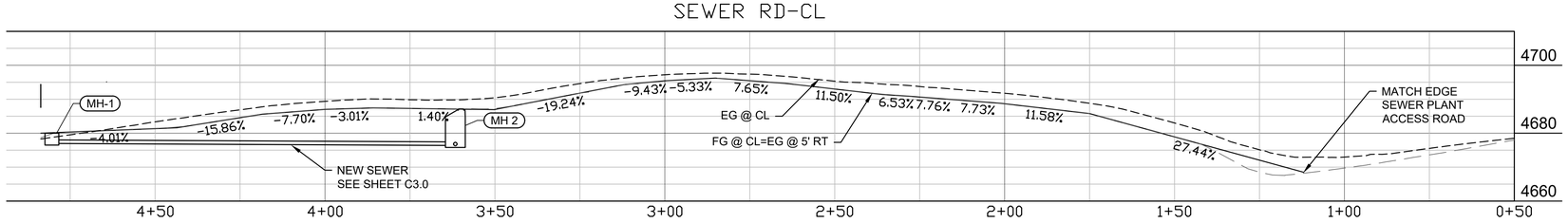

ROCK FALL PROTECTION BARRIER
PROVIDE ROCK FALL PROTECTION BARRIER. ALTERNATE BID ITEM. SEE PLAN SPECIFICATIONS FOR DETAILS.

NO	BY	DATE	REVISIONS	DATE	APP.

49106
KRISHAN
GEVINDA
GINIGE
10/31/25
ARIZONA, U.S.A.

PREPARED BY:
DESIGNED BY:
DRAWN BY: NMW
CHECKED BY: KG
SCALE: AS SHOWN
DATE 10/31/25
JOB NO. 19-1101CE

TITLE
NEW SEWER ACCESS ROAD

JOB
JEROME WWTP
GRADING & UTILITIES PLANS
YAVAPAI COUNTY AZ

PREPARED BY:
SOUTHWESTERN ENVIRONMENTAL CONSULTANTS, INC
825 COVE PARKWAY
COTTONWOOD, AZ 86326
928-282-7787

SHEET
C2.7
17 OF 99 SHEETS

JOB NO. 19-1101CE

© 2025, SEC, Inc. All Rights Reserved. This document is protected under the United States Copyright Act. No part may be reproduced in any form or by any means or stored in a database or retrieval system, without the prior written permission of SEC, Inc. These plans/documents have been prepared using technical knowledge that would be applied by other qualified registrants who practice the same profession in the same area and at the same time. Efforts have been made to be as accurate as possible. However, plans/documents could contain unintentional technical inaccuracies, typographical errors or omissions. Users of these plans/documents should understand that it is highly probable that errors and omissions will occur in any plan/document preparation process.

S:\LAND PROJECTS 2004 ENGINEERING\19-1101CE JEROME WWTP\DWG\C3D\PLANS\XBGRAD-19-1101CE.DWG

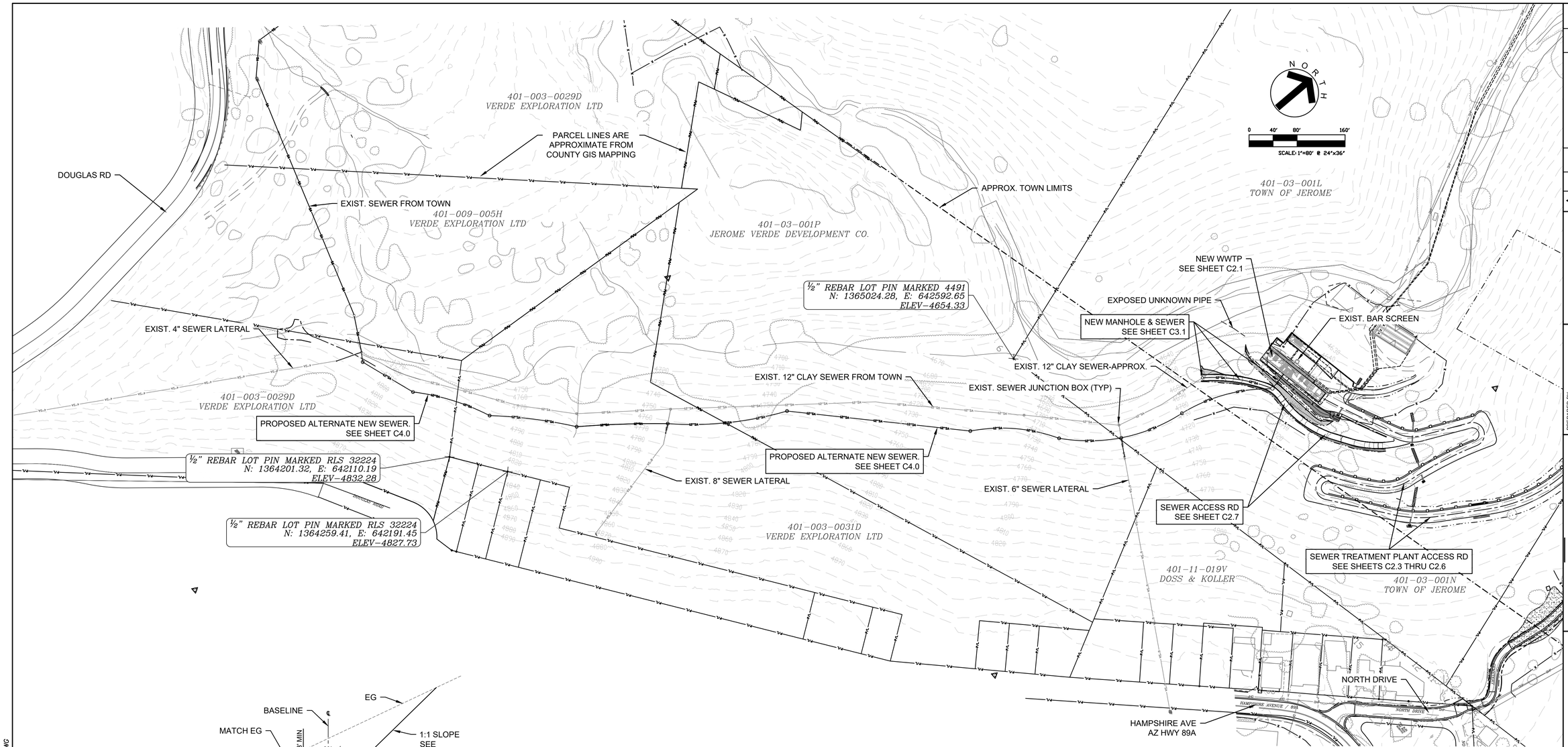

1 TYPICAL SEWER ROAD SECTION

1"=6'

CONSTRUCTION NOTES

1. THE EXISTING SEWER PIPES ARE VERY SHALLOW. EXTREME CAUTION IS REQUIRED TO ENSURE THE PIPES ARE PROTECTED DURING CONSTRUCTION. EXISTING SEWER TO REMAIN OPERATIONAL AT ALL TIMES UNTIL THE NEW SEWER IS ACTIVATED.
2. ALL TEMPORARY AND NEW SEWER PIPES AND STRUCTURES SHALL BE INSTALLED PER THE SPECIFICATIONS PROVIDED BY THE SEWER PLANT ENGINEER.

STRUCTURES					
STRUCTURE	DESC	RIM	INVERT	DEPTH (FT)	LOCATION
MH-1	MANHOLE-48"	4680.000'	OUT = 4677.00'	3.00	N: 1365243.77 E: 642820.46
MH 2	MANHOLE-60"	4687.137'	IN = 4676.40' OUT = 4676.30'	10.83	N: 1365321.33 E: 642909.50

PIPES			
PIPE	SIZE & TYPE	LENGTH	SLOPE
SS-1	12" FPVC	119.01'	0.50%
SS-2	12" DIP SEWER	30.20'	10.31%

ESTIMATE OF SEWER QTY'S		
ITEM	QTY	UNITS
12" PVC PIPE	100	LF
12" DIP	42	LF
48" MANHOLE	1	EA
60" DROP MANHOLE	1	EA

NO	BY	DATE	REVISIONS	DATE	APP.

Registered Professional Engineer (Civil)
CERTIFICATE NO.
49108
KRISHAN GEVINDA GINIGE
10/31/25
DATE SIGNED
ARIZONA, U.S.A.

PREPARED BY:
DESIGNED BY:
DRAWN BY: NMW
CHECKED BY: KG
SCALE: AS SHOWN
DATE: 10/31/25
JOB NO. 19-1101CE

TITLE: NEW SEWER SITE MAP, SURVEY CONTROL

JOB: JEROME WWTP
GRADING & UTILITIES PLANS
YAVAPAI COUNTY AZ

PREPARED BY:
SOUTHWESTERN ENVIRONMENTAL CONSULTANTS, INC
825 COVE PARKWAY
COTTONWOOD, AZ 86326
928-282-7787

SHEET
C3.0
18 OF 99 SHEETS

JOB NO. 19-1101CE

© 2025, SEC, Inc., All Rights Reserved. This document is protected under the United States Copyright Act. No part may be reproduced in any form or by any means or stored in a database or retrieval system, without the prior written permission of SEC, Inc. These plans/documents have been prepared using technical knowledge that would be applied by other qualified registrants who practice this same profession in the same area and at the same time. Efforts have been made to be as accurate as possible. However, plans/documents could contain unintentional technical inaccuracies, typographical errors or omissions. Users of these plans/documents should understand that it is highly probable that errors and omissions will occur in any plan/document preparation process.

S:\LAND PROJECTS 2004 ENGINEERING\19-1101CE JEROME WWTP\DWG\C3D\PLANS\XBSAN-19-1101CE.DWG

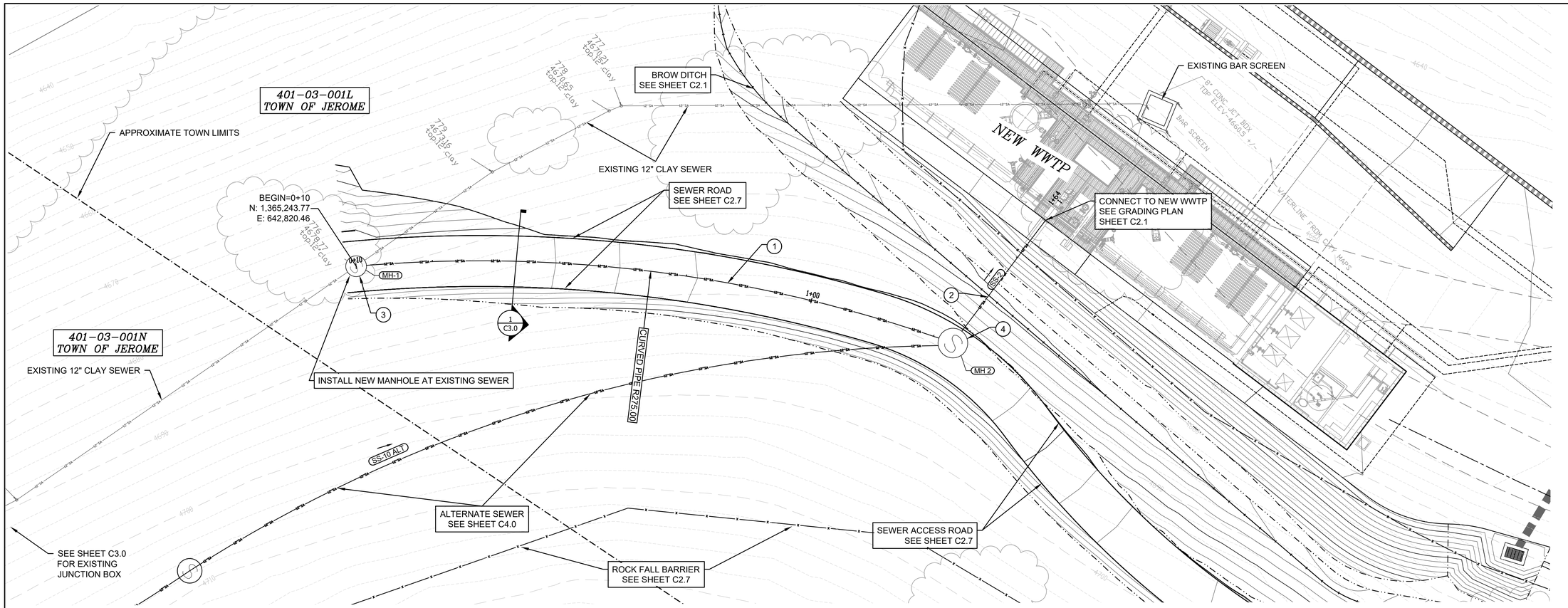

SEWER CALLOUTS. SEE CONSTRUCTION NOTES ON SHEET C3.0	
1	INSTALL 12" FPVC SEWER PIPE. CURVE PIPE @ 275' MIN. RADIUS. SEE NOTE 2, SHEET C3.0
2	INSTALL 12" DIP SEWER LINE
3	INSTALL 48" FLAT TOP SEWER MANHOLE PER MSD 420-1
4	INSTALL 60" SEWER MANHOLE PER MSD 420-1

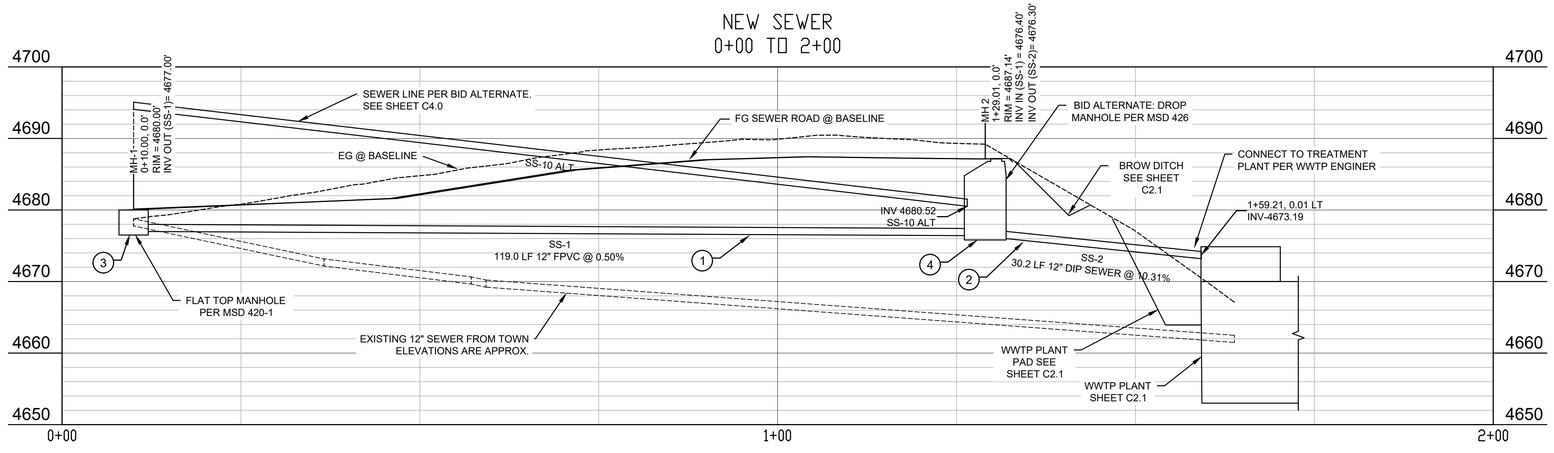

NO	BY	DATE	REVISIONS	DATE	APP.

Professional Engineer
CERTIFICATE NO.
49100
KRISHAN
GEVINDA
GINIGE
10/31/25
DATE SIGNED
ARIZONA, U.S.A.

PREPARED BY:
DESIGNED BY:
DRAWN BY: NMW
CHECKED BY: KG
SCALE: AS SHOWN
DATE 10/31/25
JOB NO. 19-1101CE

TITLE
NEW SEWER P&P

JOB
JEROME WWTP
GRADING & UTILITIES PLANS
YAVAPAI COUNTY AZ

PREPARED BY:
SOUTHWESTERN ENVIRONMENTAL CONSULTANTS, INC
825 COVE PARKWAY
COTTONWOOD, AZ 86326
928-282-7787

SHEET
C3.1
19 OF 99 SHEETS

JOB NO. 19-1101CE

© 2025, SEC, Inc., All Rights Reserved. This document is protected under the United States Copyright Act. No part may be reproduced in any form or by any means or stored in a database or retrieval system, without the prior written permission of SEC, Inc. These plans/documents have been prepared using technical knowledge that would be applied by other qualified registrants who practice the same profession in the same area and at the same time. Efforts have been made to be as accurate as possible. However, plans/documents could contain unintentional technical inaccuracies, typographical errors or omissions. Users of these plans/documents should understand that it is highly probable that errors and omissions will occur in any plan/document preparation process.

S:\LAND PROJECTS 2004 ENGINEERING\19-1101CE JEROME WWTP\DWG\C3D\PLANS\XBSAN-19-1101CE.DWG

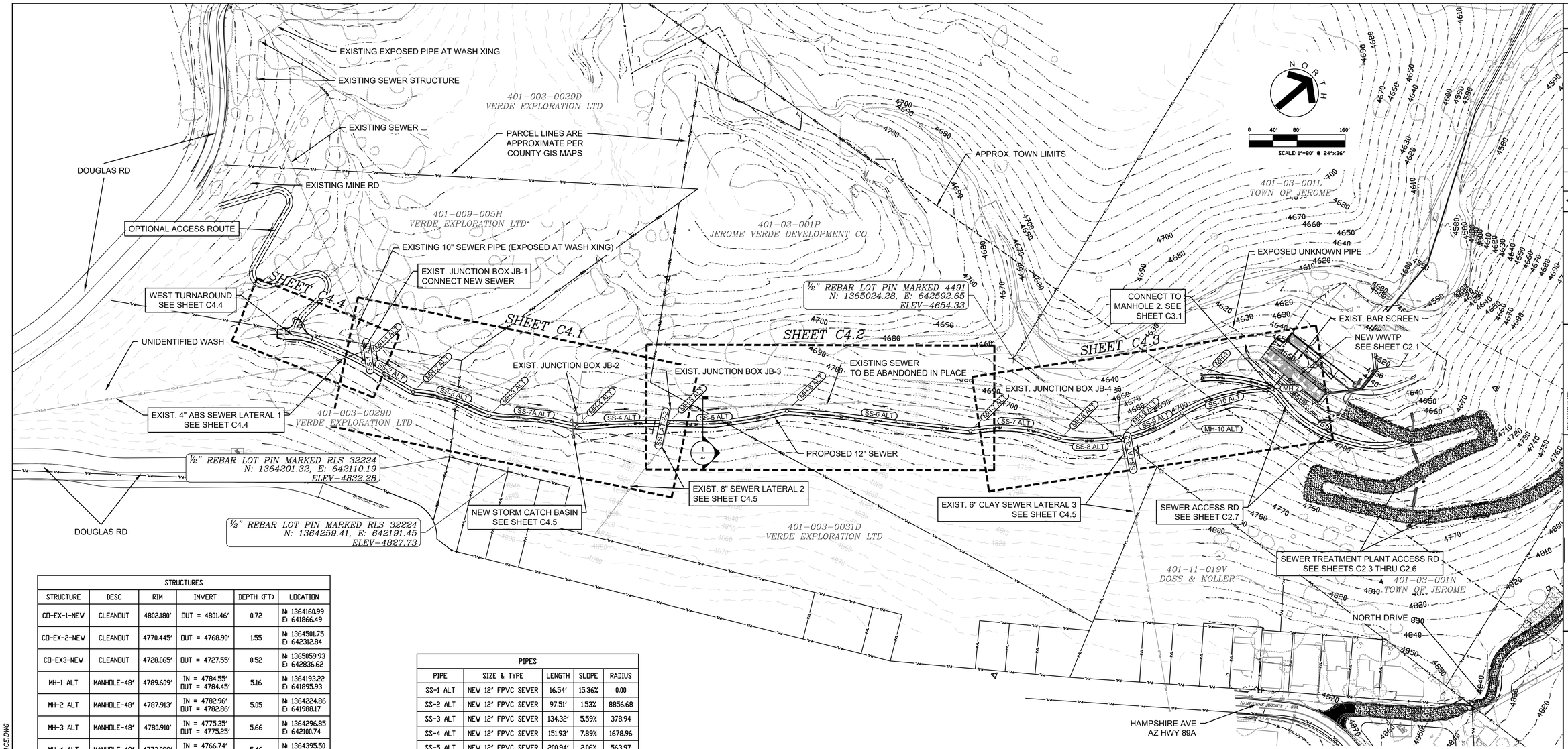

STRUCTURES					
STRUCTURE	DESC	RIM	INVERT	DEPTH (FT)	LOCATION
CO-EX-1-NEW	CLEANOUT	4802.180'	OUT = 4801.46'	0.72	N: 1364160.99 E: 641866.49
CO-EX-2-NEW	CLEANOUT	4770.445'	OUT = 4768.90'	1.55	N: 1364501.75 E: 642312.84
CO-EX3-NEW	CLEANOUT	4728.065'	OUT = 4727.55'	0.52	N: 1365059.93 E: 642836.62
MH-1 ALT	MANHOLE-48"	4789.609'	IN = 4784.55' OUT = 4784.45'	5.16	N: 1364193.22 E: 641895.93
MH-2 ALT	MANHOLE-48"	4787.913'	IN = 4782.96' OUT = 4782.86'	5.05	N: 1364224.86 E: 641988.17
MH-3 ALT	MANHOLE-48"	4780.910'	IN = 4775.35' OUT = 4775.25'	5.66	N: 1364296.85 E: 642100.74
MH-4 ALT	MANHOLE-48"	4772.099'	IN = 4766.74' OUT = 4766.64'	5.46	N: 1364395.50 E: 642208.64
MH-5 ALT	MANHOLE-48"	4759.803'	IN = 4754.64' IN = 4754.85' OUT = 4754.54'	5.26	N: 1364514.63 E: 642302.84
MH-6 ALT	MANHOLE-48"	4754.907'	IN = 4750.41' OUT = 4750.31'	4.59	N: 1364679.90 E: 642415.26
MH-7 ALT	MANHOLE-48"	4729.609'	IN = 4724.18' OUT = 4724.08'	5.53	N: 1364891.34 E: 642638.12
MH-8 ALT	MANHOLE-48"	4712.834'	IN = 4706.04' OUT = 4705.94'	6.89	N: 1364996.38 E: 642743.01
MH-9 ALT	MANHOLE-48"	4705.547'	IN = 4699.49' IN = 4700.39' OUT = 4699.39'	6.16	N: 1365075.93 E: 642809.37
MH-10 ALT	MANHOLE-48"	4704.172'	IN = 4699.06' OUT = 4698.96'	5.21	N: 1365179.64 E: 642843.49

PIPES				
PIPE	SIZE & TYPE	LENGTH	SLOPE	RADIUS
SS-1 ALT	NEW 12" FPVC SEWER	16.54'	15.36%	0.00
SS-2 ALT	NEW 12" FPVC SEWER	97.51'	1.53%	8856.68
SS-3 ALT	NEW 12" FPVC SEWER	134.32'	5.59%	378.94
SS-4 ALT	NEW 12" FPVC SEWER	151.93'	7.89%	1678.96
SS-5 ALT	NEW 12" FPVC SEWER	200.94'	2.06%	563.97
SS-6 ALT	NEW 12" FPVC SEWER	307.21'	8.51%	28124.53
SS-7 ALT	NEW 12" FPVC SEWER	150.27'	12.01%	277.65
SS-7A ALT	NEW 12" FPVC SEWER	146.41'	5.81%	779.23
SS-8 ALT	NEW 12" FPVC SEWER	104.13'	6.20%	296.23
SS-9 ALT	NEW 12" FPVC SEWER	109.85'	0.30%	286.54
SS-10 ALT	NEW 12" FPVC SEWER	155.46'	11.86%	278.54
SS-LAT-3-2	NEW 6' SEWER	27.25'	99.44%	0.00
SS-LAT 1-1	NEW 4' DIP SEWER	25.88'	1.00%	0.00
SS-LAT 1-2	NEW 4' SEWER	16.70'	80.70%	0.00
SS LAT-2-2	NEW 8' SEWER	12.60'	110.87%	0.00
SS LAT-3-1	NEW 6' SEWER	4.35'	1.77%	0.00
SS LAT 2-1	NEW 8' SEWER	3.71'	2.00%	0.00

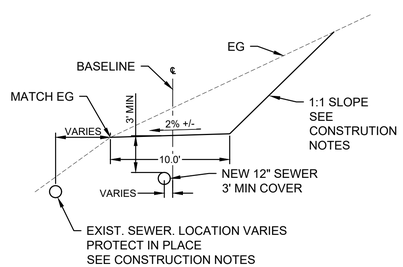

1 TYPICAL CONSTRUCTION ROAD SECTION
1"=6'

CONSTRUCTION NOTES
1. THE EXISTING SEWER IS VERY SHALLOW. EXTREME CAUTION IS REQUIRED TO ENSURE THE PIPE IS PROTECTED DURING CONSTRUCTION. EXISTING SEWER TO REMAIN OPERATIONAL AT ALL TIMES UNTIL THE NEW SEWER IS ACTIVATED.
2. THE EXISTING LATERAL SEWERS SHALL BE TEMPORARILY RE-ROUTED AS NEEDED DURING CONSTRUCTION. TO REMAIN OPERATIONAL UNTIL THE NEW SEWER IS ACTIVATED
3. WASTE MATERIAL FROM THE SEWER AND ROAD CONSTRUCTION SHALL BE REMOVED FROM PRIVATELY OWNED PROPERTIES.
4. CUT SLOPES STEEPER THAN 2:1 SHOULD BE EVALUATED AND APPROVED BY GEOTECHNICAL ENGINEER.
5. ALL TEMPORARY AND NEW SEWER PIPES AND STRUCTURES SHALL BE INSTALLED PER THE SPECIFICATIONS PROVIDED BY THE SEWER PLANT ENGINEER.
6. NEW EASEMENTS ARE NEEDED FOR BOTH EXISTING AND PROPOSED SEWER ACROSS PRIVATE PROPERTIES. TO BE COORDINATED BY THE TOWN.

EARTHWORK ESTIMATE (CUBIC YARDS)*			
	CUT	FILL	NET
SEWER ROAD	4,043	33	4010 CUT
*NO SHRINKAGE OR EXPANSION FACTORS APPLIED. EARTHWORK IS TO FINISHED GRADE. DEPTH TO SUBGRADE AND PIPE TRENCHING NOT ACCOUNTED FOR			

ESTIMATE OF SEWER QTY'S		
ITEM	QTY	UNITS
12" FPVC PIPE	1,568	LF
4" PVC SEWER	43	LF
6" PVC SEWER	32	LF
8" PVC SEWER	16	LF
48" MANHOLE	10	EA
CLEANOUT	3	EA

NO	BY	DATE	REVISIONS	DATE	APP.

Registered Professional Engineer
49108 KRISHAN GEVINDA GINIGE 10/31/25 DATE SIGNED ARIZONA, U.S.A.

PREPARED BY:
DESIGNED BY:
DRAWN BY: NMW
CHECKED BY: KG
DATE 10/31/25
SCALE: AS SHOWN
JOB NO. 19-1101CE

TITLE: ALT SEWER SITE MAP, SURVEY CONTROL

JOB: JEROME WWTP GRADING & UTILITIES PLANS

YAVAPAI COUNTY AZ

PREPARED BY:
SOUTHWESTERN ENVIRONMENTAL CONSULTANTS, INC
825 COVE PARKWAY
COTTONWOOD, AZ 86326
928-282-7787

SHEET
C4.0
20 OF 99 SHEETS

JOB NO. 19-1101CE

© 2025, SEC, Inc., All Rights Reserved. This document is protected under the United States Copyright Act. No part may be reproduced in any form or by any means or stored in a database or retrieval system, without the prior written permission of SEC, Inc. These plans/documents could contain unintentional technical inaccuracies, typographical errors or omissions. Users of these plans/documents should understand that it is highly probable that errors and omissions will occur in any plan/document preparation process. However, plans/documents are prepared using technical knowledge that would be applied by other qualified registrants who practice this same profession in the same area and at the same time. Efforts have been made to be as accurate as possible.

S:\LAND PROJECTS 2004 ENGINEERING\19-1101CE JEROME WWTP\DWG\C3D\PLANS\XBSAN-ALT-19-1101CE.DWG

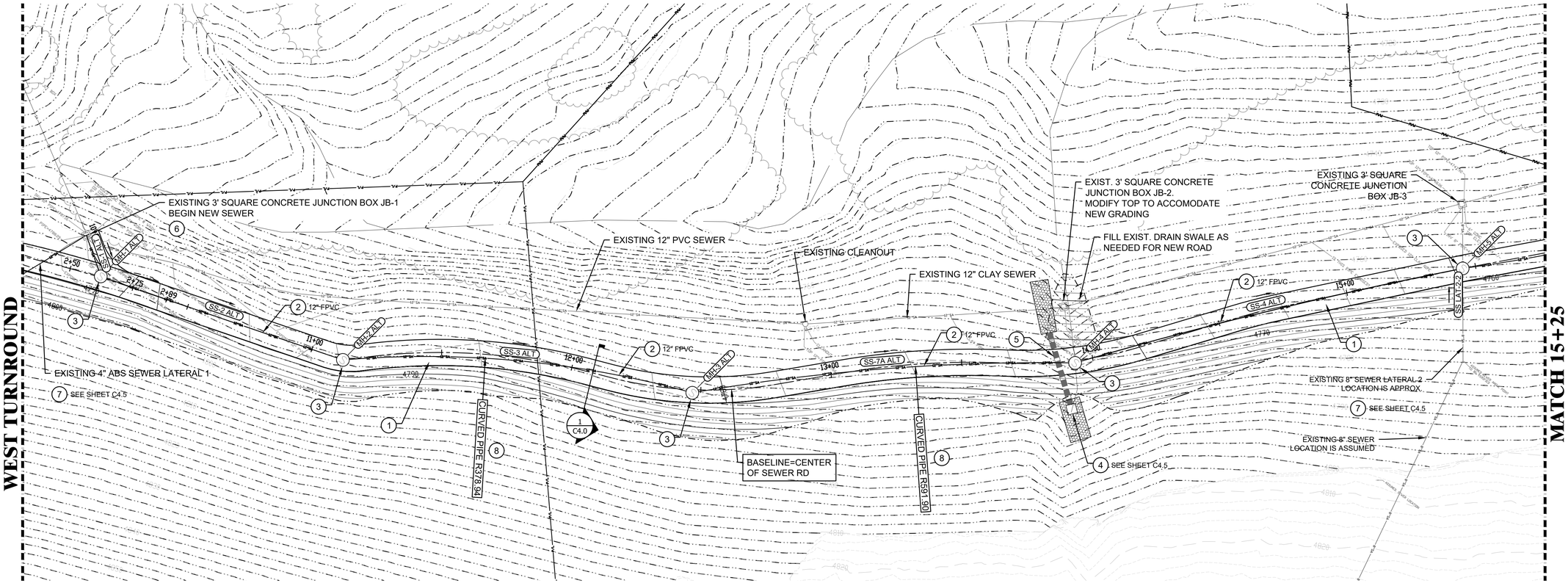

SEWER CALLOUTS. SEE CONSTRUCTION NOTES ON SHEET C4.0	
1	EXCAVATE SEWER CONSTRUCTION ROAD PER DETAIL 1, SHEET C4.0
2	INSTALL SEWER PIPE. SIZE AND TYPE PER PLAN. SEE NOTE 5, SHEET C4.0
3	INSTALL 48" SEWER MANHOLE PER MSD 420-1
4	INSTALL CATCH BASIN. SEE SHEET C4.5
5	INSTALL CULVERT. SEE SHEET C4.5
6	CONNECT NEW SEWER PIPE TO EXISTING JUNCTION BOX. CONTRACTOR TO PROVIDE DETAILS & SHOP DRAWINGS TO PROJECT ENGINEER FOR APPROVAL PRIOR TO CONNECTION.
7	PROTECT EXISTING SEWER LATERAL IN PLACE. CONNECT TO NEW SEWER WHEN ACTIVE. SEE PROFILES FOR DETAILS
8	INSTALL CURVED SEWER PIPE. RADIUS PER PLAN. SEE NOTE 5, SHEET C4.0.

CONSTRUCTION NOTES

1. THE EXISTING SEWER PIPES ARE VERY SHALLOW. EXTREME CAUTION IS REQUIRED TO ENSURE THE PIPES ARE PROTECTED DURING CONSTRUCTION. EXISTING SEWER TO REMAIN OPERATIONAL AT ALL TIMES UNTIL THE NEW SEWER IS ACTIVATED.
2. THE EXISTING LATERAL SEWERS SHALL BE TEMPORARILY RE-ROUTED AS NEEDED DURING CONSTRUCTION UNTIL THE NEW SEWER IS ACTIVATED.
3. WASTE MATERIAL FROM THE SEWER AND ROAD CONSTRUCTION SHALL BE REMOVED FROM PRIVATELY OWNED PROPERTIES.
4. CUT SLOPES STEEPER THAN 2:1 SHOULD BE EVALUATED AND APPROVED BY GEOTECHNICAL ENGINEER.
5. ALL TEMPORARY AND NEW SEWER PIPES AND STRUCTURES SHALL BE INSTALLED PER THE SPECIFICATIONS PROVIDED BY THE SEWER PLANT ENGINEER.
6. NEW EASEMENTS ARE NEEDED FOR BOTH EXISTING AND PROPOSED SEWER ACROSS PRIVATE LAND. TO BE COORDINATED BY THE TOWN.

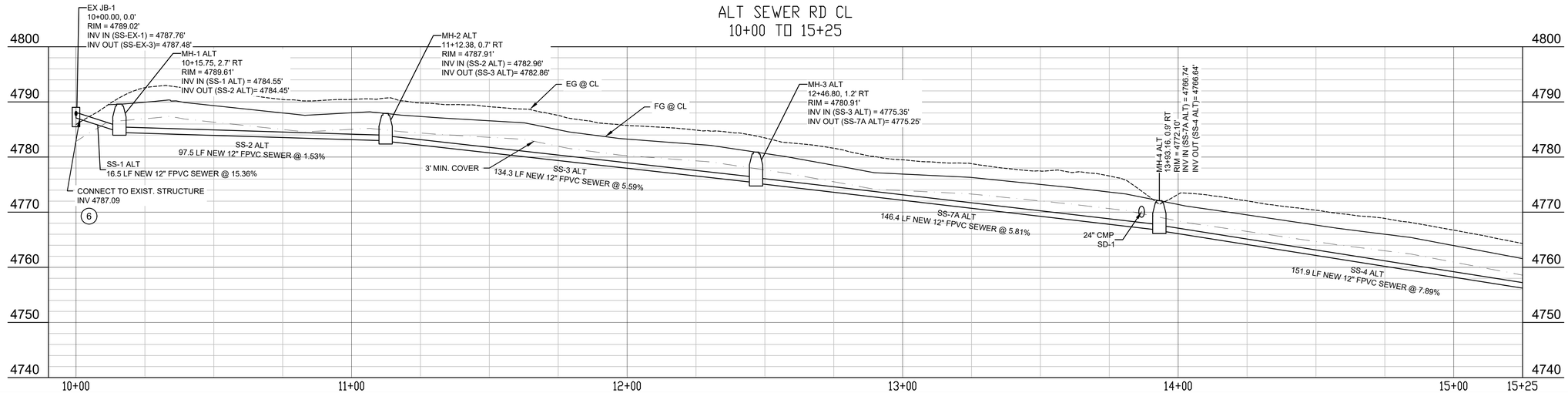

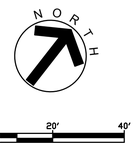

S:\LAND PROJECTS 2004 ENGINEERING\19-1101CE JEROME WWTP\DWG\C3D\PLANS\XBSAN-ALT-19-1101CE.DWG

NO	BY	DATE	REVISIONS	DATE	APP.



PREPARED BY:
DESIGNED BY:
DRAWN BY: NMW
CHECKED BY: KG
SCALE: AS SHOWN
DATE 10/31/25
JOB NO. 19-1101CE

TITLE *ALT SEWER P&P 10+00 TO 15+25*

JOB *JEROME WWTP GRADING & UTILITIES PLANS*

YAVAPAI COUNTY AZ

PREPARED BY:

SOUTHWESTERN ENVIRONMENTAL CONSULTANTS, INC
825 COVE PARKWAY
COTTONWOOD, AZ 86326
928-282-7787

SHEET
C4.1
21 OF 99 SHEETS

JOB NO. 19-1101CE

© 2025, SEC, Inc., All Rights Reserved. This document is protected under the United States Copyright Act. No part may be reproduced in any form or by any means or stored in a database or retrieval system, without the prior written permission of SEC, Inc. These plans/documents have been prepared using technical knowledge that would be applied by other qualified registrants who practice the same profession in the same area and at the same time. Efforts have been made to be as accurate as possible. However, plans/documents could contain unintentional technical inaccuracies, typographical errors or omissions. Users of these plans/documents should understand that it is highly probable that errors and omissions will occur in any plan/document preparation process.

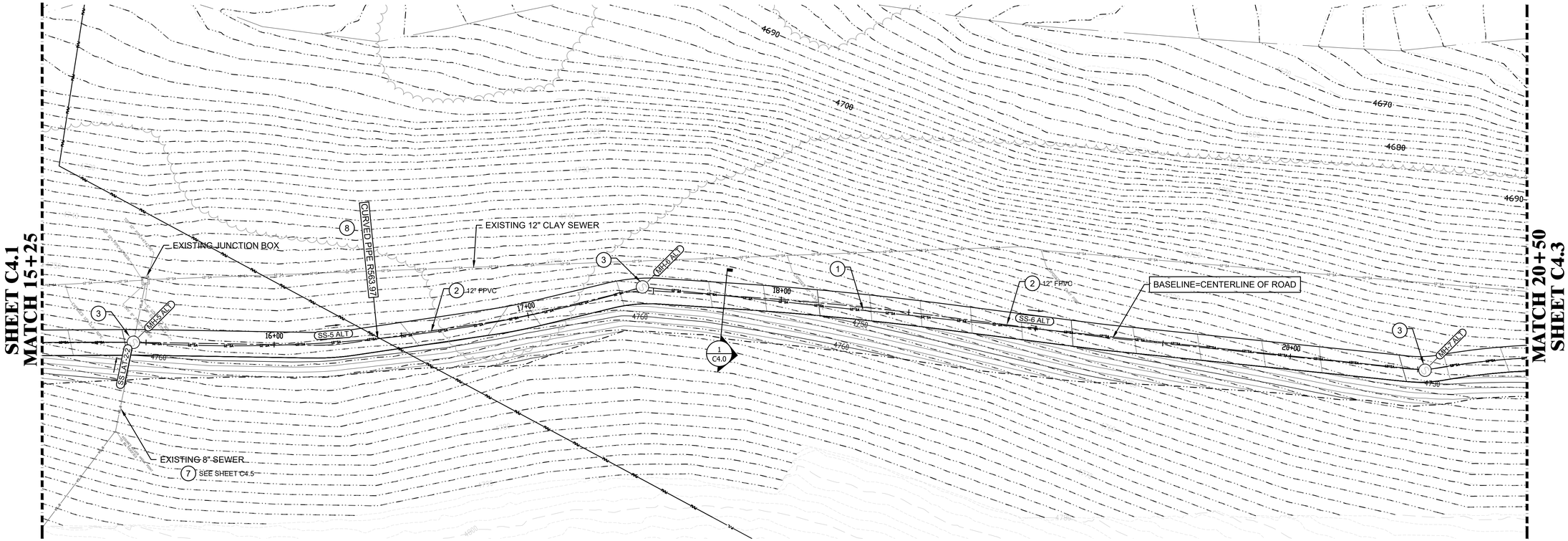

SEWER CALLOUTS. SEE CONSTRUCTION NOTES ON SHEET C4.0	
1	EXCAVATE SEWER CONSTRUCTION ROAD PER DETAIL 1, SHEET C4.0
2	INSTALL SEWER PIPE. SIZE AND TYPE PER PLAN. SEE NOTE 5, SHEET C4.0
3	INSTALL 48" SEWER MANHOLE PER MSD 420-1
4	INSTALL CATCH BASIN. SEE SHEET C4.5
5	INSTALL CULVERT. SEE SHEET C4.5
6	CONNECT NEW SEWER PIPE TO EXISTING JUNCTION BOX. CONTRACTOR TO PROVIDE DETAILS & SHOP DRAWINGS TO PROJECT ENGINEER FOR APPROVAL PRIOR TO CONNECTION.
7	PROTECT EXISTING SEWER LATERAL IN PLACE. CONNECT TO NEW SEWER WHEN ACTIVE. SEE PROFILES FOR DETAILS
8	INSTALL CURVED SEWER PIPE. RADIUS PER PLAN. SEE NOTE 5, SHEET C4.0.

CONSTRUCTION NOTES

1. THE EXISTING SEWER PIPES ARE VERY SHALLOW. EXTREME CAUTION IS REQUIRED TO ENSURE THE PIPES ARE PROTECTED DURING CONSTRUCTION. EXISTING SEWER TO REMAIN OPERATIONAL AT ALL TIMES UNTIL THE NEW SEWER IS ACTIVATED.
2. THE EXISTING LATERAL SEWERS SHALL BE TEMPORARILY RE-ROUTED AS NEEDED DURING CONSTRUCTION UNTIL THE NEW SEWER IS ACTIVATED.
3. WASTE MATERIAL FROM THE SEWER AND ROAD CONSTRUCTION SHALL BE REMOVED FROM PRIVATELY OWNED PROPERTIES.
4. CUT SLOPES STEEPER THAN 2:1 SHOULD BE EVALUATED AND APPROVED BY GEOTECHNICAL ENGINEER.
5. ALL TEMPORARY AND NEW SEWER PIPES AND STRUCTURES SHALL BE INSTALLED PER THE SPECIFICATIONS PROVIDED BY THE SEWER PLANT ENGINEER.
6. NEW EASEMENTS ARE NEEDED FOR BOTH EXISTING AND PROPOSED SEWER ACROSS PRIVATE LAND. TO BE COORDINATED BY THE TOWN.

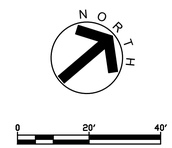

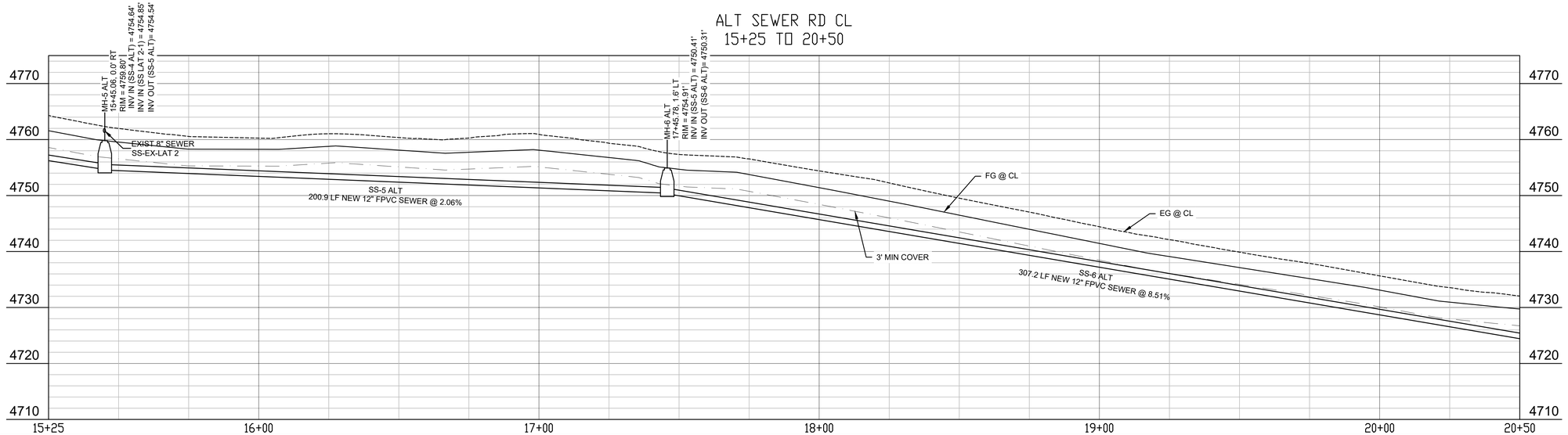

PREPARED BY:
DESIGNED BY:
DRAWN BY: NMW
CHECKED BY: KG
DATE 10/31/25
JOB NO. 19-1101CE
SCALE: AS SHOWN

NO	BY	DATE	REVISIONS	DATE	APP.

49108
KRISHAN GEVINDA GINIGE
10/31/25
REGISTERED PROFESSIONAL ENGINEER
ARIZONA, U.S.A.

TITLE
ALT SEWER P&P 15+25 TO 20+50

JOB
JEROME WWTP
GRADING & UTILITIES PLANS
YAVAPAI COUNTY AZ

PREPARED BY:
SEC Inc.
SOUTHWESTERN ENVIRONMENTAL CONSULTANTS, INC
825 COVE PARKWAY
COTTONWOOD, AZ 86326
928-282-7787

SHEET
C4.2
22 OF 99 SHEETS

JOB NO. 19-1101CE

© 2025, SEC, Inc., All Rights Reserved. This document is protected under the United States Copyright Act. No part may be reproduced in any form or by any means or stored in a database or retrieval system, without the prior written permission of SEC, Inc. These plans/documents have been prepared using technical knowledge that would be applied by other qualified registrants who practice the same profession in the same area and at the same time. Efforts have been made to be as accurate as possible. However, plans/documents could contain unintentional technical inaccuracies, typographical errors or omissions. Users of these plans/documents should understand that it is highly probable that errors and omissions will occur in any plan/document preparation process.

S:\LAND PROJECTS 2004 ENGINEERING\19-1101CE JEROME WWTP\DWG\C3D\PLANS\XBSAN-ALT-19-1101CE.DWG

SHEET C4.2
MATCH 20+50

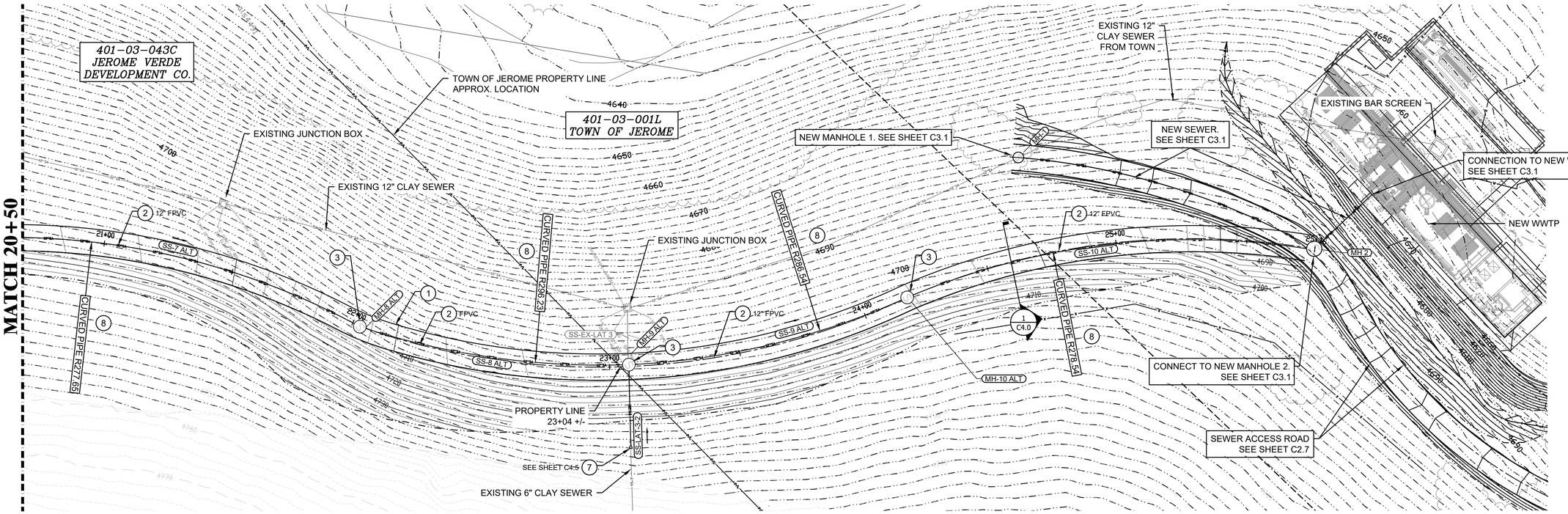

SEWER CALLOUTS. SEE CONSTRUCTION NOTES ON SHEET C4.0	
1	EXCAVATE SEWER CONSTRUCTION ROAD PER DETAIL 1, SHEET C4.0
2	INSTALL SEWER PIPE. SIZE AND TYPE PER PLAN. SEE NOTE 5, SHEET C4.0
3	INSTALL 48" SEWER MANHOLE PER MSD 420-1
4	INSTALL CATCH BASIN. SEE SHEET C4.5
5	INSTALL CULVERT. SEE SHEET C4.5
6	CONNECT NEW SEWER PIPE TO EXISTING JUNCTION BOX. CONTRACTOR TO PROVIDE DETAILS & SHOP DRAWINGS TO PROJECT ENGINEER FOR APPROVAL PRIOR TO CONNECTION.
7	PROTECT EXISTING SEWER LATERAL IN PLACE. CONNECT TO NEW SEWER WHEN ACTIVE. SEE PROFILES FOR DETAILS
8	INSTALL CURVED SEWER PIPE. RADIUS PER PLAN. SEE NOTE 5, SHEET C4.0.

CONSTRUCTION NOTES

1. THE EXISTING SEWER PIPES ARE VERY SHALLOW. EXTREME CAUTION IS REQUIRED TO ENSURE THE PIPES ARE PROTECTED DURING CONSTRUCTION. EXISTING SEWER TO REMAIN OPERATIONAL AT ALL TIMES UNTIL THE NEW SEWER IS ACTIVATED.
2. THE EXISTING LATERAL SEWERS SHALL BE TEMPORARILY RE-ROUTED AS NEEDED DURING CONSTRUCTION UNTIL THE NEW SEWER IS ACTIVATED.
3. WASTE MATERIAL FROM THE SEWER AND ROAD CONSTRUCTION SHALL BE REMOVED FROM PRIVATELY OWNED PROPERTIES.
4. CUT SLOPES STEEPER THAN 2:1 SHOULD BE EVALUATED AND APPROVED BY GEOTECHNICAL ENGINEER.
5. ALL TEMPORARY AND NEW SEWER PIPES AND STRUCTURES SHALL BE INSTALLED PER THE SPECIFICATIONS PROVIDED BY THE SEWER PLANT ENGINEER.
6. NEW EASEMENTS ARE NEEDED FOR BOTH EXISTING AND PROPOSED SEWER ACROSS PRIVATE LAND. TO BE COORDINATED BY THE TOWN.

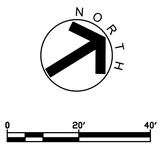

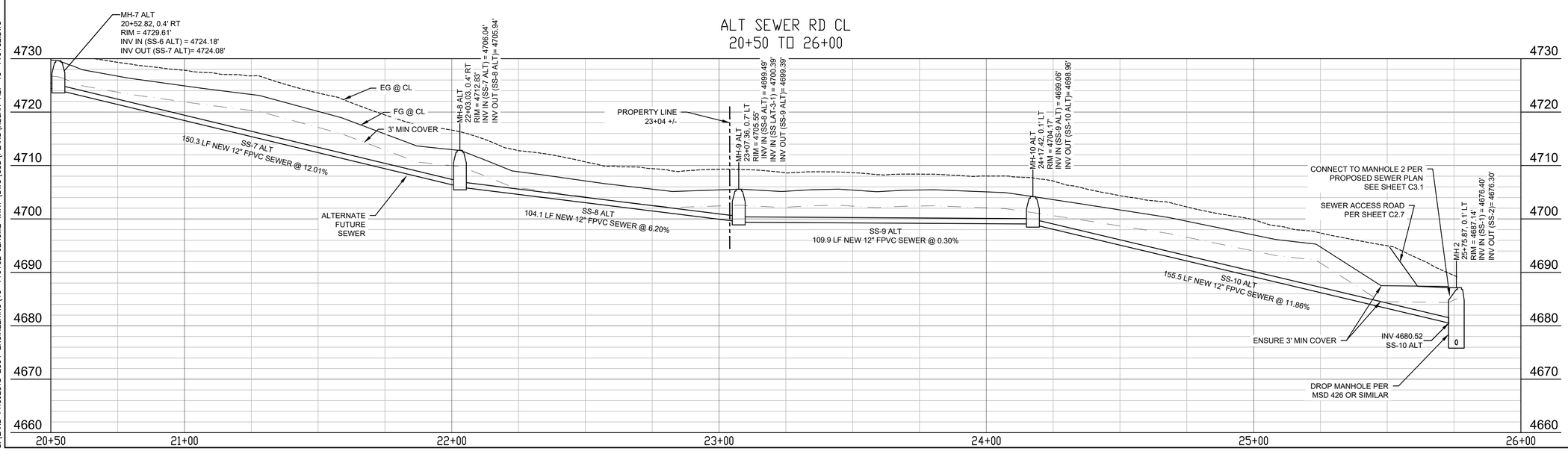

NO	BY	DATE	REVISIONS	DATE	APP.

PREPARED BY:
DESIGNED BY:
DRAWN BY: NMW
CHECKED BY: KG
DATE 10/31/25
JOB NO. 19-1101CE
SCALE: AS SHOWN

49108
KRISHAN
GEVINDA
GINIGE
10/31/25
REGISTERED PROFESSIONAL ENGINEER
ARIZONA, U.S.A.

TITLE
ALT SEWER P&P 20+50 TO 26+00

JOB
JEROME WWTP
GRADING & UTILITIES PLANS
YAVAPAI COUNTY AZ

PREPARED BY:
SEC Inc.
SOUTHWESTERN ENVIRONMENTAL CONSULTANTS, INC
825 COVE PARKWAY
COTTONWOOD, AZ 86326
928-282-7787

SHEET
C4.3
23 OF 99 SHEETS

JOB NO. 19-1101CE

© 2025 SEC, Inc., All Rights Reserved. This document is protected under the United States Copyright Act. No part may be reproduced in any form or by any means or stored in a database or retrieval system, without the prior written permission of SEC, Inc. These plans/documents have been prepared using technical knowledge that would be applied by other qualified registrants who practice the same profession in the same area and at the same time. Efforts have been made to be as accurate as possible. However, plans/documents could contain unintentional technical inaccuracies, typographical errors or omissions. Users of these plans/documents should understand that it is highly probable that errors and omissions will occur in any plan/document preparation process.

S:\LAND PROJECTS 2004 ENGINEERING\19-1101CE JEROME WWTP\DWG\C3D\PLANS\XBSAN-ALT-19-1101CE.DWG

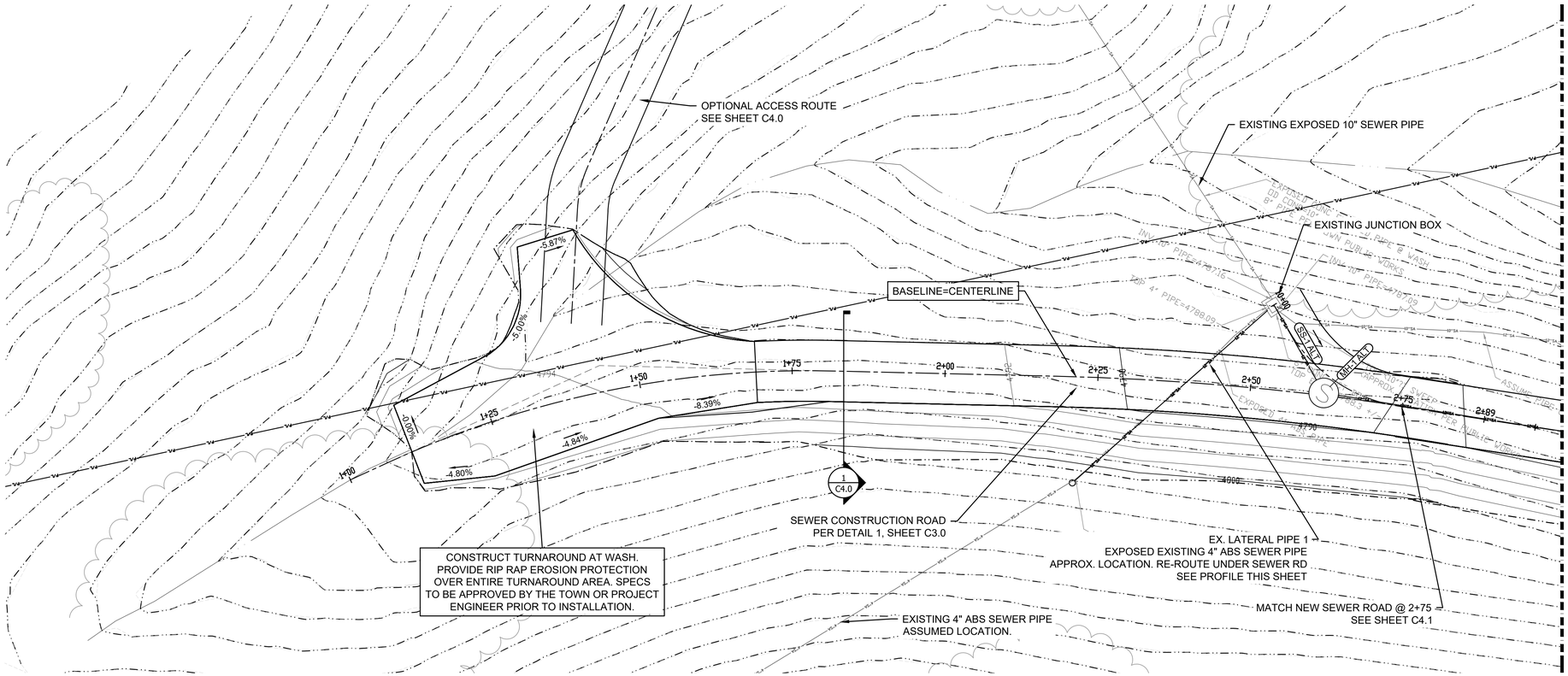
OPTIONAL ACCESS ROUTE
SEE SHEET C4.0
EXISTING EXPOSED 10" SEWER PIPE
EXISTING JUNCTION BOX
BASELINE=CENTERLINE
MATCH SEWER ROAD
SEE SHEET C4.1
-5.87%
-5.00%
-8.39%
-4.84%
-4.80%
-4.00%
1+00
1+25
1+50
1+75
2+00
2+25
2+50
2+75
2+89
4794
4792
4790
4788
4786
4784
4782
4780
4778
4776
4774
4772
4770
4768
4766
4764
4762
4760
4758
4756
4754
4752
4750
4748
4746
4744
4742
4740
4738
4736
4734
4732
4730
4728
4726
4724
4722
4720
4718
4716
4714
4712
4710
4708
4706
4704
4702
4700
4698
4696
4694
4692
4690
4688
4686
4684
4682
4680
4678
4676
4674
4672
4670
4668
4666
4664
4662
4660
4658
4656
4654
4652
4650
4648
4646
4644
4642
4640
4638
4636
4634
4632
4630
4628
4626
4624
4622
4620
4618
4616
4614
4612
4610
4608
4606
4604
4602
4600
4598
4596
4594
4592
4590
4588
4586
4584
4582
4580
4578
4576
4574
4572
4570
4568
4566
4564
4562
4560
4558
4556
4554
4552
4550
4548
4546
4544
4542
4540
4538
4536
4534
4532
4530
4528
4526
4524
4522
4520
4518
4516
4514
4512
4510
4508
4506
4504
4502
4500
4498
4496
4494
4492
4490
4488
4486
4484
4482
4480
4478
4476
4474
4472
4470
4468
4466
4464
4462
4460
4458
4456
4454
4452
4450
4448
4446
4444
4442
4440
4438
4436
4434
4432
4430
4428
4426
4424
4422
4420
4418
4416
4414
4412
4410
4408
4406
4404
4402
4400
4398
4396
4394
4392
4390
4388
4386
4384
4382
4380
4378
4376
4374
4372
4370
4368
4366
4364
4362
4360
4358
4356
4354
4352
4350
4348
4346
4344
4342
4340
4338
4336
4334
4332
4330
4328
4326
4324
4322
4320
4318
4316
4314
4312
4310
4308
4306
4304
4302
4300
4298
4296
4294
4292
4290
4288
4286
4284
4282
4280
4278
4276
4274
4272
4270
4268
4266
4264
4262
4260
4258
4256
4254
4252
4250
4248
4246
4244
4242
4240
4238
4236
4234
4232
4230
4228
4226
4224
4222
4220
4218
4216
4214
4212
4210
4208
4206
4204
4202
4200
4198
4196
4194
4192
4190
4188
4186
4184
4182
4180
4178
4176
4174
4172
4170
4168
4166
4164
4162
4160
4158
4156
4154
4152
4150
4148
4146
4144
4142
4140
4138
4136
4134
4132
4130
4128
4126
4124
4122
4120
4118
4116
4114
4112
4110
4108
4106
4104
4102
4100
4098
4096
4094
4092
4090
4088
4086
4084
4082
4080
4078
4076
4074
4072
4070
4068
4066
4064
4062
4060
4058
4056
4054
4052
4050
4048
4046
4044
4042
4040
4038
4036
4034
4032
4030
4028
4026
4024
4022
4020
4018
4016
4014
4012
4010
4008
4006
4004
4002
4000
3998
3996
3994
3992
3990
3988
3986
3984
3982
3980
3978
3976
3974
3972
3970
3968
3966
3964
3962
3960
3958
3956
3954
3952
3950
3948
3946
3944
3942
3940
3938
3936
3934
3932
3930
3928
3926
3924
3922
3920
3918
3916
3914
3912
3910
3908
3906
3904
3902
3900
3898
3896
3894
3892
3890
3888
3886
3884
3882
3880
3878
3876
3874
3872
3870
3868
3866
3864
3862
3860
3858
3856
3854
3852
3850
3848
3846
3844
3842
3840
3838
3836
3834
3832
3830
3828
3826
3824
3822
3820
3818
3816
3814
3812
3810
3808
3806
3804
3802
3800
3798
3796
3794
3792
3790
3788
3786
3784
3782
3780
3778
3776
3774
3772
3770
3768
3766
3764
3762
3760
3758
3756
3754
3752
3750
3748
3746
3744
3742
3740
3738
3736
3734
3732
3730
3728
3726
3724
3722
3720
3718
3716
3714
3712
3710
3708
3706
3704
3702
3700
3698
3696
3694
3692
3690
3688
3686
3684
3682
3680
3678
3676
3674
3672
3670
3668
3666
3664
3662
3660
3658
3656
3654
3652
3650
3648
3646
3644
3642
3640
3638
3636
3634
3632
3630
3628
3626
3624
3622
3620
3618
3616
3614
3612
3610
3608
3606
3604
3602
3600
3598
3596
3594
3592
3590
3588
3586
3584
3582
3580
3578
3576
3574
3572
3570
3568
3566
3564
3562
3560
3558
3556
3554
3552
3550
3548
3546
3544
3542
3540
3538
3536
3534
3532
3530
3528
3526
3524
3522
3520
3518
3516
3514
3512
3510
3508
3506
3504
3502
3500
3498
3496
3494
3492
3490
3488
3486
3484
3482
3480
3478
3476
3474
3472
3470
3468
3466
3464
3462
3460
3458
3456
3454
3452
3450
3448
3446
3444
3442
3440
3438
3436
3434
3432
3430
3428
3426
3424
3422
3420
3418
3416
3414
3412
3410
3408
3406
3404
3402
3400
3398
3396
3394
3392
3390
3388
3386
3384
3382
3380
3378
3376
3374
3372
3370
3368
3366
3364
3362
3360
3358
3356
3354
3352
3350
3348
3346
3344
3342
3340
3338
3336
3334
3332
3330
3328
3326
3324
3322
3320
3318
3316
3314
3312
3310
3308
3306
3304
3302
3300
3298
3296
3294
3292
3290
3288
3286
3284
3282
3280
3278
3276
3274
3272
3270
3268
3266
3264
3262
3260
3258
3256
3254
3252
3250
3248
3246
3244
3242
3240
3238
3236
3234
3232
3230
3228
3226
3224
3222
3220
3218
3216
3214
3212
3210
3208
3206
3204
3202
3200
3198
3196
3194
3192
3190
3188
3186
3184
3182
3180
3178
3176
3174
3172
3170
3168
3166
3164
3162
3160
3158
3156
3154
3152
3150
3148
3146
3144
3142
3140
3138
3136
3134
3132
3130
3128
3126
3124
3122
3120
3118
3116
3114
3112
3110
3108
3106
3104
3102
3100
3098
3096
3094
3092
3090
3088
3086
3084
3082
3080
3078
3076
3074
3072
3070
3068
3066
3064
3062
3060
3058
3056
3054
3052
3050
3048
3046
3044
3042
3040
3038
3036
3034
3032
3030
3028
3026
3024
3022
3020
3018
3016
3014
3012
3010
3008
3006
3004
3002
3000
2998
2996
2994
2992
2990
2988
2986
2984
2982
2980
2978
2976
2974
2972
2970
2968
2966
2964
2962
2960
2958
2956
2954
2952
2950
2948
2946
2944
2942
2940
2938
2936
2934
2932
2930
2928
2926
2924
2922
2920
2918
2916
2914
2912
2910
2908
2906
2904
2902
2900
2898
2896
2894
2892
2890
2888
2886
2884
2882
2880
2878
2876
2874
2872
2870
2868
2866
2864
2862
2860
2858
2856
2854
2852
2850
2848
2846
2844
2842
2840
2838
2836
2834
2832
2830
2828
2826
2824
2822
2820
2818
2816
2814
2812
2810
2808
2806
2804
2802
2800
2798
2796
2794
2792
2790
2788
2786
2784
2782
2780
2778
2776
2774
2772
2770
2768
2766
2764
2762
2760
2758
2756
2754
2752
2750
2748
2746
2744
2742
2740
2738
2736
2734
2732
2730
2728
2726
2724
2722
2720
2718
2716
2714
2712
2710
2708
2706
2704
2702
2700
2698
2696
2694
2692
2690
2688
2686
2684
2682
2680
2678
2676
2674
2672
2670
2668
2666
2664
2662
2660
2658
2656
2654
2652
2650
2648
2646
2644
2642
2640
2638
2636
2634
2632
2630
2628
2626
2624
2622
2620
2618
2616
2614
2612
2610
2608
2606
2604
2602
2600
2598
2596
2594
2592
2590
2588
2586
2584
2582
2580
2578
2576
2574
2572
2570
2568
2566
2564
2562
2560
2558
2556
2554
2552
2550
2548
2546
2544
2542
2540
2538
2536
2534
2532
2530
2528
2526
2524
2522
2520
2518
2516
2514
2512
2510
2508
2506
2504
2502
2500
2498
2496
2494
2492
2490
2488
2486
2484
2482
2480
2478
2476
2474
2472
2470
2468
2466
2464
2462
2460
2458
2456
2454
2452
2450
2448
2446
2444
2442
2440
2438
2436
2434
2432
2430
2428
2426
2424
2422
2420
2418
2416
2414
2412
2410
2408
2406
2404
2402
2400
2398
2396
2394
2392
2390
2388
2386
2384
2382
2380
2378
2376
2374
2372
2370
2368
2366
2364
2362
2360
2358
2356
2354
2352
2350
2348
2346
2344
2342
2340
2338
2336
2334
2332
2330
2328
2326
2324
2322
2320
2318
2316
2314
2312
2310
2308
2306
2304
2302
2300
2298
2296
2294
2292
2290
2288
2286
2284
2282
2280
2278
2276
2274
2272
2270
2268
2266
2264
2262
2260
2258
2256
2254
2252
2250
2248
2246
2244
2242
2240
2238
2236
2234
2232
2230
2228
2226
2224
2222
2220
2218
2216
2214
2212
2210
2208
2206
2204
2202
2200
2198
2196
2194
2192
2190
2188
2186
2184
2182
2180
2178
2176
2174
2172
2170
2168
2166
2164
2162
2160
2158
2156
2154
2152
2150
2148
2146
2144
2142
2140
2138
2136
2134
2132
2130
2128
2126
2124
2122
2120
2118
2116
2114
2112
2110
2108
2106
2104
2102
2100
2098
2096
2094
2092
2090
2088
2086
2084
2082
2080
2078
2076
2074
2072
2070
2068
2066
2064
2062
2060
2058
2056
2054
2052
2050
2048
2046
2044
2042
2040
2038
2036
2034
2032
2030
2028
2026
2024
2022
2020
2018
2016
2014
2012
2010
2008
2006
2004
2002
2000
1998
1996
1994
1992
1990
1988
1986
1984
1982
1980
1978
1976
1974
1972
1970
1968
1966
1964
1962
1960
1958
1956
1954
1952
1950
1948
1946
1944
1942
1940
1938
1936
1934
1932
1930
1928
1926
1924
1922
1920
1918
1916
1914
1912
1910
1908
1906
1904
1902
1900
1898
1896
1894
1892
1890
1888
1886
1884
1882
1880
1878
1876
1874
1872
1870
1868
1866
1864
1862
1860
1858
1856
1854
1852
1850
1848
1846
1844
1842
1840
1838
1836
1834
1832
1830
1828
1826
1824
1822
1820
1818
1816
1814
1812
1810
1808
1806
1804
1802
1800
1798
1796
1794
1792
1790
1788
1786
1784
1782
1780
1778
1776
1774
1772
1770
1768
1766
1764
1762
1760
1758
1756
1754
1752
1750
1748
1746
1744
1742
1740
1738
1736
1734
1732
1730
1728
1726
1724
1722
1720
1718
1716
1714
1712
1710
1708
1706
1704
1702
1700
1698
1696
1694
1692
1690
1688
1686
1684
1682
1680
1678
1676
1674
1672
1670
1668
1666
1664
1662
1660
1658
1656
1654
1652
1650
1648
1646
1644
1642
1640
1638
1636
1634
1632
1630
1628
1626
1624
1622
1620
1618
1616
1614
1612
1610
1608
1606
1604
1602
1600
1598
1596
1594
1592
1590
1588
1586
1584
1582
1580
1578
1576
1574
1572
1570
1568
1566
1564
1562
1560
1558
1556
1554
1552
1550
1548
1546
1544
1542
1540
1538
1536
1534
1532
1530
1528
1526
1524
1522
1520
1518
1516
1514
1512
1510
1508
1506
1504
1502
1500
1498
1496
1494
1492
1490
1488
1486
1484
1482
1480
1478
1476
1474
1472
1470
1468
1466
1464
1462
1460
1458
1456
1454
1452
1450
1448
1446
1444
1442
1440
1438
1436
1434
1432
1430
1428
1426
1424
1422
1420
1418
1416
1414
1412
1410
1408
1406
1404
1402
1400
1398
1396
1394
1392
1390
1388
1386
1384
1382
1380
1378
1376
1374
1372
1370
1368
1366
1364
1362
1360
1358
1356
1354
1352
1350
1348
1346
1344
1342
1340
1338
1336
1334
1332
1330
1328
1326
1324
1322
1320
1318
1316
1314
1312
1310
1308
1306
1304
1302
1300
1298
1296
1294
1292
1290
1288
1286
1284
1282
1280
1278
1276
1274
1272
1270
1268
1266
1264
1262
1260
1258
1256
1254
1252
1250
1248
1246
1244
1242
1240
1238
1236
1234
1232
1230
1228
1226
1224
1222
1220
1218
1216
1214
1212
1210
1208
1206
1204
1202
1200
1198
1196
1194
1192
1190
1188
1186
1184
1182
1180
1178
1176
1174
1172
1170
1168
1166
1164
1162
1160
1158
1156
1154
1152
1150
1148
1146
1144
1142
1140
1138
1136
1134
1132
1130
1128
1126
1124
1122
1120
1118
1116
1114
1112
1110
1108
1106
1104
1102
1100
1098
1096
1094
1092
1090
1088
1086
1084
1082
1080
1078
1076
1074
1072
1070
1068
1066
1064
1062
1060
1058
1056
1054
1052
1050
1048
1046
1044
1042
1040
1038
1036
1034
1032
1030
1028
1026
1024
1022
1020
1018
1016
1014
1012
1010
1008
1006
1004
1002
1000
998
996
994
992
990
988
986
984
982
980
978
976
974
972
970
968
966
964
962
960
958
956
954
952
950
948
946
944
942
940
938
936
934
932
930
928
926
924
922
920
918
916
914
912
910
908
906
904
902
900
898
896
894
892
890
888
886
884
882
880
878
876
874
872
870
868
866
864
862
860
858
856
854
852
850
848
846
844
842
840
838
836
834
832
830
828
826
824
822
820
818
816
814
812
810
808
806
804
802
800
798
796
794
792
790
788
786
784
782
780
778
776
774
772
770
768
766
764
762
760
758
756
754
752
750
748
746
744
742
740
738
736
734
732
730
728
726
724
722
720
718
716
714
712
710
708
706
704
702
700
698
696
694
692
690
688
686
684
682
680
678
676
674
672
670
668
666
664
662
660
658
656
654
652
650
648
646
644
642
640
638
636
634
632
630
628
626
624
622
620
618
616
614
612
610
608
606
604
602
600
598
596
594
592
590
588
586
584
582
580
578
576
574
572
570
568
566
564
562
560
558
556
554
552
550
548
546
544
542
540
538
536
534
532
530
528
526
524
522
520
518
516
514
512
510
508
506
504
502
500
498
496
494
492
490
488
486
484
482
480
478
476
474
472
470
468
466
464
462
460
458
456
454
452
450
448
446
444
442
440
438
436
434
432
430
428
426
424
422
420
418
416
414
412
410
408
406
404
402
400
398
396
394
392
390
388
386
384
382
380
378
376
374
372
370
368
366
364
362
360
358
356
354
352
350
348
346
344
342
340
338
336
334
332
330
328
326
324
322
320
318
316
314
312
310
308
306
304
302
300
298
296
294
292
290
288
286
284
282
280
278
276
274
272
270
268
266
264
262
260
258
256
254
252
250
248
246
244
242
240
238
236
234
232
230
228
226
224
222
220
218
216
214
212
210
208
206
204
202
200
198
196
194
192
190
188
186
184
182
180
178
176
174
172
170
168
166
164
162
160
158
156
154
152
150
148
146
144
142
140
138
136
134
132
130
128
126
124
122
120
118
116
114
112
110
108
106
104
102
100
98
96
94
92
90
88
86
84
82
80
78
76
74
72
70
68
66
64
62
60
58
56
54
52
50
48
46
44
42
40
38
36
34
32
30
28
26
24
22
20
18
16
14
12
10
8
6
4
2
0
-2
-4
-6
-8
-10
-12
-14
-16
-18
-20
-22
-24
-26
-28
-30
-32
-34
-36
-38
-40
-42
-44
-46
-48
-50
-52
-54
-56
-58
-60
-62
-64
-66
-68
-70
-72
-74
-76
-78
-80



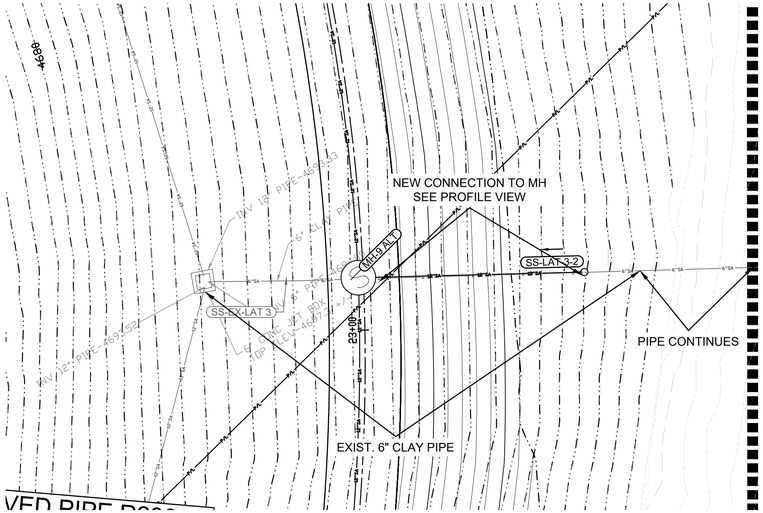

EXIST SEW LAT 3
0+00 TO 0+70

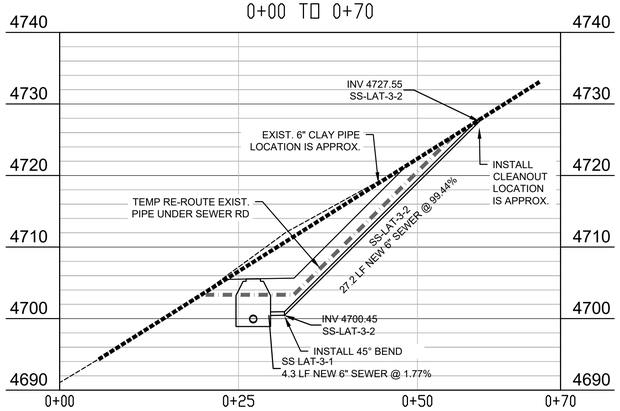

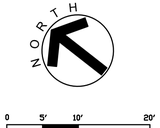

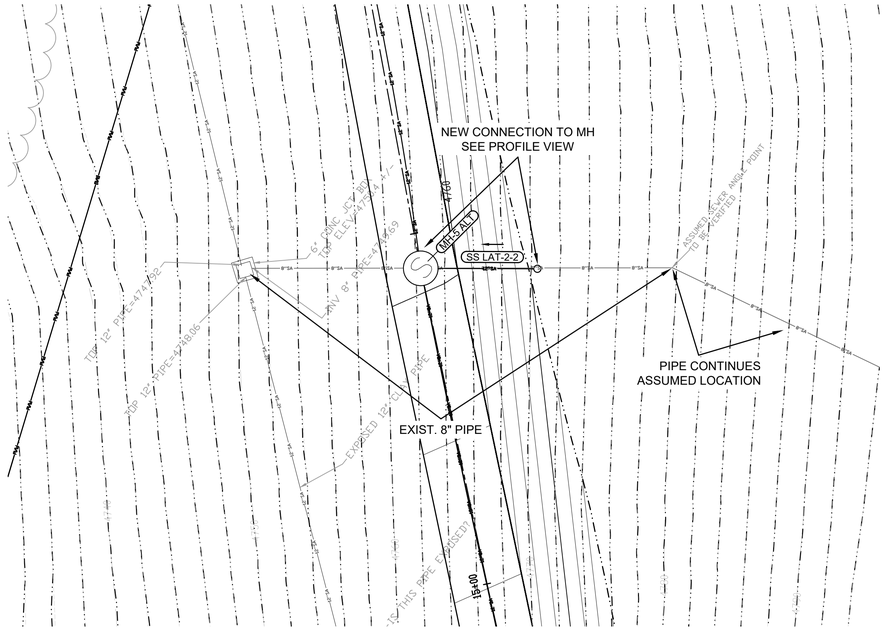

EX SEW LAT 2
0+00 TO 0+75

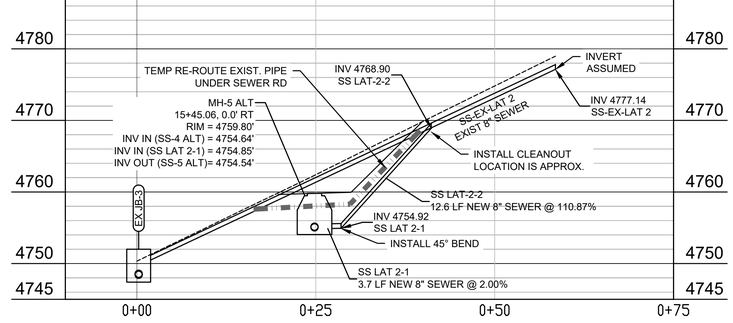

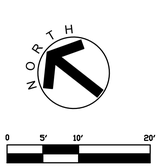

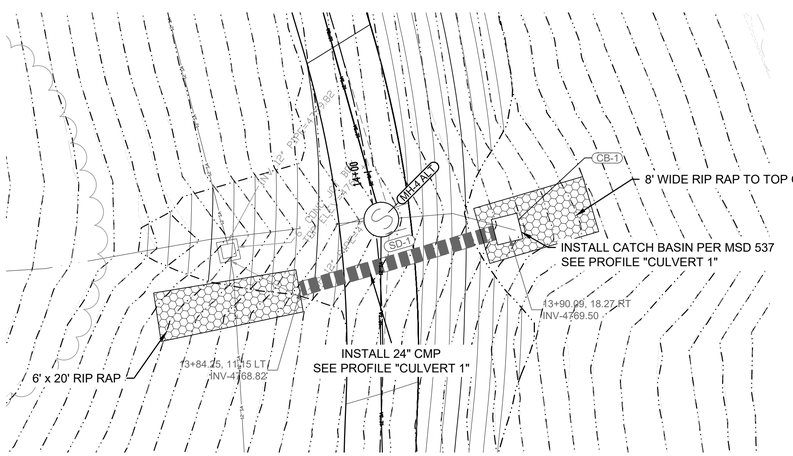

CULVERT 1
0+00 TO 0+75

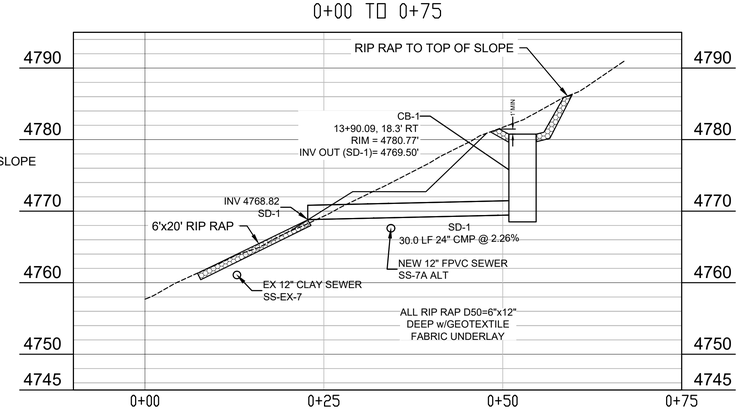

CONSTRUCTION NOTES

1. THE EXISTING SEWER PIPES ARE VERY SHALLOW. EXTREME CAUTION IS REQUIRED TO ENSURE THE PIPES ARE PROTECTED DURING CONSTRUCTION. EXISTING SEWER TO REMAIN OPERATIONAL AT ALL TIMES UNTIL THE NEW SEWER IS ACTIVATED.
2. THE EXISTING LATERAL SEWERS SHALL BE TEMPORARILY RE-ROUTED AS NEEDED DURING CONSTRUCTION UNTIL THE NEW SEWER IS ACTIVATED.
3. WASTE MATERIAL FROM THE SEWER AND ROAD CONSTRUCTION SHALL BE REMOVED FROM PRIVATELY OWNED PROPERTIES.
4. CUT SLOPES STEEPER THAN 2:1 SHOULD BE EVALUATED AND APPROVED BY GEOTECHNICAL ENGINEER.
5. ALL TEMPORARY AND NEW SEWER PIPES AND STRUCTURES SHALL BE INSTALLED PER THE SPECIFICATIONS PROVIDED BY THE SEWER PLANT ENGINEER.
6. NEW EASEMENTS ARE NEEDED FOR BOTH EXISTING AND PROPOSED SEWER ACROSS PRIVATE LAND. TO BE COORDINATED BY THE TOWN.

NO	BY	DATE	REVISIONS	DATE	APP.



PREPARED BY:
DESIGNED BY:
DRAWN BY: NMW
CHECKED BY: KG
SCALE: AS SHOWN
DATE 10/31/25
JOB NO. 19-1101CE

TITLE
ALT SEWER LATERAL PROFILES

JOB
JEROME WWTP
GRADING & UTILITIES PLANS
YAVAPAI COUNTY AZ

PREPARED BY:
SEC Inc.
SOUTHWESTERN ENVIRONMENTAL CONSULTANTS, INC
825 COVE PARKWAY
COTTONWOOD, AZ 86326
928-282-7787

SHEET
C4.5
25 OF 99 SHEETS

JOB NO. 19-1101CE

© 2025, SEC, Inc., All Rights Reserved. This document is protected under the United States Copyright Act. No part may be reproduced in any form or by any means or stored in a database or retrieval system, without the prior written permission of SEC, Inc. These plans/documents have been prepared using technical knowledge that would be applied by other qualified registrants who practice the same profession in the same area and at the same time. Efforts have been made to be as accurate as possible. However, plans/documents could contain unintentional technical inaccuracies, typographical errors or omissions. Users of these plans/documents should understand that it is highly probable that errors and omissions will occur in any plan/document preparation process.

S:\LAND PROJECTS 2004 ENGINEERING\19-1101CE JEROME WWTP\DWG\C3D\PLANS\XBSAN-ALT-19-1101CE.DWG



EXISTING EQUIPMENT AND COMPONENTS

1. BAR SCREEN
2. 2" PVC POTABLE WATERLINE
3. STORAGE TANKS (ABANDONED)
4. PRIMARY SETTLING TANK
5. DOSING TANK A
6. TRICKLING FILTER (TYP.)
7. REED BEDS (TYP.)
8. DOSING TANK B
9. CONSTRUCTED WETLAND CELLS (TYP.)
10. LEVEL ADJUST SUMP (TYP.)
11. CHLORINE CONTACT CHAMBERS

EXISTING SITE PLAN

NORTH

40 20 0 40 80

100% ISSUED FOR BID

NO	BY	DATE	REVISIONS	DATE	APP.

Registered Professional Engineer (Civil) CERTIFICATE NO. 70097 Timothy B. Pierce Signed Arizona U.S.A. Expires 12/31/28

PREPARED BY: PACE
DESIGNED BY: NE
DRAWN BY: DS, WW
CHECKED BY: TP
SCALE: AS NOTED
DATE: NOV 2025
JOB NO. B614

THESE DRAWINGS ARE THE PROPERTY OF P.A.C.E. AND SHALL NOT BE REPRODUCED IN ANY MANNER NOR BE USED FOR CONSTRUCTION UNLESS STAMPED 'ISSUED FOR CONSTRUCTION'.

TITLE
EXISTING SITE PLAN

JOB
TOWN OF JEROME
WASTEWATER
TREATMENT PLANT
YAVAPAI CO. AZ

PREPARED BY:
PACE
Advanced Water Engineering
8723 E. VIA DE VENTURA, SUITE A, SCOTTSDALE, CA 85258
P: (480) 991-3955 | www.pacewater.com
TAYLOR B. PIERCE R.C.E. 70097 DATE

SHEET
M1.0
26 OF 99 SHEETS

JOB NO. B614

W:\B614\Engineering\B614-30sheets\B614- M1.0 EXISTING SITE PLAN.dwg - Tab: SITE PLAN - by neddington on 03/10/26 at 2:04:43 PM



CONSTRUCTION NOTES:

1. INSTALL TEMPORARY 12" BYPASS FOR THE EXISTING SEWER INFLUENT LINE.
2. REMOVE EXISTING BAR SCREEN AND RELOCATE UPSTREAM OF THE EXISTING PRIMARY SETTLING TANK.
3. INSTALL TEMPORARY BAR SCREEN AND 12" SEWER BYPASS LINE TO THE PRIMARY SETTLING TANK.
4. DEMOLISH AND REMOVE THE EXISTING TANK SAND FILTER, TANK CLARIFIER, STORAGE BUILDING, AND STATIC SCREEN.
5. CUT AND CAP EXISTING 2" WATER SERVICE TO THE WWTP.
6. DEMOLISH AND REMOVE THE EXISTING STORAGE SHED.
7. CUT AND CAP PIPE FROM THE PRIMARY SETTLING TANK TO THE EAST REED BED.
8. CUT AND CAP LINE FROM DOSING TANK A TO EAST TRICKLING FILTER.
9. LOCATE, CUT AND CAP LINE FROM SAND FILTER TANK.
10. CUT, CAP AND PROTECT IN PLACE EAST TRICKLING FILTER.
11. CUT AND CAP DRAIN LINE FROM EAST TRICKLING FILTER UPSTREAM OF WEST TRICKLING FILTER LINE TIE-IN LOCATION.
12. REMOVE ALL EXISTING PIPING WITHIN THE EAST REED BED.
13. CUT AND CAP EAST REED BED DRAIN LINE AT THE EXISTING MANHOLE.
14. PROTECT IN PLACE.
15. REMOVE APPROX. 140 LF OF EXISTING FENCE.

NOTES:
1. CONTRACTOR TO PROVIDE A SEQUENCE OF CONSTRUCTION TO ENGINEER FOR REVIEW PRIOR TO CONSTRUCTION. CONTRACTOR SHALL BE RESPONSIBLE FOR ALL MEANS AND METHODS.

DEMOLITION PLAN PH-I

NORTH
40 20 0 40 80

NO	BY	DATE	REVISIONS	DATE	APP.

Registered Professional Engineer (Civil) CERTIFICATE NO. 70097 Taylor B. Pierce Signed 12/31/25 ARIZONA, U.S.A. Expires 12/31/28

PREPARED BY: PACE
DESIGNED BY: NE
DRAWN BY: DS, WW
CHECKED BY: TP
SCALE: AS NOTED
DATE: NOV 2025
JOB NO.: B614

THESE DRAWINGS ARE THE PROPERTY OF P.A.C.E. AND SHALL NOT BE REPRODUCED IN ANY MANNER NOR BE USED FOR CONSTRUCTION UNLESS STAMPED 'ISSUED FOR CONSTRUCTION'.

TITLE: **DEMOLITION PLAN PH-I**

JOB: TOWN OF JEROME
WASTEWATER
TREATMENT PLANT
YAVAPAI CO. AZ

100% ISSUED FOR BID

PREPARED BY: TAYLOR B. PIERCE R.C.E 70097 DATE
PACE
Advanced Water Engineering
8723 E. Via de Commercio, Suite 2-114, Scottsdale, CA 85258
P: (408) 991-3395 | www.pacewater.com

SHEET
M1.1
27 OF 99 SHEETS

JOB NO. B614

W:\B614\Engineering\B614-30\sheets\B614 - M1.1 DEMO PLANS PH-I.dwg - Tab: M1.1 - by reddington on 11/17/25 at 10:25:59 AM



CONSTRUCTION NOTES:

1. REMOVE TEMPORARY BYPASS PIPING FROM THE INFLUENT LINE ONCE FLOW HAS BEEN DIVERTED THROUGH NEW WWTP.
2. DEMOLISH AND REMOVE EXISTING PRIMARY SETTLING TANK. REMOVE ALL ABOVE GRADE PIPING & CAP AND ABANDON IN PLACE ALL BELOW GRADE PIPING.
3. DEMOLISH AND REMOVE EXISTING DOSING TANK A. REMOVE ALL ABOVE GRADE PIPING & CAP AND ABANDON IN PLACE ALL BELOW GRADE PIPING.
4. REMOVE ALL ABOVE GRADE PIPING & CAP AND ABANDON IN PLACE ALL BELOW GRADE PIPING. ABANDON IN PLACE WEST TRICKLING FILTER.
5. CAP AND ABANDON IN PLACE EXISTING SEPTIC TANK. REMOVE ALL ABOVE GRADE PIPING & CAP AND ABANDON IN PLACE ALL BELOW GRADE PIPING.
6. ABANDON IN PLACE EXISTING WEST REED BED. REMOVE ALL ABOVE GRADE PIPING & CAP AND ABANDON IN PLACE ALL BELOW GRADE PIPING.
7. CAP AND ABANDON IN PLACE EXISTING MANHOLE. CUT AND CAP ALL PIPING BELOW GRADE AND ABANDON IN PLACE.
8. CAP AND ABANDON IN PLACE EXISTING DOSING TANK B. REMOVE ALL ABOVE GRADE PIPING & CAP AND ABANDON IN PLACE ALL BELOW GRADE PIPING.
9. ABANDON IN PLACE EXISTING WEST WETLAND CELL. REMOVE ALL ABOVE GRADE PIPING & CAP AND ABANDON IN PLACE ALL BELOW GRADE PIPING. REUSE TRAFFIC BARRIER FOR NEW OVERFLOW BASIN.
10. REMOVE ALL PIPING WITHIN THE THREE EAST WETLAND BASINS & CUT, CAP, AND ABANDON IN PLACE ALL PIPING OUTSIDE THE BASINS.
11. CAP AND ABANDON IN PLACE EAST LEVEL ADJUST SUMPS. CUT, CAP AND ABANDON IN PLACE ALL BELOW GRADE PIPING.
12. CAP AND ABANDON IN PLACE WEST LEVEL ADJUST SUMP. CUT, CAP AND ABANDON IN PLACE ALL BELOW GRADE PIPING.
13. CAP AND ABANDON IN PLACE EXISTING CHLORINE CONTACT CHAMBER. CUT, CAP AND ABANDON IN PLACE ALL BELOW GRADE PIPING.

DEMOLITION PLAN PH-II

NORTH

40 20 0 40 80

100% ISSUED FOR BID

PREPARED BY: TAYLOR B. PIERCE R.C.E 70097 DATE

PACE
Advanced Water Engineering
8723 E. VIA DE COMMERCIO, 1ST FLOOR | SCOTTSDALE, CA 85258
P. (480) 991-3595 | www.paceaztr.com

TITLE: DEMOLITION PLAN PH-II

JOB: TOWN OF JEROME WASTEWATER TREATMENT PLANT — YAVAPAI CO. AZ

NO	BY	DATE	REVISIONS	DATE	APP.

Registered Professional Engineer (Civil) CERTIFICATE NO. 70097 TAYLOR B. PIERCE Signed ARIZONA U.S.A. Expires 12/31/28

PREPARED BY: PACE
DESIGNED BY: NE
DRAWN BY: DS, WW
CHECKED BY: TP
SCALE: AS NOTED
DATE: NOV 2025
JOB NO.: B614

SHEET M1.2
28 OF 99 SHEETS

JOB NO. B614

THESE DRAWINGS ARE THE PROPERTY OF P.A.C.E. AND SHALL NOT BE REPRODUCED IN ANY MANNER NOR BE USED FOR CONSTRUCTION UNLESS STAMPED 'ISSUED FOR CONSTRUCTION'.

W:\B614\Engineering\B614-30sheets\B614 - M1.2 DEMO PLANS PHII.dwg - Tab: M1.2 - by reddington on 03/10/26 at 12:57:22 PM

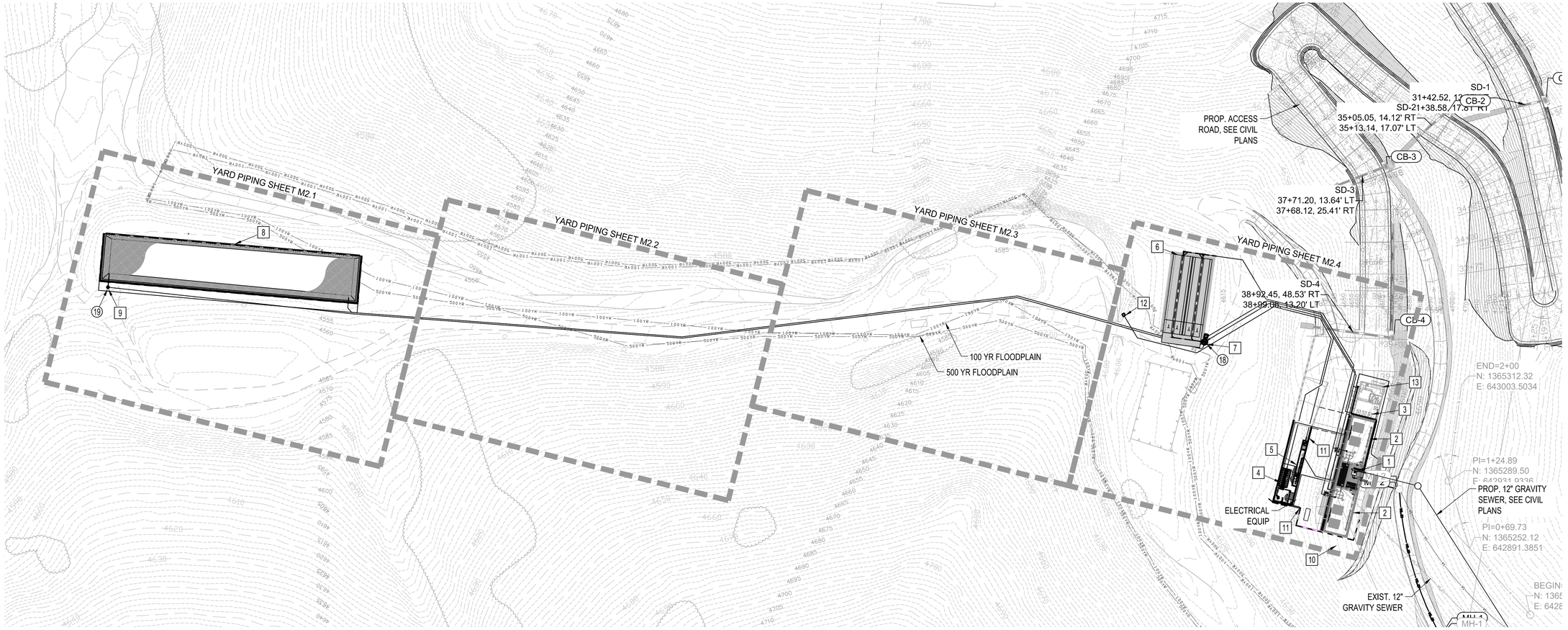

CONSTRUCTION NOTES:

1. HEADWORKS PER SHEET M3.0.
2. SEQUENCING BATCH REACTOR PER SHEET M3.0.
3. BLOWER ROOM PER SHEET M7.0.
4. DEWATERING PAD PER SHEET M5.3.
5. CHLORINE CONTACT CHANNEL PER SHEET M4.0.
6. SLUDGE DRYING BED PER SHEET M5.0.
7. DRYING BED LIFT STATION PER SHEET M5.2.
8. EMERGENCY OVERFLOW BASIN PER SHEET M6.0.
9. PACKAGED OVERFLOW LIFT STATION PER DETAIL A SHEET M8.2.
10. REPLACE 140± LF OF PERIMETER FENCING TO MATCH.
11. RETAINING WALL PER STRUCTURAL SHEET S2.10.
12. PRECAST CONCRETE EFFLUENT SAMPLE BOX PER SHEET M5.0.
13. OPERATIONS ROOM PER SHEET M7.0.

PROPOSED SITE PLAN

NORTH

40 20 0 40 80

100% ISSUED FOR BID

CALL TWO WORKING DAYS BEFORE YOU DIG
602-263-1100
1-800-STAKE-IT
(OUTSIDE MARICOPA COUNTY)

NO	BY	DATE	REVISIONS	DATE	APP.

Registered Professional Engineer (Civil) CERTIFICATE NO. 70097 Taylor B. Pierce Signed 12/31/25 ARIZONA, U.S.A. Expires 12/31/28

THESE DRAWINGS ARE THE PROPERTY OF P.A.C.E. AND SHALL NOT BE REPRODUCED IN ANY MANNER NOR BE USED FOR CONSTRUCTION UNLESS STAMPED 'ISSUED FOR CONSTRUCTION'.

PREPARED BY: PACE
DESIGNED BY: NE
DRAWN BY: DS, WW
CHECKED BY: TP
SCALE: AS NOTED
DATE: NOV 2025
JOB NO.: B614

TITLE: PROPOSED SITE PLAN

JOB: TOWN OF JEROME WASTEWATER TREATMENT PLANT — YAVAPAI CO. AZ

PREPARED BY: TAYLOR B. PIERCE R.C.E. 70097 DATE

PACE
Advanced Water Engineering
CONNECTED WITH A VISION
8123 E. VIA DE COMERCIO, SUITE A, SCOTTSDALE, CA 85258
P: (480) 991-3595 | W: www.pacewater.com

SHEET M2.0
29 OF 99 SHEETS

JOB NO. B614

W:\B614\Engineering\B614-3\Sheets\B614 - M2.0 SITE PLANS.dwg - Tab: SITE PLAN - by redlington on 03/10/26 at 2:18:11 PM

CONSTRUCTION NOTES:

1. INSTALL 2" SCH. 80 PVC PIPE.
2. INSTALL 4" C900 PVC PIPE.
3. INSTALL 4" - 45° D.I. BEND W/ MJ CONNECTIONS W/ THRUST BLOCKS PER DETAIL C SHEET M8.0.
4. REPLACE 10± LF OF PERIMETER FENCING TO MATCH.
5. INSTALL 2" PVC COUPLING.
6. TRENCH AND BACKFILL PER DETAIL D, SHEET M8.1.
7. CONTRACTOR TO PROVIDE FITTINGS AS REQUIRED TO CONNECT TO LIFT STATION DISCHARGE PIPING

EARTHWORK ESTIMATE (UNADJUSTED)

CUT	1,465	Cu. Yd.
FILL	0	Cu. Yd.
NET	1,465	Cu. Yd. <CUT>

CONTRACTOR SHALL VERIFY EARTHWORK QUANTITIES

POINT TABLE			
PNT. #	NORTHING	EASTING	DESCRIPTION
1	1366308.34	642657.44	OF BSN BTM CNR
2	1366131.64	642724.07	OF BSN BTM CNR
3	1366299.09	642632.53	OF BSN BTM CNR
4	1366121.64	642697.12	OF BSN BTM CNR
5	1366295.09	642622.30	LS CTR

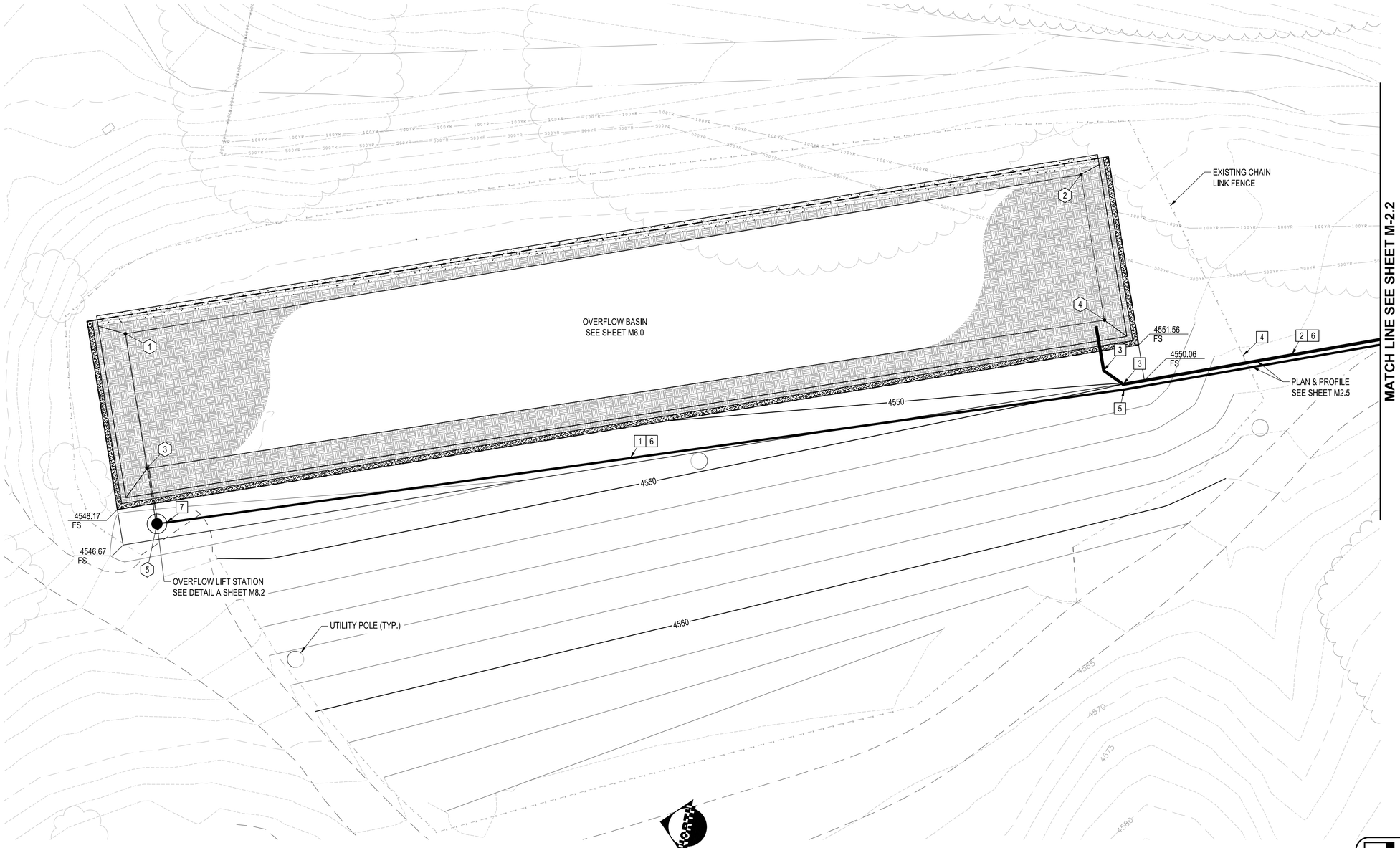

YARD PIPING & GRADING PLAN
SCALE: 1" = 10'

CALL TWO WORKING DAYS BEFORE YOU DIG
602-263-1100
1-800-STAKE-IT
(OUTSIDE MARICOPA COUNTY)

100% ISSUED FOR BID

NO	BY	DATE	REVISIONS	DATE	APP.

Registered Professional Engineer (Civil) CERTIFICATE NO. 70097 TAYLOR B. PIERCE Signed ARIZONA, U.S.A. Expires 12/31/28

THESE DRAWINGS ARE THE PROPERTY OF P.A.C.E. AND SHALL NOT BE REPRODUCED IN ANY MANNER NOR BE USED FOR CONSTRUCTION UNLESS STAMPED 'ISSUED FOR CONSTRUCTION'.

PREPARED BY: PACE
DESIGNED BY: NE
DRAWN BY: DS, WW
CHECKED BY: TP
SCALE: AS NOTED
DATE: NOV 2025
JOB NO.: B614

TITLE: YARD PIPING & GRADING PLAN

JOB: TOWN OF JEROME WASTEWATER TREATMENT PLANT
YAVAPAI CO. AZ

PREPARED BY: TAYLOR B. PIERCE R.C.E 70097 DATE
PACE
Advanced Water Engineering
8723 E. Via de Ventura Suite 110 SCOTTSDALE, CA 85258
P: (480) 991-3595 | www.pacewater.com

SHEET M2.1
30 OF 99 SHEETS

JOB NO. B614

W:\B614 Engineering\B614-30\sheets\B614 - M2.1 YARD PIPING - OLD VERSION RESTORED.dwg - Tab: M2.1 - by reddington on 03/10/26 at 2:03:53 PM

CONSTRUCTION NOTES:

1. INSTALL 2" SCH. 80 PVC PIPE.
2. INSTALL 2" - 11.25° SCH. 80 PVC BEND.
3. INSTALL 4" C900 PVC PIPE.
4. INSTALL 4" - 11.25° D.I. BEND W/ MJ CONNECTIONS W/ THRUST BLOCKS PER DETAIL C SHEET M8.0.
5. TRENCH AND BACKFILL PER DETAIL D, SHEET M8.1.

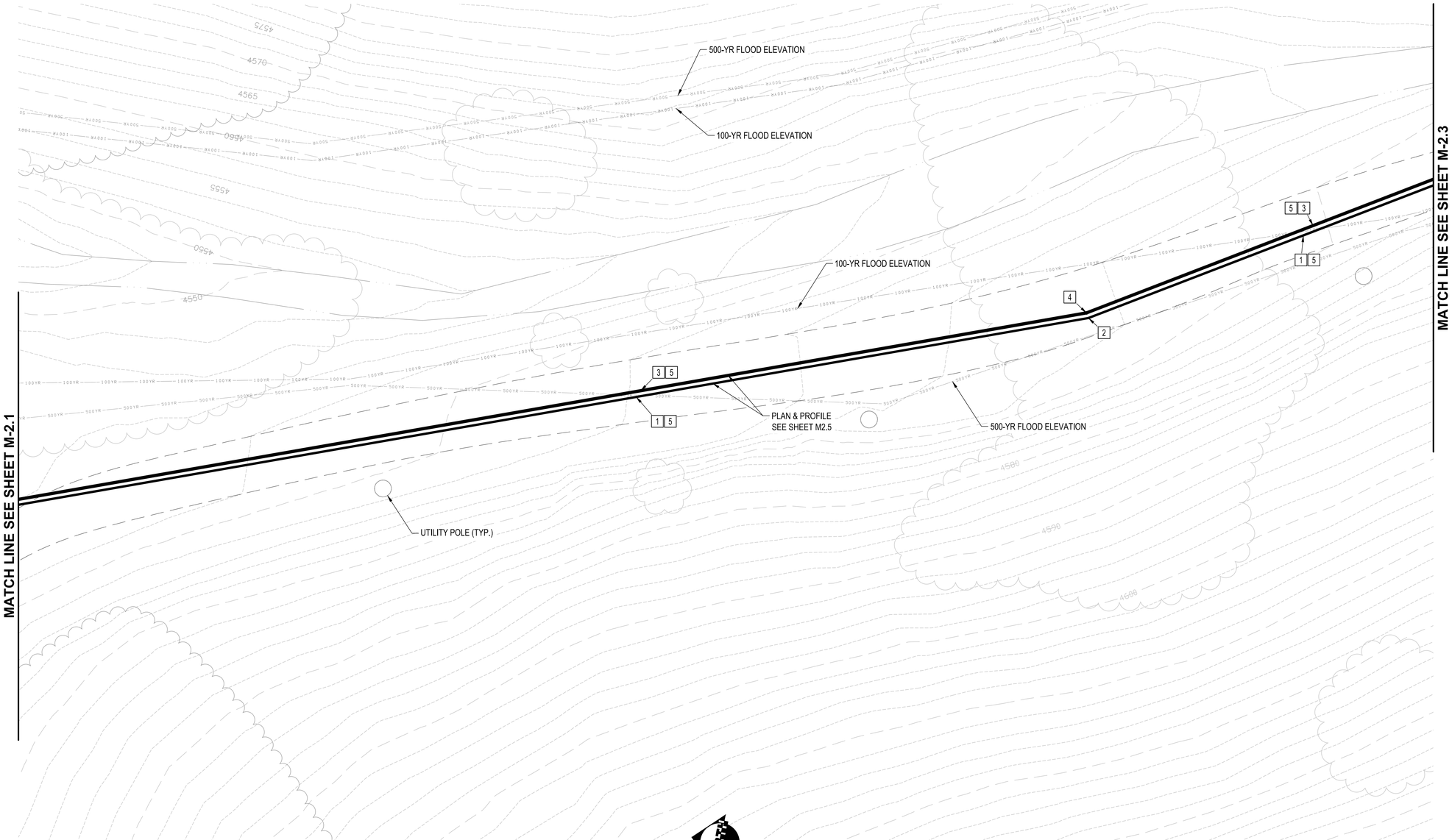

YARD PIPING PLAN
SCALE: 1" = 10'

NORTH
10 5 0 10 20

CALL TWO WORKING DAYS BEFORE YOU DIG
602-263-1100
1-800-STAKE-IT
(OUTSIDE MARICOPA COUNTY)

100% ISSUED FOR BID

NO	BY	DATE	REVISIONS	DATE	APP.

Registered Professional Engineer (Civil)
CERTIFICATE NO. 70097
TAYLOR B. PIERCE
Signed
ARIZONA, U.S.A.
Expires 12/31/28

PREPARED BY: PACE
DESIGNED BY: NE
DRAWN BY: DS, WW
CHECKED BY: TP
SCALE: AS NOTED
DATE: NOV 2025
JOB NO. B614

THESE DRAWINGS ARE THE PROPERTY OF P.A.C.E. AND SHALL NOT BE REPRODUCED IN ANY MANNER NOR BE USED FOR CONSTRUCTION UNLESS STAMPED 'ISSUED FOR CONSTRUCTION'.

TITLE
YARD PIPING PLAN

JOB
TOWN OF JEROME
WASTEWATER
TREATMENT PLANT
YAVAPAI CO. AZ

PREPARED BY:
PACE
Advanced Water Engineering
8723 E. Via de Commercio, Suite 100 | SCOTTSDALE, CA 85258
P: (480) 991-3595 | www.pacewater.com
TAYLOR B. PIERCE R.C.E 70097 DATE

SHEET
M2.2
31 OF 99 SHEETS

JOB NO. B614

W:\B614\Engineering\B614-30\sheets\B614 - M2.1 YARD PIPING - OLD VERSION RESTORED.dwg - Tab: M2.2 - by reddington on 03/10/26 at 2:05:53 PM

CONSTRUCTION NOTES:

1. INSTALL 2" SCH. 80 PVC PIPE.
2. INSTALL 2" - 22.5° SCH. 80 PVC BEND.
3. INSTALL 4" D.I. PIPE.
4. INSTALL 4" C900 PVC PIPE.
5. INSTALL 4" - 22.5° D.I. BEND W/ MJ FITTINGS W/ THRUST BLOCKS PER DETAIL C SHEET M8.0.
6. INSTALL CLEANOUT PER DETAIL I SHEET M8.3.
7. INSTALL PVC TO DIP TRANSITION COUPLING, ROMAC OR EQUAL.
8. TRENCH AND BACKFILL PER DETAIL D, SHEET M8.1.

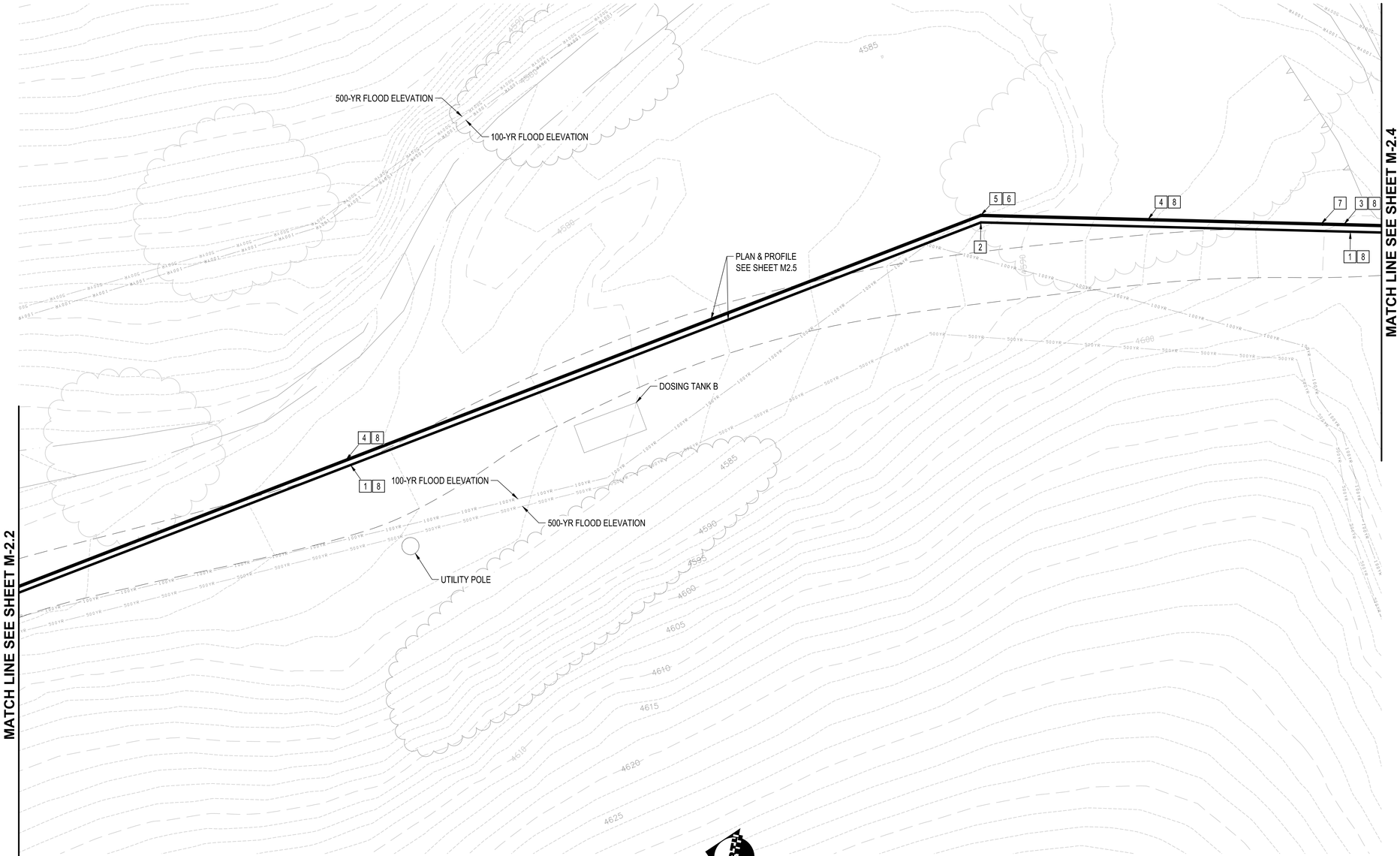

YARD PIPING PLAN
SCALE: 1" = 10'

NORTH
10 5 0 10 20

NO	BY	DATE	REVISIONS	DATE	APP.

THESE DRAWINGS ARE THE PROPERTY OF P.A.C.E. AND SHALL NOT BE REPRODUCED IN ANY MANNER NOR BE USED FOR CONSTRUCTION UNLESS STAMPED 'ISSUED FOR CONSTRUCTION'.

Registered Professional Engineer (Civil) CERTIFICATE NO. 70097 TAYLOR B. PIERCE Signed ARIZONA, U.S.A. Expires 12/31/28

PREPARED BY:	PACE
DESIGNED BY:	NE
DRAWN BY:	DS, WW
CHECKED BY:	TP
SCALE:	AS NOTED
DATE	NOV 2025
JOB NO.	B614

TITLE: YARD PIPING

JOB: TOWN OF JEROME WASTEWATER TREATMENT PLANT
YAVAPAI CO. AZ

100% ISSUED FOR BID

PREPARED BY: TAYLOR B. PIERCE R.C.E. 70097 DATE
PACE Advanced Water Engineering
8723 E. VIA de COMMERCIO, BUILDING 3, SCOTTSDALE, CA 85258
P: (480) 991-3595 | www.pacewater.com

SHEET M2.3
32 OF 99 SHEETS

JOB NO. B614

W:\B614\Engineering\B614-3\Sheets\B614 - M2.1 YARD PIPING - OLD VERSION RESTORED.dwg - Tab: M2.3 - by reddington on 03/10/26 at 2:03:53 PM

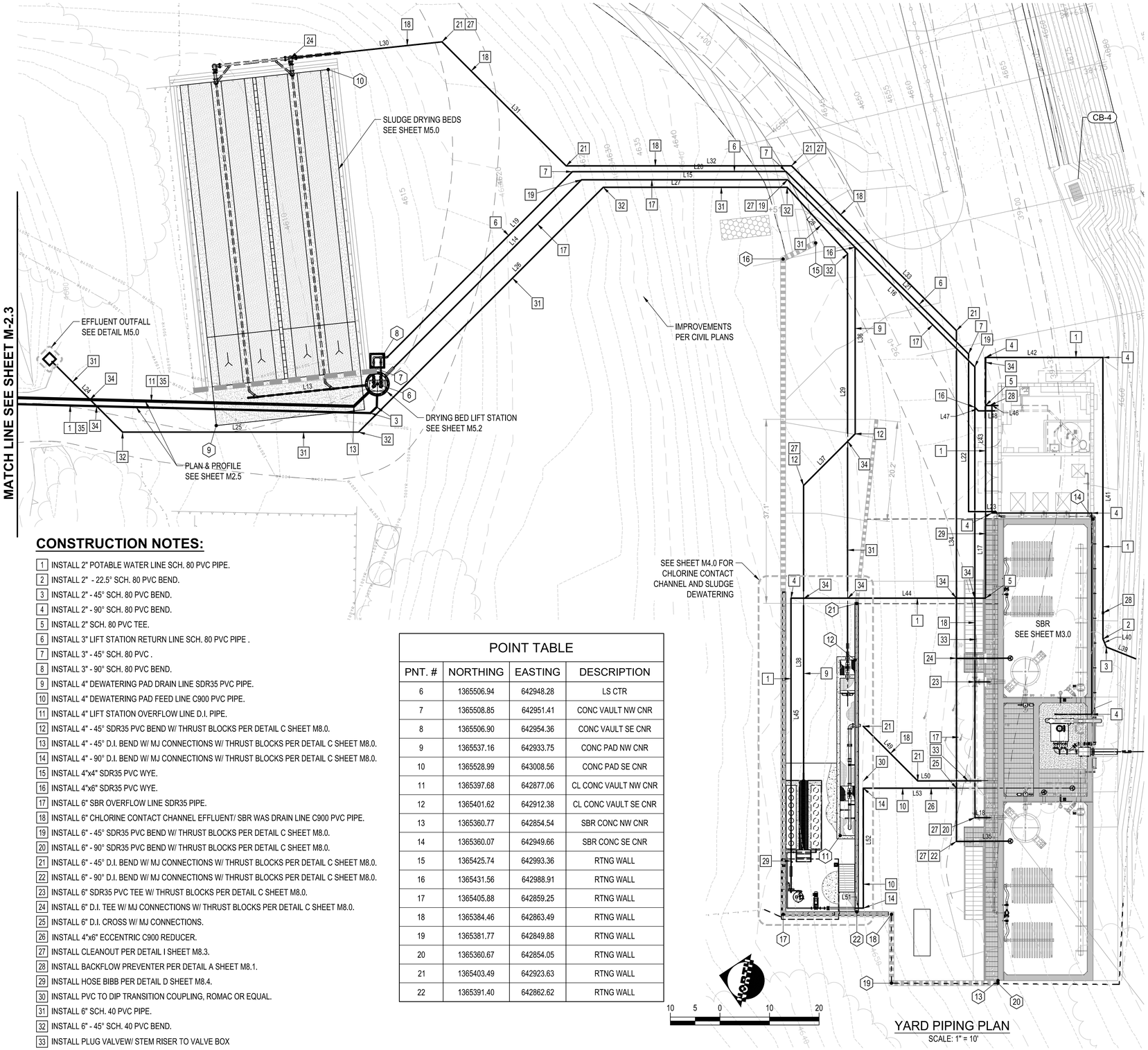

CONSTRUCTION NOTES:

1. INSTALL 2" POTABLE WATER LINE SCH. 80 PVC PIPE.
2. INSTALL 2" - 22.5° SCH. 80 PVC BEND.
3. INSTALL 2" - 45° SCH. 80 PVC BEND.
4. INSTALL 2" - 90° SCH. 80 PVC BEND.
5. INSTALL 2" SCH. 80 PVC TEE.
6. INSTALL 3" LIFT STATION RETURN LINE SCH. 80 PVC PIPE .
7. INSTALL 3" - 45° SCH. 80 PVC .
8. INSTALL 3" - 90° SCH. 80 PVC BEND.
9. INSTALL 4" DEWATERING PAD DRAIN LINE SDR35 PVC PIPE.
10. INSTALL 4" DEWATERING PAD FEED LINE C900 PVC PIPE.
11. INSTALL 4" LIFT STATION OVERFLOW LINE D.I. PIPE.
12. INSTALL 4" - 45° SDR35 PVC BEND W/ THRUST BLOCKS PER DETAIL C SHEET M8.0.
13. INSTALL 4" - 45° D.I. BEND W/ MJ CONNECTIONS W/ THRUST BLOCKS PER DETAIL C SHEET M8.0.
14. INSTALL 4" - 90° D.I. BEND W/ MJ CONNECTIONS W/ THRUST BLOCKS PER DETAIL C SHEET M8.0.
15. INSTALL 4"x4" SDR35 PVC WYE.
16. INSTALL 4"x6" SDR35 PVC WYE.
17. INSTALL 6" SBR OVERFLOW LINE SDR35 PIPE.
18. INSTALL 6" CHLORINE CONTACT CHANNEL EFFLUENT/ SBR WAS DRAIN LINE C900 PVC PIPE.
19. INSTALL 6" - 45° SDR35 PVC BEND W/ THRUST BLOCKS PER DETAIL C SHEET M8.0.
20. INSTALL 6" - 90° SDR35 PVC BEND W/ THRUST BLOCKS PER DETAIL C SHEET M8.0.
21. INSTALL 6" - 45° D.I. BEND W/ MJ CONNECTIONS W/ THRUST BLOCKS PER DETAIL C SHEET M8.0.
22. INSTALL 6" - 90° D.I. BEND W/ MJ CONNECTIONS W/ THRUST BLOCKS PER DETAIL C SHEET M8.0.
23. INSTALL 6" SDR35 PVC TEE W/ THRUST BLOCKS PER DETAIL C SHEET M8.0.
24. INSTALL 6" D.I. TEE W/ MJ CONNECTIONS W/ THRUST BLOCKS PER DETAIL C SHEET M8.0.
25. INSTALL 6" D.I. CROSS W/ MJ CONNECTIONS.
26. INSTALL 4"x6" ECCENTRIC C900 REDUCER.
27. INSTALL CLEANOUT PER DETAIL I SHEET M8.3.
28. INSTALL BACKFLOW PREVENTER PER DETAIL A SHEET M8.1.
29. INSTALL HOSE BIBB PER DETAIL D SHEET M8.4.
30. INSTALL PVC TO DIP TRANSITION COUPLING, ROMAC OR EQUAL.
31. INSTALL 6" SCH. 40 PVC PIPE.
32. INSTALL 6" - 45° SCH. 40 PVC BEND.
33. INSTALL PLUG VALVEW/ STEM RISER TO VALVE BOX
34. POTABLE WATER & SEWER SEPERATION PER DETAIL F SHEET M8.3
35. TRENCH AND BACKFILL PER DETAIL D, SHEET M8.1.

POINT TABLE

PNT. #	NORTHING	EASTING	DESCRIPTION
6	1365506.94	642948.28	LS CTR
7	1365508.85	642951.41	CONC VAULT NW CNR
8	1365506.90	642954.36	CONC VAULT SE CNR
9	1365537.16	642933.75	CONC PAD NW CNR
10	1365528.99	643008.56	CONC PAD SE CNR
11	1365397.68	642877.06	CL CONC VAULT NW CNR
12	1365401.62	642912.38	CL CONC VAULT SE CNR
13	1365360.77	642854.54	SBR CONC NW CNR
14	1365360.07	642949.66	SBR CONC SE CNR
15	1365425.74	642993.36	RTNG WALL
16	1365431.56	642988.91	RTNG WALL
17	1365405.88	642859.25	RTNG WALL
18	1365384.46	642863.49	RTNG WALL
19	1365381.77	642849.88	RTNG WALL
20	1365360.67	642854.05	RTNG WALL
21	1365403.49	642923.63	RTNG WALL
22	1365391.40	642862.62	RTNG WALL

LINE DATA

LINE #	DISTANCE	BEARING	START POINT	END POINT
L13	22.48'	S17°18'33"E	N 1365530.33, E 642940.99	N 1365508.86, E 642947.68
L14	56.23'	S56°12'23"E	N 1365505.83, E 642949.94	N 1365474.55, E 642996.68
L15	41.55'	S11°12'16"E	N 1365474.55, E 642996.68	N 1365433.79, E 643004.75
L16	53.40'	S33°46'31"W	N 1365433.79, E 643004.75	N 1365389.40, E 642975.07
L17	90.91'	S78°47'08"W	N 1365389.40, E 642975.07	N 1365371.72, E 642885.90
L18	3.06'	S11°12'16"E	N 1365371.72, E 642885.90	N 1365368.72, E 642886.49
L19	52.66'	S56°14'49"E	N 1365505.95, E 642954.14	N 1365476.69, E 642997.93
L20	43.07'	S11°14'49"E	N 1365476.69, E 642997.93	N 1365434.44, E 643006.33
L21	52.08'	S33°46'38"W	N 1365434.44, E 643006.33	N 1365391.15, E 642977.37
L22	31.78'	S78°47'08"W	N 1365391.15, E 642977.37	N 1365384.97, E 642946.20
L23	5.63'	S11°12'52"E	N 1365384.97, E 642946.20	N 1365379.45, E 642947.29
L24	19.82'	S33°47'52"W	N 1365571.96, E 642939.80	N 1365555.49, E 642928.78
L25	47.61'	S11°12'09"E	N 1365555.49, E 642928.78	N 1365508.79, E 642938.03
L26	69.82'	S56°12'21"E	N 1365508.79, E 642938.03	N 1365469.95, E 642996.05
L27	37.08'	S11°11'56"E	N 1365469.95, E 642996.05	N 1365433.58, E 643003.25
L28	18.14'	S36°24'57"W	N 1365433.58, E 643003.25	N 1365418.98, E 642992.48
L29	91.27'	S78°48'35"W	N 1365418.98, E 642992.48	N 1365401.27, E 642902.95
L30	30.72'	S17°17'44"E	N 1365536.89, E 643009.37	N 1365507.56, E 643018.50
L31	35.41'	S33°46'20"W	N 1365507.56, E 643018.50	N 1365478.13, E 642998.82
L32	45.45'	S11°13'40"E	N 1365478.13, E 642998.82	N 1365433.55, E 643007.67
L33	47.02'	S33°47'44"W	N 1365433.55, E 643007.67	N 1365394.47, E 642981.52
L34	103.00'	S78°47'25"W	N 1365394.47, E 642981.52	N 1365374.45, E 642880.48
L35	10.88'	S11°24'18"E	N 1365374.45, E 642880.48	N 1365363.79, E 642882.63
L36	37.61'	N78°47'08"E	N 1365410.46, E 642957.14	N 1365417.77, E 642994.04
L37	14.74'	S56°12'52"E	N 1365418.65, E 642944.90	N 1365410.46, E 642957.14
L38	59.50'	N78°47'08"E	N 1365407.08, E 642886.53	N 1365418.65, E 642944.90
L39	6.37'	S10°40'27"W	N 1365352.41, E 642924.80	N 1365346.15, E 642923.62
L40	1.74'	S55°40'27"W	N 1365353.39, E 642926.23	N 1365352.41, E 642924.80
L41	56.80'	S78°47'44"W	N 1365364.43, E 642981.96	N 1365353.39, E 642926.23
L42	23.67'	S11°12'16"E	N 1365387.65, E 642977.36	N 1365364.43, E 642981.96
L43	48.55'	N78°47'44"E	N 1365378.21, E 642929.73	N 1365387.65, E 642977.36
L44	39.25'	S11°12'16"E	N 1365416.71, E 642922.10	N 1365378.21, E 642929.73
L45	59.28'	N78°47'44"E	N 1365405.19, E 642863.95	N 1365416.71, E 642922.10
L46	2.50'	N11°12'16"W	N 1365383.31, E 642968.33	N 1365385.76, E 642967.84
L47	1.00'	N33°47'44"E	N 1365386.98, E 642966.52	N 1365387.82, E 642967.07
L48	3.25'	N11°11'39"W	N 1365383.80, E 642967.15	N 1365386.98, E 642966.52
L49	15.57'	S33°47'44"W	N 1365397.42, E 642899.59	N 1365384.48, E 642890.93
L50	14.13'	S11°20'19"E	N 1365384.48, E 642890.93	N 1365370.63, E 642893.71
L51	1.67'	S11°12'52"E	N 1365391.90, E 642863.29	N 1365390.26, E 642863.62
L52	24.20'	N78°47'08"E	N 1365390.26, E 642863.62	N 1365394.97, E 642887.36
L53	42.17'	S11°12'24"E	N 1365394.97, E 642887.36	N 1365353.60, E 642895.55

NO	BY	DATE	REVISIONS	DATE	APP.

Registered Professional Engineer (Civil)
CERTIFICATE NO.
Timothy R. Pace
Signed
ARIZONA, U.S.A.
Expires 12/31/28

THESE DRAWINGS ARE THE PROPERTY OF P.A.C.E. AND SHALL NOT BE REPRODUCED IN ANY MANNER NOR BE USED FOR CONSTRUCTION UNLESS STAMPED 'ISSUED FOR CONSTRUCTION'.

PREPARED BY: PACE
DESIGNED BY: NE
DRAWN BY: DS, WW
CHECKED BY: TP
SCALE: AS NOTED
DATE: NOV 2025
JOB NO.: B614

TITLE: YARD PIPING

JOB: TOWN OF JEROME WASTEWATER TREATMENT PLANT — YAVAPAI CO. AZ

100% ISSUED FOR BID

PREPARED BY: TAYLOR B. PIERCE

PACE
Advanced Water Engineering
ARIZONA | CALIFORNIA | NEVADA | UTAH
8723 E. Via de Commercio, Suite 104, Scottsdale, AZ 85258
P: (480) 991-3595 | www.pacewater.com
R.C.E 70097

DATE

CALL TWO WORKING DAYS BEFORE YOU DIG
602-263-1100
1-800-STAKE-IT
(OUTSIDE MARICOPA COUNTY)

SHEET M2.4
33 OF 99 SHEETS

JOB NO. B614

W:\B614-Engineering\B614-3\sheets\B614 - M2.1 YARD PIPING - OLD VERSION RESTORED.dwg - Tab: M2.4 - by reddington on 03/10/26 at 2:03:53 PM

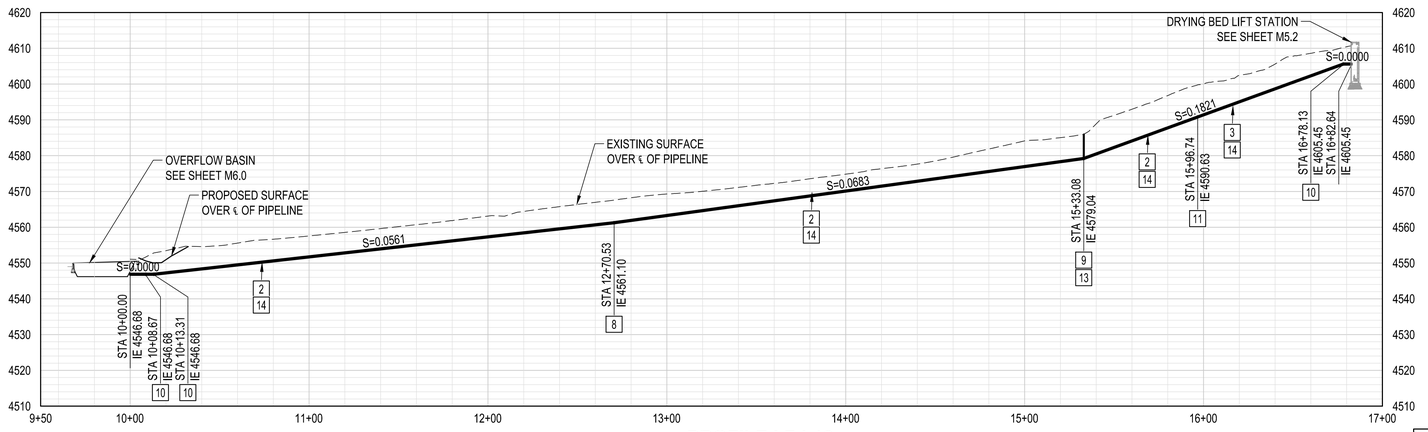

PROFILE L7-L12

SCALE: HORZ: 1" = 40'
VERT: 1" = 20'

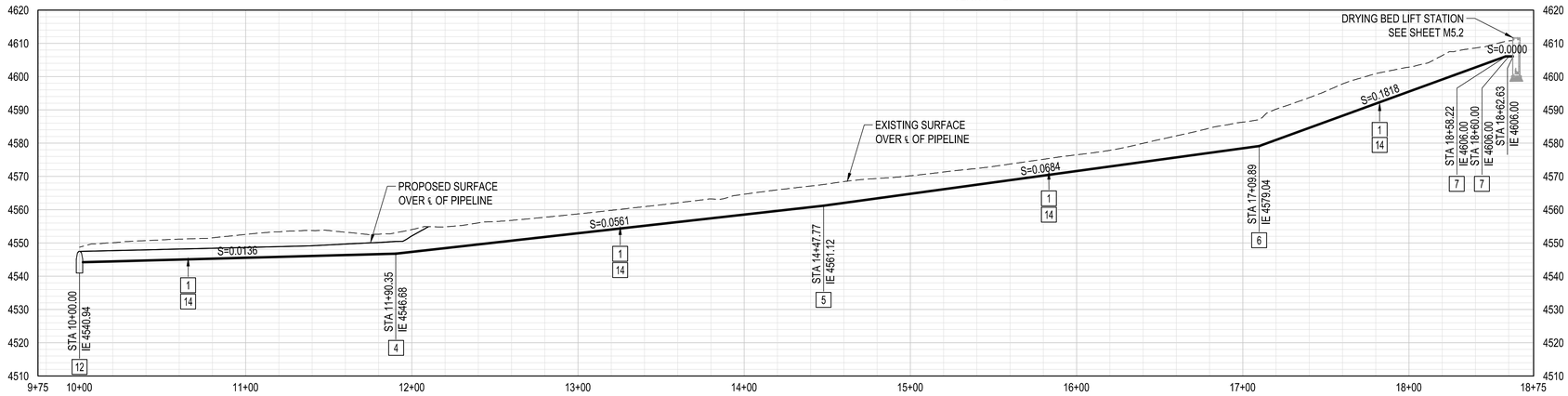

PROFILE L1-L6

SCALE: HORZ: 1" = 40'
VERT: 1" = 20'

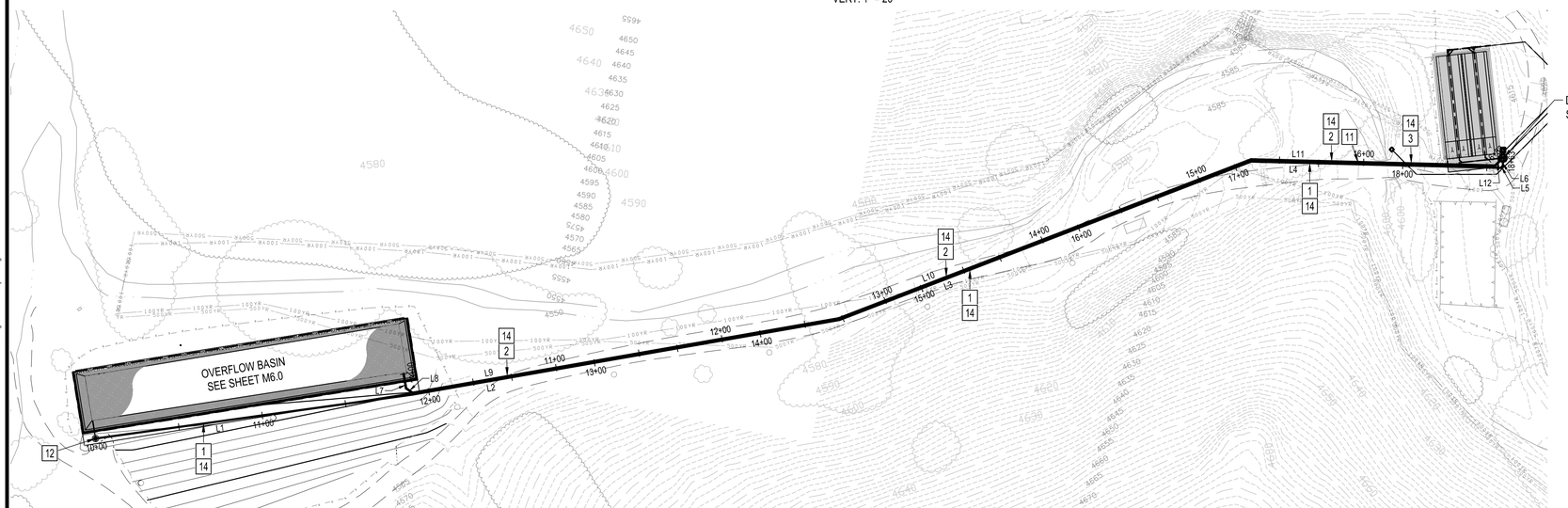

PLAN

SCALE: 1" = 40'

CONSTRUCTION NOTES:

1. INSTALL 2" SCH. 80 PVC PIPE.
2. INSTALL 4" C900 PVC PIPE.
3. INSTALL 4" D.I. PIPE.
4. INSTALL 2" PVC COUPLING.
5. INSTALL 2" - 11.25° SCH. 80 PVC BEND.
6. INSTALL 2" - 22.5° SCH. 80 PVC BEND.
7. INSTALL 2" - 45° SCH. 80 PVC BEND.
8. INSTALL 4" - 11.25° D.I. BEND W/ MJ CONNECTIONS W/ THRUST BLOCKS PER DETAIL C SHEET M8.0.
9. INSTALL 4" - 22.5° D.I. BEND W/ MJ CONNECTIONS W/ THRUST BLOCKS PER DETAIL C SHEET M8.0.
10. INSTALL 4" - 45° D.I. BEND W/ MJ CONNECTIONS W/ THRUST BLOCKS PER DETAIL C SHEET M8.0.
11. INSTALL PVC TO DIP TRANSITION COUPLING, ROMAC OR EQUAL.
12. INSTALL OVERFLOW LIFT STATION PER DETAIL A, SHEET M8.2.
13. INSTALL CLEANOUT PER DETAIL I SHEET M8.3.
14. TRENCH AND BACKFILL PER DETAIL D, SHEET M8.1.

LINE DATA

LINE #	DISTANCE	BEARING	START POINT	END POINT
L1	190.35'	S19°06'20"E	N 1366295.09, E 642622.30	N 1366115.23, E 642684.60
L2	257.42'	S21°06'20"E	N 1366115.23, E 642684.60	N 1365875.07, E 642777.30
L3	262.12'	S32°14'38"E	N 1365875.07, E 642777.30	N 1365653.38, E 642917.15
L4	148.33'	S9°44'37"E	N 1365653.38, E 642917.15	N 1365507.19, E 642942.25
L5	1.78'	S54°44'37"E	N 1365507.19, E 642942.25	N 1365506.16, E 642943.70
L6	2.63'	N80°21'09"E	N 1365506.16, E 642943.70	N 1365506.60, E 642946.29
L7	8.67'	S69°03'53"W	N 1366122.94, E 642695.54	N 1366119.84, E 642687.44
L8	4.64'	S23°54'58"W	N 1366119.84, E 642687.44	N 1366115.60, E 642685.56
L9	257.22'	S21°06'20"E	N 1366115.60, E 642685.56	N 1365875.63, E 642778.18
L10	262.55'	S32°17'02"E	N 1365875.63, E 642778.18	N 1365653.67, E 642918.41
L11	145.05'	S9°44'32"E	N 1365653.67, E 642918.41	N 1365510.71, E 642942.95
L12	4.51'	S54°44'04"E	N 1365510.71, E 642942.95	N 1365508.11, E 642946.64

NO	BY	DATE	REVISIONS	DATE	APP.

Professional Engineer (Civil)
CERTIFICATE NO.
Registered
Signed
ARIZONA, U.S.A.
Expires 12/31/28

PREPARED BY: PACE
DESIGNED BY: NE
DRAWN BY: DS, WW
CHECKED BY: TP
SCALE: AS NOTED
DATE: NOV 2025
JOB NO. B614

TITLE: PLAN & PROFILE

THESE DRAWINGS ARE THE PROPERTY OF P.A.C.E. AND SHALL NOT BE REPRODUCED IN ANY MANNER NOR BE USED FOR CONSTRUCTION UNLESS STAMPED 'ISSUED FOR CONSTRUCTION'.

100% ISSUED FOR BID

JOB: TOWN OF JEROME WASTEWATER TREATMENT PLANT — YAVAPAI CO. AZ

PREPARED BY: TAYLOR B. PIERCE
PACE Advanced Water Engineering
6723 E. VIA CONSUELO, SCOTTSDALE, AZ 85258
P: (480) 991-3595 | www.pacewater.com
R.C.E 70097 DATE

SHEET M2.5
34 OF 99 SHEETS

JOB NO. B614

NORTH
40 20 0 40 80

CALL TWO WORKING DAYS BEFORE YOU DIG
602-263-1100
1-800-STAKE-IT
(OUTSIDE MARICOPA COUNTY)

W:\B614\Engineering\B614-3\sheets\B614 - M2.1 YARD PIPING - OLD VERSION RESTORED.dwg - Tab: M2.5 - by reddington on 03/10/26 at 2:03:53 PM

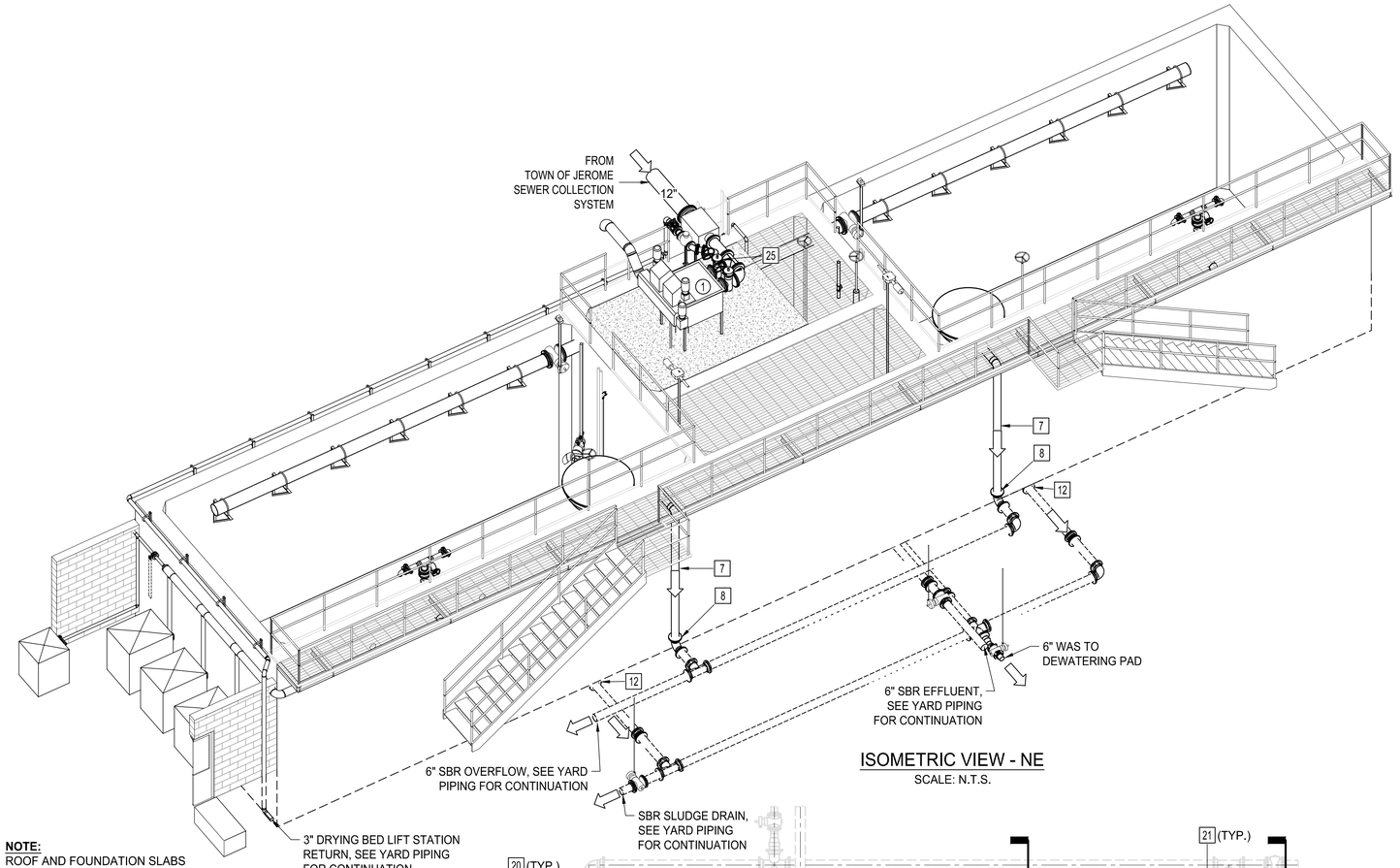

ISOMETRIC VIEW - NE

SCALE: N.T.S.

NOTE:
ROOF AND FOUNDATION SLABS
NOT SHOWN FOR CLARITY.

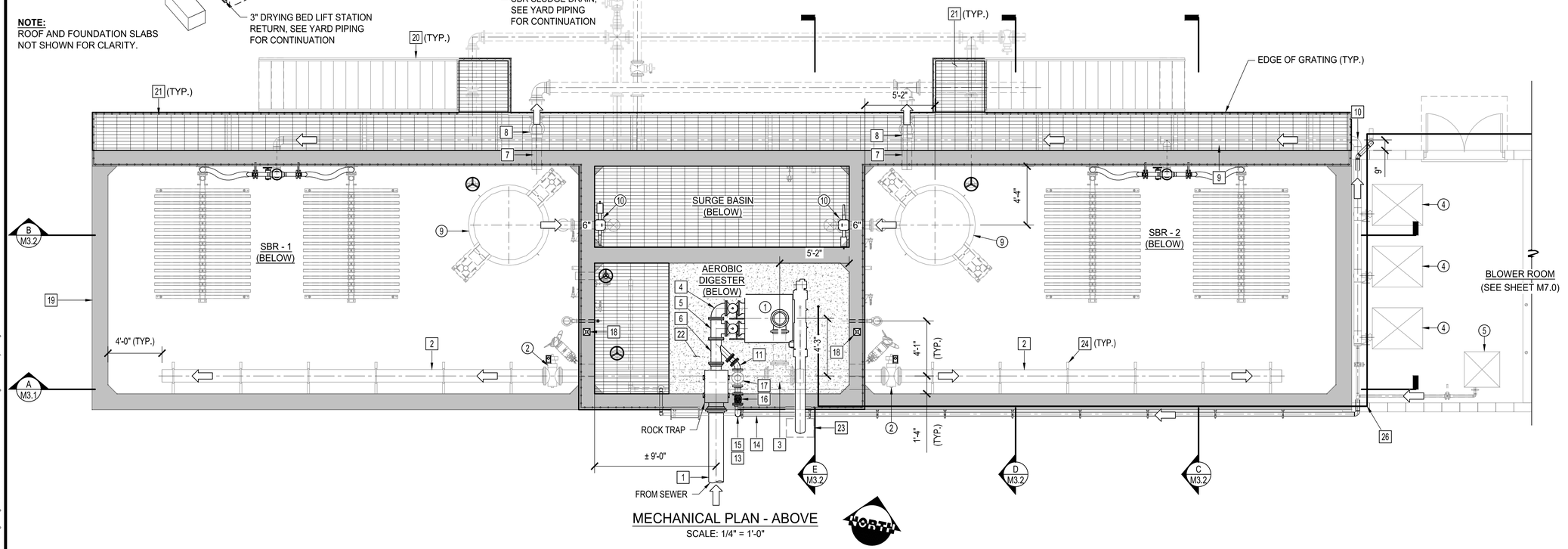

MECHANICAL PLAN - ABOVE

SCALE: 1/4" = 1'-0"

CONSTRUCTION NOTES:

1. INSTALL 12" D.I. PIPE (FLG'D).
2. INSTALL 10" D.I. PIPE (FLG'D).
3. INSTALL 10" D.I. TEE (FLG'D).
4. INSTALL 8" - 90° D.I. BEND (FLG'D).
5. INSTALL 8" D.I. TEE (FLG'D).
6. INSTALL 8"x4" D.I. REDUCING WYE (FLG'D).
7. INSTALL 6" SDR35 PVC PIPE.
8. INSTALL 6" - 90° SDR35 PVC BEND (MJ).
9. INSTALL 6" SCH. 10 CARBON STEEL PIPE.
10. INSTALL 6" - 90° SCH. 10 CARBON STEEL BEND.
11. INSTALL 4" - 45° D.I. BEND (FLG'D).
12. INSTALL 6" - 90° D.I. BEND (MJ).
13. INSTALL 4"x 3" D.I. REDUCER (FLG'D).
14. INSTALL 3" SCH. 80 PVC PIPE.
15. INSTALL 4" - 90° SCH. 80 PVC BEND.
16. INSTALL 4" PVC PLUG VALVE.
17. INSTALL 4" SCH. 80 PVC CHECK VALVE.
18. INSTALL DAVIT CRANE BASE (APPROX. LOCATION).
19. SBR STRUCTURE (SEE STRUCTURAL).
20. STAIRS & RAILING PER MANUFACTURER.
21. GRATING PER MANUFACTURER.
22. CONCRETE SLAB PER STRUCTURAL.
23. WASTE BIN (BY OTHERS).
24. INSTALL PIPE SUPPORTS PER DETAIL A SHT M8.5
25. INSTALL 8" PLUG VALVE, FLG'D.
26. INSTALL 2" SCH. 80 PVC POTABLE WATER

NO	BY	DATE	REVISIONS	DATE	APP.

Registered Professional Engineer (Civil)
CERTIFICATE NO. 70097
Timothy B. Pierce
Signed
ARIZONA, U.S.A.
Expires 12/31/28

PREPARED BY: PACE
DESIGNED BY: NE
DRAWN BY: DS, WW
CHECKED BY: TP
SCALE: AS NOTED
DATE: NOV 2025
JOB NO. B614

THESE DRAWINGS ARE THE PROPERTY OF P.A.C.E. AND SHALL NOT BE REPRODUCED IN ANY MANNER NOR BE USED FOR CONSTRUCTION UNLESS STAMPED 'ISSUED FOR CONSTRUCTION'.

TITLE
SBR MECHANICAL PLAN

JOB
TOWN OF JEROME
WASTEWATER
TREATMENT PLANT
YAVAPAI CO. AZ

100% ISSUED FOR BID

PREPARED BY:
PACE
Advanced Water Engineering
8723 E. VIA DE COMMERCIO, BLDG. 3, SCOTTSDALE, CA 85258
P: (480) 991-3595 | www.pacewater.com
TAYLOR B. PIERCE R.C.E. 70097 DATE

SHEET
M3.0
35 OF 99 SHEETS

JOB NO. B614

W:\B614\Engineering\B614-3\Sheets\B614 - M3.0 MECHANICAL PLAN.dwg - Tab: M3.0 - by neddington on 02/19/26 at 9:31:42 AM

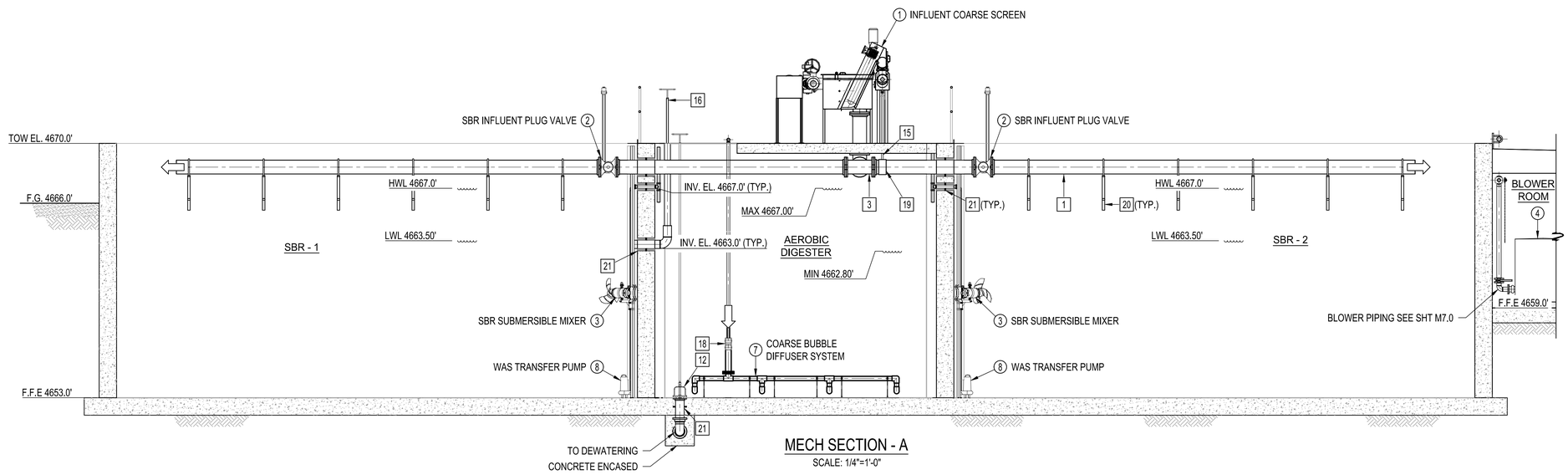

MECH SECTION - A

SCALE: 1/4"=1'-0"

CONSTRUCTION NOTES:

1. INSTALL 10" INFLUENT D.I. PIPE (FLG'D).
2. INSTALL 10" - 90° D.I. BEND (FLG'D).
3. INSTALL 10" D.I. TEE (FLG'D).
4. INSTALL 6" x 4" PVC REDUCER.
5. INSTALL 6" SDR35 PVC PIPE.
6. INSTALL 6" - 90° SDR35 PVC BEND (MJ).
7. INSTALL 6" C900 PVC PIPE.
8. INSTALL 6" - 90° D.I. BEND (MJ).
9. INSTALL 6" C900 PVC CROSS (MJ).
10. INSTALL 6" C900 PVC TEE (MJ).
11. INSTALL 3" SCH. 80 PVC PIPE.
12. INSTALL MUD VALVE w/ STEM RISER (SIZE PER PLAN).
13. SBR STRUCTURE (SEE S2.0).
14. INSTALL 2' x 2' SUMP PER STRUCTURAL PLANS.
15. INSTALL 1" DRAIN LINE FROM SCREEN.
16. INSTALL 6" TELESCOPING VALVE W/ HANDWHEEL.
17. INSTALL 6" BUTTERFLY VALVE W/ ACTUATOR (VENDOR PROVIDED).
18. INSTALL 2"x4" SS TO PVC CONCENTRIC REDUCER (SEE SECTION - A)
19. INSTALL TAP PER PLAN.
20. INSTALL PIPE SUPPORTS PER DETAIL A ON SHEET M8.5.
21. PIPE PENETRATION PER DETAIL G ON SHEET M8.4
22. INSTALL 6" PLUG VALVE.
23. INSTALL 4" PLUG VALVE.
24. INSTALL 6" SCH. 10 CARBON STEEL 90 DEG BEND.
25. INSTALL 6" SCH. 10 CARBON STEEL TEE.
26. INSTALL 6" SCH. 10 CARBON STEEL PIPE.

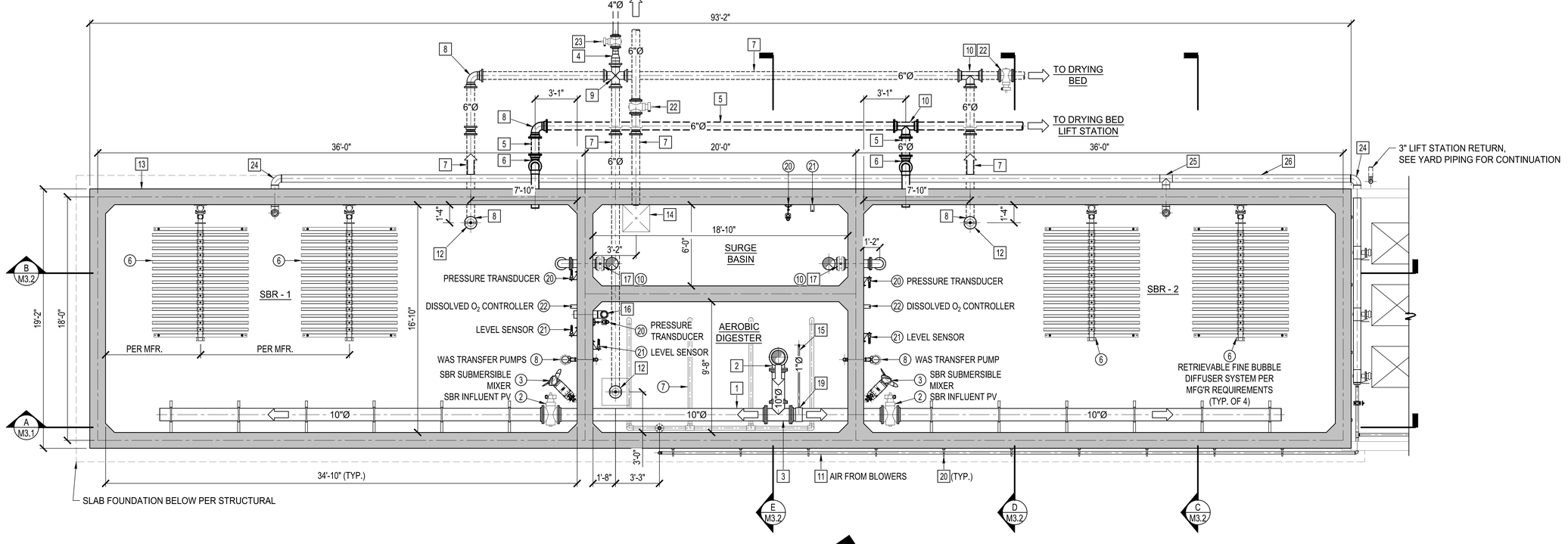

MECHANICAL PLAN - BELOW

SCALE: 1/4" = 1'-0"

NORTH

100% ISSUED FOR BID

PREPARED BY: TAYLOR B. PIERCE

PACE Advanced Water Engineering
8723 E. Via de Ventura, Suite F-110, Scottsdale, CA 85258
P: (480) 991-3995 | www.pacewater.com
R.C.E 70097 DATE

PREPARED BY:	PACE
DESIGNED BY:	NE
DRAWN BY:	DS, WW
CHECKED BY:	TP
SCALE:	AS NOTED
DATE	NOV 2025
JOB NO.	B614

NO	BY	DATE	REVISIONS	DATE	APP.

Registered Professional Engineer (Civil) CERTIFICATE NO. 70097 Timothy Paul Pierce Signed ARIZONA, U.S.A. Expires 12/31/28

THESE DRAWINGS ARE THE PROPERTY OF P.A.C.E. AND SHALL NOT BE REPRODUCED IN ANY MANNER NOR BE USED FOR CONSTRUCTION UNLESS STAMPED 'ISSUED FOR CONSTRUCTION'.

TITLE: SBR MECHANICAL PLAN

JOB: TOWN OF JEROME
WASTEWATER
TREATMENT PLANT
YAVAPAI CO. AZ

SHEET M3.1
36 OF 99 SHEETS

JOB NO. B614

W:\B614\Engineering\B614-3D\sheets\B614 - M3.0 MECHANICAL PLAN.dwg - Tab: M3.1 - by reddington on 02/19/26 at 9:31:42 AM

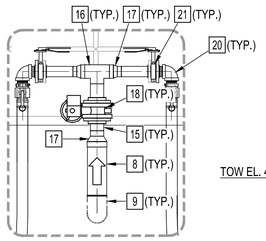

DETAIL - A

SCALE: 1/2"=1'-0"

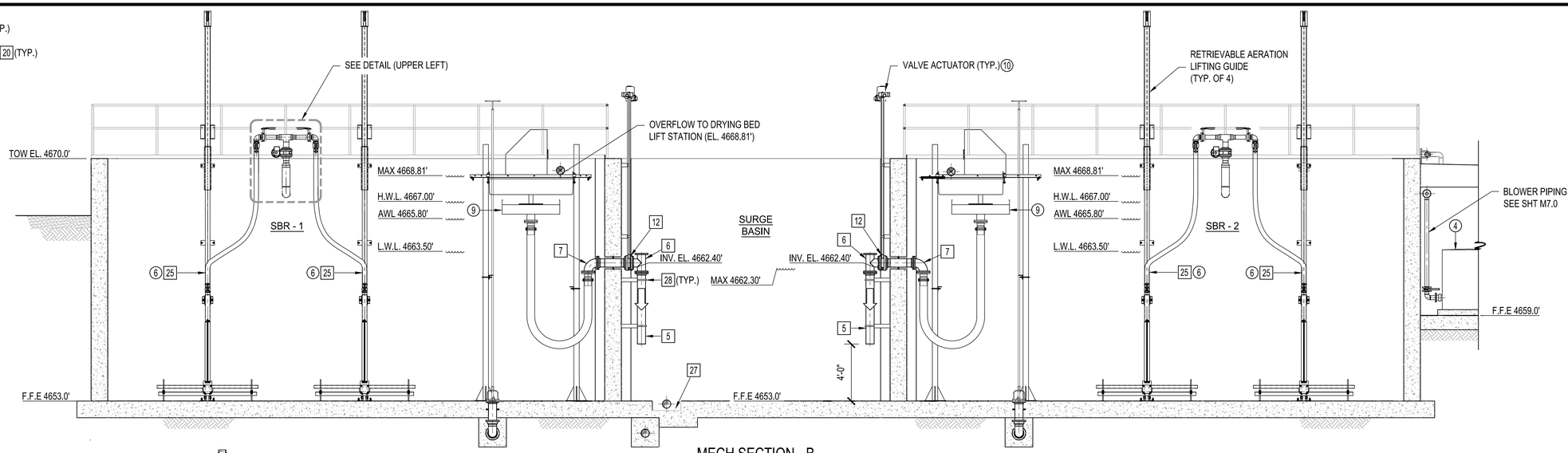

MECH SECTION - B

SCALE: 1/4"=1'-0"

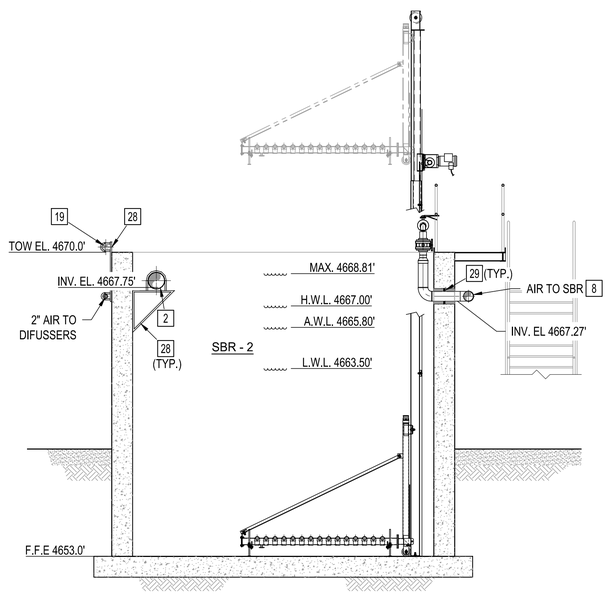

MECH SECTION - C

SCALE: 1/4"=1'-0"

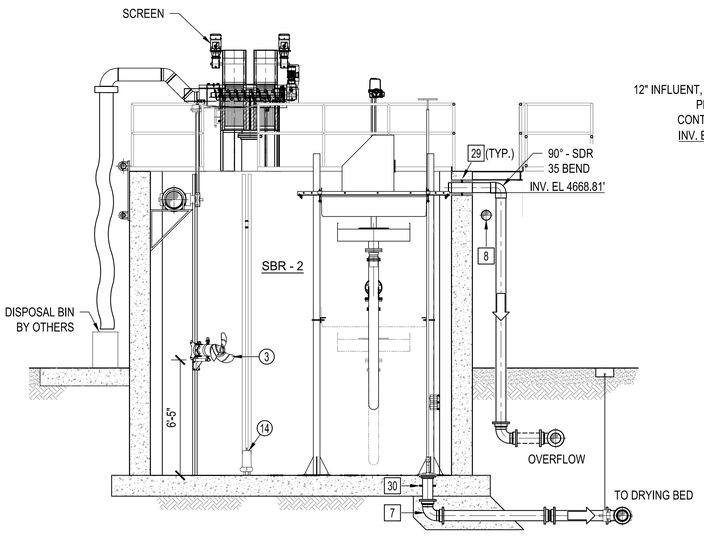

MECH SECTION - D

SCALE: 1/4"=1'-0"

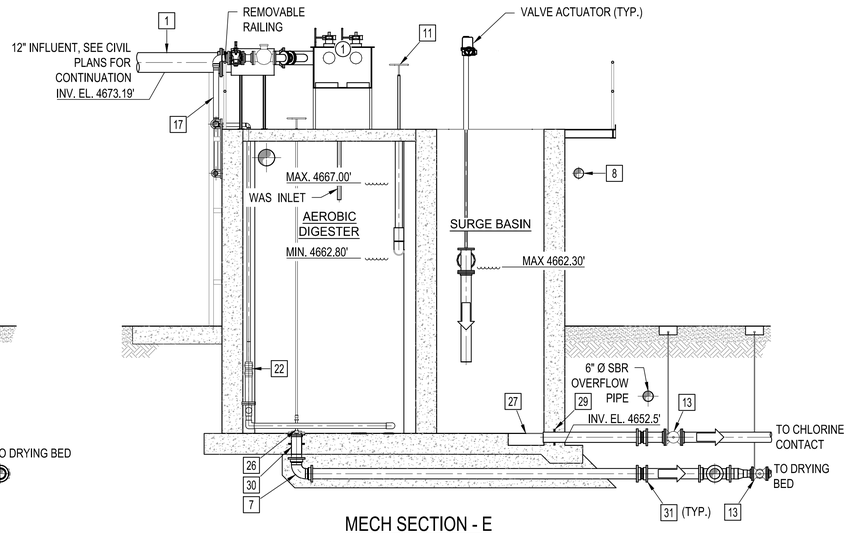

MECH SECTION - E

SCALE: 1/4"=1'-0"

CONSTRUCTION NOTES:

1. INSTALL12" D.I. PIPE (FLG'D).
2. INSTALL 10" INFLUENT D.I. PIPE (FLG'D).
3. INSTALL 10" - 90° D.I. BEND (FLG'D).
4. INSTALL 10" D.I. TEE (FLG'D).
5. INSTALL 6" D.I. PIPE (FLG'D).
6. INSTALL 6" D.I. TEE (FLG'D)
7. INSTALL 6" - 90° D.I. BEND (FLG'D).
8. INSTALL 6" SCH. 10 CARBON STEEL PIPE.
9. INSTALL 6" - 90° CARBON STEEL BEND.
10. INSTALL 6" - 90° CARBON STEEL BEND (FLG'D).
11. INSTALL 6" TELESCOPING VALVE W/ HANDWHEEL.
12. INSTALL 6" BUTTERFLY VALVE W/ ACTUATOR PER SPECIFICATIONS.
13. INSTALL BURRIED-SERVICE 6" PLUG VALVE WITH VALVE CAN AND NUT EXTENSION.
14. INSTALL 4" D.I. PIPE (FLG'D).
15. INSTALL 4" SCH. 10 CARBON STEEL PIPE.
16. INSTALL 4" SCH. 10 CARBON STEEL TEE.
17. INSTALL 4" x 3" SCH. 10 CARBON STEEL CONCENTRIC REDUCER.
18. INSTALL 4" ELECTRICALLY ACTUATED BUTTERFLY VALVE (VENDOR PROVIDED)
19. INSTALL 3" SCH. 80 PVC PIPE.
20. INSTALL 3" - 90° CARBON STEEL BEND (GROOVED).
21. INSTALL 3" BUTTERFLY VALVE PER SPECIFICATIONS.
22. INSTALL 2"x4" SS TO PVC CONCENTRIC REDUCER (SEE SECTION - A)
23. INSTALL 2" SCH. 10 CARBON STEEL PIPE.
24. INSTALL 2" SCH. 10 WELDED CARBON STEEL 90° BEND.
25. INSTALL RETRIEVABLE DIFFUSER ASSEMBLY w/ FLEXIBLE HOSE.
26. INSTALL MUD VALVE w/ EXTENSION PER PLAN.
27. INSTALL 2'x2' SUMP PER STRUCTURAL PLANS.
28. INSTALL PIPE SUPPORTS PER DETAIL A ON SHEET M8.5.
29. INSTALL PIPE PENETRATION PER DETAIL G SHEET M8.4.
30. INSTALL PIPE PENETRATION PER DETAIL F SHEET M8.3.
31. INSTALL DEFLECTION COUPLING.

NO	BY	DATE	REVISIONS	DATE	APP.

Registered Professional Engineer (Civil) CERTIFICATE NO. 70097 TAYLOR B. PIERCE Signed ARIZONA, U.S.A. Expires 12/31/28

THESE DRAWINGS ARE THE PROPERTY OF P.A.C.E. AND SHALL NOT BE REPRODUCED IN ANY MANNER NOR BE USED FOR CONSTRUCTION UNLESS STAMPED 'ISSUED FOR CONSTRUCTION'.

PREPARED BY: PACE
DESIGNED BY: NE
DRAWN BY: DS, WW
CHECKED BY: TP
SCALE: AS NOTED
DATE: NOV 2025
JOB NO.: B614

TITLE: **SBR MECHANICAL SECTIONS**

JOB: TOWN OF JEROME WASTEWATER TREATMENT PLANT — YAVAPAI CO. AZ

100% ISSUED FOR BID

PREPARED BY: TAYLOR B. PIERCE R.C.E 70097 DATE

PACE
Advanced Water Engineering
8723 E. Via de Ventura, Suite 250 | SCOTTSDALE, CA 85258
P: (480) 991-3995 | www.pacewater.com

SHEET **M3.2**
37 OF 99 SHEETS

JOB NO. B614

W:\B614\Engineering\B614-30sheets\B614 - M3.2 MECHANICAL SECTIONS.dwg - Tab: M3.2 - by raddington on 11/17/25 at 2:34:34 PM

CONSTRUCTION NOTES:

1. INSTALL CONCRETE CHLORINE CONTACT CHANNEL PER STRUCTURAL SHT S1.5.
2. INSTALL TABLET EROSION CHLORINATION EQUIPMENT.
3. INSTALL TABLET EROSION DE-CHLORINATION EQUIPMENT.
4. INSTALL SOLID METAL GRATING WALKWAY PER SPECIFICATION 05 53 00.
5. INSTALL UPWARD WEIR GATE PER SPECIFICATION 40 0513.53.
6. INSTALL 6" FLOW METER.
7. INSTALL 6" ACTUATED BUTTERFLY VALVE.
8. INSTALL 3' x 3' CAST IN PLACE BOX & TRAFFIC RATED COVER.
9. INSTALL 6" D.I. PIPE.
10. INSTALL 6" - 90° D.I. BEND.
11. INSTALL 6" - 90° SCH. 40 PVC BEND.
12. INSTALL PIPE SUPPORTS PER DETAIL A SHEET M8.5.
13. INSTALL PVC FLANGE ADAPTER.
14. INSTALL 6" SCH. 40 PVC PIPE.
15. INSTALL 4" ELECTRICALLY ACTUATED PLUG VALVE.
16. INSTALL DEWATERING FEED PUMP.
17. INSTALL DRY POLYMER MAKE-DOWN AND FEED UNIT.
18. INSTALL POLYMER METERING PUMP.
19. INSTALL BAGGER SYSTEM CONTROL PANEL.
20. INSTALL 2" X 1" PVC REDUCING BUSHING.
21. INSTALL 2" SCH. 80 PVC TEE.
22. INSTALL 2" - 90° SCH. 80 PVC BEND.
23. INSTALL PVC CAP.
24. INSTALL 4" X 2" DI REDUCER.
25. INSTALL SHADE STRUCTURE (PER STRUCTURAL SHT S2.10).
26. INSTALL 30" ALUMINUM STEP-UP STAIRCASE.
27. INSTALL METAL GRATING WALKWAY PER SPECIFICATION 05 53 00.
28. INSTALL PIPE PENETRATION PER DETAIL G, SHEET M8.4.

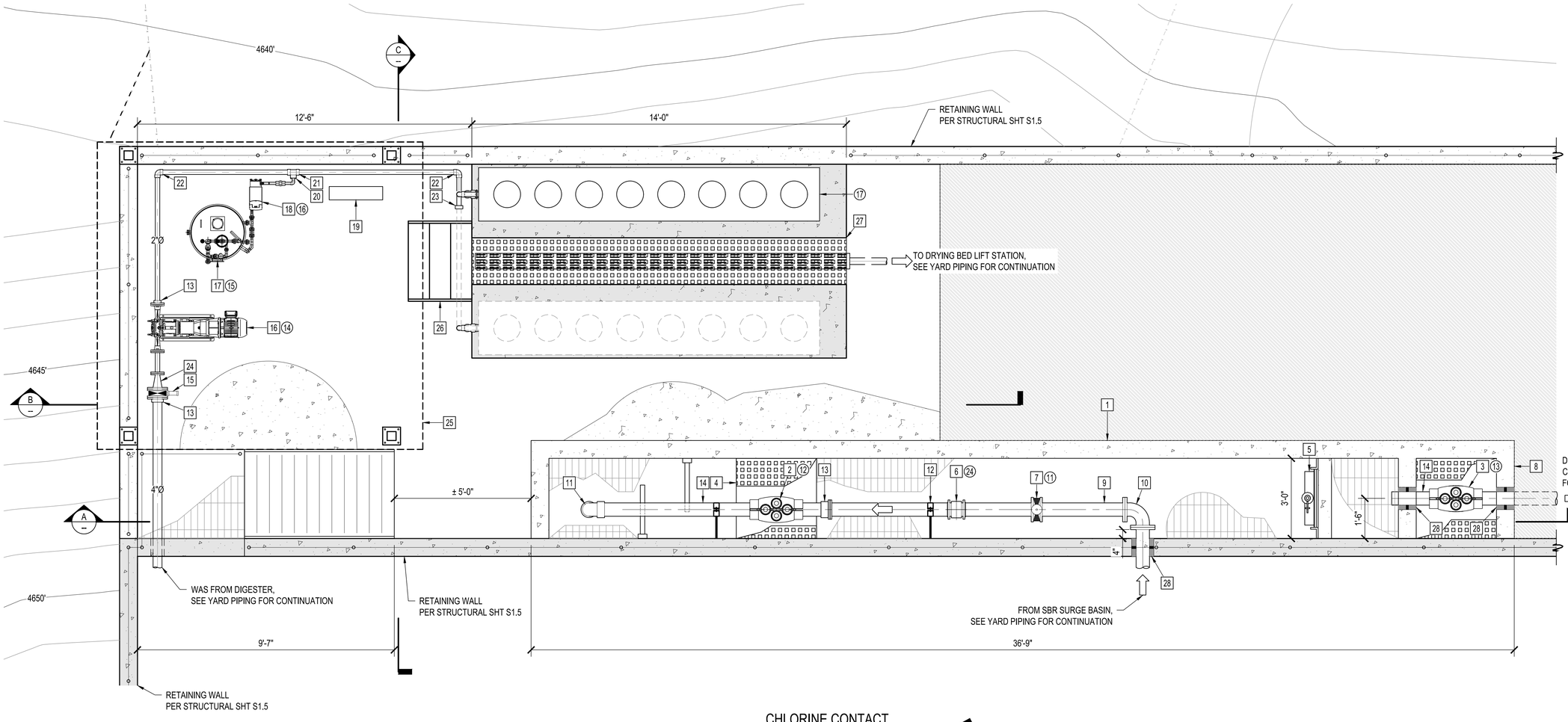

CHLORINE CONTACT
CHANNEL PLAN
SCALE: 1/2"=1'-0"

NORTH

NO	BY	DATE	REVISIONS	DATE	APP.

Registered Professional Engineer (Civil) CERTIFICATE NO. 70097 Timothy B. Pierce Signed ARIZONA, U.S.A. Expires 12/31/28

PREPARED BY: PACE
DESIGNED BY: NE
DRAWN BY: DS, WW
CHECKED BY: TP
SCALE: AS NOTED
DATE: NOV 2025
JOB NO.: B614

THESE DRAWINGS ARE THE PROPERTY OF P.A.C.E. AND SHALL NOT BE REPRODUCED IN ANY MANNER NOR BE USED FOR CONSTRUCTION UNLESS STAMPED 'ISSUED FOR CONSTRUCTION'.

TITLE: **DEWATERING & CCC MECH PLAN**

JOB: TOWN OF JEROME
WASTEWATER
TREATMENT PLANT
YAVAPAI CO. AZ

100% ISSUED FOR BID

PREPARED BY:
PACE
Advanced Water Engineering
8723 E. VIA DE VENTURA, SUITE 290 | SCOTTSDALE, CA 85258
P: (480) 991-3995 | www.paceaztec.com
TAYLOR B. PIERCE R.C.E 70097 DATE

SHEET
M4.0
38 OF 99 SHEETS

JOB NO. B614

W:\B614\Engineering\B614-30sheets\B614 - M4.0 CCC MECH PLAN AND SECTIONS.dwg - Tab: PLAN VIEW - by reddington on 03/02/26 at 8:58:43 AM

CONSTRUCTION NOTES:

1. INSTALL CONCRETE CHLORINE CONTACT CHANNEL PER STRUCTURAL SHT S1.5.
2. INSTALL TABLET EROSION CHLORINATION EQUIPMENT.
3. INSTALL TABLET EROSION DE-CHLORINATION EQUIPMENT.
4. INSTALL SOLID METAL GRATING WALKWAY PER SPECIFICATION 05 53 00.
5. INSTALL UPWARD WEIR GATE PER SPECIFICATION 40 0513.53.
6. INSTALL 6" FLOW METER.
7. INSTALL 6" ACTUATED BUTTERFLY VALVE.
8. GROUT FILL & SLOPE TO INVERT.
9. INSTALL 6" D.I. PIPE.
10. INSTALL 6" - 90° D.I. BEND.
11. INSTALL PIPE SUPPORTS PER DETAIL A SHEET M8.5.
12. INSTALL 6" - 90° SCH. 40 PVC BEND.
13. INSTALL PVC FLANGE ADAPTER
14. INSTALL 6" SCH. 40 PVC PIPE.
15. INSTALL PIPE PENETRATION PER DETAIL G SHEET M8.4.

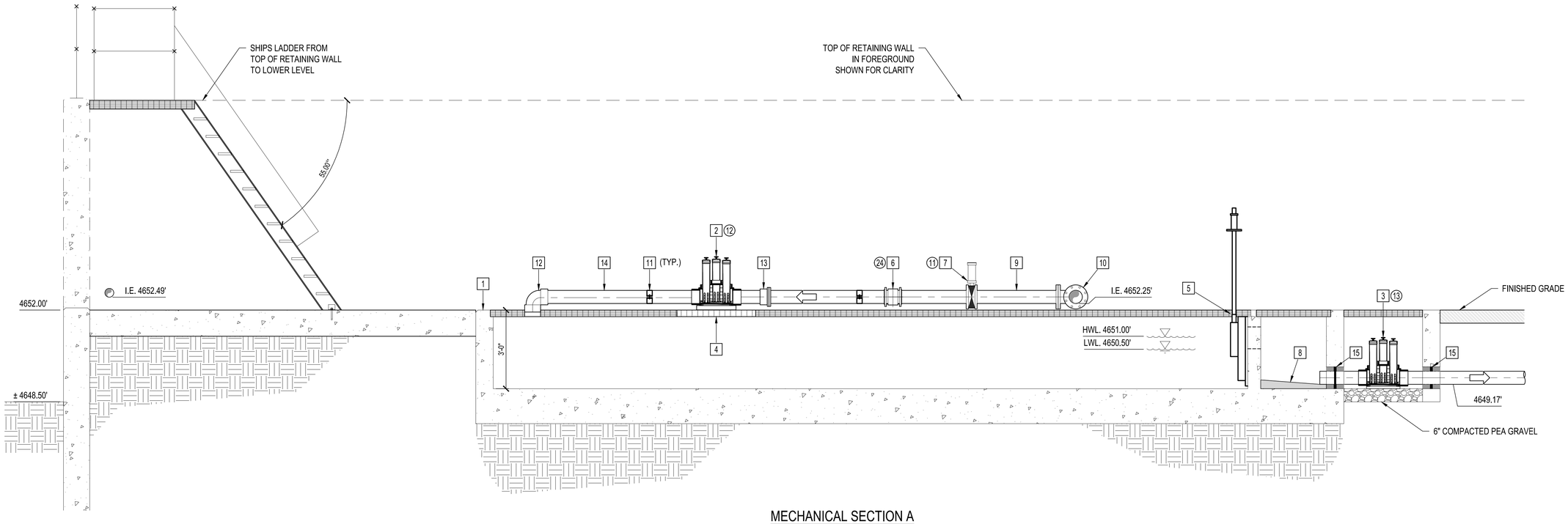

MECHANICAL SECTION A

SCALE: 1/2"=1'-0"

100% ISSUED FOR BID

NO	BY	DATE	REVISIONS	DATE	APP.

Registered Professional Engineer (Civil) CERTIFICATE NO. 70097 Timothy B. Pierce Signed ARIZONA, U.S.A. Expires 12/31/28

THESE DRAWINGS ARE THE PROPERTY OF P.A.C.E. AND SHALL NOT BE REPRODUCED IN ANY MANNER NOR BE USED FOR CONSTRUCTION UNLESS STAMPED 'ISSUED FOR CONSTRUCTION'.

PREPARED BY: PACE
DESIGNED BY: NE
DRAWN BY: DS, WW
CHECKED BY: TP
SCALE: AS NOTED
DATE: NOV 2025
JOB NO.: B614

TITLE: CHLORINE CONTACT BASIN SECTION

JOB: TOWN OF JEROME WASTEWATER TREATMENT PLANT — YAVAPAI CO. AZ

PREPARED BY: TAYLOR B. PIERCE R.C.E 70097 DATE
PACE Advanced Water Engineering
8723 E. Via de Commerce, Suite 104 | Scottsdale, AZ 85258
P: (480) 991-3595 | www.pacewater.com

SHEET M4.1
39 OF 99 SHEETS

JOB NO. B614

W:\B614\Engineering\B614-30\sheets\B614 - MM.0 CCC MECH PLAN AND SECTIONS.dwg - Tab: SECTION 1 - by reddington on 03/02/26 at 9:58:43 AM

CONSTRUCTION NOTES:

1. INSTALL CONCRETE CHLORINE CONTACT CHANNEL PER STRUCTURAL SHT S1.5.
2. INSTALL SOLID METAL GRATING WALKWAY PER SPECIFICATION 05 53 00.
3. INSTALL 6" D.I. PIPE.
4. INSTALL SLUDGE BAGGER SYSTEM.
5. INSTALL SHADE STRUCTURE (PER STRUCTURAL SHT S2.10).
6. INSTALL 14 LF TRENCH DRAIN, NEI MODEL R4996-A8. OR ENGINEER APPROVED EQUAL.
7. INSTALL METAL GRATING WALKWAY PER SPECIFICATION 05 53 00.
8. INSTALL 1" PVC CHECK VALVE.
9. INSTALL 1" BALL VALVE.
10. INSTALL 1" - 90° SCH. 80 PVC BEND.
11. INSTALL 2" SCH. 80 PVC PIPE.
12. INSTALL BAGGER SYSTEM CONTROL PANEL.
13. INSTALL POLYMER METERING PUMP.
14. INSTALL DRY POLYMER MAKE-DOWN AND FEED UNIT.
15. INSTALL DEWATERING FEED PUMP.
16. INSTALL 3" - 90° SCH. 80 PVC BEND.
17. INSTALL 3" SCH. 80 PVC PIPE.
18. INSTALL 3" SCH.80 PVC TEE.
19. INSTALL PVC CAP.
20. RETAINING WALL, PER STRUCTURAL PLANS
21. INSTALL 30" ALUMINUM STEP-UP STAIRCASE.
22. INSTALL 2" - 90° SCH. 80 PVC BEND.
23. PIPE PENETRATION PER G SHEET M8.4.

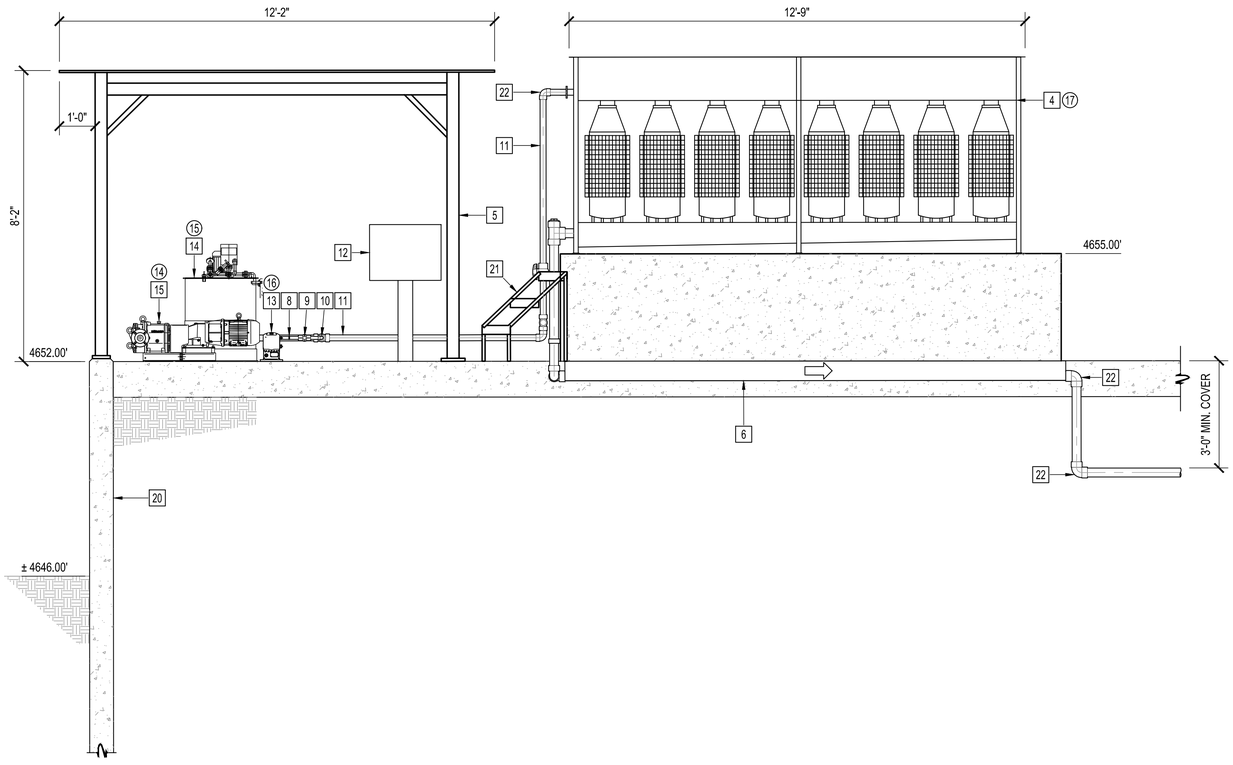

MECHANICAL SECTION B
SCALE: 1/2"=1'-0"

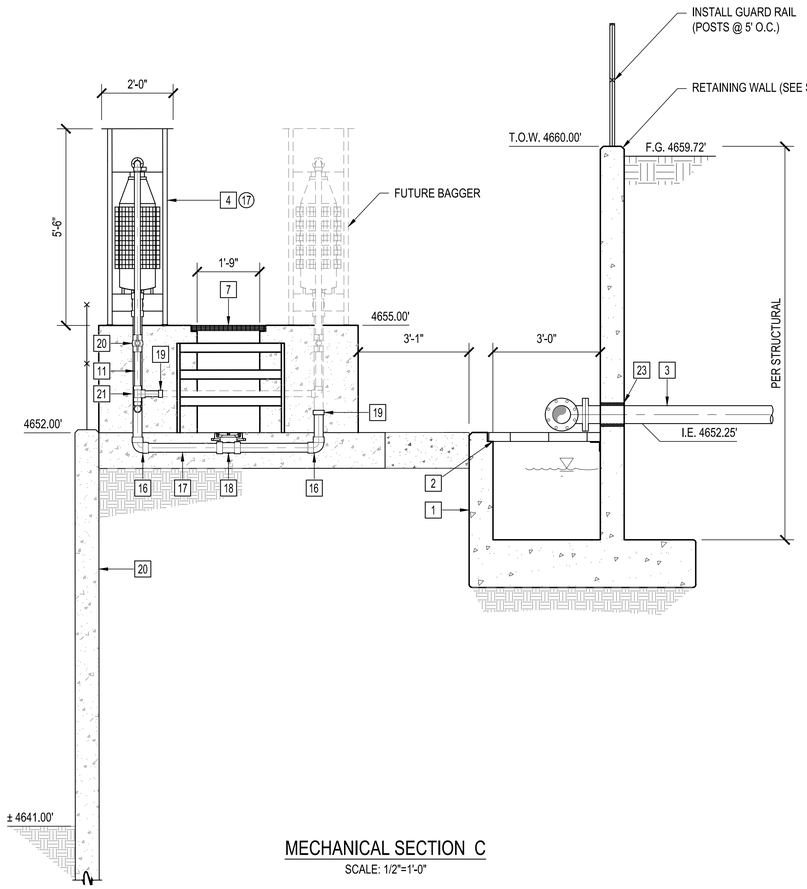

MECHANICAL SECTION C
SCALE: 1/2"=1'-0"

THESE DRAWINGS ARE THE PROPERTY OF P.A.C.E. AND SHALL NOT BE REPRODUCED IN ANY MANNER NOR BE USED FOR CONSTRUCTION UNLESS STAMPED 'ISSUED FOR CONSTRUCTION'.

NO	BY	DATE	REVISIONS	DATE	APP.

Registered Professional Engineer (Civil) CERTIFICATE NO. 70097 TAYLOR B. PIERCE Signed STATE OF ARIZONA, U.S.A. Expires 12/31/28

PREPARED BY: PACE
DESIGNED BY: NE
DRAWN BY: DS, WW
CHECKED BY: TP
SCALE: AS NOTED
DATE: NOV 2025
JOB NO. B614

DEWATERING SECTION

TITLE

JOB
TOWN OF JEROME
WASTEWATER
TREATMENT PLANT
YAVAPAI CO. AZ

100% ISSUED FOR BID

PREPARED BY:
PACE
Advanced Water Engineering
8723 E. VIA de VENTURA, SUITE 290 | SCOTTSDALE, CA 85258
P: (480) 991-3995 | www.paceaz.com
TAYLOR B. PIERCE R.C.E 70097 DATE

SHEET
M4.2
40 OF 99 SHEETS

JOB NO. B614

W:\B614\Engineering\B614-30sheets\B614 - M4.0 CCC MECH PLAN AND SECTIONS.dwg - Tab: SECTION 2 - by reddington on 03/02/26 at 9:58:43 AM

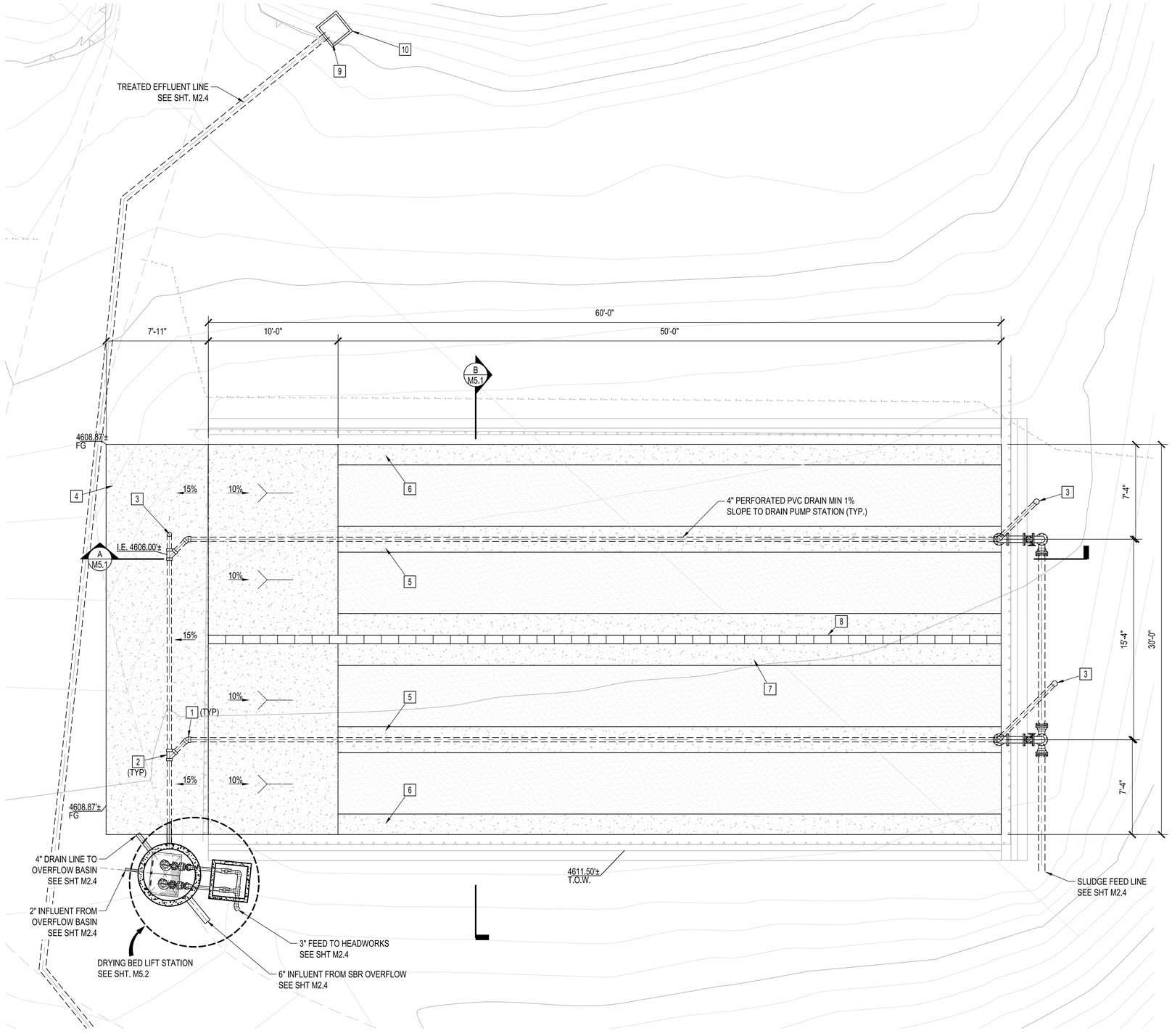

SLUDGE DRYING BED
PLAN VIEW
SCALE: 1/4" = 1'-0"

CONSTRUCTION NOTES:

1. INSTALL 4" - 45° SDR35 PVC BEND.
2. INSTALL 4"x4" SDR35 PVC WYE.
3. INSTALL 4" CLEANOUT PER DETAIL I SHEET M8.3.
4. INSTALL 8" THICK CONCRETE RAMP W #5 AT 12" O.C. EACH WAY, BOTTOM OVER 6" ABC.
5. INSTALL 2'-0" WIDE x8" THICK CONCRETE SLAB W/ 3 #5 CONT. AND #5 AT 16" O.C. TRANS., BOTTOM. TYPICAL OF 2.
6. INSTALL 1'-7" WIDE x8" THICK CONCRETE SLAB W/ 2 #5 CONT. AND #5 AT 16" O.C. TRANS., BOTTOM. TYPICAL OF 2.
7. INSTALL 3'-10" WIDE x12" THICK CONCRETE SLAB W/ 6 #5 CONT. AND #5 AT 16" O.C. TRANS., BOTTOM.
8. INSTALL CMU BLOCK WALL, #5 VERTICAL W/ DOWEL INTO CONCRETE PAD AT 48" O.C. ALTERNATING, GROUT WALL SOLID.
9. INSTALL AUTOSAMPLER, PROVIDED BY TOWN.
10. INSTALL 2'x2'x2' CATCH BASIN TYPE G W/ SINGLE GRATE AND 6" INLET/OUTLET.

NOTES:

1. SLOPE GRADE MIN. 5:1 AWAY AS NEEDED AROUND ENTIRE PERIMETER.
2. PROTECT IN PLACE EXISTING ROADWAY BARRIERS.

NO	BY	DATE	REVISIONS	DATE	APP.

Registered Professional Engineer (Civil)
CERTIFICATE NO.
Timothy B. Pierce
Signed
ARIZONA, U.S.A.
Expires 12/31/28

PREPARED BY: PACE
DESIGNED BY: NE
DRAWN BY: DS, WW
CHECKED BY: TP
SCALE: AS NOTED
DATE: NOV 2025
JOB NO.: B614

THESE DRAWINGS ARE THE PROPERTY OF P.A.C.E. AND SHALL NOT BE REPRODUCED IN ANY MANNER NOR BE USED FOR CONSTRUCTION UNLESS STAMPED 'ISSUED FOR CONSTRUCTION'.

TITLE
SLUDGE DRYING BEDS PLAN

100% ISSUED FOR BID

JOB
TOWN OF JEROME
WASTEWATER
TREATMENT PLANT
YAVAPAI CO. AZ

PREPARED BY:
PACE
Advanced Water Engineering
8723 E. Via de Commercio, Suite 1, Scottsdale, AZ 85258
P: (480) 991-3995 | www.pacewater.com
TAYLOR B. PIERCE R.C.E 70097 DATE

SHEET
M5.0
41 OF 99 SHEETS

JOB NO. B614

W:\B614\Engineering\B614-30\sheets\B614 - M5.0 SLUDGE DRYING BEDS PLAN.dwg - Tab: M5.0 - by neddington on 11/19/25 at 3:14:09 PM

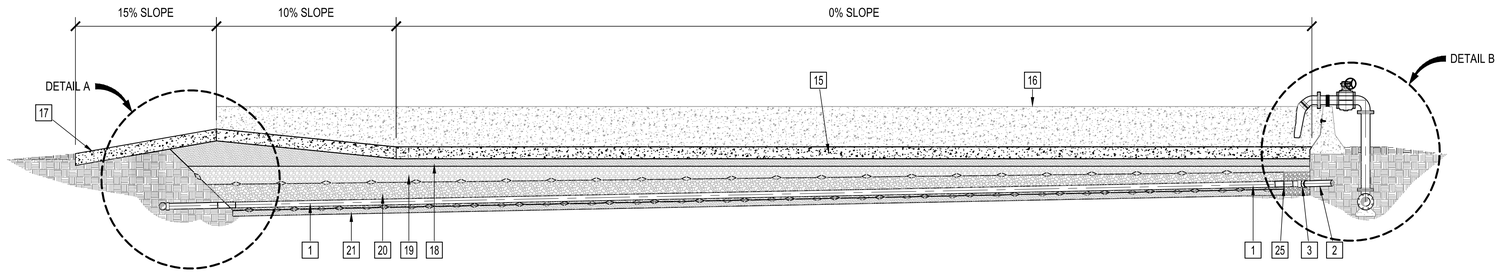

SLUDGE DRYING BED
SECTION - A
SCALE: 1/4" = 1'-0"

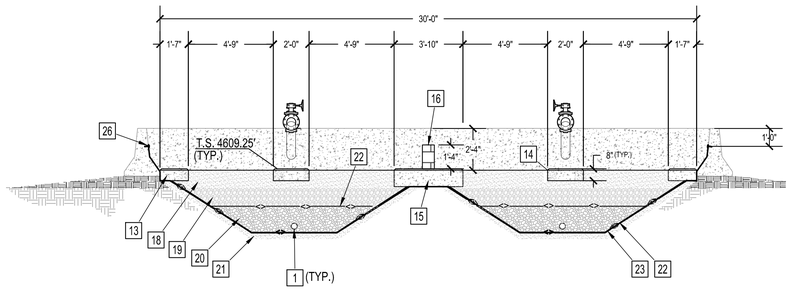

SLUDGE DRYING BED
SECTION - B
SCALE: 1/4" = 1'-0"

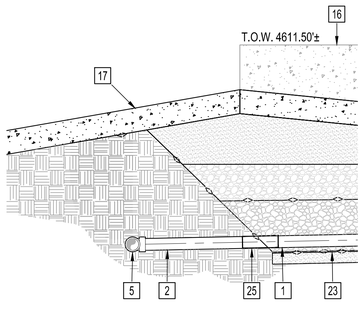

SLUDGE DRYING BED
DETAIL - A
SCALE: 1/2" = 1'-0"

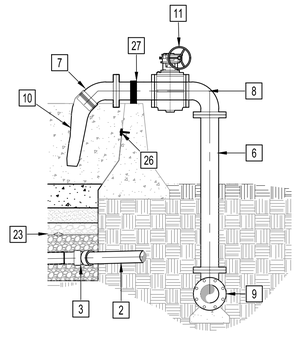

SLUDGE DRYING BED
DETAIL - B
SCALE: 1/2" = 1'-0"

CONSTRUCTION NOTES:

1. INSTALL 4" SDR 35 PVC PERFORATED PIPE.
2. INSTALL 4" SDR 35 PVC PIPE.
3. INSTALL 4" - 45° SDR35 PVC BEND.
4. INSTALL 4" - 90° LONG RADIUS SDR 35 PVC BEND.
5. INSTALL 4" SDR 35 PVC WYE.
6. INSTALL 6" D.I. PIPE.
7. INSTALL 6" - 45° D.I. BEND (FLG'D).
8. INSTALL 6" - 90° D.I. BEND (FLG'D).
9. INSTALL 6"x6"x6" D.I. TEE MJ x FLG'D CONNECTIONS W/ THRUST BLOCK PER DETAIL C SHEET M8.4.
10. INSTALL 6" RUBBER SKIRT W/ SS CLAMPS.
11. INSTALL 6" PLUG VALVE W/ HANDWHEEL.
12. INSTALL 4" CLEANOUT PER DETAIL I SHEET M8.3.
13. INSTALL 1'-7" WIDE x8" THICK CONCRETE SLAB W/ 2 #5 CONT. AND #5 AT 16" O.C. TRANS., BOTTOM. TYPICAL OF 2.
14. INSTALL 2'-0" WIDE x8" THICK CONCRETE SLAB W/ 3 #5 CONT. AND #5 AT 16" O.C. TRANS., BOTTOM. TYPICAL OF 2.
15. INSTALL 3'-10" WIDE x12" THICK CONCRETE SLAB W/ 6 #5 CONT. AND #5 AT 16" O.C. TRANS., BOTTOM.
16. INSTALL CMU BLOCK WALL, #5 VERTICAL W/ DOWEL INTO CONCRETE PAD AT 48" O.C. ALTERNATING, GROUT WALL SOLID.
17. INSTALL 8" THICK CONCRETE RAMP W #5 AT 12" O.C. EACH WAY, BOTTOM OVER 6" ABC.
18. INSTALL 12" SAND LAYER.
19. INSTALL 4-8 mm FINE GRAVEL.
20. INSTALL 1'-6" DEEP ¾" CRUSHED ROCK.
21. INSTALL 4" GRANULAR SAND LAYER.
22. INSTALL 100 mm GEOTEXTILE FABRIC PER SPECS.
23. INSTALL FLEXIBLE POLYPROPYLENE LINER PER SPECS.
24. INSTALL ANCHOR TRENCH PER DETAIL D SHEET M8.3.
25. INSTALL PIPE BOOT PER LINER MANUFACTURER RECOMMENDATIONS AND DETAIL E SHEET M8.3.
26. INSTALL HDPE LINER ANCHOR BOLT, ANCHOR TO EXISTING WALLS PER DETAIL C SHEET M8.3.
27. PIPE SUPPORT / STRAP

NOTES:

1. SLOPE GRADE MIN. 5:1 AWAY AS NEEDED AROUND ENTIRE PERIMETER.
2. PROTECT IN PLACE EXISTING ROADWAY BARRIERS.

NO	BY	DATE	REVISIONS	DATE	APP.

THESE DRAWINGS ARE THE PROPERTY OF P.A.C.E. AND SHALL NOT BE REPRODUCED IN ANY MANNER NOR BE USED FOR CONSTRUCTION UNLESS STAMPED 'ISSUED FOR CONSTRUCTION'.

Registered Professional Engineer (Civil) CERTIFICATE NO. 70097 TAYLOR B. PIERCE Signed ARIZONA, U.S.A. Expires 12/31/28

PREPARED BY:	PACE		
DESIGNED BY:	NE		
DRAWN BY:	DS, WW		
CHECKED BY:	TP	SCALE:	AS NOTED
DATE	NOV 2025		
JOB NO.	B614		

TITLE: **SLUDGE DRYING BEDS SECTIONS**

JOB: TOWN OF JEROME WASTEWATER TREATMENT PLANT — YAVAPAI CO. AZ

100% ISSUED FOR BID

PREPARED BY:
PACE
Advanced Water Engineering
ARIZONA OFFICE: 8123 E. VIA DE COMERCIO, SUITE A-1, SCOTTSDALE, CA 85258
P: (480) 991-3595 | www.pacewater.com
TAYLOR B. PIERCE R.C.E 70097 DATE

SHEET
M5.1
42 OF 99 SHEETS

JOB NO. B614

W:\B614\Engineering\B614-3\Sheets\B614 - M5.0 SLUDGE DRYING BEDS PLAN.dwg - Tab: M5.1 - by maddington on 11/18/25 at 3:14:09 PM

CONSTRUCTION NOTES:

1. INSTALL 3" SCH. 80 PVC PIPE.
2. INSTALL 3" - 45° SCH. 80 PVC BEND.
3. INSTALL 3" - 90° DIP BEND.
4. INSTALL 3" SCH. 80 PVC TEE.
5. INSTALL 3" DIP PLUG VALVE.
6. INSTALL 3" DIP SWING CHECK VALVE.
7. INSTALL S.S PIPE SUPPORT PER DETAIL A SHEET M8.5.
8. INSTALL SUBMERSIBLE PUMP.
9. INSTALL 24"x36" ACCESS HATCH.
10. INSTALL LEVEL FLOAT ASSEMBLY AND SUPPORT STEM PER MANUFACTURER RECOMMENDATIONS.
11. INSTALL PUMP GUIDE RAIL SYSTEM PER MANUFACTURER RECOMMENDATIONS.
12. INSTALL PIPE PENETRATION PER DETAIL G SHEET M8.4.
13. INSTALL PRECAST 3' x 3' x 2' CONCRETE VAULT W/ ACCESS HATCH.
14. INSTALL 3" S.S. PIPE WELL AIR VENT PIPE W/ #20 MESH BUG SCREEN.
15. INSTALL 3+ PVC FLANGE ADAPTER.
16. INSTALL 3" - 90° DIP BEND.
17. INSTALL 3" DIP.
18. INSTALL PVC FLANGE ADAPTER.
19. COAT LIFT STATION AND PIPING FOR SEVERE H_2S CORROSION PER COATING SPECIFICATIONS
20. SUBGRADE PER GEOTECH REPORT

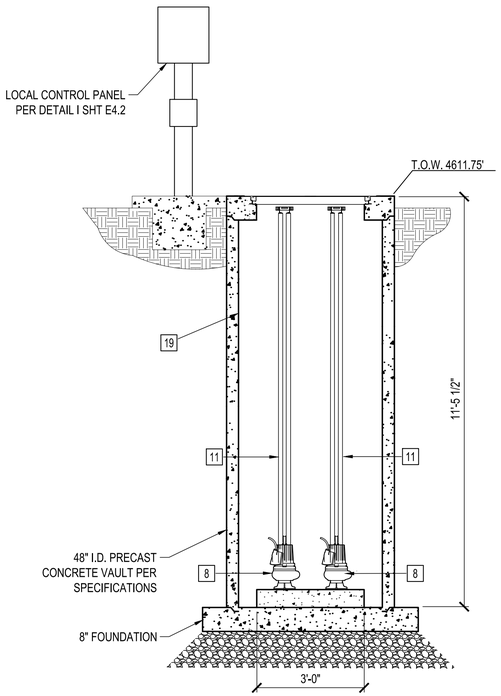

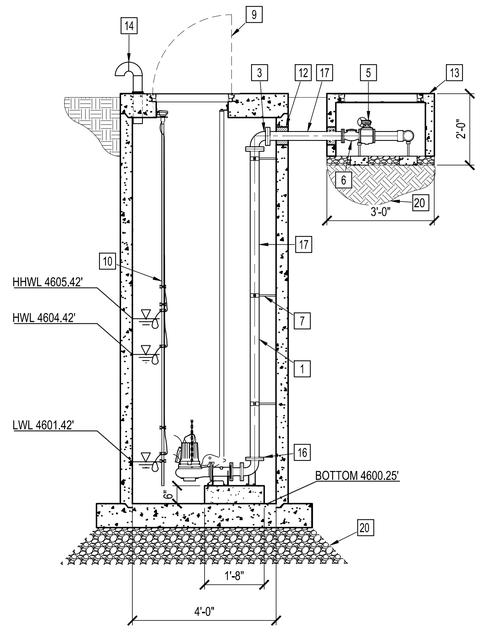

DRYING BED LIFT STATION
SECTIONS
SCALE: 1/2" = 1'-0"

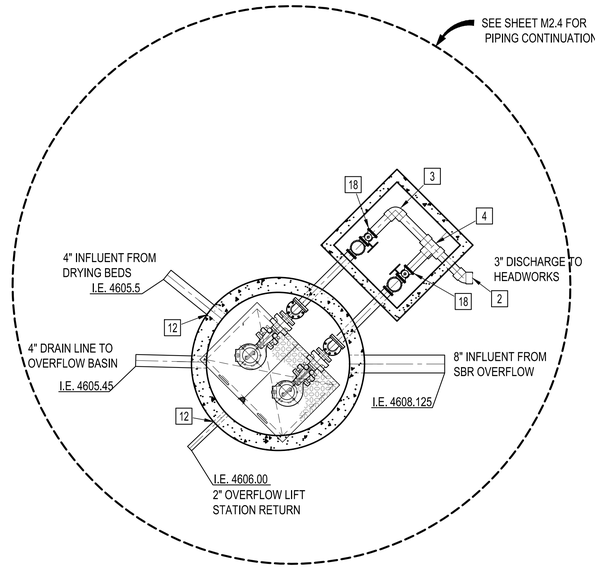

DRYING BED LIFT STATION
PLAN VIEW
SCALE: 1/2" = 1'-0"

NO	BY	DATE	REVISIONS	DATE	APP.

Registered Professional Engineer (Civil)
CERTIFICATE NO. 70097
TAYLOR B. PIERCE
Signed
ARIZONA, U.S.A.
Expires 12/31/28

PREPARED BY: PACE
DESIGNED BY: NE
DRAWN BY: DS, WW
CHECKED BY: TP
SCALE: AS NOTED
DATE: NOV 2025
JOB NO.: B614

THESE DRAWINGS ARE THE PROPERTY OF P.A.C.E. AND SHALL NOT BE REPRODUCED IN ANY MANNER NOR BE USED FOR CONSTRUCTION UNLESS STAMPED 'ISSUED FOR CONSTRUCTION'.

100% ISSUED FOR BID

TITLE: DRYING BED LIFT STATION SECTIONS

JOB: TOWN OF JEROME
WASTEWATER
TREATMENT PLANT
YAVAPAI CO. AZ

PREPARED BY:
PACE
Advanced Water Engineering
8723 E. VIA DE COMMERCIO, SUITE 1-A, SCOTTSDALE, CA 85258
P: (480) 991-3595 | www.pacewater.com
TAYLOR B. PIERCE R.C.E 70097 DATE

SHEET
M5.2
43 OF 99 SHEETS

JOB NO. B614

W:\B614\Engineering\B614-3\Sheets\B614 - M5.0 SLUDGE DRYING BEDS PLAN.dwg - Tab: M5.2 - by noddington on 11/19/25 at 3:14:09 PM

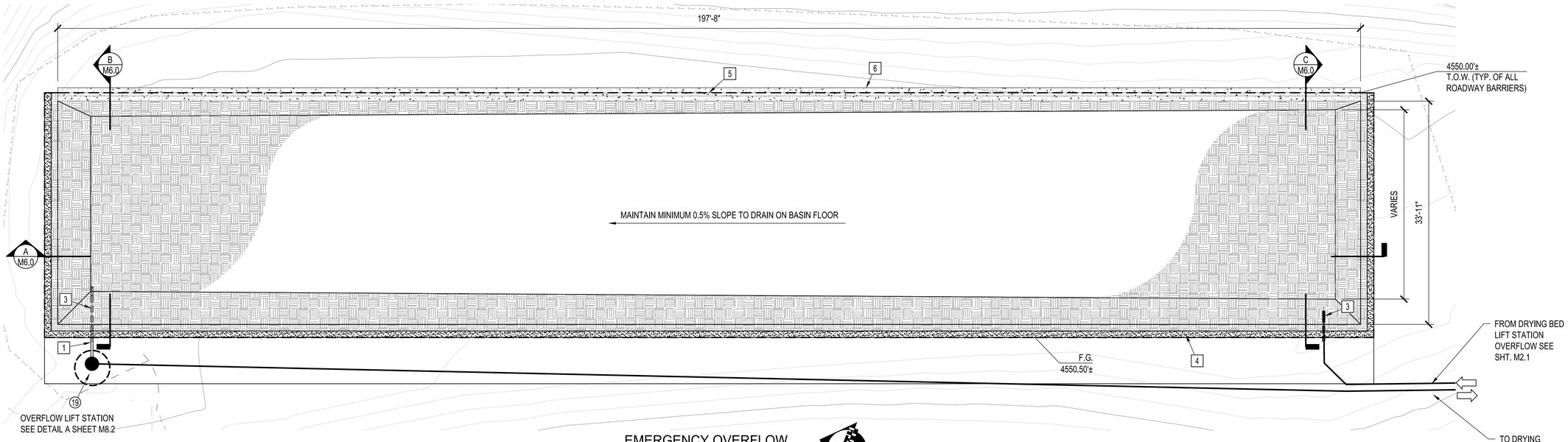

EMERGENCY OVERFLOW
BASIN PLAN VIEW
SCALE: 1/8" = 1'-0"

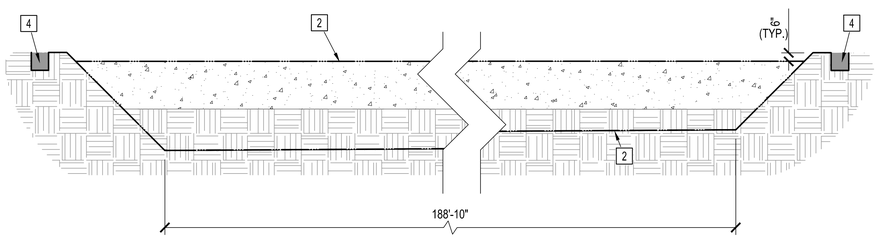

EMERGENCY OVERFLOW BASIN
SECTION - A
SCALE: 1/4" = 1'-0"

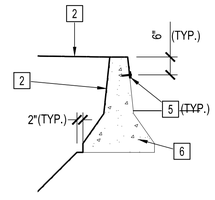

EMERGENCY OVERFLOW BASIN
DETAIL - A
SCALE: 1/2" = 1'-0"

CONSTRUCTION NOTES:

1. INSTALL 4" SDR 35 PVC PIPE.
2. INSTALL HDPE LINER PER SPECIFICATION 31 05 19.16.
3. INSTALL PIPE BOOT PER LINER MANUFACTURER RECOMMENDATIONS AND DETAIL E SHEET M8.3.
4. INSTALL ANCHOR TRENCH PER DETAIL D SHEET M8.3.
5. INSTALL HDPE LINER ANCHOR BOLT, ANCHOR TO EXISTING WALLS PER DETAIL C. SHEET M8.3.
6. PROTECT IN PLACE EXISTING ROADWAY BARRIERS.

NOTES:

1. GRADE ALL BASIN WALLS WITH 1:1 SLOPE TO BASIN FLOOR.
2. SLOPE GRADE MIN 5:1 AWAY AS NEEDED AROUND ENTIRE PERIMETER.
3. CONTRACTOR TO RELOCATE EXISTING ROADWAY BARRIERS FROM ABANDONED BASIN AS NEEDED.

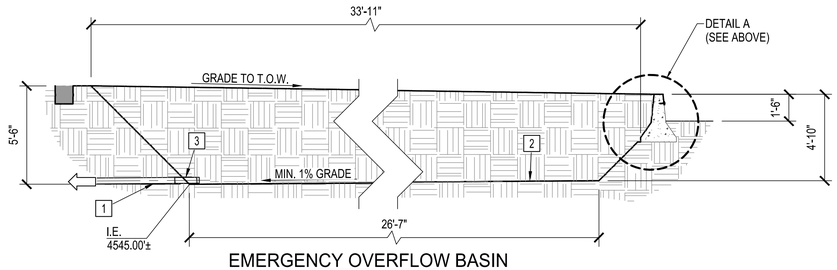

EMERGENCY OVERFLOW BASIN
SECTION - B
SCALE: 1/4" = 1'-0"

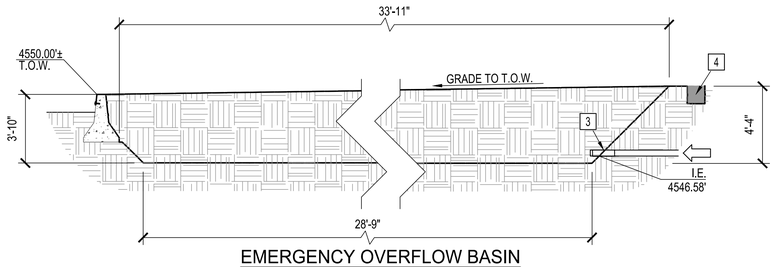

EMERGENCY OVERFLOW BASIN
SECTION - C
SCALE: 1/4" = 1'-0"

NO	BY	DATE	REVISIONS	DATE	APP.

THESE DRAWINGS ARE THE PROPERTY OF P.A.C.E. AND SHALL NOT BE REPRODUCED IN ANY MANNER NOR BE USED FOR CONSTRUCTION UNLESS STAMPED 'ISSUED FOR CONSTRUCTION'.

Registered Professional Engineer (Civil)
CERTIFICATE NO. 70097
TAYLOR B. PIERCE
Signed
ARIZONA, U.S.A.
Expires 12/31/28

PREPARED BY: PACE
DESIGNED BY: NE
DRAWN BY: DS, WW
CHECKED BY: TP
SCALE: AS NOTED
DATE: NOV 2025
JOB NO.: B614

TITLE: EMERGENCY OVERFLOW BASIN PLAN AND SECTIONS

JOB: TOWN OF JEROME WASTEWATER TREATMENT PLANT — YAVAPAI CO. AZ

100% ISSUED FOR BID

PREPARED BY: TAYLOR B. PIERCE — R.C.E 70097 — DATE

PACE
Advanced Water Engineering
8723 E. VIA DE VENTURA, SUITE A-100, SCOTTSDALE, CA 85258
P: (480) 991-3995 | www.paceaz.com

SHEET
M6.0
44 OF 99 SHEETS

JOB NO. B614

W:\B614\Engineering\B614-30sheets\B614 - M6.0 EMERGENCY OVERFLOW STORAGE PLAN.dwg - Tab: M6.0 - by reddington on 11/19/25 at 2:37:31 PM

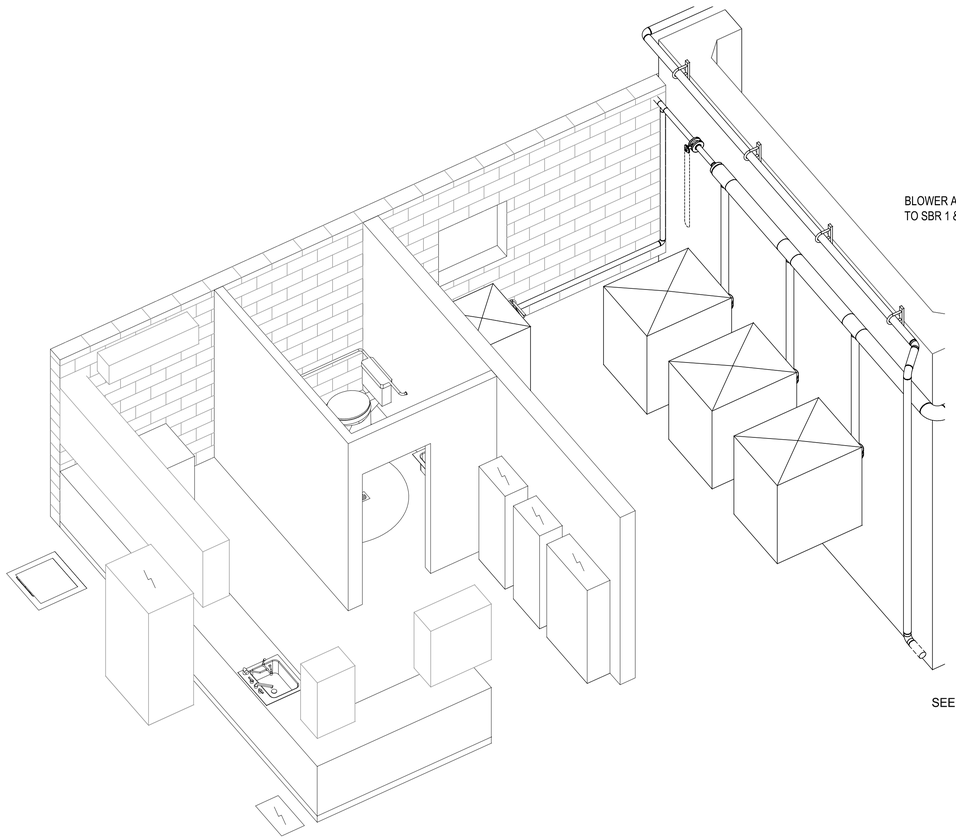

ISOMETRIC VIEW - NE
SCALE: N.T.S.

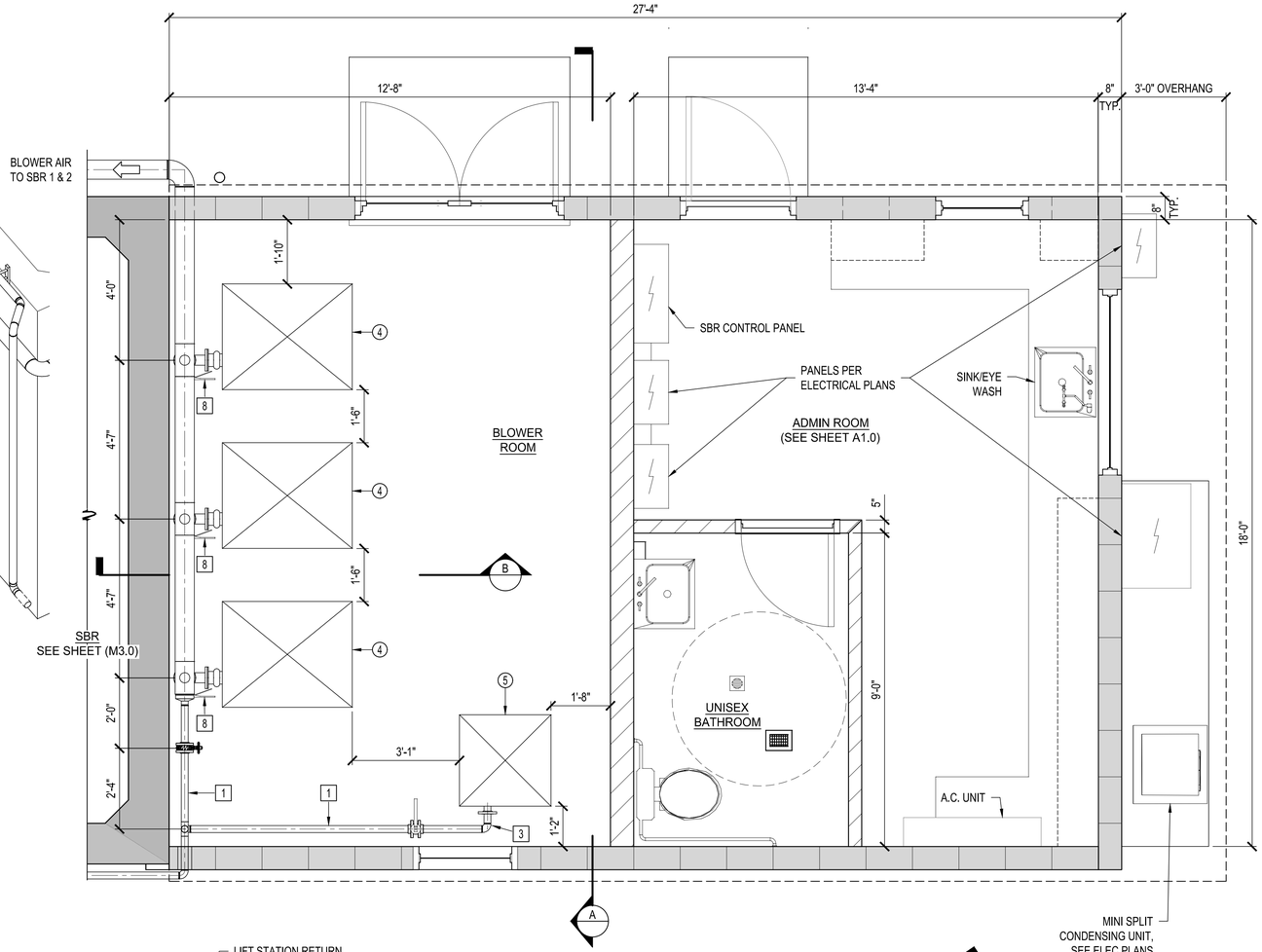

MECHANICAL PLAN - ABOVE
SCALE: 1/2" = 1'-0"

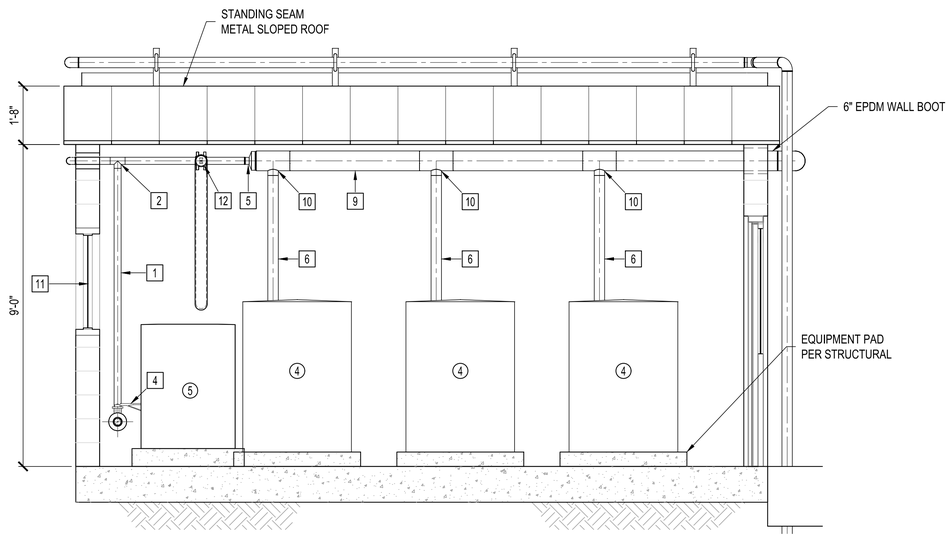

SECTION-A
SCALE: 1/2" = 1'-0"

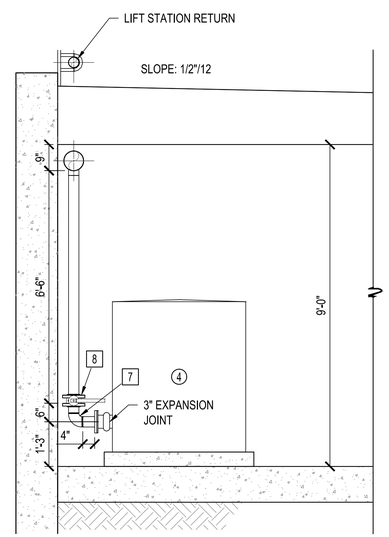

SECTION-B
SCALE: 1/2" = 1'-0"

CONSTRUCTION NOTES:

1. INSTALL 2" SCH. 10 CARBON STEEL PIPE.
2. INSTALL 2" SCH. 10 CARBON STEEL TEE.
3. INSTALL 2" - 90° SCH. 10 CARBON STEEL BEND
4. INSTALL 2" BUTTERFLY VALVE.
5. INSTALL 6"x2" SCH. 10 CARBON STEEL REDUCER.
6. INSTALL 3" SCH. 10 CARBON STEEL PIPE.
7. INSTALL 3" - 90° SCH. 10 CARBON STEEL BEND.
8. INSTALL 3" BUTTERFLY VALVE.
9. INSTALL 6" SCH. 10 CARBON STEEL PIPE.
10. INSTALL 6"x3"x6" SCH. 10 CARBON STEEL TEE.
11. INSTALL 3'x3' ACOUSTICAL LOUVER PER SPECIFICATION 08 9100.
12. INSTALL 2" BUTTERFLY VALVE WITH CHAIN WHEEL

NO	BY	DATE	REVISIONS	DATE	APP.

Registered Professional Engineer (Civil)
CERTIFICATE NO. 70097
Timothy R. Pierce
Signed
ARIZONA, U.S.A.
Expires 12/31/28

PREPARED BY: PACE
DESIGNED BY: NE
DRAWN BY: DS, WW
CHECKED BY: TP
SCALE: AS NOTED
DATE: NOV 2025
JOB NO.: B614

THESE DRAWINGS ARE THE PROPERTY OF P.A.C.E. AND SHALL NOT BE REPRODUCED IN ANY MANNER NOR BE USED FOR CONSTRUCTION UNLESS STAMPED 'ISSUED FOR CONSTRUCTION'.

TITLE: **BLOWER OPS PLAN**

JOB: TOWN OF JEROME
WASTEWATER
TREATMENT PLANT
YAVAPAI CO. AZ

100% ISSUED FOR BID

PREPARED BY: TAYLOR B. PIERCE R.C.E 70097 DATE
PACE
Advanced Water Engineering
8723 E. Vía de Commercio, Suite 2-104, SCOTTSDALE, CA 85258
P: (408) 991-3595 | www.pacewater.com

SHEET
M7.0
45 OF 99 SHEETS

JOB NO. B614

W:\B614-Engineering\B614-03\sheets\B614 - M7.0 BLOWER OPS PLAN AND SECTIONS.dwg - Tab: M7.0 - by reddington on 11/21/25 at 12:21:09 PM

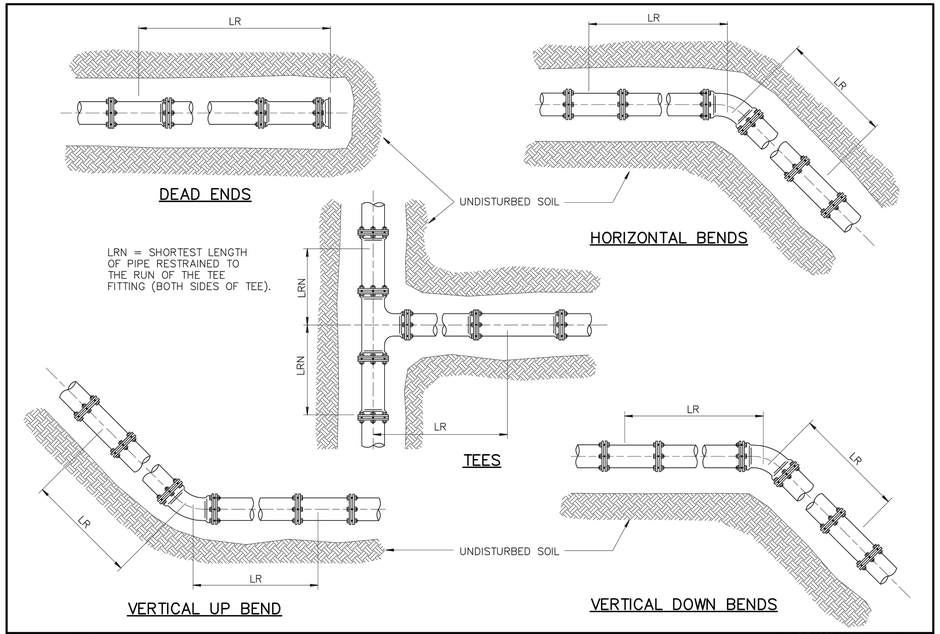

DETAIL NO.	STANDARD DETAIL	JOINT RESTRAINT FOR DUCTILE IRON, POLYETHYLENE WRAPPED DUCTILE IRON AND PVC WATER PIPES	REVISED	DETAIL NO.
303–1	MARICOPA ASSOCIATION of GOVERNMENTS ENGLISH		01–01–2019	303–1

M.A.G. STANDARD DETAIL #303-1

N.T.S. | A

RESTRAINED LENGTHS, LR, FOR DUCTILE IRON PIPE

NOMINAL PIPE SIZE INCHES	HORIZONTAL BENDS			TEES		VERTICAL OFFSETS						DEAD ENDS
						90° BEND FITTINGS		45° BEND FITTINGS		22–1/2° BEND FITTINGS		
	90°	45°	22–1/2°	LRN=0'	LRN=10'	DOWN BEND	UP BEND	DOWN BEND	UP BEND	DOWN BEND	UP BEND	
4	18	7	4	30	8	31	18	13	7	6	3	31
6	25	10	5	43	20	44	25	18	10	9	5	44
8	32	13	6	56	34	58	32	24	13	11	6	58
10	38	16	8	68	45	69	38	29	16	14	8	69
12	45	19	9	80	57	81	45	34	19	16	9	81
14	51	21	10	91	68	92	51	38	21	18	10	92
16	57	24	11	103	79	104	57	43	24	21	11	104
18	62	26	12	113	90	115	62	48	26	23	12	115
20	68	28	14	125	100	126	68	52	28	25	14	126
24	79	33	16	145	121	147	79	61	33	29	16	147

RESTRAINED LENGTHS, LR, FOR DUCTILE IRON WITH POLYETHYLENE WRAP AND PVC PIPE

NOMINAL PIPE SIZE INCHES	HORIZONTAL BENDS			TEES		VERTICAL OFFSETS						DEAD ENDS
						90° BEND FITTINGS		45° BEND FITTINGS		22–1/2° BEND FITTINGS		
	90°	45°	22–1/2°	LRN=0'	LRN=10'	DOWN BEND	UP BEND	DOWN BEND	UP BEND	DOWN BEND	UP BEND	
4	26	11	5	69	18	72	26	30	11	14	5	72
6	36	15	7	99	47	102	36	42	15	20	7	102
8	47	19	9	130	78	133	47	55	19	26	9	133
10	56	23	11	157	103	159	56	66	23	32	11	159
12	65	27	13	185	131	187	65	77	27	37	13	187
14	74	31	15	211	156	214	74	89	31	42	15	214
16	82	34	16	238	183	241	82	100	34	48	16	241
18	90	37	18	263	207	266	90	110	38	53	18	266
20	98	41	20	289	233	292	98	121	41	58	20	292
24	113	47	22	337	280	340	113	141	47	68	22	340

NOTES:

1. ALL JOINTS WITHIN THE SPECIFIED LENGTH LR MUST BE RESTRAINED. ALL LENGTHS ARE GIVEN IN FEET.
2. THE MAXIMUM TEST PRESSURE SHALL NOT EXCEED 200 PSI
3. THE MINIMUM DEPTH OF BURY SHALL BE 3' TO TOP OF PIPE.
4. RESTRAINED LENGTHS MAY BE REDUCED WHEN SUPPORTED BY ENGINEERING CALCULATIONS.

DETAIL NO.	STANDARD DETAIL	JOINT RESTRAINT FOR DUCTILE IRON, POLYETHYLENE WRAPPED DUCTILE IRON AND PVC WATER PIPES	REVISED	DETAIL NO.
303–2	MARICOPA ASSOCIATION of GOVERNMENTS ENGLISH		01–01–2019	303–2

M.A.G. STANDARD DETAIL #303-2

N.T.S. | B

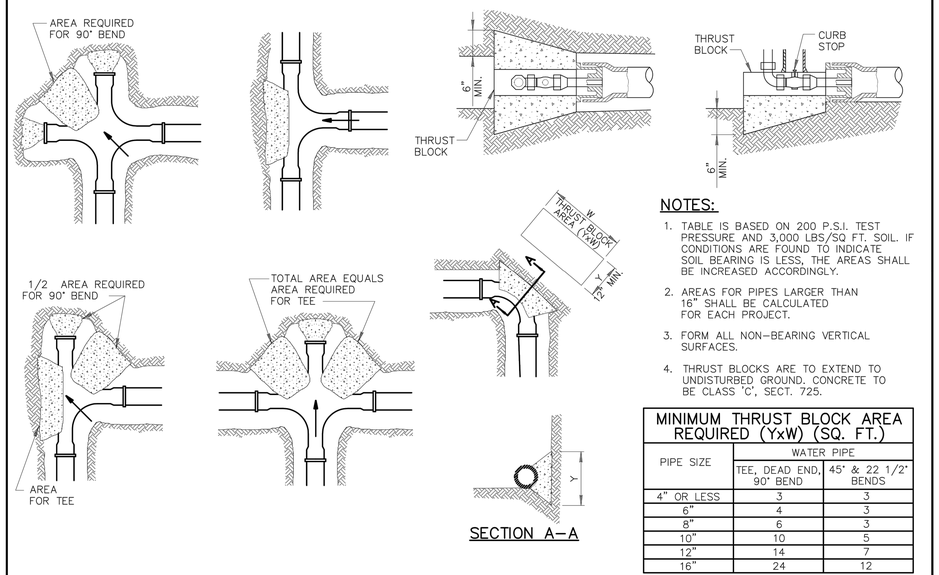

NOTES:

1. TABLE IS BASED ON 200 P.S.I. TEST PRESSURE AND 3,000 LBS/SQ FT. SOIL. IF CONDITIONS ARE FOUND TO INDICATE SOIL BEARING IS LESS, THE AREAS SHALL BE INCREASED ACCORDINGLY.
2. AREAS FOR PIPES LARGER THAN 16" SHALL BE CALCULATED FOR EACH PROJECT.
3. FORM ALL NON–BEARING VERTICAL SURFACES.
4. THRUST BLOCKS ARE TO EXTEND TO UNDISTURBED GROUND. CONCRETE TO BE CLASS 'C', SECT. 725.

MINIMUM THRUST BLOCK AREA REQUIRED (YxW) (SQ. FT.)		
PIPE SIZE	WATER PIPE	
	TEE, DEAD END, 90° BEND	45° & 22 1/2° BENDS
4" OR LESS	3	3
6"	4	3
8"	6	3
10"	10	5
12"	14	7
16"	24	12

DETAIL NO.	STANDARD DETAIL	THRUST BLOCKS FOR WATER LINES	REVISED	DETAIL NO.
380	MARICOPA ASSOCIATION of GOVERNMENTS ENGLISH		01–01–1998	380

M.A.G. STANDARD DETAIL #380

N.T.S. | C

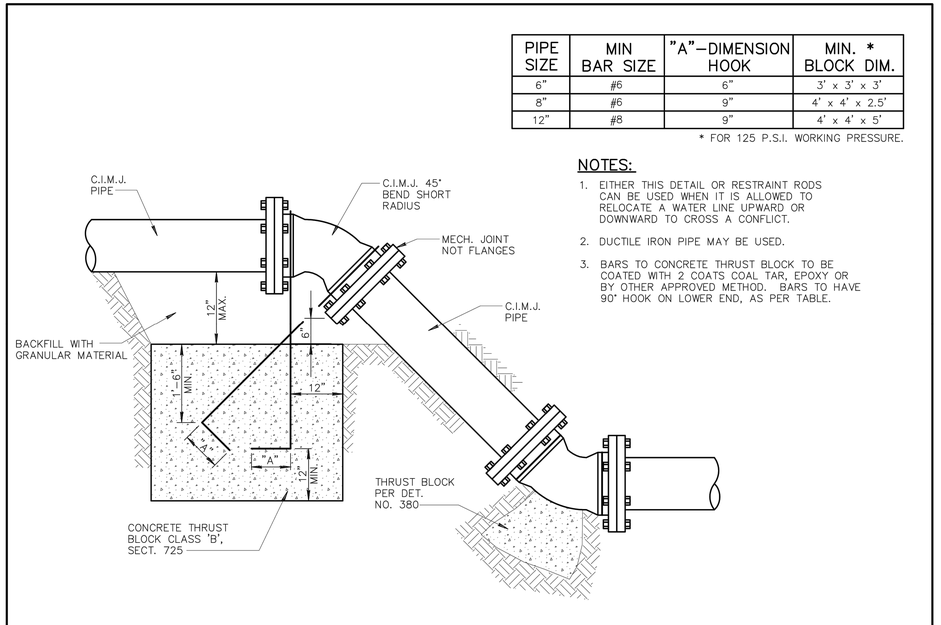

PIPE SIZE	MIN BAR SIZE	"A"–DIMENSION HOOK	MIN. * BLOCK DIM.
6"	#6	6"	3' x 3' x 3'
8"	#6	9"	4' x 4' x 2.5'
12"	#8	9"	4' x 4' x 5'

* FOR 125 P.S.I. WORKING PRESSURE.

NOTES:

1. EITHER THIS DETAIL OR RESTRAINT RODS CAN BE USED WHEN IT IS ALLOWED TO RELOCATE A WATER LINE UPWARD OR DOWNWARD TO CROSS A CONFLICT.
2. DUCTILE IRON PIPE MAY BE USED.
3. BARS TO CONCRETE THRUST BLOCK TO BE COATED WITH 2 COATS COAL TAR, EPOXY OR BY OTHER APPROVED METHOD. BARS TO HAVE 90° HOOK ON LOWER END, AS PER TABLE.

DETAIL NO.	STANDARD DETAIL	ANCHOR BLOCKS FOR VERTICAL BENDS	REVISED	DETAIL NO.
381	MARICOPA ASSOCIATION of GOVERNMENTS ENGLISH		01–01–1998	381

M.A.G. STANDARD DETAIL #381

N.T.S. | D

NO	BY	DATE	REVISIONS	DATE	APP.

Registered Professional Engineer (Civil) CERTIFICATE NO. 70097 Timothy B. Pace Signed ARIZONA, U.S.A. Expires 12/31/28

PREPARED BY:	PACE
DESIGNED BY:	NE
DRAWN BY:	DS, WW
CHECKED BY:	TP
SCALE:	AS NOTED
DATE	NOV 2025
JOB NO.	B614

THESE DRAWINGS ARE THE PROPERTY OF P.A.C.E. AND SHALL NOT BE REPRODUCED IN ANY MANNER NOR BE USED FOR CONSTRUCTION UNLESS STAMPED 'ISSUED FOR CONSTRUCTION'.

MECHANICAL DETAILS I

TITLE

100% ISSUED FOR BID

JOB TOWN OF JEROME WASTEWATER TREATMENT PLANT YAVAPAI CO. AZ

PREPARED BY: PACE
Advanced Water Engineering
8723 E. Via de Ventura, Suite A-100, SCOTTSDALE, CA 85258
P: (480) 991-3985 | www.pacewater.com
TAYLOR B. PIERCE R.C.E 70097 DATE

SHEET M8.0 46 OF 99 SHEETS

JOB NO. B614

W:\B614\Engineering\B614-30sheet\B614 - M8.0 MECHANICAL DETAILS.dwg - Tab: M8.0 - by maddington on 02/23/26 at 12:41:49 PM

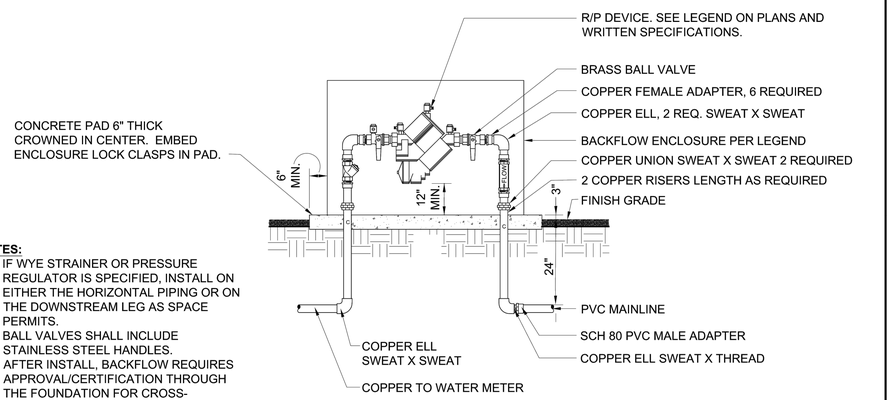

NOTES:

1. IF WYE STRAINER OR PRESSURE REGULATOR IS SPECIFIED, INSTALL ON EITHER THE HORIZONTAL PIPING OR ON THE DOWNSTREAM LEG AS SPACE PERMITS.
2. BALL VALVES SHALL INCLUDE STAINLESS STEEL HANDLES.
3. AFTER INSTALL, BACKFLOW REQUIRES APPROVAL/CERTIFICATION THROUGH THE FOUNDATION FOR CROSS-CONNECTION CONTROL AND HYDRAULIC RESEARCH (USC), OR A THIRD-PARTY CERTIFYING ENTITY THAT IS UNRELATED TO THE PRODUCT'S MANUFACTURER OR VENDOR, THAT IS APPROVED BY THE ARIZONA DEPARTMENT OF ENVIRONMENTAL QUALITY.

DETAIL NO.		STANDARD DETAIL		REVISED	DETAIL NO.
611-1	MARICOPA ASSOCIATION of GOVERNMENTS	ENGLISH	BACKFLOW PREVENTER ASSEMBLY (2" DIA. & SMALLER)	01-01-2023	611-1

M.A.G. STANDARD DETAIL #611-1

N.T.S. | A

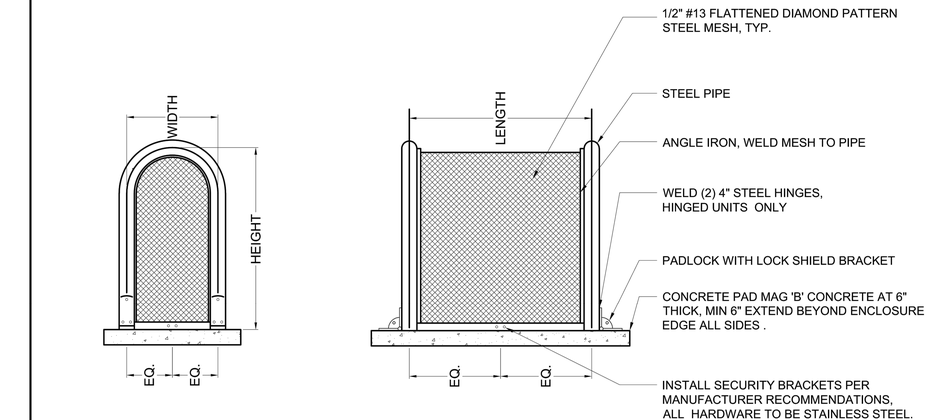

NOTES:

1. ENCLOSURE SHALL BE POWDER COATED BY MANUFACTURER.
2. SEE LEGEND FOR REQUIRED SIZE & COLOR.
3. CONTRACTOR SHALL SUPPLY CONCRETE PAD.

CENTERLINE DIMENSIONS	TYPE
12"W X 18"H X 12"L	LIFT OFF UNIT
12"W X 24"H X 24"L	LIFT OFF UNIT
12"W X 24"H X 32"L	LIFT OFF UNIT
12"W X 24"H X 42"L	HINGED UNIT
12"W X 30"H X 42"L	HINGED UNIT
18"W X 30"H X 48"L	HINGED UNIT

DETAIL NO.		STANDARD DETAIL		REVISED	DETAIL NO.
611-3	MARICOPA ASSOCIATION of GOVERNMENTS	ENGLISH	ENCLOSURE CAGE FOR BACKFLOW PREVENTER	01-01-2023	611-3

M.A.G. STANDARD DETAIL #611-3

N.T.S. | B

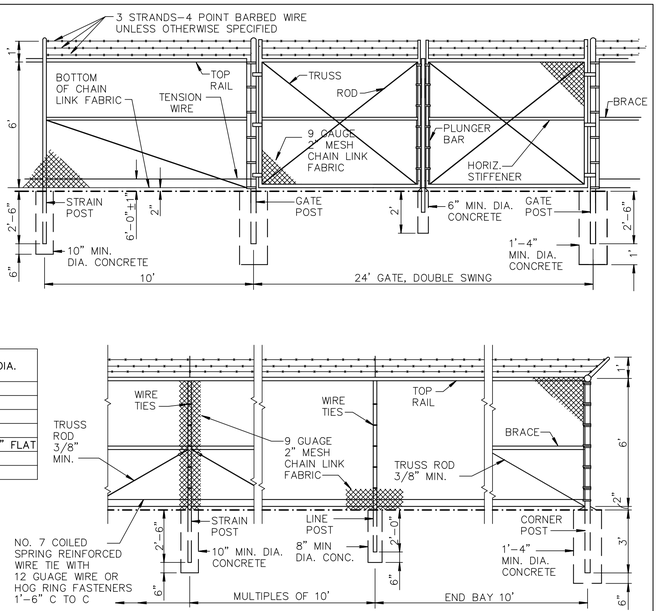

NOTES

1. ALL CONCRETE SHALL BE CLASS 'C' PER SECT. 725.
2. FITTINGS NOT SPECIFICALLY DETAILED SHALL BE HEAVY DUTY DESIGN.
3. STRAIN POSTS SHALL BE SPACED AT 500' MAXIMUM SPACING.
4. BOTH CORNER AND STRAIN POSTS SHALL HAVE STRAIN PANELS.
5. ALL POSTS SHALL BE CAPPED.
6. MEMBER SIZES SHALL BE THE FOLLOWING:

MEMBER	AISC SIZE	OUTSIDE DIA.
CORNER POST	2-1/2"	2.875"
LINE POST	1-1/2"	1.900"
STRAIN POST	1-1/2"	1.900"
BRACE	1-1/4"	1.666"
STRETCH BAR	3/16"x3/4" FLAT	3/16"x3/4" FLAT
GATE POST	3-1/2"	4.000"
TOP RAIL	1-1/4"	1.666"

7. CONSTRUCTION AND MATERIALS SHALL CONFORM TO SECT. 420 AND 772, RESPECTIVELY. SEE TABLE 772-1 FOR WEIGHTS OF MEMBERS.

DETAIL NO.		STANDARD DETAIL		REVISED	DETAIL NO.
160	MARICOPA ASSOCIATION of GOVERNMENTS	ENGLISH	6' CHAIN LINK FENCE AND GATE	01-01-2013	160

M.A.G. STANDARD DETAIL #160

N.T.S. | C

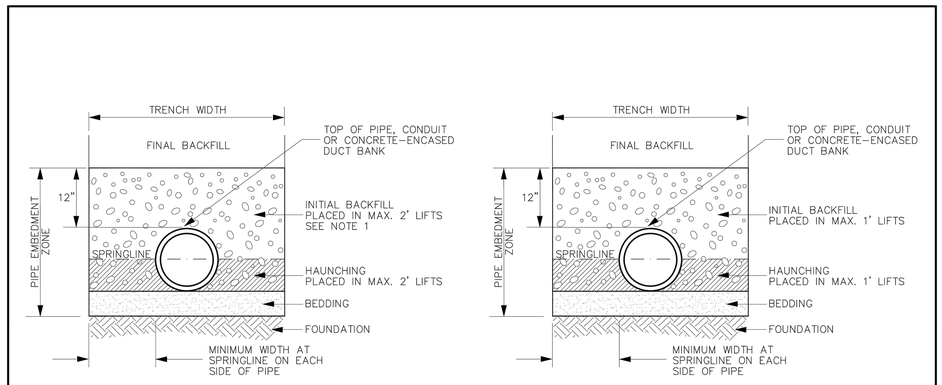

TRENCH-CROSS SECTION DETAIL
RIGID PIPE

TRENCH-CROSS SECTION DETAIL
FLEXIBLE PIPE

NOTES:

1. BEDDING, HAUNCHING AND INITIAL BACKFILL MATERIAL SHALL BE ABC PER SECTION 702. SEE SECTION 601 FOR ALTERNATIVE MATERIALS TO BE USED WITH AGENCY APPROVAL INCLUDING MAXIMUM 1-1/2" NATIVE MATERIAL FOR CONCRETE PIPE INITIAL BACKFILL.
2. SEE SECTION 601 FOR ADDITIONAL TRENCH WIDTH, EXCAVATION, BACKFILLING AND COMPACTION REQUIREMENTS.
3. SEE SECTION 601 FOR PIPE MATERIALS CONSIDERED AS RIGID OR FLEXIBLE.

DETAIL NO.		STANDARD DETAIL		REVISED	DETAIL NO.
200-3	MARICOPA ASSOCIATION of GOVERNMENTS	ENGLISH	TRENCH BACKFILL AND SURFACE REPLACEMENT	01-01-2023	200-3

M.A.G. STANDARD DETAIL #200-3

N.T.S. | D

NO	BY	DATE	REVISIONS	DATE	APP.

Registered Professional Engineer (Civil) CERTIFICATE NO. 70097 TAYLOR B. PIERCE Signed ARIZONA, U.S.A. Expires 12/31/28

PREPARED BY: PACE
DESIGNED BY: NE
DRAWN BY: DS, WW
CHECKED BY: TP
SCALE: AS NOTED
DATE: NOV 2025
JOB NO.: B614

MECHANICAL DETAILS II

TITLE

TOWN OF JEROME
WASTEWATER
TREATMENT PLANT
YAVAPAI CO. AZ

JOB

100% ISSUED FOR BID

PREPARED BY: TAYLOR B. PIERCE R.C.E 70097 DATE

PACE
Advanced Water Engineering
8723 E. Via de Ventura, Suite F-110, SCOTTSDALE, CA 85258
P. (480) 991-3595 | www.pacewater.com

SHEET
M8.1
47 OF 99 SHEETS

JOB NO. B614

THESE DRAWINGS ARE THE PROPERTY OF P.A.C.E. AND SHALL NOT BE REPRODUCED IN ANY MANNER NOR BE USED FOR CONSTRUCTION UNLESS STAMPED 'ISSUED FOR CONSTRUCTION'.

W:\B614\Engineering\B614-30\sheets\B614 - M8.0 MECHANICAL DETAILS.dwg - Tab: M8.1 - by maddingtondon on 02/23/26 at 12:41:49 PM

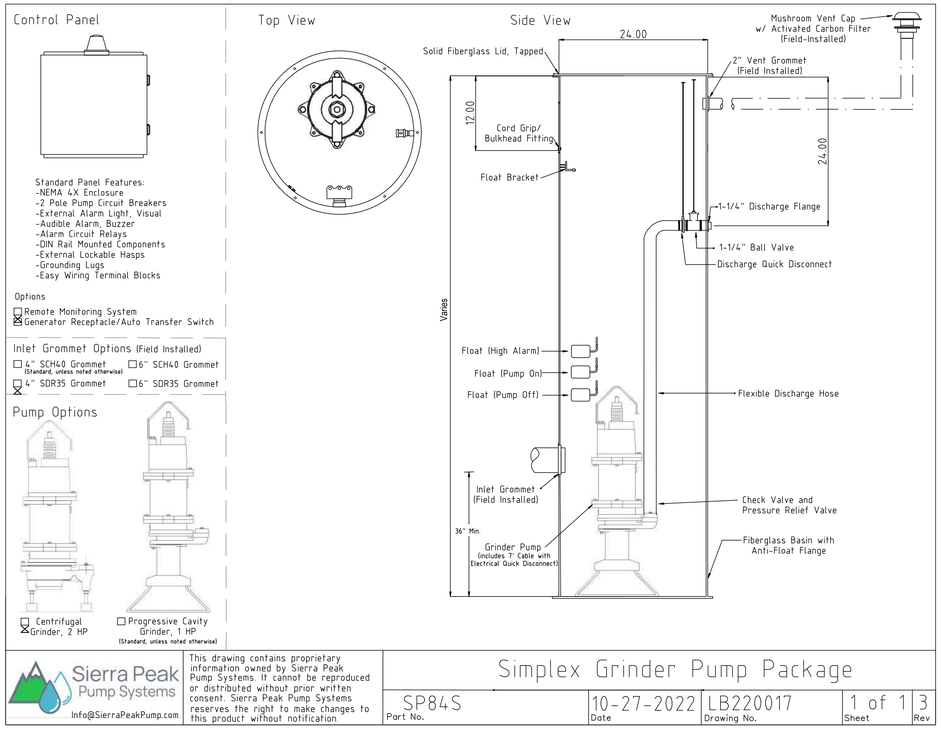

OVERFLOW LIFT STATION / OR EQUAL

N.T.S. | A

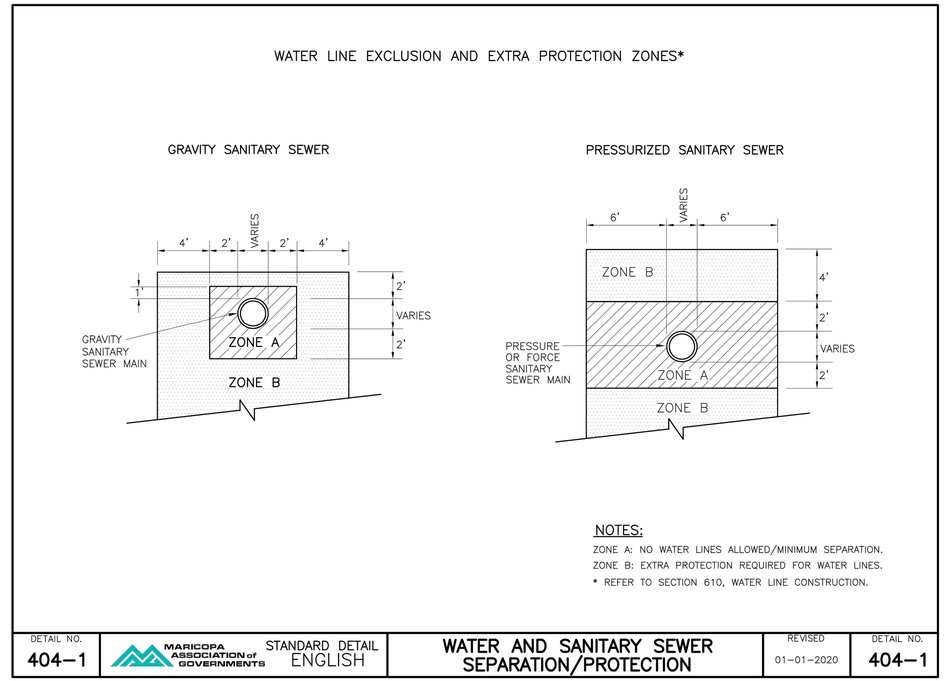

M.A.G. STANDARD DETAIL #404-1

N.T.S. | B

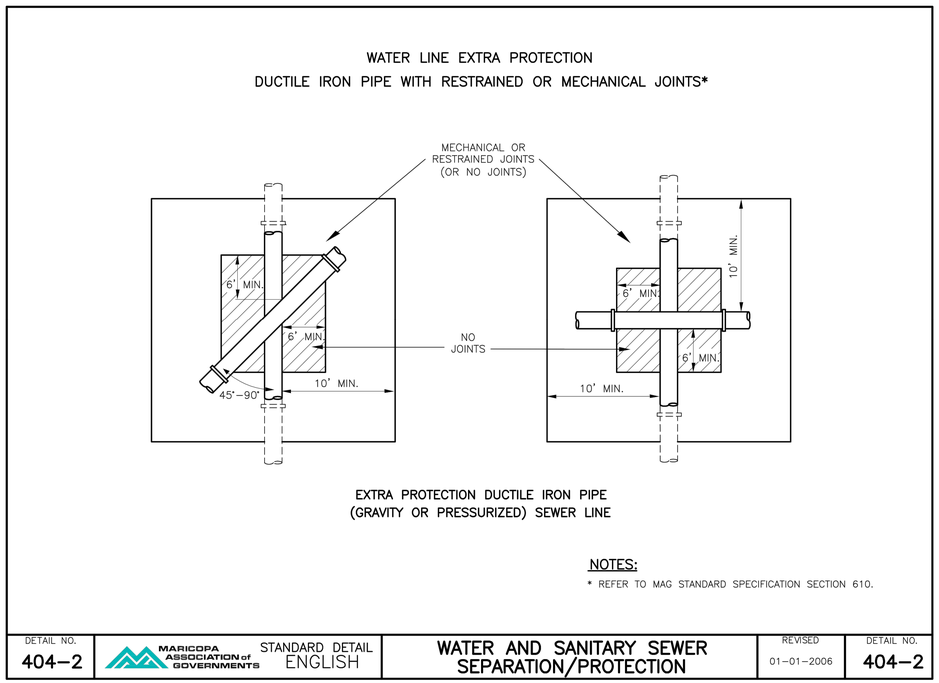

M.A.G. STANDARD DETAIL #404-2

N.T.S. | C

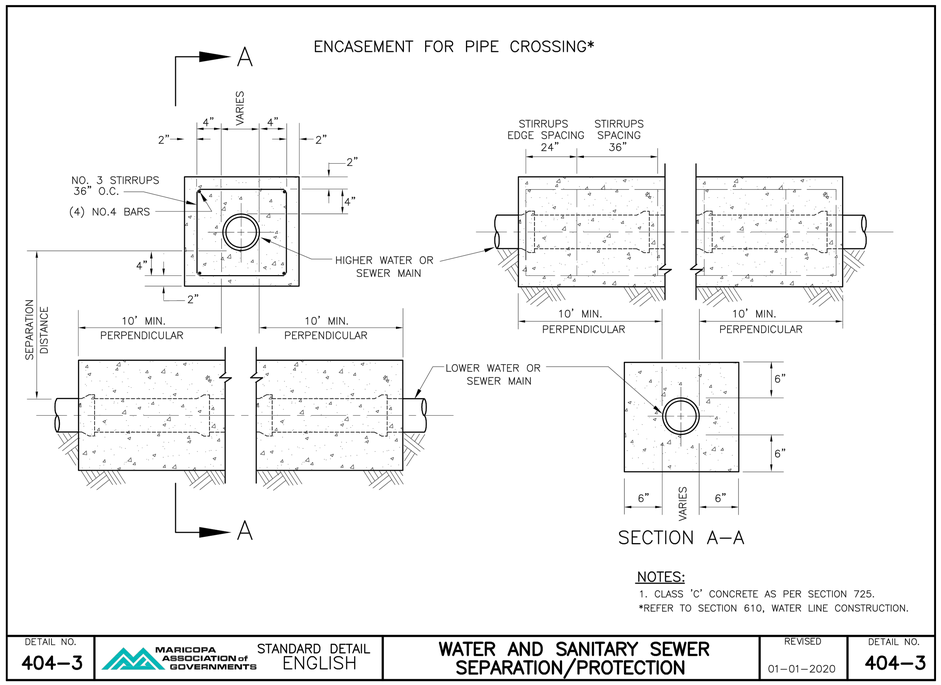

M.A.G. STANDARD DETAIL #404-3

N.T.S. | D

NO	BY	DATE	REVISIONS	DATE	APP.

Registered Professional Engineer (Civil) CERTIFICATE NO. 70097 Timothy B. Pierce Signed 11/28/25 ARIZONA, U.S.A. Expires 12/31/28

PREPARED BY: PACE
DESIGNED BY: NE
DRAWN BY: DS, WW
CHECKED BY: TP
SCALE: AS NOTED
DATE: NOV 2025
JOB NO.: B614

THESE DRAWINGS ARE THE PROPERTY OF P.A.C.E. AND SHALL NOT BE REPRODUCED IN ANY MANNER NOR BE USED FOR CONSTRUCTION UNLESS STAMPED 'ISSUED FOR CONSTRUCTION'.

TITLE: MECHANICAL DETAILS III

JOB: TOWN OF JEROME WASTEWATER TREATMENT PLANT YAVAPAI CO. AZ

100% ISSUED FOR BID

PREPARED BY: PACE
Advanced Water Engineering
8723 E. Via de Commercio, Suite 110, SCOTTSDALE, CA 85258
P: (480) 391-3595 | www.pacewater.com
TAYLOR B. PIERCE R.C.E 70097 DATE

SHEET M8.2
48 OF 99 SHEETS

JOB NO. B614

W:\B614\Engineering\B614-30sheets\B614 - M8.0 MECHANICAL DETAILS.dwg - Tab: M8.2 - by naddington on 02/23/26 at 12:41:49 PM

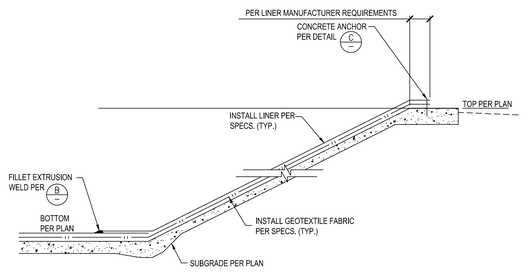

TYPICAL LINER SECTION 1"=1'-0" A

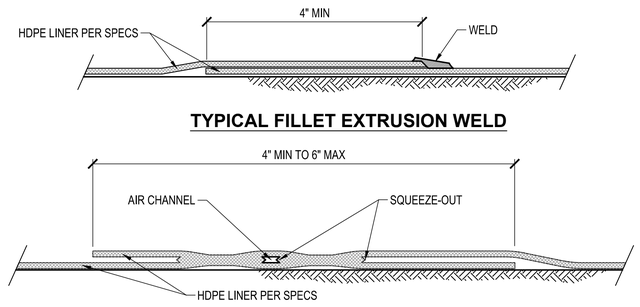

WELD DETAIL N.T.S. B

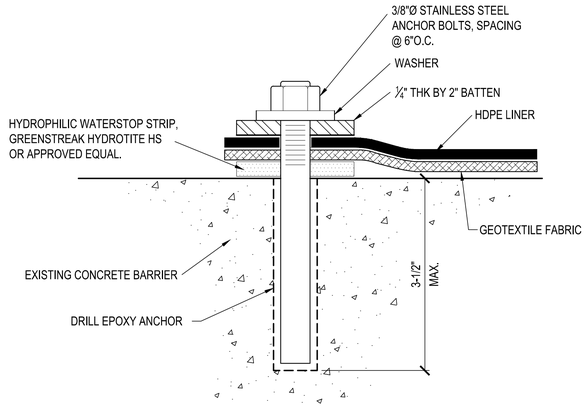

CONCRETE ANCHOR 1"=1'-0" C

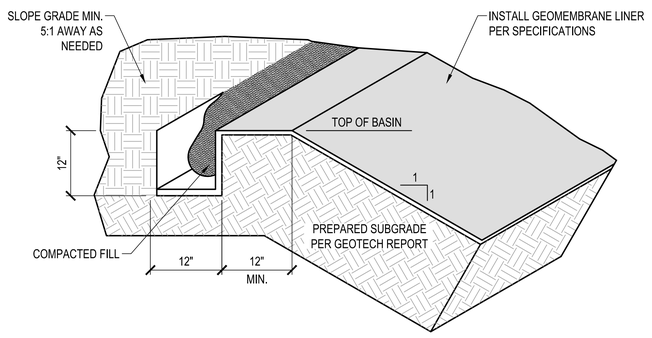

ANCHOR TRENCH N.T.S. D

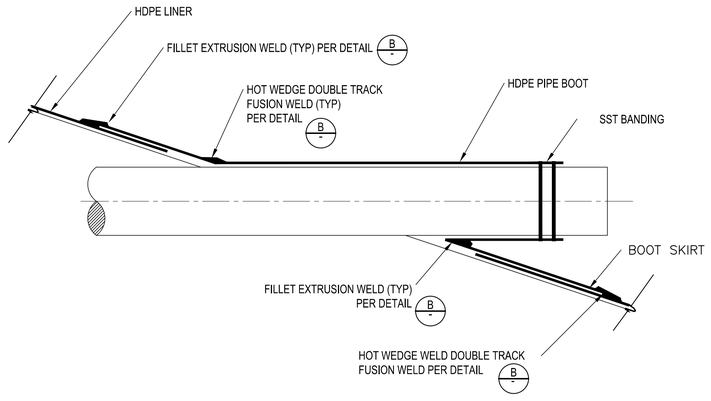

PIPE BOOT 1" = 1'-0" E

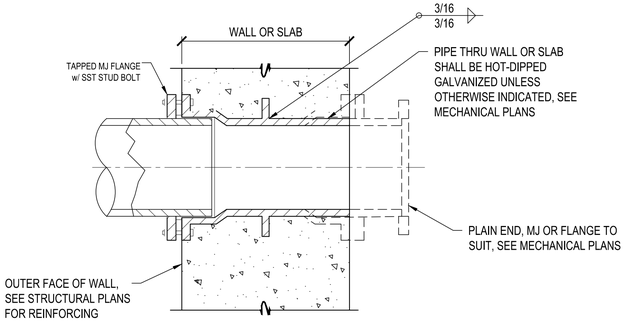

NOTE:
COAT PIPE WITH SPECIFIED PAINT SYSTEM PRIOR TO CONCRETE PLACEMENT

MECHANICAL JOINT WALL SLEEVE F

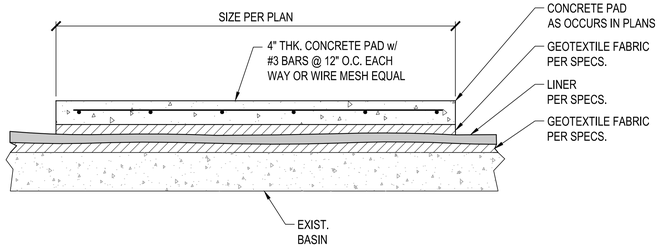

CONCRETE PAD OVER LINER 1"=1'-0" G

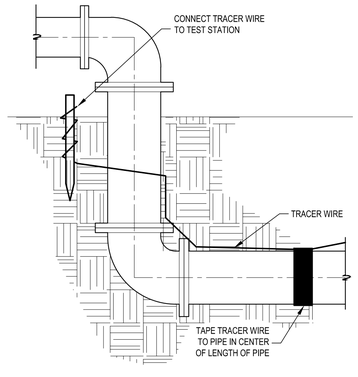

TRACER WIRE N.T.S. H

CONSTRUCTION NOTES

1. INSTALL CONCRETE COLLAR, CONTRACTOR SHALL CONTAIN A MIN. OF 6 1/2 SACKS OF CEMENT PER CUBIC YARD & ATTAIN A COMPRESSIVE STRENGTH OF 4,500 P.S.I. AFTER 28 DAYS IN ACCORDANCE W/ A.S.T.M. C39/C39M-99
2. INSTALL 6" SDR-35 P.V.C. PIPE & ELBOW FOR HEADER PIPE CLEANOUT. INSTALL 4" SDR-35 P.V.C. PIPE FOR PERFORATED PIPELINE CLEANOUT

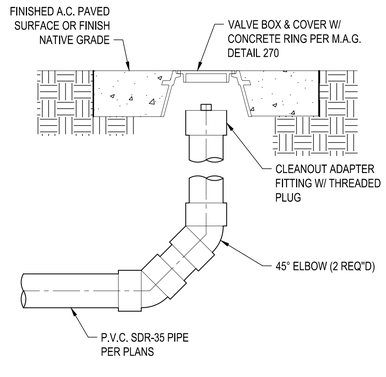

NOTE:
CLEANOUT RING & COVER SHALL BE RAISED TO FINISH GRADE & SUPPORT COLLAR INSTALLED AFTER PAVING OR FINISH GRADING HAS BEEN COMPLETED. CONTRACTOR SHALL COMPACT THE AREA UNDER CONCRETE COLLAR TO THE SATISFACTION OF THE ENGINEER BEFORE PLACING CONCRETE.

CLEANOUT N.T.S. I

100% ISSUED FOR BID

NO	BY	DATE	REVISIONS	DATE	APP.

THESE DRAWINGS ARE THE PROPERTY OF P.A.C.E. AND SHALL NOT BE REPRODUCED IN ANY MANNER NOR BE USED FOR CONSTRUCTION UNLESS STAMPED 'ISSUED FOR CONSTRUCTION'.

Registered Professional Engineer (Civil) CERTIFICATE NO. 70097 Timothy R. Pierce Signed ARIZONA, U.S.A. Expires 12/31/28

PREPARED BY:	PACE
DESIGNED BY:	NE
DRAWN BY:	DS, WW
CHECKED BY:	TP
SCALE:	AS NOTED
DATE	NOV 2025
JOB NO.	B614

TITLE
MECHANICAL DETAILS IV

JOB
TOWN OF JEROME
WASTEWATER
TREATMENT PLANT
YAVAPAI CO. AZ

PREPARED BY:
PACE
Advanced Water Engineering
8723 E. Via de Commercio, Suite 2, SCOTTSDALE, CA 85258
P: (480) 991-3995 | www.paceaz.com
TAYLOR B. PIERCE R.C.E 70097 DATE

SHEET
M8.3
49 OF 99 SHEETS

JOB NO. B614

W:\B614\Engineering\B614-30\sheets\B614 - M8.0 MECHANICAL DETAILS.dwg - Tab: M8.3 - by noddington on 02/23/26 at 12:41:49 PM

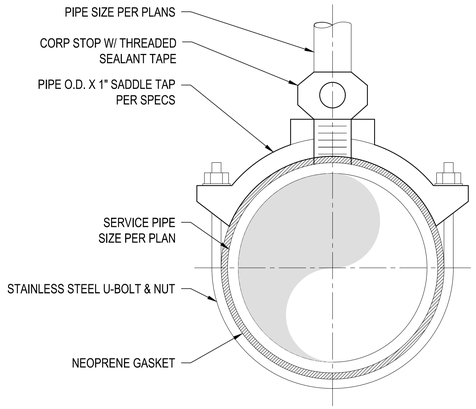

SADDLE TAP

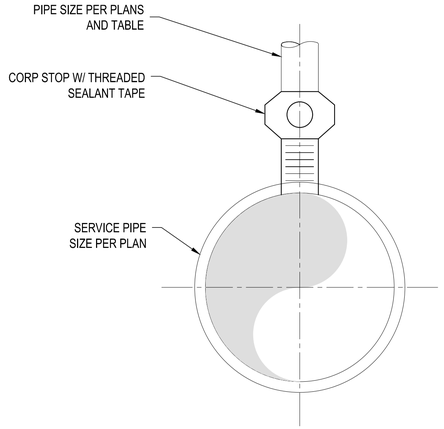

DIRECT TAP

SIZE (in.)	PRESSURE CLASS				
	150	200	250	300	350
	MAXIMUM RECOMMENDED DIRECT TAP SIZE (inch)				
3	-	-	-	-	3/4
4	-	-	-	-	3/4
6	-	-	-	-	1
8	-	-	-	-	1
10	-	-	-	-	1
12	-	-	-	-	1 1/4
14	-	-	1 1/4	1 1/2	1 1/2
16	-	-	1 1/2	2	2
18	-	-	2	2	2
20	-	-	2	2	2
24	-	2	2	2	2

PIPE TAP

N.T.S. **A**

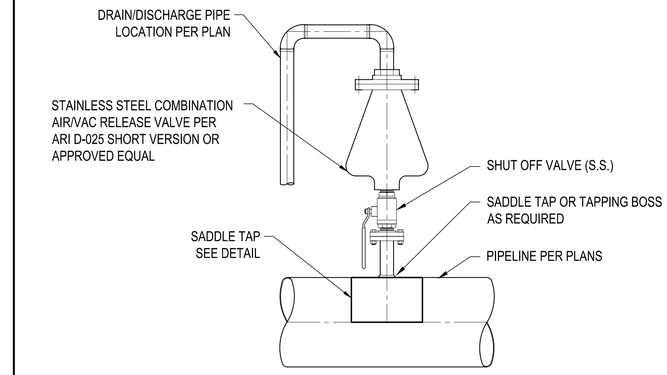

AIR/VAC RELEASE VALVE

N.T.S. **B**

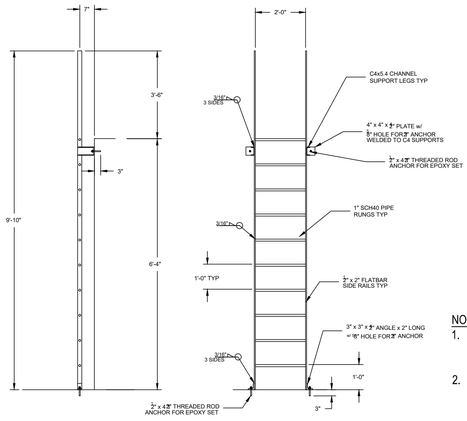

NOTES:
1. ALL MATERIALS SHALL BE CARBON STEEL.
2. ALL MATERIALS TO BE SHOP PRIMED W/ CARBOLINE 150 AFTER FABRICATION.

SHIP LADDER

N.T.S. **C**

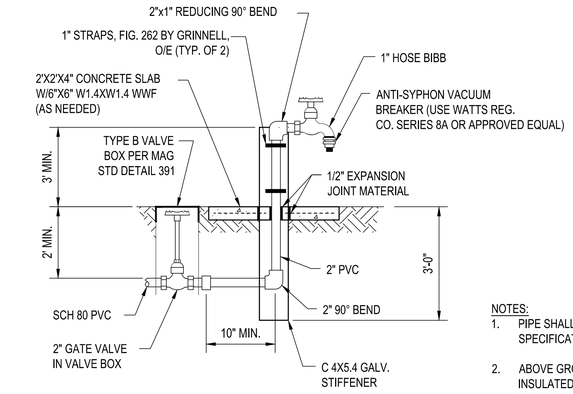

NOTES:
1. PIPE SHALL BE COLOR-CODED PER SPECIFICATIONS
2. ABOVE GROUND PIPING SHALL BE INSULATED PER SPECIFICATIONS. EXTEND INSULATION TO 12" BELOW GROUND.

HOSE BIB

N.T.S. **D**

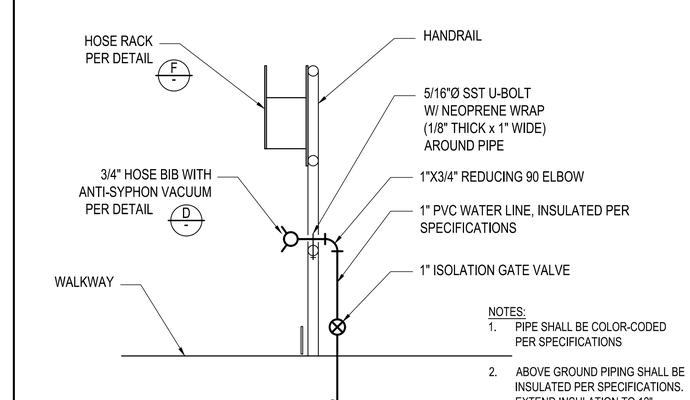

NOTES:
1. PIPE SHALL BE COLOR-CODED PER SPECIFICATIONS
2. ABOVE GROUND PIPING SHALL BE INSULATED PER SPECIFICATIONS. EXTEND INSULATION TO 12" BELOW GROUND.

RAIL MOUNTED HOSE VALVE

N.T.S. **E**

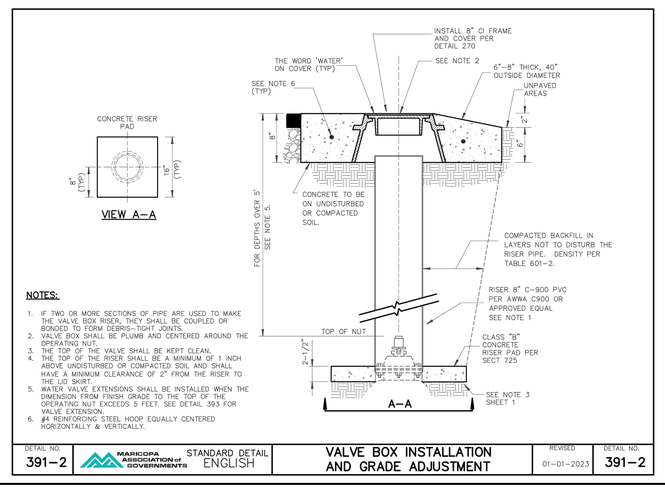

NOTES:
1. IF TWO OR MORE SECTIONS OF PIPE ARE USED TO MAKE THE VALVE BOX RISER, THEY SHALL BE COUPLED OR BONDED TO FORM DEBRIS-TIGHT JOINTS.
2. VALVE BOX SHALL BE PLUMB AND CENTERED AROUND THE OPERATING NUT.
3. THE TOP OF THE VALVE SHALL BE KEPT CLEAN.
4. THE TOP OF THE RISER SHALL BE A MINIMUM OF 1 INCH ABOVE UNDISTURBED OR COMPACTED SOIL AND SHALL HAVE A MINIMUM CLEARANCE OF 2" FROM THE RISER TO THE LID SKIRT.
5. WATER VALVE EXTENSIONS SHALL BE INSTALLED WHEN THE DIMENSION FROM FINISH GRADE TO THE TOP OF THE OPERATING NUT EXCEEDS 5 FEET. SEE DETAIL 393 FOR VALVE EXTENSION.
6. #4 REINFORCING STEEL HOOP EQUALLY CENTERED HORIZONTALLY & VERTICALLY.

DETAIL NO.		STANDARD DETAIL		REVISED	DETAIL NO.
391–2	MARICOPA ASSOCIATION of GOVERNMENTS	ENGLISH	VALVE BOX INSTALLATION AND GRADE ADJUSTMENT	01–01–2023	391–2

VALVE BOX

N.T.S. **F**

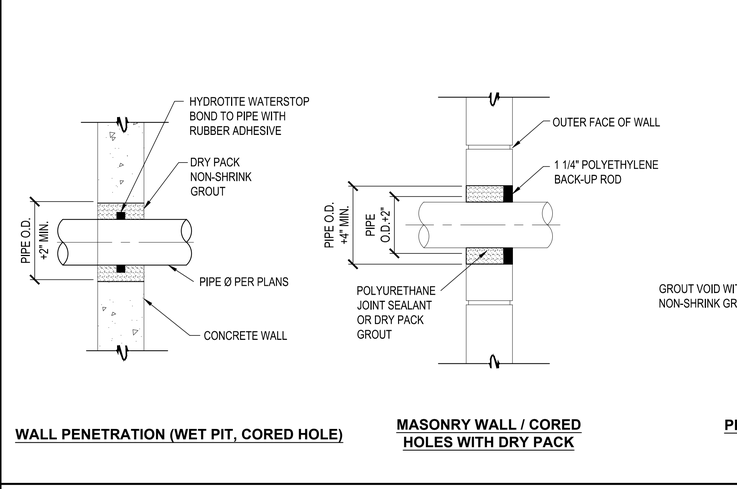

WALL PENETRATION (WET PIT, CORED HOLE)

MASONRY WALL / CORED HOLES WITH DRY PACK

PIPE SLEEVE W/ MODULAR SEAL

CORED HOLE W/ MODULAR SEAL

TABLE 1:

CORED HOLES	
PIPE SIZE NOMINAL	HOLE I.D.
1"	3"
1½"	3 1/2"
2"	4"
2½"	4"
3"	5"
4"	6"
5"	8"
6"	10"
8"	12"
10"	14"
12"	16"
14"	18"
16"	20"
18"	22"
20"	24"

PIPE PENETRATION DETAIL

N.T.S. **G**

NO	BY	DATE	REVISIONS	DATE	APP.

Registered Professional Engineer (Civil) CERTIFICATE NO. 70097 Nicholas E. Pierce Signed ARIZONA, U.S.A. Expires 12/31/28

PREPARED BY: PACE
DESIGNED BY: NE
DRAWN BY: DS, WW
CHECKED BY: TP
SCALE: AS NOTED
DATE: NOV 2025
JOB NO.: B614

MECHANICAL DETAILS V
TITLE

JOB TOWN OF JEROME WASTEWATER TREATMENT PLANT YAVAPAI CO. AZ

100% ISSUED FOR BID

PREPARED BY: TAYLOR B. PIERCE R.C.E 70097 DATE

PACE Advanced Water Engineering
8723 E. Via de Ventura, Suite 220, Scottsdale, CA 85258
P: (408) 991-3595 | www.pacewater.com

SHEET M8.4
50 OF 99 SHEETS
JOB NO. B614

THESE DRAWINGS ARE THE PROPERTY OF P.A.C.E. AND SHALL NOT BE REPRODUCED IN ANY MANNER NOR BE USED FOR CONSTRUCTION UNLESS STAMPED 'ISSUED FOR CONSTRUCTION'.

W:\B614\Engineering\B614-3\Sheets\B614 - M8.0 MECHANICAL DETAILS.dwg - Tab: M8.4 - by neddington on 02/22/26 at 12:41:49 PM

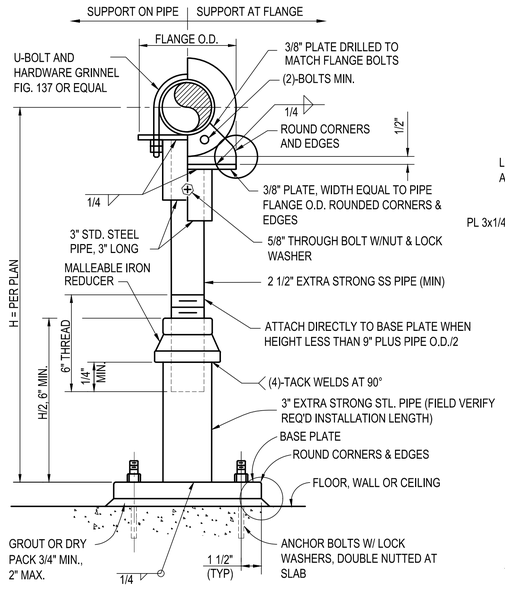

LOCATION	MEMBER	
	BASE PLATE	ANCHOR BOLTS
FLOOR	3/8 X 9 X 9	4-5/8"
CEILING	5/8 X 9 X 9	4-3/4"
WALL	5/8 X 9 X 9	4-3/4"

NOTES:
1. AS AN ALTERNATE, IF ADJUSTMENT IS NOT NECESSARY, DELETE 2 1/2" PIPE AND REDUCER AND WELD 3" STEEL PIPE DIRECTLY TO 3/8" PLATE ATTACHED TO PIPE FLANGE.
2. PIPE SUPPORT MAY BE ORIENTATED IN ANY DIRECTION.
3. FOR H > 3'-0", CONTRACTOR SHALL USE GRINNELL FIG. 264 AS APPROVED BY ENGINEER.

S1

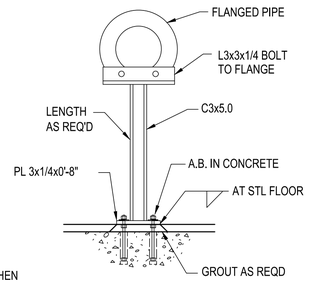

S2

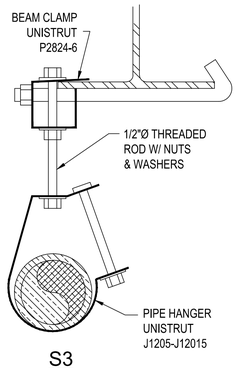

S3

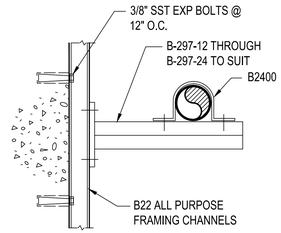

S4

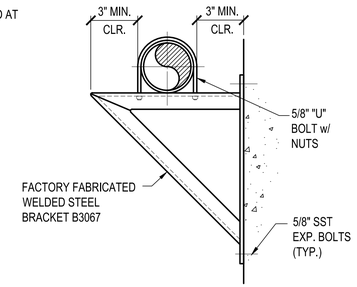

S5

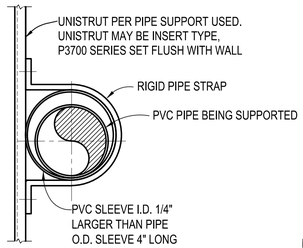

S6

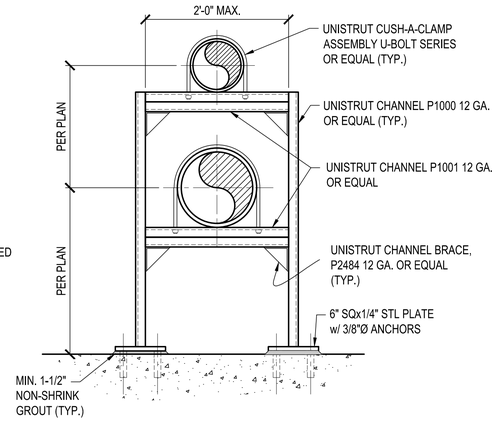

S7

GENERAL NOTES:

1. WHERE NO REFERENCE TO PIPE HANGERS OR SUPPORTS IS GIVEN ON THE DRAWINGS, THE CONTRACTOR SHALL USE THE APPROPRIATE HANGER OR SUPPORT SHOWN ON THIS DRAWING. MAXIMUM HANGER AND SUPPORT SPACING SHALL BE AS SHOWN IN SCHEDULE "A" ON THIS DRAWING. FIGURE NUMBERS ARE B-LINE, UNISTRUT OR GRINNELL.
2. ALL CONCRETE INSERTS, BRACKETS, CHANNELS, BOLTS, RODS, AND MISCELLANEOUS HARDWARE USED FOR PIPE HANGERS OR SUPPORTS SHALL BE 316 S.S., U.N.O.
3. CONCRETE CONTINUOUS INSERTS, B-LINE SERIES B52i, OR EQUAL, SHALL BE PROVIDED IN THE WALLS AND CEILINGS AS REQ'D OR AS NOTED ON THE DRAWINGS. INSERTS IN THE WALLS SHALL BE VERTICAL, UNLESS OTHERWISE NOTED AND SHALL BEGIN 6 INCHES ABOVE THE FLOOR AND END 6 INCHES BELOW THE CEILING. INSERTS IN THE CEILING SHALL BEGIN AND END 3 INCHES FROM WALLS AND BEAMS, WHERE PRACTICABLE. THE CENTERLINES OF WALL AND CEILING INSERTS SHALL ALIGN. MAXIMUM CENTER TO ENTER SPACING OF INSERTS SHALL BE 5'-0".
4. IN AREAS NOT COVERED UNDER NOTE 3, CONCRETE INSERTS SHALL BE B-LINE SERIES B3014N WITH APPROPRIATE NUT, B-LINE SERIES B521i CHANNEL EMBEDDED ANCHOR BOLTS, OR EQUAL. IN WITHOUT THE PRIOR WRITTEN APPROVAL OF THE ENGINEER (FOR EQUIPMENT LIFTING DEVICES, (SEE STRUCTURAL DRAWINGS).
5. SUPPORTS SHALL MEET MANUFACTURERS STANDARDIZATION SOCIETY OF THE VALVE AND FITTINGS INDUSTRY STANDARD PRACTICE SP58, LATEST EDITION.
6. HANGER BRACKET AND SUPPORT COMPONENTS MAY BE INTERCHANGED AS APPROVED BY THE ENGINEER.
7. TRAPEZE AND PIPE RACK COMPONENTS SHALL HAVE A MINIMUM STEEL THICKNESS OF 12 GAUGE. MAXIMUM DEFLECTION SHALL BE LIMITED TO 1/240 OF THE SPAN. CHANNEL COMPONENTS SHALL BE B-LINE SERIES B22 OR B22A, OR EQUAL.
8. CONCRETE INSERTS IN AREAS BELOW WATER SURFACE OR NORMALLY SUBJECT TO SUBMERGING SHALL BE EMBEDDED ANCHOR BOLTS, OR APPROVED EQUAL. IN NO CASE SHALL CONCRETE CONTINUOUS INSERTS BE USED IN THESE AREAS.
9. ALL PIPING, DUCTWORK, ACCESSORIES, APPURTENANCES, ETC. SHALL BE ANCHORED TO RESIST 200% OF THE APPLIED LOAD & A LATERAL SEISMIC FORCE OF 40 PERCENT OF ITS WEIGHT WITHOUT EXCESSIVE DEFLECTION.
10. CONTRACTOR SHALL VERIFY ALL SUPPORT DIMENSIONS AND LOCATIONS WITH APPROVED SHOP DRAWINGS FOR ITEMS BEING SUPPORTED BEFORE FABRICATION OR INSTALLATION OF SUPPORTS.

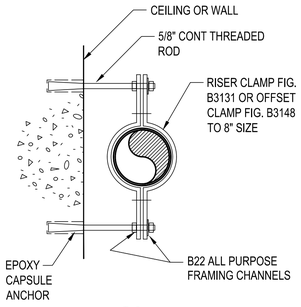

S8

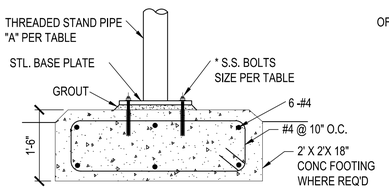

DIMENSIONS				
PIPE Ø SIZE	BOLT SIZE	STAND PIPE "A"	ADJ. PIPE "B"	FLANGE SUPPORT PLATE THK. "C"
4-12	1/2	3"	2 1/2"	1/4"
14-16	5/8	4"	3"	3/8"
18-36	7/8	6"	4"	3/8"

INSTALLATION NOTE:
PIPE SUPPORT SPACING, MATERIAL AND QUANTITY PER SPECS.

* BOLT EMBEDMENT DEPTH PER TABLE HEREON.

S1A

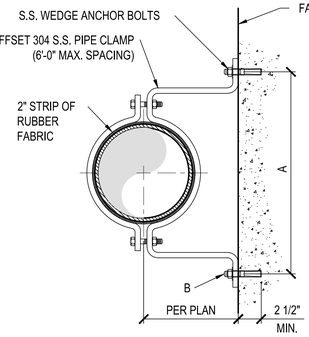

DIMENSIONS			
PIPE SIZE	A	HOLE SIZE B	BOLT SIZE
3	9 1/2	7/16	3/8
4	10 9/16	9/16	1/2
5	11 11/16	9/16	1/2
6	14 3/8	9/16	1/2
8	16 7/16	9/16	1/2
10	21 1/2	13/16	3/4
12	24 7/8	13/16	3/4
18	31	13/16	3/4
24	37	1 11/16	1

S9

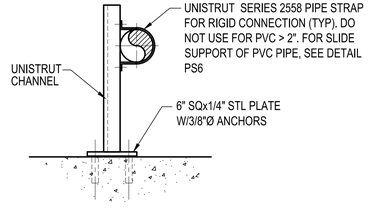

S12

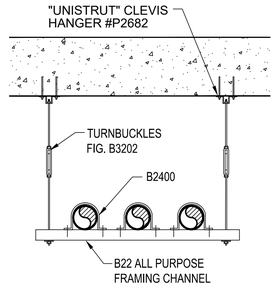

S10

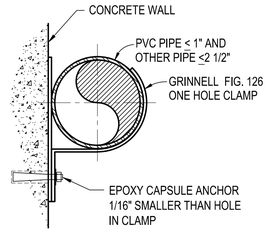

S11

SCHEDULE "A"

PIPE HANGER RODS AND SUPPORT SPACING

PIPE SIZE	ROD SIZE (INCHES)	MAX. SPAN (FT.) STEEL PIPE	COPPER PIPE	PVC PIPE	DUCTILE IRON PIPE	FIBERGLASS
UP TO 1"	3/8	6	5	5	-	-
1 1/4" TO 2"	3/8	10	8	5.5	10	-
2 1/2" TO 3 1/2"	1/2	10	8	6	10	-
4" TO 5"	5/8	10	-	8	10	-
6"	3/4	10	-	9	10	-
8" TO 12"	7/8	10	-	9	10	-
ABOVE 12"	1	10	-	9	10	-

BOLT DIAMETER	VERT BOLT EMBEDMENT LENGTH	HORIZ BOLT EMBEDMENT LENGTH	HEADED STUD FILLET WELD SIZE, "S".
1/2"	6"	4"	1/4"
5/8"	6"	4"	5/16"
3/4"	7"	5"	5/16"
7/8"	8"	6"	5/16"
1"	9"	7"	3/8"
1 1/8"	10"	8"	-----
1 1/4"	11"	9"	-----

TYP. ANCHOR AND EXPANSION BOLT SCHEDULE

NO	BY	DATE	REVISIONS	DATE	APP.

Registered Professional Engineer (Civil) CERTIFICATE NO. 70097 Timothy Pierce Signed 12/31/25 ARIZONA, U.S.A. Expires 12/31/26

THESE DRAWINGS ARE THE PROPERTY OF P.A.C.E. AND SHALL NOT BE REPRODUCED IN ANY MANNER NOR BE USED FOR CONSTRUCTION UNLESS STAMPED "ISSUED FOR CONSTRUCTION".

PREPARED BY: PACE
DESIGNED BY: NE
DRAWN BY: DS, WW
CHECKED BY: TP
SCALE: AS NOTED
DATE: NOV 2025
JOB NO.: B614

TITLE: MECHANICAL DETAILS VI

100% ISSUED FOR BID

PREPARED BY: TAYLOR B. PIERCE R.C.E. 70097 DATE

PACE
Advanced Water Engineering
8723 E. VIA de VENTURA, BLDG. A, SUITE 220 SCOTTSDALE, CA 85258
P: (480) 991-3955 | www.pacewater.com

JOB: TOWN OF JEROME WASTEWATER TREATMENT PLANT YAVAPAI CO. AZ

SHEET M8.5
51 OF 99 SHEETS

JOB NO. B614

PIPE SUPPORT DETAILS

N.T.S. A

W:\B614\Engineering\B614-30sheet\B614 - M8.0 MECHANICAL DETAILS.dwg - Tab: M8.5 - by neddington on 02/22/26 at 12:41:49 PM

GENERAL STRUCTURAL NOTES

APPLY UNLESS NOTED OTHERWISE

PK ASSOCIATES, LLC
6900 E. Belleview Ave. #200
Greenwood Village, Colorado 80111
Phone: (720) 799-1058
Email: cadd@pkastructural.com
Website: www.pkastructural.com

BUILDING CODE:

2012 EDITION OF THE INTERNATIONAL BUILDING CODE WITH TOWN OF JEROME AMENDMENTS.

LOADS:

ROOF LIVE LOAD = 20 PSF (REDUCIBLE).
TOTAL ROOF DEAD LOAD = 20 PSF.
GROUND SNOWLOAD = 20 PSF.
ROOF SNOW = 18.5 PSF.

WIND:

THE STRUCTURE AND ITS COMPONENTS ARE DESIGNED FOR WIND LOADS AS DEFINED BY THE BUILDING CODE, WHERE:

BASIC WIND SPEED 120 MPH.
RISK CATEGORY: III.
WIND EXPOSURE: C.
VELOCITY PRESSURE, qz = 23.7 PSF AT h = 12' FT. (MEAN ROOF HEIGHT). DESIGN WIND PRESSURES COMPONENTS AND CLADDING:

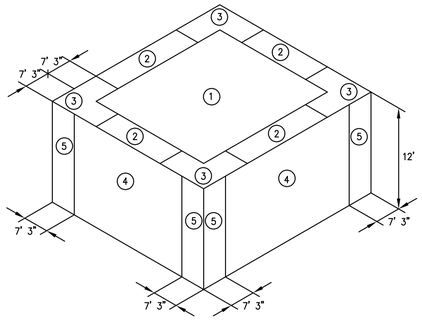

*PRESSURES SHOWN ARE ULTIMATE. MULTIPLY BY 0.6 FOR SERVICE LEVEL PRESSURES.

LOCATION	ZONE	EFFECTIVE WIND AREA (SF)	DESIGN WIND PRESSURE (PSF)*	
ROOF	1	10	+16.0	−54.9
		20	+16.0	−50.9
		50	+16.0	−45.6
		100	+16.0	−41.6
	2	10	+16.0	−74.2
		20	+16.0	−69.1
		50	+16.0	−62.3
		100	+16.0	−57.1
	3	10	+16.0	−103.3
		20	+16.0	−93.0
		50	+16.0	−79.4
		100	+16.0	−69.1
WALLS	4	10	+31.1	−30.4
		20	+29.1	−29.1
		50	+26.3	−27.2
		100	+24.2	−25.8
		500	+19.4	−22.6
	5	10	+31.1	−63.7
		20	+29.1	−58.1
		50	+26.3	−50.8
		100	+24.2	−45.2
		500	+19.4	−32.3
PARAPET	INTERIOR	10	+103.3	−58.1
		50	+88.6	−53.5
		100	+81.4	−50.0
	EXTERIOR	10	+132.4	−87.2
		50	+105.7	−77.0
		100	+93.3	−69.4

ZONE1: INTERIOR AREA OF ROOF AWAY FROM BUILDING EXTERIOR WALLS.
ZONE2: ROOF AREAS WITHIN 7'−3" OF EXTERIOR WALLS.
ZONE3: ROOF AREAS WITHIN 7'−3" OF BUILDING CORNERS.
ZONE4: EXTERIOR WALLS AWAY FROM BUILDING CORNERS.
ZONE5: EXTERIOR WALLS WITHIN 7'−3" OF BUILDING CORNERS.
−DESIGN WIND PRESSURES − PLUS AND MINUS SIGNS SIGNIFY PRESSURE ACTING TOWARD AND AWAY FROM EXTERIOR SURFACE.
−LINEAR INTERPOLATION BETWEEN VALUES OF TRIBUTARY AREA IS PERMISSIBLE.

SEISMIC:

RISK CATEGORY = III.
SEISMIC IMPORTANCE FACTOR: Ie = 1.25.
DESIGN CATEGORY = B.
SITE CLASS C.
SS = 0.31, S1 = 0.097, R = 3.5.
Sds = 0.269, Sd1 = 0.097.
BASIC SEISMIC−FORCE−RESISTING SYSTEM (INTERMEDIATE REINFORCED MASONRY SHEAR WALLS).
ANALYSIS PROCEDURE USED (EQUIVALENT LATERAL FORCE PROCEDURE).
CS = 0.096 (FACTORED).

FOUNDATIONS:

SOIL REPORT BY WESTERN TECHNOLOGIES INC; JOB NO.2522JW197; DATED OCTOBER 25, 2022; SPREAD FOOTINGS SHALL BEAR ON FIRM, UNDISTURBED SOIL AT BELOW GRADE TANKS AND 1' OF 2 SACK SLURRY AT GRADE. IN ACCORDANCE WITH THE ABOVE REPORT, BOTTOM OF FOOTING TO BE 2'0" MINIMUM BELOW FINISHED GRADE. (THESE FOOTING DEPTHS ARE MINIMUMS AND THE CONTRACTOR SHALL COORDINATE WITH SOILS REPORT AND OTHER TRADES TO ENSURE THESE MINIMUMS ARE SUFFICIENT FOR THE WORK.) FINISHED GRADE IS DEFINED AS TOP OF SLAB FOR INTERIOR FOOTINGS AND LOWEST ADJACENT GRADE WITHIN 5 FEET FOR PERIMETER FOOTINGS. DESIGN SOIL BEARING VALUE = 2500 PSF. FOUNDATION EXCAVATIONS SHALL BE INSPECTED BY SOILS ENGINEER PRIOR TO PLACEMENT OF CONCRETE.

CONCRETE:

MINIMUM 28 DAY STRENGTH 5,000 PSI EXCEPT AS FOLLOWS: (TYPE II, U.N.O.)

WALLS ---------- 5,000 PSI
MILD REINFORCED SLAB ---------- 5,000 PSI
FOUNDATIONS ---------- 5,000 PSI

MECHANICALLY VIBRATE ALL CONCRETE WHEN PLACED, EXCEPT THAT SLABS ON GRADE NEED BE VIBRATED ONLY AROUND UNDER−FLOOR DUCTS, ETC. MAXIMUM SLUMP 4 1/2" FOR CONCRETE WITHOUT PLASTICIZER. IF PLASTICIZER IS USED, A HIGHER FINAL SLUMP MAY BE ALLOWED UPON STRUCTURAL ENGINEER'S APPROVAL. CAST CLOSURE POUR AROUND COLUMNS AFTER COLUMN DEAD LOAD IS APPLIED. UNLESS APPROVED OTHERWISE IN WRITING BY THE ARCHITECT, ALL CONCRETE SLABS ON GRADE SHALL BE BOUND BY CONTROL JOINTS (KEYED OR SAW CUT), SUCH THAT THE ENCLOSED AREA DOES NOT EXCEED 225 SQUARE FEET. KEYED CONTROL JOINTS NEED ONLY OCCUR AT EXPOSED EDGES DURING POURING, ALL OTHER JOINTS MAY BE SAW CUT. CONTRACTOR SHALL SUBMIT PROPOSED LOCATIONS FOR APPROVAL PRIOR TO CONSTRUCTION.

REINFORCING:

ASTM A615 (FY = 60 KSI) DEFORMED BARS FOR ALL BARS. ALL GRADE 60 REINFORCING TO BE WELDED SHALL BE ASTM A706. WELDED WIRE FABRIC PER ASTM A185, WIRE PER ASTM A82. NO TACK WELDING OF REINFORCING BARS ALLOWED WITHOUT PRIOR REVIEW OF PROCEDURE WITH THE STRUCTURAL ENGINEER. LATEST ACI CODE AND DETAILING MANUAL APPLY. CLEAR CONCRETE COVERAGES AS FOLLOWS UNLESS NOTED OTHERWISE IN THE CONCRETE FIRE RATING TABLE:

CAST AGAINST AND PERMANENTLY EXPOSED TO EARTH ---------- 3"
EXPOSED TO EARTH OR WEATHER
#6 OR LARGER ---------- 2"
#5 AND SMALLER ---------- 1 1/2"
FLAT SLAB ---------- 3/4"
ALL OTHER PER LATEST EDITION OF ACI 318.

LAP SPLICES IN CONCRETE:

LAP SPLICES, UNLESS NOTED OTHERWISE, SHALL BE CLASS "B" TENSION LAP SPLICES PER LATEST EDITION OF ACI 318. LAP SPLICES IN CONCRETE COLUMNS SHALL BE TENSION LAP SPLICES. STAGGER SPLICES A MINIMUM OF ONE LAP LENGTH. LAPS IN WELDED WIRE FABRIC SHALL BE MADE SO THAT THE OVERLAP, MEASURED BETWEEN OUTERMOST CROSS WIRES OF EACH FABRIC SHEET, IS NOT LESS THAN THE SPACING OF CROSS WIRES PLUS 2 INCHES. ALL WELDED WIRE FABRIC SHALL BE CHAIRED TO ENSURE PROPER CLEARANCES.

ALL SPLICE LOCATIONS SUBJECT TO APPROVAL BY THE STRUCTURAL ENGINEER. PROVIDE BENT CORNER BARS TO MATCH AND LAP WITH HORIZONTAL BARS AT ALL CORNERS AND INTERSECTIONS PER TYPICAL DETAILS. REINFORCING BAR SPACING GIVEN ARE MAXIMUM ON CENTERS. ALL BARS PER CRSI SPECIFICATIONS AND HANDBOOK. DOWEL ALL VERTICAL REINFORCING TO FOUNDATION WITH STANDARD 90−DEGREE HOOKS UNLESS NOTED OTHERWISE. SECURELY TIE ALL BARS IN LOCATION BEFORE PLACING CONCRETE.

MASONRY:

MECHANICALLY VIBRATE GROUT IN VERTICAL SPACES IMMEDIATELY AFTER POURING AND AGAIN ABOUT 5 MINUTES LATER. PROVIDE CLEANOUTS IF GROUT LIFT EXCEEDS 4'−0" IN BLOCK WALLS. MAXIMUM GROUT LIFT SHALL BE 8'−0". UNLESS NOTED OTHERWISE ON THE PLANS, PLACE CONTROL JOINTS IN MASONRY WALLS SUCH THAT NO STRAIGHT RUN OF WALL EXCEEDS 24'−0". CONTROL JOINTS SHALL NOT OCCUR WITHIN 8'−0" OF WALL CORNERS, INTERSECTIONS, ENDS, WITHIN 24" OF CONCENTRATED POINTS OF BEARING OR JAMBS, OR OVER OPENINGS UNLESS SPECIFICALLY SHOWN ON THE STRUCTURAL DRAWINGS. ALL MASONRY BELOW FINISHED FLOOR OR GRADE SHALL BE GROUTED SOLID. LAP SPLICES SHALL BE AS FOLLOWS:

BAR SIZE	#3	#4	#5	#6	#7	#8	#9
BAR LAPS (INCHES)	27	36	45	54	63	72	81

HOLLOW CONCRETE MASONRY UNITS SHALL CONFORM TO ASTM C90, NORMAL WEIGHT, RUNNING BOND, MORTAR TYPE S (1800 PSI), COMPRESSIVE STRENGTHS AS FOLLOWS:

F'M(PSI)	UNIT STRENGTH, NET (PSI)	GROUT (PSI)	LOCATION
2000	2000	2000	TYPICAL U.N.O.

VERTICAL REINFORCING:

1 #5 IN CENTER OF GROUT AT CENTER OF WALL, CONTINUOUS FULL HEIGHT OF WALL AT ALL CORNERS, INTERSECTIONS, WALL ENDS, BEAM BEARINGS, JAMBS, EACH SIDE OF CONTROL JOINTS AND AT INTERVALS NOT TO EXCEED 48" O.C. UNLESS NOTED OTHERWISE. TIE AT 8'−0" VERTICALLY, WITH SINGLE WIRE LOOP TIE BY A.A. WIRE PRODUCTS COMPANY. LAP SPLICES SHALL BE AS PER SCHEDULE UNDER "MASONRY" SECTION. DOWEL ALL VERTICAL REINFORCING TO FOUNDATION WITH DOWELS TO MATCH VERTICAL REINFORCING.

HORIZONTAL REINFORCING:

2 #5 IN MINIMUM 8" DEEP GROUTED CONTINUOUS BOND BEAM AT (ELEVATED FLOORS AND) ROOFLINE. 1 #5 IN MINIMUM 8" DEEP GROUTED CONTINUOUS BOND BEAM AT TOP OF PARAPET OR TOP OF A FREESTANDING WALL AND AT BOTTOM OF WALL. USE 1 #4 HORIZONTAL BOND BEAM AT 48" O.C. VERTICALLY SPACED FOR ALL WALLS WITHOUT RUNNING BOND (STACKED BOND). PLACE THESE BARS CONTINUOUS THRU CONTROL JOINTS PER TYPICAL DETAIL. PROVIDE BENT BARS PER TYPICAL DETAILS, TO MATCH HORIZONTAL BOND BEAM REINFORCING, AT CORNERS AND WALL INTERSECTION TO MAINTAIN BOND BEAM CONTINUITY. LAP SPLICES SHALL BE AS PER SCHEDULE UNDER "MASONRY" SECTION. DO NOT SPLICE WITHIN 8'−0" OF CONTROL JOINTS. USE STANDARD WEIGHT (NO. 9 GAGE WIRE) DUR−O−WAL OR DUR−O−WIRE (OR EQUIVALENT) LADDER TYPE JOINT REINFORCEMENT AT 16" O.C. IN MASONRY WALLS.

ANCHOR BOLTS:

ALL ANCHOR BOLTS SHALL BE ASTM F1554 GRADE 36 (WELDABLE), U.N.O., WHEN SPECIFIED ON PLAN, ALL ASTM F1554 GRADE ANCHOR BOLTS SHALL BE 511 (WELDABLE) ANCHOR BOLTS.

MAY BE BENT IN FIELD PER AISC REQUIREMENTS TO FIX DAMAGED ANCHOR BOLTS; FIELD BENT IS LIMITED TO 45° OR LESS. ANCHOR BOLTS CAN HAVE HEADED OR HOOKED BOLTS SHAPES. USE HEADED ANCHOR BOLTS WHERE ANCHOR BOLT SHAPE IS NOT SPECIFIED. ANCHOR BOLTS SHALL BE INSPECTED PER SPECIAL INSPECTION TABLE REQUIREMENTS.

STRUCTURAL STEEL:

STEEL SETIONS − MINIMUM GRADE AND STRENGTH

STEEL WIDE FLANGES	= ASTM A992 (50KSI)
STEEL CHANNELS	= ASTM A36 (36KSI)
STEEL ANGLES	= ASTM A36 (36KSI)
STEEL COLUMN BASE PLATES	= ASTM A992 (50KSI)
STEEL PLATES AT MOMENT FRAME AND BRACED FRAME CONNECTIONS	= ASTM A992 (50KSI)
STEEL PLATES (MISCELLLANEOUS)	= ASTM A36 (36KSI)
STEEL HSS (RECTANGLE)	= ASTM A500 (46KSI)
STEEL HSS (ROUND)	= ASTM A500 (42KSI)
STEEL PIPES	= ASTM A501 (36KSI) − OR − ASTM A53 (35KSI), TYPE E OR S

NOTE: ALL 36KSI STEEL MAY BE SUBSTITUTED WITH 50KSI STEEL UNLESS NOTED OTHERWISE.

ALL CONSTRUCTION PER LATEST AISC HANDBOOK. ALL REFERENCE TO HEADED STUDS SHALL BE HIGH STRENGTH HEADED STUDS. ATTACHMENT OF HEADED STUDS SHALL CONFORM TO ALL REQUIREMENTS OF THE LATEST EDITION OF THE "RECOMMENDED PRACTICES FOR STUD WELDING" AND THE "STRUCTURAL WELDING CODE" PUBLISHED BY AWS. ALL BOLTS, ANCHOR BOLTS, EXPANSION BOLTS, ETC. SHALL BE INSTALLED WITH STEEL WASHERS AT SLOTTED HOLES IN STEEL SECTIONS. ALL WELDING SHALL BE PERFORMED BY WELDERS HOLDING VALID CERTIFICATES AND HAVING CURRENT EXPERIENCE IN THE TYPE OF WELD SHOWN ON THE DRAWINGS OR NOTES. CERTIFICATES SHALL BE THOSE ISSUED BY AN ACCEPTED TESTING AGENCY. ALL WELDING DONE BY E70 SERIES LOW HYDROGEN RODS UNLESS NOTED OTHERWISE. FOR GRADE 60 REINFORCING BARS, USE E90 SERIES. ALL WELDING PER LATEST AMERICAN WELDING SOCIETY STANDARDS, (EXCEPT STEEL JOISTS AND JOIST GIRDERS SHALL COMPLY WITH SJI STANDARDS). THESE DRAWINGS DO NOT DISTINGUISH BETWEEN SHOP AND FIELD WELDS; THE CONTRACTOR MAY SHOP WELD OR FIELD WELD AT HIS DISCRETION. SHOP WELDS AND FIELD WELDS SHALL BE SHOWN ON THE SHOP DRAWINGS SUBMITTED FOR REVIEW. ALL FULL (COMPLETE) PENETRATION WELDS SHALL BE TESTED AND CERTIFIED BY AN INDEPENDENT TESTING LABORATORY. WHEN STRUCTURAL STEEL IS FURNISHED TO A SPECIFIED MINIMUM YIELD POINT GREATER THAN 36 KSI, THE ASTM OR OTHER SPECIFICATION DESIGNATION SHALL BE INCLUDED NEAR THE ERECTION MARK ON EACH SHIPPING ASSEMBLY OR IMPORTANT CONSTRUCTION COMPONENT, OVER ANY SHOP COAT OF PAINT, PRIOR TO SHIPMENT FROM THE FABRICATOR'S PLANT. STRUCTURAL STEEL COMPONENTS, AND FASTENERS AT ALL EXTERIOR CONDITIONS SHALL BE GALVANIZED OR PROTECTED AGAINST CORROSION USING APPROVED METHOD PUBLISHED BY AISC OR ANSI. WELDS ON GALVANIZED STEEL SHALL FOLLOW AWS D−19.0 SPECIFICATIONS.

STRUCTURAL BOLTS:

ALL STRUCTURAL BOLTS SHALL BE ASTM F3125 GRADE A325 TYPE 1 AND SHALL BE INSTALLED AS BEARING−TYPE CONNECTIONS WITH THREADS INCLUDED IN SHEAR PLANE (I.E. A TYPE "N" CONNECTION) UNLESS NOTED OTHERWISE. USE A325 TYPE 3 BOLTS AT ALL CONNECTIONS EXPOSED TO WEATHERING. USE SC (SLIP CRITICAL) AT ALL MOMENT FRAMES AND BRACED FRAMES. USE ASTM A354 BOLTS WHERE THE BOLT LENGTH REQUIRED FOR THE CONNECTION EXCEEDS THE MINIMUM LENGTH OF AN A325 BOLT. BOLTS MAY BE TIGHTENED USING ANY AISC APPROVED METHOD. ALL STRUCTURAL BOLTING SHALL BE INSPECTED BY AN INDEPENDENT TESTING LABORATORY TO ENSURE BOLT TENSION.

STEEL GRATING:

UNLESS NOTED OTHERWISE IN ARCHITECTURAL SPECIFICATIONS, USE PAINTED (GALVANIZED) STEEL GRATING WITH 2 1/2" X 3/16" BEARING BARS AT 1 3/16" O.C. AND CROSSBARS AT 4" O.C. GRATING SHALL BE ERECTED AND ATTACHED PER MANUFACTURER'S RECOMMENDATIONS.

ROOF DECK:

DECK SHALL BE 1 1/2" DEEP, 36" WIDE, 20 GAGE GALVANIZED STEEL, WITH MINIMUM YIELD STRESS OF 50 KSI, WITH MINIMUM S = 0.237 IN3 AND I = 0.231 IN4 PER FOOT OF WIDTH. DECK SHALL BE ERECTED IN ACCORDANCE WITH MANUFACTURER'S RECOMMENDATIONS AS 1 SPAN MINIMUM AND SHALL BE ATTACHED FOR A MINIMUM DIAPHRAGM SHEAR CAPACITY OF 650 PLF USING THE FOLLOWING MINIMUM ATTACHMENTS:

WELD DECK TO SUPPORTING MEMBERS WITH 4 − 5/8" DIAMETER OR 3/8" X 1" PUDDLE WELDS PER SHEET AT ENDS, END LAPS AND AT INTERMEDIATE SUPPORTS, AND AT 24" O.C. AT PERIMETER BEAMS AND OPENING EDGES RUNNING PARALLEL TO THE DECK. SIDE SEAM ATTACHMENT SHALL BE VSC2 AT 24" O.C.

CONSTRUCTION JOINTS:

ALL CONSTRUCTION JOINTS IN WALLS SHALL BE KEYED IN ACCORDANCE WITH THE TYPICAL CONSTRUCTION JOINT DETAILS SHOWN ON THE STRUCTURAL DRAWINGS OR, AT THE CONTRACTOR'S OPTION, SHALL BE INTENTIONALLY ROUGHENED IN ACCORDANCE WITH THE FOLLOWING: THE SURFACE OF ROUGHENED JOINTS SHALL BE SAND BLASTED OR ROUGHENED WITH A CHIPPING HAMMER TO EXPOSE THE AGGREGATE EMBEDDED IN THE PREVIOUS POUR. THE EXPOSED AGGREGATE SHALL PROTRUDE A MINIMUM OF 1/4 INCH. ALL SURFACES OF CONSTRUCTION JOINTS SHALL BE CLEANED AND LAITANCE REMOVED. IMMEDIATELY BEFORE NEW CONCRETE IS PLACED, ALL CONSTRUCTION JOINTS SHALL BE WETTED AND STANDING WATER REMOVED. VERTICAL CONSTRUCTION JOINTS IN WALLS SHALL BE HELD TO A MAXIMUM SPACING OF 60'−0". ALL CONSTRUCTION JOINTS IN SLABS, JOISTS, BEAMS, AND GIRDERS SHALL BE OFFSET A DISTANCE EQUAL TO TWICE THE WIDTH OF THE BEAM.

ACCORDANCE WITH THE TYPICAL SLAB ON DECK CONSTRUCTION JOINT DETAIL SHOWN ON THE STRUCTURAL DRAWINGS. BEAMS AND GIRDERS HAVE BEEN DESIGNED ASSUMING THE CONSTRUCTION JOINTS TO BE LOCATED IN THE MIDDLE THIRD OF THE BEAM, GIRDER, OR SLAB SPAN. ALL CONSTRUCTION, CONTROL, AND ISOLATION JOINTS FOR SLABS ON GRADE SHALL BE IN ACCORDANCE WITH THE TYPICAL SLAB ON GRADE DETAILS. THE CONTRACTOR SHALL SUBMIT THE PROPOSED LOCATIONS OF CONSTRUCTION JOINTS TO THE ENGINEER FOR ACCEPTANCE BEFORE STARTING CONSTRUCTION.

ELECTRICAL CONDUIT IN CONCRETE SLABS:

ELECTRICAL CONDUIT SHALL BE RIGID STEEL CONDUIT OR FLEXIBLE PLASTIC CONDUIT. ALUMINUM CONDUIT IS PROHIBITED. CONDUIT WITH A MAXIMUM OUTSIDE DIAMETER OF 1/6 TIMES THE SLAB THICKNESS MAY BE EMBEDDED IN ONE LAYER AT THE MID−DEPTH OF SLABS. MINIMUM CLEAR DISTANCE BETWEEN CONDUITS SHALL BE 3 TIMES CONDUIT DIAMETER. CONDUIT SHALL BE FIRMLY CHAIRED AND TIED TO PREVENT DISPLACEMENT DURING POURING. PLACE #3 AT 12 INCHES O.C. ADDITIONAL REINFORCING ABOVE AND BELOW, PERPENDICULAR TO THE CONDUIT. THE ADDED REINFORCING SHALL EXTEND 1'−0" PAST THE CONDUIT ON BOTH SIDES. FOR CONDUIT PLACED IN SLABS ON METAL DECKING, CONDUIT SHALL RUN IN THE METAL DECK FLUTES PER THE TYPICAL CONDUIT IN SLAB ON METAL DECK DETAIL.

CONCRETE INSERTS:

THIN SLAB TYPE INSERTS SHALL BE GALVANIZED AND HAVE THE FOLLOWING MINIMUM WORKING LOADS(A 4:1 RATIO OF ULTIMATE TO WORKING VALUES IS ASSUMED):

BOLT DIAMETER	WORKING LOAD SHEAR	TENSION
1/2"	1,000 LBS.	650 LBS.
5/8"	1,250 LBS.	700 LBS.
3/4"	1,600 LBS.	850 LBS.

COIL LOOP INSERTS SHALL BE GALVANIZED AND HAVE THE FOLLOWING MINIMUM WORKING LOADS(A 3:1 RATIO OF ULTIMATE TO WORKING VALUES IS ASSUMED):

BOLT DIAMETER	WORKING LOAD SHEAR	TENSION
1/2"	2,200 LBS.	2,820 LBS.
5/8"	3,000 LBS.	3,620 LBS.
3/4"	3,100 LBS.	3,660 LBS.

THREADED COIL RODS, COIL NUTS, ETC., USED IN CONJUNCTION WITH CONCRETE INSERTS, SHALL HAVE A WORKING LOAD EQUAL TO OR GREATER THAN THE CORRESPONDING CONCRETE INSERT. CONTRACTOR SHALL SUBMIT MANUFACTURER'S SIZE AND STRENGTH DATA PRIOR TO CONSTRUCTION TO THE STRUCTURAL ENGINEER THRU THE ARCHITECT. VALUES LISTED ABOVE ARE FOR RICHMOND STRUCTURAL CONNECTION INSERTS.

EXPANSION AND SCREW ANCHORS:

USE STUD TYPE EXPANSION ANCHOR WITH A SINGLE PIECE WEDGE ONLY WHERE NOTED ON PLANS. IF USE IS REQUESTED FOR OTHER THAN WHERE NOTED CONTACT STRUCTURAL ENGINEER THROUGH ARCHITECT FOR APPROVAL.

CONTRACTOR SHALL SUBMIT MANUFACTURER'S SIZE AND STRENGTH DATA TO ENGINEER THROUGH ARCHITECT PRIOR TO CONSTRUCTION. INSTALL ALL BOLTS AS OUTLINED IN MANUFACTURER'S SPECIFICATIONS, UTILIZING PROPER SIZE AND TYPE OF DRILL, CLEANING HOLE, DRIVING AND TIGHTENING BOLT.

IN CONCRETE:

ANCHORS USED MUST HAVE ICC APPROVAL AND INCLUDE HILTI KWIK BOLT TZ2 (ESR−4266), AND SIMPSON STRONG BOLT−2 (ESR−3037), AND DEWALT POWER−STUD+SD2 (ESR−2502), AND SIMPSON TITEN HD (ESR−2713), HILTI KWIK HUS−EZ (ESR−3027), AND DEWALT SCREW−BOLT+ (ESR−3889) OR APPROVED EQUAL.

IN MASONRY:

ANCHORS USED MUST HAVE ICC APPROVAL AND INCLUDE HILTI KWIK BOLT 3 (ESR−1385), AND SIMPSON STRONG BOLT−2 (ES−240), DEWALT POWER−STUD+SD1 (ESR−2966), HILTI KWIK HUS−EZ (ESR−3056) AND SIMPSON TITEN HD (ESR−1056), AND DEWALT SCREW−BOLT+ (ESR−4042) OR APPROVED EQUAL.

EPOXY ANCHORS IN CONCRETE AND MASONRY:

INJECTABLE ADHESIVE SHALL BE USED FOR INSTALLATION OF REINFORCING STEEL DOWELS OR THREADED ANCHOR RODS AND INSERTS INTO NEW OR EXISTING CONCRETE OR SOLID GROUTED CONCRETE MASONRY UNITS ONLY WHERE SPECIFIED ON PLANS. IF USE IS REQUESTED FOR OTHER THAN WHERE NOTED CONTACT STRUCTURAL ENGINEER THROUGH ARCHITECT FOR APPROVAL. ADHESIVE SHALL BE FURNISHED IN SIDE BY SIDE PACKS WHICH KEEP COMPONENT A AND COMPONENT B SEPARATE. USE ONLY INJECTION TOOLS AND STATIC MIXING NOZZLES RECOMMENDED BY MANUFACTURER. MANUFACTURER'S INSTRUCTIONS SHALL BE FOLLOWED.

IN CONCRETE:

ANCHORS USED MUST HAVE I.C.C. APPROVAL IN CRACKED CONCRETE AND INCLUDE SIMPSON SET−XP (ESR−2508), HILTI HIT−RE500−V3 (ESR−3814), DEWALT PURE110+ (ESR−3298) OR APPROVED EQUIVALENT. THE USE OF ANY EPOXY ANCHOR MUST BE APPROVED BY THE ENGINEER OF RECORD PRIOR TO INSTALLATION.

IN MASONRY:

ANCHORS USED MUST HAVE ICC APPROVAL AND INCLUDE SIMPSON SET (ESR−1772) AND HILTI HIT−HY 270 MAX (ESR−4143) AND DEWALT AC100+GOLD (ESR−3200) OR APPROVED EQUIVALENT. THE USE OF ANY EPOXY ANCHOR MUST BE APPROVED BY THE ENGINEER OR RECORD PRIOR TO INSTALLATION.

1. ADHESIVE ANCHORS INSTALLED IN HORIZONTAL TO VERTICALLY OVERHEAD ORIENTATION TO SUPPORT SUSTAINED TENSION LOADS SHALL BE DONE BY A CERTIFIED ADHESIVE ANCHOR INSTALLER (AAI) AS CERTIFIED THROUGH ACI (ACI 318−11 D.9.2.2) / (ACI 318−14 17.8.2.2) / (ACI 318−19 17.2.3) PROOF OF CURRENT CERTIFICATION SHALL BE SUBMITTED TO THE ENGINEER FOR APPROVAL PRIOR TO COMMENCEMENT OF INSTALLATION.
2. ADHESIVE ANCHORS MUST BE INSTALLED IN CONCRETE AGED A MINIMUM OF 21 DAYS (ACI 318−11 D.2.2) / (ACI 318−14 17.1.2) / (ACI 318−19 17.2.2).
3. THE REMOVAL AND RESETTING OF POST INSTALLED ANCHORS IS PROHIBITED (ACI 318−19 17.3.1).
4. PROVIDE SPECIAL INSPECTION FOR ALL MECHANICAL AND ADHESIVE ANCHORS PER THE APPLICABLE BUILDING CODE AND PER THE CURRENT ICC−ES REPORT (IBC 2012, 2015, 2018 TABLE 1705.3 TYPE 4, NOTE B).

STRUCTURAL FILL:

ALL FILL PLACED TO SUPPORT SLABS ON GRADE, BEHIND PERMANENT WALLS, AND AROUND ALL DRAINS SHALL CONSIST OF WELL GRADED, GRANULAR MATERIAL PER THE SPECIFICATIONS. SOILS FOR STRUCTURAL FILL SHALL BE APPROVED BY THE GEOTECHNICAL ENGINEER. STRUCTURAL FILL SHALL BE PLACED ON SOUND NATIVE MATERIAL. PROOF−ROLL CUT AREAS WHICH PROVIDE SUPPORT FOR PERMANENT STRUCTURES. AREAS WHICH ARE EXCESSIVELY YIELDING, AS DETERMINED BY THE CONTINUOUS OBSERVATION OF THE GEOTECHNICAL ENGINEER, SHALL BE OVEREXCAVATED AND REPLACED WITH STRUCTURAL FILL. STRUCTURAL FILL SHALL BE PLACED PER THE SPECIFICATION. USE LEAN CONCRETE FILL BELOW ALL PIPES EXISTING OUT OF BASEMENT WALL, FULL HEIGHT OF WALL. CONCRETE SHALL CONTAIN 2 SACKS OF CEMENT PER YARD.

LATERAL PRESSURE ON SUBGRADE WALLS:

THE DESIGN PRESSURES FOR SUBGRADE WALLS ARE BASED ON A "DRAINED" CONDITION. SEE CIVIL AND MECHANICAL DRAWINGS FOR SUBGRADE DRAINAGE SYSTEM. SEE GEOTECHNICAL REPORT FOR COMPACTION REQUIREMENTS AT SUBGRADE WALLS. SUBGRADE WALLS AND SUPPORTING SLABS SHALL HAVE ATTAINED THEIR FULL CONCRETE STRENGTH BEFORE PLACING ANY BACKFILL U.N.O. THE CONTRACTOR SHALL PROVIDE TEMPORARY BRACES FOR WALLS IF BACKFILL IS PLACED BEFORE WALLS AND SLABS ACHIEVE FULL CONCRETE STRENGTH.

NOTES ON CRACKING OF CONCRETE STRUCTURES:

CRACKING IS INHERENT TO THE MATERIAL PROPERTIES OF CONCRETE CONSTRUCTION (INCLUDING POST−TENSIONED CONCRETE STRUCTURES). WHILE EVERY EFFORT HAS BEEN MADE TO MINIMIZE THE EFFECTS OF UNSIGHTLY CRACKING, THE PRESENCE OF CRACKS ARE NORMAL AND UNAVOIDABLE. THE DESIGN OF THE CONCRETE STRUCTURAL ITEMS HAVE BEEN ANALYZED USING A "CRACKING SECTION." THE PRESENCE OF THE CRACKING SHOULD NOT BE CONSIDERED DETRIMENTAL TO THE STRUCTURE. CRACKS LARGER THAN 10 MILS SHALL BE FILLED AND SEALED WITH AN APPROVED CRACK FILLER TO PREVENT FUTURE DETERIORATION. ALLOWANCE SHALL BE MADE IN THE CONSTRUCTION BUDGET FOR SEALING OF SUCH CRACKS. IN SOME CASE, CRACKS DO NOT APPEAR UNTIL WELL AFTER CONSTRUCTION HAS BEEN COMPLETED. IT IS THE RESPONSIBILITY OF THE OWNER TO MAINTAIN THE STRUCTURE PROPERLY OVER THE LIFE OF THE STRUCTURE. CONCRETE CRACKS, SHOULD THEY OCCUR, SHALL BE FILLED AND SEALED TO PREVENT PREMATURE DETERIORATION OF THE STRUCTURE.

STRUCTURAL SHEET INDEX

SHEET	DESCRIPTION
S1.1	GENERAL STRUCTURAL NOTES
S1.2	GENERAL STRUCTURAL NOTES
S1.3	TYPICAL DETAILS
S1.4	TYPICAL DETAILS
S1.5	TYPICAL DETAILS
S1.6	TYPICAL DETAILS
S1.7	TYPICAL DETAILS
S2.00	FOUNDATION PLAN
S2.01	FRAMING PLAN
S2.10	FRAMING PLAN
S3.1	FOUNDATION DETAILS
S3.2	FOUNDATION DETAILS
S3.3	FRAMING DETAILS
S4.1	FRAMING DETAILS
S4.2	FRAMING DETAILS

NO	BY	DATE	REVISIONS	DATE	APP.

Registered Professional Engineer
CERTIFICATE NO.
70374
JAMES APPLEYARD
10/31/25
Date Signed
ARIZONA, U.S.A.

PREPARED BY: PKA
DESIGNED BY: JA
DRAWN BY: NS
CHECKED BY: JA
SCALE: AS NOTED
DATE: SEP 2025
JOB NO.: 23364

THESE DRAWINGS ARE THE PROPERTY OF P.A.C.E. AND SHALL NOT BE REPRODUCED IN ANY MANNER NOR BE USED FOR CONSTRUCTION UNLESS STAMPED "ISSUED FOR CONSTRUCTION".

TITLE: GENERAL STRUCTURAL NOTES

JOB: TOWN OF JEROME WASTEWATER TREATMENT PLANT — YAVAPAI AZ

ISSUED FOR BID

PREPARED BY: TAYLOR B. PIERCE — R.C.E 70097 — DATE

PACE
Advanced Water Engineering
8723 E. Via de Commercio, Suite 1 | Scottsdale, CA 85258
P: (480) 991-3995 | www.paceadvisor.com

SHEET S1.1
52 OF 99 SHEETS

JOB NO. 23364

GENERAL STRUCTURAL NOTES

APPLY UNLESS NOTED OTHERWISE

PK ASSOCIATES, LLC
6900 E. Belleview Ave. #200
Greenwood Village, Colorado 80111
Phone: (720) 799-1058
Email: cadd@pkastructural.com
Website: www.pkastructural.com

SHOP DRAWINGS:

SHOP DRAWINGS SHALL BE SUBMITTED FOR ALL STRUCTURAL ITEMS IN ADDITION TO ITEMS REQUIRED BY ARCHITECTURAL SPECIFICATIONS.

THE CONTRACTOR SHALL REVIEW ALL SHOP DRAWINGS PRIOR TO SUBMITTAL. ITEMS NOT IN ACCORDANCE WITH CONTRACT DOCUMENTS SHALL BE FLAGGED UPON HIS REVIEW.

VERIFY ALL DIMENSIONS WITH ARCHITECTURAL DRAWINGS AND ALL FINISHED GRADE WITH CIVIL DRAWINGS.

ANY CHANGES, SUBSTITUTIONS, OR DEVIATIONS FROM CONTRACT DOCUMENTS SHALL BE CLOUDED BY MANUFACTURER OR FABRICATOR. ANY OF THE AFOREMENTIONED WHICH ARE NOT CLOUDED OR FLAGGED BY SUBMITTING PARTIES, SHALL NOT BE CONSIDERED APPROVED AFTER ENGINEER'S REVIEW, UNLESS NOTED ACCORDINGLY.

THE ENGINEER HAS THE RIGHT TO APPROVE OR DISAPPROVE ANY CHANGES TO CONTRACT DOCUMENTS AT ANYTIME BEFORE OR AFTER SHOP DRAWING REVIEW.

THE SHOP DRAWINGS DO NOT REPLACE THE CONTRACT DOCUMENTS. ITEMS OMITTED OR SHOWN INCORRECTLY AND ARE NOT FLAGGED BY THE STRUCTURAL ENGINEER OR ARCHITECT ARE NOT TO BE CONSIDERED CHANGES TO CONTRACT DOCUMENTS. IT IS THE CONTRACTOR'S RESPONSIBILITY TO MAKE SURE ITEMS ARE CONSTRUCTED PER THE CONTRACT DOCUMENTS.

THE ADEQUACY OF ENGINEERING DESIGNS AND LAYOUT PERFORMED BY OTHERS RESTS WITH THE DESIGNING OR SUBMITTING AUTHORITY.

REVIEWING IS INTENDED ONLY AS AN AID TO THE CONTRACTOR IN OBTAINING CORRECT SHOP DRAWINGS. RESPONSIBILITY FOR CORRECTNESS SHALL REST WITH THE CONTRACTOR.

GENERAL:

ENTIRE CONTRACT DOCUMENTS SHALL BE USED TO CONSTRUCT BUILDING. SOME CRITICAL ITEMS REQUIRED BY OTHER DISCIPLINES MAY NOT BE SHOWN ON STRUCTURAL DRAWING (I.E. WALL, FLOOR AND ROOF OPENINGS, ARCHITECTURAL, MECHANICAL AND PLUMBING LOADS, SUPPORT PLATES ETC.)

ITEMS SHOWN BY OTHER DISCIPLINES WITH REFERENCE TO STRUCTURAL DRAWING BUT NOT SHOWN ON THESE STRUCTURAL DOCUMENTS SHALL BE CONSIDERED DESIGN BUILD ITEMS. CONTRACTOR SHALL SUBMIT DESIGN BY OTHERS FOR REVIEW.

THE STRUCTURAL CONSTRUCTION DOCUMENTS REPRESENT THE FINISHED STRUCTURE. THEY DO NOT INDICATE THE METHOD OF CONSTRUCTION. THE CONTRACTOR SHALL PROVIDE ALL MEASURES NECESSARY TO PROTECT THE STRUCTURE DURING CONSTRUCTION. SUCH MEASURES SHALL INCLUDE, BUT NOT BE LIMITED TO, BRACING, SHORING FOR LOADS DUE TO CONSTRUCTION EQUIPMENT, ETC. THE STRUCTURAL ENGINEER SHALL NOT BE RESPONSIBLE FOR THE CONTRACTOR'S MEANS, METHODS, TECHNIQUES, SEQUENCES FOR PROCEDURE OF CONSTRUCTION, OR THE SAFETY PRECAUTIONS AND THE PROGRAMS INCIDENT THERETO (NOR SHALL OBSERVATION VISITS TO THE SITE INCLUDE INSPECTION OF THESE ITEMS).

CONSTRUCTION MATERIALS SHALL BE SPREAD OUT IF PLACED ON FRAMED CONSTRUCTION. LOAD SHALL NOT EXCEED THE DESIGN LIVE LOAD PER SQUARE FOOT.

WHERE REFERENCE IS MADE TO VARIOUS TEST STANDARDS FOR MATERIALS, SUCH STANDARDS SHALL BE THE LATEST EDITION AND/OR ADDENDA.

ESTABLISH AND VERIFY ALL OPENINGS AND INSERTS FOR ARCHITECTURAL, MECHANICAL, PLUMBING AND ELECTRICAL WITH APPROPRIATE TRADES, DRAWINGS AND SUBCONTRACTORS PRIOR TO CONSTRUCTION.

OPTIONS ARE FOR CONTRACTOR'S CONVENIENCE. IF THE CONTRACTOR CHOOSES AN OPTION, THE CONTRACTOR SHALL BE RESPONSIBLE FOR ALL NECESSARY CHANGES AND SHALL COORDINATE ALL DETAILS.

NOTES AND DETAILS ON DRAWINGS SHALL TAKE PRECEDENCE OVER GENERAL STRUCTURAL NOTES AND TYPICAL DETAILS. WHERE NO DETAILS ARE SHOWN, CONSTRUCTION SHALL CONFORM TO SIMILAR WORK ON THE PROJECT.

ALL DIMENSIONS SHOWN (INCLUDING ELEVATIONS) ON STRUCTURAL DRAWINGS ARE TO ASSIST CONTRACTOR IN VERIFICATION. SCALING DIMENSIONS FROM DRAWINGS IS NOT PERMITTED. LOCATION OF ALL ITEMS SHALL BE DETERMINED BY DIMENSIONS OR NOTES ONLY; DO NOT USE GRAPHIC APPEARANCE TO ASSUME SPECIFIC LOCATIONS.

CONTRACTOR SHALL BE RESPONSIBLE FOR VERIFICATION OF ALL DIMENSIONS WITH ARCHITECTURAL AND FINISHED GRADE WITH CIVIL DRAWINGS PRIOR TO START OF CONSTRUCTION. RESOLVE ANY DISCREPANCY WITH THE ARCHITECT.

TYPICAL DETAILS MAY NOT NECESSARILY BE CUT ON PLANS, BUT APPLY UNLESS NOTED OTHERWISE.

WHERE DISCREPANCIES OCCUR BETWEEN PLANS, DETAILS, GENERAL STRUCTURAL NOTES AND SPECIFICATIONS, THE GREATER REQUIREMENTS SHALL GOVERN.

ANY ENGINEERING DESIGN, PROVIDED BY OTHERS AND SUBMITTED FOR REVIEW, SHALL BEAR THE SEAL OF AN ENGINEER REGISTERED IN THE STATE OF JURISDICTION.

SUPPLIER OF ENGINEERED STRUCTURAL COMPONENTS (I.E. STEEL JOISTS, STAIRS, PRECAST ITEMS) SHALL BE RESPONSIBLE FOR COMPLETE DESIGN AND SHALL USE ENTIRE CONTRACT DOCUMENTS TO INCLUDE ALL LOADS AND DETAIL REQUIREMENTS FROM ALL DISCIPLINES. SUPPLIER SHALL PROVIDE ADDITIONAL MATERIAL REQUIRED TO MEET ALL THEIR REQUIREMENTS FOR INSTALLATION (I.E. WIDER BEARING PLATES, SHIMS, ERECTION BOLTS ETC.).

STRUCTURAL STEEL SUPPLIER SHALL FURNISH BOLTS FOR OSHA CONNECTIONS (SEE DRAWINGS FOR DETAILS).

WALL SHORING SHALL BE INSTALLED PRIOR TO BACKFILLING BEHIND ALL BUILDING RETAINING WALLS, UNLESS ALL RESTRAINING SLABS ARE INSTALLED. USE HANDTAPPING ONLY WHEN WITHIN 8'-0", OR WITHIN HALF THE WALL HEIGHT OF BACKFILLED WALL.

CONTINUOUS FOUNDATION DRAIN PIPES (FRENCH DRAINS) OR WEEP HOLES SHALL BE PROVIDED BEHIND ALL BASEMENT WALLS AND ALL EXTERIOR RETAINING WALLS THAT RETAIN MORE THAN 3'-0" OF SOIL. WEEP HOLES WHERE USED SHALL BE 2" IN DIAMETER AT 6'-0" O.C. MAXIMUM.

BUILDING TOLERANCES:

STANDARD TOLERANCES SHALL BE BASED ON THE REQUIREMENTS OF THE AISC CODE OF STANDARD PRACTICE AND ACI 117, STANDARD SPECIFICATIONS FOR TOLERANCES FOR CONCRETE CONSTRUCTION AND MATERIALS.

SEQUENCING CONSTRUCTION AND LATERAL STABILITY:

THE STRUCTURAL COMPONENTS BY THEMSELVES ARE A NON-SELF-SUPPORTING STRUCTURE. LATERAL FORCES DUE TO WIND, EARTHQUAKE, OR SOIL ARE CARRIED BY THE ROOF AND FLOOR DIAPHRAGMS TO THE LATERAL SYSTEM. CERTAIN ELEMENTS SHOWN ON OR LOCAL STABILITY OF OTHER ELEMENTS (SUCH AS BEAMS, COLUMNS, AND WALLS). IF, DUE TO SEQUENCING OF CONSTRUCTION, THESE STABILITY ELEMENTS ARE NOT IN PLACE, THE CONTRACTOR SHALL RETAIN A LICENSED STRUCTURAL ENGINEER WHO SHALL INVESTIGATE WHERE TEMPORARY SHORING/BRACING IS REQUIRED, AND SHALL DESIGN THIS TEMPORARY SHORING/BRACING. THE CONTRACTOR SHALL PROVIDE THIS SHORING/BRACING UNTIL THE REQUIRED STRUCTURAL ELEMENTS AND THEIR CONNECTIONS HAVE BEEN INSTALLED AND REACH THEIR FINAL DESIGN STRENGTHS.

MISCELLANEOUS:

REFER TO ARCHITECTURAL, MECHANICAL, ELECTRICAL, CIVIL, ELEVATOR, OR OTHER SPECIALTY ENGINEERING DRAWINGS FOR DIMENSIONS NOT SHOWN, INCLUDING BUT NOT LIMITED TO: SIZE AND LOCATION OF CURBS, EQUIPMENT HOUSEKEEPING PADS, WALL AND FLOOR OPENINGS, BLOCKOUTS, FLOOR DEPRESSIONS, SUMPS, DRAINS, ANCHOR BOLTS, EMBEDDED ITEMS, ARCHITECTURAL TREATMENT, ETC. CONTRACTOR SHALL VERIFY DIMENSIONS AND RESOLVE DISCREPANCIES OR CONFLICTS PRIOR TO CONSTRUCTION. WHERE SECTIONS ARE INDICATED ON THE PLAN BY A NUMBER AND A DRAWING NUMBER THUS, 1/S5.01, THE INDICATED SECTION (1) IS SHOWN ON STRUCTURAL DRAWING S5.01.

ALL WINDOW SYSTEMS SHALL BE DESIGNED TO ACCOMMODATE VERTICAL DEFLECTION OF THE STRUCTURE OF 1/2" MINIMUM LIVE LOAD DEFLECTION, UNLESS GREATER VALUE IS NOTED ON PLANS OR DETAILS.

FLOOR FLATNESS/LEVELNESS SHALL MEET ARCHITECTURAL SPECIFICATIONS (1/4" IN 10 FOOT MINIMUM LEVELNESS UNLESS TIGHTER REQUIREMENT IN SPECIFICATIONS) IN HEIGHT FOR ALL STRUCTURAL SYSTEMS. CONTRACTOR SHALL INCLUDE COST FOR LEVELING ALL FLOORS. FOR ESTIMATING PURPOSES ONLY, ASSUME 1/2" THICK LEVELING AGENT OVER 15% OF FLOOR AREA.

FABRICATOR APPROVAL:

SPECIAL INSPECTIONS NOTED ABOVE APPLY TO SHOP FABRICATED ASSEMBLIES IN ADDITION TO ON-SITE WORK UNLESS THE FABRICATOR IS AN "APPROVED FABRICATOR" AS DEFINED IN 2022 CBC.

STRUCTURAL OBSERVATION:

ENGINEER OF RECORD SHALL PROVIDE VISUAL OBSERVATION OF THE STRUCTURAL SYSTEM, FOR GENERAL CONFORMANCE TO THE APPROVED PLANS AND SPECIFICATIONS, AT SIGNIFICANT CONSTRUCTION STAGES AND AT THE COMPLETION OF THE STRUCTURAL SYSTEM. CONTRACTOR IS REQUIRED FOR COORDINATING THE TIMING OF SITE VISITS AND SHALL INCLUDE A MINIMUM OF 3 VISITS. THESE VISITS ARE TO BE PAID BY THE CONTRACTOR. STRUCTURAL OBSERVATION DOES NOT INCLUDE OR WAIVE THE RESPONSIBILITY FOR THE INSPECTIONS REQUIRED BY THE BUILDING CODE (NOTED ABOVE).

INSTRUCTIONS TO BIDDERS CONTINGENCIES:

1. UNDER NO CIRCUMSTANCES SHALL THESE DRAWINGS BE "FINAL BID" UNTIL THE PROJECT IS FULLY PERMITTED.
2. ALL PRELIMINARY PRICING EFFORTS SHALL BE CONSIDERED TO BE ESTIMATES ONLY AND SHALL INCLUDE THE NECESSARY CONTINGENCIES, ALLOWANCES, ALTERNATES, ETC. AS APPROPRIATE TO ACCOUNT FOR MODIFICATIONS AND ADDITIONS THAT WILL OCCUR TO THE DRAWINGS DURING THE FINALIZATION OF THE DESIGN AND PERMITTING.
3. THE OWNER OR CONTRACTOR SHALL UTILIZE THE FOLLOWING MINIMUM CONTINGENCIES FOR EACH OF THE STRUCTURAL ELEMENT COSTS TO BE USED AT THE SOLE DISCRETION OF THE STRUCTURAL ENGINEER:

CONSTRUCTION DOCUMENTS/FINAL BID 3% MINIMUM

ALL OF THE "FINAL BID" CONTINGENCIES NOT USED BY THE STRUCTURAL ENGINEER SHALL BE REFUNDED TO THE OWNER PRIOR TO THE CLOSEOUT OF THE PROJECT.

4. ANY MODIFICATIONS, DELETIONS OR ELIMINATIONS TO THE STRUCTURAL BIDDING AND CONTINGENCY REQUIREMENTS, WITHOUT THE CONSENT OF THE STRUCTURAL ENGINEER, SHALL AUTOMATICALLY INDEMNIFY THE STRUCTURAL ENGINEER OF ANY COSTS THAT MAY ARISE DURING THE DESIGN AND CONSTRUCTION OF THE PROJECT.
5. WHERE DISCREPANCIES OCCUR WITHIN THE DRAWINGS THE CONTRACTOR WILL EITHER RESOLVE THE DISCREPANCIES WITH THE ARCHITECT BEFORE BIDDING OR INCLUDE THE GREATER COST ITEM IN THE BID AND RESOLVE THE DISCREPANCY PRIOR TO CONSTRUCTION.

NOTE TO CONTRACTOR REGARDING PRICING/BIDDING OF CITY SUBMITTAL DRAWINGS:

THESE DRAWINGS HAVE BEEN PREPARED FOR CITY SUBMITTAL, AND ARE NOT TO BE CONSIDERED 100% CONSTRUCTION DOCUMENTS UNTIL CITY PLAN REVIEW HAS BEEN COMPLETED AND FINAL BUILDING PERMIT HAS BEEN ISSUED. IF THESE DOCUMENTS ARE TO BE USED FOR PRICING, BID, OR STEEL MILL ORDER, THE CONTRACTOR SHALL PROVIDE IN THE PROJECT BUDGET AN ALLOWANCE FOR POTENTIAL CHANGES BETWEEN THE CITY SUBMITTAL DRAWINGS AND THE FINAL APPROVED SUBMITTAL AND CONSTRUCTION DOCUMENTS. ADDITIONALLY, MISCELLANEOUS ITEMS MAY NOT BE SHOWN ON THESE DRAWINGS. THESE ITEMS INCLUDE, BUT ARE NOT LIMITED TO, ELEVATOR AND EQUIPMENT SUPPORTS, BLOCKOUTS, ETC. REFER TO ARCHITECTURAL, MECHANICAL, ELECTRICAL, AND OTHER SPECIALTY DRAWINGS FOR ADDITIONAL INFORMATION. THE CONSTRUCTION BUDGET SHALL INCLUDE THESE ITEMS. THE STRUCTURAL ENGINEER WILL NOT BE RESPONSIBLE FOR CHANGE ORDER COSTS INCURRED (INCLUDING DISCARDED MATERIAL COSTS) DUE TO BIDDING OR STEEL MILL ORDER FROM THESE DRAWINGS. CONTACT STRUCTURAL ENGINEER FOR CLARIFICATION IF THE SCOPE AND QUANTITY OF ALLOWANCE TO BE CARRIED IS NOT CLEAR.

CONTRACTOR RESPONSIBILITY:

EACH CONTRACTOR OR SUB-CONTRACTOR RESPONSIBLE FOR THE CONSTRUCTION OF THE WIND AND/OR SEISMIC RESISTING SYSTEM THAT IS LISTED IN THE STATEMENT OF SPECIAL INSPECTIONS SHALL SUBMIT A WRITTEN STATEMENT OF RESPONSIBILITY TO THE BUILDING OFFICIAL AND THE OWNER PRIOR TO THE COMMENCEMENT OF WORK REQUIRING SPECIAL INSPECTION. THE CONTRACTOR'S STATEMENT OF RESPONSIBILITY SHALL CONTAIN ACKNOWLEDGMENT OF AWARENESS OF THE SPECIAL REQUIREMENTS CONTAINED IN THE STATEMENT OF SPECIAL INSPECTIONS.

DEFERRED SUBMITTALS: (PER 2012 IBC 107.3.4.1)

FOR THE PURPOSES OF THIS SECTION, DEFERRED SUBMITTALS ARE DEFINED AS THOSE PORTIONS OF THE DESIGN WHICH ARE NOT SUBMITTED AT THE TIME OF THE APPLICATION AND THAT ARE TO BE SUBMITTED TO THE BUILDING OFFICIAL WITHIN A SPECIFIED PERIOD.

DOCUMENTS FOR DEFERRED SUBMITTAL ITEMS SHALL BE SUBMITTED TO THE PROFESSIONAL IN RESPONSIBLE CHARGE FOR REVIEW. THE CONTRACTOR SHALL FORWARD THE REVIEWED DOCUMENTS TO BUILDING OFFICAL WITH A NOTATION INDICATING THAT THE DEFERRED SUBMITTAL DOCUMENTS HAVE BEEN REVIEWED AND BEEN FOUND TO BE IN GENERAL CONFORMANCE TO THE DESIGN OF THE BUILDING. THE DEFERRED SUBMITTAL ITEMS SHALL NOT BE INSTALLED UNTIL THE DESIGN AND SUBMITTAL DOCUMENTS HAVE BEEN APPROVED BY THE BUILDING OFFICIAL.

DEFERRED SUBMITTAL ITEMS:

ALUMINUM WALKWAY
GRATING
HANDRAILS/STAIRS
SHORING EXCAVATIONS
EQUIPMENT ATTACHMENTS, INCLUDING ADD'L FRAMING REQ'D

SPECIAL INSPECTION:

PER IBC CHAPTER 17, SPECIAL INSPECTION IS REQUIRED FOR THE FOLLOWING ITEMS:

CONCRETE: VERIFICATION AND INSPECTION	CONTINUOUS	PERIODIC	REFERRENCED STANDARD (NOTE 1)	IBC REFERENCE
1. Inspection of reinforcing steel, including prestressing tendons, and placement.	–	X	ACI 318: Ch. 20, 25.2 25.3, 26.6.1–26.6.3	1908.4
2. Reinforcing bar welding: a. Verify weldability of reinforcing bars other than ASTM A706; b. Inspect single-pass fillet welds, maximum 5/16"; and c. Inspect all other welds.	 – – X	 X X –	AWS D1.4 ACI 318: 26.6.4	---
3. Inspect anchors to be installed in concrete prior to and during placement of concrete where allowable loads have been increased or where strength design is used.	–	X	ACI 318: 17.8.2	---
4. Inspection of anchors post-installed in hardened concrete members. a. Adhesive anchors installed in horizontally or upwardly inclined orientations to resist sustained tension loads. b. Mechanical anchors and adhesive anchors not defined in 4.a.	 X –	 – X	 ACI 318: 17.8.2.4 ACI 318: 17.8.2	---
5. Verifying use of required design mix.	–	X	ACI318: Ch. 19, 26.4.3, 26.4.4	1904.1, 1904.2 1908.2, 1908.3
6. Prior to concrete placement, fabricate specimens for strength tests, per form slump and air content tests, and determine the temperature of the concrete.	X	–	ASTM C172 ASTM C31 ACI 318: 26.4, 26.12	1908.10
7. Inspection of concrete and shotcrete placement for proper application techniques.	X	–	ACI 318: 26.5	1908.6, 1908.7, 1908.8
8. Verify maintenance of specified curing temperature and techniques.	–	X	ACI 318: 26.5.3–26.5.5	1908.9
9. Inspect prestressed concrete for: a. Application of prestressing forces; and b. Grouting of bonded prestressing tendons	 X X	 – –	ACI 318: 26.10	--- ---
10. Inspect erection of precast concrete members.	–	X	ACI 318: Ch. 26.8	---
11. Verification of in-situ concrete strength, prior to stressing of tendons in post-tensioned concrete and prior to removal of shores and forms from beams and structural slab.	–	X	ACI 318: 26.11.2	---
12. Inspect formwork for shape, location and dimensions of the concrete member being formed.	–	X	ACI 318: 26.11.1.2(b)	---

NOTES:
1. WHERE APPLICABLE, SEE ALSO SECTION 1707.1, SPECIAL INSPECTION FOR SEISMIC RESISTANCE.
2. TABLES TAKEN DIRECTLY FROM IBC FOR REFERENCE.

MASONRY INSPECTION TASK	FREQUENCY (a)	REFERENCE FOR CRITERIA		IBC REFERENCE
	LEVEL 3	TMS 402	TMS 602	
1. As masonry construction begins, verify that the following are in compliance: a. Proportions of site-prepared mortar. b. Grade, type and size of reinforcement connectors and anchor bolts. c. Sample panel construction.	 P P C		 ART. 2.1, 2.6A, & 2.6C ART. 3.4 ART. 1.6D	
2. Prior to grouting, verify that the following are in compliance: a. Grout space. b. Placement of reinforcement, connectors, & anchor bolts. c. Proportions of site-prepared grout.	 C C P	 SEC. 6.1, 6.3.1, 6.3.6, & 6.3.7	 ART. 3.2D & 3.2F ART. 3.2E & 3.4 ART. 2.6B & 2.4 G.1.b	
3. Verify compliance of the following during construction: a. Materials and procedures with the approved submittals. b. Placement of masonry units and mortar joint construction. c. Size and location of structural members. d. Type, size, and location of anchors, including other details of anchorage of masonry to structural members, frames, or other construction. e. Welding of reinforcement. f. Preparation, construction, and protection of masonry during cold weather (temperature below 40°F (4.4°C) or hot weather (temperature above 90°F (32.2°C). g. Placement of grout is in compliance.	 P P P C C P C	 SEC. 1.2.1(e), 6.2.1, & 6.3.1 SEC. 6.1.6.1.2	 ART. 1.5 ART. 3.3B ART. 3.3F ART. 1.8C & 1.8D ART. 3.5	1705.04, 2104 & 2105
4. Observe preparation of grout specimens, mortar specimens, and/or prisms.	C		ART. 1.4 B.2.a.3, 1.4 B.2.b.3, 1.4 B.2.c.3, 1.4 b.3, & 1.4 B.4	

NOTES:
(a) Frequency refers to the frequency of inspection, which may be continuous during the listed task or periodically during the listed task, as defined in the table.
NR=Not Required, P=Periodic, C=Continuous
(b) Required for the first 5000 sq. ft. (465 sq. m.) of AAC masonry.
(c) Required after the first 5000 sq. ft. (465 sq. m.) of AAC masonry.

STEEL: VERIFICATION AND INSPECTION	CONTINUOUS	PERIODIC	REFERENCED STANDARD (NOTE1)	IBC REFERENCE
1. Material verification of high-strength bolts, nuts and washers: a. Identification markings to conform to ASTM standards specified in the approved construction documents. b. Manufacturer's certificate of compliance required.	 – –	 X X	APPLICABLE ASTM MATERIAL SPECS AISC 360, SEC. A3.3	
2. Inspection of high-strength bolting: a. Bearing-type connections. AISC 360, Section M2.5 1704.3.3	–	X		
3. Material verification of structural steel: a. Identification markings to conform to ASTM standards specified in the approved construction documents. b. Manufacturers' certified mill test reports.	–	–	AISC 360, SEC. M2.5 ASTM A 6 OR ASTM A 568	
4. Material verification of weld filler materials: a. Identification markings to conform to AWS specification in the approved construction documents. b. Manufacturer's certificate of compliance required.	 – –	 – –	AISC 360, SEC. A3.5	
5. Inspection of welding: a. Structural steel: 1) Complete and partial penetration groove welds. 2) Multipass fillet welds. 3) Single-pass fillet welds > 5/16" 4) Single-pass fillet welds = 5/16" 5) Floor and roof deck welds. b. Reinforcing steel: 1) Verification of weld ability of reinforcing steel other than ASTM A 706. 2) Reinforcing steel-resisting flexural and Axial forces in intermediate and special Moment frames, and boundary elements of Special reinforced concrete shear walls and shear reinforcement. 3) Shear reinforcement. 4) Other reinforcing steel.	 – X X X – – – – X X –	 – – – – X X – X – – X	 AWS D1.1 AWS D1.1 AWS D1.1 AWS D1.1 AWS D1.3 AWS D1.4 ACI 318: 3.5.2	
6. Inspection of steel frame joint details for compliance with approved construction documents: a. Details such as bracing and stiffening. b. Member locations. c. Application of joint details at each connection.	– – – –	X – – –		

NOTES:
1. WHERE APPLICABLE SEE ALSO SECTION 1701.1, SPECIAL INSPECTION FOR SEISMIC RESISTANCE.
2. TABLES TAKEN DIRECTLY FROM IBC FOR REFERENCE.

STEEL: CONSTRUCTION OTHER THAN STRUCTURAL STEEL: VERIFICATION AND INSPECTION	CONTINUOUS	PERIODIC	REFERENCED STANDARD (NOTE1)	IBC REFERENCE
1. Material verification of cold-formed steel deck: a. Identification markings to conform to ASTM standards specified in the approved construction documents. b. Manufacturer's certified test reports.	 – –	X	APPLICABLE ASTM MATERIAL STANDARDS	
2. Inspection of welding: a. Cold formed steel deck: 1) Floor and roof deck welds. b. Reinforcing steel: 1) Verification of weldability of reinforcing steel other than ASTM A 706. 2) Reinforcing steel resisting flexural and axial forces in intermediate and special moment frames, and boundary elements of special structural walls of concrete and shear reinforcement. 3) Shear reinforcement. 4) Other reinforcing steel.	 – – X – X	 X X – X –	 AWS D1.3 ACI 318: 3.5.2 AWS D1.4	
SOILS: 1. Verify materials below shallow foundations are adequate to achieve the design bearing apacity. 2. Verify excavations are extended to proper depth and have reached proper material. 3. Perform classification and testing of compacted fill materials. 4. Verify use of proper materials, densities and lift thicknesses during placement and compaction of compacted fill. 5. Prior to placement of compacted fill, inspect subgrade and verify that site has been properly prepared. Not the responsibility of the structural engineer. Special inspection certificate to be completed by geotechnical engineer.	 – – – X –	 X X X – X		
EXPANSION, SCREW, AND EPOXY BOLTS: 1. During placement of all expansion, screw, & epoxy bolts, for visual verification of hole diameter and depth and placement of bolt and/or epoxy.	–	X		

DUTIES AND RESPONSIBILITIES OF THE SPECIAL INSPECTOR:

A) THE SPECIAL INSPECTOR SHALL OBSERVE THE WORK ASSIGNED TO BE CERTAIN IT CONFORMS WITH THE APPROVED DESIGN DRAWINGS AND SPECIFICATION.

B) THE SPECIAL INSPECTOR SHALL FURNISH INSPECTION REPORTS TO THE BUILDING OFFICIAL, AND TO THE ENGINEER.

C) UPON COMPLETION OF THE ASSIGNED WORK THE ENGINEER OR ARCHITECT SHALL COMPLETE AND SIGN THE APPROPRIATE FORMS CERTIFYING THAT TO THE BEST OF HIS KNOWLEDGE THE WORK IS IN CONFORMANCE WITH THE APPROVED PLANS AND SPECIFICATIONS AND THE APPLICABLE WORKMANSHIP PROVISIONS OF THE CODE.

ISSUED FOR BID

NO	BY	DATE	REVISIONS	DATE	APP.

Registered Professional Engineer (Civil) — CERTIFICATE NO. 70374 JAMES APPLEYARD — Date Signed 10/31/25 — ARIZONA, U.S.A.

PREPARED BY: PKA
DESIGNED BY: JA
DRAWN BY: NS
CHECKED BY: JA
SCALE: AS NOTED
DATE: SEP 2025
JOB NO. 23364

TITLE: GENERAL STRUCTURAL NOTES

JOB: TOWN OF JEROME WASTEWATER TREATMENT PLANT
YAVAPAI AZ

PREPARED BY: PACE Advanced Water Engineering
8723 E. VIA de COMMERICO, SUITE A-204 | SCOTTSDALE, CA 85258
P: (408) 991-3595 | www.pacewater.com
TAYLOR B. PIERCE R.C.E 70097 DATE

SHEET S1.2
53 OF 99 SHEETS
JOB NO. 23364

THESE DRAWINGS ARE THE PROPERTY OF P.A.C.E. AND SHALL NOT BE REPRODUCED IN ANY MANNER NOR BE USED FOR CONSTRUCTION UNLESS STAMPED "ISSUED FOR CONSTRUCTION".

PK ASSOCIATES, LLC
6900 E. Belleview Ave. #200
Greenwood Village, Colorado 80111
Phone: (720) 799-1058
Email: cadd@pkastructural.com
Website: www.pkastructural.com

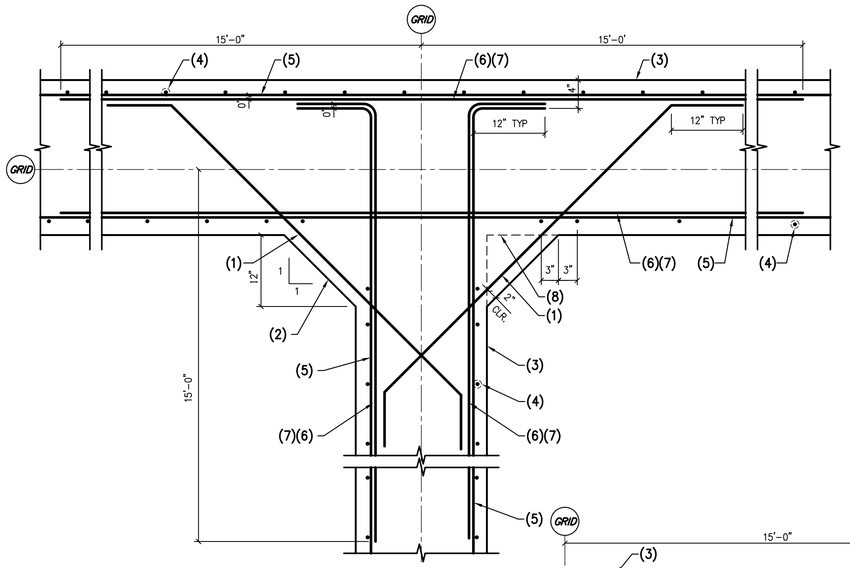

NOTES:
1. #4 AT 6" O.C. (NOT REQ'D AT 06A).
2. CHAMFER AT CORNER.
3. CONCRETE WALL.
4. VERTICAL WALL REINFORCING PER SHEET S3.1.
5. #6 AT 9" O.C. EACH FACE TYPICAL HORIZONTAL WALL REINFORCING. OPTION PROVIDE.
6. PROVIDE ADDITIONAL #6 AT 9" O.C. EACH FACE HORIZONTAL REINFORCING AT CORNERS (NET 4.5" O.C.).
7. PROVIDE ADDITIONAL HORIZONTAL REINFORCING FROM TOP OF WALL DOWN TO 5'-0" ABOVE MAT SLAB.
8. NO CHAMFER AT 06A.

BOLT DIAMETER	VERT BOLT EMBEDMENT LENGTH	HORIZ BOLT EMBEDMENT LENGTH	HEADED STUD FILLET WELD SIZE, "S".
1/2"	6"	4"	1/4"
5/8"	6"	4"	5/16"
3/4"	7"	5"	5/16"
7/8"	8"	6"	5/16"
1"	9"	7"	3/8"
1 1/8"	10"	8"	-----
1 1/4"	11"	9"	-----

NOTES:
PROVIDE ANCHORS, ANCHOR BOLTS AND EXPANSION BOLTS PER THIS SCHEDULE UNLESS NOTED ON PLANS OR DETAILS.

EXPANSION OR ADHESIVE BOLTS USED IN MASONRY SHALL HAVE I.C.B.O. APPROVAL IN MASONRY.

AT "ANCHORS" USE 3/16" FILLET WELD("S").

THICKNESS OF DRYPACK DOES NOT APPLY TOWARDS EMBEDMENT.

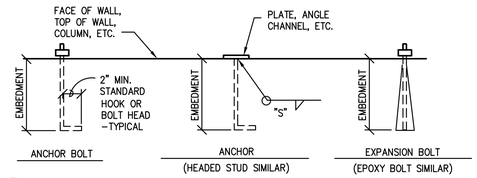

03 TYPICAL ANCHOR, ANCHOR BOLT, AND EXPANSION BOLT SCHEDULE
NO SCALE

STANDARD ASTM A615 (60 KSI) REBAR								
	CLASS B TENSION SPLICE LENGTHS						COMP. BARS	
CONC. PSI	f'c = 2,500 PSI/ f'c = 3,000 PSI		f'c = 4,000 PSI		f'c = 5,000 PSI AND HIGHER		f'c = ALL	
BAR LOCATION	REGULAR CLASS	TOP CLASS	REGULAR CLASS	TOP CLASS	REGULAR CLASS	TOP CLASS	STD LAP	ENCLOSED W/ SPIRAL TIES
SIZE								
#3	24"	31"	19"	24"	17"	22"	12"	12"
#4	32"	41"	25"	33"	23"	29"	15"	12"
#5	39"	51"	31"	41"	28"	36"	19"	14"
#6	47"	61"	37"	49"	34"	43"	23"	17"
#7	69"	89"	54"	71"	49"	63"	26"	20"
#8	78"	102"	62"	81"	56"	72"	30"	23"
#9	88"	115"	70"	91"	63"	81"	34"	25"
#10	100"	129"	79"	102"	70"	92"	38"	29"
#11	110"	143"	87"	113"	78"	102"	42"	32"

NOTES:
1. TOP BARS ARE ANY HORIZONTAL BARS PLACED SO THAT MORE THAN 12" OF FRESH CONCRETE IS CAST IN THE MEMBER BELOW THE REINFORCEMENT.
2. UNLESS NOTED OTHERWISE, LAP SPLICES IN CONCRETE BEAMS, SLABS AND WALLS SHALL BE CLASS "B" TENSION SPLICES. CONCRETE COLUMNS SHALL USE COMPRESSION LAP SPLICES.
3. CONTACT STRUCTURAL ENGINEER IF CENTER TO CENTER SPACING OF REINFORCING IS LESS THAN OR EQUAL TO 3 BAR DIAMETERS, <3db OR 2db CLEAR SPACING BETWEEN BARS.

01 LAP SCHEDULE FOR REINFORCING STEEL
NO SCALE

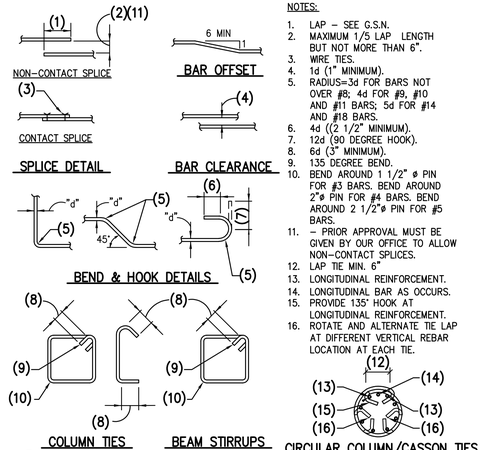

NOTES:
1. LAP – SEE G.S.N.
2. MAXIMUM 1/5 LAP LENGTH BUT NOT MORE THAN 6".
3. WIRE TIES.
4. 1d (1" MINIMUM).
5. RADIUS=3d FOR BARS NOT OVER #8; 4d FOR #9, #10 AND #11 BARS; 5d FOR #14 AND #18 BARS.
6. 4d ((2 1/2" MINIMUM).
7. 12d (90 DEGREE HOOK).
8. 6d (3" MINIMUM).
9. 135 DEGREE BEND.
10. BEND AROUND 1 1/2" ø PIN FOR #3 BARS. BEND AROUND 2"ø PIN FOR #4 BARS. BEND AROUND 2 1/2"ø PIN FOR #5 BARS.
11. – PRIOR APPROVAL MUST BE GIVEN BY OUR OFFICE TO ALLOW NON-CONTACT SPLICES.
12. LAP TIE MIN. 6"
13. LONGITUDINAL REINFORCEMENT.
14. LONGITUDINAL BAR AS OCCURS.
15. PROVIDE 135° HOOK AT LONGITUDINAL REINFORCEMENT.
16. ROTATE AND ALTERNATE TIE LAP AT DIFFERENT VERTICAL REBAR LOCATION AT EACH TIE.

04 TYPICAL CONCRETE REINFORCING BAR DETAILS
NO SCALE

STANDARD ASTM A615 (60 KSI) REBAR							
BAR SIZE	EMBEDMENT		EXTENSION		MINIMUM OUTSIDE DIAMETER OF BEND (INCHES)	CLASS A STRAIGHT BAR DEVELOPMENT	
	3000 PSI CONCRETE	5000 PSI CONCRETE & HIGHER	90° HOOK	180° HOOK		5000 PSI & HIGHER	3000 PSI
#3	6.00	6.00	4.5	2.5	3.00	13	17
#4	7.75	6.00	6.0	2.5	4.00	17	22
#5	9.75	7.50	7.5	2.5	5.00	22	28
#6	11.50	9.00	9.0	3.0	6.00	26	33
#7	13.50	10.50	10.5	3.5	7.00	38	48
#8	15.50	12.00	12.0	4.0	8.00	43	55
#9	17.50	13.50	13.75	4.75	11.28	48	62
#10	19.50	15.25	15.25	5.25	12.70	54	70
#11	21.75	16.75	17.00	5.75	14.10	60	78

NOTES:
1. EMBEDMENT LENGTH IS BASED ON 2 1/2" MINIMUM SIDE COVER AND 2" MINIMUM END COVER.
2. CONTACT STRUCTURAL ENGINEER IF CENTER TO CENTER SPACING OF REINFORCING IS LESS THAN OR EQUAL TO 3 BAR DIAMETERS <3db OR 2db CLEAR SPACING BETWEEN BARS.
3. WHERE CLEAR COVER <db, MULTIPLY EMBEDMENT AND STRAIGHT BAR DEVELOPMENT BY 1.5.

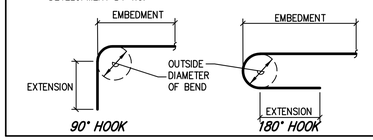

02 HOOKED DOWEL DEVELOPMENT LENGTH IN TENSION (INCHES)
NO SCALE

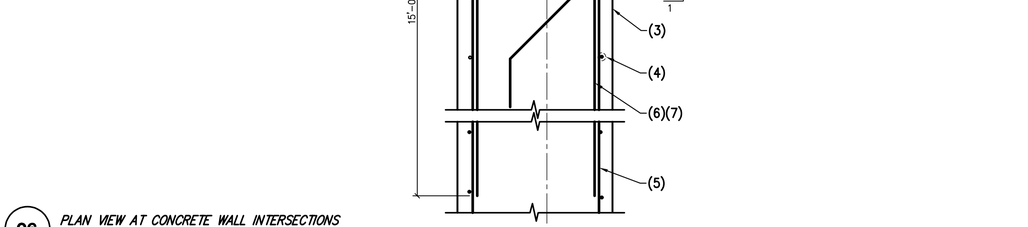

06 PLAN VIEW AT CONCRETE WALL INTERSECTIONS
06A AS NOTED
NO SCALE

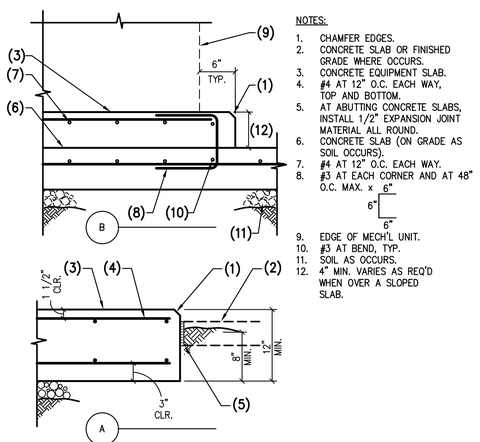

NOTES:
1. CHAMFER EDGES.
2. CONCRETE SLAB OR FINISHED GRADE WHERE OCCURS.
3. CONCRETE EQUIPMENT SLAB.
4. #4 AT 12" O.C. EACH WAY, TOP AND BOTTOM.
5. AT ABUTTING CONCRETE SLABS, INSTALL 1/2" EXPANSION JOINT MATERIAL ALL ROUND.
6. CONCRETE SLAB (ON GRADE AS SOIL OCCURS).
7. #4 AT 12" O.C. EACH WAY.
8. #3 AT EACH CORNER AND AT 48" O.C. MAX. x 6" 6" 6"
9. EDGE OF MECH'L UNIT.
10. #3 AT BEND, TYP.
11. SOIL AS OCCURS.
12. 4" MIN. VARIES AS REQ'D WHEN OVER A SLOPED SLAB.

08 CONCRETE EQUIPMENT PAD
NO SCALE

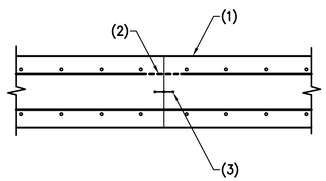

NOTES:
1. CONCRETE WALL.
2. CUT EVERY OTHER BAR ON EACH FACE OF WALL. STAGGER CUT BARS.
3. CONT. WATERSTOP, GREENSTREAK PVC RIBBED WITH CENTER BULB, MODEL #735 PER MECH'L, (OR APPROVED EQUAL.)

NOTE:
LOCATION OF VERTICAL WALL C.J. TO BE AT A MAXIMUM OF TWICE THE WALL HEIGHT.

07 PLAN – WALL C.J.
NO SCALE

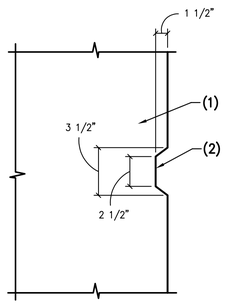

NOTES:
1. CONCRETE.
2. KEYED JOINT – REMOVE FORM MATERIAL PRIOR TO PLACING ADJACENT CONCRETE.

NOTE:
ALL DIMENSIONS ARE ± 1/2".

05 TYPICAL KEY IN CONCRETE
NO SCALE

NO	BY	DATE	REVISIONS	DATE	APP.

THESE DRAWINGS ARE THE PROPERTY OF P.A.C.E. AND SHALL NOT BE REPRODUCED IN ANY MANNER NOR BE USED FOR CONSTRUCTION UNLESS STAMPED "ISSUED FOR CONSTRUCTION".

Registered Professional Engineer (Civil) CERTIFICATE NO. 70374 JAMES APPLEYARD 10/31/25 Date Signed ARIZONA, U.S.A.

PREPARED BY: PKA
DESIGNED BY: JA
DRAWN BY: NS
CHECKED BY: JA
DATE: SEP 2025
JOB NO.: 23364
SCALE: AS NOTED

TITLE: TYPICAL DETAILS

JOB: TOWN OF JEROME WASTEWATER TREATMENT PLANT YAVAPAI AZ

ISSUED FOR BID

PREPARED BY:
PACE
Advanced Water Engineering
8723 E. VIA de VENTURA, SUITE 240, SCOTTSDALE, CA 85258
P: (480) 991-3995 | www.pacewater.com
TAYLOR B. PIERCE R.C.E 70097 DATE

SHEET S1.3
54 OF 99 SHEETS

JOB NO. 23364

PK ASSOCIATES, LLC
6900 E. Belleview Ave. #200
Greenwood Village, Colorado 80111
Phone: (720) 799-1058
Email: cadd@pkastructural.com
Website: www.pkastructural.com

NOMINAL BEAM DEPTH "D"	NUMBER OF 1" DIA. ASTM, F3125 BOLTS
UP TO 7"	2
8" – 11"	2
12" – 14"	3
15" – 17"	4
18" – 20"	5
21" – 23"	6
24" – 29"	7
30" – 32"	8
33" – 35"	9
36"	10

FRAMING NOTES:

1. THE TYPICAL STEEL BEAM TO STEEL COLUMN OR STEEL BEAM TO STEEL BEAM CONNECTION CONSISTS OF 3/8" SINGLE SHEAR PLATES WITH 1"ø. ASTM F3125 BOLTS. USE 5/8" SHEAR PLATES WHERE "D" = 27" OR GREATER.
2. ALL BOLTS SHALL BE INSTALLED USING SHORT SLOTTED HOLES IN EITHER THE BEAM WEB OR THE SHEAR PLATE PER LATEST AISC SPECIFICATIONS.

18 BOLT SCHEDULE FOR TYPICAL STEEL CONNECTIONS
NO SCALE

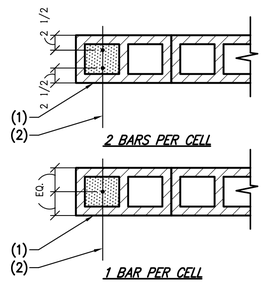

NOTES:

1. MASONRY WALL.
2. VERTICAL WALL REINFORCING.

NOTE:
SEE PLANS AND/OR TYPICAL DETAILS FOR NUMBER OF CELLS REINFORCED (GREATER REQUIREMENT GOVERNS).

15 TYPICAL REINFORCING PLACEMENT – EACH FACE
NO SCALE

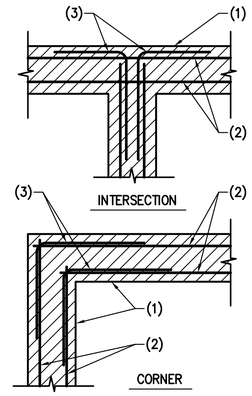

NOTES:

1. MASONRY WALL.
2. BOND BEAM REINFORCING.
3. CORNER BARS SAME SIZE AND SPACING AS HORIZONTAL REINFORCING – LAP PER G.S.N. (24" MINIMUM).

12 MASONRY BOND BEAM AT INTERSECTING WALLS
NO SCALE

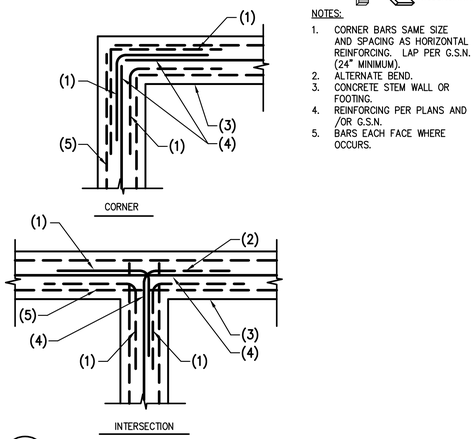

NOTES:

1. CORNER BARS SAME SIZE AND SPACING AS HORIZONTAL REINFORCING. LAP PER G.S.N. (24" MINIMUM).
2. ALTERNATE BEND.
3. CONCRETE STEM WALL OR FOOTING.
4. REINFORCING PER PLANS AND /OR G.S.N.
5. BARS EACH FACE WHERE OCCURS.

07 PLAN – CORNER REINFORCING IN CONCRETE GRADE BEAM WALL AND/OR FOOTING
NO SCALE

H	t	VERTICAL WALL REINFORCING		T	HEEL	TOE	FOOTING HEEL REINF.	SHEAR KEY		REMARKS
		WALL	DOWELS					Sd	Sw	
0'–0" TO 3'–0"	8"	#5 AT 18" O.C.	---	15"	0'–8"	0'–8"	---	---	---	SEE NOTE 1 & 2
3'–1" TO 5'–0"	8"	#5 AT 18" O.C.	---	12"	1'–1"	1'–1"	#5 AT 18" O.C.	12"	8"	SEE NOTE 1 & 2
5'–1" TO 7'–0"	8"	#5 AT 14" O.C.	---	12"	1'–7"	1'–6"	#5 AT 18" O.C.	24"	8"	SEE NOTE 1 & 2
7'–1" TO 9'–0"	8"	#5 AT 12" O.C.	#6 AT 12" O.C.	14"	2'–2"	2'–0"	#5 AT 12" O.C.	32"	8"	SEE NOTE 1 & 2
9'–1" TO 10'–0"	8"	#5 AT 12" O.C.	#7 AT 12" O.C.	20"	2'–8"	2'–6"	#5 AT 8" O.C.	32"	8"	SEE NOTE 1 & 2

NOTES:

1. USE #4 AT 12" O.C. HORIZONTALS.
2. LAP AND/OR EMBED ALL DOWELS 40 BAR DIAMETERS MINIMUM.

NOTE: REF DETAIL 20 FOR RETAINING WALLS ABOVE 10'–0" TALL

17 CONCRETE RETAINING WALL
NO SCALE

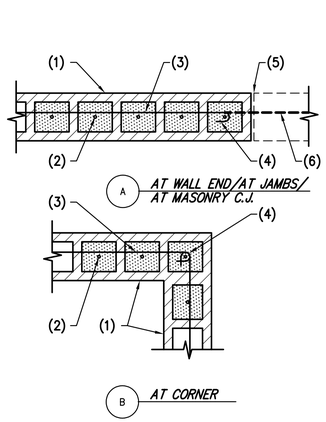

NOTES:

1. MASONRY WALL.
2. VERT. REINF. PER SCHEDULE.
3. HORIZ. REINF. PER SCHEDULE.
4. STANDARD HOOK PER TYP. DETAIL AT ENDS OF ALL WALLS.
5. MASONRY WALL AT C.J. AS OCCURS.
6. HORIZONTAL CONT. AT BOND BEAMS PER DETAIL 15.

16 PLAN VIEW – TYPICAL HORIZONTAL REINF. AT END OF WALL
NO SCALE

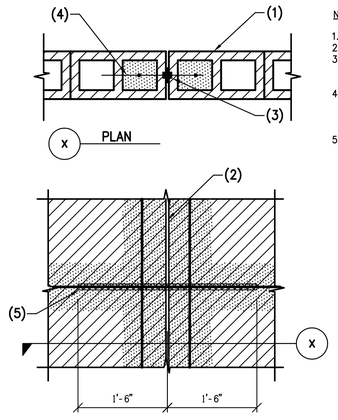

NOTES:

1. MASONRY WALL.
2. CONTROL JOINT.
3. CONTROL JOINT MATERIAL PER ARCHITECTURAL DRAWINGS AND SPECIFICATIONS.
4. 1 VERTICAL BAR EACH SIDE IN SOLID GROUTED CELLS TO MATCH VERTICAL WALL REINFORCING.
5. CONTINUOUS BOND BEAM BARS – WRAP BARS WITH MASTIC FOR BOND BREAK.

NOTE:
BOND BEAM BARS SHALL NOT BE LAPPED WITHIN 8'–0" OF CONTROL JOINT.

13 CONTROL JOINT IN MASONRY WALL
NO SCALE

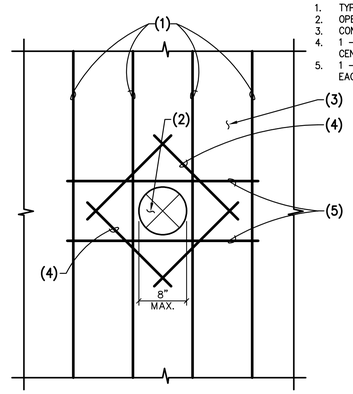

NOTES:

1. TYPICAL WALL REINF.
2. OPENING IN CONCRETE WALL.
3. CONCRETE WALL.
4. 1 – #5 DIAG. BARS IN THE CENTER OF WALL.
5. 1 – #5 TOP AND BOTTOM EACH FACE.

10 TYPICAL SMALL OPENING IN CONCRETE WALL
NO SCALE

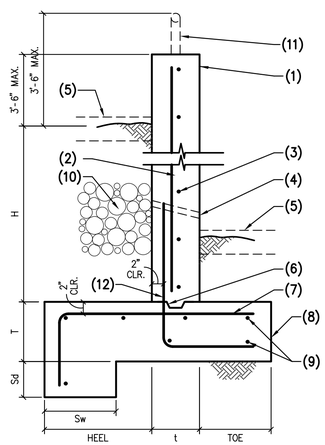

NOTES:

1. CONCRETE WALL.
2. VERTICAL WALL REINFORCING.
3. HORIZONTAL REINFORCING.
4. 1" DIA. WEEP HOLES AT 32" O.C.
5. FINISHED GRADE OR CONCRETE SLAB WHERE OCCURS.
6. CONTINUOUS KEY – SEE TYPICAL KEY IN CONCRETE DETAIL.
7. FOOTING HEEL REINFORCING.
8. CONCRETE FOOTING.
9. #4 AT 16" O.C.
10. 1 1/2" DIA. ROCK IN 12" X 12" X CONTINUOUS ROCK POCKET.
11. HANDRAIL ATTACHMENT BY OTHERS.
12. DOWELS TO MATCH AND LAP WALL REINFORCING U.N.O IN SCHEDULE.

17 CONCRETE RETAINING WALL
NO SCALE

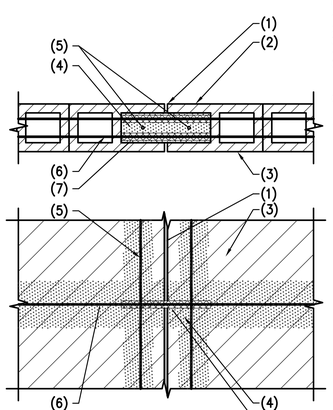

NOTES:

1. RAKE JOINT.
2. OPEN END MASONRY UNIT.
3. MASONRY WALL.
4. GROUT SOLID.
5. VERT. BAR EACH SIDE OF CONTROL JOINT TO MATCH VERT. WALL REINF.
6. HORIZ. REINF. CONT. THRU CONTROL JOINT.
7. WRAP HORIZ. BAR 8" EACH SIDE OF JOINT W/ MASTIC.

14 CONTROL JOINT IN MASONRY BEAM
NO SCALE

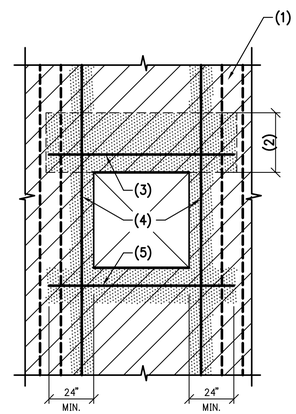

JAMB BARS	WALL OPENING
2	0'–0" → 4'–0"
3	4'–1" → 8'–0"
4	8'–1" → 10'–0"
5	10'–1" → 12'–0"
2 BARS IN FIRST 4 CELLS (8 BARS)	12'–1" → 16'–0"
2 BARS IN FIRST 6 CELLS (12 BARS)	16'–1" → 20'–0"
FOR OPENINGS LARGER THEN 20'–0" SEE PLAN. IF SPECIAL JAMB BARS ARE NOT SHOWN. USE WALL BRACES TO STRUCTURE.	

NOTES:

1. MASONRY WALL.
2. DEPTH OF MASONRY LINTEL BEAM – SEE PLANS AND DETAILS.
3. LINTEL REINFORCING.
4. VERTICAL BAR IN GROUTED CELL TO MATCH VERTICAL WALL REINFORCING – FULL HEIGHT OF WALL – SEE SCHEDULE BELOW, ONE BAR PER CELL.
5. 2 #5 BARS IN 8" DEEP SOLID GROUTED BOND BEAM – HOOK BARS UP AT CORNERS.

11 TYPICAL OPENING IN MASONRY WALL
NO SCALE

NO	BY	DATE	REVISIONS	DATE	APP.

Registered Professional Engineer (Civil)
CERTIFICATE NO.
70374
JAMES APPLEYARD
10/31/25
Date Signed
ARIZONA, U.S.A.

PREPARED BY: PKA
DESIGNED BY: JA
DRAWN BY: NS
CHECKED BY: JA
SCALE: AS NOTED
DATE: SEP 2025
JOB NO.: 23364

TITLE: TYPICAL DETAILS

JOB: TOWN OF JEROME
WASTEWATER
TREATMENT PLANT
YAVAPAI AZ

ISSUED FOR BID

PREPARED BY:
PACE
Advanced Water Engineering
8723 E. Via de Commercio, Suite A, Scottsdale, CA 85258
P: (408) 991-3595 | www.pacewater.com
TAYLOR B. PIERCE R.C.E 70097 DATE

SHEET
S1.4
55 OF 99 SHEETS

JOB NO. 23364

THESE DRAWINGS ARE THE PROPERTY OF P.A.C.E. AND SHALL NOT BE REPRODUCED IN ANY MANNER NOR BE USED FOR CONSTRUCTION UNLESS STAMPED "ISSUED FOR CONSTRUCTION".

PK ASSOCIATES, LLC
6900 E. Belleview Ave. #200
Greenwood Village, Colorado 80111
Phone: (720) 799-1058
Email: cadd@pkastructural.com
Website: www.pkastructural.com

NOTES:

1. 8" CONCRETE WALL.
2. #7 DOWELS AT 8" O.C.
3. #5 AT 12" VERTICALS.
4. #4 AT 12" HORIZONTALS.
5. 28" MIN.
6. L2x2x1/4 W/ 1/2"ø H.S. AT 18" O.C.
7. GRATING AND ATTACHMENT BY OTHERS.
8. L3x3x1/4 WITH 1/2" HILTI KWIK HUS EZ SCREW ANCHORS AT 24" O.C.
9. CONCRETE FOOTING W/ #5 AT 12" O.C. E.W. TOP & BOTTOM.
10. 1/2"x8"x5" STEEL PLATE WITH 2- 1/2"ø H.S. AT 5" O.C.
11. HANDRAIL AND ATTACHMENT BY OTHERS.
12. CONCRETE SLAB OR FINISHED GRADE AS OCCURS.
13. WATERSTOP PER PACE PER SPECIFICATION SECTION 03 1500.

19 CONCRETE RETAINING WALL AT CHLORINE CONTACT CHANNEL
NO SCALE

NOTES:

1. 8" CONCRETE WALL.
2. #5 AT 12" O.C.
3. #8 AT 12" O.C.
4. 1" DIA. WEEP HOLES AT 32" O.C.
5. FINISHED GRADE OR CONCRETE SLAB WHERE OCCURS.
6. CONTINUOUS KEY – SEE TYPICAL KEY IN CONCRETE DETAIL.
7. #5 AT 8" O.C.
8. CONCRETE FOOTING.
9. HANDRAIL ATTACHMENT BY OTHERS.
10. 1 1/2" DIA. ROCK IN 12" X 12" X CONTINUOUS ROCK POCKET.

20 12'-0" TALL RETAINING WALL
NO SCALE

NO	BY	DATE	REVISIONS	DATE	APP.

Registered Professional Engineer (Civil)
CERTIFICATE NO.
70374
JAMES APPLEYARD
10/31/25
Date Signed
ARIZONA, U.S.A.

PREPARED BY: PKA
DESIGNED BY: JA
DRAWN BY: NS
CHECKED BY: JA
SCALE: AS NOTED
DATE: SEP 2025
JOB NO.: 23364

TITLE: TYPICAL DETAILS

JOB: TOWN OF JEROME
WASTEWATER
TREATMENT PLANT
YAVAPAI AZ

ISSUED FOR BID

PREPARED BY:
PACE
Advanced Water Engineering
8723 E. VIA DE COMMERCIO, 1ST FLOOR, SCOTTSDALE, CA 85258
P: (480) 991-3595 | W: www.pacewater.com
TAYLOR B. PIERCE R.C.E. 70097 DATE

SHEET
S1.5
56 OF 99 SHEETS

JOB NO. 23364

THESE DRAWINGS ARE THE PROPERTY OF P.A.C.E. AND SHALL NOT BE REPRODUCED IN ANY MANNER NOR BE USED FOR CONSTRUCTION UNLESS STAMPED "ISSUED FOR CONSTRUCTION".

FOR GENERAL PRICING INFORMATION ONLY, COMPLETE DESIGN AND SHOP DRAWINGS TO BE SUPPLIED AND SUBMITTED BY STUD SUPPLIER

PK ASSOCIATES, LLC
6900 E. Belleview Ave. #200
Greenwood Village, Colorado 80111
Phone: (720) 799-1058
Email: cadd@pkastructural.com
Website: www.pkastructural.com

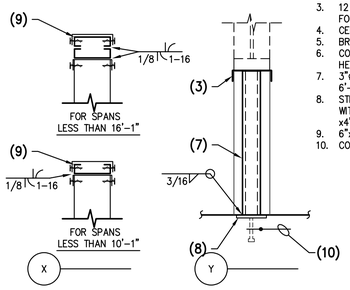

NOTES:
1. STEEL STUD.
2. STEEL HEADER PER SCHEDULE.
3. 12 GAGE STEEL STUD TRACK FOR SPANS LESS THAN 16'-1".
4. CEILING LINE.
5. BRACES PER DETAIL.
6. CONT. SPANDREL OPENING HEADER.
7. 3"ø. STEEL PIPE AT 6'-0" O.C.
8. STEEL PLATE 1/2"x5"x10" WITH 2- 1/2"ø HEADED STUDS x4" LONG AT 8" O.C.
9. 6"x16 GAGE (600 S200).
10. CONT. 1 #5 AT H.S.

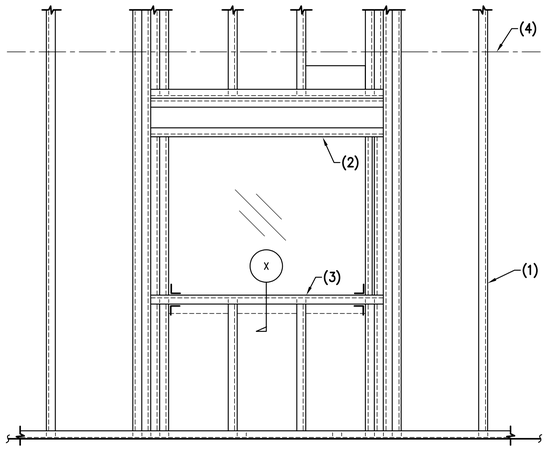

TYPICAL PUNCHED OPENING IN STUD WALL

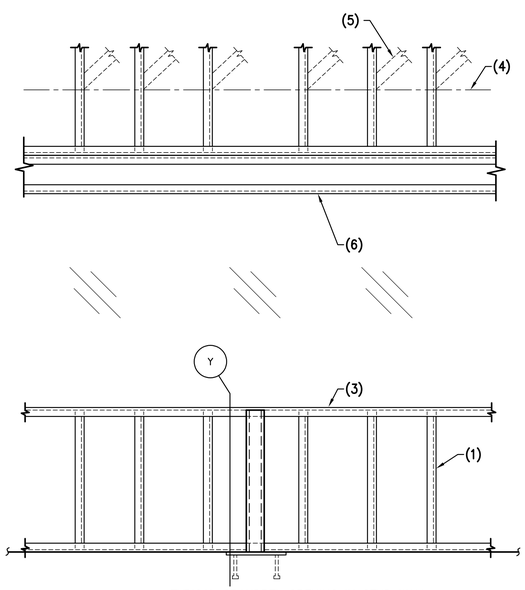

TYPICAL SPANDREL OPENING IN STUD WALL

CF7 TYPICAL OPENINGS IN STEEL STUD WALL

NO SCALE

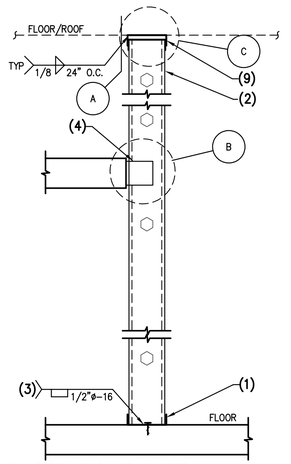

CF3 TYPICAL STEEL STUD ATTACHMENT

NO SCALE

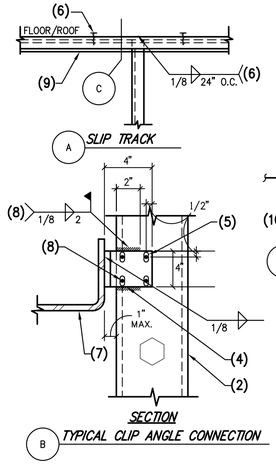

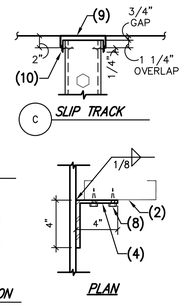

NOTES:
1. CONT. 16 GAGE "UNPUNCHED" STEEL TRACK. FOR ATTACHMENT SEE DETAIL 40.
2. STEEL STUD WALL.
3. USE 1/2"ø PUDDLE WELD AT 16" O.C. WHERE TRACK IS INSTALLED ON STEEL DECK (ROOF CONDITIONS).
4. STEEL CLIP ANGLE 4"x4"x12 GA. x 4" LONG AT EACH STUD.
5. PROVIDE 1" VERT. SLOTTED HOLE WHERE STUDS ARE FULL FLOOR HEIGHT.
6. HILTI SHOT PIN TO BOTTOM OF CONCRETE SLAB.
7. STEEL MEMBER (BENT PLATE AND BEAM FLANGE SHOWN OR CONTINUOUS EDGE ANGLE AT CONCRETE SLAB).
8. ALTERNATE TO WELD AT STUD TO CLIP ANGLE CONNECTION – 4 – #10 x 3/4" LONG SELF– TAPPING TEK SCREWS.
9. DEFLECTION TRACK TO ALLOW VERTICAL MOVEMENT – USE (2)– 16 GA. TRACKS BOTTOM TRACKS TO HAVE 2" LEGS. (ALLOW 3/4" DEFLECTION).
10. #10 x 3/4" LONG SELF–TAPPING SCREW EACH SIDE.

COLD FORMED STRUCTURAL STEEL FRAMING:

ALL COLD–FORMED STEEL FRAMING SHALL BE DESIGNED, FABRICATED AND ERECTED IN ACCORDANCE WITH MANUFACTURER'S RECOMMENDATIONS AND IN ACCORDANCE WITH THE LATEST EDITION OF "SPECIFICATIONS FOR THE DESIGN OF COLD–FORMED STEEL STRUCTURAL MEMBERS" BY THE AMERICAN IRON AND STEEL INSTITUTE.

STEEL FOR 14 AND 16 GAGE STUDS AND JOISTS, AND FOR ALL DIAGONAL TENSION STRAPS SHALL HAVE A MINIMUM YIELD STRENGTH OF 50 KSI. STEEL FOR ALL 18 AND 20 GAGE STUDS AND JOISTS, AND FOR ALL GAGES OF TRACK, ACCESSORIES AND BRIDGING SHALL HAVE A MINIMUM YIELD STRENGTH OF 33 KSI. STEEL SHALL BE GALVANIZED AT LOCATIONS EXPOSED TO WEATHER AND WHEREVER NOTED.

ALL STUD FRAMING (BOTH INTERIOR AND EXTERIOR) SHALL BE DESIGNED AND CONSTRUCTED TO ACCOMMODATE VERTICAL DEFLECTION OF THE STRUCTURE OF UP TO 1/2" LIVE LOAD DEFLECTION, UNLESS GREATER VALUE IS NOTED ON PLANS OR DETAILS. UTILIZE SLIP TRACK OR OTHER SIMILAR MEANS.

ALL STUDS SHALL BE SECURELY SEATED FOR FULL END BEARING ON TOP AND BOTTOM TRACK. UNLESS NOTED OTHERWISE, PROVIDE DOUBLE STUDS AT ALL JAMBS, CORNERS, INTERSECTIONS, BEAM BEARINGS AND JOIST BEARINGS. BRIDGING SHALL BE INSTALLED PER MANUFACTURER'S RECOMMENDATION WITH THE FOLLOWING MINIMUM REQUIREMENTS.

FOR WALLS WITH NO AXIAL LOAD, PROVIDE BRIDGING AT MID–HEIGHT FOR WALLS LESS THAN OR EQUAL TO 10'–0" HIGH, AND 5'–0" O.C. MAXIMUM FOR WALLS GREATER THAN 10'–0" HIGH. FOR AXIAL LOAD BEARING WALLS, PROVIDE BRIDGING EQUALLY SPACED AT 4'–0" MAXIMUM. IN ADDITION, BRIDGING SHALL BE PROVIDED AT ROOF LINES AND ELSEWHERE AS NOTED ON THE DRAWINGS. SOLID BLOCKING SHALL BE INSTALLED IN LIEU OF BRIDGING WHERE NOTED ON THE DRAWINGS.

STEEL STUD DETAILS AND GAGES DEPICATED ON STRUCTURAL DRAWINGS SHOW GENERAL STRUCTURAL REQUIREMENTS AND ARE FOR SCHEMATICS PURPOSE ONLY. THE CONTRACTOR SHALL BE REQUIRED TO SUBMIT SHOP DRAWINGS WITH DESIGN CALCULATIONS SEALED BY A REGISTERED ENGINEER FOR ALL STEEL STUD FRAMING AND ANY ADDITIONAL FRAMING MATERIALS REQUIRED FOR COMPLETE DESIGN SHALL BE INCORPORATED. CALCULATIONS SHALL INCLUDE DERIVATION OF WND LOADS PER SPECIFIED BUILDING CODE.

ALL WELDING SHALL BE PERFORMED BY WELDERS EXPERIENCED IN LIGHT GAGE STRUCTURAL STEEL FRAMING WORK. DO NOT NOTCH FLANGES OF JOISTS OR STUDS. DOUBLE UP FLOOR JOISTS AND BLOCKING UNDER PARTITIONS. PROVIDE BLOCKING AT SUPPORTS OF ALL JOISTS. DOUBLE UP STUDS AT JAMBS AND AS REQUIRED UNDER BEAMS IN BEARING WALLS.

TYPICAL STUDS SHALL BE DESIGNED FOR L/360 EXCEPT STUDS SUPPORTING VENEER SHALL BE DESIGN FOR MAXIMUM DEFLECTION OF L/600.

STEEL STUD SUPPLIER SHALL DESIGN AND SUPPLY STRUCTURAL STEEL AS REQUIRED FOR COMPLETE CONSTRUCTION OF VERTICAL WALL AWNINGS, SOFFITS, WING PLATES, FASCIA EXTENSIONS, ETC. ANY "RED METAL" OF FABRICATED STRUCTURAL STEEL REQUIRED TO COMPLETE WALL SYSTEMS SHALL BE DESIGNED AND INSTALLED BY STEEL STUD SUPPLIER.

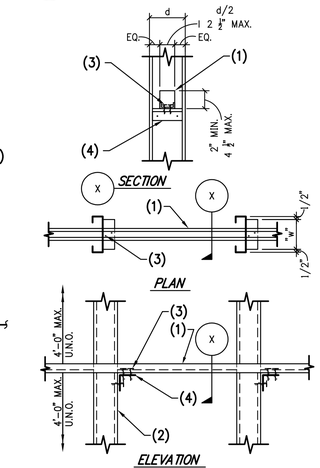

NOTES:
1. 1 1/2"x16GA.x 1/2" FLANGE CRC CONTINUOUS.
2. STUDS PER PLAN.
3. 2– #10 TEK SCREWS AT EACH STUD.
4. SIMPSON 'MSUBH3.25' CLIP WITH 2– #10 TEK SCREWS TO STUDS. ALT: L2x2x16GA.x 0'–5" LONG CLIP.

NOTE:
– 3– CRC BRIDGING PER FLOOR SEE TYPICAL DETAIL 56.
– AT LOCATIONS WHERE CRC IS INTERRUPTED SEE TYPICAL DETAIL 57.
– FOR TYPICAL NON–STRUCTURAL WALL BRIDGING SEE TYPICAL DETAIL 64.

CF6 TYPICAL BRIDGING DETAIL

NO SCALE

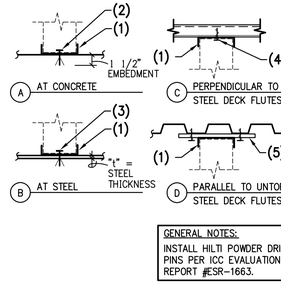

GENERAL NOTES:
INSTALL HILTI POWDER DRIVEN PINS PER ICC EVALUATION REPORT #ESR–1663.

NOTES:
1. STEEL TRACK. DEFLECTION TRACK AS OCCURS.
2. 3/8"ø SIMPSON DROP IN ANCHOR PER SCHEDULE.
3. 0.145ø HILTI X–EDNI POWDER DRIVEN PINS PER SCHEDULE. FOR "t"<1/2", FASTENERS MUST PENETRATE THRU STEEL BASE MATERIAL. FOR "t"=1/2", FASTENERS MUST PENETRATE 9/16" MIN. FOR "t">3/4", FASTENERS MUST PENETRATE 7/16" MIN.
4. #10x3/4" LONG TEKS SCREW PER SCHEDULE.
5. 12"x12x20 GAGE STEEL PLATE WITH 4 #10x 3/4" LONG TEKS SCREWS (ONE EACH CORNER). PLATE SPACING PER SCHEDULE.

TYPICAL TRACK ATTACHMENT

KEY	TYPE A	TYPE B	TYPE C	TYPE D
	ANCHOR SPACING	PIN SPACING	SCREW SPACING	PLATE SPACING
EXTERIOR	12" O.C.	12" O.C.	2 ROWS AT 6" O.C. (4" O.C. ROW SPACING)	12" O.C. (CONT. 12" WIDE PLATE)
INTERIOR	24" O.C.	16" O.C.	12" O.C.	48" O.C.

CF4 TYPICAL STEEL TRACK AT STRUCTURE

NO SCALE

MIN. STEEL STUD PROPERTIES GROSS

SIZE	GAGE	DESIGNATION	Sx(IN^3)	Ix(IN^4)	Fy (KSI)	SPACING	REMARKS L/360	REMARKS L/600
EXTERIOR								
8"	12	800S200–97	2.801	11.203	50	16" O.C.	27'–7"	23'–3"
8"	16	800S200–68	2.035	8.140	50	16" O.C.	24'–10"	20'–11"
6"	12	600S200–97	1.871	5.612	50	16" O.C.	21'–11"	18'–6"
6"	16	600S200–54	1.106	3.319	50	16" O.C.	18'–5"	15'–6"
6"	18	600S162–43	0.767	2.316	33	16" O.C.	16'–4"	13'–9"
6"	20	600S162–33	0.577	1.793	33	16" O.C.	13'–9"	12'–8"
INTERIOR								
6"	20–STRUCTURAL	600S162–33	0.598	1.793	33	16" O.C.	24'–0"	22'–0"
6"	20–STRUCTURAL	600S125–33	0.470	1.479	33	16" O.C.	22'–0"	20'–0"
ALL TRACKS SHALL BE SAME GAGE AS STUDS (18 GAGE MIN) W/ 2" FLANGE								

CF1 MINIMUM STEEL STUD PROPERTIES

NO SCALE

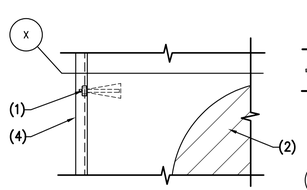

NOTES:
1. 1/2"ø EXP. BOLTS AT 24" O.C. DO NOT CUT VERTICAL REINFORCING.
2. CONCRETE OR MASONRY WALL.
3. LINE OF STEEL STUD WALL AS OCCURS.
4. STEEL STUDS.

CF5 TYPICAL STEEL STUD AT CONCRETE OR MASONRY WALL

NO SCALE

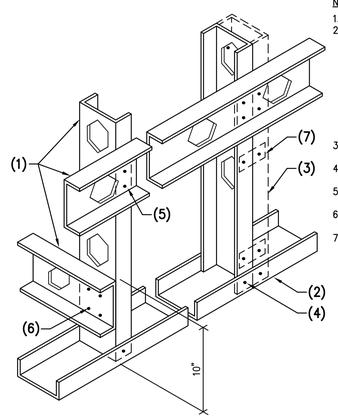

NOTES:
1. STEEL STUD.
2. UNPUNCHED STEEL STUD TRACK – ATTACHMENT REQUIRED 1 HILTI 3/4" LONG X–U TYPE POWDER DRIVEN PINS @ 8" O.C. (I.C.C. #ERS–1663) OR APPROVED EQUAL FOR ALL STUDS 6" OR SMALLER. FOR 8" STUDS USE 2 PINS AT 8: O.C. – TYP. U.N.O.
3. MULTIPLE STUDS WHERE SHOWN ON PLAN OR DETAILS.
4. #10x3/4" LONG TEKS SCREWS EACH SIDE.
5. 2 #10x3/4" LONG TEKS SCREWS.
6. 4 #10x3/4" LONG TEKS SCREWS.
7. 2"x20 GAGE FLAT STRAP BOTH SIDES AT 24" O.C. WITH 1 #10 SCREW AT EACH VERTICAL STUD.

CF2 TYPICAL STEEL STUD WALL – SCREW CONNECTION

NO SCALE

								APP.
								DATE
								REVISIONS
								DATE
								BY
								NO

Registered Professional Engineer
CERTIFICATE NO.
70374
JAMES
APPLEYARD
10/31/25
Date Signed
ARIZONA, U.S.A.

PREPARED BY: PKA
DESIGNED BY: JA
DRAWN BY: NS
CHECKED BY: JA
SCALE: AS NOTED
DATE: SEP 2025
JOB NO. 23364

THESE DRAWINGS ARE THE PROPERTY OF P.A.C.E. AND SHALL NOT BE REPRODUCED IN ANY MANNER NOR BE USED FOR CONSTRUCTION UNLESS STAMPED "ISSUED FOR CONSTRUCTION".

TITLE: TYPICAL DETAILS

JOB: TOWN OF JEROME
WASTEWATER
TREATMENT PLANT
YAVAPAI AZ

ISSUED FOR BID

PREPARED BY:
PACE
Advanced Water Engineering
8723 E. VIA de VENTURA, SUITE A-140, SCOTTSDALE, CA 85258
P: (480) 991-3555 | www.pacewater.com
TAYLOR B. PIERCE R.C.E 70097 DATE

SHEET
S1.6
57 OF 99 SHEETS

JOB NO. 23364

FOR GENERAL PRICING INFORMATION ONLY, COMPLETE DESIGN AND SHOP DRAWINGS TO BE SUPPLIED AND SUBMITTED BY STUD SUPPLIER

PK ASSOCIATES, LLC
6900 E. Belleview Ave. #200
Greenwood Village, Colorado 80111
Phone: (720) 799-1058
Email: cadd@pkastructural.com
Website: www.pkastructural.com

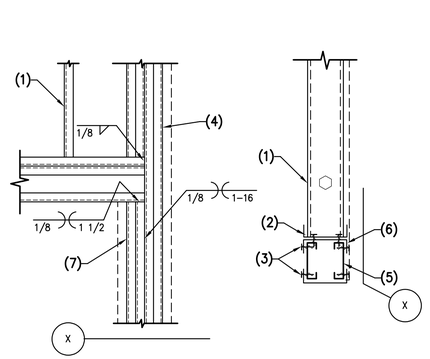

NOTES:

1. STEEL STUD WALL.
2. CONT. 16 GAGE TRACK W/ 2 – #12 TEK SCREWS AT 12" O.C. STAGGERED THROUGH TRACKS TO STUDS BELOW.
3. #12 TEK SCREWS AT 12" O.C., EACH LEG OF TRACK.
4. 2 (FULL HEIGHT) JAMB STUDS MIN. REFER TO SCHEDULE BELOW FOR ADDITIONAL STUDS WHERE REQUIRED.
5. STEEL HEADER PER SCHEDULE.
6. CONT. STEEL TRACK – TOP AND BOTTOM. REFER TO SCHEDULE FOR HEAVIER GAGE WHERE REQUIRED.
7. DOUBLE TRIMMER STUD, 16 GA. MIN. (ADD ONE ADDITIONAL STUDS AT EVERY 4'–0" OPENING. INCREASE AFTER 6'–0" WIDE).
8. TYPICAL PINS OR SCREWS AT 2" O.C. EACH SIDE FOR EVERY STUD IN THE GROUP.
9. TYPICAL CLIP ANGLE, ONE FOR EVERY TWO STUDS.

NOTE:

– FOR OPENING LARGER THAN SHOWN – SEE FRAMING PLAN
– ALL HEADER'S STUDS AND TRACKS SHALL BE UNPUNCHED MEMBERS.

OPENING	EXTERIOR WALLS		INTERIOR WALLS			
	HEADER SIZE (6" WALL)	JAMB STUDS (6" WALL)	HEADER SIZE		JAMB STUDS	
			4" WALL	6" WALL	4" WALL	6" WALL
0" – 4'–0"	2– 6"x20 GA (600S137–33) STUDS AND 2– 6"x18 GA (600T125–43) TRACKS	2– 6"x16 GA (600S200–54)	2– 6"x20 GA (600S137–33) STUDS AND 2– 4"x18 GA (400T125–43) TRACKS	2– 6"x20 GA (600S137–33) STUDS AND 2– 6"x18 GA (600T125–43) TRACKS	2– 4"x20 GA (400S137–33)	2– 6"x20 GA (600S137–33)
4'–1" – 6'–0"	2– 6"x20 GA (600S137–33) STUDS AND 2– 6"x18 GA (600T125–43) TRACKS	2– 6"x16 GA (600S200–54)	2– 6"x20 GA (600S137–33) STUDS AND 2– 4"x18 GA (400T125–43) TRACKS	2– 6"x20 GA (600S137–33) STUDS AND 2– 6"x18 GA (600T125–43) TRACKS	2– 4"x20 GA (400S137–33)	2– 6"x20 GA (600S137–33)
6'–1" – 8'–0"	2– 6"x18 GA (600S162–43) STUDS AND 2– 6"x18 GA (600T125–43) TRACKS	2– 6"x16 GA (600S200–54)	2– 6"x20 GA (600S137–33) STUDS AND 2– 4"x18 GA (400T125–43) TRACKS	2– 6"x20 GA (600S137–33) STUDS AND 2– 6"x18 GA (600T125–43) TRACKS	2– 4"x20 GA (400S137–33)	2– 6"x20 GA (600S137–33)
8'–1" – 10'–0"	2– 6"x16 GA (600S200–54) STUDS AND 2– 6"x18 GA (600T125–43) TRACKS	3– 6"x16 GA (600S200–54)	2– 6"x20 GA (600S137–33) STUDS AND 2– 4"x18 GA (400T125–43) TRACKS	2– 6"x20 GA (600S137–33) STUDS AND 2– 6"x18 GA (600T125–43) TRACKS	2– 4"x20 GA (400S137–33)	2– 6"x20 GA (600S137–33)
10'–1" – 12'–0"	3– 6"x16 GA (600S250–54) STUDS AND 2– 6"x16 GA (600T200–54) TRACKS	3– 6"x16 GA (600S200–54)	3– 6"x20 GA (600S137–33) STUDS AND 2– 4"x16 GA (400T150–54) TRACKS	3– 6"x20 GA (600S137–33) STUDS AND 2– 6"x18 GA (600T125–43) TRACKS	2– 4"x20 GA (400S137–33)	2– 6"x20 GA (600S137–33)
12'–1" – 14'–0"	3– 8"x16 GA (800S250–54) STUDS AND 2– 6"x14 GA (600T200–68) TRACKS	4– 6"x16 GA (600S200–54)	3– 8"x20 GA (800S137–33) STUDS AND 2– 4"x16 GA (400T200–54) TRACKS	3– 8"x20 GA (800S137–33) STUDS AND 2– 6"x18 GA (600T125–43) TRACKS	2– 4"x20 GA (400S137–33)	2– 6"x20 GA (600S137–33)
14'–1" – 16'–0"	3– 8"x14 GA (800S200–68) STUDS AND 3– 6"x14 GA (600T200–68) TRACKS	5– 6"x16 GA (600S200–54)	3– 8"x18 GA (800S137–43) STUDS AND 3– 4"x16 GA (400T200–54) TRACKS	3– 8"x18 GA (800S137–43) STUDS AND 2– 6"x18 GA (600T125–43) TRACKS	2– 4"x20 GA (400S162–33)	2– 6"x20 GA (600S137–33)
CONTINUOUS SPANDREL OPENING	2– 6"x18 GA (600S162–43) STUDS AND 2– 6"x18 GA (600T125–43) TRACKS	N/A USE BRACE PER DETAIL	2– 6"x20 GA (600S137–33) STUDS AND 2– 4"x18 GA (400T125–43) TRACKS	2– 6"x20 GA (600S137–33) STUDS AND 2– 6"x18 GA (600T125–43) TRACKS	N/A USE BRACE PER DETAIL	N/A USE BRACE PER DETAIL
DESIGN HEIGHT IS 16'–0" OR LESS, IF GREATER HEIGHT REQUIRED USE BRACES ACROSS OPENING. VERIFY BRACES ARE ABOVE CEILING LINE.						

CF6 *HEADER IN NON–BEARING STEEL STUD WALL*

NO SCALE

NO	BY	DATE	REVISIONS	DATE	APP.

THESE DRAWINGS ARE THE PROPERTY OF P.A.C.E. AND SHALL NOT BE REPRODUCED IN ANY MANNER NOR BE USED FOR CONSTRUCTION UNLESS STAMPED "ISSUED FOR CONSTRUCTION".

Registered Professional Engineer (Civil) CERTIFICATE NO. 70374 JAMES APPLEYARD 10/31/25 Date Signed ARIZONA, U.S.A.

PREPARED BY: PKA
DESIGNED BY: JA
DRAWN BY: NS
CHECKED BY: JA
SCALE: AS NOTED
DATE: SEP 2025
JOB NO.: 23364

TITLE: **TYPICAL DETAILS**

JOB: TOWN OF JEROME WASTEWATER TREATMENT PLANT
YAVAPAI AZ

ISSUED FOR BID

PREPARED BY:
PACE
Advanced Water Engineering
8723 E. Via de Ventura Suite 260 | SCOTTSDALE, CA 85258
P: (480) 991-3995 | www.paceadvisor.com
TAYLOR B. PIERCE R.C.E 70097 DATE

SHEET
S1.7
58 OF 99 SHEETS

JOB NO. 23364

PK ASSOCIATES, LLC
6900 E. Belleview Ave. #200
Greenwood Village, Colorado 80111
Phone: (720) 799-1058
Email: cadd@pkastructural.com
Website: www.pkastructural.com

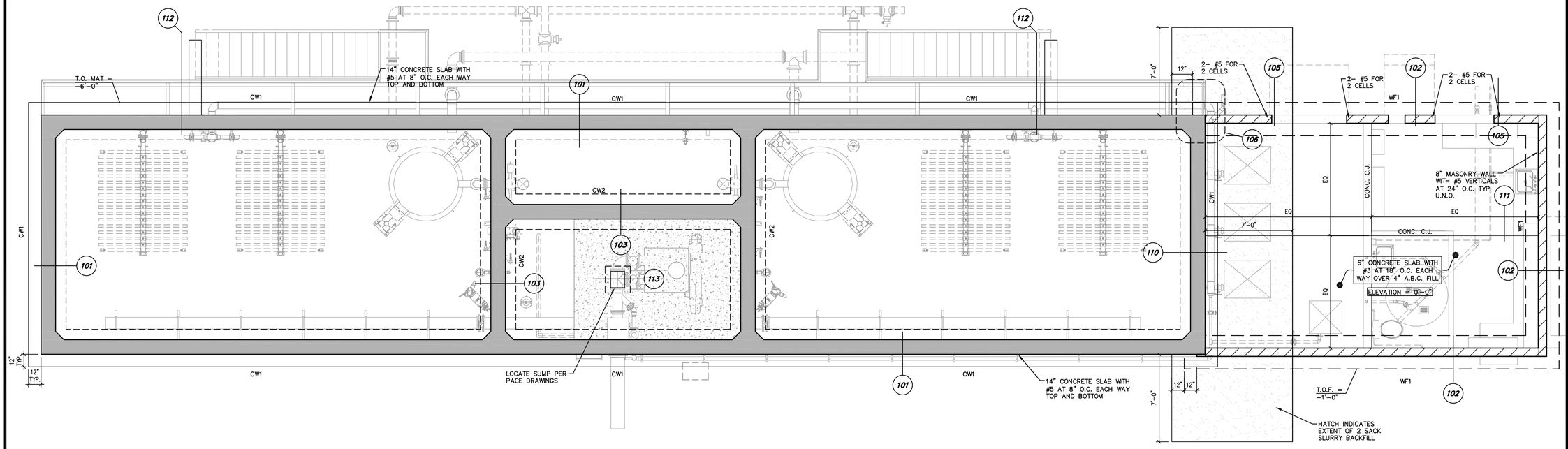

1 FOUNDATION PLAN

SCALE: 1/4"=1'-0"

CONCRETE WALL (CW) SCHEDULE

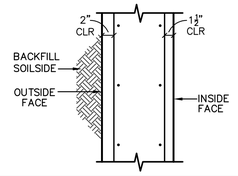

MARK	t	VERTICAL REINF. INSIDE FACE	VERTICAL REINF. OUTSIDE FACE	HORIZONTAL REINF. INSIDE FACE	HORIZONTAL REINF. OUTSIDE FACE	REMARKS
CW1	14"	#9 AT 6" O.C.	#5 AT 8" O.C.	#5 AT 8" O.C.	#5 AT 8" O.C.	TYP. U.N.O.
CW2	14"	#9 AT 6" O.C.	#9 AT 6" O.C.	#5 AT 8" O.C.	#5 AT 8" O.C.	TYP. U.N.O.

*NOTE: AT BOTTOM OF ALL WALLS PROVIDE SPECIAL HORIZONTAL REINFORCING AND U-BARS AT SHOWN IN DETAILS 119 AND 120 -TYPICAL

CONTINUOUS FOOTING (WF) SCHEDULE

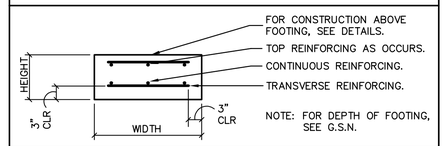

MARK	DIMENSIONS HEIGHT	DIMENSIONS WIDTH	FOOTING REINFORCING	REMARKS
WF1	12"	2'-6"	3- #5 CONTINUOUS	---

ISSUED FOR BID

PREPARED BY: PACE
Advanced Water Engineering
8723 E. Via de Commercio, Suite 1, SCOTTSDALE, CA 85258
P: (480) 991-3595 | www.pacewater.com
TAYLOR B. PIERCE R.C.E 70097 DATE

NO	BY	DATE	REVISIONS	DATE	APP.

Registered Professional Engineer (Civil) CERTIFICATE NO. 70374 JAMES APPLEYARD 10/31/25 Date Signed ARIZONA, U.S.A.

PREPARED BY:	PKA
DESIGNED BY:	JA
DRAWN BY:	NS
CHECKED BY:	JA
SCALE:	AS NOTED
DATE	SEP 2025
JOB NO.	23364

TITLE: FOUNDATION PLAN

JOB: TOWN OF JEROME WASTEWATER TREATMENT PLANT YAVAPAI AZ

SHEET S2.00
59 OF 99 SHEETS

JOB NO. 23364

THESE DRAWINGS ARE THE PROPERTY OF P.A.C.E. AND SHALL NOT BE REPRODUCED IN ANY MANNER NOR BE USED FOR CONSTRUCTION UNLESS STAMPED "ISSUED FOR CONSTRUCTION".

PK ASSOCIATES, LLC
6900 E. Belleview Ave. #200
Greenwood Village, Colorado 80111
Phone: (720) 799-1058
Email: cadd@pkastructural.com
Website: www.pkastructural.com

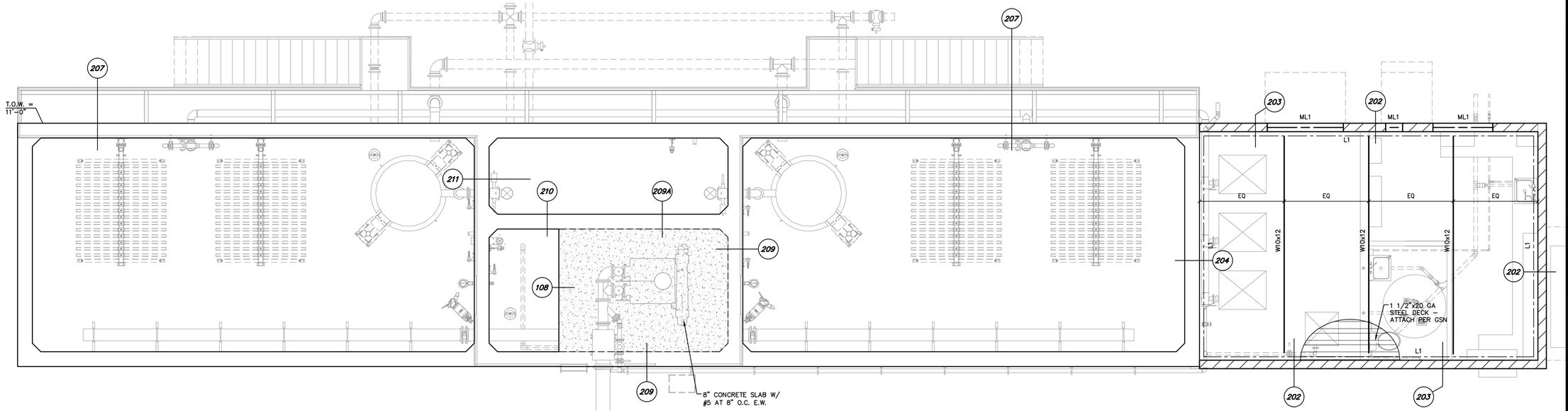

1 FRAMING PLAN

SCALE: 1/4"=1'-0"

LEDGER (L) SCHEDULE

STEEL: 1. ALL LEDGERS SHALL HAVE MINIMUM OF 2 WELD PLATES OR ANCHOR BOLTS AS NOTED BELOW.
2. WELD PLATES OR ANCHOR BOLTS SHALL BE LOCATED NOT LESS THAN 6" NOR MORE THAN 1'-4" FROM END OF LEDGER OR LEDGER SPLICE.

MARK	SIZE / TYPE	CONNECTION
L1	L4x4x1/4"	EMBED PER DETAIL 202 AND 204 AT 48" O.C.

MASONRY LINTEL (ML) SCHEDULE

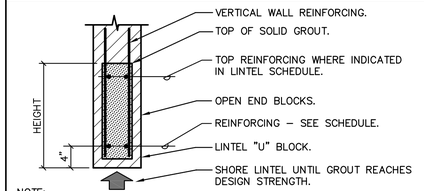

NOTE:
1. VERTICAL REINFORCING TO MATCH AND LAP WALL REINFORCING PER G.S.N.
2. EXTEND GROUT, OPEN END MASONRY UNITS AND REINFORCING 2'-0" PAST EACH JAMB. USE CORNER BARS WHERE 2'-0" CANNOT BE ACHIEVED.

MARK	HEIGHT	REINFORCING	REMARKS
ML1	16"	2- #5 BOTTOM	---

NO	BY	DATE	REVISIONS	DATE	APP.

Registered Professional Engineer (Civil) CERTIFICATE NO. 70374 JAMES APPLEYARD Date Signed 10/31/25 ARIZONA, U.S.A.

PREPARED BY: PKA
DESIGNED BY: JA
DRAWN BY: NS
CHECKED BY: JA
SCALE: AS NOTED
DATE: SEP 2025
JOB NO.: 23364

THESE DRAWINGS ARE THE PROPERTY OF P.A.C.E. AND SHALL NOT BE REPRODUCED IN ANY MANNER NOR BE USED FOR CONSTRUCTION UNLESS STAMPED "ISSUED FOR CONSTRUCTION".

TITLE: FRAMING PLAN

JOB: TOWN OF JEROME WASTEWATER TREATMENT PLANT — YAVAPAI AZ

ISSUED FOR BID

PREPARED BY: PACE Advanced Water Engineering
8723 E. VIA de VENTURA, STE. 290 | SCOTTSDALE, CA 85258
P: (480) 991-3595 | www.paceadvisor.com
TAYLOR B. PIERCE R.C.E 70097 DATE

SHEET S2.01
60 OF 99 SHEETS

JOB NO. 23364

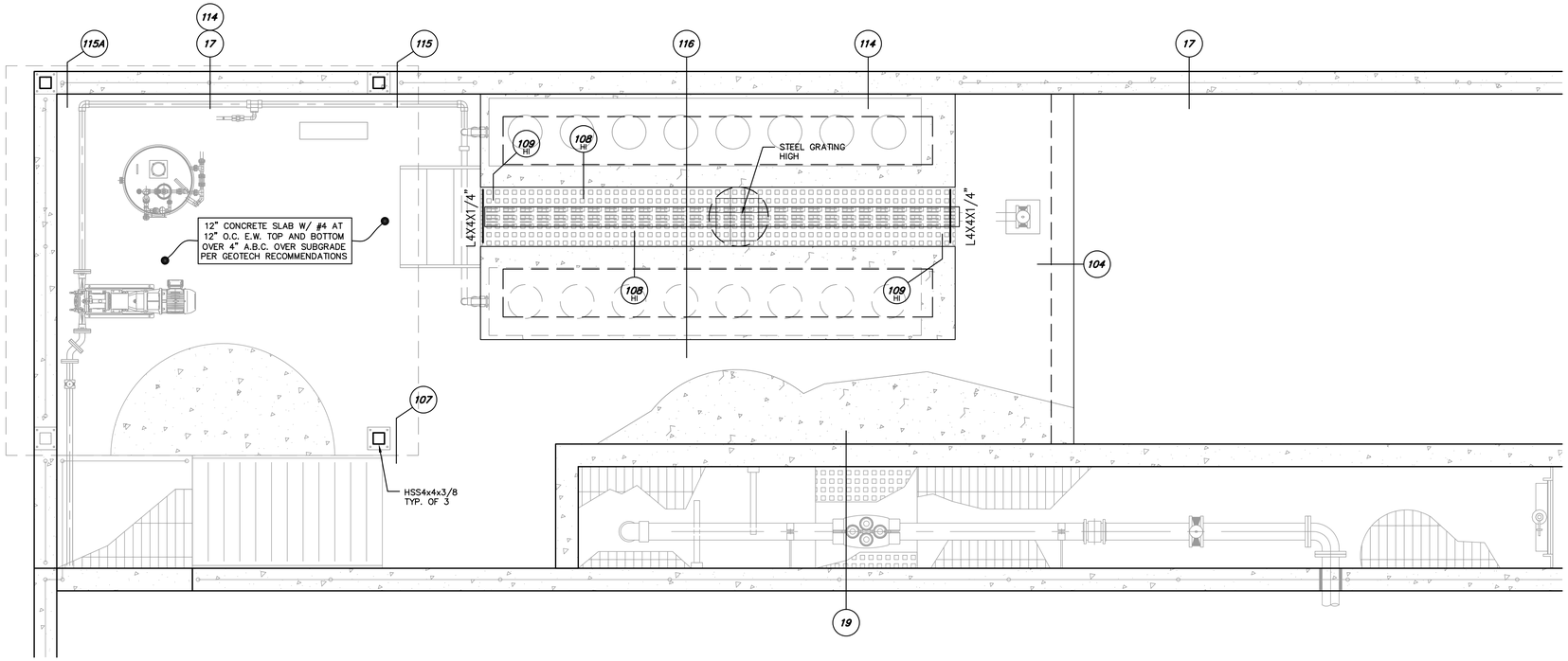

1 PLAN - DEWATERING PAD

SCALE: 1/2"=1'-0"

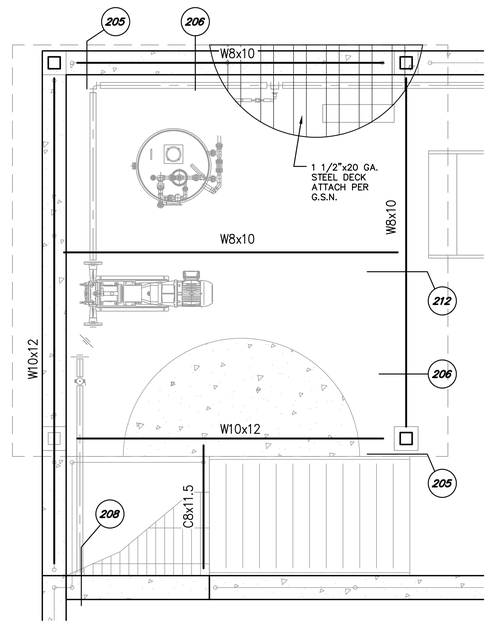

2 SHADE STRUCTURE - FRAMING PLAN

SCALE: 1/2"=1'-0"

PK ASSOCIATES, LLC
6900 E. Belleview Ave. #200
Greenwood Village, Colorado 80111
Phone: (720) 799-1058
Email: cadd@pkastructural.com
Website: www.pkastructural.com

NO	BY	DATE	REVISIONS	DATE	APP.

Registered Professional Engineer (AZ)
CERTIFICATE NO.
70374
JAMES
APPLEYARD
Date Signed 10/31/25
ARIZONA, U.S.A.

PREPARED BY: PKA
DESIGNED BY: JA
DRAWN BY: NS
CHECKED BY: JA
SCALE: AS NOTED
DATE: SEP 2025
JOB NO. 23364

THESE DRAWINGS ARE THE PROPERTY OF P.A.C.E. AND SHALL NOT BE REPRODUCED IN ANY MANNER NOR BE USED FOR CONSTRUCTION UNLESS STAMPED 'ISSUED FOR CONSTRUCTION'.

TITLE
FRAMING PLAN

JOB
TOWN OF JEROME
WASTEWATER
TREATMENT PLANT
YAVAPAI AZ

ISSUED FOR BID

PREPARED BY:
PACE
Advanced Water Engineering
8723 E. VIA DE COMERCIO, STE A, SCOTTSDALE, CA 85258
P: (408) 991-3595 | W: www.pacewater.com
TAYLOR B. PIERCE R.C.E 70097 DATE

SHEET
S2.10
61 OF 99 SHEETS

JOB NO. 23364

NOTES:

1. CONCRETE SLAB/WALL.
2. CONT. L2x2x1/4" W/ 1/2"ø H.S. AT AT 18" O.C.
3. GRATING AND ATTACHMENT BY OTHERS.

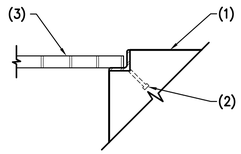

108 GRATING AT CONCRETE SLAB/WALL

NO SCALE

NOTES:

1. MASONRY WALL BEYOND.
2. CONCRETE SLAB WHERE OCCURS.
3. FINISHED GRADE.
4. SOLID GROUTED MASONRY STEM WALL AND CONCRETE FOOTING WITH REINFORCING CONTINUOUS FROM BEYOND.
5. CONCRETE SLAB ON GRADE, TOOLED EDGE AT OPENING.
6. DEPRESS STEM WALL 8" MIN.
7. VARIES – SEE PLANS FOR SIZE AND REINF.

NOTE:

– AT CONTRACTOR'S OPTION, USE CONCRETE STEM WALL W/ SAME REINFORCING.

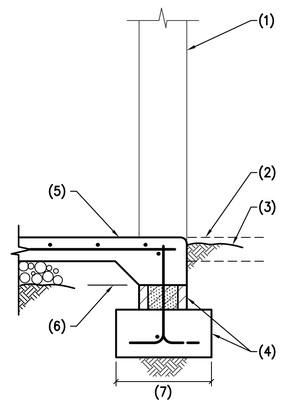

105 EXTERIOR MASONRY WALL FOOTING AT OPENING

NO SCALE

NOTES:

1. CONCRETE WALL.
2. CONCRETE FOOTING MAT SLAB
3. DOWELS TO MATCH AND LAP VERTICAL WALL REINFORCING.
4 CONCRETE SLAB OR FINISHED GRADE AS OCCURS.
5. CONTINUOUS KEYED JOINT.
6. 6" WATER STOP.
7. #5 BAR CONT. AT HOOK.
8. MIRA DRAIN BY CARLISE COATING AND WATERPROOFING, INC. OR APPROVED EQUAL.

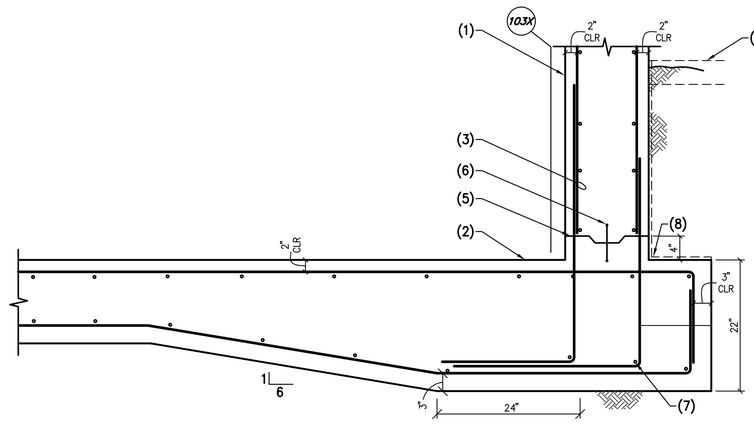

101 CONCRETE WALL AT EDGE OF MAT FOUNDATION

NO SCALE

NOTES:

1. CONCRETE WALL.
2. CONCRETE FOOTING.
3. FOOTING REINFORCING.
4. DOWELS TO MATCH AND LAP FOOTING REINFORCING.
5. 90° HOOK.

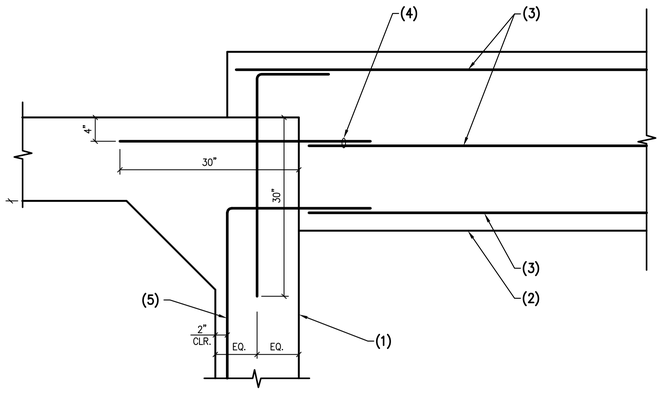

106 PLAN – CONCRETE FOOTING AT CONCRETE WALL

NO SCALE

NOTES:

1. STEEL ANGLE.
2. 1/4" STEEL PLATE.
3. GRATING AND ATTACHMENT BY OTHERS.

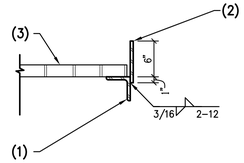

104 GRATING AT STEEL ANGLE

NO SCALE

NOTES:

1. 1 #4 CONTINUOUS.
2. FINISHED GRADE OR CONCRETE SLAB WHERE OCCURS.
3. CONCRETE FOOTING.
4. MASONRY WALL – GROUT SOLID BELOW GRADE.
5. DOWELS TO MATCH AND LAP VERTICAL WALL REINFORCING PER G.S.N. – ALTERNATE BENDS.
6. CONCRETE SLAB.
7. GRADE VARIES AS REQ'D. SOLID GROUT WALL BELOW GRADE.

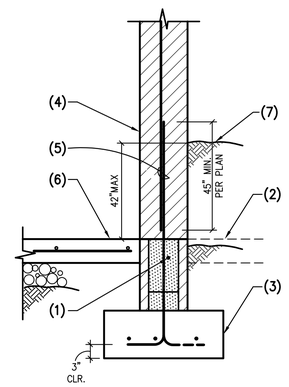

NOTE:

AT CONTRACTOR'S OPTION, USE CONCRETE STEM WALL W/ SAME REINFORCING.

102 EXTERIOR MASONRY WALL FOOTING

NO SCALE

NOTES:

1. CONCRETE SLAB/WALL.
2. CONT. L2x2x1/4" STEEL ANGLE W/ 1/2"ø H.S. AT 4" O.C. AT STEEL ANGLE.
3. 1/2"x6"x6" STEEL PLATE W/ 2– 1/2"ø H.S. AT 4" O.C.
4. STEEL ANGLE.
5. GRATING AND ATTACHMENT BY OTHERS.

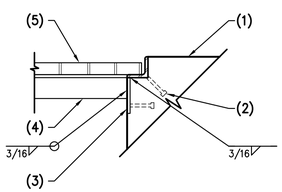

109 STEEL ANGLE AT CONCRETE WALL/SLAB

NO SCALE

NOTES:

1. STEEL COLUMN.
2. 1/2"x10"x10" STEEL PLATE W/ 4– 3/4"ø F1554 GR36 A.B. AT 7" O.C.
3. ±1 1/2" DRYPACK.
4. CONCRETE SLAB.

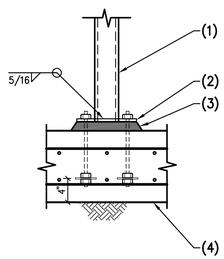

107 STEEL COLUMN AT CONCRETE SLAB

NO SCALE

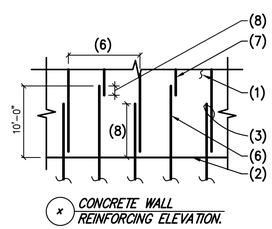

(x) CONCRETE WALL REINFORCING ELEVATION.

NOTES:

1. CONCRETE WALL.
2. CONCRETE FOOTING.
3. DOWELS TO MATCH AND LAP VERTICAL WALL REINFORCING.
4 #5 BAR CONTINUOUS AT HOOK.
5. CONTINUOUS KEYED JOINT.
6. DOWEL TO MATCH SCHEDULED WALL REINFORCING.
7. EVER OTHER VERTICAL BAR MAY LAP W/ A #5.
8. CLASS "B" TENSION LAP.

103 CONCRETE WALL AT MAT FOUNDATION

NO SCALE

PK ASSOCIATES, LLC
6900 E. Belleview Ave. #200
Greenwood Village, Colorado 80111
Phone: (720) 799-1058
Email: cadd@pkastructural.com
Website: www.pkastructural.com

NO	BY	DATE	REVISIONS	DATE	APP.

Registered Professional Engineer (Civil) CERTIFICATE NO. 70374 JAMES APPLEYARD 10/31/25 Date Signed ARIZONA, U.S.A.

PREPARED BY: PKA
DESIGNED BY: JA
DRAWN BY: NS
CHECKED BY: JA
SCALE: AS NOTED
DATE: SEP 2025
JOB NO. 23364

THESE DRAWINGS ARE THE PROPERTY OF P.A.C.E. AND SHALL NOT BE REPRODUCED IN ANY MANNER NOR BE USED FOR CONSTRUCTION UNLESS STAMPED "ISSUED FOR CONSTRUCTION".

TITLE: FOUNDATION DETAILS

JOB: TOWN OF JEROME WASTEWATER TREATMENT PLANT — YAVAPAI AZ

ISSUED FOR BID

PREPARED BY: PACE Advanced Water Engineering
8723 E. VIA de VENTURA, SUITE 200 | SCOTTSDALE, CA 85258
P: (480) 991-3995 | www.paceadvisor.com
TAYLOR B. PIERCE R.C.E 70097 DATE

SHEET S3.1
62 OF 99 SHEETS

JOB NO. 23364

NOTES:
1. CONCRETE SLAB.
2. ALUMINUM GRATING.
3. 6" CONCRETE WALL/ SLAB W/ #4 AT 6"O.C. E.W.
4. WATERSTOP PER PACE DRAWINGS.
5. L3x3x1/4 W/ 1/2"ø HILTI SS KWIK BOLT T2 SCREW ANCHOR, OR APPROVED EQUAL. 2 ANCHORS EACH SIDE AT 9" O.C.

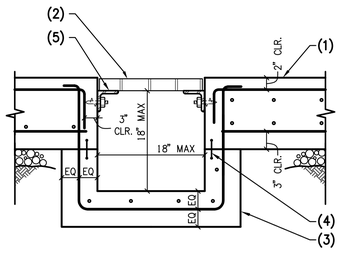

113 *SUMP PIT AT CONCRETE SLAB*

NO SCALE

NOTES:
1. CONCRETE WALL.
2. CONCRETE SLAB.
3. #5x30"x12" AT 12" O.C.
4. CONT. #5 AT BEND.

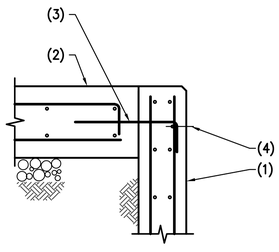

114 *CONCRETE SLAB AT CONCRETE WALL*

NO SCALE

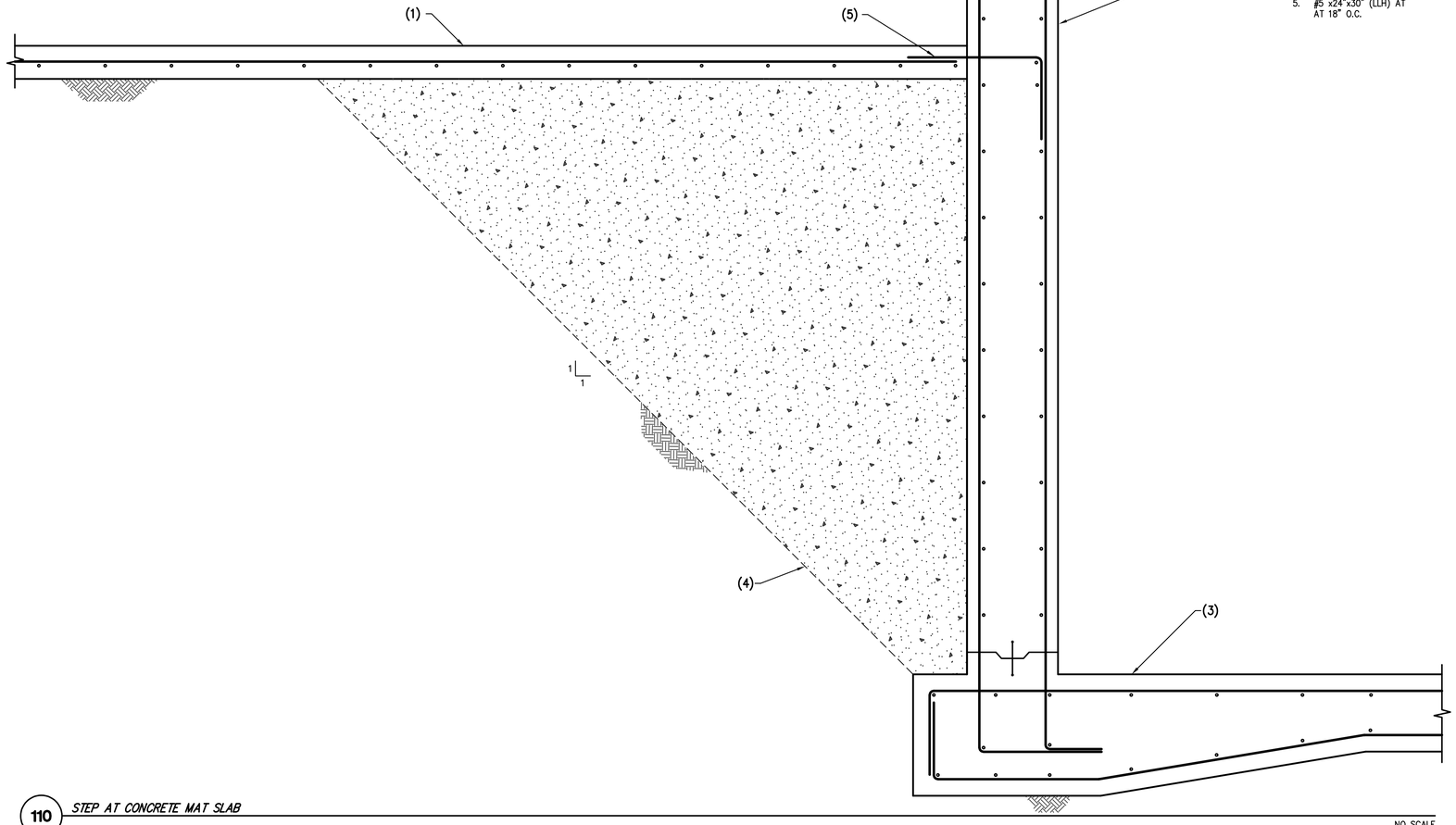

110 *STEP AT CONCRETE MAT SLAB*

NO SCALE

NOTES:
1. CONCRETE SLAB.
2. CONCRETE WALL.
3. CONCRETE MAT SLAB.
4. LEAN CONCRETE INFILL.
5. #5 x24"x30" (LLH) AT AT 18" O.C.

NOTES:
1. CONCRETE WALL.
2. CONCRETE SLAB.
3. #5x30"x12" AT 12" O.C.
4. CONT. #5 AT BEND.
5. STEEL POST.
6. 1/2"x12"x6" STEEL PLATE W/ 2– #5x30" A706 WELDABLE REBAR AT 9" O.C. AND 3/4"ø H.S. CENTERED.
7. 1/2" STEEL PLATE.
8. 2– #5x30" A706 WELDABLE REBAR.
9. 3/4"ø H.S.

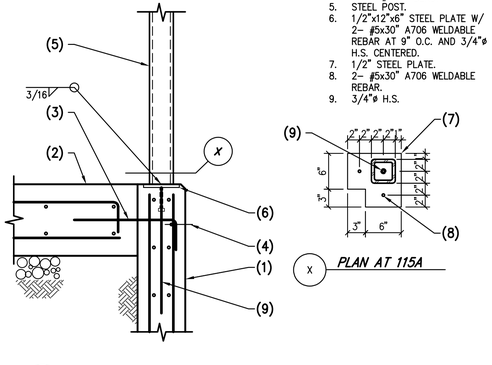

115 *CONCRETE SLAB AT CONCRETE WALL*

115A *AS NOTED*

NO SCALE

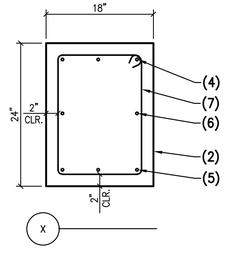

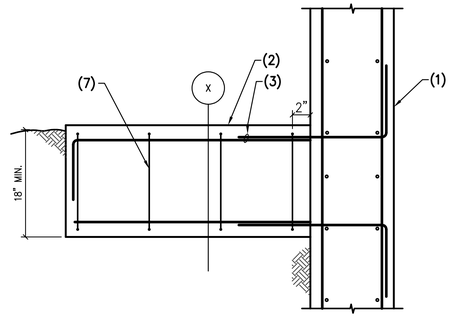

112 *STAIR FOOTING AT CONCRETE WALL*

NO SCALE

NOTES:
1. CONCRETE WALL.
2. STAIR CONCRETE FOOTING.
3. DOWELS TO MATCH AND LAP FOOTING REINFORCING.
4. 4– #6 TOP.
5. 3– #5 BOTTOM.
6. #5 EACH FACE.
7. #4 AT 12" O.C.

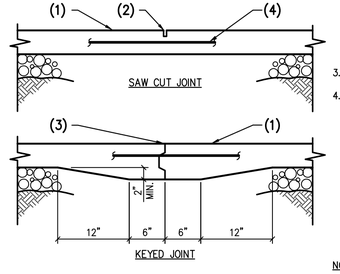

NOTES:
1. CONCRETE SLAB ON GRADE.
2. SAWCUT – 1/8" WIDE x 1/4 SLAB THICKNESS IN DEPTH – CUT SHALL BE MADE SOON ENOUGH TO PREVENT SHRINKAGE CRACKING, BUT NOT SO SOON AS TO CAUSE SPALLING OF THE CONCRETE WHILE SAWING. WORK MUST BE ACCOMPLISHED WITHIN 24 HOURS OF CONCRETE PLACEMENT.
3. CONTINUOUS KEY – SEE TYPICAL KEY IN CONCRETE DETAIL.
4. CUT 1/2" REINFORCEMENT ACROSS C.J. DO NOT CUT AT RAMP.

NOTE:
KEYED JOINTS NEED ONLY OCCUR AT EXPOSED EDGES DURING PLACEMENT UNLESS SPECIFICALLY NOTED ON THE PLANS. "TOOL WET JOINT", "ZIP STRIP", ETC. SHALL MATCH SAWCUT REQUIREMENTS.

111 *CONTROL JOINTS IN CONCRETE SLAB ON GRADE*

NO SCALE

PK ASSOCIATES, LLC
6900 E. Belleview Ave. #200
Greenwood Village, Colorado 80111
Phone: (720) 799-1058
Email: cadd@pkastructural.com
Website: www.pkastructural.com

NO	BY	DATE	REVISIONS	DATE	APP.

Registered Professional Engineer (Civil) CERTIFICATE NO. 70374 JAMES APPLEYARD Date Signed 10/31/25 ARIZONA, U.S.A.

PREPARED BY: PKA
DESIGNED BY: JA
DRAWN BY: NS
CHECKED BY: JA
SCALE: AS NOTED
DATE: SEP 2025
JOB NO.: 23364

THESE DRAWINGS ARE THE PROPERTY OF P.A.C.E. AND SHALL NOT BE REPRODUCED IN ANY MANNER NOR BE USED FOR CONSTRUCTION UNLESS STAMPED "ISSUED FOR CONSTRUCTION".

TITLE: **FOUNDATION DETAILS**

JOB: TOWN OF JEROME
WASTEWATER
TREATMENT PLANT
YAVAPAI AZ

ISSUED FOR BID

PREPARED BY:

PACE
Advanced Water Engineering
8723 E. VIA DE COMMERCIO, 3RD FLOOR, SCOTTSDALE, CA 85258
P: (480) 991-3595 | W: www.pacewater.com

TAYLOR B. PIERCE R.C.E. 70097 DATE

SHEET **S3.2**
63 OF 99 SHEETS

JOB NO. 23364

PK ASSOCIATES, LLC
6900 E. Belleview Ave. #200
Greenwood Village, Colorado 80111
Phone: (720) 799-1058
Email: cadd@pkastructural.com
Website: www.pkastructural.com

NOTES:

1. CONCRETE SLAB.
2. 8" CONCRETE WALL/SLAB W/ #5 AT 12" O.C. EACH WAY.
3. HIGH DENSITY FOAM.
4. GRATING AND ATTACHMENT PER SHEET M5.3.
5. DOWELS TO MATCH AND LAP WALL REINFORCING.
6. 2 CONT. #4.
7. #4x60" AT 12" O.C.
8. EQUIPMENT AND ATTACHMENT BY OTHERS.
9. CONCRETE WALL.

116 SECTION – DEWATERING PLAN

NO SCALE

NO	BY	DATE	REVISIONS	DATE	APP.

Registered Professional Engineer (Civil)
CERTIFICATE NO.
70374
JAMES APPLEYARD
Date Signed 10/31/25
ARIZONA, U.S.A.

PREPARED BY: PKA
DESIGNED BY: JA
DRAWN BY: NS
CHECKED BY: JA
DATE: SEP 2025
SCALE: AS NOTED
JOB NO.: 23364

TITLE: **FOUNDATION DETAILS**

JOB: TOWN OF JEROME
WASTEWATER
TREATMENT PLANT
YAVAPAI AZ

ISSUED FOR BID

PREPARED BY:
PACE
Advanced Water Engineering
8723 E. VIA DE COMERCIO, STE A-104, SCOTTSDALE, CA 85258
P.: (480) 991-3595 | www.pacewater.com
TAYLOR B. PIERCE R.C.E 70097 DATE

SHEET
S3.3
64 OF 99 SHEETS

JOB NO. 23364

THESE DRAWINGS ARE THE PROPERTY OF P.A.C.E. AND SHALL NOT BE REPRODUCED IN ANY MANNER NOR BE USED FOR CONSTRUCTION UNLESS STAMPED "ISSUED FOR CONSTRUCTION".

PK ASSOCIATES, LLC
6900 E. Belleview Ave. #200
Greenwood Village, Colorado 80111
Phone: (720) 799-1058
Email: cadd@pkastructural.com
Website: www.pkastructural.com

NOTES:
1. CONCRETE WALL.
2. CONCRETE SLAB.
3. #5x 36" ⌐ 36" AT SPACING TO MATCH SLAB REINFORCING.
4. CONT. BAR AT HOOK.
5. GRATING AT 209A PER DETAIL 108.

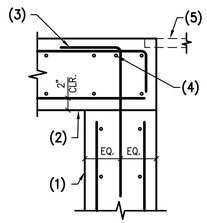

209 CONCRETE WALL AT CONCRETE WALL
209A AS NOTED
NO SCALE

NOTES:
1. STEEL BEAM.
2. STEEL DECK – SEE PLANS FOR DIRECTION.
3. 1/4" CONTINUOUS BENT PLATE.

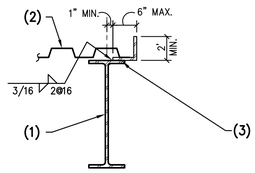

206 STEEL ROOF DECK AT STEEL BEAM
NO SCALE

NOTES:
1. CONCRETE WALL.
2. 1/2"x8"x4" STEEL PLATE W/ 2– 1/2"ø H.S. AT 5" O.C.
3. CONTINUOUS LEDGER ANGLE.
4. STEEL DECK.

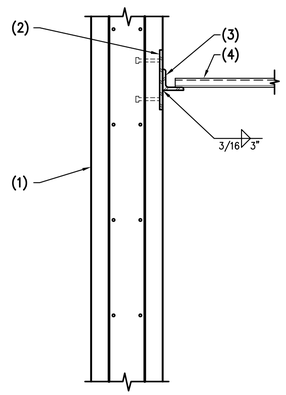

204 LEDGER ANGLE AND STEEL DECK AT CONCRETE WALL
NO SCALE

NOTES:
1. STEEL LEDGER ANGLE – FOR SIZE AND LOCATION, SEE PLAN.
2. STEEL PLATE 1/2"x3"x12" LONG.
3. STEEL PLATE 1/2"x3".

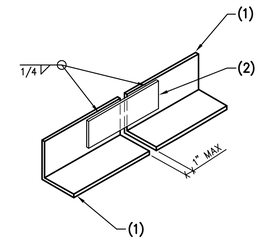

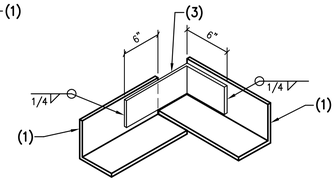

AT CORNERS

201 TYPICAL SPLICE IN CONTINUOUS STEEL LEDGER ANGLE
NO SCALE

NOTES:
1. CONCRETE WALL.
2. CONT. L2x2x1/4" W/ 1/2"ø H.S. AT 18" O.C.
3. GRATING AND ATTACHMENT BY OTHERS.

210 STEEL GRATING AT CONCRETE WALL
NO SCALE

NOTES:
1. CONCRETE WALL.
2. C6x8.2 AT 4'–0" O.C. MAX.
3. CONT. L4x4x1/4.
4. CONT. L2x2x1/4" W/ 1/2"ø H.S. AT 18" O.C.
5. GRATING AND ATTACHMENT BY OTHERS.
6. COPE TOP FLANGE.
7. 1/2"x8"x8" STEEL PLATE W/ 2– 3/4"ø H.S. AT 5" O.C.
8. 3– 3/4"ø H.S. AT 4" O.C. CENTERED ON CHANNEL.
9. HANDRAIL POST AND ATTACHMENT BY OTHERS. (4'–0" O.C. MAX).
10. 1/2"x8"x4" STEEL PLATE W/ 2– 3/4"ø H.S. AT 5" O.C.

207 WALKWAY AT CONCRETE WALL
NO SCALE

NOTES:
1. HSS SQUARE OR RECTANGULAR COLUMN.
2. STEEL BEAM.
3. STEEL SHEAR PLATE. SEE TYP. BOLT SCHEDULE.
4. FOR SIZE, TYPE, AND NUMBER OF BOLTS, REFER TO TYP. BOLT SCHEDULE.
5. 1/2" STEEL CAP PLATE.
6. AT t ≤ 1/4" USE FILLET WELD SIZE TO MATCH "t". AT t > 1/4" USE 5/16" FILLET.
7. 1/2" STEEL BACKER PLATE x BEAM DEPTH x WIDTH OF COLUMN LESS 1".
8. TOP OF COLUMN AS OCCURS.
9. DEPTH TO MATCH JOIST SHOE.
10. BEAM BOTH SIDES WHERE OCCURS.

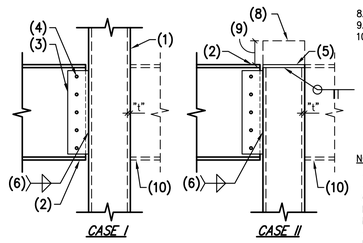

NOTES:
–DETAIL A MAY BE USED TYP. U.N.O.
–DETAIL B MAY BE USED AT CONTRACTOR'S OPTION WHERE HSS MIN. FLANGE THICKNESSES ARE MET PER SCHEDULE.
–WHERE COLUMNS ARE RECTANGULAR IN LIEU OF SQUARE, THE GREATER FLANGE LENGTH (I.E. WORST CASE) APPLIES PER SCHEDULE.
–CONTRACTOR MAY INCREASE PLAN COLUMN THICKNESS AT THEIR OPTION.

B SHEAR PLATE TO COLUMN

MINIMUM COLUMN FLANGE THICKNESS FOR DETAIL B	
HSS MEMBER	THICKNESS ("t")
4x4	1/4"
5x5	1/4"
6x6	1/4"
7x7	1/4"
8x8	5/16"
9x9	5/16"
10x10	3/8"
12x12	3/8"
14x14	1/2"
16x16	1/2"

NOTES:
1. MASONRY WALL.
2. CONTINUOUS GROUTED BOND BEAM PER G.S.N.
3. CONTINUOUS LEDGER ANGLE.
4. STEEL DECK – FOR DIRECTION, SEE PLAN.
5. 1/2"x8"x4" STEEL PLATE W/ 2– 1/2"ø H.S. AT 5" O.C.

202 LEDGER ANGLE AND STEEL DECK AT MASONRY WALL
NO SCALE

NOTES:
1. CONCRETE WALL.
2. CONT. L2x2x1/4" W/ 1/2"ø H.S. AT 18" O.C.
3. GRATING AND ATTACHMENT BY OTHERS.
4. 1/2"x8"x4" STEEL PLATE W/ 2– 3/4"ø H.S. AT 5" O.C.
5. HANDRAIL POST AND ATTACHMENT BY OTHERS. (4'–0" O.C. MAX).

211 EDGE OF GRATING AT CONCRETE WALL
NO SCALE

NOTES:
1. STEEL BEAM.
2. CONCRETE WALL.
3. 3/8" STEEL SHEAR TAB.
4. 2– 1"ø BOLTS.
5. 1/2"x6"x14" STEEL PLATE W/ 3– 3/4"ø H.S. AT 5" O.C.

208 STEEL BEAM AT CONCRETE WALL
NO SCALE

A SHEAR PLATE TO BACKER PLATE TO COLUMN

205 TYPICAL BEAM TO HSS STEEL COLUMN
NO SCALE

NOTES:
1. MASONRY WALL.
2. CONTINUOUS 8" DEEP GROUTED BOND BEAM.
3. SOLID GROUT 6" ALL AROUND ALL ANCHORS.
4. STEEL PLATE PER SCHEDULE BELOW.
5. STEEL BEAM.
6. 3/8" STEEL PLATE.
7. 1 1/2" SLOTTED HOLES.
8. FOR SIZE, TYPE, AND NUMBER OF BOLTS SEE TYPICAL BOLT SCHEDULE.

EMBED PLATE SCHEDULE	
W8,W10	A. 3/8"x4"x12" WITH 2– 3/4"ø H.S. AT 9" O.C.
W12,W14	B. 1/2"x8"x14" WITH 4– 3/4"ø H.S. AT 5"x11" O.C.
W16,W18	C. 5/8"x11"x19" WITH 6– 3/4"ø H.S. AT 8" O.C.
W21,W24	D. 3/4"x11"x27" WITH 8– 3/4"ø H.S. AT 8" O.C.

203 STEEL BEAM TO MASONRY WALL CONNECTION
NO SCALE

NO	BY	DATE	REVISIONS	DATE	APP.

Registered Professional Engineer (Civil) CERTIFICATE NO. 70374 JAMES APPLEYARD Date Signed 10/31/25 ARIZONA, U.S.A.

PREPARED BY: PKA
DESIGNED BY: JA
DRAWN BY: NS
CHECKED BY: JA
SCALE: AS NOTED
DATE: SEP 2025
JOB NO.: 23364

THESE DRAWINGS ARE THE PROPERTY OF P.A.C.E. AND SHALL NOT BE REPRODUCED IN ANY MANNER NOR BE USED FOR CONSTRUCTION UNLESS STAMPED "ISSUED FOR CONSTRUCTION".

TITLE: FRAMING DETAILS

JOB: TOWN OF JEROME WASTEWATER TREATMENT PLANT YAVAPAI AZ

ISSUED FOR BID

PREPARED BY:
PACE
Advanced Water Engineering
8723 E. Via de Ventura, Suite J | SCOTTSDALE, CA 85258
P: (480) 991-3995 | www.paceadvisor.com
TAYLOR B. PIERCE R.C.E 70097 DATE

SHEET
S4.1
65 OF 99 SHEETS

JOB NO. 23364

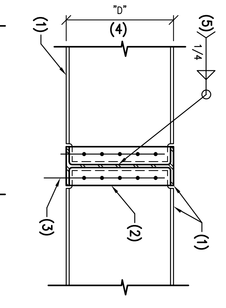

MOTES:

1. STEEL BEAM.
2. USE 3/8" STEEL SHEAR PLATE WHERE "D" = 27" OR GREATER.
3. FOR SIZE, TYPE & NUMBER OF BOLTS, SEE TYPICAL BOLT SCHEDULE. OF BEAM "D" = LESSER OF BEAM DEPTHS AS OCCURS.
4. WELD AS SHOWN ON TYPICAL WELD SCHEDULE. AT CONNECTION AT STIFFENER PLATES WHEN REQUIRED.
5.

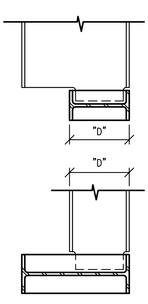

NOTE:
AT ONE SIDED CONNECTIONS, INSTALL 3/8" STIFFENER PLATE OPPOSITE SHEAR PLATE.

212 TYPICAL CONNECTION WIDE FLANGE BEAM TO BEAM

NO SCALE

PK ASSOCIATES, LLC
6900 E. Belleview Ave. #200
Greenwood Village, Colorado 80111
Phone: (720) 493-0000
Email: cadd@pkastructural.com
Website: www.pkastructural.com

ISSUED FOR BID

JOB NO. 23364

SHEET S4.2

66 OF 99 SHEETS

PREPARED BY:

PACE
Advanced Water Engineering
8723 E. VIA de COMMERICO, SUITE A-204 | SCOTTSDALE, CA 85258
P: (408) 991-3595 | www.pacewater.com

TAYLOR B. PIERCE R.C.E 70097 DATE

JOB

TOWN OF JEROME
WASTEWATER
TREATMENT PLANT

YAVAPAI AZ

TITLE

FRAMING DETAILS

PREPARED BY:	PKA
DESIGNED BY:	JA
DRAWN BY:	NS
CHECKED BY:	JA
SCALE	AS NOTED
DATE	SEP 2025
JOB NO.	23364

Registered Professional Engineer
CERTIFICATE NO. 70097
JAMES APPLEYARD
STATE OF ARIZONA
NATIONAL COUNCIL OF EXAMINERS FOR ENGINEERING AND SURVEYING (NCEES)

NO	BY	DATE	REVISIONS	DATE	APP.

THESE DRAWINGS ARE THE PROPERTY OF P.A.C.E. AND SHALL NOT BE REPRODUCED IN ANY MANNER NOR BE USED FOR CONSTRUCTION UNLESS STAMPED "ISSUED FOR CONSTRUCTION".

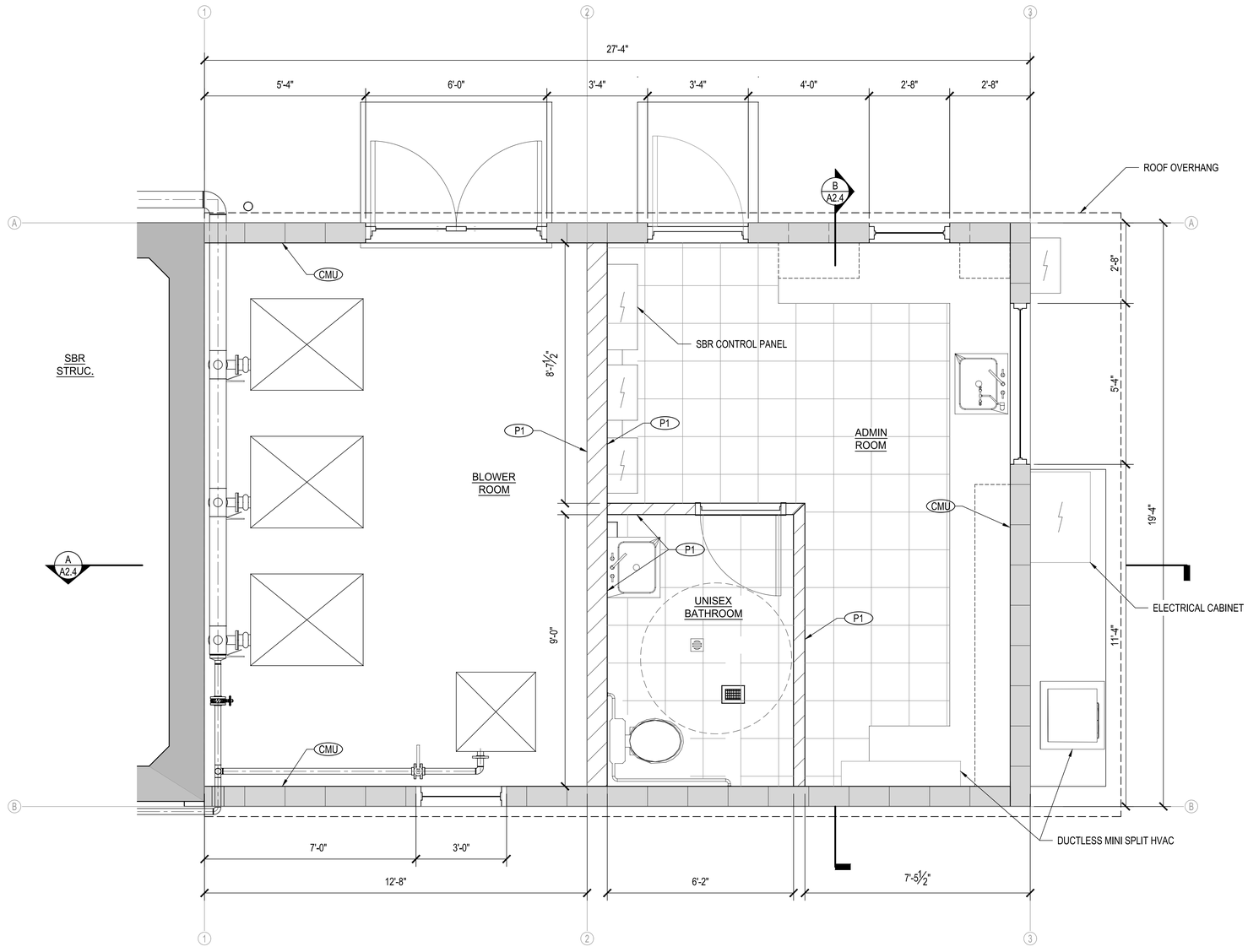

ARCH. PLAN
SCALE: 1/2" = 1'-0"

NORTH

GENERAL NOTES

1. ALL INTERIOR WALLS, EXTERIOR WALLS, AND CEILINGS SHALL BE INSULATED PER SPECIFICATION SECTION 07 2100 OF THE CONTRACT DOCUMENTS.

DOOR & WINDOW NOTES:

1. ALL EXITS SHALL OPEN FROM THE INSIDE WITHOUT THE USE OF A KEY AND/OR SPECIAL KNOWLEDGE (U.N.O.). MANUALLY OPERATED EDGE OR SURFACE MOUNTED FLUSH BOLTS AND SURFACE BOLTS ARE PROHIBITED.
2. PAINT STEEL DOORS AND FRAMES WITH ONE (1) COAT OF RUST INHIBITING PRIMER AND ONE (1) COAT OF SEMI-GLOSS ALKYD ENAMEL.
3. ALL INTERIOR DOORS TO BE SOLID CORE MASONITE DOOS IN "TIMELY" FRAMES (U.N.O.).
4. ALL DOOR HARDWARE TO BE AL SERIES "SCHLAGE" LEVER TYPE WITH FINISH PER OWNER'S DIRECTION. VERIFY KEYING WITH OWNER.
5. PROVIDE DOOR STOPS AS REQUIRED AT FLOOR AND/OR WALL.
6. ALL DOORS TO BE MASTER KEYED. VERIFY KEYING WITH OWNER.
7. ALL THRESHOLDS TO BE MAXIMUM HEIGHT OF 1/2".
8. DOOR LOCK AND LATCHES SHALL COMPLY WITH UBC SECTION 1004.3 AND ADA.
9. THE AUTHORITY HAVING JURISDICTION MAY INCREASE THE MAXIMUM EFFORT TO OPERATE FIRE DOORS IN ORDER TO ACHIEVE POSITIVE LATCHING, BUT NOT EXCEEDING THE 15 LP MAX.
10. MAXIMUM EFFORT TO OPERATE EXTERIOR DOORS IS 5 LBS.
11. HAND-ACTIVATED DOOR OPENING HARDWARE SHALL BE CENTERED BETWEEN 30" AND 44" A.F.F.
12. PROVIDE 1/4" TEMPERED GLASS AT ALL INTERIOR WINDOW LOCATIONS.
13. MAIN EXTERIOR DOORS: PROVIDE VISIBLE DURABLE SIGN ON THE EGRESS SIDE, ON OR ADJACENT TO THE DOOR, STATING: "THIS DOOR TO REMAIN UNLOCKED WHEN THE BUILDING IS OCCUPIED." THE SIGN SHALL BE IN LETTERS 1" HIGH ON A CONTRASTING BACKGROUND.

FLOOR PLAN NOTES:

1. ALL INSULATION SHALL HAVE FLAME SPREAD RATE NOT TO EXCEED 25 AND A SMOKE DENSITY NOT TO EXCEED 450 WHEN TESTED IN ACCORDANCE WITH STANDARD NO. 42-1.
2. PROVIDE 4'-0" HIGH ANGLE IRON DOOR GUARDS AT FLOOR OF EACH JAMB OF EACH OVERHEAD DOOR OPENING.
3. ALL NEW DRYWALL SHALL BE TAPED, TEXTURED, AND PAINTED WITH ONE (1) COAT VINYL ACRYLIC WALL SEALER AND TWO (2) COATS LO-GLO ACRYLIC SEMI-GLOSS ENAMEL. PROVIDE SAMPLE FOR OWNER'S APPROVAL. PROVIDE LIGHT KNOCKDOWN TEXTURE.
4. RESTROOM DRYWALL SHALL BE WATER RESISTANT TYPE X. RESTROOMS TO HAVE +4' HIGH 12"x12" GLAZED CERAMIC TILE BY "DAL TALE" OR EQUAL, FROM STANDARD COLOR SELECTION WAINSCOT. PAINT DRYWALL ABOVE WITH ONE (1) COAT PRIMER AND TWO (2) COATS SEMI-GLOSS ENAMEL PAINT. USE DUNN-EDWARDS OR FRAZEE.
5. BLOWER ROOM: PROVIDE SAWCUT CONTROL JOINTS AT 5'x5' MINIMUM FOR AREAS WITH SEALED CONCRETE FINISHED FLOOR. RESTROOM AND OPERATIONS ROOM TO RECEIVE 12"x12" VINYL COMPOSITE TILES. PROVIDE VCT AND CERAMIC TILE SAMPLES FOR OWNER'S SELECTION.
6. PROVIDE 4" CERAMIC TILE BASE TO MATCH FLOOR TILE. AT RESTROOM, PROVIDE 6" COVERED CERAMIC TILE BASE.
7. SEE PLUMBING DRAWING FOR FLOOR AREA DRAINAGE AND RESTROOM. PLUMBING DRAWINGS SHALL APPLY FOR APPLICABLE FIXTURES.

WALL FINISH LEGEND

P1 DUNN EDWARDS - FOSSIL

CMU CLEAR SEALER

INSTAL 4" HIGH RESILIENT BASE FOR ALL ROOMS.

FLOOR FINISH LEGEND

SEALED CONCRETE

12"X12" VINYL COMPOSITE TILES

NO	BY	DATE	REVISIONS	DATE	APP.

Registered Professional Engineer (Civil) CERTIFICATE NO. 70097 TAYLOR B. PIERCE Registered Professional Engineer ARIZONA, U.S.A. Expires 12/31/28

PREPARED BY: PACE
DESIGNED BY: NE
DRAWN BY: DS, WW
CHECKED BY: TP
SCALE: AS NOTED
DATE: NOV 2025
JOB NO. B614

THESE DRAWINGS ARE THE PROPERTY OF P.A.C.E. AND SHALL NOT BE REPRODUCED IN ANY MANNER NOR BE USED FOR CONSTRUCTION UNLESS STAMPED 'ISSUED FOR CONSTRUCTION'.

TITLE
BLOWER OPS ARCH PLAN

JOB
TOWN OF JEROME
WASTEWATER
TREATMENT PLANT
YAVAPAI CO. AZ

100% ISSUED FOR BID

PREPARED BY:
PACE
Advanced Water Engineering
8723 E. VIA DE VENTURA, SUITE A-200, SCOTTSDALE, CA 85258
P: (480) 991-3955 | www.pacewater.com
TAYLOR B. PIERCE R.C.E. 70097 DATE

SHEET
A1.0
67 OF 99 SHEETS

JOB NO. B614

W:\B614\Engineering\B614-30sheet\B614 - A2.0 BLOWER OPS ARCH PLAN.dwg - Tab: A1.0 - by reddington on 11/21/25 at 12:26:37 PM

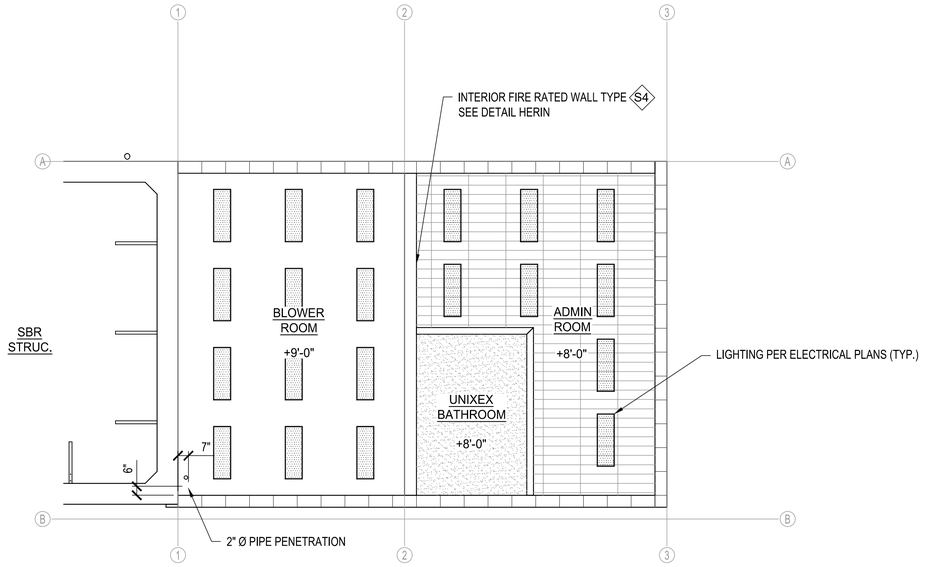

REFLECTED CEILING PLAN

SCALE: 1/4" = 1'-0"

CEILING NOTES:

1. T-BAR SUSPENSION SYSTEM TO BE PROVIDED BY ARMSTRONG OR EQUAL. SEE REFLECTED CEILING PLANS FOR LOCATIONS: 2'X4'X5/8" TILE AND CEILING HEIGHTS. CEILINGS TO BE LAID OUT CENTERED IN ROOMS IN BOTH DIRECTIONS AS SHOWN. HANG T-BAR SUSPENSION SYSTEM FROM ROOF JOISTS WITH DIAGONAL HANGERS TO PREVENT SAGGING. COLOR BY OWNER.
2. RESTROOM PER REFLECTED CEILING PLAN TO HAVE 5/8" DRYWALL CEILINGS. SUPPORT WITH 3-5/8"X22 GAUGE METAL STUDS AT 16" O.C. FOR SPANS 8' OR LESS. FOR SPANS OVER 8' USE 6"X22 GAUGE METAL STUDS AT 16".

CEILING FINISH LEGEND:

- 2'x4'x5/8" SUSPENDED T-BAR CEILING
- 5/8" DRYWALL CEILING
- EXPOSED CEILING
- 2' x 4' RECESSED FLORESCENT LIGHT FIXTURE

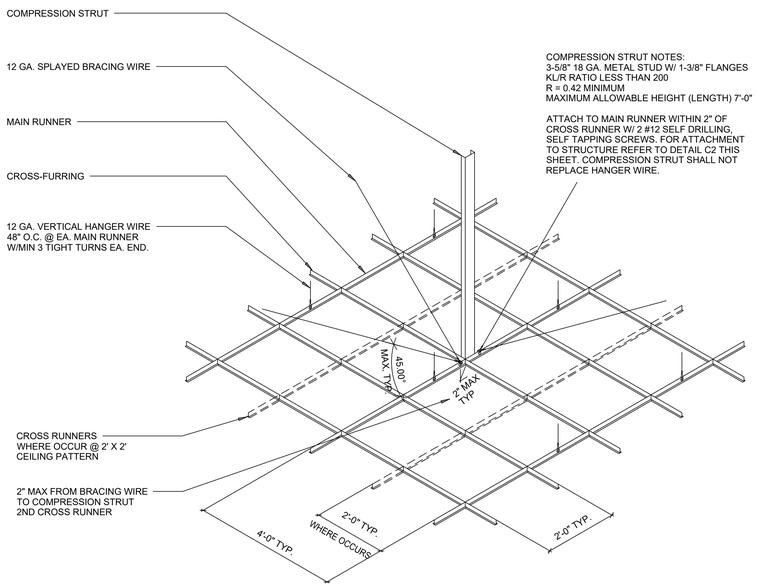

COMPRESSION STRUT NOTES:
3-5/8" 18 GA. METAL STUD W/ 1-3/8" FLANGES
KL/R RATIO LESS THAN 200
R = 0.42 MINIMUM
MAXIMUM ALLOWABLE HEIGHT (LENGTH) 7'-0"

ATTACH TO MAIN RUNNER WITHIN 2" OF CROSS RUNNER W/ 2 #12 SELF DRILLING, SELF TAPPING SCREWS. FOR ATTACHMENT TO STRUCTURE REFER TO DETAIL C2 THIS SHEET. COMPRESSION STRUT SHALL NOT REPLACE HANGER WIRE.

NOTE: PROVIDE SETS OF FOUR SPLAYED BRACING WIRES, ORIENTED 90 DEGREES FROM EACH OTHER, AND COMPRESSION STRUT AT A SPACING NOT MORE THAN 12'-0" x 12'-0" ON CENTER. PROVIDE 12 GAUGE MINIMUM SPLAYED BRACING WIRES FASTENED WITH NOT LESS THAN FOUR TIGHT TURNS IN 1-1/2 INCHES AT BOTH ENDS OF WIRE. SLOPE OF SPLAYED BRACING WIRES SHOULD NOT EXCEED 45 DEGREES FROM THE PLANE OF THE CEILING.

NOTE: PROVIDE HANGER WIRES AT A SPACING NOT MORE THAN 4'-0" X 4'-0" ON CENTER. PROVIDE 8 OR 12 GAUGE MINIMUM HANGER WIRE FASTENED WITH NOT LESS THAN THREE TIGHT TURNS IN 1-1/2 INCHES AT BOTH ENDS OF WIRE.

2'x4' SUSPENDED LAY-IN CEILING GRID

INTERIOR RATED WALL

NO	BY	DATE	REVISIONS	DATE	APP.

Registered Professional Engineer (Civil) CERTIFICATE NO. 47127 Timothy B. Pierce Signed 12/31/25 ARIZONA, U.S.A. Expires 12/31/28

PREPARED BY: PACE
DESIGNED BY: NE
DRAWN BY: DS, WW
CHECKED BY: TP
SCALE: AS NOTED
DATE: NOV 2025
JOB NO.: B614

THESE DRAWINGS ARE THE PROPERTY OF P.A.C.E. AND SHALL NOT BE REPRODUCED IN ANY MANNER NOR BE USED FOR CONSTRUCTION UNLESS STAMPED 'ISSUED FOR CONSTRUCTION'.

TITLE
BLOWER OPS ARCH REFLECTED CEILING PLAN

JOB
TOWN OF JEROME
WASTEWATER
TREATMENT PLANT
YAVAPAI CO. AZ

100% ISSUED FOR BID

PREPARED BY:
PACE
Advanced Water Engineering
8723 E. VIA DE VENTURA, SUITE 290 | SCOTTSDALE, CA 85258
P: (480) 991-3995 | www.pacewater.com
TAYLOR B. PIERCE R.C.E. 70097 DATE

SHEET
A2.0
68 OF 99 SHEETS

JOB NO. B614

W:\B614\Engineering\B614-30\sheets\B614 - A2.0 BLOWER OPS ARCH PLAN.dwg - Tab: A2.0 - by reddington on 11/21/25 at 12:26:57 PM

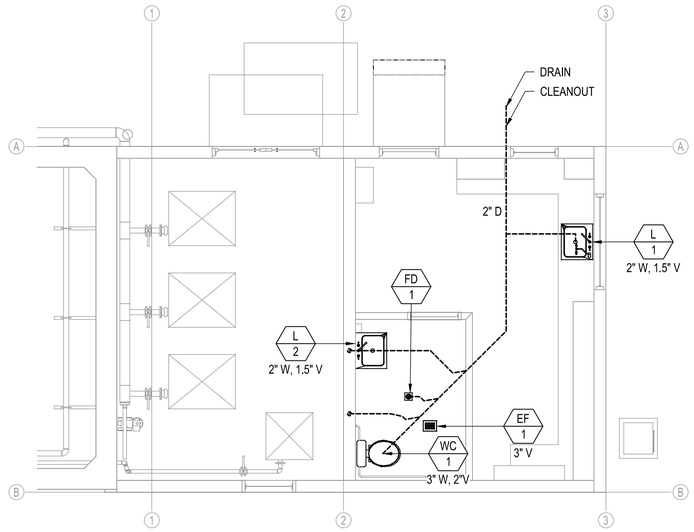

SEWER PLUMBING PLAN

SCALE: 1/4" = 1'-0"

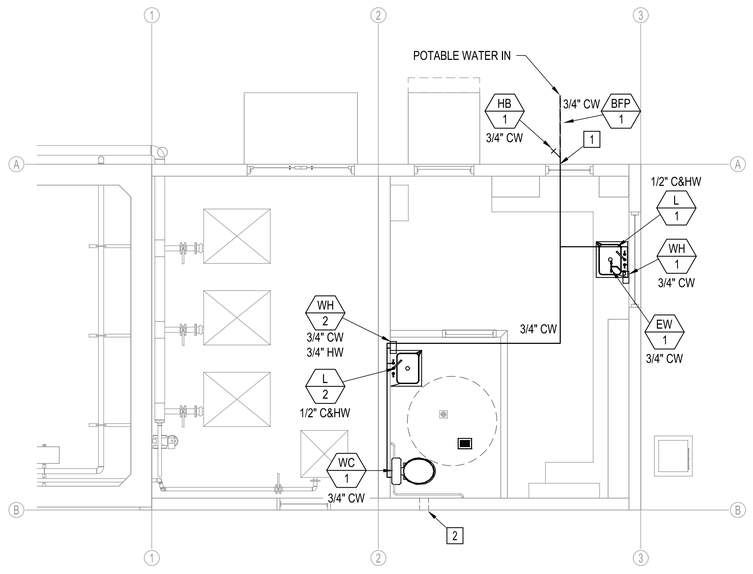

WATER PLUMBING PLAN

SCALE: 1/4" = 1'-0"

PLUMBING NOTES

1. ALL EQUIPMENT & FIXTURE COLD WATER AND HOT WATER CONNECTION SHALL BE INSTALLED W/ ISOLATION VALVE.
2. ALL PLUMBING AND HVAC LINES ARE SCHEMATIC. CONTRACTOR TO INSTALL PER BUILDING CODES.

CONSTRUCTION NOTES

1 INSTALL 2" REDUCED PRESSURE-TYPE BACKFLOW PREVENTER UNIT & ASSEMBLY COMPONENTS. BACKFLOW PREVENTER SHALL BE FEBCO, WATTS, WILKENS, OR APPROVED EQUAL.

2 INSTALL EXHAUST VENT DUCT, DISCHARGE TO WALL.

FIXTURE SCHEDULE

ITEM	FIXTURE	ROUGH-IN CONNECTIONS				DESCRIPTION
		COLD WATER	HOT WATER	WASTE	VENT	(ALL PLUMBING FIXTURES MUST BE APPROVED BY THE ENGINEER & OWNER PRIOR TO PURCHASING)
WC 1	WATER CLOSET (ADA)	1"	--	3"	2"	KOHLER OR AMERICAN STANDARD ADA HEIGHT ELONGATED WITH SLOAN AUTOMATIC FLUSH VALVE.
L 1	LAVATORY	1/2"	1/2"	2"	1-1/2"	ADA BARRIER FREE LAVATORY, COUNTER MOUNTED, WITH EXTRA HOLE FOR SOAP DISPENSER, METERED, SINGLE HANDLE SELF CLOSING FAUCET, LOOSE KEY STOPS WITH RIGID SUPPLIES, GRID DRAIN, P-TRAP.
L 2	SINK	1/2"	1/2"	2"	1-1/2"	ADA BARRIER FREE SINK, WALL MOUNTED, WITH EXTRA HOLE FOR SOAP DISPENSER, METERED, SINGLE HANDLE SELF CLOSING FAUCET, LOOSE KEY STOPS WITH RIGID SUPPLIES, GRID DRAIN, P-TRAP.
WH 1	WATER HEATER	3/4"	3/4"	--	--	RHEEM PERFORMANCE TANKLESS ELECTRIC WATER HEATER. 13 KW, 2.54 GPM
WH 2	WATER HEATER	3/4"	3/4"	--	--	RHEEM PERFORMANCE TANKLESS ELECTRIC WATER HEATER. 13 KW, 2.54 GPM
FD 1	FLOOR DRAIN	--	--	SEE PLAN FOR SIZE		ZURN NO. Z-415-NH-B-P, CAST IRON, COMPLETE WITH ROUND POLISHED NICKEL-BRONZE TOP, FLASHING COLLAR, AND P-TRAP.
HVAC 1	HVAC		--	--	--	1 TON, 12,000 BTU AIR CONDITIONER HEAT PUMP (COOLING/HEATING) SPLIT SYSTEM W/ THERMOSTAT, 16 SEER, 120V 1PH, 60 HZ. INDOOR AIR HANDLER TO BE HORIZONTALLY MOUNTED PER MFR REQUIREMENTS. AIR COMPRESSOR INSTALLED ON ROOF PER PLAN.
HB 1	HOSE BIBB	3/4"	--	--	--	HOSE BIBB MOUNTED 24" ABOVE FINISHED FLOOR.
EW 1	EYE WASH STATION	3/4"	--	--	--	EMERGENCY EYEWASH STATION, GUARDIAN G1000 FAUCET OR EQUAL.
EF 1	EF		--	--	4	100 CFM EXHAUST FAN W/ 100W LIGHT, BROAN MODEL 750 OR EQUAL.
BFP 1	BFP	--	--	--	--	3/4" BACK FLOW PREVENTER

NO	BY	DATE	REVISIONS	DATE	APP.

Registered Professional Engineer (Civil) CERTIFICATE NO. 70097 TAYLOR B. PIERCE Signed ARIZONA, U.S.A. Expires 12/31/28

PREPARED BY: PACE
DESIGNED BY: NE
DRAWN BY: DS, WW
CHECKED BY: TP
SCALE: AS NOTED
DATE: NOV 2025
JOB NO.: B614

TITLE: **BLOWER OPS ARCH SEWER & PLUMBING PLAN**

JOB: TOWN OF JEROME WASTEWATER TREATMENT PLANT — YAVAPAI CO. AZ

100% ISSUED FOR BID

PREPARED BY: TAYLOR B. PIERCE R.C.E 70097 DATE

PACE
Advanced Water Engineering
8723 E. Via de Commercio, Suite 1, Anaheim Hills, CA 92808
P: (480) 991-3995 | www.pacewater.com

SHEET **A3.0**
69 OF 99 SHEETS

JOB NO. B614

THESE DRAWINGS ARE THE PROPERTY OF P.A.C.E. AND SHALL NOT BE REPRODUCED IN ANY MANNER NOR BE USED FOR CONSTRUCTION UNLESS STAMPED 'ISSUED FOR CONSTRUCTION'.

W:\B614\Engineering\B614-30\sheets\B614 - A2.0 BLOWER OPS ARCH PLAN.dwg - Tab: A3.0 - by neddington on 11/21/25 at 12:26:57 PM

CONSTRUCTION NOTES:

1. INSTALL ALUMINUM WINDOW SYSTEM.
2. INSTALL HOLLOW METAL DOOR AND FRAME PER PLAN.

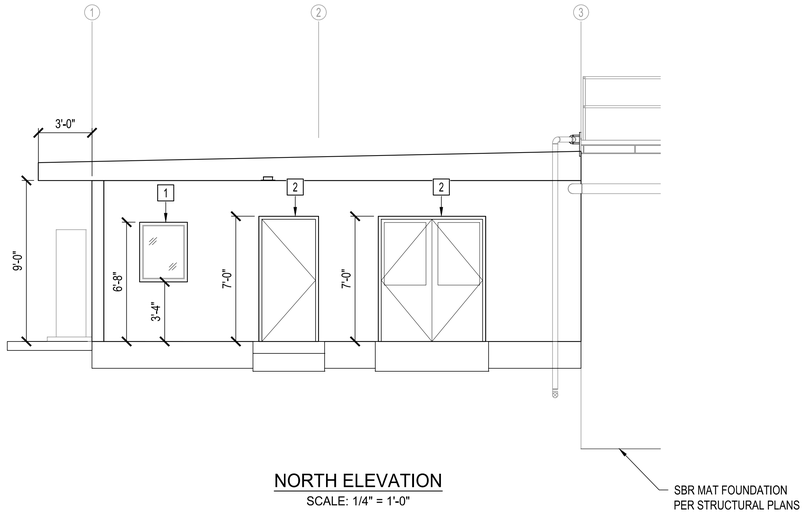

NORTH ELEVATION
SCALE: 1/4" = 1'-0"

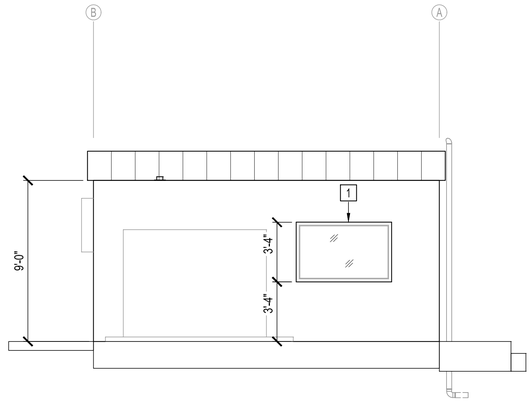

EAST ELEVATION
SCALE: 1/4" = 1'-0"

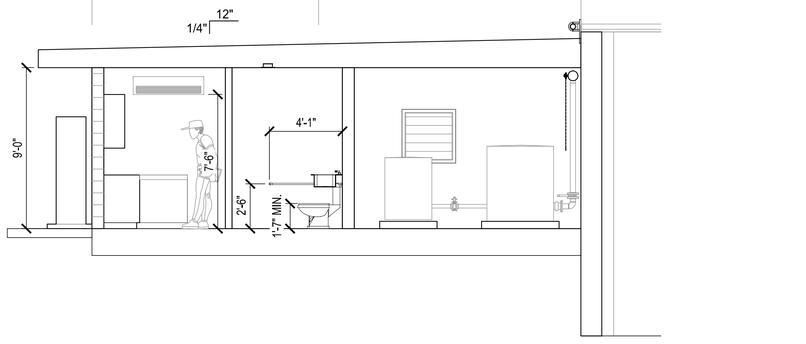

SECTION - A
SCALE: 1/4" = 1'-0"

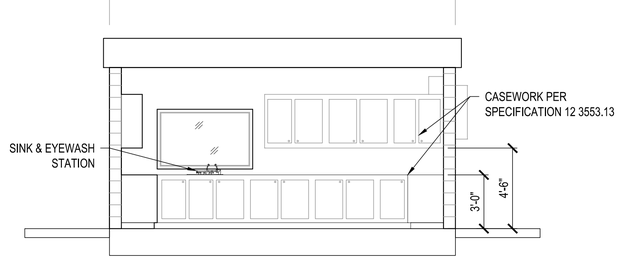

SECTION - B
SCALE: 1/4" = 1'-0"

THESE DRAWINGS ARE THE PROPERTY OF P.A.C.E. AND SHALL NOT BE REPRODUCED IN ANY MANNER NOR BE USED FOR CONSTRUCTION UNLESS STAMPED 'ISSUED FOR CONSTRUCTION'.

NO	BY	DATE	REVISIONS	DATE	APP.

Registered Professional Engineer (Civil) CERTIFICATE NO. 70097 TAYLOR B. PIERCE Signed STATE OF ARIZONA, U.S.A. Expires 12/31/28

PREPARED BY: PACE
DESIGNED BY: NE
DRAWN BY: DS, WW
CHECKED BY: TP
SCALE: AS NOTED
DATE: NOV 2025
JOB NO.: B614

TITLE: **BLOWER OPS ARCH ELEVATIONS & SECTIONS**

JOB: TOWN OF JEROME WASTEWATER TREATMENT PLANT — YAVAPAI CO. AZ

100% ISSUED FOR BID

PREPARED BY: TAYLOR B. PIERCE — R.C.E 70097 — DATE

PACE
Advanced Water Engineering
8723 E. VIA DE COMMERCIO, BLDG. 1, SUITE 1, SCOTTSDALE, AZ 85258
P.: (480) 991-3595 | www.pacewater.com

SHEET **A4.0**
70 OF 99 SHEETS

JOB NO. B614

W:\B614\Engineering\B614-30sheets\B614 - A2.3 BLOWER OPS ARCH SECTIONS.dwg - Tab: A4.0 - by reddington on 11/17/25 at 9:58:04 AM

TOWN OF JEROME WWTP
ELECTRICAL
JEROME, ARIZONA

GENERAL ELECTRICAL NOTES

1. ELECTRICAL WORK SHALL COMPLY WITH THE NATIONAL ELECTRIC CODE (2011), FEDERAL, STATE AND LOCAL JURISDICTION CODES.
2. ALL WORK SHALL BE DONE IN A NEAT, WORKMANLIKE, FINISHED AND SAFE MANNER, ACCORDING TO THE LATEST PUBLISHED NATIONAL ELECTRICAL CONTRACTORS ASSOCIATION STANDARDS OF INSTALLATION, UNDER COMPETENT SUPERVISION.
3. VISIT THE SITE PRIOR TO BIDDING TO BECOME FAMILIAR WITH EXISTING CONDITIONS AND ALL OTHER FACTORS WHICH MAY AFFECT THE EXECUTION OF THIS WORK. INCLUDE ALL RELATED COSTS IN THE INITIAL BID PROPOSAL.
4. CONTRACTOR IS RESPONSIBLE FOR VERIFYING LOCATIONS OF ALL EXISTING UTILITIES AND AVOIDING DAMAGE TO SAME. CONTRACTOR SHALL BE RESPONSIBLE FOR DAMAGE TO UTILITIES CAUSED AS A RESULT OF HIS WORK. CALL (602) 263–1100 FOR BLUE STAKES. IRRIGATION LINES LESS THAN 2" WILL NOT BE MARKED AND SHALL BE REPAIRED IN KIND BY THE CONTRACTOR.
5. PROPER PROTECTION OF THE CONSTRUCTION AREA FOR SAFETY SHALL BE THE RESPONSIBILITY OF THE CONTRACTOR. COVER ALL TRENCHES AT THE END OF EACH WORK DAY. BARRICADES SHALL BE INSTALLED AS DIRECTED BY THE EPCOR OR THE PROJECT INSPECTOR. THE SITE AND ALL WORK SHALL CONFORM TO OSHA REQUIREMENTS.
6. CONTRACTOR SHALL PAY FOR PERMITS AND INSPECTIONS AS MAY BE REQUIRED AND PROVIDE A CERTIFICATE OF INSPECTION TO THE EPCOR.
7. PROTECT ALL MATERIAL AND EQUIPMENT INSTALLED AGAINST DAMAGE BY OTHER TRADES, WEATHER CONDITIONS OR ANY OTHER CAUSES. EQUIPMENT FOUND DAMAGED OR IN OTHER THAN NEW CONDITION WILL BE REJECTED AS DEFECTIVE. ALL COMPONENTS SHALL BE FREE OF DUST, GRIT AND FOREIGN MATERIALS, AND LEFT AS NEW BEFORE FINAL ACCEPTANCE OF WORK.
8. LEAVE THE SITE CLEAN, REMOVE ALL DEBRIS, EMPTY CARTONS, TOOLS, CONDUIT, WIRE SCRAPS AND ALL MISCELLANEOUS SPARE EQUIPMENT AND MATERIALS USED IN THE WORK DURING CONSTRUCTION.
9. IT IS THE OBLIGATION OF THE CONTRACTOR TO ORGANIZE HIS WORK SO THAT A COMPLETE ELECTRICAL, INSTRUMENTATION, AND/OR CONTROL SYSTEM FOR THE FACILITY WILL BE PROVIDED AND SUPPORTED BY ACCURATE SHOP AND RECORD DRAWINGS, AND ALL O & M MANUALS.
10. ALL UNDERGROUND CONDUIT SHALL BE SCHEDULE 40 PVC, BURIED 24" MINIMUM BELOW FINISHED GRADE, UNLESS SPECIFICALLY NOTED OTHERWISE ON PLANS OR IN DETAILS.
11. PROVIDE EMT INDOOR AND GRS OUTDOOR FOR ABOVE GROUND CONDUIT. WHERE METALLIC CONDUITS COME IN CONTACT WITH DIRT, THEY SHALL BE HALF LAP WRAPPED WITH SCOTCH 50 TAPE TO 12" AFG. FITTINGS SHALL BE STEEL, THREADED TYPE WITH INSULATED THROATS. SECURELY ATTACH ALL SURFACE MOUNTED CONDUIT EVERY 10 FEET AND WITHIN 3 FEET OF EACH JUNCTION BOX, PER NEC ARTICLE 344.30. OUTDOOR FLEX CONDUIT SHALL BE LIQUID TITE UV RESISTANT (BLACK) FLEX CONDUIT.
12. UNDERGROUND VERTICAL AND HORIZONTAL 90 DEGREE BEND CONDUIT SHALL BE GRS HALF LAPPED WRAPPED WITH SCOTCHRAP 50 10–MIL TAPE TO 18" MIN ABOVE GRADE WITH A RADIUS OF NOT LESS THAN 18" (FACTORY BENDS ONLY SHALL BE USED)
13. UNDERGROUND CONDUITS SHALL BE A MINIMUM 1".
14. ALL FEEDERS AND BRANCH CIRCUIT WIRE SHALL BE COPPER TYPE XHHW (75 DEGREE C) FOR BELOW GRADE INSTALLATIONS (AND CONDUIT RISERS) AND THHN/THWN (75 DEGREE C) FOR ABOVE GRADE INSTALLATIONS. MINIMUM SIZE SHALL BE #12 AWG, UNLESS SPECIFICALLY NOTED OTHERWISE ON PLANS OR IN DETAILS. ALL WIRING SHALL BE IN CONDUIT.
15. A SEPARATE GREEN INSULATED EQUIPMENT GROUNDING CONDUCTOR (BOND) SHALL BE INSTALLED WITHIN EACH RACEWAY PER NEC CODE.
16. WHEN A PANEL IS SUPPLIED BY A FEEDER OR BRANCH CIRCUIT, ANY INSTALLED GROUNDED CONDUCTOR SHALL NOT BE CONNECTED TO THE EQUIPMENT GROUNDING CONDUCTOR (GEC) OR TO THE GROUNDING ELECTRODE(S) PER NEC ARTICLE 250.32(B).
17. BOND ALL ENCLOSURES PER NEC ARTICLE 250.96.
18. CONTRACTOR SHALL PLAN AND INSTALL WORK IN SUCH A MANNER AS TO CONFORM TO THE STRUCTURE, AVOID OBSTRUCTIONS, PRESERVE HEADROOM AND KEEP OPENINGS AND PASSAGEWAYS CLEAR.
19. CONTRACTOR SHALL PROVIDE ALL LABOR, MATERIAL, ETC. NECESSARY FOR A COMPLETE AND WORKABLE ELECTRICAL SYSTEM WHETHER OR NOT THESE ITEMS ARE SPECIFICALLY NOTED ON THESE DRAWINGS. INCIDENTAL ITEMS NOT INDICATED ON THE DRAWINGS, NOR MENTIONED IN SPECIFICATIONS THAT CAN BE LEGITIMATELY AND REASONABLY INFERRED TO BELONG TO THE WORK DESCRIBED OR BE NECESSARY IN GOOD PRACTICE TO PROVIDE A COMPLETE SYSTEM, SHALL BE FURNISHED AND INSTALLED AS THOUGH ITEMIZED HERE IN EVERY DETAIL.
20. CONTRACTOR IS RESPONSIBLE FOR AND SHALL PROVIDE ALL LABOR, MATERIAL, TRENCHING, CONDUIT, TRANSFORMER PAD AND OTHER REQUIRED EQUIPMENT PER UTILITY COMPANY PLANS AND SPECIFICATIONS NECESSARY FOR A COMPLETE UNDERGROUND CONDUIT SYSTEM FROM THE UTILITY POINT OF SERVICE TO THE UTILITY CO. TRANSFORMER AND FROM THE UTILITY CO. TRANSFORMER TO THE ELECTRICAL SERVICE ENTRANCE SECTION.
21. ALL TRENCHING, CONDUITS, ETC. SHALL BE ROUTED AND INSTALLED IN SUCH A MANNER THAT WILL NOT DAMAGE EXISTING FACILITIES. SHOULD DAMAGE OCCUR, IT WILL BE THE CONTRACTORS RESPONSIBILITY TO REPAIR DAMAGE TO THE SATISFACTION OF THE EPCOR OR INSPECTOR.
22. ALL CONDUIT RUNS SHOWN ON THIS PLAN ARE SCHEMATIC IN NATURE. THE CONTRACTOR SHALL MAKE SURE THAT ALL CONDUIT, ETC. FALLS WITHIN THE CONSTRUCTION AREA/RIGHT OF WAY. (THIS INCLUDES MAINTAINING ALL REQUIRED CLEARANCES.)
23. WHEN CROSSING PATHWAYS OR SIDEWALKS, CONTRACTOR SHALL BORE UNDER EXISTING CONCRETE WALKS AND SAWCUT ASPHALT WALKS. ASPHALT WALKS SHALL BE REPLACED IN KIND.
24. CONTRACTOR SHALL GUARANTEE WORK INSTALLED UNDER THE CONTRACT TO BE FREE FROM DEFECTIVE WORKMANSHIP AND MATERIALS, USUAL WEAR EXPECTED, AND SHOULD ANY SUCH DEFECTS DEVELOP WITHIN A PERIOD OF ONE YEAR ACCEPTANCE OF THE PROJECT BY THE EPCOR, THE CONTRACTOR SHALL REPAIR AND/OR REPLACE ANY DEFECTIVE ITEMS AND DAMAGE RESULTING FROM FAILURE OF THESE ITEMS, AT NO EXPENSE WHATSOEVER TO THE EPCOR.
25. CONTRACTOR SHALL IDENTIFY EQUIPMENT PANELS, DISCONNECTS, PANELS, INSTRUMENTS ETC. USING P&ID NOMENCLATURE WITH 3/32–INCH THICK LAMINATED PHENOLIC TYPE NAMEPLATES WITH 1/4–INCH MINIMUM HEIGHT LETTERS. NAMEPLATE TO BE BLACK MATTE FINISH SURFACE WITH WHITE LETTER ENGRAVING AND BE UV RESISTANT. ATTACH NAMEPLATE TO THE OUTSIDE PANEL FACE WITH TWO STAINLESS STEEL SELF–TAPPING SCREWS. NAMEPLATE SHALL READ THE EQUIPMENT NAME AND P&ID NOMENCLATURE. SEE NEC ARTICLE 230.70(B) FOR SERVICE EQUIPMENT.
26. ALL CIRCUITS SHALL BE LEGIBLY IDENTIFIED AT THE PANEL, JUNCTION BOXES AND AT ALL EQUIPMENT IN A PERMANENT MANNER (I.E. ETCHED PLATES, CONDUCTOR TAG, PERMANENT MARKER, ETC.). THE LABELING SHALL INCLUDE PANEL CIRCUIT NUMBER, "TO" AND "FROM" IDENTIFICATION, AND MARKED "SPARE" WHERE APPLICABLE.
27. CONTRACTOR SHALL TEST ELECTRICAL SYSTEM FOR SHORT CIRCUITS AND MEGGER TEST FEEDERS AND BRANCH CIRCUIT WIRING. CONTRACTOR SHALL INSURE LOW IMPEDANCE GROUND PATH SYSTEM. PROVIDE CERTIFIED TEST RESULTS FOR MEGGER TEST TO EPCOR UPON COMPLETION OF PROJECT.
28. CONTRACTOR SHALL PERFORM HIGH POTENTIAL (HIPOT) TESTING WHEN REQUIRED BY LOCAL JURISDICTION OR EPCOR.
29. CONTRACTOR SHALL PROVIDE A GROUND–FAULT COORDINATION STUDY AND PERFORM RECOMMENDED SETTINGS ON NEW OVERCURRENT PROTECTION DEVICES, PROVIDE LABELS ON EQUIPMENT INDICATING SETTINGS.
30. CONTRACTOR SHALL PROVIDE AN ARC–FLASH STUDY, PROVIDE ALL APPLICABLE LABELS ON NEW EQUIPMENT AFTER STUDY IS COMPLETED.
31. ALL CONDUIT AND J–BOXES SHOWN SHALL BE CONCEALED WHEN POSSIBLE. WHEN NOT POSSIBLE, CONDUIT AND J–BOXES MAY BE SURFACE MOUNTED WITH PERMISSION OF THE EPCOR OR EPCOR'S REPRESENTATIVE.
32. CONTRACTOR SHALL COORDINATE ALL EQUIPMENT CONNECTIONS WITH EQUIPMENT SUPPLIER PRIOR TO ROUGH–IN. PROVIDE ADDITIONAL FUSED DISCONNECT SWITCHES AND CONTROLS IF OVERCURRENT PROTECTION OR CONTROLS IS NOT INTEGRAL WITH UNITS.
33. ALL EQUIPMENT SHALL BE FUSE SIZED PER MANUFACTURES RECOMMENDATIONS AND U.L. APPROVAL.
34. ELECTRICAL DEVICES, DISCONNECT SWITCHES, ETC., SHALL BE SUPPORTED INDEPENDENT OF AND ISOLATED FROM EQUIPMENT VIBRATIONS.
35. FULL LOAD AMPS (FLA) SIZES, AS NOTED IN THESE DRAWINGS, ARE BASED ON SPECIFIED EQUIPMENT DATA. CONTRACTOR SHALL VERIFY NAMEPLATE FLA OF EQUIPMENT SUPPLIED AND COORDINATE ACCORDINGLY PER EQUIPMENT SUPPLIERS RECOMMENDATIONS.
36. ALL OUTDOOR ELECTRICAL EQUIPMENT SHALL BE NEMA–3R OR NEMA–4 ENCLOSURES.
37. CONDUITS OR RACEWAYS ROUTED FROM INDOORS TO OUTDOORS OR AS DESCRIBED IN NEC 300.7(A), SHALL BE SEALED WITH A PLIABLE SEALING COMPOUND AT A CONDUIT BODY OR AT A JUNCTION BOX BEFORE THE CONDUIT ENTERS THE COLDER ENVIRONMENT.
38. CONDUITS OR RACEWAYS INSTALLED IN AREAS WHERE ELEVATION CHANGES MAY CAUSE WATER OR MOISTURE TO ENTER THE ELECTRICAL EQUIPMENT THROUGH THE CONDUIT SHALL BE SEALED WITH A HERMETIC CONDUIT SEAL AT BOTH ENDS OF THE CONDUIT OR RACEWAY.
39. MATERIALS SHALL BE NEW AND OF THE BEST QUALITY WITH MANUFACTURER'S NAME PRINTED THEREON. MATERIALS SHALL BE MANUFACTURED IN ACCORDANCE WITH NEMA, ANSI, UNDERWRITER'S LABORATORY OR OTHER APPLICABLE STANDARDS AND RATED FOR HEAVY DUTY SERVICE.
40. ALL WIRING DEVICES SHALL BE SPECIFICATION GRADE. ALL 15 AND 20 AMP, 125 AND 250 VOLT, NONLOCKING RECEPTACLES INSTALLED OUTDOORS SHALL BE LISTED WEATHER–RESISTANT TYPE. ALL WEATHERPROOF WHILE IN–USE RECEPTACLE COVERS SHALL BE METAL.
41. SELECTION OF MATERIALS SHALL BE IN STRICT ACCORDANCE WITH THE DRAWINGS AND/OR SPECIFICATIONS. THE USE OF MANUFACTURER'S NAME, MODEL, AND NUMBER IS INTENDED TO ESTABLISH STYLE, QUALITY, APPEARANCE, USEFULNESS AND BID PRICE. CONTRACTOR SHALL SUBMIT TO THE EPCOR OR EPCOR'S REPRESENTATIVE FOR REVIEW AND APPROVAL (PRIOR TO ORDERING MATERIALS) COPIES OF EQUIPMENT SHOP DRAWINGS AS FOLLOWS: 1) LIGHT FIXTURES, 2) PUMP CONTROL PANEL 3) RTU/PLC 4) SERVICE ENTRANCE SECTION, 5) ELECTRICAL EQUIPMENT, 6) DISCONNECT SWITCHES, 7) TIME CLOCKS AND OTHER CONTROLS, 8) LIGHTING CONTACTORS AND 9) PULL BOXES. AT THE TIME OF EACH SUBMITTAL, THE CONTRACTOR SHALL DEFINE AND DELINEATE IN WRITING ANY DEVIATIONS FROM THE CONTRACT DOCUMENTS. THE REVIEW WILL BE ONLY FOR CONFORMANCE WITH THE DESIGN CONCEPT OF THE WORK AND FOR COMPLIANCE WITH THE INFORMATION CONTAINED IN THE CONTRACT DOCUMENTS. THE REVIEW OF A SPECIFIED ITEM, AS SUCH, WILL NOT INDICATE REVIEW OF THE ASSEMBLY IN WHICH THE ITEM FUNCTIONS. REVIEW BY THE EPCOR OR EPCOR'S REPRESENTATIVE WILL NOT RELIEVE THE CONTRACTOR FROM RESPONSIBILITY FOR ANY ERRORS OR OMISSIONS IN THE SUBMITTALS NOR FROM HIS RESPONSIBILITY FOR COMPLYING WITH THE CONTRACT DOCUMENTS.
42. THE SUBMITTALS SHALL BE NEATLY GROUPED AND ORGANIZED. PERTINENT INFORMATION SHALL BE HIGHLIGHTED, AND THE SPECIFIC PRODUCT SHALL BE IDENTIFIED. ALL SUBMITTALS SHALL BE COMPLETE, AND PRESENTED IN ONE PACKAGE. THE SUBMITTAL SHALL INCLUDE A COMPLETE LIST OF THE EQUIPMENT AND MATERIALS, INCLUDING THE MANUFACTURER'S NAME, PRODUCT SPECIFICATION, DESCRIPTIVE DATA, TECHNICAL LITERATURE, PERFORMANCE CHARTS, CATALOG CUTS, INSTALLATION INSTRUCTIONS, AND SPARE PART RECOMMENDATIONS FOR EACH DIFFERENT ITEM OF THE EQUIPMENT SPECIFIED.
43. ELECTRICAL CONTRACTOR SHALL HAVE A MINIMUM OF 5 YEARS EXPERIENCE WORKING IN THE WATER/WASTEWATER INDUSTRY AND PROVIDE REFERENCES.

ENGINEER OF RECORD

PACE ADVANCED WATER ENGINEERING
8723 E. VIA DE COMMERCIO, #A–204
SCOTTSDALE, AZ 85258
PHONE: (480) 991–3595
CONTACT: TAYLOR PIERCE
CONTACT: TPIERCE@PACEWATER.COM

ELECTRICAL ENGINEER

WRIGHT ENGINEERING CORPORATION
165 EAST CHILTON DRIVE
CHANDLER, AZ 85225
PHONE: (480) 497–5829
CONTACT: JACOB BIELEFELDT
EMAIL: JBIELEFELDT@WRIGHTENGINEERING.US

PROJECT ADDRESS

TOWN OF JEROME WASTEWATER TREATMENT PLANT
SEWER PLANT ROAD
JEROME, AZ 86331

PRINCIPAL OWNER

TOWN OF JEROME
600 CLARK STREET, P.O. BOX 335
JEROME, AZ 86331

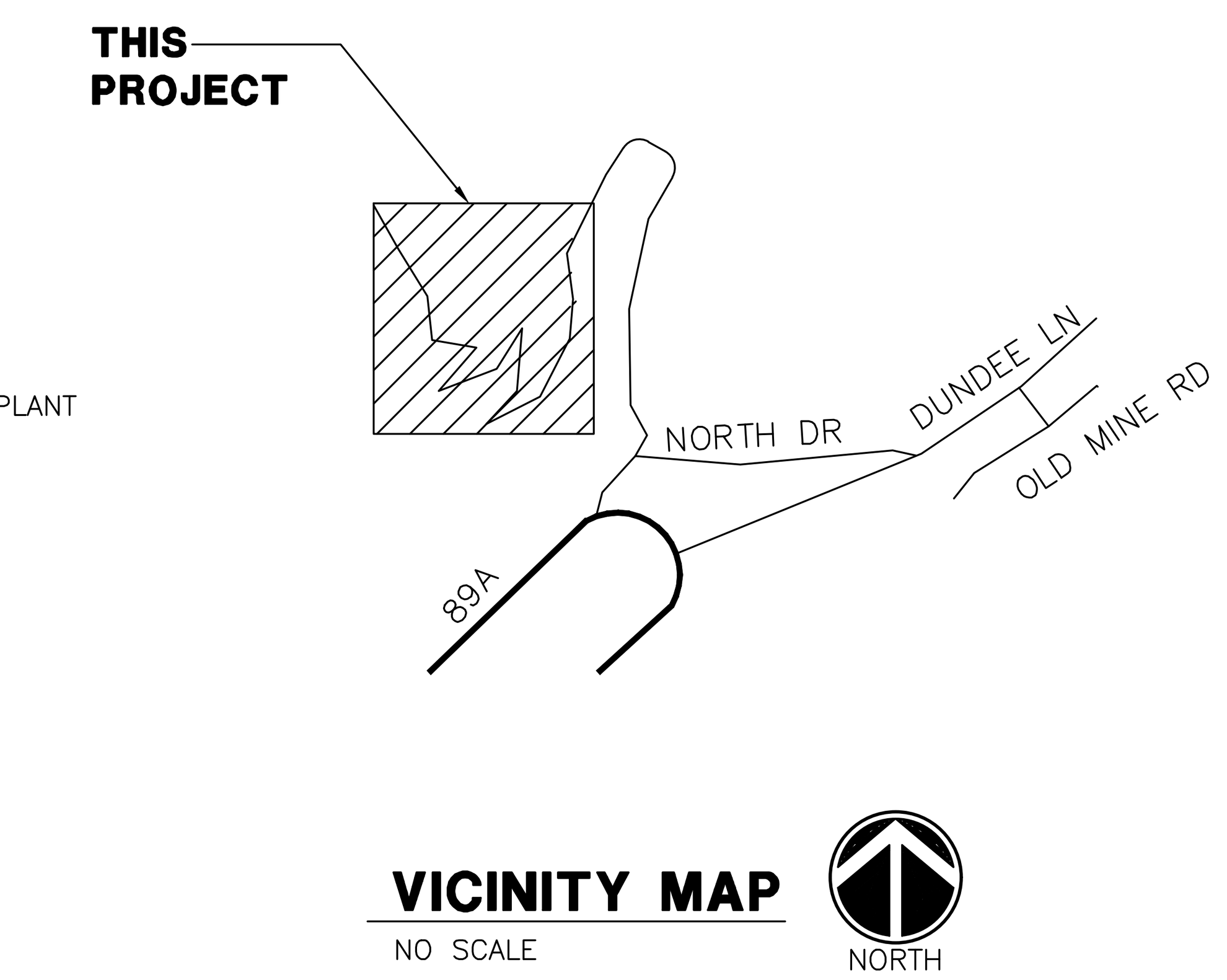

VICINITY MAP
NO SCALE

SHEET INDEX

SHEET E1.1 ELECTRICAL COVER SHEET
SHEET E1.2 ELECTRICAL NOTES + LEGEND
SHEET E2.1 ELECTRICAL SINGLE LINE DIAGRAM I
SHEET E2.2 ELECTRICAL SINGLE LINE DIAGRAM II
SHEET E2.3 ELECTRICAL LOAD CALCULATIONS
SHEET E2.4 ELECTRICAL CONDUIT + WIRE TABLES I
SHEET E2.5 ELECTRICAL CONDUIT + WIRE TABLES II
SHEET E3.1 ELECTRICAL PROPOSED SITE PLAN
SHEET E3.2 ELECTRICAL SBR PLAN
SHEET E3.3 ELECTRICAL DEWATERING PAD
SHEET E3.4 ELECTRICAL BLOWER OPS
SHEET E3.5 ELECTRICAL DRYING BED LIFT STATION
SHEET E3.6 ELECTRICAL OVERFLOW BASIN
SHEET E4.1 ELECTRICAL DETAILS I
SHEET E4.2 ELECTRICAL DETAILS II
SHEET E4.3 ELECTRICAL DETAILS III
SHEET E4.4 ELECTRICAL DETAILS IV
SHEET E4.5 ELECTRICAL DETAILS V
SHEET E4.6 ELECTRICAL DETAILS VI
SHEET E5.1 ELECTRICAL SCHEMATICS I
SHEET E5.2 ELECTRICAL SCHEMATICS II
SHEET E5.3 ELECTRICAL SCHEMATICS III

LIGHT FIXTURE SCHEDULE

SYMBOL	LETTER ID	MANUFACTURER	CATALOG NUMBER	FINISH COLOR	VOLTS	LAMP	LUMENS (MIN)	CCT	MOUNTING HEIGHT	TYPE	DETAIL
	A	LITHONIA LIGHTING	DSX1–LED–P2–30K–80CRI–T5W–MVOLT–PER –SPD20KV–DF–HA–CCE–DBLXD WITH PHOTOCELL, CONTRACTOR SHALL INSTALL IN LINE WITH LIGHT SWITCH TO OVERRIDE.	BLACK	240	68W LED	9,940	3000K	15'–0"	AREA LIGHT	POLE MOUNTED, SEE DETAIL D SHEET SE4.1
	B	LITHONIA LIGHTING	2VTL2–48L–ADP–LP940–BDP	WHITE	120	38.3W LED	4,116	4000K	*	BUILDING CEILING TROFFER 2X2	*CEILING MOUNTED, COORDINATE SURFACE TYPE BY OTHERS.
	C	LITHONIA LIGHTING	WDGE2 LED–P4 30K–80CRI–TFTM–MVOLT–PE–CCE–PIR–DBLXD– (2 OVER DOOR SHALL HAVE BATTERY BACK UP E10WH), CONTRACTOR SHALL INSTALL IN LINE WITH LIGHT SWITCH TO OVERRIDE.	BLACK	120	47W LED	4,002	3000K	*	BUILDING WALLPACK LIGHT	*WALL MOUNTED, 1 FOOT ABOVE DOOR
	D	LITHONIA LIGHTING	FEX–L24–9000LM–FGFL–WD–MVOLT–30K–90CRI–SPD10KV–IP67–DNAXD CR	BLACK	120	62.5W LED	6,424	3000K	*	CANOPY LIGHT	*CEILING
	E	LITHONIA LIGHTING	AFF–OEL–DWHGXD–UVOLT–LTP–SDRT–FCT–	BLACK	120	2.5W LED	N/A	N/A	*	EMERGENCY EXIT LIGHT	*WALL MOUNTED ABOVE DOOR.
	F	WAC LIGHTING	WS–180137–30K–90–2130	MATCH WATER FAUCET FIXTURE FINISH	120	28W LED	2,130	3000K	*	BUILDING RESTROOM LIGHT	*WALL MOUNTED ABOVE MIRROR.
	G	HOLOPHANE	HPFS–P3–55PG–MVOLT–30K–YMS–20KV–CNP123FT–UBV–DBLXD	BLACK	240	83W LED	12,627	3000K	*	SBR CATWALK FLOODLIGHT, CLASS 1 DIVISION 2	*SEE DETAIL.

NOTE: CONTRACTOR SHALL VERIFY ARCHITECTURE ELEMENTS FOR MOUNTING AND INSTALLATION PRIOR TO ORDERING. CONTRACTOR MAY SUBMIT ALTERNATIVES FOR ENGINEER APPROVED EQUAL.

WRIGHT engineering corporation
ELECTRICAL ENGINEERING AND DESIGN
165 EAST CHILTON DRIVE
CHANDLER, ARIZONA 85225
PHONE: 480.497.5829
FAX: 480.497.5807
www.wrightengineering.us
Wright Project # 23319

CALL TWO WORKING DAYS BEFORE YOU DIG
602-263-1100
1-800-STAKE-IT
(OUTSIDE MARICOPA COUNTY)

ISSUED FOR BID

NO	BY	DATE	REVISIONS	DATE	APP.

Registered Professional Engineer (Electrical), Certificate No. 73954, JACOB BIELEFELDT, Date Signed: 11-24-2025, Expires 9-30-27

PREPARED BY: WRIGHT ENGINEERING
DESIGNED BY: JHB
DRAWN BY: XAG
CHECKED BY: JHB SCALE: AS NOTED
DATE NOV 2025
JOB NO. B614

TITLE: ELECTRICAL COVER SHEET

JOB: TOWN OF JEROME WASTEWATER TREATMENT PLANT
YAVAPAI CO. AZ

PREPARED BY: PACE Advanced Water Engineering
8723 E. VIA de COMMERICO, SUITE A-204 | SCOTTSDALE, CA 85258
P: (408) 991-3595 | www.pacewater.com

SHEET E1.1
71 OF 99 SHEETS
JOB NO. B614

THESE DRAWINGS ARE THE PROPERTY OF P.A.C.E. AND SHALL NOT BE REPRODUCED IN ANY MANNER NOR BE USED FOR CONSTRUCTION UNLESS STAMPED "ISSUED FOR CONSTRUCTION".

H:\2023\23319-Jerome WWTP\23319-E.dwg - Tab: E1.1 - by jacobb on 11/24/25 at 6:56:46 PM

ELECTRICAL SYMBOLS

SINGLE LINE DIAGRAMS

- AMMETER
- VOLTMETER
- METER
- KILOWATT HOUR METER
- AMMETER SWITCH
- VOLTMETER SWITCH
- GROUND FAULT PROTECTION (GFP)
- POWER TRANSFORMER SEE NOTE 1.
- A-24 CIRCUIT BREAKER, 3 POLE UNLESS OTHERWISE INDICATED
- DISCONNECT SWITCH, 3 POLE UNLESS OTHERWISE INDICATED
- OIL FUSE CUTOUTS
- FUSE SEE NOTE 3.
- TRANSFER SWITCH, AUTOMATIC
- RV SIZE 1 — MAGNETIC MOTOR STARTER."1" INDICATES SIZE 1. RV INDICATES REDUCED VOLTAGE. 2S INDICATES 2 SPEED. R INDICATES REVERSING.
- MAGNETIC CONTACTOR
- (12) CONDUIT NUMBER 12. SEE CONDUIT AND WIRING SCHEDULE FOR SIZES AND QUANTITIES OF CONDUIT AND WIRES.
- GND — GROUND
- K — KIRK KEY INTERLOCKING OF EQUIPMENT
- 2 HP — EQUIPMENT FURNISHED, INSTALLED AND CONNECTED UNDER ANOTHER SECTION OF THE CONTRACT.
- PFR — PHASE FAILURE RELAY
- SA — SURGE ARRESTER
- EXISTING MOTOR (HP SHOWN)
- NEW MOTOR (ESTIMATED HP SHOWN)
- FUTURE MOTOR (ESTIMATED HP SHOWN)
- MANHOLE
- EYS SEAL

NOTES: (ELECTRICAL SYMBOLS)

1. POWER TRANSFORMERS SHALL BE DRY TYPE 480-208Y/120 VOLTS, 3 PHASE 4 WIRE UNLESS OTHERWISE INDICATED.
2. CONTROL TRANSFORMER SHALL BE DRY TYPE 480-120 VOLTS 1 PHASE UNLESS OTHERWISE INDICATED. SEE CONTROL WIRING DIAGRAMS FOR USE OF 120 VOLT CONTROL CIRCUITS CONTROL TRANSFORMERS SHALL BE SIZED TO HANDLE THE LOADS OF ALL RELAYS, PILOT LIGHTS, ETC. CONNECTED THERE TO PLUS 50 VA EXTRA CAPAOWNER.
3. LOCATED IN OR ON MOTOR CONTROL CENTER UNLESS OTHERWISE INDICATED.

CONTROL WIRING DIAGRAMS

NORMALLY OPEN / NORMALLY CLOSED / DEVICE

- CONTACT
- LIMIT SWITCH
- LIMIT SWITCH HELD CLOSED
- LIMIT SWITCH HELD OPEN
- PRESSURE OR VACUUM SWITCH
- LIQUID LEVEL SWITCH
- TEMPERATURE ACTUATED SWITCH
- FLOW SWITCH (AIR, WATER, ETC.)
- PUSH BUTTON SINGLE CIRCUIT MOMENTARY CONTACT. SEE NOTE 3.
- PUSH BUTTON SINGLE CIRCUIT LOCK-OUT(LOCATED AT MOTOR UNLESS OTHERWISE NOTED)
- TIMED CONTACT- CONTACT ACTION RELAY ON ENERGIZATION.
- TIMED CONTACT- CONTACT ACTION RELAY ON DE-ENERGIZATION.
- ON-OFF SWITCH. SEE NOTE 3.
- ESB — EMERGENCY STOP PUSH BUTTON (MAINTAINED CONTACT)
- STOP START — STOP -START PUSH-BUTTON STATION (MAINTAINED CONTACTS). SEE NOTE 3.
- H O A — HAND-OFF-AUTO SELECTOR SWITCH SEE NOTE 3. (THREE POSITION).
- TWO POSITION SELECTOR SWITCH SEE NOTE 3.
- PILOT LIGHT, Y=YELLOW, R=RED, A=AMBER, SEE NOTE 3. B=BLUE, W=WHITE, G=GREEN.
- BELL
- HORN OR SIREN
- CR — CONTROL RELAY SEE NOTE 3.
- M — STARTER COIL. SEE NOTE 3.
- TDR — TIME DELAY RELAY. (0-30 SECONDS UNLESS OTHERWISE NOTED). SEE NOTE 3.
- OL'S — MOTOR STARTER OVERLOAD RELAY CONTACTS
- CONTROL TRANSFORMER. SEE NOTES 2
- MANUAL MOTOR STARTER
- SOLENOID OPERATED CONTROL VALVE
- 120 VOLT, 1 PHASE, MOTOR (UNLESS OTHERWISE NOTED)
- RTM — RUNNING TIME METER. SEE NOTE 3. (ELAPSED TIME METER)
- SPACE HEATERS. (LOCATED AT MOTOR UNLESS OTHERWISE NOTED).
- TERMINALS IN MOTOR CONTROL CENTER/MCP; CONTACT OR DEVICE REMOTE FROM MOTOR CONTROL CENTER/MCP
- TERMINALS IN MOTOR CONTROL CENTER/MCP; CONTACT IN MOTOR CONTROL CENTER FOR CONNECTION TO REMOTE DEVICE/MCP
- DEVICE SIGNAL OUTPUT
- DEVICE SIGNAL INPUT

PLANS

- CONDUIT RUN CONCEALED UNDER SLAB OR BELOW GRADE. (CONCEALED IN SLAB WHERE SO NOTED OR WHERE ALLOWED PER SPECIFICATIONS).
- CONDUIT RUN EXPOSED UNLESS OTHERWISE NOTED
- EXISTING CONDUIT RUN
- HASH MARKS INDICATE QUANTITY OF #12 WIRES IN CONDUIT (PLUS 1#12 GROUND WIRE) EXCEPT NO HASH MARKS=3/4", 2#12 (PLUS 1#12 GROUND WIRE) UNLESS OTHERWISE NOTED.
  - 3/4", 3#12 — 1", 6#12
  - 3/4", 4#12 — 1", 7#12
  - 3/4", 5#12 — 1", 8#12
- L(1,3) HOMERUN TO PANEL L, CIRCUITS 1 AND 3
- GROUND WIRE
- CONDUIT UP (OUT TOP OF EQUIPMENT)
- CONDUIT DOWN (OUT BOTTOM OF EQUIPMENT)
- CONDUIT STUBBED OUT AND CAPPED
- LIGHTING FIXTURE MOUNTED ON POLE OR POST OR ABOVE PLATFORM
- CEILING MOUNTED LIGHTING FIXTURE
- BRACKET MOUNTED LIGHTING FIXTURE
- FLOODLIGHT
- FLUORESCENT LIGHTING FIXTURE
- POLE MOUNTED LIGHT FIXTURE
- EXIT LIGHT
- RECESSED LIGHTING FIXTURE
- LIGHTING FIXTURES CONNECTED TO EMERGENCY CIRCUITS
- A 1/100 — LIGHTING FIXTURE TYPE A, 100 WATTS, WITH 1 LAMP. SEE LIGHTING FIXTURE SCHEDULE
- \$ SINGLE POLE, SINGLE THROW TOGGLE SWITCH
- $\$_2$ DOUBLE POLE, SINGLE THROW TOGGLE SWITCH
- $\$_3$ THREE-WAY TOGGLE SWITCH
- $\$_4$ FOUR-WAY TOGGLE SWITCH
- $\$_M$ MANUAL MOTOR STARTER
  (switches above: AT +48" OR AS NOTED)
- $\$_a$ OUTLETS SHOWN WITH SUBSCRIPT "a" ADJACENT TO THEM SHALL BE CONTROLLED BY S a
- DUPLEX CONVENIENCE RECEPTACLE AT +12" OR AS NOTED
- SINGLE CONVENIENCE RECEPTACLE AT +12" OR AS NOTED
- SPECIAL PURPOSE RECEPTACLE AT +12" OR AS NOTED, RATING AS INDICATED
- JUNCTION BOX, SIZE AS REQUIRED BY CODE
- THERMOSTAT OUTLET AT +54"
- CLOCK OUTLET AT +7'-6" OR AS NOTED
- TELEPHONE OUTLET AT +12" OR AS NOTED
- TELEPHONE FLOOR OUTLET
- HORN
- P — CONTROL DEVICE
  - P = PRESSURE SWITCH
  - ZS = LIMIT SWITCH
  - L = LEVEL SWITCH
  - V = CONTROL VALVE
- CONTROL STATION: PUSH-BUTTON STATION OR SELECTOR SWITCH. SEE CONTROL WIRING DIAGRAMS FOR REQUIREMENTS.
- M — EXISTING MOTOR
- M — NEW MOTOR
- M — FUTURE MOTOR
- GROUND WELL
- GROUND ROD
- DISCONNECT SWITCH. SEE SINGLE LINE DIAGRAM FOR SIZE.
- LIGHTING PANEL. SURFACE MOUNTED.
- SWITCHBOARD, DISTRIBUTION PANEL OR MOTOR CONTROL CENTER
- (12) CONDUIT NUMBER 12. SEE CONDUIT AND WIRING SCHEDULE FOR SIZES AND QUANTITIES OF CONDUIT AND WIRES.
- +12" INDICATES HEIGHT FROM FINISHED FLOOR OR GRADE TO CENTERLINE OF DEVICE.
- (1) INDICATES TO REFER TO NOTE (1) ON DRAWING
- W.P. WEATHERPROOF. PROVIDE GASKETS AS REQUIRED
- C.O. CONDUIT ONLY
- FE-184 INSTRUMENTATION DEVICE. SEE PROCESS AND INSTRUMENTATION DRAWINGS FOR DESCRIPTIONS.
- PULL BOX (SIZE AS REQUIRED)
- OUTPUT TERMINAL
- INPUT TERMINAL

CONSTRUCTION NOTES

(1) REMOVE ALL EXISTING CUSTOMER OWNED OVERHEAD ELECTRICAL AND POWER POLE AND DISPOSE OF PROPERLY. COORDINATE WITH OWNER FOR SCHEDULING.

(2) REMOVE EXISTING SES AND PANEL AND DISPOSE OF PROPERLY. COORDINATE DISCONNECTION OF THE METER AND SECONDARY CONDUCTORS WITH APS

(3) DE-ENERGIZE EXISTING LAB BUILDING UPON COMPLETION OF CONSTRUCTION OF THE NEW LAB. REMOVE ALL EXISTING CONDUCTORS AND ELECTRICAL EQUIPMENT AND DISPOSE OF PROPERLY. COORDINATE ALL WORK WITH OWNER AND POWER COMPANY PRIOR TO DE-ENERGIZATION.

(4) COORDINATE WITH APS TO REPLACE THE EXISTING POLE MOUNTED SINGLE PHASE TRANSFORMER. APS TO INSTALL THREE PHASE TRANSFORMERS. CONTRACTOR SHALL VERIFY LOCATION OF NEW TRANSFORMER WITH APS. APS PLANS WILL DETERMINE EXACT LOCATION AND TAKE PRECEDENCE OVER THESE DRAWINGS. COORDINATE ALL WORK WITH APS.

(5) APS SERVICE LINE. TRENCH AND INSTALL CONDUIT PER APS SPECIFICATIONS. POWER COMPANY PLANS WILL DETERMINE EXACT LOCATION OF CONDUIT AND TAKE PRECEDENCE OVER THESE DRAWINGS.

(6) SES, 400 AMP, 277/480V, 3Ø, 4W, SEE DETAIL 1 ON E4.1.

(7) MINI-POWER ZONE AND PANELBOARD. SEE DETAIL 1 ON E4.1.

(8) ATS 400A 277/480V, 3Ø, 4W, SEE DETAIL 2 ON SHEET E4.1.

(9) GENERATOR 125KW, 277/480V, 3Ø, 4W, SEE DETAIL 1 ON E4.3.

(10) TRANSFORMER 50KVA 480V – 120/240V 1Ø, SEE DETAIL 2 ON SHEET E4.1.

(11) PANELBOARD, 120/240V, 1Ø, 3W, SEE DETAIL 2 ON E4.1.

(12) DISTRIBUTION PANEL DSP-1 400A 277/480V, 3Ø, 4W, SEE DETAIL 2 ON SHEET E4.1.

(13) ELECTRICAL CONTRACTOR SHALL INSTALL POWER FEED TO MINI SPLIT AIR CONDITIONER AND HEAT PUMP & MAKE ALL 240V CONNECTIONS.

(14) TANKLESS WATER HEATER & DISCONENCT. ELECTRICAL CONTRACTOR SHALL MAKE ALL POWER AND CONTROL CONNECTIONS PER THESE PLANS AND SPECIFICATIONS AND THE MANUFACTURERS REQUIREMENTS.

(15) GROUNDING ELECTRODE CONDUCTORS, GROUND ROD, AND INSPECTION WELL FOR ONLY THE FIRST GROUND ROD, PER SINGLE LINE DIAGRAMS AND DETAILS ON SHEET E4.6.

(16) LIGHTNING PROTECTION SYSTEM, PER NFPA AND DETAIL 6 ON SHEET E4.6

(17) CLASSIFIED SEAL OFF LISTED FOR CLASS 1 DIV 1. LOCATE WITHIN 10 FEET OF CLASSIFIED AREA BOUNDARY. PVC COATED RMS EYS TYPE OR EQUIVALENT. SEAL SHALL HAVE SEALING COMPOUND CHICO, OR EQUAL.

(20) 20A HEADWORKS CONTROL PANEL, BY VENDOR CLASS 1 DIVISION 2 LISTED. ELECTRICAL CONTRACTOR SHALL MAKE ALL POWER AND CONTROL CONNECTIONS PER THESE PLANS AND SPECIFICATIONS AND THE MANUFACTURERS REQUIREMENTS. SEE DETAIL 1 ON SHEET E4.4.

(21) INFLUENT COARSE SCREEN MOTOR. ELECTRICAL CONTRACTOR SHALL MAKE ALL POWER AND CONTROL CONNECTIONS PER THESE PLANS AND SPECIFICATIONS AND THE MANUFACTURERS REQUIREMENTS.

(22) INFLUENT CONVEYOR MOTOR. ELECTRICAL CONTRACTOR SHALL MAKE ALL POWER AND CONTROL CONNECTIONS PER THESE PLANS AND SPECIFICATIONS AND THE MANUFACTURERS REQUIREMENTS.

(23) POTABLE SOLENOID VALVE AT HEADWORKS. ELECTRICAL CONTRACTOR SHALL MAKE ALL POWER AND CONTROL CONNECTIONS PER THESE PLANS AND SPECIFICATIONS AND THE MANUFACTURERS REQUIREMENTS.

(24) ULTRASONIC LEVEL TRANSDUCER. ELECTRICAL CONTRACTOR SHALL MAKE ALL POWER AND CONTROL CONNECTIONS PER THESE PLANS AND SPECIFICATIONS AND THE MANUFACTURERS REQUIREMENTS.

(30) SBR PANEL BY VENDOR, ELECTRICAL CONTRACTOR SHALL MAKE ALL POWER AND CONTROL CONNECTIONS PER THESE PLANS AND SPECIFICATIONS AND THE MANUFACTURERS REQUIREMENTS.

(31) SBR INFLUENT VALVE. ELECTRICAL CONTRACTOR SHALL MAKE ALL POWER AND CONTROL CONNECTIONS PER THESE PLANS AND SPECIFICATIONS AND THE MANUFACTURERS REQUIREMENTS.

(32) SBR SUBMERSIBLE MIXER. ELECTRICAL CONTRACTOR SHALL MAKE ALL POWER AND CONTROL CONNECTIONS PER THESE PLANS AND SPECIFICATIONS AND THE MANUFACTURERS REQUIREMENTS.

(33) WAS TRANSFER PUMP. ELECTRICAL CONTRACTOR SHALL MAKE ALL POWER AND CONTROL CONNECTIONS PER THESE PLANS AND SPECIFICATIONS AND THE MANUFACTURERS REQUIREMENTS.

(34) DECANT MOTOR. ELECTRICAL CONTRACTOR SHALL MAKE ALL POWER AND CONTROL CONNECTIONS PER THESE PLANS AND SPECIFICATIONS AND THE MANUFACTURERS REQUIREMENTS.

(35) SBR DECANT VALVE. ELECTRICAL CONTRACTOR SHALL MAKE ALL POWER AND CONTROL CONNECTIONS PER THESE PLANS AND SPECIFICATIONS AND THE MANUFACTURERS REQUIREMENTS.

(36) DO TRANSMITTER AND ANALYZER. ELECTRICAL CONTRACTOR SHALL MAKE ALL POWER AND CONTROL CONNECTIONS PER THESE PLANS AND SPECIFICATIONS AND THE MANUFACTURERS REQUIREMENTS.

(37) SUBMERSIBLE PRESSURE TRANSDUCER. ELECTRICAL CONTRACTOR SHALL MAKE ALL POWER AND CONTROL CONNECTIONS PER THESE PLANS AND SPECIFICATIONS AND THE MANUFACTURERS REQUIREMENTS.

(38) LEVEL FLOAT. ELECTRICAL CONTRACTOR SHALL MAKE ALL POWER AND CONTROL CONNECTIONS PER THESE PLANS AND SPECIFICATIONS AND THE MANUFACTURERS REQUIREMENTS.

(39) SBR MOTOR CONTROL PANEL, PROVIDE AND INSTALL. ELECTRICAL CONTRACTOR SHALL MAKE ALL POWER AND CONTROL CONNECTIONS PER THESE PLANS AND SPECIFICATIONS AND THE MANUFACTURERS REQUIREMENTS.

(40) SBR EFFLUENT VALVE. ELECTRICAL CONTRACTOR SHALL MAKE ALL POWER AND CONTROL CONNECTIONS PER THESE PLANS AND SPECIFICATIONS AND THE MANUFACTURERS REQUIREMENTS.

(41) FLOW METER. ELECTRICAL CONTRACTOR SHALL MAKE ALL POWER AND CONTROL CONNECTIONS PER THESE PLANS AND SPECIFICATIONS AND THE MANUFACTURERS REQUIREMENTS.

(42) SBR AIR VALVE. ELECTRICAL CONTRACTOR SHALL MAKE ALL POWER AND CONTROL CONNECTIONS PER THESE PLANS AND SPECIFICATIONS AND THE MANUFACTURERS REQUIREMENTS.

(50) VARIABLE FREQUENCY DRIVE. ELECTRICAL CONTRACTOR SHALL MAKE ALL POWER AND CONTROL CONNECTIONS PER THESE PLANS AND SPECIFICATIONS AND THE MANUFACTURERS REQUIREMENTS.

(51) SBR AERATION BLOWER WITH INTEGRAL DISCONNECT. ELECTRICAL CONTRACTOR SHALL MAKE ALL POWER AND CONTROL CONNECTIONS PER THESE PLANS AND SPECIFICATIONS AND THE MANUFACTURERS REQUIREMENTS.

(52) DIGESTER AERATION BLOWER WITH INTEGRAL DISCONNECT. ELECTRICAL CONTRACTOR SHALL MAKE ALL POWER AND CONTROL CONNECTIONS PER THESE PLANS AND SPECIFICATIONS AND THE MANUFACTURERS REQUIREMENTS.

(53) PRESSURE TRANSDUCER. ELECTRICAL CONTRACTOR SHALL MAKE ALL POWER AND CONTROL CONNECTIONS PER THESE PLANS AND SPECIFICATIONS AND THE MANUFACTURERS REQUIREMENTS.

(54) TEMPERATURE TRANSDUCER. ELECTRICAL CONTRACTOR SHALL MAKE ALL POWER AND CONTROL CONNECTIONS PER THESE PLANS AND SPECIFICATIONS AND THE MANUFACTURERS REQUIREMENTS.

(60) 20A SLUDGE BAGGING SYSTEM CONTROL PANEL, BY VENDOR. ELECTRICAL CONTRACTOR SHALL MAKE ALL POWER AND CONTROL CONNECTIONS PER THESE PLANS AND SPECIFICATIONS AND THE MANUFACTURERS REQUIREMENTS.

(61) POTABLE WATER VALVE. ELECTRICAL CONTRACTOR SHALL MAKE ALL POWER AND CONTROL CONNECTIONS PER THESE PLANS AND SPECIFICATIONS AND THE MANUFACTURERS REQUIREMENTS.

(62) POLYMER METERING PUMP. ELECTRICAL CONTRACTOR SHALL MAKE ALL POWER AND CONTROL CONNECTIONS PER THESE PLANS AND SPECIFICATIONS AND THE MANUFACTURERS REQUIREMENTS.

(63) DRY POLYMER MIXER. ELECTRICAL CONTRACTOR SHALL MAKE ALL POWER AND CONTROL CONNECTIONS PER THESE PLANS AND SPECIFICATIONS AND THE MANUFACTURERS REQUIREMENTS.

(64) DEWATERING FEED PUMP. ELECTRICAL CONTRACTOR SHALL MAKE ALL POWER AND CONTROL CONNECTIONS PER THESE PLANS AND SPECIFICATIONS AND THE MANUFACTURERS REQUIREMENTS.

(70) 30A DRYING BED LIFT PUMP CONTROL PANEL, 480V, 3Ø, 4W. ELECTRICAL CONTRACTOR SHALL MAKE ALL POWER AND CONTROL CONNECTIONS PER THESE PLANS AND SPECIFICATIONS AND THE MANUFACTURERS REQUIREMENTS. SEE DETAIL 1 ON SHEET E4.4.

(71) DRYING BED LIFT PUMP. ELECTRICAL CONTRACTOR SHALL MAKE ALL POWER AND CONTROL CONNECTIONS PER THESE PLANS AND SPECIFICATIONS AND THE MANUFACTURERS REQUIREMENTS. SEE DETAIL 4 ON SHEET E4.5.

(72) LEVEL FLOAT. ELECTRICAL CONTRACTOR SHALL MAKE ALL POWER AND CONTROL CONNECTIONS PER THESE PLANS AND SPECIFICATIONS AND THE MANUFACTURERS REQUIREMENTS. SEE DETAIL 4 ON SHEET E4.5.

(80) OVERFLOW LIFT PUMP CONTROL PANEL, BY VENDOR. 240V, 1Ø, 3W. ELECTRICAL CONTRACTOR SHALL MAKE ALL POWER AND CONTROL CONNECTIONS PER THESE PLANS AND SPECIFICATIONS AND THE MANUFACTURERS REQUIREMENTS. SEE DETAIL 1 ON SHEET E4.4.

(81) OVERFLOW LIFT PUMP. ELECTRICAL CONTRACTOR SHALL MAKE ALL POWER AND CONTROL CONNECTIONS PER THESE PLANS AND SPECIFICATIONS AND THE MANUFACTURERS REQUIREMENTS. SEE DETAIL 4 ON SHEET E4.5.

(82) LEVEL FLOAT. ELECTRICAL CONTRACTOR SHALL MAKE ALL POWER AND CONTROL CONNECTIONS PER THESE PLANS AND SPECIFICATIONS AND THE MANUFACTURERS REQUIREMENTS. SEE DETAIL 4 ON SHEET E4.5.

(90) JOINT TRENCH WITH WATER LINES. MAINTAIN 24-INCH SEPARATION. SEE DETAIL 3 ON SHEET E4.3.

(91) STACKED #7 CONCRETE PULL BOX. INSTALL AS SHOWN OR AS NEEDED IF CONDUIT RUNS WILL EXCEED 360 DEGREE OF BENDS OR THE LENGTH EXCEEDS 400 FEET. INSTALL 1 FOR POWER AND 1 FOR CONTROL. SEE DETAIL 5 ON SHEET E4.3.

(92) STANCHION MOUNTED NEMA 4X SST JUNCTION BOXES. MAINTAIN 3' CLEARANCE IN FRONT OF EQUIPMENT. EXTRA SLACK SHALL REMAIN IN THE J-BOX FOR FUTURE LEVEL ADJUSTMENT. SEE DETAIL 2 ON SHEET E4.2 AND DETAIL 1 ON SHEET E4.4.

(93) TRAFFIC BOLLARD TO BE INSTALLED PER CIVIL PLANS. LOCATE OUT OF 4 FOOT WORKING SPACE ENVELOPE PER NEC.

(94) NON-FUSED DISCONNECT, NEMA 4X FOR OUTDOOR AND CLASS 1 DIV 1 WITHIN CLASSIFIED BOUNDARY. IF LOCATION IS ABOVE BOUNDARY, NEMA 4X WITH CLASSIFIED SEAL OFFS IS ACCEPTABLE. PROVIDE PERMANENT LABEL SUITABLE FOR CORROSIVE ENVIRONMENTS AND UV RESISTANT. MATCH LABEL NAMING CONVENTION WITH P&ID. SEE DETAIL 5 ON SHEET E4.2 & SEE DETAIL 1 ON SHEET E4.4.

(95) ROTARY TYPE DISCONNECT, NEMA 4X FOR OUTDOOR AND CLASS 1 DIV 1 WITHIN CLASSIFIED BOUNDARY. IF LOCATION IS ABOVE BOUNDARY, NEMA 4X WITH CLASSIFIED SEAL OFFS IS ACCEPTABLE. PROVIDE PERMANENT LABEL SUITABLE FOR CORROSIVE ENVIRONMENTS AND UV RESISTANT. MATCH LABEL NAMING CONVENTION WITH P&ID. SEE DETAIL 5 ON SHEET E4.2 & SEE DETAIL 1 ON SHEET E4.4.

(96) E-STOP, NEMA 4X FOR OUTDOOR AND CLASS 1 DIV 1 WITHIN CLASSIFIED BOUNDARY. IF LOCATION IS ABOVE BOUNDARY, NEMA 4X WITH CLASSIFIED SEAL OFFS IS ACCEPTABLE. PROVIDE PERMANENT LABEL SUITABLE FOR CORROSIVE ENVIRONMENTS AND UV RESISTANT. MATCH LABEL NAMING CONVENTION WITH P&ID. SEE DETAIL 5 ON SHEET E4.2.

(97) 20A 120V GFCI DUPLEX RECEPTACLE WITH METAL WEATHERPROOF WHILE-IN-USE AND LOCKABLE COVER INSTALLED PER DETAIL 1 ON SHEET E4.2.

(98) 20A 120V GFCI DUPLEX RECEPTACLE WITH METAL WEATHERPROOF WHILE-IN-USE AND LOCKABLE COVER INSTALLED ONTO LIGHT POLE. SEE DETAIL 2 ON SHEET E4.5.

(99) CLASSIFIED AREA VERIFY BOUNDARY WITH THE NFPA. INSTALL ANY PANELS, DISCONNECTS, SPLICES, ARC MAKING EQUIPMENT OUT OF THE BOUNDARY, WHERE NOT POSSIBLE THEN INSTALL CLASS 1 DIV 1 LISTED EQUIPMENT. ALL CONDUIT WITHIN BOUNDARY SHALL BE CLASS 1 DIV 1 OR 2 RATED AS REQUIRED BY THE BOUNDARY. USE PVC COATED THREADED RMC CONDUIT, INSTALL STAINLESS STEEL 316 ENCLOSURES, HARDWARE AND EQUIPMENT WITHIN 10 FEET OF THE BOUNDARY. INSTALL CLASSIFIED SEAL OFFS WITHIN 10 FEET OF THE BOUNDARY, AT A PANEL OR JUNCTION BOX IS PREFERRED.

WRIGHT engineering corporation
ELECTRICAL ENGINEERING AND DESIGN
165 EAST CHILTON DRIVE
CHANDLER, ARIZONA 85225
PHONE: 480.497.5829
FAX: 480.497.5807
www.wrightengineering.us
Wright Project # 23319

CALL TWO WORKING DAYS BEFORE YOU DIG
602-263-1100
1-800-STAKE-IT
(OUTSIDE MARICOPA COUNTY)

ISSUED FOR BID

PREPARED BY: PACE Advanced Water Engineering
8723 E. VIA de COMMERCIO, SUITE A-204 | SCOTTSDALE, CA 85258
P: (408) 991-3595 | www.pacewater.com

JOB: TOWN OF JEROME WASTEWATER TREATMENT PLANT, YAVAPAI CO. AZ

TITLE: ELECTRICAL NOTES + LEGEND

PREPARED BY: WRIGHT ENGINEERING | DESIGNED BY: JHB | DRAWN BY: XAG | CHECKED BY: JHB | SCALE: AS NOTED | DATE: NOV 2025 | JOB NO. B614

REVISIONS: NO | BY | DATE | REVISIONS | DATE | APP.

Registered Professional Engineer (Electrical) Certificate No. 73954 JACOB BIELEFELDT Date Signed 11-24-2025 Expires 9-30-27

THESE DRAWINGS ARE THE PROPERTY OF P.A.C.E. AND SHALL NOT BE REPRODUCED IN ANY MANNER NOR BE USED FOR CONSTRUCTION UNLESS STAMPED "ISSUED FOR CONSTRUCTION".

SHEET E1.2

JOB NO. B614

H:\2023\23319-Jerome WWTP\23319-E.dwg - Tab: E1.2 - by jacobb on 11/24/25 at 6:56:46 PM

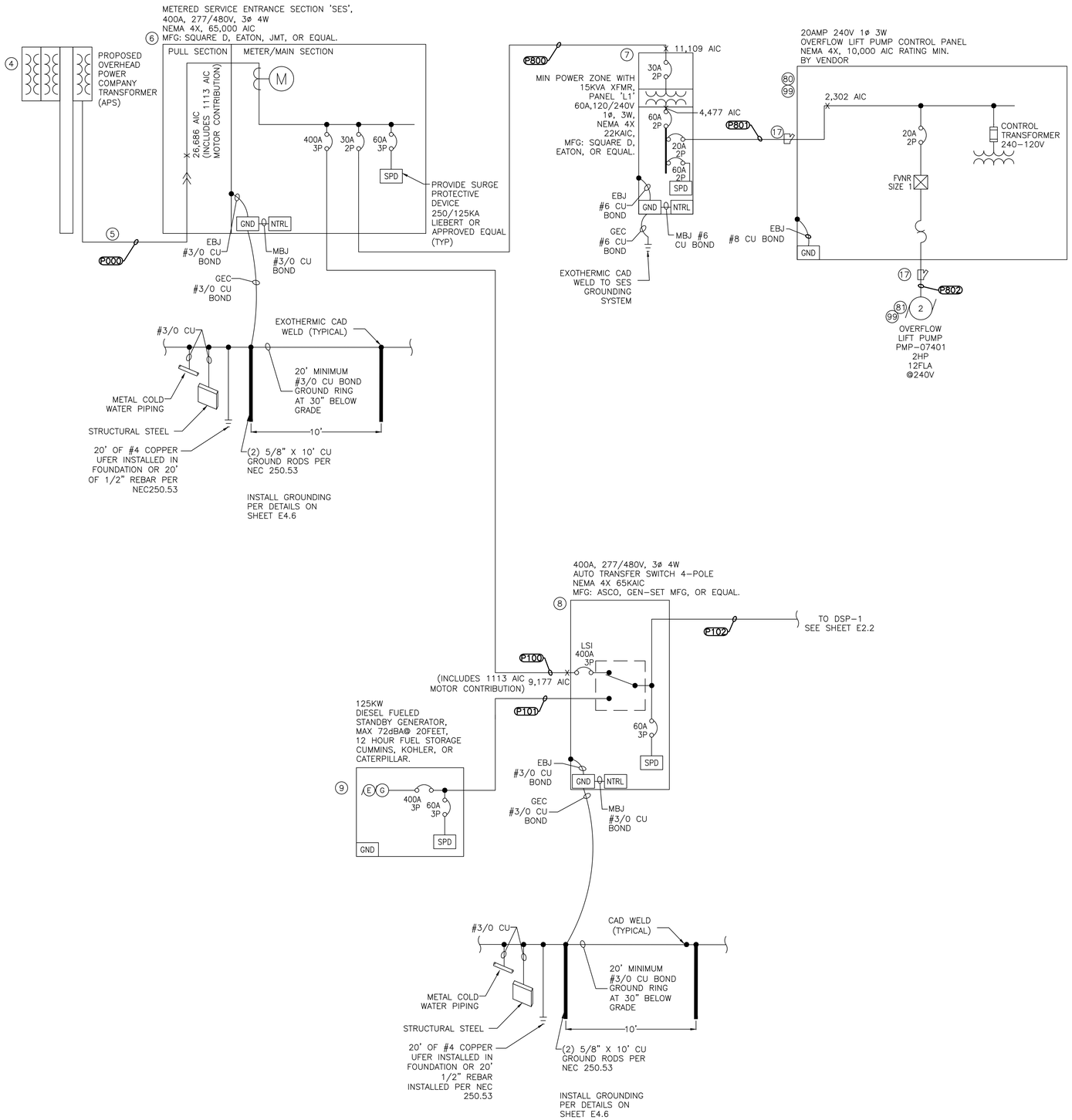

CONSTRUCTION NOTES

4. COORDINATE WITH APS TO REPLACE THE EXISTING POLE MOUNTED SINGLE PHASE TRANSFORMER. APS TO INSTALL THREE PHASE TRANSFORMERS. CONTRACTOR SHALL VERIFY LOCATION OF NEW TRANSFORMER WITH APS. APS PLANS WILL DETERMINE EXACT LOCATION AND TAKE PRECEDENCE OVER THESE DRAWINGS. COORDINATE ALL WORK WITH APS.
5. APS SERVICE LINE. TRENCH AND INSTALL CONDUIT PER APS SPECIFICATIONS. POWER COMPANY PLANS WILL DETERMINE EXACT LOCATION OF CONDUIT AND TAKE PRECEDENCE OVER THESE DRAWINGS.
6. SES, 400 AMP, 277/480V, 3ø, 4W, SEE DETAIL 1 ON E4.1.
7. MINI-POWER ZONE AND PANELBOARD. SEE DETAIL 1 ON E4.1.
8. ATS 400A 277/480V, 3ø, 4W, SEE DETAIL 2 ON SHEET E4.1.
9. GENERATOR 125KW, 277/480V, 3ø, 4W, SEE DETAIL 1 ON E4.3.
17. CLASSIFIED SEAL OFF LISTED FOR CLASS 1 DIV 1. LOCATE WITHIN 10 FEET OF CLASSIFIED AREA BOUNDARY. PVC COATED RMS EYS TYPE OR EQUIVALENT. SEAL SHALL HAVE SEALING COMPOUND CHICO, OR EQUAL.
80. OVERFLOW LIFT PUMP CONTROL PANEL, BY VENDOR. 240V, 1ø, 3W. ELECTRICAL CONTRACTOR SHALL MAKE ALL POWER AND CONTROL CONNECTIONS PER THESE PLANS AND SPECIFICATIONS AND THE MANUFACTURERS REQUIREMENTS. SEE DETAIL 1 ON SHEET E4.4.
81. OVERFLOW LIFT PUMP. ELECTRICAL CONTRACTOR SHALL MAKE ALL POWER AND CONTROL CONNECTIONS PER THESE PLANS AND SPECIFICATIONS AND THE MANUFACTURERS REQUIREMENTS. SEE DETAIL 4 ON SHEET E4.5.
99. CLASSIFIED AREA VERIFY BOUNDARY WITH THE NFPA. INSTALL ANY PANELS, DISCONNECTS, SPLICES, ARC MAKING EQUIPMENT OUT OF THE BOUNDARY, WHERE NOT POSSIBLE THEN INSTALL CLASS 1 DIV 1 LISTED EQUIPMENT. ALL CONDUIT WITHIN BOUNDARY SHALL BE CLASS 1 DIV 1 OR 2 RATED AS REQUIRED BY THE BOUNDARY. USE PVC COATED THREADED RMC CONDUIT. INSTALL STAINLESS STEEL 316 ENCLOSURES, HARDWARE AND EQUIPMENT WITHIN 10 FEET OF THE BOUNDARY. INSTALL CLASSIFIED SEAL OFFS WITHIN 10 FEET OF THE BOUNDARY, AT A PANEL OR JUNCTION BOX IS PREFERRED.

1A SINGLE LINE DIAGRAM
NO SCALE

277/480V 3ø 4W

WRIGHT engineering corporation
ELECTRICAL ENGINEERING AND DESIGN
165 EAST CHILTON DRIVE
CHANDLER, ARIZONA 85225
PHONE: 480.497.5829
FAX: 480.497.5807
www.wrightengineering.us
Wright Project # 23319

CALL TWO WORKING DAYS BEFORE YOU DIG
602-263-1100
1-800-STAKE-IT
(OUTSIDE MARICOPA COUNTY)

NO	BY	DATE	REVISIONS	DATE	APP.

Registered Professional Engineer (Electrical) Certificate No. 73954 JASON BELLEDIT 3-31-27 Expires 3-31-27

PREPARED BY: WRIGHT ENGINEERING
DESIGNED BY: JHB
DRAWN BY: XAG
CHECKED BY: JHB
SCALE: AS NOTED
DATE: NOV 2025
JOB NO.: B614

TITLE: ELECTRICAL SINGLE LINE DIAGRAM I

JOB: TOWN OF JEROME WASTEWATER TREATMENT PLANT
YAVAPAI CO. AZ

PREPARED BY:

PACE
Advanced Water Engineering
8723 E. Via de Commercio, Suite 104, Scottsdale, CA 85258
p. (408) 991-3595 | www.pacewater.com

SHEET
E2.1
73 OF 99 SHEETS

JOB NO. B614

ISSUED FOR BID

THESE DRAWINGS ARE THE PROPERTY OF P.A.C.E. AND SHALL NOT BE REPRODUCED IN ANY MANNER NOR BE USED FOR CONSTRUCTION UNLESS STAMPED "ISSUED FOR CONSTRUCTION".

H:\2025\2513-Jerome WW TP\2513-E Dwgs - Feb 03 - 1\y-yvada.ctb 11/4/25 4:58:48 PM

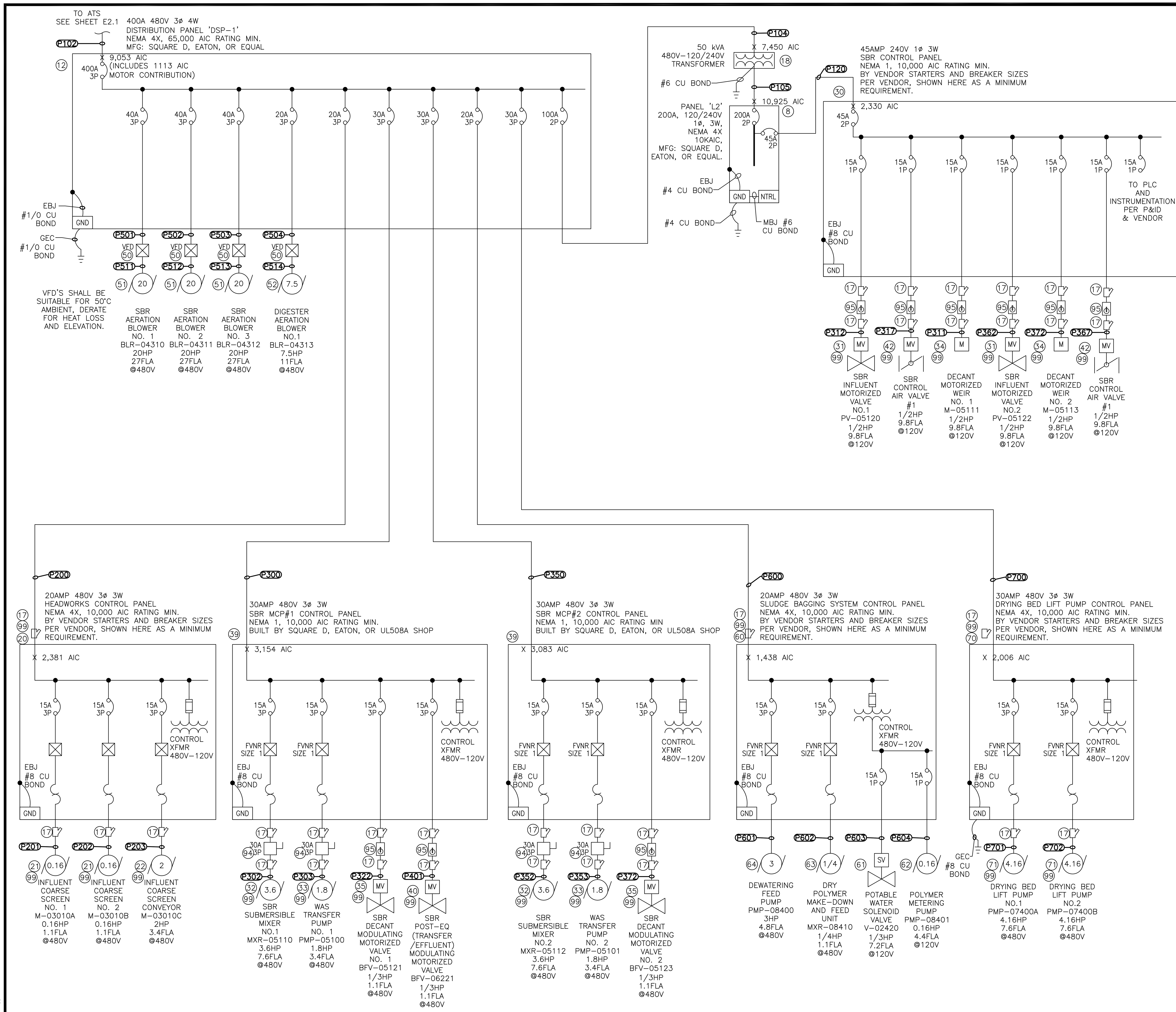

1B SINGLE LINE DIAGRAM
NO SCALE

CONSTRUCTION NOTES

(12) DISTRIBUTION PANEL DSP-1 400A 277/480V, 3ø, 4W, SEE DETAIL 2 ON SHEET E4.1.

(17) CLASSIFIED SEAL OFF LISTED FOR CLASS 1 DIV 1. LOCATE WITHIN 10 FEET OF CLASSIFIED AREA BOUNDARY. PVC COATED RMS EYS TYPE OR EQUIVALENT. SEAL SHALL HAVE SEALING COMPOUND CHICO, OR EQUAL.

(20) 20A HEADWORKS CONTROL PANEL, BY VENDOR CLASS 1 DIVISION 2 LISTED. ELECTRICAL CONTRACTOR SHALL MAKE ALL POWER AND CONTROL CONNECTIONS PER THESE PLANS AND SPECIFICATIONS AND THE MANUFACTURERS REQUIREMENTS. SEE DETAIL 1 ON SHEET E4.4.

(21) INFLUENT COARSE SCREEN MOTOR. ELECTRICAL CONTRACTOR SHALL MAKE ALL POWER AND CONTROL CONNECTIONS PER THESE PLANS AND SPECIFICATIONS AND THE MANUFACTURERS REQUIREMENTS.

(22) INFLUENT CONVEYOR MOTOR. ELECTRICAL CONTRACTOR SHALL MAKE ALL POWER AND CONTROL CONNECTIONS PER THESE PLANS AND SPECIFICATIONS AND THE MANUFACTURERS REQUIREMENTS.

(30) SBR PANEL BY VENDOR, ELECTRICAL CONTRACTOR SHALL MAKE ALL POWER AND CONTROL CONNECTIONS PER THESE PLANS AND SPECIFICATIONS AND THE MANUFACTURERS REQUIREMENTS.

(31) SBR INFLUENT VALVE. ELECTRICAL CONTRACTOR SHALL MAKE ALL POWER AND CONTROL CONNECTIONS PER THESE PLANS AND SPECIFICATIONS AND THE MANUFACTURERS REQUIREMENTS.

(32) SBR SUBMERSIBLE MIXER. ELECTRICAL CONTRACTOR SHALL MAKE ALL POWER AND CONTROL CONNECTIONS PER THESE PLANS AND SPECIFICATIONS AND THE MANUFACTURERS REQUIREMENTS.

(33) WAS TRANSFER PUMP. ELECTRICAL CONTRACTOR SHALL MAKE ALL POWER AND CONTROL CONNECTIONS PER THESE PLANS AND SPECIFICATIONS AND THE MANUFACTURERS REQUIREMENTS.

(34) DECANT MOTOR. ELECTRICAL CONTRACTOR SHALL MAKE ALL POWER AND CONTROL CONNECTIONS PER THESE PLANS AND SPECIFICATIONS AND THE MANUFACTURERS REQUIREMENTS.

(35) SBR DECANT VALVE. ELECTRICAL CONTRACTOR SHALL MAKE ALL POWER AND CONTROL CONNECTIONS PER THESE PLANS AND SPECIFICATIONS AND THE MANUFACTURERS REQUIREMENTS.

(39) SBR MOTOR CONTROL PANEL, PROVIDE AND INSTALL. ELECTRICAL CONTRACTOR SHALL MAKE ALL POWER AND CONTROL CONNECTIONS PER THESE PLANS AND SPECIFICATIONS AND THE MANUFACTURERS REQUIREMENTS.

(40) SBR EFFLUENT VALVE. ELECTRICAL CONTRACTOR SHALL MAKE ALL POWER AND CONTROL CONNECTIONS PER THESE PLANS AND SPECIFICATIONS AND THE MANUFACTURERS REQUIREMENTS.

(42) SBR AIR VALVE. ELECTRICAL CONTRACTOR SHALL MAKE ALL POWER AND CONTROL CONNECTIONS PER THESE PLANS AND SPECIFICATIONS AND THE MANUFACTURERS REQUIREMENTS.

(50) VARIABLE FREQUENCY DRIVE. ELECTRICAL CONTRACTOR SHALL MAKE ALL POWER AND CONTROL CONNECTIONS PER THESE PLANS AND SPECIFICATIONS AND THE MANUFACTURERS REQUIREMENTS.

(51) SBR AERATION BLOWER WITH INTEGRAL DISCONNECT. ELECTRICAL CONTRACTOR SHALL MAKE ALL POWER AND CONTROL CONNECTIONS PER THESE PLANS AND SPECIFICATIONS AND THE MANUFACTURERS REQUIREMENTS.

(52) DIGESTER AERATION BLOWER WITH INTEGRAL DISCONNECT. ELECTRICAL CONTRACTOR SHALL MAKE ALL POWER AND CONTROL CONNECTIONS PER THESE PLANS AND SPECIFICATIONS AND THE MANUFACTURERS REQUIREMENTS.

(60) 20A SLUDGE BAGGING SYSTEM CONTROL PANEL, BY VENDOR. ELECTRICAL CONTRACTOR SHALL MAKE ALL POWER AND CONTROL CONNECTIONS PER THESE PLANS AND SPECIFICATIONS AND THE MANUFACTURERS REQUIREMENTS.

(61) POTABLE WATER VALVE. ELECTRICAL CONTRACTOR SHALL MAKE ALL POWER AND CONTROL CONNECTIONS PER THESE PLANS AND SPECIFICATIONS AND THE MANUFACTURERS REQUIREMENTS.

(62) POLYMER METERING PUMP. ELECTRICAL CONTRACTOR SHALL MAKE ALL POWER AND CONTROL CONNECTIONS PER THESE PLANS AND SPECIFICATIONS AND THE MANUFACTURERS REQUIREMENTS.

(63) DRY POLYMER MIXER. ELECTRICAL CONTRACTOR SHALL MAKE ALL POWER AND CONTROL CONNECTIONS PER THESE PLANS AND SPECIFICATIONS AND THE MANUFACTURERS REQUIREMENTS.

(64) DEWATERING FEED PUMP. ELECTRICAL CONTRACTOR SHALL MAKE ALL POWER AND CONTROL CONNECTIONS PER THESE PLANS AND SPECIFICATIONS AND THE MANUFACTURERS REQUIREMENTS.

(70) 30A DRYING BED LIFT PUMP CONTROL PANEL, 480V, 3ø, 4W. ELECTRICAL CONTRACTOR SHALL MAKE ALL POWER AND CONTROL CONNECTIONS PER THESE PLANS AND SPECIFICATIONS AND THE MANUFACTURERS REQUIREMENTS. SEE DETAIL 1 ON SHEET E4.4.

(71) DRYING BED LIFT PUMP. ELECTRICAL CONTRACTOR SHALL MAKE ALL POWER AND CONTROL CONNECTIONS PER THESE PLANS AND SPECIFICATIONS AND THE MANUFACTURERS REQUIREMENTS. SEE DETAIL 4 ON SHEET E4.5.

(94) NON-FUSED DISCONNECT, NEMA 4X FOR OUTDOOR AND CLASS 1 DIV 1 WITHIN CLASSIFIED BOUNDARY. IF LOCATION IS ABOVE BOUNDARY, NEMA 4X WITH CLASSIFIED SEAL OFFS IS ACCEPTABLE. PROVIDE PERMANENT LABEL SUITABLE FOR CORROSIVE ENVIRONMENTS AND UV RESISTANT. MATCH LABEL NAMING CONVENTION WITH P&ID. SEE DETAIL 5 ON SHEET E4.2 & SEE DETAIL 1 ON SHEET E4.4.

(95) ROTARY TYPE DISCONNECT, NEMA 4X FOR OUTDOOR AND CLASS 1 DIV 1 WITHIN CLASSIFIED BOUNDARY. IF LOCATION IS ABOVE BOUNDARY, NEMA 4X WITH CLASSIFIED SEAL OFFS IS ACCEPTABLE. PROVIDE PERMANENT LABEL SUITABLE FOR CORROSIVE ENVIRONMENTS AND UV RESISTANT. MATCH LABEL NAMING CONVENTION WITH P&ID. SEE DETAIL 5 ON SHEET E4.2 & SEE DETAIL 1 ON SHEET E4.4.

(99) CLASSIFIED AREA VERIFY BOUNDARY WITH THE NFPA. INSTALL ANY PANELS, DISCONNECTS, SPLICES, ARC MAKING EQUIPMENT OUT OF THE BOUNDARY, WHERE NOT POSSIBLE THEN INSTALL CLASS 1 DIV 1 LISTED EQUIPMENT. ALL CONDUIT WITHIN BOUNDARY SHALL BE CLASS 1 DIV 1 OR 2 RATED AS REQUIRED BY THE BOUNDARY. USE PVC COATED THREADED RMC CONDUIT, INSTALL STAINLESS STEEL 316 ENCLOSURES, HARDWARE AND EQUIPMENT WITHIN 10 FEET OF THE BOUNDARY. INSTALL CLASSIFIED SEAL OFFS WITHIN 10 FEET OF THE BOUNDARY, AT A PANEL OR JUNCTION BOX IS PREFERRED.

ISSUED FOR BID

WRIGHT engineering corporation
ELECTRICAL ENGINEERING AND DESIGN
165 EAST CHILTON DRIVE
CHANDLER, ARIZONA 85225
PHONE: 480.497.5829
FAX: 480.497.5807
www.wrightengineering.us
Wright Project # 23319

CALL TWO WORKING DAYS BEFORE YOU DIG
602-263-1100
1-800-STAKE-IT
(OUTSIDE MARICOPA COUNTY)

NO	BY	DATE	REVISIONS	DATE	APP.

Registered Professional Engineer (Electrical) Certificate No. 73954 JACOB BIELEFELDT Date Signed 11-24-2025 Expires 9-30-27

PREPARED BY: WRIGHT ENGINEERING
DESIGNED BY: JHB
DRAWN BY: XAG
CHECKED BY: JHB
SCALE: AS NOTED
DATE: NOV 2025
JOB NO.: B614

TITLE: ELECTRICAL SINGLE LINE DIAGRAM II

JOB: TOWN OF JEROME WASTEWATER TREATMENT PLANT
YAVAPAI CO. AZ

PREPARED BY: PACE Advanced Water Engineering
8723 E. VIA de COMMERCIO, SUITE A-204 | SCOTTSDALE, CA 85258
P: (408) 991-3595 | www.pacewater.com

THESE DRAWINGS ARE THE PROPERTY OF P.A.C.E. AND SHALL NOT BE REPRODUCED IN ANY MANNER NOR BE USED FOR CONSTRUCTION UNLESS STAMPED "ISSUED FOR CONSTRUCTION".

H:\2023\23319-Jerome WWTP\23319-E.dwg - Tab: E2.2 - by jacobb on 11/24/25 at 6:56:46 PM

SES LOAD CALCULATION SUMMARY

LOAD DESCRIPTION	LOAD	STANDBY
MCC–A	256.6	256.6
PANEL L1	5.0	0
TOTAL AMPS AT 480V 3ø	261.6	256.6
TOTAL KVA AT 480V 3ø	217.5	217.5

MCC LOAD CALCULATION SUMMARY

LOAD DESCRIPTION	LOAD	STANDBY
SBR AERATION BLOWER NO. 1 BLR–04310 (20HP)	27.0	27.0
SBR AERATION BLOWER NO. 2 BLR–04311 (20HP)	27.0	27.0
SBR AERATION BLOWER NO. 3 BLR–04312 (20HP)	27.0	27.0
DIGESTION AERATION BLOWER NO. 1 BLR–04313 (7.5HP)	11.0	11.0
SBR SUBMERSIBLE MIXER NO. 1 MXR–05110 (3.6HP)	7.6	7.6
SBR SUBMERSIBLE MIXER NO. 2 MXR–05112 (3.6HP)	7.6	7.6
WAS TRANSFER PUMP NO. 1 PMP–05100 (1.8HP)	3.4	3.4
WAS TRANSFER PUMP NO. 2 PMP–05101 (1.8HP)	3.4	3.4
SBR DECANT MODULATING VALVE NO. 1 BFV–05121 (1/3HP)	1.1	1.1
SBR DECANT VALVE NO. 2 BFV–05123 (1/3HP)	1.1	1.1
SBR POST–EQ VALVE BFV–05121 (1/3HP)	1.1	1.1
DRYING BED LIFT PUMP CONTROL PANEL	19.1	19.1
HEADWORKS CONTROL PANEL	5.6	5.6
SLUDGE BAGGING SYSTEM CONTROL PANEL	12.1	12.1
PANEL 'L2'	95.7	95.7
25% OF THE LARGEST MOTOR	**6.8**	**6.8**
TOTAL AMPS / 480V 3ø	256.6	256.6
TOTAL KVA AT / ø	213.3	213.3

DRYING BED LIFT PUMP CONTROL PANEL LOAD CALCULATION SUMMARY

LOAD DESCRIPTION	LOAD	STANDBY
DRYING BED LIFT PUMP NO. 1 PMP–07400A (4.16HP)	7.6	7.6
DRYING BED LIFT PUMP NO. 2 PMP–07400B (4.16HP)	7.6	7.6
CONTROL	2.0	2.0
25% OF THE LARGEST MOTOR	1.9	1.9
TOTAL AMPS / 480V 3ø	19.1	19.1
TOTAL KVA AT / ø	15.9	15.9

HEADWORKS CONTROL PANEL LOAD CALCULATION SUMMARY

LOAD DESCRIPTION	LOAD	STANDBY
INFLUENT COARSE SCREEN NO. 1 M–03010A (.16HP)	1.1	1.1
INFLUENT COARSE SCREEN NO. 2 M–03010B (.16HP)	1.1	1.1
INFLUENT COARSE SCREEN CONVERYOR M–03010C (1/2HP)	1.1	1.1
CONTROL	2.0	2.0
25% OF THE LARGEST MOTOR	**0.3**	**0.3**
TOTAL AMPS / 480V 3ø	5.6	5.6
TOTAL KVA AT / ø	4.6	4.6

SLUDGE BAGGING SYSTEM CONTROL PANEL LOAD CALCULATION SUMMARY

LOAD DESCRIPTION	LOAD	STANDBY
DEWATERING FEED PUMP PMP–08400 (3HP)	4.8	4.8
DRY POLYMER MAKE–DOWN AND FEED UNIT MXR–08410 (1/4HP)	1.1	1.1
CONTROL	5.0	5.0
25% OF THE LARGEST MOTOR	**1.2**	**1.2**
TOTAL AMPS / 480V 3ø	12.1	12.1
TOTAL KVA AT / ø	10.1	10.1

SBR CONTROL PANEL LOAD CALCULATION SUMMARY

LOAD DESCRIPTION	LOAD Aø	LOAD Bø	STANDBY
SBR INFLUENT VALVE NO. 1 PV–05120 (1/2HP)	9.8		9.8
SBR INFLUENT VALVE NO. 2 PV–05122 (1/2HP)		9.8	9.8
DECANT MOTOR NO. 1 M–05111 (1/2HP)	9.8		9.8
DECANT MOTOR NO. 2 M–05113 (1/2HP)		9.8	9.8
SBR AIR VALVE #1 (1/2 HP)	9.8		9.8
SBR AIR VALVE #2 (1/2 HP)		9.8	9.8
CONTROL	2.0		2.0
25% OF THE LARGEST MOTOR	**2.5**		**2.5**
TOTAL AMPS / 120V 1ø	33.9	29.4	33.9
TOTAL KVA AT / ø	4.1	3.5	4.1

PANEL NAME: L1			120/240V, 1ø, 3W				60A MAIN BKR		
LOCATION: SEE SITE PLAN			TYPE: PLUG–IN				PEDESTAL MTD., NEMA 4X		
CKT NO.	BKR SIZE	DESCRIPTION	LOAD	Aø	Bø	LOAD	DESCRIPTION	BKR SIZE	CKT NO.
1	20/	OVERFLOW LIFT PUMP MOTOR CONTROL PANEL	1200	1200		0	SPARE	20/1	2
3	/2		1200		1200	0	SPARE	20/1	4
5	20/1	SPARE	0	0		0	SPARE	20/1	6
CODE TOTAL VA/ø				1200	1200	*INDICATES LOAD @ 125%			
CODE TOTAL AMPS/ø				10.0	10.0	22,000 AIC BREAKERS			

PANEL NAME: L2			120/240V, 1ø, 3W				200A MAIN BKR		
LOCATION: BUILDING			TYPE: PLUG–IN				WALL MTD., NEMA 4X		
CKT NO.	BKR SIZE	DESCRIPTION	LOAD	Aø	Bø	LOAD	DESCRIPTION	BKR SIZE	CKT NO.
1	20/1	*BUILDING EXTERIOR LIGHTS	235	435		200	FLOW METER	20/1	2
3	20/1	*LAB LIGHTS + BLOWER ROOM + EM LIGHT	963		5031	4068	SBR CONTROL PANEL	45/	4
5	20/1	BLOWER ROOM + EXTERIOR RECEPTACLE	900	4428		3528		/2	6
7	20/1	*RESTROOM LIGHTS + EXHAUST FAN + RECEPTACLE	420		1620	1200	GENERATOR ON BOARD PANEL	60/	8
9	20/1	LAB RECEPTACLES 3	1080	2280		1200		/2	10
11	20/1	LAB RECEPTACLES 4	1440		7940	6500	LAB TANKLESS WATER HEATER	60/	12
13	20/	*SBR AREA LIGHTING*	302	6802		6500		/2	14
15	/2		302		6802	6500	RR TANKLESS WATER HEATER	60/	16
17	20/	A/C UNIT OUTDOOR	1759	8259		6500		/2	18
19	/2		1759		1759	0	BUSSED SPACE		20
21	20/1	A/C UNIT INDOOR	600	600		0	BUSSED SPACE		22
23		BUSSED SPACE	0		0	0	BUSSED SPACE		24
25		BUSSED SPACE	0	0		0	BUSSED SPACE		26
27		BUSSED SPACE	0		0	0	BUSSED SPACE		28
29		BUSSED SPACE	0	0		0	BUSSED SPACE		30
31		BUSSED SPACE	0		0	0	BUSSED SPACE		32
33		BUSSED SPACE	0	0		0	BUSSED SPACE		34
35		BUSSED SPACE	0		0	0	BUSSED SPACE		36
37		BUSSED SPACE	0	0		0	BUSSED SPACE		38
39		BUSSED SPACE	0		0	0	BUSSED SPACE		40
41		BUSSED SPACE	0	0		0	BUSSED SPACE		42
CODE TOTAL VA/ø				22804	23152	*INDICATES LOAD @ 125%			
CODE TOTAL AMPS/ø				190.0	192.9	22,000 AIC BREAKERS			

WRIGHT engineering corporation
ELECTRICAL ENGINEERING AND DESIGN
165 EAST CHILTON DRIVE
CHANDLER, ARIZONA 85225
PHONE: 480.497.5829
FAX: 480.497.5807
www.wrightengineering.us

Wright Project # 23319

CALL TWO WORKING DAYS BEFORE YOU DIG
602-263-1100
1-800-STAKE-IT
(OUTSIDE MARICOPA COUNTY)

NO	BY	DATE	REVISIONS	DATE	APP.

Registered Professional Engineer (Electrical) Certificate No. 73954 JAMES BILLEDT 3-31-27 Expires 9-30-27

PREPARED BY: WRIGHT ENGINEERING
DESIGNED BY: JHB
DRAWN BY: XAG
CHECKED BY: JHB
SCALE: AS NOTED
DATE: NOV 2025
JOB NO. B614

THESE DRAWINGS ARE THE PROPERTY OF P.A.C.E. AND SHALL NOT BE REPRODUCED IN ANY MANNER NOR BE USED FOR CONSTRUCTION UNLESS STAMPED "ISSUED FOR CONSTRUCTION".

TITLE
ELECTRICAL
LOAD CALCULATIONS

JOB
TOWN OF JEROME
WASTEWATER
TREATMENT PLANT
YAVAPAI CO. AZ

ISSUED FOR BID

PREPARED BY:

PACE
Advanced Water Engineering
8723 E. VIA de COMMERCIO, 1ST FLR. SCOTTSDALE, CA 85258
P: (480) 991-3595 | www.pacewater.com

SHEET
E2.3
75 OF 99 SHEETS

JOB NO. B614

N:\2025\2025-Pace\Jerome WWTP\2025 Elec Eng\ - Title E2.3 - by pseals on 11/05/25 at 9:46 PM

CONDUIT AND WIRE SCHEDULE FOR POWER

CONDUIT NO.	CONDUIT SIZE	WIRE POWER	WIRE GROUND	FROM	TO	REMARKS
POWER COMPANY						
P000	PER POWER COMPANY (APS) PLANS AND SPECIFICATIONS			POWER COMPANY TRANSFORMER	SES	
MAIN POWER						
P100	(2) 3.5"	4-#350KCMIL (2) PARALLEL	1-#3/0 (2) PARALLEL	SES	AUTOMATIC TRANSFER SWITCH	(2) PARALLEL CONDUCTORS TOTAL DISTANCE 1085'
P101	(2)3"	4-#3/0 (2) PARALLEL	1-#2 (2) PARALLEL	GENERATOR	AUTOMATIC TRANSFER SWITCH	(2) PARALLEL CONDUCTORS
P102	(2)3"	4-#3/0 (2) PARALLEL	1-#2 (2) PARALLEL	AUTOMATIC TRANSFER SWITCH	DSP-1	(2) PARALLEL CONDUCTORS
P103	1"	3-#10	1-#10	PANEL 'L2'	GENERATOR'S ON-BOARD PANEL	
P104	1.5"	2-#2	1-#8	DISTRIBUTION PANEL DSP-1	50KVA TRANSFORMER T2	
P105	2"	3-#3/0	1-#6	50KVA TRANSFORMER T2	PANEL 'L2'	
P120	1"	3-#6	1-#10	PANEL 'L2'	SBR PANEL	
P121	1"	2-#12	1-#12	PANEL 'L2'	AREA LIGHT	CKT. L2-7
P122	1"	2-#12	1-#12	PANEL 'L2'	BUILDING MISC.	SEE SITE FOR CKT.
P123	1"	2-#12	1-#12	PANEL 'L2'	SITE RECEPTACLE	CKT. L2-9
P131	1"	PULL ROPE		SEE SITE PLAN		SPARE
P132	2"	PULL ROPE		SEE SITE PLAN		SPARE
P133	3.5"	PULL ROPE		SEE SITE PLAN		SPARE
HEADWORKS STATION						
P200	1"	3-#10	1-#10	DISTRIBUTION PANEL DSP-1	HEADWORKS CONTROL PANEL	
P201	1"	3-#12	1-#12	HEADWORKS STATION CONTROL PANEL	INFLUENT COARSE SCREEN	M-03010A
P202	1"	3-#12	1-#12	HEADWORKS STATION CONTROL PANEL	INFLUENT COARSE SCREEN	M-03010B
P203	1"	3-#12	1-#12	HEADWORKS STATION CONTROL PANEL	INFLUENT COARSE SCREEN CONVEYOR	M-03010C
P204	1"	2-#12	1-#12	HEADWORKS STATION CONTROL PANEL	SOLENOID VALVE	V-02020

CONDUIT AND WIRE SCHEDULE FOR POWER

CONDUIT NO.	CONDUIT SIZE	WIRE POWER	WIRE GROUND	FROM	TO	REMARKS
SEQUENCING BATCH REACTOR						
P300	1"	3-#10	1-#10	DISTRIBUTION PANEL DSP-1	MCP#1	
P301A	1"	3-#12	1-#12	MCP#1	J-BOX P1	MXR-05110
		3-#12	1-#12			PMP-05100
		3-#12	1-#12			BFV-05121
P301B	1"	2-#12	1-#12	SBR CONTROL PANEL		M-05111
		2-#12	1-#12			PV-05120
		2-#12	1-#12			SBR AIR VALVE #1
P302	1"	3-#12	1-#12	J-BOX P1	SBR MIXER #1	MXR-05110
P303	1"	3-#12	1-#12		WAS TRANSFER PUMP #1	PMP-05100
P322	1"	3-#12	1-#12		DECANTER VALVE #1	BFV-05121
P311	1"	2-#12	1-#12		DECANTER #1	M-05111
P312	1"	2-#12	1-#12		SBR INFLUENT VALVE #1	PV-05120
P317	1"	2-#12	1-#12		SBR AIR VALVE #1	
P350	1"	3-#12	1-#12	DISTRIBUTION PANEL DSP-1	MCP#2	
P351A	1"	3-#12	1-#12	MCP#2	J-BOX P2	MXR-05112
		3-#12	1-#12			PMP-05101
		3-#12	1-#12			BFV-05123
P351B	1"	2-#12	1-#12	SBR CONTROL PANEL		M-05113
		2-#12	1-#12			PV-05122
		2-#12	1-#12			SBR AIR VALVE #2
P352	1"	3-#12	1-#12	J-BOX P2	SBR MIXER #2	MXR-05112
P353	1"	3-#12	1-#12		WAS TRANSFER PUMP #2	PMP-05101
P372	1"	3-#12	1-#12		DECANTER VALVE #2	BFV-05123
P361	1"	2-#12	1-#12		DECANTER #2	M-05113
P362	1"	2-#12	1-#12		SBR INFLUENT VALVE #2	PV-05122
P367	1"	2-#12	1-#12		SBR AIR VALVE #2	

CONDUIT AND WIRE SCHEDULE FOR POWER

CONDUIT NO.	CONDUIT SIZE	WIRE POWER	WIRE GROUND	FROM	TO	REMARKS
CHLORINE CONTACT AND DIGESTER						
P400	3"	2-#12	1-#12	PANEL 'L2'	FLOW METER	FM-06240
P401	3"	2-#12	1-#12	DISTRIBUTION PANEL DSP-1	BUTTERFLY VALVE	BFV-06221
BLOWER ROOM						
P501	1"	3-#8	1-#8	DISTRIBUTION PANEL DSP-1	AERATION BLOWER VFD #1	BLR-04310
P511	1"	3-#8	1-#8	AERATION BLOWER VFD #1	BLR-04310	
P502	1"	3-#8	1-#8	DISTRIBUTION PANEL DSP-1	AERATION BLOWER VFD #2	BLR-04311
P512	1"	3-#8	1-#8	AERATION BLOWER VFD #2	BLR-04311	
P503	1"	3-#8	1-#8	DISTRIBUTION PANEL DSP-1	AERATION BLOWER VFD #3	BLR-04312
P513	1"	3-#8	1-#8	AERATION BLOWER VFD #3	BLR-04312	
P504	1"	3-#12	1-#12	DISTRIBUTION PANEL DSP-1	DIGESTION BLOWER VFD #4	BLR-04313
P514	1"	3-#12	1-#12	DIGESTION BLOWER VFD #4	BLR-04313	
DEWATERING						
P600	1"	3-#10	1-#10	DISTRIBUTION PANEL DSP-1	SLUDGE BAGGING SYSTEM CONTROL PANEL	
P601	1"	3-#12	1-#12	SLUDGE BAGGING SYSTEM CONTROL PANEL	DEWATERING FEED PUMP	PMP-08400
P602	1"	3-#12	1-#12	SLUDGE BAGGING SYSTEM CONTROL PANEL	DRY POLYMER MIXING UNIT	MXR-08410
P603	1"	2-#12	1-#12	SLUDGE BAGGING SYSTEM CONTROL PANEL	POTABLE WATER VALVE	V-02420
P604	1"	2-#12	1-#12	SLUDGE BAGGING SYSTEM CONTROL PANEL	POLYMER PUMP	PMP-08401
DRYING BED LIFT STATION						
P700	2"	3-#8	1-#8	DISTRIBUTION PANEL DSP-1	DRYING BED LIFT STATION CONTROL PANEL	TOTAL DISTANCE 225'
P701	1"	3-#12	1-#12	DRYING BED LIFT STATION CONTROL PANEL	DRYING BED LIFT PUMP	PMP-07400A
P702	1"	3-#12	1-#12	DRYING BED LIFT STATION CONTROL PANEL	DRYING BED LIFT PUMP	PMP-07400B
P703	1"	3-#12	1-#12	DRYING BED LIFT STATION CONTROL PANEL	RECEPTACLE & AREA LIGHT	
OVERFLOW LIFT STATION						
P800	1"	2-#10	1-#10	SES	PANEL 'L1'	
P801	1"	2-#12	1-#12	PANEL 'L1'	OVERFLOW CONTROL PANEL	
P802	1"	2-#12	1-#12	OVERFLOW CONTROL PANEL	OVERFLOW PUMP	PMP-07401

NO	BY	DATE	REVISIONS	DATE	APP.

Registered Professional Engineer (Electrical) Certificate No. 73954 JAMES RILEY TOOT Date Signed 9-30-25 Expires 9-30-27

PREPARED BY: WRIGHT ENGINEERING
DESIGNED BY: JHB
DRAWN BY: XAG
CHECKED BY: JHB
SCALE: AS NOTED
DATE: NOV 2025
JOB NO.: B614

THESE DRAWINGS ARE THE PROPERTY OF P.A.C.E. AND SHALL NOT BE REPRODUCED IN ANY MANNER NOR BE USED FOR CONSTRUCTION UNLESS STAMPED "ISSUED FOR CONSTRUCTION".

TITLE: ELECTRICAL CONDUIT + WIRE TABLES I

JOB: TOWN OF JEROME WASTEWATER TREATMENT PLANT
YAVAPAI CO. AZ

PREPARED BY:
PACE
Advanced Water Engineering
8723 E. Via de Commercio, Suite 104, Scottsdale, CA 85258
p. (408) 991-3595 | www.pacewater.com

SHEET
E2.4
76 OF 99 SHEETS

JOB NO. B614

ISSUED FOR BID

WRIGHT engineering corporation
ELECTRICAL ENGINEERING AND DESIGN
165 EAST CHILTON DRIVE
CHANDLER, ARIZONA 85225
PHONE: 480.497.5829
FAX: 480.497.5807
www.wrightengineering.us
Wright Project # 23319

CALL TWO WORKING DAYS BEFORE YOU DIG
602-263-1100
1-800-STAKE-IT
(OUTSIDE MARICOPA COUNTY)

H:\2025\23319-Jerome WWTP\25\E2.4.dwg, 11x17, 1:1, by jhubbs on 11/04/25 at 2:56:48 PM

CONDUIT AND WIRE SCHEDULE FOR CONTROL

CONDUIT NO.	CONDUIT SIZE	POWER	GROUND	CONTROL	FROM	TO	REMARKS
GENERATOR/SES							
C101	3/4"		#14	(2)#14	AUTOMATIC TRANSFER SWITCH	GENERATOR	
C102	3/4"		#14	(2)#14	SBR CONTROL PANEL	AUTOMATIC TRANSFER SWITCH	
C103	3/4"		#14	(6)#14	SBR CONTROL PANEL	GENERATOR	
C104	3/4"		#14	(2)#14	GENERATOR	E-STOP	EST-01000
C105	2"	PULL ROPE			SBR CONTROL PANEL	MCC	
C106	1"	PULL ROPE			SEE SITE PLAN		SPARE
HEADWORKS STATION							
C200	3/4"		#14	(2)#14	SBR CONTROL PANEL	HEADWORKS CONTROL PANEL	
C201	3/4"		#14	(2)#14	HEADWORKS CONTROL PANEL	INFLUENT COARSE SCREEN	EST-03010A
C202	3/4"		#14	(2)#14	HEADWORKS CONTROL PANEL	INFLUENT COARSE SCREEN	EST-03010B
C203	3/4"		#14	(2)#14	HEADWORKS CONTROL PANEL	INFLUENT COARSE SCREEN CONVEYOR	EST-03010C
C204	3/4"		#14	(6)#14	HEADWORKS CONTROL PANEL	V-02020	ZSO-03023,ZSC-03023, HS-03023
C205	1.5"			(4) FACTORY CABLE	HEADWORKS CONTROL PANEL	CONDUIT BODY	LE-03031
C206	3/4"			FACTORY CABLE	HEADWORKS CONTROL PANEL	LEVEL SENSOR	LE-03031
C207	3/4"			FACTORY CABLE	HEADWORKS CONTROL PANEL	LEVEL SENSOR	LE-03032
C208	3/4"			FACTORY CABLE	HEADWORKS CONTROL PANEL	LEVEL SENSOR	LE-03033
C209	3/4"			FACTORY CABLE	HEADWORKS CONTROL PANEL	LEVEL SENSOR	LE-03034

TP=TWISTED SHIELDED PAIR

CONDUIT AND WIRE SCHEDULE FOR CONTROL

CONDUIT NO.	CONDUIT SIZE	POWER	GROUND	CONTROL	FROM	TO	REMARKS
SEQUENCING BATCH REACTOR							
C300	1"		#14	(6)#14	SBR CONTROL PANEL	MCP#1	MXR-05110
				(6)#14			PMP-05100
C350	1"		#14	(6)#14		MCP#2	MXR-05112
				(6)#14			PMP-05101
C301	1"		#14	(4)#14	MCP#1	J-BOX C1	ME & TE-05110
				(4)#14			ME & TE-05100
C351	1"		#14	(4)#14	MCP#2	J-BOX C2	ME & TE-05112
				(4)#14			ME & TE-05101
C302	1"			FACTORY CABLE	J-BOX C1	MXR-05110	ME & TE-05110
C303	1"			FACTORY CABLE		PMP-05100	ME & TE-05100
C352	1"			FACTORY CABLE	J-BOX C2	MXR-05112	ME & TE-05112
C353	1"			FACTORY CABLE		PMP-05101	ME & TE-05101
C310	1.5"		#14	(8)#14	SBR CONTROL PANEL	J-BOX C1	M-05111
				(8)#14			PV-05120
				(2)#14			LSH-05131A
				(2)#14			LSL-05131B
				(4)#14			SBR AIR VALVE #1
C360	1.5"		#14	(8)#14		J-BOX C2	M-05113
				(8)#14			PV-05122
				(2)#14			LSH-05133A
				(2)#14			LSL-05133B
				(4)#14			SBR AIR VALVE #2
C311	1"			FACTORY CABLE	J-BOX C1	DECANTER #1	M-05111
C312	1"			(8)#14		SBR INFLUENT VALVE #1	PV-05120
C313				FACTORY CABLE		HIGH LEVEL FLOAT #3	LSH-05231
C314	1"			(2) FACTORY CABLE		CONDUIT BODY 1	LSH-05131A, LSH-05131B
C315	3/4"			FACTORY CABLE	CONDUIT BODY 1	HIGH LEVEL FLOAT #1	LSH-05131A
C316	3/4"			FACTORY CABLE		LOW LEVEL FLOAT #1	LSL-05131B
C317	3/4"			(4)#14	J-BOX C1	SBR AIR VALVE #1	
C361	1"			FACTORY CABLE	J-BOX C2	DECANTER #2	M-05113
C362	1"			(8)#14		SBR INFLUENT VALVE #2	PV-05122
C363				FACTORY CABLE		HIGH LEVEL FLOAT #4	LSH-05233
C364	1"			(2) FACTORY CABLE		CONDUIT BODY 2	LSH-05133A, LSH-05133B
C365	3/4"			FACTORY CABLE	CONDUIT BODY 2	HIGH LEVEL FLOAT #2	LSH-05133A
C366	3/4"			FACTORY CABLE		LOW LEVEL FLOAT #2	LSL-05133B
C367	3/4"			(4)#14	J-BOX C2	SBR AIR VALVE #2	
C320	1"			#16 TP	SBR CONTROL PANEL	J-BOX C1	LE-05130
				#16 TP			BFV-05121
				#16 TP			LE-05230
				#16 TP			AT-05160A
C370	1"			#16 TP	SBR CONTROL PANEL	J-BOX C2	LE-05132
				#16 TP			BFV-05123
				#16 TP			LE-05232
				#16 TP			AT-05161A
C321	3/4"			FACTORY CABLE	J-BOX C1	LEVEL SENSOR #1	LE-05130
C322	3/4"			#16 TP		DECANTER VALVE	BFV-05121
C323				FACTORY CABLE		LEVEL SENSOR #3	LE-05230
C324	3/4"			#16 TP		D.O. ANALYZER	AT-05160A
C325				FACTORY CABLE	D.O. ANALYZER	D.O. SENSOR	AE-05160B
C371	3/4"			FACTORY CABLE	J-BOX C2	LEVEL SENSOR #2	LE-05132
C372	3/4"			#16 TP		DECANTER VALVE	BFV-05123
C373				FACTORY CABLE		LEVEL SENSOR #4	LE-05232
C374	3/4"			#16 TP		D.O. ANALYZER	AT-05161A
C375				FACTORY CABLE	D.O. ANALYZER	D.O. SENSOR	AE-05161B

TP=TWISTED SHIELDED PAIR

CONDUIT AND WIRE SCHEDULE FOR CONTROL

CONDUIT NO.	CONDUIT SIZE	POWER	GROUND	CONTROL	FROM	TO	REMARKS
CHLORINE CONTACT							
C400	3/4"			#16TP	SBR CONTROL PANEL	FLOW METER	FM-06240 CHLORINE CONTACT
C401	1"			(2)#16TP	SBR CONTROL PANEL	V-02420	ZSO-06221, ZSC-06221, HS-06221 CHLORINE CONTACT
BLOWER ROOM							
C501			#14	(4)#14, (2)#16TP, CAT6	SBR CONTROL PANEL	BLOWER VFD BLR-04310	
C502			#14	(4)#14, (2)#16TP, CAT6		BLOWER VFD BLR-04311	
C503			#14	(4)#14, (2)#16TP, CAT6		BLOWER VFD BLR-04312	
C504			#14	(4)#14, (2)#16TP, CAT6		BLOWER VFD BLR-04313	
C511	3/4"		#14	(2)#14	BLOWER VFD BLR-04310	MOTOR RTD	TS-04310
C512	3/4"		#14	(2)#14	BLOWER VFD BLR-04311	MOTOR RTD	TS-04311
C513	3/4"		#14	(2)#14	BLOWER VFD BLR-04312	MOTOR RTD	TS-04312
C514	3/4"		#14	(2)#14	BLOWER VFD BLR-04313	MOTOR RTD	TS-04313
C520	1"		#14	(16)#14	SBR CONTROL PANEL	J-BOX	TT-04310, TT-04311, TT-04312, TT-04313
C530	1"			(4)#16TP			PT-04310, PT-04311, PT-04312, PT-04313
C521	3/4"		#14	(2)#14	J-BOX	THERMOSTAT AIR LINE BLOWER BLR-04310	TT-04310
C522	3/4"		#14	(2)#14		THERMOSTAT AIR LINE BLOWER BLR-04311	TT-04311
C523	3/4"		#14	(2)#14		THERMOSTAT AIR LINE BLOWER BLR-04312	TT-04312
C524	3/4"		#14	(2)#14		THERMOSTAT AIR LINE BLOWER BLR-04313	TT-04313
C531	3/4"			#16TP	J-BOX	PRESSURE TRANSDUCER AIR LINE BLOWER BLR-04310	PT-04310, PT-04311, PT-04312, PT-04313
C532	3/4"			#16TP		PRESSURE TRANSDUCER AIR LINE BLOWER BLR-04311	PT-04310, PT-04311, PT-04312, PT-04313
C533	3/4"			#16TP		PRESSURE TRANSDUCER AIR LINE BLOWER BLR-04312	PT-04310, PT-04311, PT-04312, PT-04313
C534	3/4"			#16TP		PRESSURE TRANSDUCER AIR LINE BLOWER BLR-04313	PT-04310, PT-04311, PT-04312, PT-04313
DEWATERING							
C600	1"		#14	(4)#14	SBR CONTROL PANEL	SLUDGE BAGGING SYSTEM CONTROL PANEL	
C601	3/4"		#14	(2)#14	SLUDGE BAGGING SYSTEM CONTROL PANEL	DEWATERING PUMP	PMP-08400, VERIFY CABLE TYPE WITH VENDOR
C602	3/4"		#14	(2)#14	SLUDGE BAGGING SYSTEM CONTROL PANEL	DRY POLYMER MIXING UNIT	MXR-08410, VERIFY CABLE TYPE WITH VENDOR
C603	3/4"		#14	(2)#14	SLUDGE BAGGING SYSTEM CONTROL PANEL	INFLUENT PLUG VALVE	V-02420, VERIFY CABLE TYPE WITH VENDOR
C604	3/4"		#14	(2)#14	SLUDGE BAGGING SYSTEM CONTROL PANEL	POLYMER PUMP	PMP-08401, VERIFY CABLE TYPE WITH VENDOR
DRYING BED LIFT STATION							
C700	1"		#14	(4)#14	SBR CONTROL PANEL	DRYING BED LIFT STATION CONTROL PANEL	
C701	1"		FACTORY CABLE		DRYING BED LIFT STATION CONTROL PANEL	PMP-07400A	
C702	1"		FACTORY CABLE		DRYING BED LIFT STATION CONTROL PANEL	PMP-07400B	
C706	1"		(3) FACTORY CABLE		DRYING BED LIFT STATION CONTROL PANEL	LEVEL FLOATS	LSHH-07430A, LSH-07430B, LSL-07430C
OVERFLOW LIFT STATION							
C801	1"		#14	(4)#14	SBR CONTROL PANEL	DRYING BED LIFT STATION CONTROL PANEL	
C802	1"		FACTORY CABLE		DRYING BED LIFT STATION CONTROL PANEL	PMP-07401	
C803	1"		(2) FACTORY CABLE		DRYING BED LIFT STATION CONTROL PANEL	LEVEL FLOATS	LSHH-07431A, LSL-07431B

TP=TWISTED SHIELDED PAIR

NO	BY	DATE	REVISIONS	DATE	APP.

Registered Professional Engineer (Electrical) Certificate No. 73954 JASON BILLEDEAU 09-30-27 Expires 9-30-27

PREPARED BY: WRIGHT ENGINEERING
DESIGNED BY: JHB
DRAWN BY: XAG
CHECKED BY: JHB
SCALE: AS NOTED
DATE: NOV 2025
JOB NO.: B614

THESE DRAWINGS ARE THE PROPERTY OF P.A.C.E. AND SHALL NOT BE REPRODUCED IN ANY MANNER NOR BE USED FOR CONSTRUCTION UNLESS STAMPED "ISSUED FOR CONSTRUCTION".

TITLE: ELECTRICAL CONDUIT + WIRE TABLES II

JOB: TOWN OF JEROME WASTEWATER TREATMENT PLANT YAVAPAI CO. AZ

ISSUED FOR BID

PREPARED BY:
PACE
Advanced Water Engineering
8723 E. VIA de VENTURA, SUITE 230 | SCOTTSDALE, CA 85258
P: (480) 991-3995 | www.pacewater.com

WRIGHT engineering corporation
ELECTRICAL ENGINEERING AND DESIGN
165 EAST CHILTON DRIVE
CHANDLER, ARIZONA 85225
PHONE: 480.497.5829
FAX: 480.497.5807
www.wrightengineering.us
Wright Project # 23319

CALL TWO WORKING DAYS BEFORE YOU DIG
602-263-1100
1-800-STAKE-IT
(OUTSIDE MARICOPA COUNTY)

SHEET E2.5
77 OF 99 SHEETS

JOB NO. B614

C:\2025\Projects\Jerome WWTP\23319 E Dwg Tabs E2.5 Hyperlink.dwt 11/14/25 4:08:40 PM

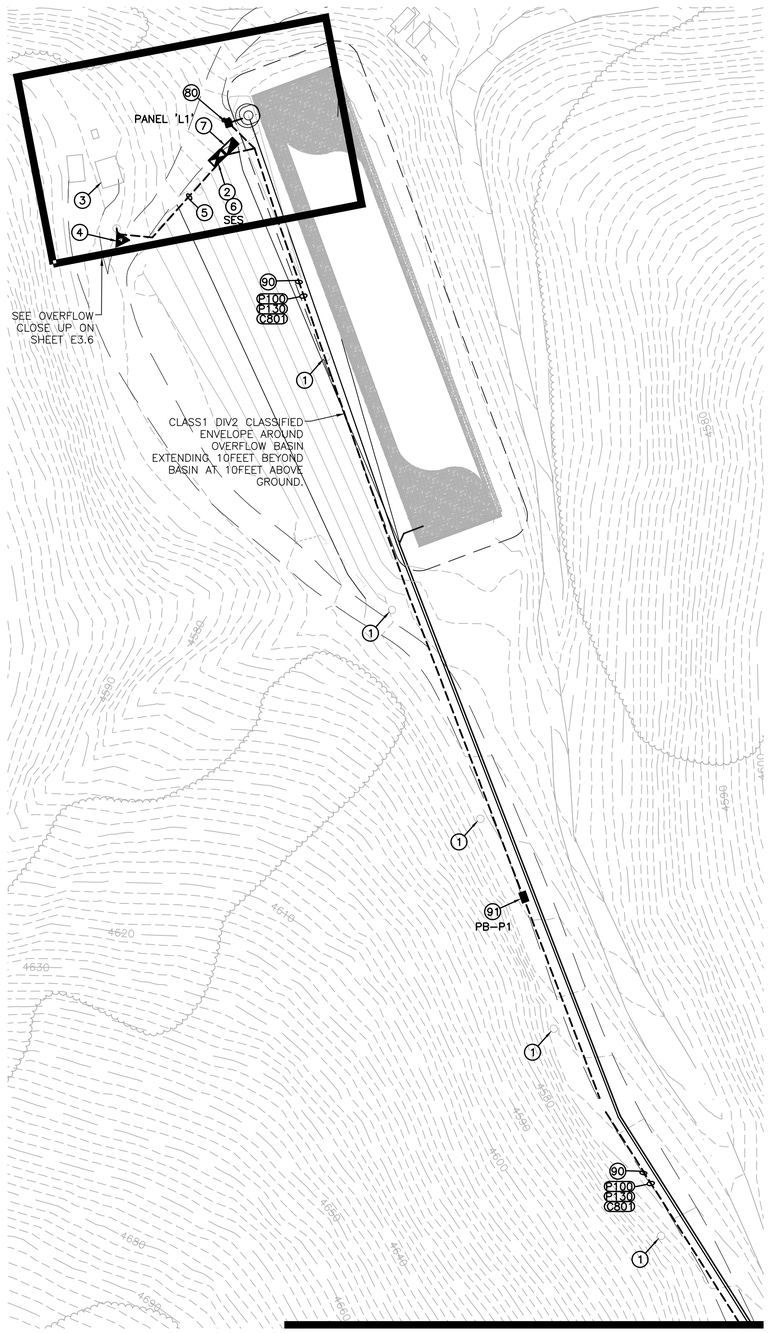

MATCHLINE 'A' SEE ABOVE RIGHT

MATCHLINE 'A' BELOW LEFT

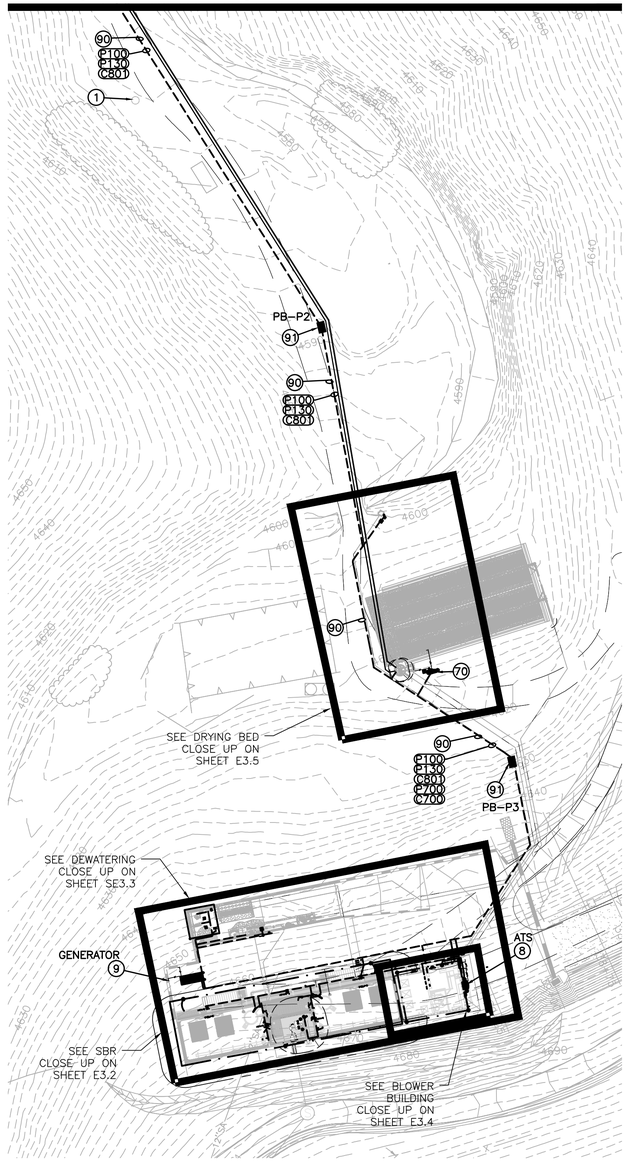

CONSTRUCTION NOTES

1. REMOVE ALL EXISTING CUSTOMER OWNED OVERHEAD ELECTRICAL AND POWER POLE AND DISPOSE OF PROPERLY. COORDINATE WITH OWNER FOR SCHEDULING.
2. REMOVE EXISTING SES AND PANEL AND DISPOSE OF PROPERLY. COORDINATE DISCONNECTION OF THE METER AND SECONDARY CONDUCTORS WITH APS
3. DE-ENERGIZE EXISTING LAB BUILDING UPON COMPLETION OF CONSTRUCTION OF THE NEW LAB. REMOVE ALL EXISTING CONDUCTORS AND ELECTRICAL EQUIPMENT AND DISPOSE OF PROPERLY. COORDINATE ALL WORK WITH OWNER AND POWER COMPANY PRIOR TO DE-ENERGIZATION.
4. COORDINATE WITH APS TO REPLACE THE EXISTING POLE MOUNTED SINGLE PHASE TRANSFORMER. APS TO INSTALL THREE PHASE TRANSFORMERS. CONTRACTOR SHALL VERIFY LOCATION OF NEW TRANSFORMER WITH APS. APS PLANS WILL DETERMINE EXACT LOCATION AND TAKE PRECEDENCE OVER THESE DRAWINGS. COORDINATE ALL WORK WITH APS.
5. APS SERVICE LINE. TRENCH AND INSTALL CONDUIT PER APS SPECIFICATIONS. POWER COMPANY PLANS WILL DETERMINE EXACT LOCATION OF CONDUIT AND TAKE PRECEDENCE OVER THESE DRAWINGS.
6. SES, 400 AMP, 277/480V, 3ø, 4W, SEE DETAIL 1 ON E4.1.
7. MINI-POWER ZONE AND PANELBOARD. SEE DETAIL 1 ON E4.1.
8. ATS 400A 277/480V, 3ø, 4W, SEE DETAIL 2 ON SHEET E4.1.
9. GENERATOR 125KW, 277/480V, 3ø, 4W, SEE DETAIL 1 ON E4.3.
70. 30A DRYING BED LIFT PUMP CONTROL PANEL, 480V, 3ø, 4W. ELECTRICAL CONTRACTOR SHALL MAKE ALL POWER AND CONTROL CONNECTIONS PER THESE PLANS AND SPECIFICATIONS AND THE MANUFACTURERS REQUIREMENTS. SEE DETAIL 1 ON SHEET E4.4.
80. OVERFLOW LIFT PUMP CONTROL PANEL, BY VENDOR. 240V, 1ø, 3W. ELECTRICAL CONTRACTOR SHALL MAKE ALL POWER AND CONTROL CONNECTIONS PER THESE PLANS AND SPECIFICATIONS AND THE MANUFACTURERS REQUIREMENTS. SEE DETAIL 1 ON SHEET E4.4.
90. JOINT TRENCH WITH WATER LINES. MAINTAIN 24-INCH SEPARATION. SEE DETAIL 3 ON SHEET E4.3.
91. STACKED #7 CONCRETE PULL BOX. INSTALL AS SHOWN OR AS NEEDED IF CONDUIT RUNS WILL EXCEED 360 DEGREE OF BENDS OR THE LENGTH EXCEEDS 400 FEET. INSTALL 1 FOR POWER AND 1 FOR CONTROL. SEE DETAIL 5 ON SHEET E4.3.

LEGEND

- PROPOSED 3ø POWER COMPANY TRANSFORMER
- SES 400A 277/480V 3ø 4W
- TRANSFORMER 480V-120/240V
- PANEL 120/240V 1ø 3W
- CONTROL PANEL
- EYS SEALS, CLASS 1 DIVISION 1
- ELECTRICAL SWITCH
- 120V GFCI RECEPTACLE
- 120V GFCI QUADRUPLEX RECEPTACLE
- ELECTRICAL AND COMMUNICATION PULL BOXES
- NEW PULL BOX
- NON FUSED NEMA 4X DISCONNECT
- UNDERGROUND ELECTRICAL CONDUIT
- ABOVE GROUND ELECTRICAL CONDUIT
- FLEXIBLE METALLIC CONDUIT
- GROUNDING ELECTRODE CONDUCTOR
- GROUND ROD WITH INSPECTION WELL. INSPECTION WELL IS ONLY FOR THE FIRST GROUND ROD CONNECTED TO

PROPOSED SITE PLAN ELECTRICAL

NORTH

GRAPHIC SCALE
30 15 0 15 30 60
1 INCH = 30 FEET

WRIGHT engineering corporation
ELECTRICAL ENGINEERING AND DESIGN
165 EAST CHILTON DRIVE
CHANDLER, ARIZONA 85225
PHONE: 480.497.5829
FAX: 480.497.5807
www.wrightengineering.us
Wright Project # 23319

CALL TWO WORKING DAYS BEFORE YOU DIG
602-263-1100
1-800-STAKE-IT
(OUTSIDE MARICOPA COUNTY)

NO	BY	DATE	REVISIONS	DATE	APP.

Registered Professional Engineer (Electrical)
Certificate No. 73954
JASON BELLEDUNT
Date 6-30-27
Expires 6-30-27

PREPARED BY: WRIGHT ENGINEERING
DESIGNED BY: JHB
DRAWN BY: XAG
CHECKED BY: JHB
SCALE: AS NOTED
DATE: NOV 2025
JOB NO. B614

TITLE
ELECTRICAL
PROPOSED SITE PLAN

JOB
TOWN OF JEROME
WASTEWATER
TREATMENT PLANT
YAVAPAI CO. AZ

ISSUED FOR BID

PREPARED BY:
PACE
Advanced Water Engineering
8723 E. VIA de COMMERCIO, SUITE 1-A, SCOTTSDALE, CA 85258
P: (480) 991-3595 | www.pacewater.com

SHEET
E3.1
78 OF 99 SHEETS
JOB NO. B614

THESE DRAWINGS ARE THE PROPERTY OF P.A.C.E. AND SHALL NOT BE REPRODUCED IN ANY MANNER NOR BE USED FOR CONSTRUCTION UNLESS STAMPED "ISSUED FOR CONSTRUCTION".

M:\2025\2519_Jerome_WWTP\2519.dwg, 11x 17, 1:1 plotted on 11/4/25 at 8:58:48 PM

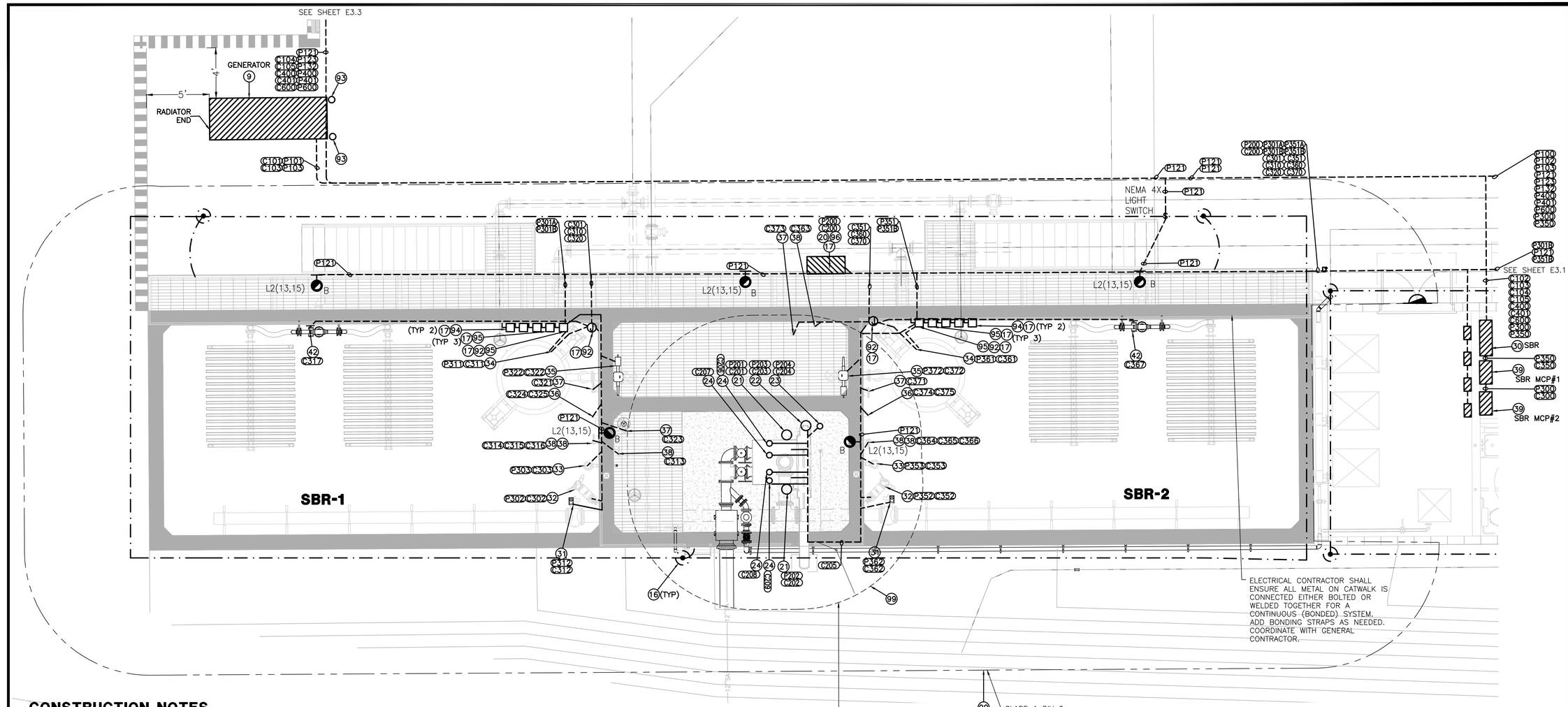

CONSTRUCTION NOTES

(9) GENERATOR 125KW, 277/480V, 3ø, 4W, SEE DETAIL 1 ON E4.3.

(16) LIGHTNING PROTECTION SYSTEM, PER NFPA AND DETAIL 6 ON SHEET E4.6

(17) CLASSIFIED SEAL OFF LISTED FOR CLASS 1 DIV 1. LOCATE WITHIN 10 FEET OF CLASSIFIED AREA BOUNDARY. PVC COATED RMS EYS TYPE OR EQUIVALENT. SEAL SHALL HAVE SEALING COMPOUND CHICO, OR EQUAL.

(20) 20A HEADWORKS CONTROL PANEL, BY VENDOR CLASS 1 DIVISION 2 LISTED. ELECTRICAL CONTRACTOR SHALL MAKE ALL POWER AND CONTROL CONNECTIONS PER THESE PLANS AND SPECIFICATIONS AND THE MANUFACTURERS REQUIREMENTS. SEE DETAIL 1 ON SHEET E4.4.

(21) INFLUENT COARSE SCREEN MOTOR. ELECTRICAL CONTRACTOR SHALL MAKE ALL POWER AND CONTROL CONNECTIONS PER THESE PLANS AND SPECIFICATIONS AND THE MANUFACTURERS REQUIREMENTS.

(22) INFLUENT CONVEYOR MOTOR. ELECTRICAL CONTRACTOR SHALL MAKE ALL POWER AND CONTROL CONNECTIONS PER THESE PLANS AND SPECIFICATIONS AND THE MANUFACTURERS REQUIREMENTS.

(23) POTABLE SOLENOID VALVE AT HEADWORKS. ELECTRICAL CONTRACTOR SHALL MAKE ALL POWER AND CONTROL CONNECTIONS PER THESE PLANS AND SPECIFICATIONS AND THE MANUFACTURERS REQUIREMENTS.

(24) ULTRASONIC LEVEL TRANSDUCER. ELECTRICAL CONTRACTOR SHALL MAKE ALL POWER AND CONTROL CONNECTIONS PER THESE PLANS AND SPECIFICATIONS AND THE MANUFACTURERS REQUIREMENTS.

(30) SBR PANEL BY VENDOR, ELECTRICAL CONTRACTOR SHALL MAKE ALL POWER AND CONTROL CONNECTIONS PER THESE PLANS AND SPECIFICATIONS AND THE MANUFACTURERS REQUIREMENTS.

(31) SBR INFLUENT VALVE. ELECTRICAL CONTRACTOR SHALL MAKE ALL POWER AND CONTROL CONNECTIONS PER THESE PLANS AND SPECIFICATIONS AND THE MANUFACTURERS REQUIREMENTS.

(32) SBR SUBMERSIBLE MIXER. ELECTRICAL CONTRACTOR SHALL MAKE ALL POWER AND CONTROL CONNECTIONS PER THESE PLANS AND SPECIFICATIONS AND THE MANUFACTURERS REQUIREMENTS.

(33) WAS TRANSFER PUMP. ELECTRICAL CONTRACTOR SHALL MAKE ALL POWER AND CONTROL CONNECTIONS PER THESE PLANS AND SPECIFICATIONS AND THE MANUFACTURERS REQUIREMENTS.

(34) DECANT MOTOR. ELECTRICAL CONTRACTOR SHALL MAKE ALL POWER AND CONTROL CONNECTIONS PER THESE PLANS AND SPECIFICATIONS AND THE MANUFACTURERS REQUIREMENTS.

(35) SBR DECANT VALVE. ELECTRICAL CONTRACTOR SHALL MAKE ALL POWER AND CONTROL CONNECTIONS PER THESE PLANS AND SPECIFICATIONS AND THE MANUFACTURERS REQUIREMENTS.

(36) DO TRANSMITTER AND ANALYZER. ELECTRICAL CONTRACTOR SHALL MAKE ALL POWER AND CONTROL CONNECTIONS PER THESE PLANS AND SPECIFICATIONS AND THE MANUFACTURERS REQUIREMENTS.

(37) SUBMERSIBLE PRESSURE TRANSDUCER. ELECTRICAL CONTRACTOR SHALL MAKE ALL POWER AND CONTROL CONNECTIONS PER THESE PLANS AND SPECIFICATIONS AND THE MANUFACTURERS REQUIREMENTS.

(38) LEVEL FLOAT. ELECTRICAL CONTRACTOR SHALL MAKE ALL POWER AND CONTROL CONNECTIONS PER THESE PLANS AND SPECIFICATIONS AND THE MANUFACTURERS REQUIREMENTS.

(39) SBR MOTOR CONTROL PANEL, PROVIDE AND INSTALL. ELECTRICAL CONTRACTOR SHALL MAKE ALL POWER AND CONTROL CONNECTIONS PER THESE PLANS AND SPECIFICATIONS AND THE MANUFACTURERS REQUIREMENTS.

(40) SBR EFFLUENT VALVE. ELECTRICAL CONTRACTOR SHALL MAKE ALL POWER AND CONTROL CONNECTIONS PER THESE PLANS AND SPECIFICATIONS AND THE MANUFACTURERS REQUIREMENTS.

(41) FLOW METER. ELECTRICAL CONTRACTOR SHALL MAKE ALL POWER AND CONTROL CONNECTIONS PER THESE PLANS AND SPECIFICATIONS AND THE MANUFACTURERS REQUIREMENTS.

(42) SBR AIR VALVE. ELECTRICAL CONTRACTOR SHALL MAKE ALL POWER AND CONTROL CONNECTIONS PER THESE PLANS AND SPECIFICATIONS AND THE MANUFACTURERS REQUIREMENTS.

(92) STANCHION MOUNTED NEMA 4X SST JUNCTION BOXES. MAINTAIN 3' CLEARANCE IN FRONT OF EQUIPMENT. EXTRA SLACK SHALL REMAIN IN THE J-BOX FOR FUTURE LEVEL ADJUSTMENT. SEE DETAIL 2 ON SHEET E4.2 AND DETAIL 1 ON SHEET E4.4.

(93) TRAFFIC BOLLARD TO BE INSTALLED PER CIVIL PLANS. LOCATE OUT OF 4 FOOT WORKING SPACE ENVELOPE PER NEC.

(94) NON-FUSED DISCONNECT, NEMA 4X FOR OUTDOOR AND CLASS 1 DIV 1 WITHIN CLASSIFIED BOUNDARY. IF LOCATION IS ABOVE BOUNDARY, NEMA 4X WITH CLASSIFIED SEAL OFFS IS ACCEPTABLE. PROVIDE PERMANENT LABEL SUITABLE FOR CORROSIVE ENVIRONMENTS AND UV RESISTANT. MATCH LABEL NAMING CONVENTION WITH P&ID. SEE DETAIL 5 ON SHEET E4.2 & SEE DETAIL 1 ON SHEET E4.4.

(95) ROTARY TYPE DISCONNECT, NEMA 4X FOR OUTDOOR AND CLASS 1 DIV 1 WITHIN CLASSIFIED BOUNDARY. IF LOCATION IS ABOVE BOUNDARY, NEMA 4X WITH CLASSIFIED SEAL OFFS IS ACCEPTABLE. PROVIDE PERMANENT LABEL SUITABLE FOR CORROSIVE ENVIRONMENTS AND UV RESISTANT. MATCH LABEL NAMING CONVENTION WITH P&ID. SEE DETAIL 5 ON SHEET E4.2 & SEE DETAIL 1 ON SHEET E4.4.

(96) E-STOP, NEMA 4X FOR OUTDOOR AND CLASS 1 DIV 1 WITHIN CLASSIFIED BOUNDARY. IF LOCATION IS ABOVE BOUNDARY, NEMA 4X WITH CLASSIFIED SEAL OFFS IS ACCEPTABLE. PROVIDE PERMANENT LABEL SUITABLE FOR CORROSIVE ENVIRONMENTS AND UV RESISTANT. MATCH LABEL NAMING CONVENTION WITH P&ID. SEE DETAIL 5 ON SHEET E4.2.

CLASS 1 DIV 2
PER NFPA 820
TABLE 5.2.2 SECTION 2C
COARSE FINE SCREEN FACILITIES NOT ENCLOSED, OPEN TO ATMOSPHERE/IF ENCLOSED, THEN THE CLASSIFICATION IS ONLY WITHIN THE TANK.

ENVELOPE: WITHIN A 10 FT AROUND EQUIPMENT AND OPEN CHANNEL

CLASS 1 DIV 2
PER NFPA 820
TABLE 5.2.2 SECTION 7C
PRIMARY SEDIMENTATION TANKS (SBR)
NOT ENCLOSED, OPEN TO ATMOSPHERE.

ENVELOPE: INTERIOR OF THE TANK FROM THE MINIMUM OPERATING WATER SURFACE TO THE TOP OF THE TANK WALL;

ENVELOPE 18 INCHES ABOVE THE TOP OF THE TANK AND EXTENDING 18 INCHES BEYOND THE EXTERIOR WALL;

ENVELOPE 18 INCHES ABOVE GRADE EXTENDING 10 FT HORIZONTALLY FROM THE EXTERIOR TANK WALLS

SBR PLAN ELECTRICAL

(99) CLASSIFIED AREA VERIFY BOUNDARY WITH THE NFPA. INSTALL ANY PANELS, DISCONNECTS, SPLICES, ARC MAKING EQUIPMENT OUT OF THE BOUNDARY, WHERE NOT POSSIBLE THEN INSTALL CLASS 1 DIV 1 LISTED EQUIPMENT. ALL CONDUIT WITHIN BOUNDARY SHALL BE CLASS 1 DIV 1 OR 2 RATED AS REQUIRED BY THE BOUNDARY. USE PVC COATED THREADED RMC CONDUIT, INSTALL STAINLESS STEEL 316 ENCLOSURES, HARDWARE AND EQUIPMENT WITHIN 10 FEET OF THE BOUNDARY. INSTALL CLASSIFIED SEAL OFFS WITHIN 10 FEET OF THE BOUNDARY, AT A PANEL OR JUNCTION BOX IS PREFERRED.

LEGEND

- PROPOSED 3ø POWER COMPANY TRANSFORMER
- SES 400A 277/480V 3ø 4W
- TRANSFORMER 480V–120/240V
- PANEL 120/240V 1ø 3W
- CONTROL PANEL
- EYS SEALS, CLASS 1 DIVISION 1
- ELECTRICAL SWITCH
- 120V GFCI RECEPTACLE
- 120V GFCI QUADRUPLEX RECEPTACLE
- ELECTRICAL AND COMMUNICATION PULL BOXES
- NEW PULL BOX
- NON FUSED NEMA 4X DISCONNECT
- UNDERGROUND ELECTRICAL CONDUIT
- ABOVE GROUND ELECTRICAL CONDUIT
- FLEXIBLE METALLIC CONDUIT
- GROUNDING ELECTRODE CONDUCTOR
- GROUND ROD WITH INSPECTION WELL. INSPECTION WELL IS ONLY FOR THE FIRST GROUND ROD CONNECTED TO

GRAPHIC SCALE
4 2 0 2 4 8
1 INCH = 4 FEET
NORTH

WRIGHT engineering corporation
ELECTRICAL ENGINEERING AND DESIGN
165 EAST CHILTON DRIVE
CHANDLER, ARIZONA 85225
PHONE: 480.497.5829
FAX: 480.497.5807
www.wrightengineering.us
Wright Project # 23319

CALL TWO WORKING DAYS BEFORE YOU DIG
602-263-1100
1-800-STAKE-IT
(OUTSIDE MARICOPA COUNTY)

NO	BY	DATE	REVISIONS	DATE	APP.

Registered Professional Engineer (Electrical) Certificate No. 73954 JAMES RILEY HEDT Date Signed 9-30-25 Expires 9-30-27

PREPARED BY: WRIGHT ENGINEERING
DESIGNED BY: JHB
DRAWN BY: XAG
CHECKED BY: JHB
SCALE: AS NOTED
DATE: NOV 2025
JOB NO. B614

THESE DRAWINGS ARE THE PROPERTY OF P.A.C.E. AND SHALL NOT BE REPRODUCED IN ANY MANNER NOR BE USED FOR CONSTRUCTION UNLESS STAMPED "ISSUED FOR CONSTRUCTION".

TITLE
ELECTRICAL
SBR PLAN

JOB
TOWN OF JEROME
WASTEWATER
TREATMENT PLANT
YAVAPAI CO. AZ

ISSUED FOR BID

PREPARED BY:
PACE
Advanced Water Engineering
Consulting, Design & Construction Services
8723 E. VIA DE VENTURA, SUITE A-140, SCOTTSDALE, AZ 85258
P: (480) 991-3595 | www.pacewater.com

SHEET
E3.2
79 OF 99 SHEETS
JOB NO. B614

X:\2025\25-Dwgs\WTP25115.dwg, Tab: E3.2, by:jessie.an 11/4/25 at 9:05:43 PM

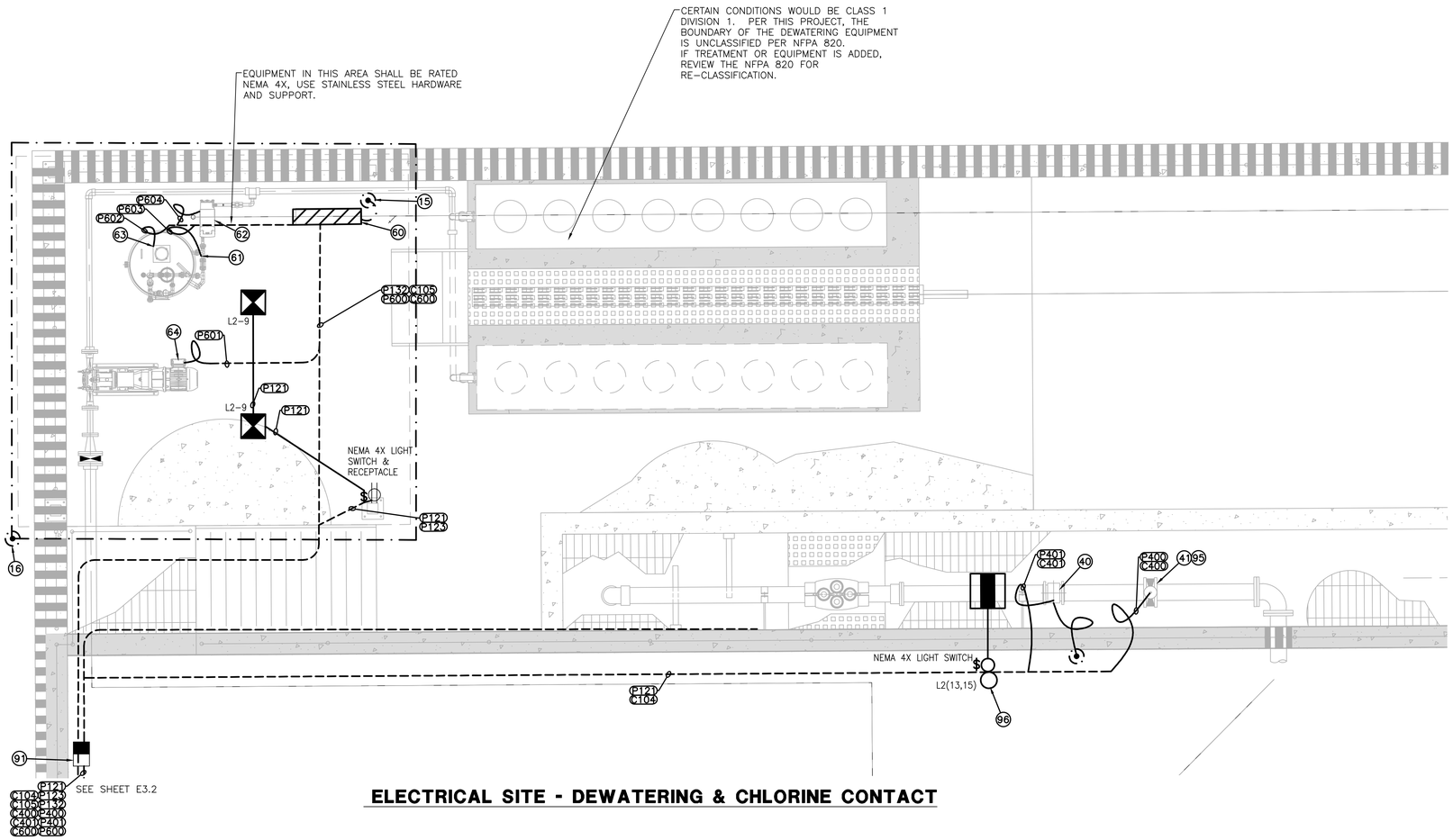

ELECTRICAL SITE - DEWATERING & CHLORINE CONTACT

CONSTRUCTION NOTES

(15) GROUNDING ELECTRODE CONDUCTORS, GROUND ROD, AND INSPECTION WELL FOR ONLY THE FIRST GROUND ROD, PER SINGLE LINE DIAGRAMS AND DETAILS ON SHEET E4.6.

(16) LIGHTNING PROTECTION SYSTEM, PER NFPA AND DETAIL 6 ON SHEET E4.6

(40) SBR EFFLUENT VALVE. ELECTRICAL CONTRACTOR SHALL MAKE ALL POWER AND CONTROL CONNECTIONS PER THESE PLANS AND SPECIFICATIONS AND THE MANUFACTURERS REQUIREMENTS.

(41) FLOW METER. ELECTRICAL CONTRACTOR SHALL MAKE ALL POWER AND CONTROL CONNECTIONS PER THESE PLANS AND SPECIFICATIONS AND THE MANUFACTURERS REQUIREMENTS.

(60) 20A SLUDGE BAGGING SYSTEM CONTROL PANEL, BY VENDOR. ELECTRICAL CONTRACTOR SHALL MAKE ALL POWER AND CONTROL CONNECTIONS PER THESE PLANS AND SPECIFICATIONS AND THE MANUFACTURERS REQUIREMENTS.

(61) POTABLE WATER VALVE. ELECTRICAL CONTRACTOR SHALL MAKE ALL POWER AND CONTROL CONNECTIONS PER THESE PLANS AND SPECIFICATIONS AND THE MANUFACTURERS REQUIREMENTS.

(62) POLYMER METERING PUMP. ELECTRICAL CONTRACTOR SHALL MAKE ALL POWER AND CONTROL CONNECTIONS PER THESE PLANS AND SPECIFICATIONS AND THE MANUFACTURERS REQUIREMENTS.

(63) DRY POLYMER MIXER. ELECTRICAL CONTRACTOR SHALL MAKE ALL POWER AND CONTROL CONNECTIONS PER THESE PLANS AND SPECIFICATIONS AND THE MANUFACTURERS REQUIREMENTS.

(64) DEWATERING FEED PUMP. ELECTRICAL CONTRACTOR SHALL MAKE ALL POWER AND CONTROL CONNECTIONS PER THESE PLANS AND SPECIFICATIONS AND THE MANUFACTURERS REQUIREMENTS.

(91) STACKED #7 CONCRETE PULL BOX. INSTALL AS SHOWN OR AS NEEDED IF CONDUIT RUNS WILL EXCEED 360 DEGREE OF BENDS OR THE LENGTH EXCEEDS 400 FEET. INSTALL 1 FOR POWER AND 1 FOR CONTROL. SEE DETAIL 5 ON SHEET E4.3.

(95) ROTARY TYPE DISCONNECT, NEMA 4X FOR OUTDOOR AND CLASS 1 DIV 1 WITHIN CLASSIFIED BOUNDARY. IF LOCATION IS ABOVE BOUNDARY, NEMA 4X WITH CLASSIFIED SEAL OFFS IS ACCEPTABLE. PROVIDE PERMANENT LABEL SUITABLE FOR CORROSIVE ENVIRONMENTS AND UV RESISTANT. MATCH LABEL NAMING CONVENTION WITH P&ID. SEE DETAIL 5 ON SHEET E4.2 & SEE DETAIL 1 ON SHEET E4.4.

(96) E-STOP, NEMA 4X FOR OUTDOOR AND CLASS 1 DIV 1 WITHIN CLASSIFIED BOUNDARY. IF LOCATION IS ABOVE BOUNDARY, NEMA 4X WITH CLASSIFIED SEAL OFFS IS ACCEPTABLE. PROVIDE PERMANENT LABEL SUITABLE FOR CORROSIVE ENVIRONMENTS AND UV RESISTANT. MATCH LABEL NAMING CONVENTION WITH P&ID. SEE DETAIL 5 ON SHEET E4.2.

LEGEND

- PROPOSED 3ø POWER COMPANY TRANSFORMER
- SES 400A 277/480V 3ø 4W
- TRANSFORMER 480V-120/240V
- PANEL 120/240V 1ø 3W
- CONTROL PANEL
- EYS SEALS, CLASS 1 DIVISION 1
- $ ELECTRICAL SWITCH
- 120V GFCI RECEPTACLE
- 120V GFCI QUADRUPLEX RECEPTACLE
- ELECTRICAL AND COMMUNICATION PULL BOXES
- NEW PULL BOX
- NON FUSED NEMA 4X DISCONNECT
- UNDERGROUND ELECTRICAL CONDUIT
- ABOVE GROUND ELECTRICAL CONDUIT
- FLEXIBLE METALLIC CONDUIT
- GROUNDING ELECTRODE CONDUCTOR
- GROUND ROD WITH INSPECTION WELL. INSPECTION WELL IS ONLY FOR THE FIRST GROUND ROD CONNECTED TO THE GROUNDING ELECTRODE CONDUCTOR.

GRAPHIC SCALE
2 1 0 1 2 4
1 INCH = 2 FEET
NORTH

WRIGHT engineering corporation
ELECTRICAL ENGINEERING AND DESIGN
165 EAST CHILTON DRIVE
CHANDLER, ARIZONA 85225
PHONE: 480.497.5829
FAX: 480.497.5807
www.wrightengineering.us
Wright Project # 23319

CALL TWO WORKING DAYS BEFORE YOU DIG
602-263-1100
1-800-STAKE-IT
(OUTSIDE MARICOPA COUNTY)

ISSUED FOR BID

NO	BY	DATE	REVISIONS	DATE	APP.

Registered Professional Engineer (Electrical) Certificate No. 73954 JAMES BELLEDIT 08-31-27 Expires 8-31-27

PREPARED BY: WRIGHT ENGINEERING
DESIGNED BY: JHB
DRAWN BY: XAG
CHECKED BY: JHB
DATE: NOV 2025
JOB NO.: B614
SCALE: AS NOTED

THESE DRAWINGS ARE THE PROPERTY OF P.A.C.E. AND SHALL NOT BE REPRODUCED IN ANY MANNER NOR BE USED FOR CONSTRUCTION UNLESS STAMPED "ISSUED FOR CONSTRUCTION".

TITLE: ELECTRICAL DEWATERING PAD

JOB: TOWN OF JEROME WASTEWATER TREATMENT PLANT YAVAPAI CO. AZ

PREPARED BY:
PACE
Advanced Water Engineering
8723 E. Via de Commercio, Suite 104, SCOTTSDALE, CA 85258
P: (480) 991-3395 | www.pacewater.com

SHEET E3.3
80 OF 99 SHEETS

JOB NO. B614

I:\JOBS\2019\Jerome WWTP\2019 E Dwg - TAC E3.3 - Dewatering.dwg, 11/26/25 4:58:43 PM

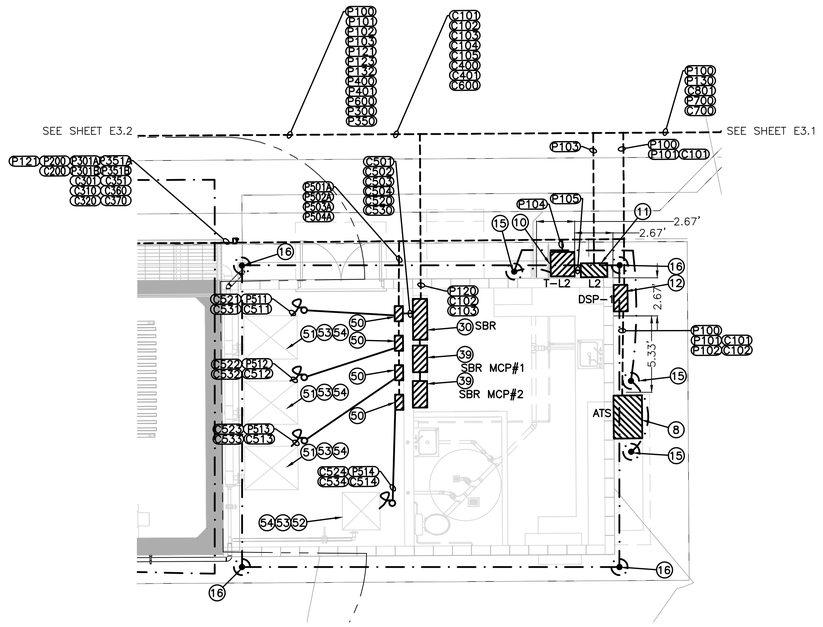

OPS BLOWER ELECTRICAL

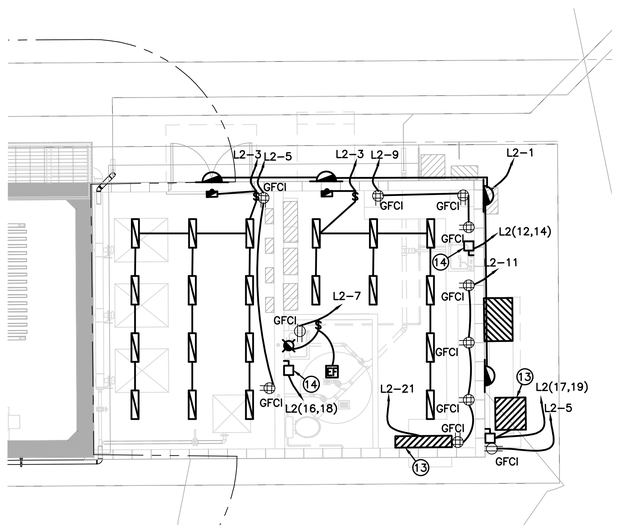

OPS BLOWER LIGHTING & POWER

CONSTRUCTION NOTES

8. ATS 400A 277/480V, 3ø, 4W, SEE DETAIL 2 ON SHEET E4.1.
10. TRANSFORMER 50KVA 480V – 120/240V 1ø, SEE DETAIL 2 ON SHEET E4.1.
11. PANELBOARD, 120/240V, 1ø, 3W, SEE DETAIL 2 ON E4.1.
12. DISTRIBUTION PANEL DSP-1 400A 277/480V, 3ø, 4W, SEE DETAIL 2 ON SHEET E4.1.
13. ELECTRICAL CONTRACTOR SHALL INSTALL POWER FEED TO MINI SPLIT AIR CONDITIONER AND HEAT PUMP & MAKE ALL 240V CONNECTIONS.
14. TANKLESS WATER HEATER & DISCONENCT. ELECTRICAL CONTRACTOR SHALL MAKE ALL POWER AND CONTROL CONNECTIONS PER THESE PLANS AND SPECIFICATIONS AND THE MANUFACTURERS REQUIREMENTS.
15. GROUNDING ELECTRODE CONDUCTORS, GROUND ROD, AND INSPECTION WELL FOR ONLY THE FIRST GROUND ROD, PER SINGLE LINE DIAGRAMS AND DETAILS ON SHEET E4.6.
16. LIGHTNING PROTECTION SYSTEM, PER NFPA AND DETAIL 6 ON SHEET E4.6
30. SBR PANEL BY VENDOR, ELECTRICAL CONTRACTOR SHALL MAKE ALL POWER AND CONTROL CONNECTIONS PER THESE PLANS AND SPECIFICATIONS AND THE MANUFACTURERS REQUIREMENTS.
50. VARIABLE FREQUENCY DRIVE. ELECTRICAL CONTRACTOR SHALL MAKE ALL POWER AND CONTROL CONNECTIONS PER THESE PLANS AND SPECIFICATIONS AND THE MANUFACTURERS REQUIREMENTS.
51. SBR AERATION BLOWER WITH INTEGRAL DISCONNECT. ELECTRICAL CONTRACTOR SHALL MAKE ALL POWER AND CONTROL CONNECTIONS PER THESE PLANS AND SPECIFICATIONS AND THE MANUFACTURERS REQUIREMENTS.
52. DIGESTER AERATION BLOWER WITH INTEGRAL DISCONNECT. ELECTRICAL CONTRACTOR SHALL MAKE ALL POWER AND CONTROL CONNECTIONS PER THESE PLANS AND SPECIFICATIONS AND THE MANUFACTURERS REQUIREMENTS.
53. PRESSURE TRANSDUCER. ELECTRICAL CONTRACTOR SHALL MAKE ALL POWER AND CONTROL CONNECTIONS PER THESE PLANS AND SPECIFICATIONS AND THE MANUFACTURERS REQUIREMENTS.
54. TEMPERATURE TRANSDUCER. ELECTRICAL CONTRACTOR SHALL MAKE ALL POWER AND CONTROL CONNECTIONS PER THESE PLANS AND SPECIFICATIONS AND THE MANUFACTURERS REQUIREMENTS.

LEGEND

- PROPOSED 3ø POWER COMPANY TRANSFORMER
- SES 400A 277/480V 3ø 4W
- TRANSFORMER 480V–120/240V
- PANEL 120/240V 1ø 3W
- CONTROL PANEL
- EYS SEALS, CLASS 1 DIVISION 1
- ELECTRICAL SWITCH
- 120V GFCI RECEPTACLE
- 120V GFCI QUADRUPLEX RECEPTACLE
- ELECTRICAL AND COMMUNICATION PULL BOXES
- NEW PULL BOX
- NON FUSED NEMA 4X DISCONNECT
- UNDERGROUND ELECTRICAL CONDUIT
- ABOVE GROUND ELECTRICAL CONDUIT
- FLEXIBLE METALLIC CONDUIT
- GROUNDING ELECTRODE CONDUCTOR
- GROUND ROD WITH INSPECTION WELL. INSPECTION WELL IS ONLY FOR THE FIRST GROUND ROD CONNECTED TO

GRAPHIC SCALE
5 2.5 0 2.5 5 10
1 INCH = 5 FEET
NORTH

WRIGHT engineering corporation
ELECTRICAL ENGINEERING AND DESIGN
165 EAST CHILTON DRIVE
CHANDLER, ARIZONA 85225
PHONE: 480.497.5829
FAX: 480.497.5807
www.wrightengineering.us
Wright Project # 23319

CALL TWO WORKING DAYS BEFORE YOU DIG
602-263-1100
1-800-STAKE-IT
(OUTSIDE MARICOPA COUNTY)

NO	BY	DATE	REVISIONS	DATE	APP.

Registered Professional Engineer (Electrical) Certificate No. 73954 JAMES RILLETT DAY Date Signed 11-24-25 Expires 9-30-27

PREPARED BY: WRIGHT ENGINEERING
DESIGNED BY: JHB
DRAWN BY: XAG
CHECKED BY: JHB
DATE: NOV 2025
JOB NO.: B614
SCALE: AS NOTED

THESE DRAWINGS ARE THE PROPERTY OF P.A.C.E. AND SHALL NOT BE REPRODUCED IN ANY MANNER NOR BE USED FOR CONSTRUCTION UNLESS STAMPED "ISSUED FOR CONSTRUCTION".

TITLE: ELECTRICAL BLOWER OPS

JOB: TOWN OF JEROME WASTEWATER TREATMENT PLANT YAVAPAI CO. AZ

ISSUED FOR BID

PREPARED BY:
PACE
Advanced Water Engineering
8723 E VIA de VENTURA, SUITE A-200, SCOTTSDALE, CA 85258
P: (480) 991-3955 | www.pacewater.com

SHEET
E3.4
81 OF 99 SHEETS

JOB NO. B614

C:\2025\01b_Jerome WWTP\2025 E Dwg - Tab: E3.4 - by jakob on 11/25/25 at 08:43 PM

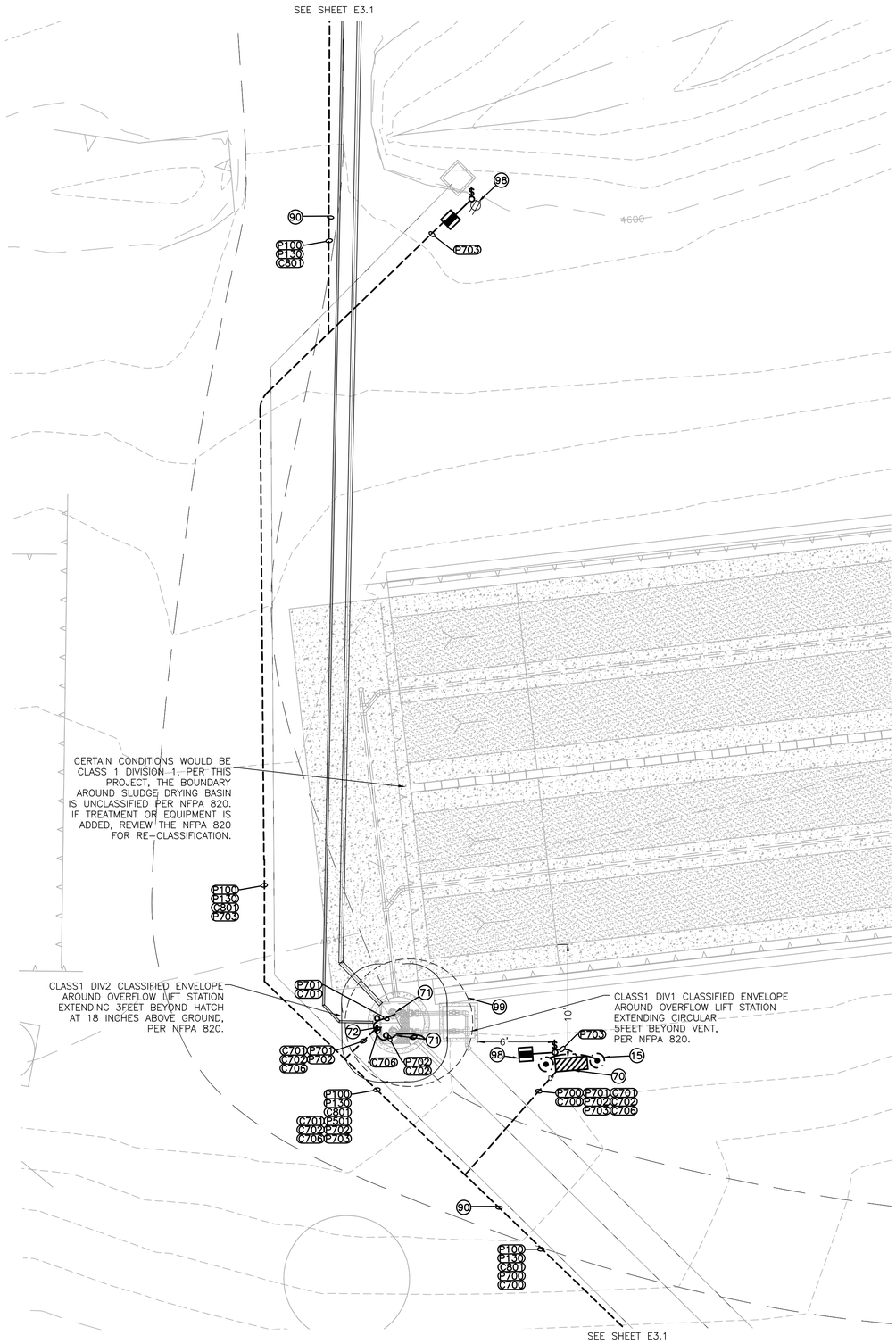

DRYING BED LIFT STATION ELECTRICAL

CONSTRUCTION NOTES

(15) GROUNDING ELECTRODE CONDUCTORS, GROUND ROD, AND INSPECTION WELL FOR ONLY THE FIRST GROUND ROD. PER SINGLE LINE DIAGRAMS AND DETAILS ON SHEET E4.6.

(70) 30A DRYING BED LIFT PUMP CONTROL PANEL, 480V, 3ø, 4W. ELECTRICAL CONTRACTOR SHALL MAKE ALL POWER AND CONTROL CONNECTIONS PER THESE PLANS AND SPECIFICATIONS AND THE MANUFACTURERS REQUIREMENTS. SEE DETAIL 1 ON SHEET E4.4.

(71) DRYING BED LIFT PUMP. ELECTRICAL CONTRACTOR SHALL MAKE ALL POWER AND CONTROL CONNECTIONS PER THESE PLANS AND SPECIFICATIONS AND THE MANUFACTURERS REQUIREMENTS. SEE DETAIL 4 ON SHEET E4.5.

(72) LEVEL FLOAT. ELECTRICAL CONTRACTOR SHALL MAKE ALL POWER AND CONTROL CONNECTIONS PER THESE PLANS AND SPECIFICATIONS AND THE MANUFACTURERS REQUIREMENTS. SEE DETAIL 4 ON SHEET E4.5.

(90) JOINT TRENCH WITH WATER LINES. MAINTAIN 24-INCH SEPARATION. SEE DETAIL 3 ON SHEET E4.3.

(98) 20A 120V GFCI DUPLEX RECEPTACLE WITH METAL WEATHERPROOF WHILE-IN-USE AND LOCKABLE COVER INSTALLED ONTO LIGHT POLE. SEE DETAIL 2 ON SHEET E4.5.

(99) CLASSIFIED AREA VERIFY BOUNDARY WITH THE NFPA. INSTALL ANY PANELS, DISCONNECTS, SPLICES, ARC MAKING EQUIPMENT OUT OF THE BOUNDARY, WHERE NOT POSSIBLE THEN INSTALL CLASS 1 DIV 1 LISTED EQUIPMENT. ALL CONDUIT WITHIN BOUNDARY SHALL BE CLASS 1 DIV 1 OR 2 RATED AS REQUIRED BY THE BOUNDARY. USE PVC COATED THREADED RMC CONDUIT, INSTALL STAINLESS STEEL 316 ENCLOSURES, HARDWARE AND EQUIPMENT WITHIN 10 FEET OF THE BOUNDARY. INSTALL CLASSIFIED SEAL OFFS WITHIN 10 FEET OF THE BOUNDARY, AT A PANEL OR JUNCTION BOX IS PREFERRED.

LEGEND

- PROPOSED 3ø POWER COMPANY TRANSFORMER
- SES 400A 277/480V 3ø 4W
- TRANSFORMER 480V-120/240V
- PANEL 120/240V 1ø 3W
- CONTROL PANEL
- EYS SEALS, CLASS 1 DIVISION 1
- ELECTRICAL SWITCH
- 120V GFCI RECEPTACLE
- 120V GFCI QUADRUPLEX RECEPTACLE
- ELECTRICAL AND COMMUNICATION PULL BOXES
- NEW PULL BOX
- NON FUSED NEMA 4X DISCONNECT
- UNDERGROUND ELECTRICAL CONDUIT
- ABOVE GROUND ELECTRICAL CONDUIT
- FLEXIBLE METALLIC CONDUIT
- GROUNDING ELECTRODE CONDUCTOR
- GROUND ROD WITH INSPECTION WELL. INSPECTION WELL IS ONLY FOR THE FIRST GROUND ROD CONNECTED TO

GRAPHIC SCALE
5 2.5 0 2.5 5 10
1 INCH = 5 FEET
NORTH

WRIGHT engineering corporation
ELECTRICAL ENGINEERING AND DESIGN
165 EAST CHILTON DRIVE
CHANDLER, ARIZONA 85225
PHONE: 480.497.5829
FAX: 480.497.5807
www.wrightengineering.us
Wright Project # 23319

CALL TWO WORKING DAYS BEFORE YOU DIG
602-263-1100
1-800-STAKE-IT
(OUTSIDE MARICOPA COUNTY)

NO	BY	DATE	REVISIONS	DATE	APP.

Registered Professional Engineer (Retired) Certificate No. 73954 JAMES RUSSELL DAVIS Date Signed 9-30-25 Expires 9-30-27

PREPARED BY: WRIGHT ENGINEERING
DESIGNED BY: JHB
DRAWN BY: XAG
CHECKED BY: JHB
SCALE: AS NOTED
DATE: NOV 2025
JOB NO.: B614

THESE DRAWINGS ARE THE PROPERTY OF P.A.C.E. AND SHALL NOT BE REPRODUCED IN ANY MANNER NOR BE USED FOR CONSTRUCTION UNLESS STAMPED "ISSUED FOR CONSTRUCTION".

TITLE
ELECTRICAL
DRYING BED LIFT STATION

JOB
TOWN OF JEROME
WASTEWATER
TREATMENT PLANT
YAVAPAI CO. AZ

ISSUED FOR BID

PREPARED BY:
PACE
Advanced Water Engineering
8723 E. Via de Commercio, Suite 1-104, Scottsdale, CA 85258
P: (480) 991-3595 | www.pacewater.com

SHEET
E3.5
82 OF 99 SHEETS
JOB NO. B614

10/22/2025 by:Jamie WWTP25.dwg, Tab: E3.1, by:jaustin on 10/22/25 at 3:58:49 PM

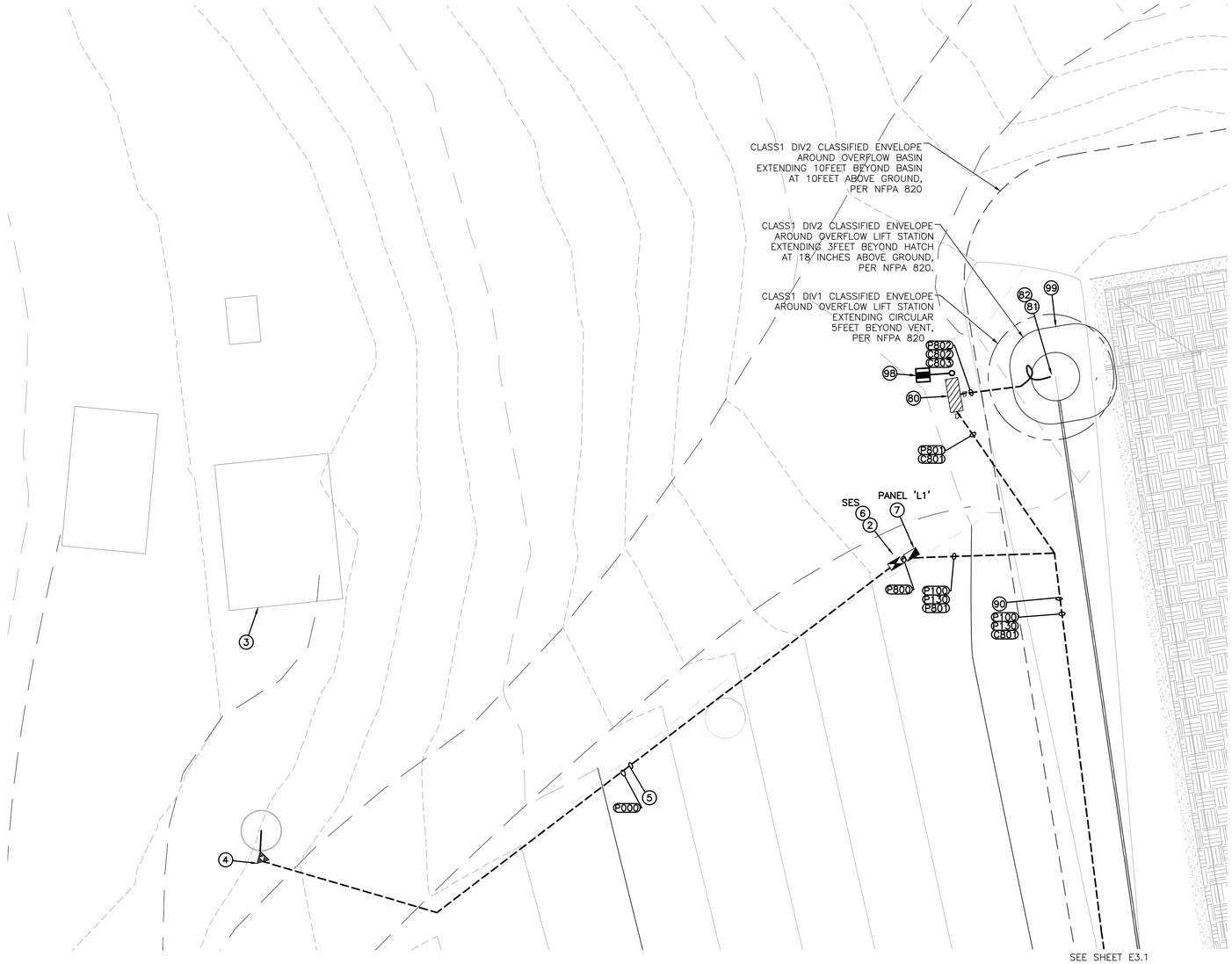

CONSTRUCTION NOTES

(2) REMOVE EXISTING SES AND PANEL AND DISPOSE OF PROPERLY. COORDINATE DISCONNECTION OF THE METER AND SECONDARY CONDUCTORS WITH APS

(3) DE-ENERGIZE EXISTING LAB BUILDING UPON COMPLETION OF CONSTRUCTION OF THE NEW LAB. REMOVE ALL EXISTING CONDUCTORS AND ELECTRICAL EQUIPMENT AND DISPOSE OF PROPERLY. COORDINATE ALL WORK WITH OWNER AND POWER COMPANY PRIOR TO DE-ENERGIZATION.

(4) COORDINATE WITH APS TO REPLACE THE EXISTING POLE MOUNTED SINGLE PHASE TRANSFORMER. APS TO INSTALL THREE PHASE TRANSFORMERS. CONTRACTOR SHALL VERIFY LOCATION OF NEW TRANSFORMER WITH APS. APS PLANS WILL DETERMINE EXACT LOCATION AND TAKE PRECEDENCE OVER THESE DRAWINGS. COORDINATE ALL WORK WITH APS.

(5) APS SERVICE LINE. TRENCH AND INSTALL CONDUIT PER APS SPECIFICATIONS. POWER COMPANY PLANS WILL DETERMINE EXACT LOCATION OF CONDUIT AND TAKE PRECEDENCE OVER THESE DRAWINGS.

(6) SES, 400 AMP, 277/480V, 3ø, 4W, SEE DETAIL 1 ON E4.1.

(80) OVERFLOW LIFT PUMP CONTROL PANEL, BY VENDOR. 240V, 1ø, 3W. ELECTRICAL CONTRACTOR SHALL MAKE ALL POWER AND CONTROL CONNECTIONS PER THESE PLANS AND SPECIFICATIONS AND THE MANUFACTURERS REQUIREMENTS. SEE DETAIL 1 ON SHEET E4.4.

(81) OVERFLOW LIFT PUMP. ELECTRICAL CONTRACTOR SHALL MAKE ALL POWER AND CONTROL CONNECTIONS PER THESE PLANS AND SPECIFICATIONS AND THE MANUFACTURERS REQUIREMENTS. SEE DETAIL 4 ON SHEET E4.5.

(82) LEVEL FLOAT. ELECTRICAL CONTRACTOR SHALL MAKE ALL POWER AND CONTROL CONNECTIONS PER THESE PLANS AND SPECIFICATIONS AND THE MANUFACTURERS REQUIREMENTS. SEE DETAIL 4 ON SHEET E4.5.

(90) JOINT TRENCH WITH WATER LINES. MAINTAIN 24-INCH SEPARATION. SEE DETAIL 3 ON SHEET E4.3.

(98) 20A 120V GFCI DUPLEX RECEPTACLE WITH METAL WEATHERPROOF WHILE-IN-USE AND LOCKABLE COVER INSTALLED ONTO LIGHT POLE. SEE DETAIL 2 ON SHEET E4.5.

LEGEND

- PROPOSED 3ø POWER COMPANY TRANSFORMER
- SES 400A 277/480V 3ø 4W
- TRANSFORMER 480V-120/240V
- PANEL 120/240V 1ø 3W
- CONTROL PANEL
- EYS SEALS, CLASS 1 DIVISION 1
- ELECTRICAL SWITCH
- 120V GFCI RECEPTACLE
- 120V GFCI QUADRUPLEX RECEPTACLE
- ELECTRICAL AND COMMUNICATION PULL BOXES
- NEW PULL BOX
- NON FUSED NEMA 4X DISCONNECT
- UNDERGROUND ELECTRICAL CONDUIT
- ABOVE GROUND ELECTRICAL CONDUIT
- FLEXIBLE METALLIC CONDUIT
- GROUNDING ELECTRODE CONDUCTOR
- GROUND ROD WITH INSPECTION WELL. INSPECTION WELL IS ONLY FOR THE FIRST GROUND ROD CONNECTED TO

ELECTRICAL SITE PLAN - SES & OVERFLOW PUMP STATION

NORTH

GRAPHIC SCALE
5 2.5 0 2.5 5 10
1 INCH = 5 FEET

WRIGHT engineering corporation
ELECTRICAL ENGINEERING AND DESIGN
165 EAST CHILTON DRIVE
CHANDLER, ARIZONA 85225
PHONE: 480.497.5829
FAX: 480.497.5807
www.wrightengineering.us
Wright Project # 23319

CALL TWO WORKING DAYS BEFORE YOU DIG
602-263-1100
1-800-STAKE-IT
(OUTSIDE MARICOPA COUNTY)

NO	BY	DATE	REVISIONS	DATE	APP.

Registered Professional Engineer (Electrical) Certificate No. 73954 JAMES RUSSELL LOTT 09-30-24 Expires 9-30-27

PREPARED BY: WRIGHT ENGINEERING
DESIGNED BY: JHB
DRAWN BY: XAG
CHECKED BY: JHB
SCALE: AS NOTED
DATE: NOV 2025
JOB NO. B614

TITLE: ELECTRICAL OVERFLOW BASIN

JOB: TOWN OF JEROME WASTEWATER TREATMENT PLANT
YAVAPAI CO. AZ

PREPARED BY:
PACE
Advanced Water Engineering
8723 E. VIA de VENTURA, SUITE A-200, SCOTTSDALE, CA 85258
P: (480) 991-3595 | www.pacewater.com

ISSUED FOR BID

SHEET
E3.6
83 OF 99 SHEETS

JOB NO. B614

THESE DRAWINGS ARE THE PROPERTY OF P.A.C.E. AND SHALL NOT BE REPRODUCED IN ANY MANNER NOR BE USED FOR CONSTRUCTION UNLESS STAMPED "ISSUED FOR CONSTRUCTION".

K:\2025\25-pwww\WWTP\25195.dwg Tab: E3.6 by pwww on 11/05/25 at 8:40:41 PM

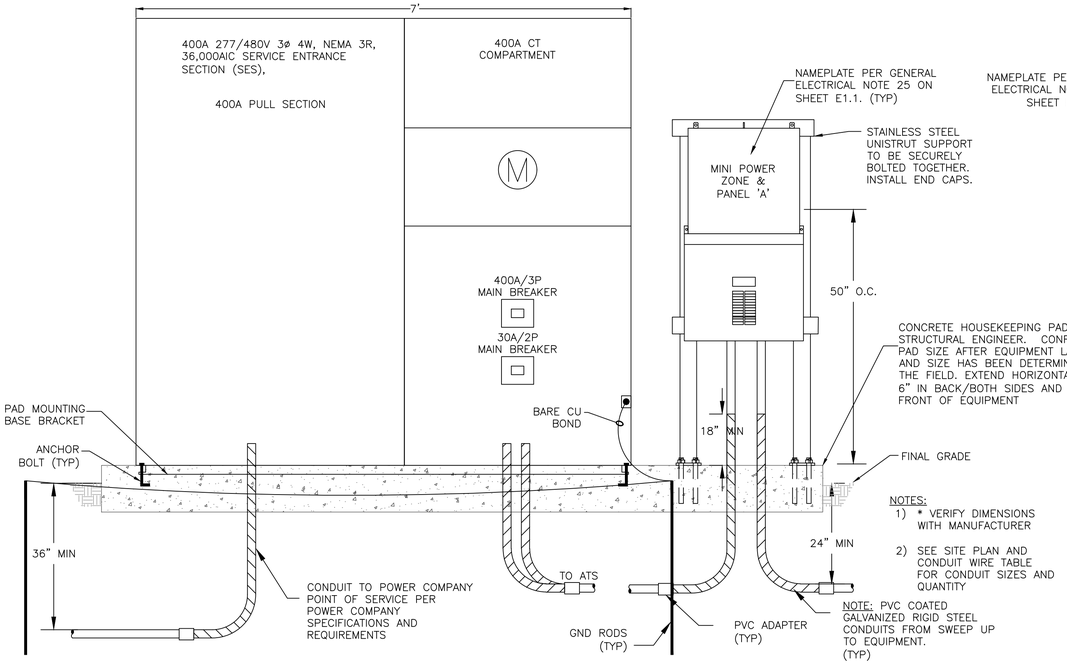

1 SES ELEVATION DETAIL
NO SCALE

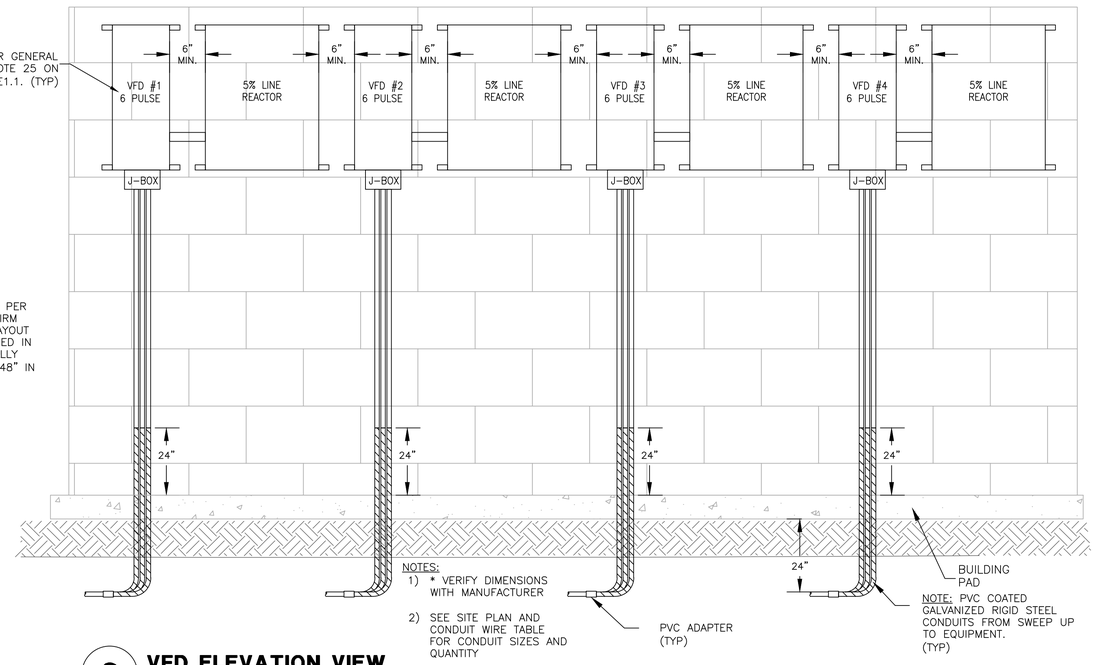

3 VFD ELEVATION VIEW
NOT TO SCALE

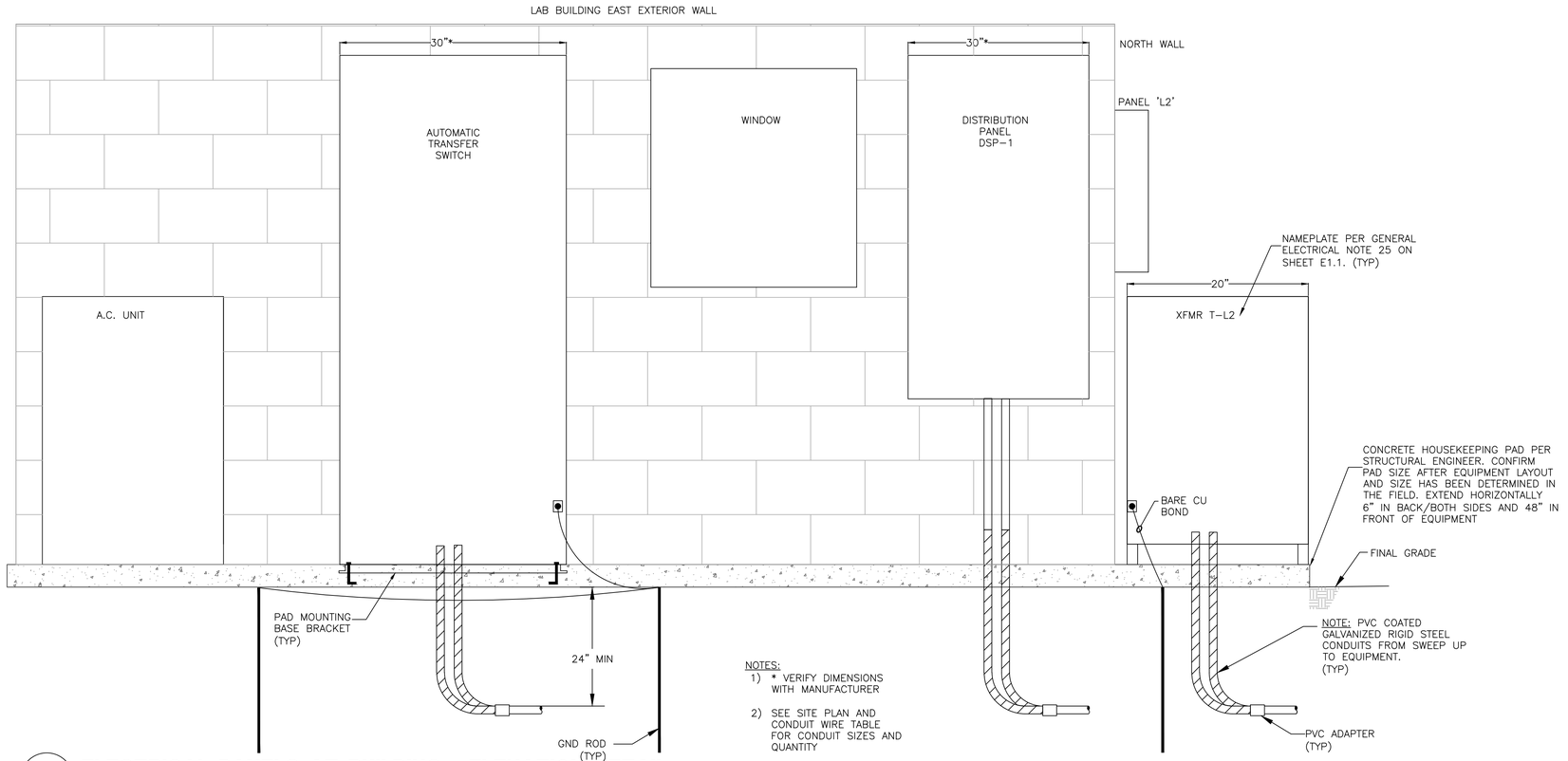

2 ELECTRICAL PANELS AT BUILDING - ELEVATION DETAIL
NO SCALE

WRIGHT engineering corporation
ELECTRICAL ENGINEERING AND DESIGN
165 EAST CHILTON DRIVE
CHANDLER, ARIZONA 85225
PHONE: 480.497.5829
FAX: 480.497.5807
www.wrightengineering.us
Wright Project # 23319

CALL TWO WORKING DAYS BEFORE YOU DIG
602-263-1100
1-800-STAKE-IT
(OUTSIDE MARICOPA COUNTY)

NO	BY	DATE	REVISIONS	DATE	APP.

Registered Professional Engineer (Electrical) Certificate No. 73954 JASON BILLEDT 09-30-24 Expires 9-30-27

PREPARED BY: WRIGHT ENGINEERING
DESIGNED BY: JHB
DRAWN BY: XAG
CHECKED BY: JHB
SCALE: AS NOTED
DATE: NOV 2025
JOB NO. B614

THESE DRAWINGS ARE THE PROPERTY OF P.A.C.E. AND SHALL NOT BE REPRODUCED IN ANY MANNER NOR BE USED FOR CONSTRUCTION UNLESS STAMPED "ISSUED FOR CONSTRUCTION".

TITLE: ELECTRICAL DETAILS I

JOB: TOWN OF JEROME WASTEWATER TREATMENT PLANT
YAVAPAI CO. AZ

PREPARED BY:
PACE
Advanced Water Engineering
8721 E. Via de Commercio, Suite 104 | Scottsdale, CA 85258
P: (408) 991-3595 | www.pacewater.com

ISSUED FOR BID

SHEET
E4.1
84 OF 99 SHEETS

JOB NO. B614

I:\2025\2519-Jerome WWTP\2025 ES Dwg - Tab E4.1 by jacob on 11/24/25 at 8:56:49 PM

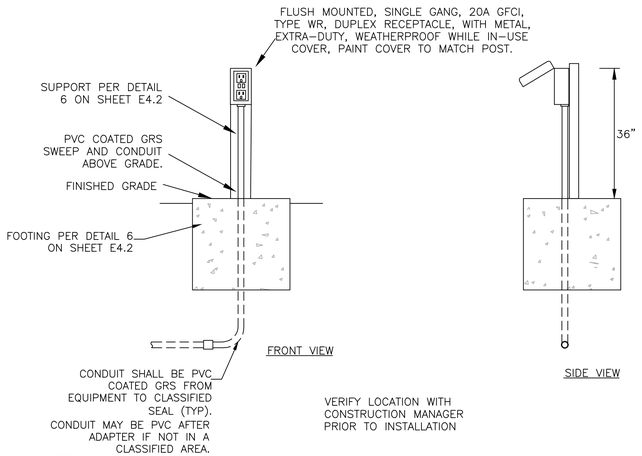

1 RECEPTACLE PEDESTAL DETAIL

NO SCALE

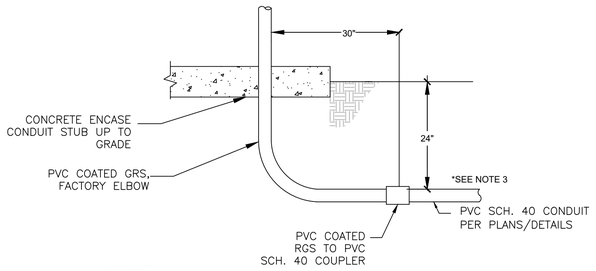

NOTES:
1. ALL DIMENSIONS SHOWN ARE MINIMUM.
2. PROVIDE 6 INCH COVER OF CONCRETE WITHIN 2 FEET OF ALL DRIVABLE AREAS PER DETAILS AND PLAN.
3. CONDUITS THROUGH CLASSIFIED AREA SHALL BE PVC COATED RGS UNDERGROUND

2 TYPICAL CONDUIT STUB UP DETAIL

NO SCALE

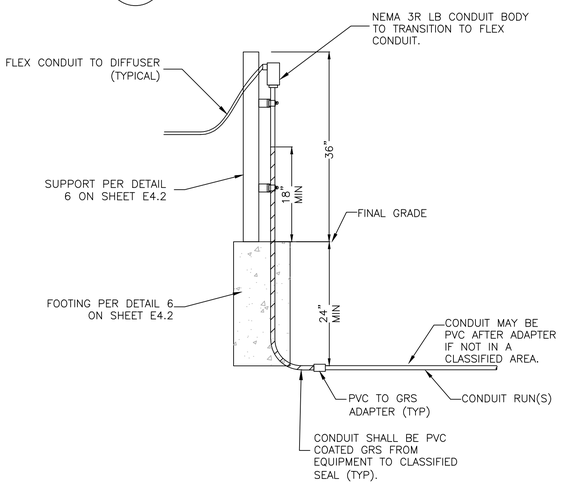

3 CONDUIT TO EQUIPMENT SUPPORT DETAIL

NO SCALE

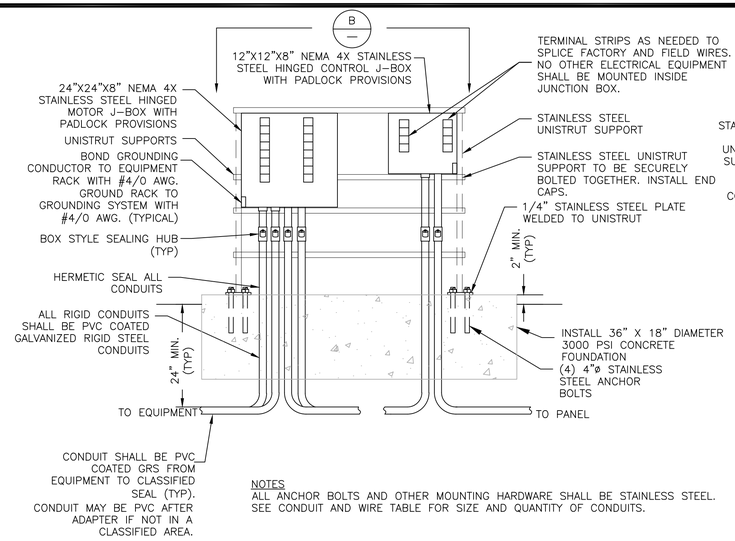

NOTES
ALL ANCHOR BOLTS AND OTHER MOUNTING HARDWARE SHALL BE STAINLESS STEEL.
SEE CONDUIT AND WIRE TABLE FOR SIZE AND QUANTITY OF CONDUITS.

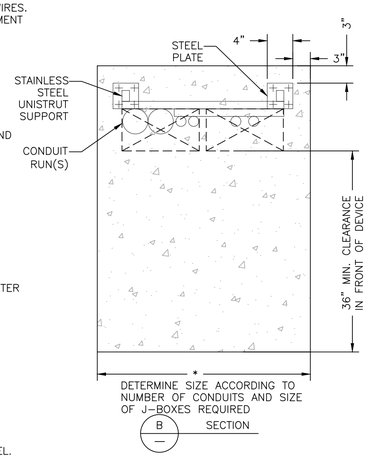

NOTES:
1) A 36" MIN. CLEARANCE SHALL BE MAINTAINED IN FRONT OF ALL ELECTRICAL DEVICES.

2) ALL EXPOSED CONDUITS SHALL BE GALVANIZED RIGID STEEL TO BELOW GRADE PAST 90° BEND TO PVC/GRS ADAPTER UNLESS OTHERWISE NOTED ON PLANS. WRAP PER GENERAL NOTE 11 ON SHEET E1.1.

3) ALL JUNCTION BOXES SHALL BE NEMA-4X STAINLESS STEEL UNLESS OTHERWISE NOTED ON PLANS.

4) ALL BARE STEEL COMPONENTS SHALL BE PRIMED AND PAINTED TAN TO MATCH SURROUNDING EQUIPMENT.

5) SEE RESPECTIVE SITE PLAN FOR CONDUIT SIZE AND QUANTITY DESIGNATIONS.

6)CONTRACTOR SHALL MAINTAIN AN 18" AIR GAP FOR CONDUIT RUN COMING FROM WET WELL. AIR GAP SHALL BE LOCATED AT THE JUNCTION BOX. CONTRACTOR SHALL INSTALL HERMETIC SEALS AT THE END OF THE THE CONDUIT RUNS INTO VAULT WALL TO PREVENT MOISTURE FROM ENTERING CONDUIT. CONDUIT SHALL BE CONTINUOUS GRS FROM WET WELL TO AIR GAP.

4 STANCHION MOUNTED JUNCTION BOX

NO SCALE

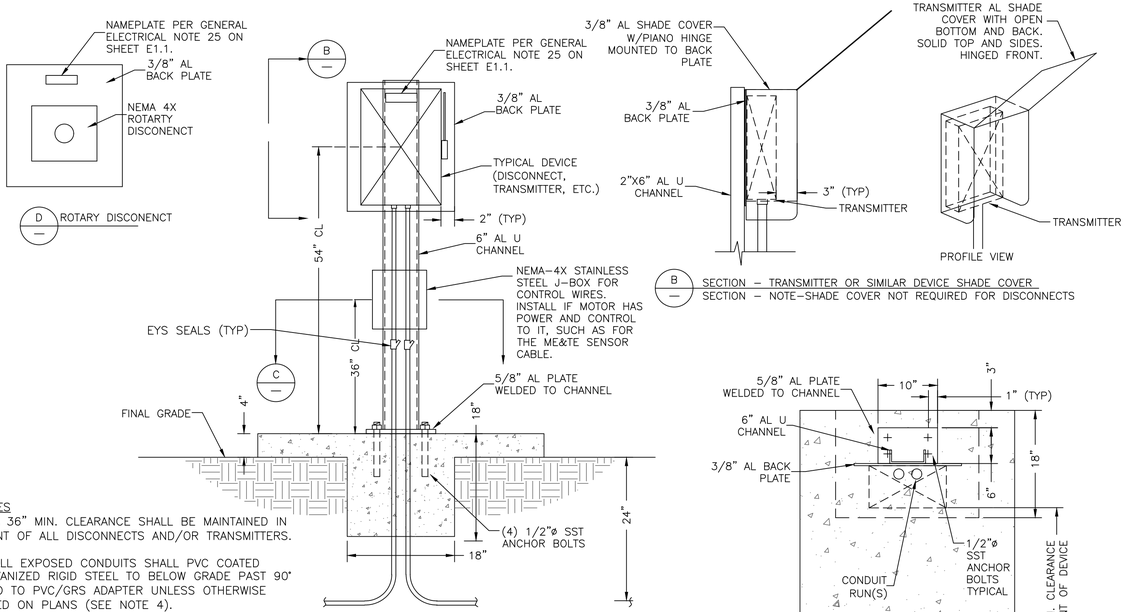

NOTES
1) A 36" MIN. CLEARANCE SHALL BE MAINTAINED IN FRONT OF ALL DISCONNECTS AND/OR TRANSMITTERS.

2) ALL EXPOSED CONDUITS SHALL PVC COATED GALVANIZED RIGID STEEL TO BELOW GRADE PAST 90° BEND TO PVC/GRS ADAPTER UNLESS OTHERWISE NOTED ON PLANS (SEE NOTE 4).

3) ALL DISCONNECTS SHALL BE NEMA-4X STAINLESS STEEL UNLESS OTHERWISE NOTED ON PLANS.

4)CONTRACTOR SHALL MAINTAIN 18" AIR GAP ON CONDUIT RUN COMING FROM WET WELL. AIR GAP SHALL BE LOCATED AT THE JUNCTION BOX. AIR GAP SHALL CONFORM TO THE NATIONAL ELECTRICAL CODE FOR CLASS 1, DIVISION 1 HAZARDOUS AREA. CONTRACTOR SHALL INSTALL HERMETIC SEALS AT THE END OF THE THE CONDUIT RUNS INTO VAULT WALL TO PREVENT MOISTURE FROM ENTERING CONDUIT. CONDUIT SHALL BE CONTINUOUS GRS FROM WET WELL TO 18" AIR GAP.

5 DISCONNECT/CONTROL NEMA 4X J-BOX DETAIL

NO SCALE

WRIGHT engineering corporation
ELECTRICAL ENGINEERING AND DESIGN
165 EAST CHILTON DRIVE
CHANDLER, ARIZONA 85225
PHONE: 480.497.5829
FAX: 480.497.5807
www.wrightengineering.us
Wright Project # 23319

CALL TWO WORKING DAYS BEFORE YOU DIG
602-263-1100
1-800-STAKE-IT
(OUTSIDE MARICOPA COUNTY)

NO	BY	DATE	REVISIONS	DATE	APP.

Registered Professional Engineer (Electrical) Certificate No. 73954 JASON BILLESDON Date Signed 9-30-25 Expires 9-30-27

PREPARED BY: WRIGHT ENGINEERING
DESIGNED BY: JHB
DRAWN BY: XAG
CHECKED BY: JHB
SCALE: AS NOTED
DATE: NOV 2025
JOB NO. B614

THESE DRAWINGS ARE THE PROPERTY OF P.A.C.E. AND SHALL NOT BE REPRODUCED IN ANY MANNER NOR BE USED FOR CONSTRUCTION UNLESS STAMPED "ISSUED FOR CONSTRUCTION".

TITLE: ELECTRICAL DETAILS II

JOB: TOWN OF JEROME WASTEWATER TREATMENT PLANT YAVAPAI CO. AZ

ISSUED FOR BID

PREPARED BY:
PACE
Advanced Water Engineering
8723 E. Via de Ventura, Suite 100, SCOTTSDALE, CA 85258
P: (480) 991-3955 | www.pacewater.com

SHEET E4.2
85 OF 99 SHEETS

JOB NO. B614

I:\2025\25-jerome WWTP\25-015 E4.2 - Tab E4.2 - Detail.dwg, Tab: E4.2 - by jacob on 11/24/25 at 3:56:10 PM

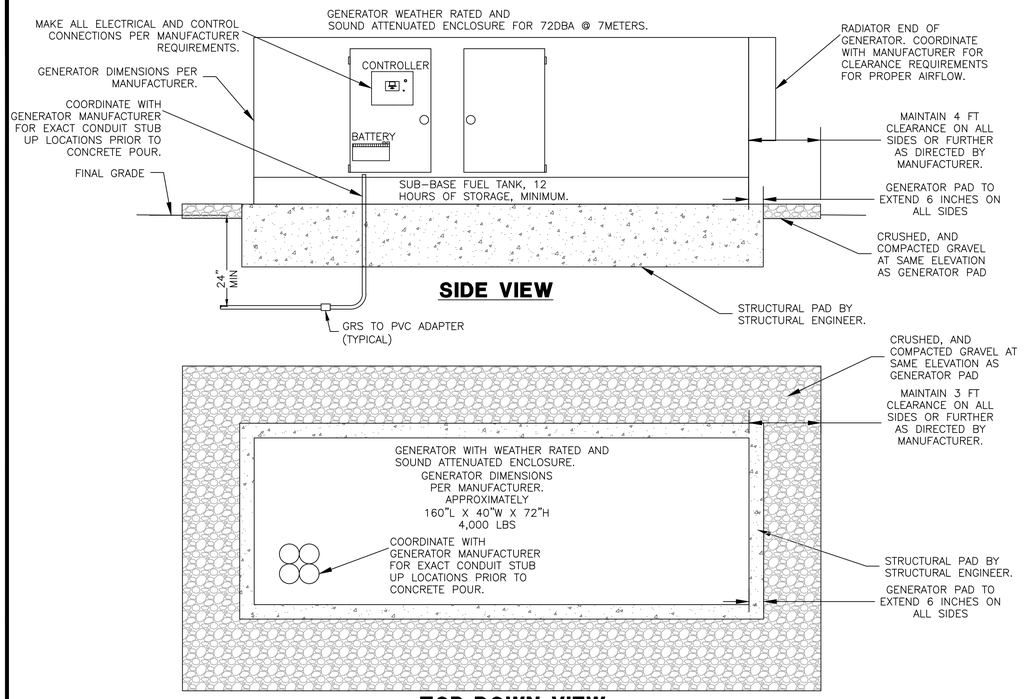

1 GENERATOR INSTALLATION DETAIL

NO SCALE

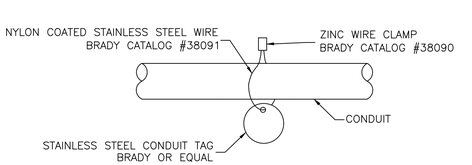

2 CONDUIT TAG DETAIL

NO SCALE

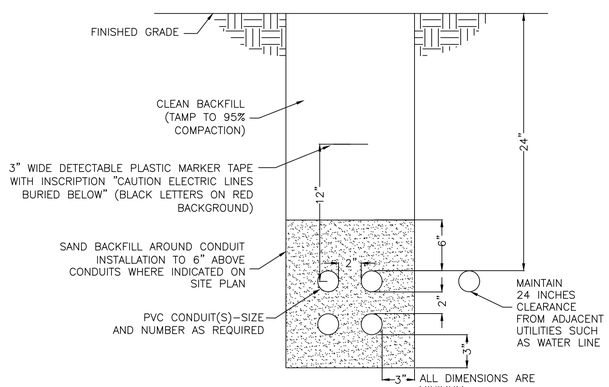

NOTE:

1) THIS CONDUIT DUCT BANK DETAIL SHALL BE REFERENCED FOR ALL UNDER GROUND CONDUIT INSTALLATIONS.

2) INSTALL CONDUIT SPACERS EVERY 6 FT. MAX., CARLON OR EQUAL.

3 CONDUIT DUCT BANK INSTALLATION DETAIL

NO SCALE

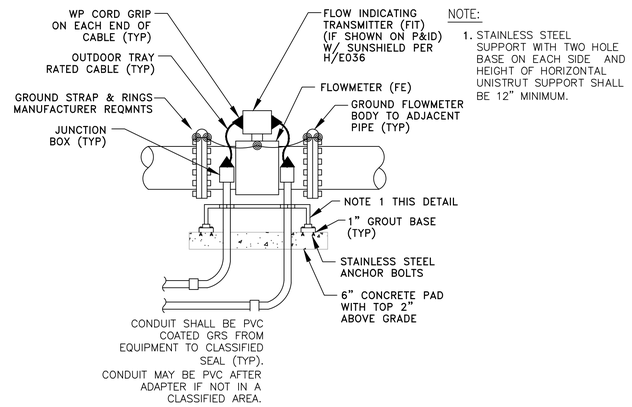

NOTE:

1. STAINLESS STEEL SUPPORT WITH TWO HOLE BASE ON EACH SIDE AND HEIGHT OF HORIZONTAL UNISTRUT SUPPORT SHALL BE 12" MINIMUM.

4 FLOWMETER DETAIL

NO SCALE

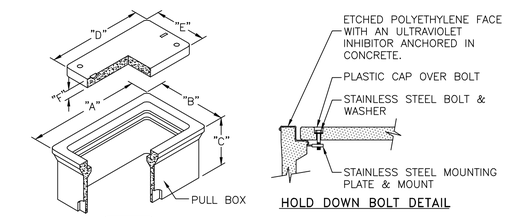

HOLD DOWN BOLT DETAIL

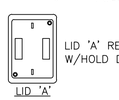

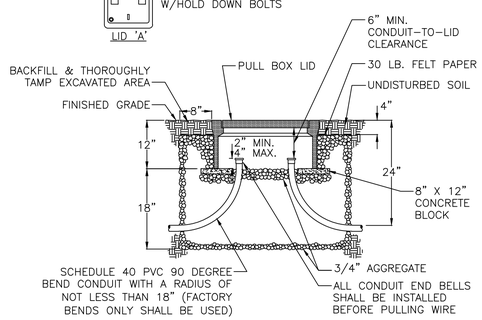

5 PULL BOX INSTALLATION DETAIL

NO SCALE

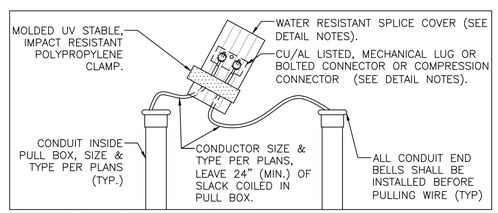

SPLICES INSIDE PULL BOX

DETAIL NOTES:

1. THE PULL BOX SHALL BE MADE OF A HIGH DENSITY REINFORCED CONCRETE MATERIAL WITH END & SIDE KNOCKOUTS, & NON-SETTLING SHOULDERS TO MAINTAIN GRADE, MANUFACTURED WITH APPROXIMATE DIMENSIONS AS SHOWN.
2. STEEL REINFORCEMENT SHALL BE AS REGULARLY USED IN STANDARD PRODUCTS OF THE RESPECTIVE MANUFACTURER.
3. COVER LETTERING SHALL BE 1" LETTERS CAST IN STANDARD MARKINGS: "ELECTRIC" OR "HIGH VOLTAGE" OR "COMMUNICATIONS". AS REQUIRED.
4. THE PULL BOX SHALL HAVE AN ETCHED POLYETHYLENE FACE WITH AN ULTRAVIOLET INHIBITOR ANCHORED IN CONCRETE.
5. ALL CABLE & CONDUCTOR SPLICES MADE USING CU/AL LISTED, MECHANICAL LUG OR BOLTED CONNECTOR OR COMPRESSION CONNECTOR, (TYCO ELECTRONICS, NSI INDUSTRIES, ILSCO OR APPROVED EQUAL). CONNECTION TO BE INSULATED & MADE WATER RESISTANT WITH TYCO ELECTRONICS GELCAP-SL, NSI INDUSTRIES ESSLK-2/0 OR 3M SCOTCHCAST SPLICE KIT 85 SERIES.

DATA TABLE

PULLBOX TYPE	PULLBOX LENGTH	PULLBOX WIDTH	PULLBOX HEIGHT	LID LENGTH	LID WIDTH	LID HEIGHT
	"A"	"B"	"C"	"D"	"E"	"F"
#3-1/2	19-3/4"	14-1/4"	12"	15-1/2"	10"	1-3/4"
#5	25-1/8"	15-5/8"	12"	20-3/4"	10-5/8"	2"
#7	35"	22"	12"	30-1/2"	17-1/2"	2"
#9	40-1/2"	28-1/4"	18"	35-1/2"	24"	3"

WRIGHT engineering corporation
ELECTRICAL ENGINEERING AND DESIGN
165 EAST CHILTON DRIVE
CHANDLER, ARIZONA 85225
PHONE: 480.497.5829
FAX: 480.497.5807
www.wrightengineering.us
Wright Project # 23319

CALL TWO WORKING DAYS BEFORE YOU DIG
602-263-1100
1-800-STAKE-IT
(OUTSIDE MARICOPA COUNTY)

NO	BY	DATE	REVISIONS	DATE	APP.

Registered Professional Engineer (Electrical) Certificate No. 73954 JASON BILLEDT 04-24-27 Expires 6-30-27

PREPARED BY: WRIGHT ENGINEERING
DESIGNED BY: JHB
DRAWN BY: XAG
CHECKED BY: JHB
SCALE: AS NOTED
DATE: NOV 2025
JOB NO. B614

TITLE: ELECTRICAL DETAILS III

JOB: TOWN OF JEROME WASTEWATER TREATMENT PLANT YAVAPAI CO. AZ

PREPARED BY: PACE Advanced Water Engineering
8123 E. VIA DE COMERCIO, BUILDING 3, SCOTTSDALE, CA 85258
P: (480) 991-3555 | www.pacewater.com

ISSUED FOR BID

SHEET E4.3
86 OF 99 SHEETS

JOB NO. B614

THESE DRAWINGS ARE THE PROPERTY OF P.A.C.E. AND SHALL NOT BE REPRODUCED IN ANY MANNER NOR BE USED FOR CONSTRUCTION UNLESS STAMPED "ISSUED FOR CONSTRUCTION".

N:\2025\25-Homes\WWTP\E4.3.dwg, 11x17, 1:1, 11/25/2025 at 10:45:47 PM

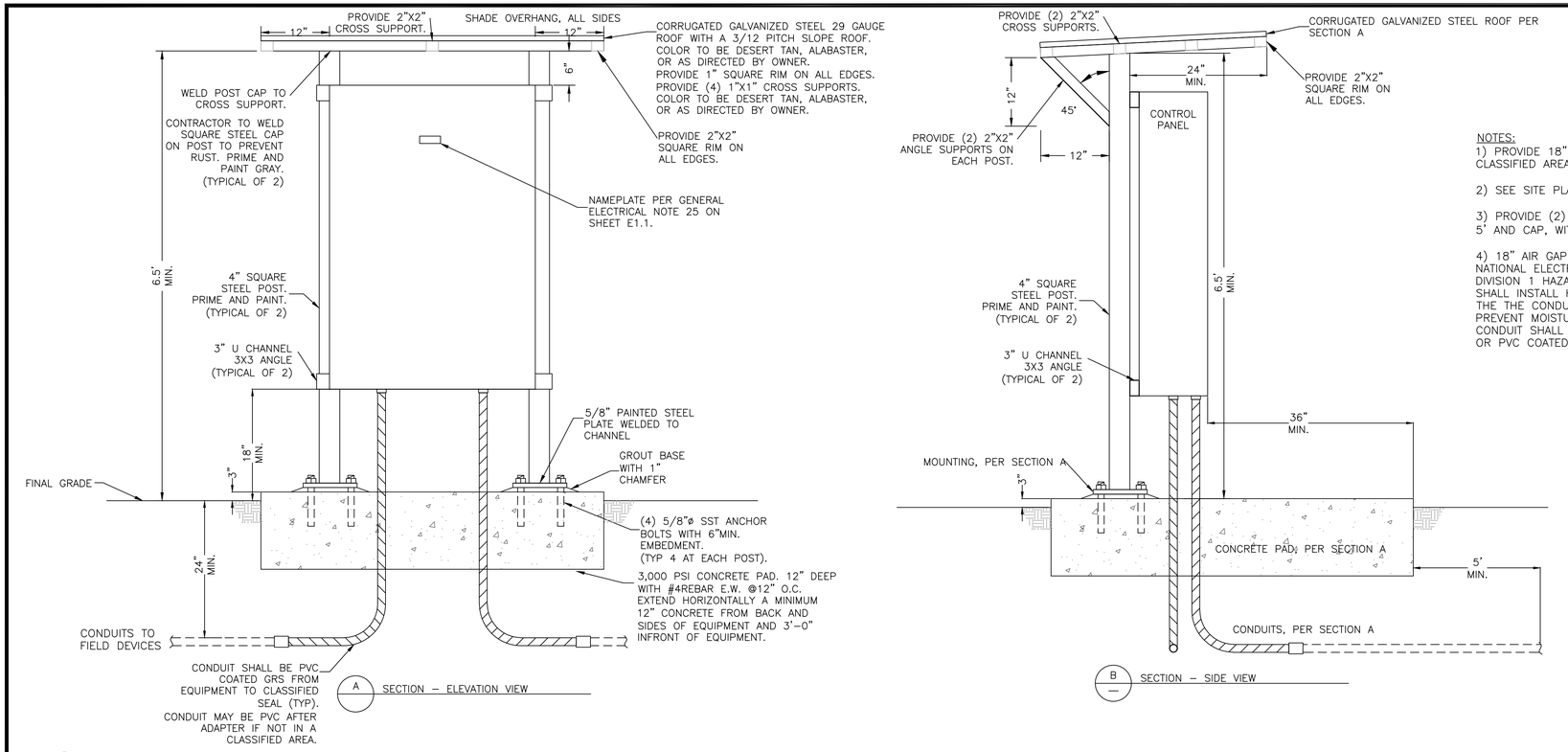

NOTES:
1) PROVIDE 18" AIR GAP WHEN CONDUITS ENTER CLASSIFIED AREAS.

2) SEE SITE PLAN FOR QUANTITY OF CONDUITS.

3) PROVIDE (2) 1.5" SPARE CONDUITS, EXTEND 5' AND CAP, WITH DETECTABLE PULL ROPE.

4) 18" AIR GAP SHALL CONFORM TO THE NATIONAL ELECTRICAL CODE FOR CLASS 1, DIVISION 1 HAZARDOUS AREA. CONTRACTOR SHALL INSTALL HERMETIC SEALS AT THE END OF THE THE CONDUIT RUNS INTO VAULT WALL TO PREVENT MOISTURE FROM ENTERING CONDUIT. CONDUIT SHALL BE CONTINUOUS GRS WRAPPED OR PVC COATED FROM WET WELL TO AIR GAP.

1 FREESTANDING CONTROL PANEL

NO SCALE

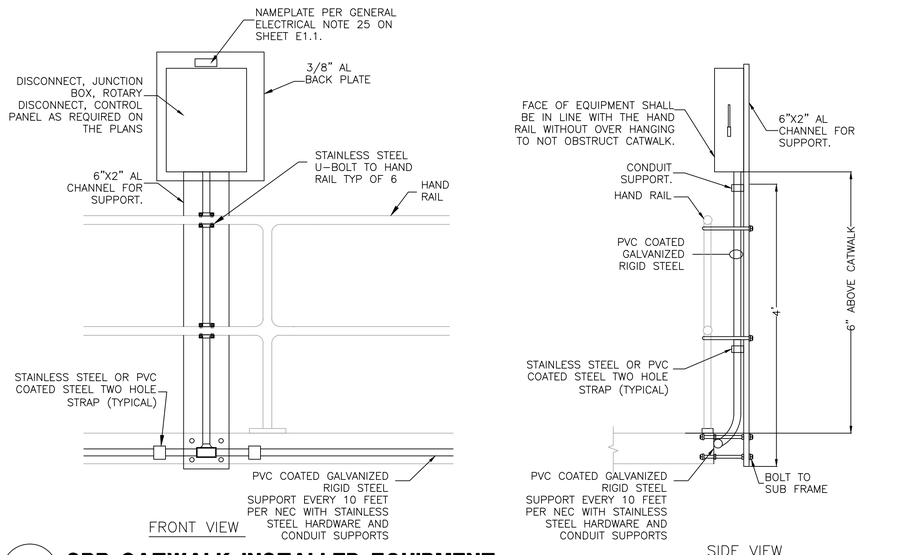

2 SBR CATWALK INSTALLED EQUIPMENT

NO SCALE

WRIGHT engineering corporation
ELECTRICAL ENGINEERING AND DESIGN
165 EAST CHILTON DRIVE
CHANDLER, ARIZONA 85225
PHONE: 480.497.5829
FAX: 480.497.5807
www.wrightengineering.us
Wright Project # 23319

CALL TWO WORKING DAYS BEFORE YOU DIG
602-263-1100
1-800-STAKE-IT
(OUTSIDE MARICOPA COUNTY)

NO	BY	DATE	REVISIONS	DATE	APP.

Registered Professional Engineer (Electrical) Certificate No. 73954 JASON RILEY LOTT Date Signed 9-30-25 Expires 9-30-27

PREPARED BY: WRIGHT ENGINEERING
DESIGNED BY: JHB
DRAWN BY: XAG
CHECKED BY: JHB
SCALE: AS NOTED
DATE: NOV 2025
JOB NO. B614

TITLE: ELECTRICAL DETAILS IV

JOB: TOWN OF JEROME WASTEWATER TREATMENT PLANT
YAVAPAI CO. AZ

PREPARED BY:
PACE
Advanced Water Engineering
8712 E. Via de Commercio, Suite 3A, Scottsdale, CA 85258
P: (480) 991-3595 | www.pacewater.com

ISSUED FOR BID

SHEET
E4.4
87 OF 99 SHEETS

JOB NO. B614

THESE DRAWINGS ARE THE PROPERTY OF P.A.C.E. AND SHALL NOT BE REPRODUCED IN any MANNER NOR BE USED FOR CONSTRUCTION UNLESS STAMPED "ISSUED FOR CONSTRUCTION".

H:\2025\2519-Jerome WWTP\2519-Elec Fac E4.4 - Hy pvdbl on 11/04/25 at 10:56 PM

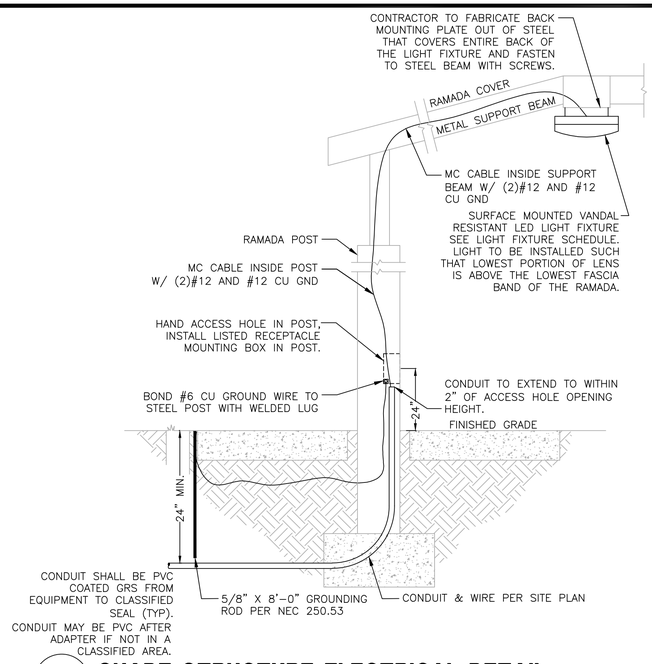

1 SHADE STRUCTURE ELECTRICAL DETAIL

NO SCALE

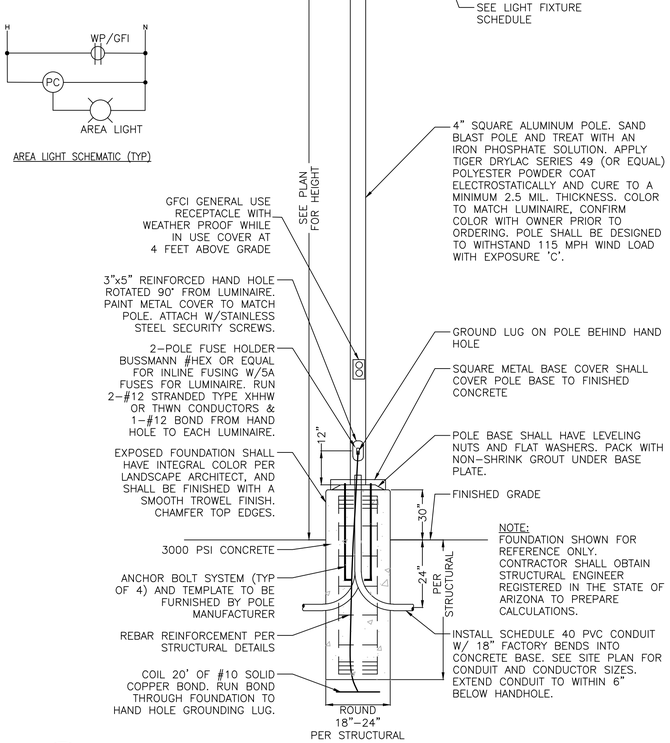

2 AREA LIGHT DETAIL

NO SCALE

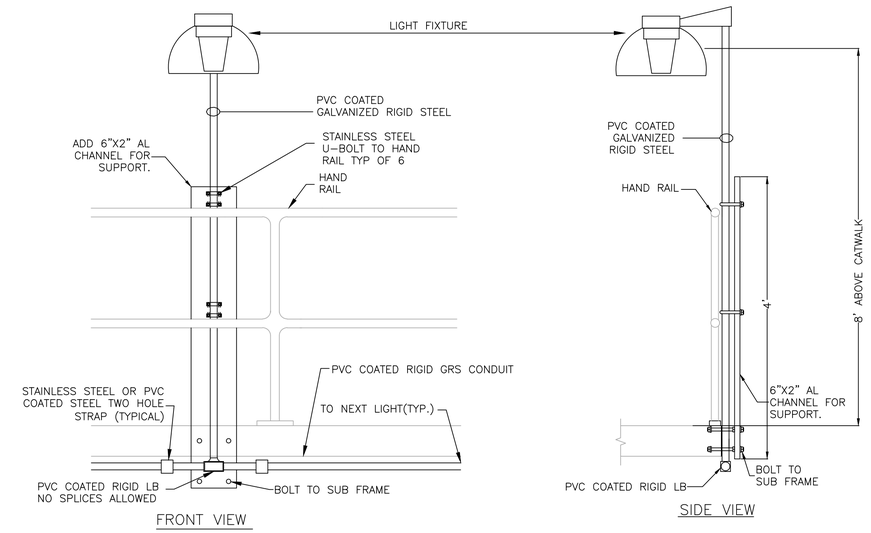

3 SBR LIGHT DETAIL

NO SCALE

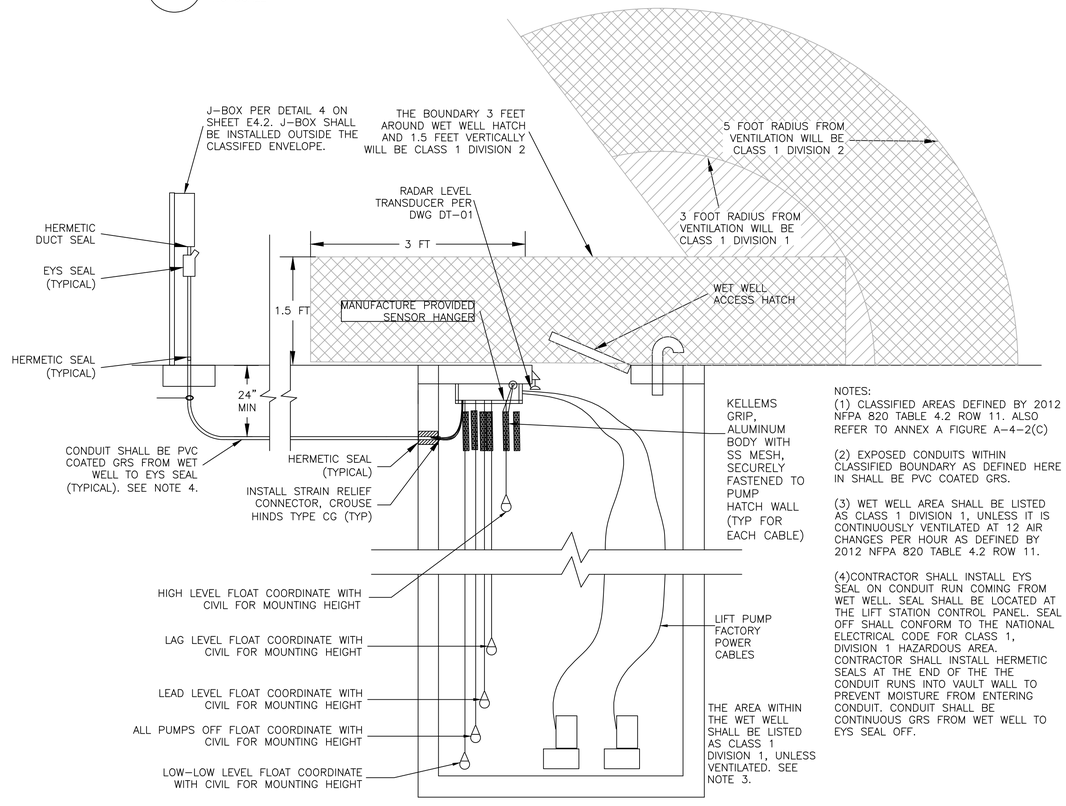

NOTES:
(1) CLASSIFIED AREAS DEFINED BY 2012 NFPA 820 TABLE 4.2 ROW 11. ALSO REFER TO ANNEX A FIGURE A-4-2(C)

(2) EXPOSED CONDUITS WITHIN CLASSIFIED BOUNDARY AS DEFINED HERE IN SHALL BE PVC COATED GRS.

(3) WET WELL AREA SHALL BE LISTED AS CLASS 1 DIVISION 1, UNLESS IT IS CONTINUOUSLY VENTILATED AT 12 AIR CHANGES PER HOUR AS DEFINED BY 2012 NFPA 820 TABLE 4.2 ROW 11.

(4)CONTRACTOR SHALL INSTALL EYS SEAL ON CONDUIT RUN COMING FROM WET WELL. SEAL SHALL BE LOCATED AT THE LIFT STATION CONTROL PANEL. SEAL OFF SHALL CONFORM TO THE NATIONAL ELECTRICAL CODE FOR CLASS 1, DIVISION 1 HAZARDOUS AREA. CONTRACTOR SHALL INSTALL HERMETIC SEALS AT THE END OF THE THE CONDUIT RUNS INTO VAULT WALL TO PREVENT MOISTURE FROM ENTERING CONDUIT. CONDUIT SHALL BE CONTINUOUS GRS FROM WET WELL TO EYS SEAL OFF.

4 LIFT STATION DETAIL

NO SCALE

NOTE
LEVEL CONTROLS SHOWN FOR REFERENCE ONLY, MOUNT LEVEL CONTROLS PER CIVIIL/MECHANICAL DRAWINGS.

WRIGHT engineering corporation
ELECTRICAL ENGINEERING AND DESIGN
165 EAST CHILTON DRIVE
CHANDLER, ARIZONA 85225
PHONE: 480.497.5829
FAX: 480.497.5807
www.wrightengineering.us
Wright Project # 23319

CALL TWO WORKING DAYS BEFORE YOU DIG
602-263-1100
1-800-STAKE-IT
(OUTSIDE MARICOPA COUNTY)

NO	BY	DATE	REVISIONS	DATE	APP.

Registered Professional Engineer (Electrical) Certificate No. 73954 JAMES BELLEDIT 3-24-25 Expires 9-30-27

PREPARED BY: WRIGHT ENGINEERING
DESIGNED BY: JHB
DRAWN BY: XAG
CHECKED BY: JHB
DATE: NOV 2025
JOB NO. B614
SCALE: AS NOTED

THESE DRAWINGS ARE THE PROPERTY OF P.A.C.E. AND SHALL NOT BE REPRODUCED IN ANY MANNER NOR BE USED FOR CONSTRUCTION UNLESS STAMPED "ISSUED FOR CONSTRUCTION".

TITLE
ELECTRICAL DETAILS V

JOB
TOWN OF JEROME
WASTEWATER TREATMENT PLANT
YAVAPAI CO. AZ

ISSUED FOR BID

PREPARED BY:
PACE
Advanced Water Engineering
8723 E. VIA DE COMERCIO, STE. 104, SCOTTSDALE, CA 85258
P. (480) 991-3595 | www.pacewater.com

SHEET
E4.5
88 OF 99 SHEETS

JOB NO. B614

K:\2025\2519-James WWTP\2519-E.dwg Tab: E4.5 by paceb on 11/04/25 at 8:49:40 PM

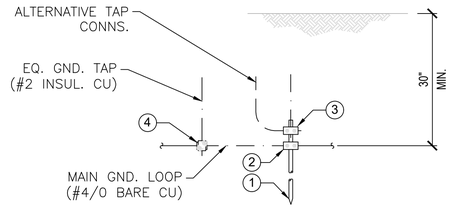

BILL OF MATERIALS		
NO.	DESCRIPTION	QTY
1	GROUND ROD, 3/4" DIA. x 10', COPPER-CLAD STEEL	1
2	GROUND ROD CONNECTOR (5/8"-3/4", 2/0 SOL-250) BURNDY #GAR6429 OR EQUAL.	1
3	GROUND ROD CONNECTOR (5/8"-3/4", #4 SOL-2/0) BURNDY #GAR6426 OR EQUAL.	1
4	GROUND CABLE CONNECTOR (#2/0-250 TO #4-#2/0) BURNDY #GX2926 OR EQUAL.	1

1 GROUND ROD INSTALLATION DETAIL
NO SCALE

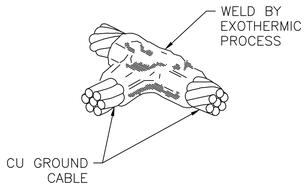

2 GROUND RING CONNECTION DETAIL
NO SCALE

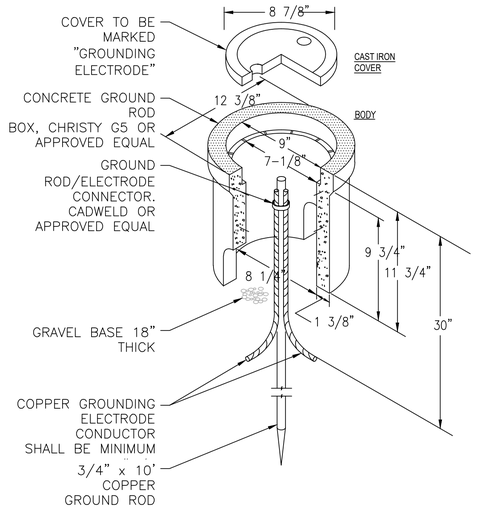

4 CONCRETE GROUND ROD INSPECTION DETAIL
NO SCALE

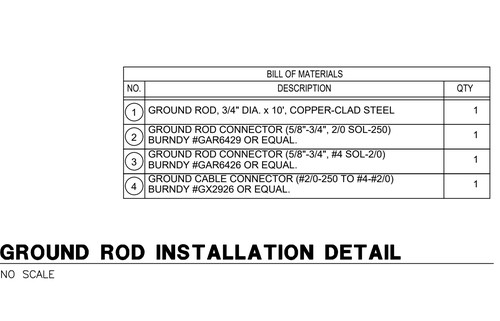

BILL OF MATERIALS		
NO.	DESCRIPTION	QTY
1	#4 RE-BAR, 1/2" DIA. – USE GND. CONN. BURNDY #GAR1126	1
2	#5 OR #6 RE-BAR, 5/8" OR 3/4" DIA. – USE GND. CONN. BURNDY #GAR6426	1
3	#7 OR #8 RE-BAR, 7/8" OR 1" DIA. – USE GND. CONN. BURNDY #GAR1426	1

3 GROUND ROD TO REBAR DETAIL
NO SCALE

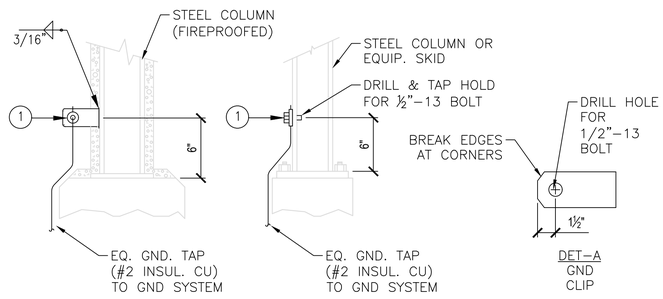

BILL OF MATERIALS		
NO.	DESCRIPTION	QTY
1	SERVIT POST CONNECTOR, 2/C, 1/2"–13 LONG STUD, #2–#2/0 W/ NUT & LOCKWASHER, BURNDY#K2C25B1	1
2	GROUND CLIP, MILD STEEL, 5" x 3" x 1/4" FIELD FABRICATE – SEE DET–A	1

5 GROUNDING CONNECTION - EQUIP/STEEL COLUMN
NO SCALE

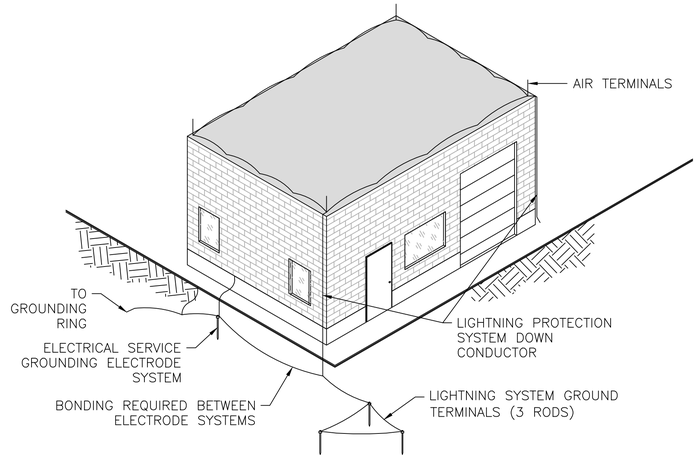

NOTES:
1. THE LIGHTNING ROD IS CONNECTED TO GROUND WITH AT LEAST TWO DOWN CONDUCTORS LOCATED ON OPPOSITE FACADES WHEREVER POSSIBLE.
2. THE DOWN CONDUCTORS MUST BE INSTALLED OUTSIDE THE BUILDING, AVOIDING THE PROXIMITY OF ELECTRICAL CABLES AND GAS. ITS PATH MUST BE AS STRAIGHT AS POSSIBLE, USING THE SHORTEST PATH TO EARTH, AVOIDING ANY SHARP BEND OR LIFT.
3. INSTALL IN ACCORDANCE WITH NFPA 780, NEC 250.60 AND NEC 250.106.
4. DETAIL SHOWN FOR REFERENCE ONLY.

6 LIGHTNING PROTECTION SYSTEM DETAIL
NO SCALE

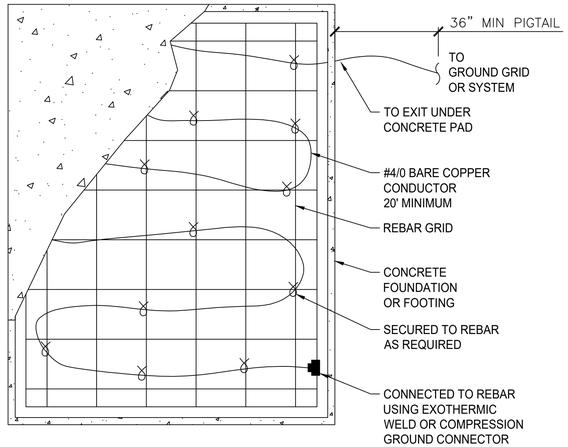

7 CONCRETE GROUNDING DETAIL
NO SCALE

WRIGHT engineering corporation
ELECTRICAL ENGINEERING AND DESIGN
165 EAST CHILTON DRIVE
CHANDLER, ARIZONA 85225
PHONE: 480.497.5829
FAX: 480.497.5807
www.wrightengineering.us
Wright Project # 23319

CALL TWO WORKING DAYS BEFORE YOU DIG
602-263-1100
1-800-STAKE-IT
(OUTSIDE MARICOPA COUNTY)

NO	BY	DATE	REVISIONS	DATE	APP.

Registered Professional Engineer (Electrical) Certificate No. 73954 JASON RILEY LOTT Date Signed 9-30-25 Expires 9-30-27

PREPARED BY: WRIGHT ENGINEERING
DESIGNED BY: JHB
DRAWN BY: XAG
CHECKED BY: JHB
SCALE: AS NOTED
DATE: NOV 2025
JOB NO. B614

TITLE: ELECTRICAL DETAILS VI

JOB: TOWN OF JEROME WASTEWATER TREATMENT PLANT YAVAPAI CO. AZ

PREPARED BY: PACE Advanced Water Engineering
8721 E. Via de Ventura, Suite 110, SCOTTSDALE, CA 85258
P: (480) 991-3595 | www.pacewater.com

ISSUED FOR BID

SHEET E4.6
89 OF 99 SHEETS

JOB NO. B614

THESE DRAWINGS ARE THE PROPERTY OF P.A.C.E. AND SHALL NOT BE REPRODUCED IN ANY MANNER NOR BE USED FOR CONSTRUCTION UNLESS STAMPED "ISSUED FOR CONSTRUCTION".

T:\2025\2519_Jerome WWTP\CAD\E4.6.dwg, Tab: E4.6, by jason on 11/04/25 at 3:56:31 PM

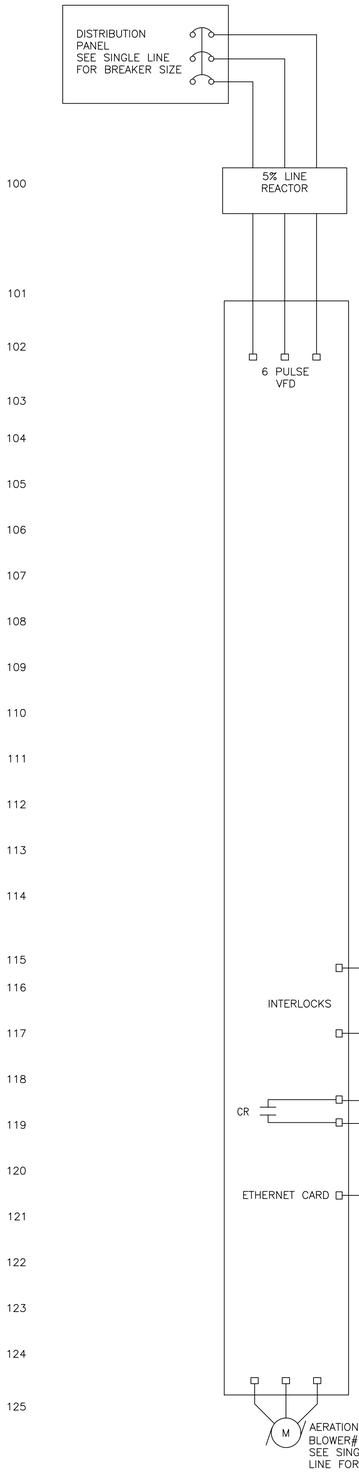

AERATION BLOWER #1 CONTROL SCHEMATIC

24VDC, 120VAC & 480VAC

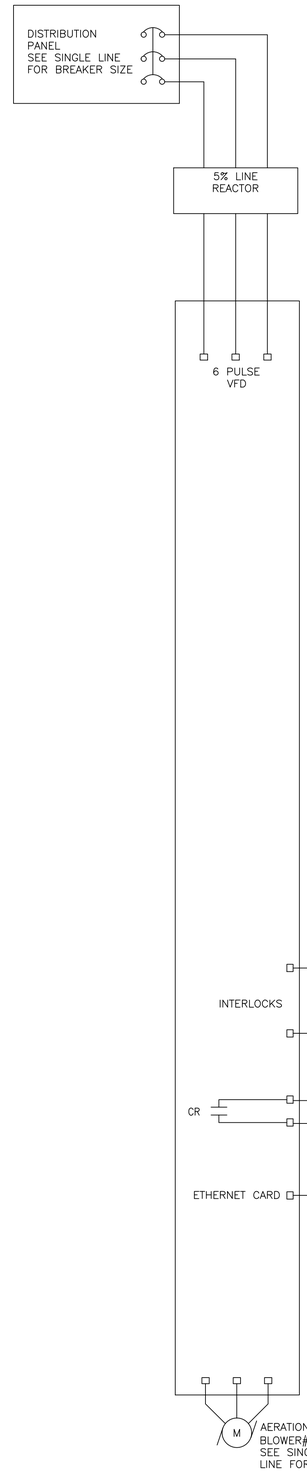

AERATION BLOWER #2 CONTROL SCHEMATIC

24VDC, 120VAC & 480VAC

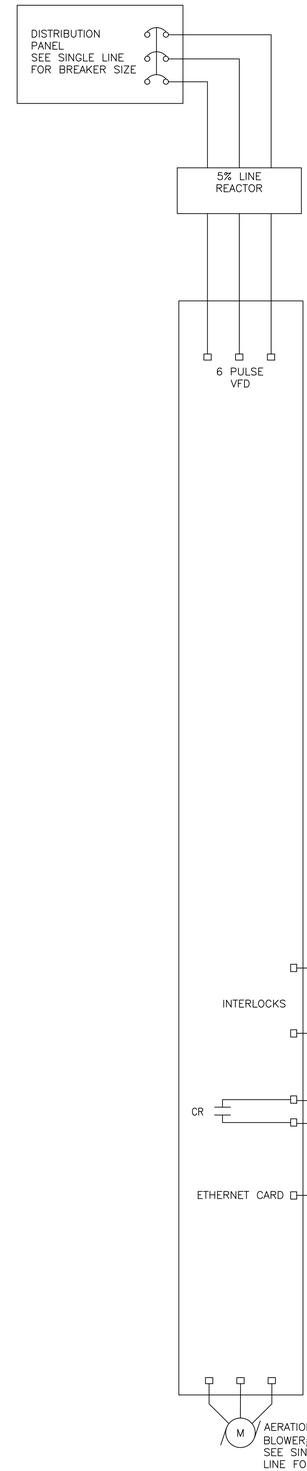

AERATION BLOWER #3 CONTROL SCHEMATIC

24VDC, 120VAC & 480VAC

WRIGHT engineering corporation
ELECTRICAL ENGINEERING AND DESIGN
165 EAST CHILTON DRIVE
CHANDLER, ARIZONA 85225
PHONE: 480.497.5829
FAX: 480.497.5807
www.wrightengineering.us
Wright Project # 23319

CALL TWO WORKING DAYS BEFORE YOU DIG
602-263-1100
1-800-STAKE-IT
(OUTSIDE MARICOPA COUNTY)

NO	BY	DATE	REVISIONS	DATE	APP.

Registered Professional Engineer (Electrical) Certificate No. 73954 JAMES RILLETT DYER Date Signed 9-30-25 Expires 9-30-27

PREPARED BY: WRIGHT ENGINEERING
DESIGNED BY: JHB
DRAWN BY: XAG
CHECKED BY: JHB
SCALE: AS NOTED
DATE: NOV 2025
JOB NO.: B614

THESE DRAWINGS ARE THE PROPERTY OF P.A.C.E. AND SHALL NOT BE REPRODUCED IN ANY MANNER NOR BE USED FOR CONSTRUCTION UNLESS STAMPED "ISSUED FOR CONSTRUCTION".

ISSUED FOR BID

TITLE: ELECTRICAL SCHEMATICS I

JOB: TOWN OF JEROME WASTEWATER TREATMENT PLANT YAVAPAI CO. AZ

PREPARED BY:
PACE
Advanced Water Engineering
8723 E. Via de Commercio, Suite A-104, Scottsdale, AZ 85258
P: (480) 991-3595 | www.pacewater.com

SHEET E5.1
90 OF 99 SHEETS

JOB NO. B614

I:\JOBS\2019\-Jerome WWTP\2019-E.dwg, 10/1/2025 9:41:11 AM, Jeff, 1:1

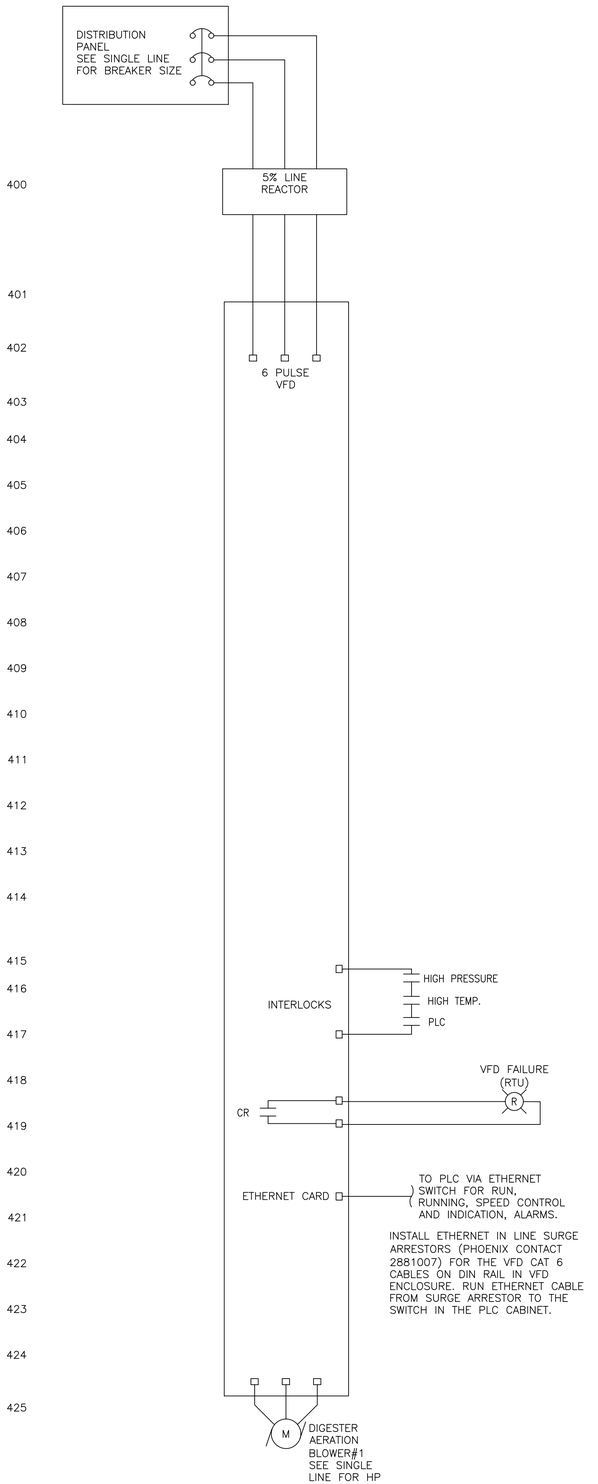

DIGESTER AERATION BLOWER #1 CONTROL SCHEMATIC

24VDC, 120VAC & 480VAC

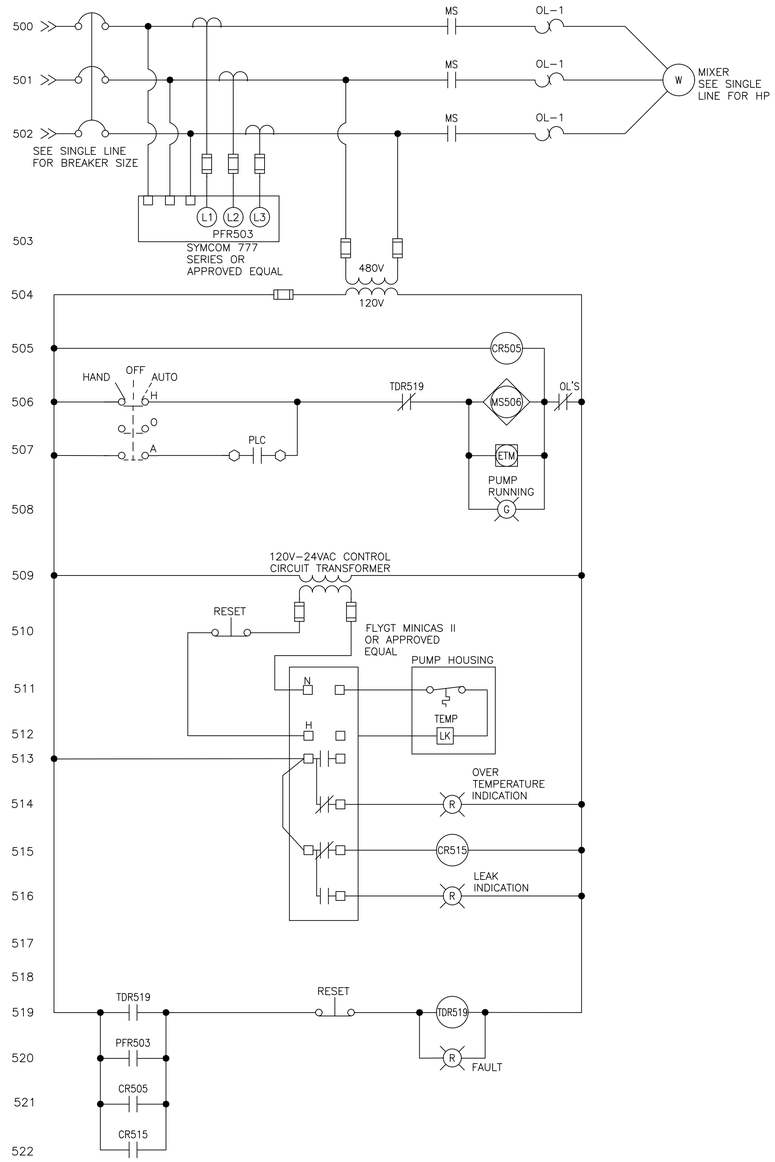

MIXER #1 CONTROL SCHEMATIC

120V

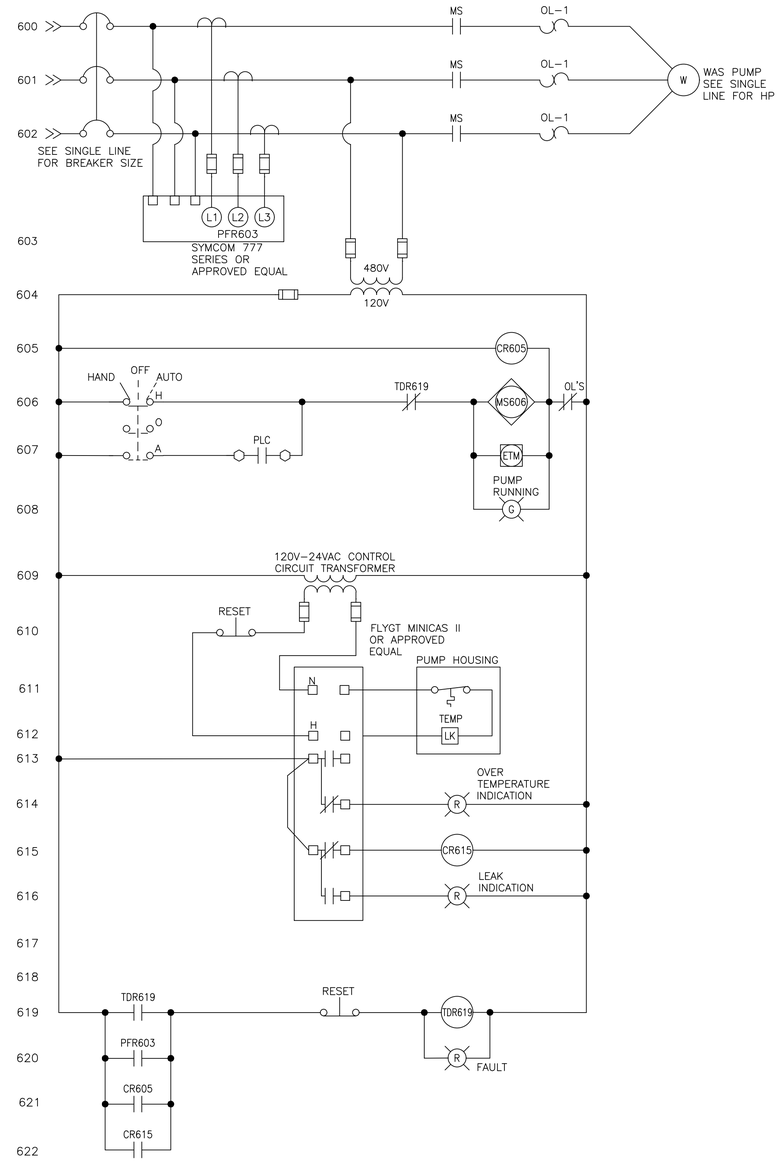

WAS PUMP #1 CONTROL SCHEMATIC

120V

NO	BY	DATE	REVISIONS	DATE	APP.

Registered Professional Engineer (Retired) Certificate No. 73954 JAMES BILLELIST ... Expires 9-30-27

PREPARED BY: WRIGHT ENGINEERING
DESIGNED BY: JHB
DRAWN BY: XAG
CHECKED BY: JHB
SCALE: AS NOTED
DATE: NOV 2025
JOB NO.: B614

THESE DRAWINGS ARE THE PROPERTY OF P.A.C.E. AND SHALL NOT BE REPRODUCED IN ANY MANNER NOR BE USED FOR CONSTRUCTION UNLESS STAMPED "ISSUED FOR CONSTRUCTION".

TITLE
ELECTRICAL SCHEMATICS II

JOB
TOWN OF JEROME
WASTEWATER
TREATMENT PLANT
YAVAPAI CO. AZ

ISSUED FOR BID

PREPARED BY:
PACE
Advanced Water Engineering
8723 E. VIA de COMERCIO, SUITE A, SCOTTSDALE, CA 85258
P. (480) 991-3595 | www.pacewater.com

SHEET
E5.2
91 OF 99 SHEETS

JOB NO. B614

WRIGHT engineering corporation
ELECTRICAL ENGINEERING AND DESIGN
165 EAST CHILTON DRIVE
CHANDLER, ARIZONA 85225
PHONE: 480.497.5829
FAX: 480.497.5807
www.wrightengineering.us
Wright Project # 23319

CALL TWO WORKING DAYS BEFORE YOU DIG
602-263-1100
1-800-STAKE-IT
(OUTSIDE MARICOPA COUNTY)

X:\2025\25-Current WWTP\25-E.dwg, Tab: E5.2, by jessie on 11/04/25 at 8:46:43 PM

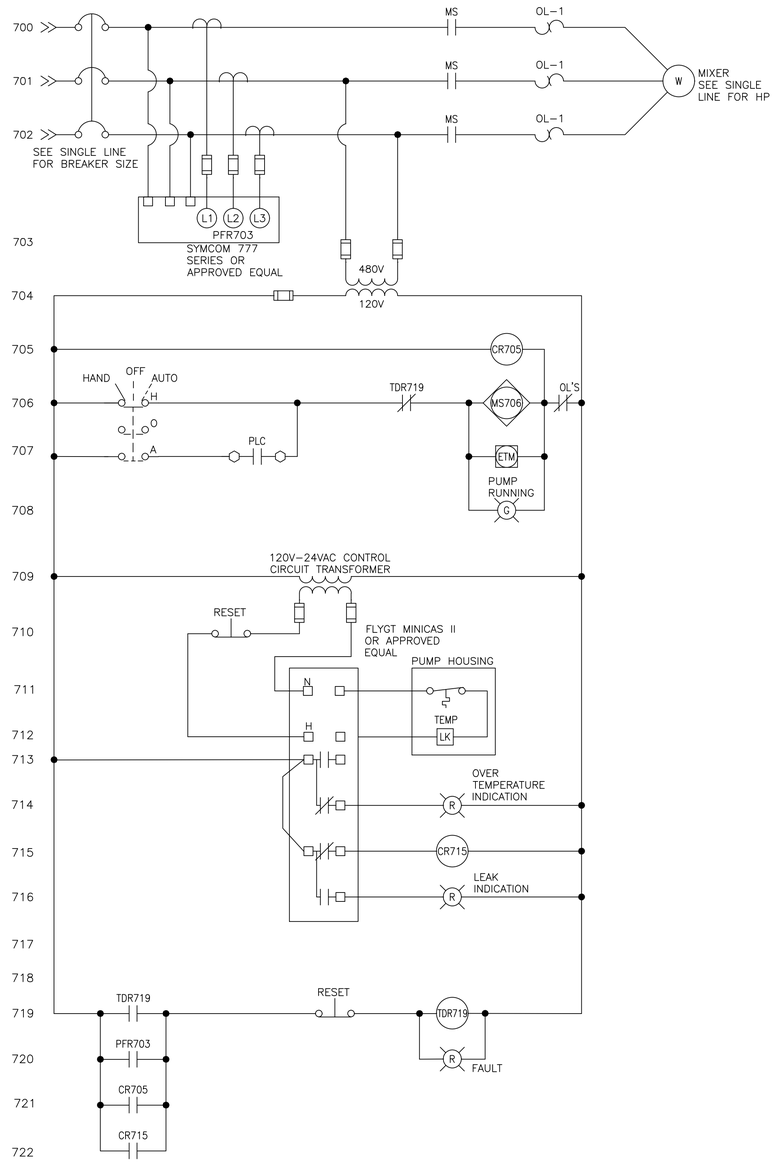

MIXER #2 CONTROL SCHEMATIC

120V

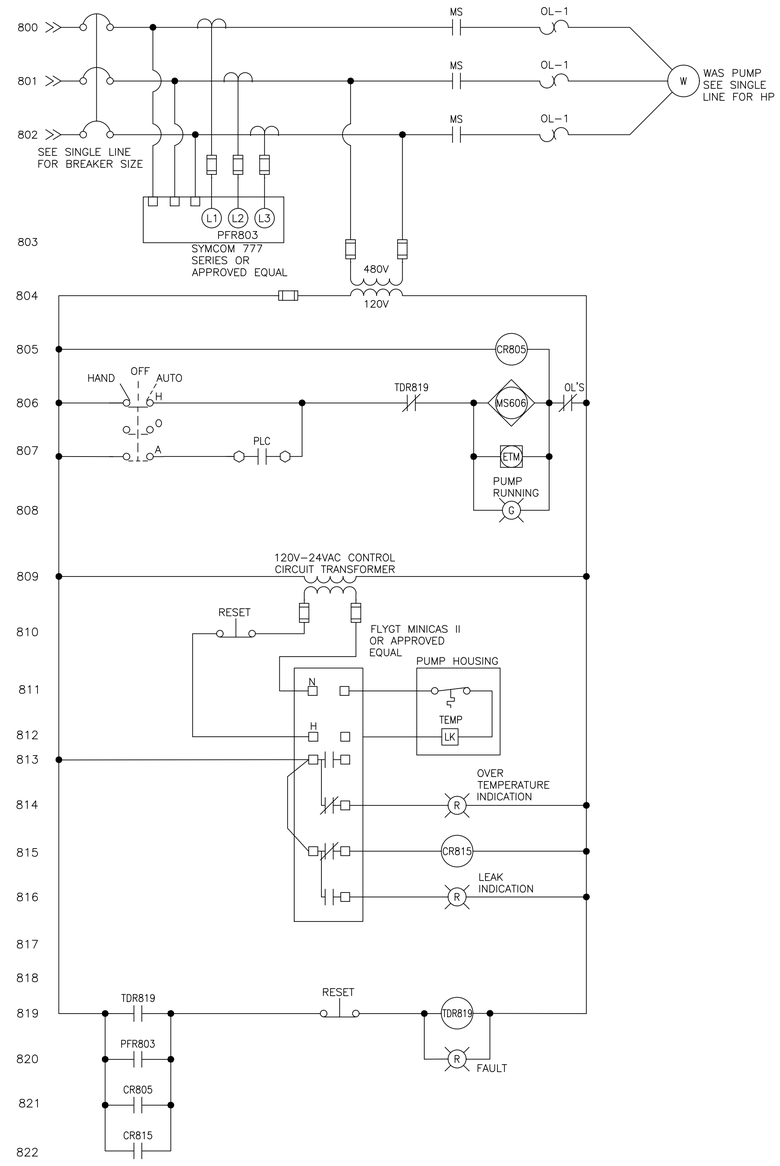

WAS PUMP #2 CONTROL SCHEMATIC

120V

NO	BY	DATE	REVISIONS	DATE	APP.

Registered Professional Engineer (Electrical)
Certificate No. 73954
JASON
BILLSTEDT
Date Signed 9-30-25
Expires 9-30-27

PREPARED BY: WRIGHT ENGINEERING
DESIGNED BY: JHB
DRAWN BY: XAG
CHECKED BY: JHB
DATE: NOV 2025
JOB NO.: B614
SCALE: AS NOTED

THESE DRAWINGS ARE THE PROPERTY OF P.A.C.E. AND SHALL NOT BE REPRODUCED IN ANY MANNER NOR BE USED FOR CONSTRUCTION UNLESS STAMPED "ISSUED FOR CONSTRUCTION".

TITLE
ELECTRICAL SCHEMATICS III

JOB
TOWN OF JEROME
WASTEWATER
TREATMENT PLANT
YAVAPAI CO. AZ

ISSUED FOR BID

PREPARED BY:
PACE
Advanced Water Engineering
8723 E. VIA DE COMMERCIO, 1ST FLOOR, SCOTTSDALE, CA 85258
P.: (408) 991-3595 | www.pacewater.com

SHEET
E5.3
92 OF 99 SHEETS

JOB NO. B614

WRIGHT engineering corporation
ELECTRICAL ENGINEERING AND DESIGN
165 EAST CHILTON DRIVE
CHANDLER, ARIZONA 85225
PHONE: 480.497.5829
FAX: 480.497.5807
www.wrightengineering.us
Wright Project # 23319

CALL TWO WORKING DAYS
BEFORE YOU DIG
602-263-1100
1-800-STAKE-IT
(OUTSIDE MARICOPA COUNTY)

X:\2025\25-Current WWTP\25-E.dwg, Tab: E5.3, by jason.xin 11/04/25 at 01:40 PM

INSTRUMENT IDENTIFICATION LETTERS (FSS)

	FIRST – LETTER (F)		SUCCEEDING – LETTERS (SS)		
	MEASURED OF INITIATING VARIABLE	MODIFIER	READOUT PASSIVE FUNCTION	OUTPUT FUNCTION	MODIFIER
A	ANALYSIS		ALARM		
B	BURNER, COMBUSTION		USER'S CHOICE	USER'S CHOICE	USER'S CHOICE
C	CONDUCTIVITY			CONTROLLER	
D	DENSITY	DIFFERENTIAL			
E	VOLTAGE		SENSOR, PRIMARY ELEMENT		
F	FLOW RATE	RATIO (FRACTION)			
G	GAUGE, GENERAL		GLASS VIEWING DEVICE		
H	HAND				HIGH, OPENED
I	CURRENT (ELEC.)		INDICATING, INDICATOR		
J	POWER		SCAN		
K	TIME, TIME SCHEDULE	TIME RATE OF CHANGE		CONTROL STATION	
L	LEVEL		LIGHT		LOW, CLOSED
M	MOISTURE, MOTION	MOMENTARY			MIDDLE
N	INTRUSION, STATUS	MOMENTARY	STATUS	USER'S CHOICE	USER'S CHOICE
O	OPERATOR, TORQUE		ORIFICE, RESTRICTION		USER'S CHOICE
P	PRESSURE, VACUUM		POINT (TEST) CONNECTION		
Q	QUANTITY	INTEGRATE, TOTALIZE			
R	RESET, RADIATION		RECORD OR PRINT		
S	SPEED, FREQUENCY	SAFETY		SWITCH	SLOW
T	TEMPERATURE			TRANSDUCER, TRANSMITTER	TEST
U	MULTIVARIABLE		MULTIFUNCTION	MULTIFUNCTION	MULTIFUNCTION
V	VIBRATION, MECH. ANALYSIS			VALVE, DAMPER LOUVER	
W	WEIGHT, FORCE		WELL		
X	SWITCH	X AXIS	UNCLASSIFIED	UNCLASSIFIED	UNCLASSIFIED
Y	EVENT, STATE, PRESENCE	Y AXIS	UNCLASSIFIED	RELAY, COMPUTE, CONVERT	
Z	POSITION DIMENSION	Z AXIS		DRIVER, ACTUATOR, UNCLASSIFIED FINAL CONTROL ELEMENT	

LINE NUMBERING

00" – INFLT – 001 (EXAMPLE)
- SEQUENTIAL LINE NO.
- FLUID CODE
- NOMINAL LINE SIZE

EQUIPMENT NUMBERING

F SS – PP T NN (EXAMPLE)
- ITEM NUMBER
- SERIES (TRAIN) LOCATION
- PROCESS LOCATION
- SUCCEEDING LETTERS (INSTRUMENT ID)
- FIRST LETTER (INSTRUMENT ID)

EXAMPLE:
LT-04032 = SBR TANK #2 LEVEL TRANSDUCER

PROCESS LOCATION (PP)		SERIES LOCATION (TT)	
00	GENERAL/MISCELLANEOUS	0	SHEET 0
01	FIELD	1	SHEET 1
02	POTABLE WATER	2	SHEET 2
03	HEADWORKS	3	SHEET 3
04	SBR AERATION	4	SHEET 4
05	SBR PROCESS	5	SHEET 5
06	DISINFECTION	6	SHEET 6
07	RETURN PS	7	SHEET 7
08	DEWATERING	8	SHEET 8

FLUID CODE ABBREVIATION		EQUIPMENT NUMBERS	
		EQUIPMENT ABBREVIATIONS	# STARTING AT
BP	BYPASS		
BW	BACKWASH		
CDS	CHEMICAL DOSING		
CVR	CONVEYOR	PUMPS (PMP)	00–09
DR	DRAIN	MOTORS (M/MXR/BLR)	10–19
EFFLT	EFFLUENT	VALVES (XV/V/SV)	20–29
EXH	EXHAUST/EXHAUST FAN	LEVEL INST (LT/LS)	30–39
FA	FOUL AIR	FLOW INST (FT/FS/FE/FIT)	40–49
FLTRT	FILTRATE	PRESSURE INST (PT/PS/PG)	50–59
GRT	GRIT	ANALYTICAL (AT)	60–69
INFLT	INFLUENT	MEMBRANE (SMU)	70–79
MLSS	MIX LIQUOR	BUBBLE DIFFUSER (XBD)	80–85
OF	OVERFLOW	MISCELLANEOUS (MISC)	90–99
PA	PROCESS AIR		
PW	POTABLE WATER		
RAS	RETURN ACTIVATED SLUDGE		
RECYC	RECYCLE		
RET	RETURN		
RNS	RINSE		
RW	RECLAIMED WATER		
SECPR	SECONDARY PROCESS		
SD	SLUDGE DISCHARGE		
SNT	SUPERNATANT		
SWR	SEWER		
TERT	TERTIARY		
TW	TREATED WATER		
WAS	WASTE ACTIVATED SLUDGE		
WTR	WATER		
WW	WASTE WATER		

GENERAL INSTRUMENT OR FUNCTION SYMBOLS

	FIELD MOUNTED	PRIMARY LOCATION ACCESSIBLE TO OPERATOR	PRIMARY LOCATION INACCESSIBLE TO OPERATOR	AUXILIARY LOCATION ACCESSIBLE TO OPERATOR
DISCRETE INSTRUMENTS	○	⊖	⊖	⊖
SHARED DISPLAY SHARED CONTROL	○	⊖	⊖	⊖
COMPUTER FUNCTION	⬡	⬡	⬡	⬡
PROGRAMMABLE LOGIC CONTROL	◇	◇	◇	◇

HARDWARE INTERLOCK (I)

PLC "SOFT" INTERLOCK (I)

VALVE SYMBOLS

NC NO
- GATE VALVE
- GATE VALVE
- BALL VALVE
- DIAPHRAGM VALVE
- PLUG VALVE
- 3-WAY BALL VALVE
- NEEDLE VALVE/KNIFE GATE
- MUD VALVE
- FLANGED BUTTERFLY VALVE
- LUGGED BUTTERFLY VALVE
- CHECK VALVE
- DOUBLE LEAF CHECK VALVE
- WEIR GATE/TELESCOPE VALVE
- STOP LOG/GATE
- SLUICE/SLIDE GATE

VALVE ACTUATORS

- DIAPHRAGM ACTUATOR
- MOTOR ACTUATOR (M)
- SOLENOID ACTUATOR (S)
- CYLINDER ACTUATOR
- LEVER
- HAND WHEEL
- CHAIN WHEEL

RELIEF DEVICES

- AIR/PRESSURE RELIEF
- VACUUM RELIEF
- RUPTURE DISK FOR PRESSURE RELIEF
- RUPTURE DISK FOR VACUUM RELIEF

REGULATORS

- PRESSURE REDUCING
- BACK PRESSURE
- REGULATOR WITH EXTERNAL PILOT
- DIFFERENTIAL PRESSURE

PIPING SYMBOLS

- Y STRAINER
- BLIND FLANGE
- FUNNEL
- CONCENTRIC REDUCER
- ECCENTRIC REDUCER
- EDUCTOR
- WELDED CAP
- WELDED PIPE END
- SCREWED CAP
- UNION
- CAMLOCK FITTING
- FLEXIBLE LINE
- SPECTACLE BLIND
- EXPANSION JOINT
- TP XX — TIE-IN POINT
- FLEX JOINT

MECHANICAL EQUIPMENT

- METERING PUMP
- CENTRIFUGAL PUMP OR BLOWER
- SUBMERSIBLE PUMP
- TURBINE PUMP
- ROTARY BLOWER
- MIXER
- PROGRESSIVE CAVITY PUMP
- AERATOR
- EXHAUST FAN
- VERTICAL MULTI-STAGE PUMP
- ROTARY LOBE PUMP
- DECANTER
- ULTRA SONIC LEVEL TRANSMITTER
- CHEMICAL INJECTOR
- FLOW METER OR MOTOR
- ROTOMETER
- MAZZI INJECTOR
- VORTEX SHEDDING
- SONIC
- GRINDER
- STATIC MIXER
- SILENCER
- RADAR LEVEL TRANSMITTER
- AV SENSOR
- HORN/STROBE LIGHT (H/S)

NOTE: ALL PRESSURE GAUGES AND OTHER SMALL PROCESS MECHANICAL INSTRUMENT EQUIPMENT SHALL BE SUPPLIED WITH ISOLATION VALVES AND ADDITIONAL APPURTENANCES (E.G. PRESSURE PULSATION DAMPENERS/SNUBBERS) AS REQUIRED FOR PROPER OPERATION

ABBREVIATIONS

ACP	ACCESS CONTROL PANEL	NTU	TURBIDITY
AE	ANALYTICAL SENSOR	OC	ODOR CONTROL
AI	ANALOG INPUT	OCA	OPEN–CLOSE–AUTO
AIT	ANALYTICAL INDICATOR TRANSMITTER	OCR	OPEN–CLOSE–REMOTE
AMP	AMPERE	OFS	OFF SPEC.
AO	ANALOG OUTPUT	OIT	OPERATOR INTERFACE TERMINAL
AT	ANALYTICAL TRANSMITTER	OO	ON/OFF (MAINTAINED)
ATS	AUTOMATIC TRANSFER SWITCH	OOA	ON–OFF–AUTO
AV	AIR VELOCITY	OOR	ON–OFF–REMOTE
BLR	BLOWER	OSC	OPEN–STOP–CLOSE
CB	CIRCUIT BREAKER	PE	PRESSURE SENSOR
CBL	COARSE BUBBLE DIFFUSER	PG	PRESSURE GAUGE
CE	CONDUCTIVITY SENSOR (TDS)	PH	POTENTIAL OF HYDROGEN
CFR	CHEMICAL FEEDER	PI	PRESSURE INDICATOR / PULSE INPUT
CG	COMBUSTIBLE GASES	PID	PROPORTIONAL–INTEGRAL–DERIVATIVE
CHV	CHECK VALVE	PIT	PRESSURE INDICATOR TRANSMITTER
CL2	CHLORINE	PLC	PROGRAMMABLE LOGIC CONTROLLER
CMP	COMPACTOR	PMP	PUMP
CON	CONVEYOR	PNL	PANEL
CWC	COMPACTOR/WASHER/CONVEYOR	PO	PULSE OUTPUT
DCS	DISTRIBUTED CONTROL SYSTEM	PPG	POUNDS PER GALLON
DI	DIGITAL INPUT	PPH	POUNDS PER HOUR
DO	DISSOLVED OXYGEN / DIGITAL OUTPUT	PPM	PARTS PER MILLION
DRY	BIOSOLIDS DRYER	PRESS	PRESSURE
DSS	DISTRIBUTION SWITCHBOARD SECTION	PRV	PRESSURE RELIEF OR REDUCING VALVE
DWG	DRAWING	PSH	PRESSURE SWITCH HIGH
EST	EMERGENCY STOP	PSI	POUNDS PER SQUARE INCH
ETM	ELAPSED TIME METER	PSL	PRESSURE SWITCH LOW
EXIST	EXISTING	PT	PRESSURE TRANSMITTER
FBD	FINE BUBBLE DIFFUSER	PV	PROCESS VARIABLE
FC	FAIL CLOSED	REM	REMOTE
FCV	MODULATING CONTROL VALVE	RF	RADIO FREQUENCY
FE	FLOW SENSOR	RIO	REMOTE INPUT–OUTPUT
FeCL2	FERROUS CHLORIDE	RST	RESET
FI	FLOW INDICATOR	RTU	REMOTE TELEMETRY UNIT
FIT	FLOW INDICATOR TRANSMITTER	SES	SERVICE ENTRANCE SECTION
FR	FORWARD–REVERSE	SG	SLUICE GATE
FS	FINE SCREEN / FULL SPEED	SLC	SINGLE LOOP CONTROLLER
FSL	FLOW SWITCH LOW	SLOS	START–LOCK–OFF–STOP
FT	FLOW TRANSMITTER	SO2	SULFUR D
GDR	GRINDER	SMU	SUBMERGED MEMBRANE UNIT
GPD	GALLONS PER DAY	SP	SETPOINT
GPH	GALLONS PER HOUR	SPD	SPEED
GPM	GALLONS PER MINUTE	SPR	SPARE
GRC	GRIT CLASSIFIER	SS	START/STOP (MAINTAINED)
H_2S	HYDROGEN SULFIDE	SSS	SOLID STATE STARTER (SOFT START)
HMI	HUMAN MACHINE INTERFACE	STG	MANUAL STOP GATE
HOA	HAND–OFF–AUTO	SUG	SLUICE GATE
HOR	HAND–OFF–REMOTE	SV	SOLENOID VALVE
JB	JUNCTION BOX	TC	TABLET CHLORINATOR
KGV	KNIFE GATE VALVE	TDS	TOTAL DISSOLVED SOLIDS
LAN	LOCAL AREA NETWORK	TE	TEMPERATURE SENSOR
LCP	LOCAL CONTROL PANEL	TG	TEMPERATURE GAUGE
LE	LEVEL SENSOR	TI	TEMPERATURE INDICATOR
LIT	LEVEL INDICATOR TRANSMITTER	TIT	TEMPERATURE INDICATOR TRANSMITTER
LOS	LOCK–OFF–STOP	TNK	TANK
LR	LOCAL / REMOTE	TS	TEMPERATURE SWITCH
LSH	LEVEL SWITCH HIGH	TSH	TEMPERATURE SWITCH HIGH
LSHH	LEVEL SWITCH HIGH HIGH	TT	TEMPERATURE TRANSMITTER
LSL	LEVEL SWITCH LOW	TV	TELESCOPING VALVE
LSLL	LEVEL SWITCH LOW LOW	UPS	UNINTERRUPTIBLE POWER SUPPLY
LSM	LEVEL SWITCH MEDIUM	UVU	ULTRAVIOLET UNIT
LT	LEVEL TRANSMITTER	V	MANUAL VALVE
MCAS	MINI CONTROL AND STATUS	VFD	VARIABLE FREQUENCY DRIVE
MCC	MOTOR CONTROL CENTER	WE	WEIR
ME	MOISTURE SENSOR	WEG	WEIR GATE
MGD	MILLION GALLONS PER DAY	WR	ADJUSTABLE WEIR
MGL	MILLIGRAM PER LITER	XV	AUTOMATED OPEN/CLOSE VALVE/GATE
MOT	MOTOR	ZS	SWITCH POSITION
MS	MOTOR STARTER		
MTU	MASTER TELEMETRY UNIT		
MXR	MIXER		
NaHSO3	SODIUM BISULFITE		
NaOCL	SODIUM HYPOCHLORITE		

LINE CODES

- MAJOR PROCESS LINE
- MINOR PROCESS LINE
- AIR
- ELECTRICAL
- PLC TO HMI COMMUNICATION
- AUTO–DIALER AND PRIORITY LEVEL

00"–XXX — LINE SIZE & NUMBER

PROCESS CONTINUATION WITHIN SCOPE

INSTRUMENT NUMBERING

FSS NPPNNN — XX – DEVICE FUNCTION
- FIRST LETTER (INSTRUMENT ID)
- SUCCEEDING LETTERS (INSTRUMENT ID)
- EQUIPMENT NUMBER

LINE NUMBER GROUPS

000	OVERFLOW/ BYPASS/ DRAIN/ SUPERNATANT/SCNG
100	INFLUENT/ MIX LIQUOR/ SECONDARY EFFLUENT / EFFLUENT
200	TERTIARY/ REUSE WATER/ BACKWASH/ RECYCLE WATER
300	PERMEATE/ FILTRATE/ CENTRATE
400	PROCESS AIR
500	CHEMICAL DOSING/ POLYMER
600	FOUL AIR
700	WATER/ TREATED WATER/ FILTERED WATER
800	RAS/ SOLIDS
900	WAS/ SCUM/ WASTE WATER/ RAW WATER

EQUIPMENT SUPPLIED BY IDENTIFIER

✳ AQUA–AEROBICS

NO	BY	DATE	REVISIONS	DATE	APP.

THESE DRAWINGS ARE THE PROPERTY OF P.A.C.E. AND SHALL NOT BE REPRODUCED IN ANY MANNER NOR BE USED FOR CONSTRUCTION UNLESS STAMPED 'ISSUED FOR CONSTRUCTION'.

Registered Professional Engineer (Civil) CERTIFICATE NO. 70097 Signed 12/31/25 ARIZONA, U.S.A. Expires 12/31/28

PREPARED BY: PACE
DESIGNED BY: NE
DRAWN BY: DS, WW
CHECKED BY: TP
SCALE: AS NOTED
DATE: NOV 2025
JOB NO.: B614

TITLE: **P&ID GENERAL NOTES**

JOB: TOWN OF JEROME WASTEWATER TREATMENT PLANT — YAVAPAI CO. AZ

100% ISSUED FOR BID

PREPARED BY: TAYLOR B. PIERCE — R.C.E 70097 — DATE

PACE
Advanced Water Engineering
8723 E. Via de Ventura, Suite F-200, SCOTTSDALE, CA 85258
P: (480) 991-3995 | www.pacewater.com

SHEET **I0.0**
93 OF 99 SHEETS

JOB NO. B614

W:\B614\Engineering\B614-30\sheets\B614-I0.1 GENERAL.dwg - Tab: B614-I0.0 GENERAL - by nsddingson on 12/17/25 at 9:55:33 AM

AUTO-DIALER

PRIORITY NO. ALARM
NOTIFICATION

SCREEN

FAIL ALARM YA 03010

FAIL Y1 03010

HMI

HMI

FAIL Y1 03010

SBR CONTROL PANEL (VENDOR)

SBR CONTROL PANEL (VENDOR)

(480 VAC) CB

MCC

MCC

MS 03010 POT/HIM
HS 03010A HOA
MS 03010B POT/HIM
HS 03010B HOA
MS 03010C POT/HIM
HS 03010C HOA
G RUNNING
Y FAULT
ETM
HEADWORKS CONTROL PANEL

SEWER MAIN FROM COLLECTION SYSTEM
12"-SWR-101

ROCK TRAP

8"-SWR-102

EST 03010A
M-03010A
LE-03031
LE-03032
EST 03010B
M-03010B
LE-03033
LE-03034

PV-03021
PV-03022

CLIMBER BAR SCREENS

10"-INFLT-103
A SCREENED INFLUENT TO SBR REF SHT I1.1

ZSO 03023
ZSC 03023
HS 03023
SV 03023

POTABLE WATER FROM TOWN
2"-WTR-701

V-02020

A DRYING BED LIFT STATION RETURN REF SHT I1.4
3"-DR RET-001

CV-07020

BV-07021

EST 03010C
M-03010C

1"-DR-005

DISPOSAL

HEADWORKS

W:\B614\Engineering\B614-30sheets\B614-I1.1.dwg - Tab: I1.0 - by naddington on 11/17/25 at 9:55:57 AM

NO	BY	DATE	REVISIONS	DATE	APP.

Registered Professional Engineer (Civil)
CERTIFICATE NO. 70097
Timothy B. Pierce
Signed
ARIZONA, U.S.A.
Expires 12/31/28

PREPARED BY: PACE
DESIGNED BY: NE
DRAWN BY: DS, WW
CHECKED BY: TP
SCALE: AS NOTED
DATE: NOV 2025
JOB NO: B614

THESE DRAWINGS ARE THE PROPERTY OF P.A.C.E. AND SHALL NOT BE REPRODUCED IN ANY MANNER NOR BE USED FOR CONSTRUCTION UNLESS STAMPED "ISSUED FOR CONSTRUCTION".

100% ISSUED FOR BID

PREPARED BY: TAYLOR B. PIERCE R.C.E 70097 DATE

PACE
Advanced Water Engineering
8723 E. Via de Ventura, Suite 130 SCOTTSDALE, CA 85258
P: (480) 991-3995 | www.paceaz.com

TITLE: HEADWORKS

JOB: TOWN OF JEROME
WASTEWATER
TREATMENT PLANT
YAVAPAI CO. AZ

SHEET
I1.0
94 OF 99 SHEETS

JOB NO. B614

HEADWORKS

AUTO-DIALER

PRIORITY NO. ALARM NOTIFICATION

SBR INFLUENT VALVE (1) | SBR #1 MIXER (2) | SBR #1 LEVEL (1)(1)(1)(1) | SBR #1 DO (2)(2) | WAS PUMP #1 (1) | DECANTER (1) | DECANT VALVE (1)

HMI

FAIL ALARM YA 05120 — OPEN YI 05120 — CLOSE YI 05120
FAIL ALARM YA 05110 — RUNNING YI 05110 — AUTO POS. YI 05110
HIGH ALARM LAH 05130 — LOW ALARM LAL 05130 — LEVEL LIR 05130 FT
HIGH ALARM LAH 05131 A — LOW ALARM LAL 05131 B
HIGH ALARM LAH 05160 A — LOW ALARM LAL 05160 A — DO AIR 05160 A mg/L
FAIL ALARM YA 05100 — RUNNING YI 05100 — AUTO POS. ZI 05100
FAIL ALARM YA 05111 — OPEN YI 05111 — CLOSE YI 05111
% OPEN YA 05121 — FAIL ALARM YA 05121 — % OPEN YI 05121 — CLOSED YIC 05121

OPEN YO 05120 — CLOSE YC 05120 — OPEN YI 05120 — CLOSE YI 05120 — DO — DO — DI — DI
RUN YC 05110 — RUNNING YI 05110 — AUTO POS. YI 05110 — DO — DI — DI
LEVEL LIR 05130 FT — AI
HIGH LEVEL LI 05131 A — LOW LEVEL LI 05131 B — DI — DI
DO AIR 05160 A mg/L — AI
RUN YC 05100 — RUNNING YI 05100 — AUTO POS. ZI 05100 — DO — DI — DI
OPEN YO 05111 — CLOSE YC 05111 — OPEN YI 05111 — CLOSE YI 05111 — DO — DO — DI — DI
% OPEN SC 05121 — CLOSE YO 05121 — % OPENED YI 05121 — CLOSED YIC 05121 — AO — AO — AI — AI

(120 VAC) CB — (120 VAC) CB — (480 VAC) CB

SBR CONTROL PANEL (VENDOR)

RTM 05110 — MS 05110 — HS 05110 HOA — TS 05110 TEMP — MA 05110 LEAK
MA 05100 LEAK — TS 05100 TEMP — MS 05100 — HS 05100 HOA

MCC

B — PROCESS AIR FROM BLOWER BUILDING — 4"-PA-402 — REF SHT I1.3
A — PROCESS AIR FROM BLOWER BUILDING — 4"-PA-401 — REF SHT I1.3
A — SCREENED INFLUENT FROM HEADWORKS — 10"-INFLT-103 — REF SHT I1.0
C — SUPERNATANT FROM AEROBIC DIGESTER — 6"-SNT-003 — REF SHT I1.2

SAME AS SBR #1

2"-WAS-901 — A — WASTE SLUDGE TO AEROBIC DIGESTER — REF SHT I1.2

SBR INFLUENT VALVE 1: HS 05120 — ZSO 05120 — ZSC 05120 — PV 05120 — BFV-04326A 4"x3" — BFV-04326B 4"x3" — PV-05120
SBR INFLUENT VALVE 2: HS 05122 — ZSO 05122 — ZSC 05122 — PV 05122 — BFV-04327A 4"x3" — BFV-04327B 4"x3" — PV-05122

3"-PA-404 — 3"-PA-405 — 3"-PA-406 — 3"-PA-407

LE 05130 — LSH 05131A — LSL 05131B — AT 05160A — AE 05160B DO
LE 05132 — LSH 05133A — LSL 05133B — AT 05161A — AE 05161B DO

SBR DECANTER 1 M-05111 — BFV 05121 — ZSO 05121 — ZSC 05121 — HS 05121 — BFV-05121
SBR DECANTER 2 M-05113 — BFV 05123 — ZSO 05123 — ZSC 05123 — HS 05123 — BFV-05123

SBR MIXER 1 MXR-05110 — ME 05110 LEAK — TE 05110 TEMP
SBR MIXER 2 MXR-05112 — ME 05112 LEAK — TE 05112 TEMP

ME 05100 LEAK — TE 05100 TEMP — WAS PUMP 1 PMP-05100
ME 05101 LEAK — TE 05101 TEMP — WAS PUMP 2 PMP-05101

FBD-04180 — SBR 1 — V-08120 — PV-08122
FBD-04181 — SBR 2 — V-08121 — PV-08123

6"-EFFLT-104 — B — EFFLUENT TO SURGE BASIN — REF SHT I1.2
6"-OF-002 — C — OVERFLOW TO DRYING BED LIFT STATION — REF SHT I1.4
6"-WAS-902 — D — WASTE SLUDGE TO DEWATERING — REF SHT I1.4

SEQUENCING BATCH REACTOR

NO	BY	DATE	REVISIONS	DATE	APP.

Registered Professional Engineer (Civil) — CERTIFICATE NO. 70097 — Timothy B. Pierce — Signed — ARIZONA, U.S.A. — Expires 12/31/28

PREPARED BY: PACE
DESIGNED BY: NE
DRAWN BY: DS, WW
CHECKED BY: TP
SCALE: AS NOTED
DATE: NOV 2025
JOB NO.: B614

TITLE: SEQUENCING BATCH REACTOR

JOB: TOWN OF JEROME WASTEWATER TREATMENT PLANT — YAVAPAI CO. AZ

100% ISSUED FOR BID

PREPARED BY: TAYLOR B. PIERCE — R.C.E. 70097 — DATE

PACE
Advanced Water Engineering
8723 E. VIA DE COMMERCIO, BLDG. 4, SUITE 4, SCOTTSDALE, CA 85258
P: (480) 991-3955 | www.paceaztr.com

SHEET I1.1
95 OF 99 SHEETS

JOB NO. B614

THESE DRAWINGS ARE THE PROPERTY OF P.A.C.E. AND SHALL NOT BE REPRODUCED IN ANY MANNER NOR BE USED FOR CONSTRUCTION UNLESS STAMPED "ISSUED FOR CONSTRUCTION".

W:\B614\Engineering\B614-30sheet\B614I1.1.dwg - Tab: I1.1 - by neddington on 11/17/25 at 8:55:57 AM

AUTO-DIALER

PRIORITY NO. ALARM NOTIFICATION

SURGE BASIN LEVEL

EFFLUENT FLOW METER

EFFLUENT DISCHARGE VALVE

DIGESTER LEVEL SWITCHES

HIGH ALARM LAH 05230 | HIGH ALARM LAH 05231 | % OPEN YA 05221 | FAIL ALARM YA 05221 | HIGH ALARM LAH 05232 | LOW ALARM LAL 05232 | HIGH ALARM LAH 05233

LEVEL LIR 05230 FT | HIGH LEVEL LI 05231 | GPM FIR 05240 GPM | TOTAL FQIR 05240 MG | % OPEN YI 05221 | CLOSED YIC 05221 | LEVEL LIR 05232 FT | HIGH LEVEL LI 05233

HMI

LEVEL LIR 05230 FT | HIGH LEVEL LI 05231 | GPM FI 05240 GPM | TOTAL FQI 05240 MG | % OPEN SC 05221 | CLOSE YO 05221 | % OPENED YI 05221 | CLOSED YIC 05221 | LEVEL LIR 05232 FT | HIGH LEVEL LI 05233

SBR CONTROL PANEL (VENDOR)

AI | DI | AI | AO | AO | AI | AI | AI | DI

(120 VAC) CB | (480 VAC) CB

MCC

C PROCESS AIR FROM BLOWER BUILDING REF SHT I1.3 — 2"-PA-403

A WASTE SLUDGE FROM SBR REF SHT I1.1 — 2"-WAS-901

LE 05232 | LSH 05233 | V-05220 | 6"-SNT-003 | C SUPERNATANT TO SBR 1 REF SHT I1.1

CBD-04280 | V-08220

AEROBIC DIGESTER

PV-08221 | 6"-SD-801 | A DIGESTED SLUDGE TO DEWATERING REF SHT I1.4

ZSO 06221 | ZSC 06221 | HS 06221 | BFV 06221

FT 06240 | FE 06240

LE 05230 | LSH 05231

B EFFLUENT FROM SBR REF SHT I1.1 — 6"-EFFLT-104

6"-EFFLT-105 | PV-06220 | FM-06240 | BFV-06221

CHLORINATION TABLET FEEDER

TAB-06290

V-06222 (WEIR SLIDE GATE)

DECHLORINATION TABLET FEEDER

TAB-06291

6"-EFFLT-106 | — TREATED EFFLUENT TO BITTER CREEK

SURGE BASIN

CHLORINE CONTACT BASIN

CHLORINE CONTACT AND DIGESTER

100% ISSUED FOR BID

PREPARED BY: TAYLOR B. PIERCE

PACE Advanced Water Engineering
8723 E. Via de Commercio, Suite 104, SCOTTSDALE, CA 85258
P: (408) 991-3595 | www.pacewater.com
R.C.E 70097 DATE

NO	BY	DATE	REVISIONS	DATE	APP.

Registered Professional Engineer (Civil) CERTIFICATE NO. 70097 Timothy B. Pierce Signed ARIZONA, U.S.A. Expires 12/31/28

THESE DRAWINGS ARE THE PROPERTY OF P.A.C.E. AND SHALL NOT BE REPRODUCED IN ANY MANNER NOR BE USED FOR CONSTRUCTION UNLESS STAMPED "ISSUED FOR CONSTRUCTION".

PREPARED BY: PACE
DESIGNED BY: NE
DRAWN BY: DS, WW
CHECKED BY: TP
SCALE: AS NOTED
DATE: NOV 2025
JOB NO.: B614

TITLE: CHLORINE CONTACT & DIGESTER

JOB: TOWN OF JEROME WASTEWATER TREATMENT PLANT — YAVAPAI CO. AZ

SHEET I1.2
96 OF 99 SHEETS

JOB NO. B614

W:\B614\Engineering\B614-Sheets\B614-I1.1.dwg - Tab: I1.2 - by reddington on 11/17/25 at 9:55:57 AM

AUTO-DIALER

PRIORITY NO. 1 ALARM NOTIFICATION

AERATION BLOWER #1 | AERATION BLOWER #2 | AERATION BLOWER #3 | DIGESTER BLOWER #1 | SBR #1 AIR VALVE | SBR #2 AIR VALVE

HMI

SBR CONTROL PANEL (VENDOR)

MCC

NOTE:
CONTRACTOR TO REVIEW SHOP DRAWINGS FROM EQUIPMENT MANUFACTURER FOR SIZE, NUMBER AND SCOPE OF SUPPLY OF VALVES AND INSTRUMENTS.

BLOWER 1: AMBIENT AIR → ENCLOSURE AIR FILTER → BLR-04310 → PT 04310 / TT 04310 → BLOW OFF VALVE → CV-04320A → BFV-04320B → 3" → 6" → 6"x4" → BFV-04325A → ZSO 04325A / ZSC 04325A / XV 04325A → 4"-PA-401 → A PROCESS AIR TO SBR 1 REF SHT I1.1

BLOWER 2: AMBIENT AIR → ENCLOSURE AIR FILTER → BLR-04311 → PT 04311 / TT 04311 → BLOW OFF VALVE → CV-04321A → BFV-04321B → 3"

BLOWER 3: AMBIENT AIR → ENCLOSURE AIR FILTER → BLR-04312 → PT 04312 / TT 04312 → BLOW OFF VALVE → CV-04322A → BFV-04322B → 3" → 2"x6" → BFV-04524

BLOWER 4: AMBIENT AIR → ENCLOSURE AIR FILTER → BLR-04313 → PT 04313 / TT 04313 → BLOW OFF VALVE → CV-04323A → BFV-04523B → 2" → 6"x4" → BFV-04325B → ZSO 04325B / ZSC 04325B / XV 04325B → 4"-PA-402 → B PROCESS AIR TO SBR 2 REF SHT I1.1

→ 2"-PA-403 → C PROCESS AIR TO AEROBIC DIGESTER REF SHT I1.2

BLOWER ROOM

100% ISSUED FOR BID

NO	BY	DATE	REVISIONS	DATE	APP.

Registered Professional Engineer (Civil) CERTIFICATE NO. 70097 Nicholas E. Ellsworth Signed 12/31/25 ARIZONA U.S.A. Expires 12/31/28

PREPARED BY: PACE
DESIGNED BY: NE
DRAWN BY: DS, WW
CHECKED BY: TP
SCALE: AS NOTED
DATE: NOV 2025
JOB NO.: B614

THESE DRAWINGS ARE THE PROPERTY OF P.A.C.E. AND SHALL NOT BE REPRODUCED IN ANY MANNER NOR BE USED FOR CONSTRUCTION UNLESS STAMPED 'ISSUED FOR CONSTRUCTION'.

TITLE: BLOWER ROOM

JOB: TOWN OF JEROME WASTEWATER TREATMENT PLANT — YAVAPAI CO. AZ

PREPARED BY: TAYLOR B. PIERCE — R.C.E 70097 — DATE
PACE Advanced Water Engineering
8723 E. Via de Commercio, Suite 104 | CONTROL | Tucson, AZ 85258
P: (480) 991-3995 | www.pacewater.com

SHEET I1.3
97 OF 99 SHEETS

JOB NO. B614

W:\B614\Engineering\B614-30\sheets\B614-I1.1.dwg - Tab: I1.3 - by reddington on 11/17/25 at 9:35:57 AM

AUTO-DIALER

PRIORITY NO. ALARM NOTIFICATION

DEWATERING FEED PUMP

SLUDGE FEED VALVE

DRYING BED LIFT STATION PUMPS

HMI

SBR CONTROL PANEL (VENDOR)

MCC

(480VAC) CB

(120 VAC) CB

FAIL ALARM YA 08400

RUNNING Y1 08400

RUN YC 08400

DI

DO

FAIL ALARM YA 08420B

OPEN Y1 08420B

CLOSE YC 08420B

FAIL ALARM YA 07400A

FAIL ALARM YA 07400B

RUNNING Y1 07400A

RUNNING Y1 07400B

SLUDGE BAGGING SYSTEM CONTROL PANEL

MS 08400 HOA

HS 08400 HOA

G RUNNING

Y FAULT

ETM

DRYING BED LIFT STATION CONTROL PANEL

MS 07400A HOA

HS 07400A HOA

MS 07400B HOA

HS 07400B HOA

OVERFLOW LIFT STATION CONTROL PANEL

HS 07401 HO

C OVERFLOW FROM SBR REF SHT I1.1

8"-OF-002

A DIGESTED SLUDGE FROM DIGESTER REF SHT I1.2

6"-SD-801

D WASTE SLUDGE FROM SBR 1 & 2 REF SHT I1.1

6"-WAS-902

— POTABLE WATER FROM TOWN

2"-PW-702

V-02420

PV-08421

6"x4"

PV-08420A

4"-WAS-903

PV-08420B

ZSO 08420B

ZSC 08420B

XV 08420B

PV-08422A

PV-08422B

SLUDGE DRYING BEDS

DISPOSAL

4"-FLTRT-302

4"-FLTRT-301

SLUDGE BAGGING UNIT BAG-08490

BV-08423

PMP-08400

MXR-08410

DRY POLYMER MIXING UNIT

BV-08425

CV-08424

1"-CDS-501

PMP-08401

ARV-07422

3"-DR RET-001

A OVERFLOW RETURN TO HEADWORKS REF SHT I1.0

LSHH 07430A

LSH 07430B

LSL 07430C

CV-07420A

V-07420B

CV-07421A

V-07421B

PMP-07400A

PMP-07400B

DRYING BED LIFT STATION

4"-OF-003

EMERGENCY OVERFLOW BASIN

ARV-07425

2"-OF RET-004

BV-07424

CV-07423

4"-OF-004

LSHH 07431A

LSL 07431B

PMP-07401

OVERFLOW LIFT STATION

DEWATERING AND LIFT STATIONS

100% ISSUED FOR BID

PREPARED BY: TAYLOR B. PIERCE R.C.E 70097 DATE

PACE Advanced Water Engineering
8723 E. Via de Commercio, Suite 1-1, Scottsdale, CA 85258
P: (480) 991-3595 | www.pacewater.com

TITLE: DEWATERING & LIFT STATIONS

JOB: TOWN OF JEROME WASTEWATER TREATMENT PLANT AZ
YAVAPAI CO.

SHEET I1.4
98 OF 99 SHEETS

JOB NO. B614

NO	BY	DATE	REVISIONS	DATE	APP.

Registered Professional Engineer (Civil) CERTIFICATE NO. 70097 Timothy B. Pierce Signed ARIZONA, U.S.A. Expires 12/31/28

PREPARED BY: PACE
DESIGNED BY: NE
DRAWN BY: DS, WW
CHECKED BY: TP
SCALE: AS NOTED
DATE: NOV 2025
JOB NO. B614

THESE DRAWINGS ARE THE PROPERTY OF P.A.C.E. AND SHALL NOT BE REPRODUCED IN ANY MANNER NOR BE USED FOR CONSTRUCTION UNLESS STAMPED "ISSUED FOR CONSTRUCTION".

V:\B614\Engineering\B614-30\sheets\B614-I1.1.dwg - Tab: I1.4 - by raddington on 11/17/25 at 9:55:57 AM

AUTO-DIALER

PRIORITY NO. ALARM NOTIFICATION

ATS

GENERATOR

FAULT ALARM YA 01003

LOW ALARM YA 01003

UTILITY SWITCH POSITION YI 01001

FAULT YI 01003

OFF / RUNNING YI 01003

LOW FUEL LEVEL YI 01003

HMI

HMI

UTILITY SWITCH POSITION YI 01001

FAULT YI 01003

OFF / RUNNING YI 01003

LOW FUEL LEVEL YI 01003

SBR CONTROL PANEL (VENDOR)

SBR CONTROL PANEL (VENDOR)

DI

DI

DI

DI

RUN R

FAIL A

I

MCC

MCC

(480 VAC) CB

C

C

C

C

C

E

E

LOCATED ON GENERATOR

ANNUNCIATOR

SWITCH POSITION

DI 01002

DO 01002

GEN RUN

EST 01000

C

ON-BOARD POWER ZONE

POWER FROM APS

C1

TRANSFORMER (BY UTILITY)

POWER TO E

SES

ATS

C CALL

GENERATOR

POWER TO E

SES, ATS, AND STAND-BY GENERATOR

100% ISSUED FOR BID

PREPARED BY: TAYLOR B. PIERCE R.C.E. 70097 DATE

PACE
Advanced Water Engineering
8723 E. VIA DE VENTURA, SUITE A, SCOTTSDALE, CA 85258
P: (480) 991-3595 | www.pacewater.com

JOB: TOWN OF JEROME WASTEWATER TREATMENT PLANT — YAVAPAI CO. AZ

TITLE: GENERATOR

SHEET I1.5

99 OF 99 SHEETS

JOB NO. B614

NO	BY	DATE	REVISIONS	DATE	APP.

Registered Professional Engineer (Civil) CERTIFICATE NO. 70097 TAYLOR B. PIERCE Signed ARIZONA, U.S.A. Expires 12/31/28

PREPARED BY: PACE
DESIGNED BY: NE
DRAWN BY: DS, WW
CHECKED BY: TP
SCALE: AS NOTED
DATE: NOV 2025
JOB NO.: B614

THESE DRAWINGS ARE THE PROPERTY OF P.A.C.E. AND SHALL NOT BE REPRODUCED IN ANY MANNER NOR BE USED FOR CONSTRUCTION UNLESS STAMPED 'ISSUED FOR CONSTRUCTION'.

W:\B614\Engineering\B614-30sheets\B614I1.1.dwg - Tab: I1.5 - by neddington on 11/17/25 at 8:55:57 AM

BID FORM FOR CONSTRUCTION CONTRACT
ADDENDUM 2 VERSION

Contractor Name: _____

The terms used in this Bid with initial capital letters have the meanings stated in the Instructions to Bidders, the General Conditions, and the Supplementary Conditions.

ARTICLE 1—OWNER AND BIDDER

1.01 This Bid is submitted to:

Town of Jerome
Submitted electronically via email to tpierce@pacewater.com. Alternatively, Bidder may submit a hard copy the Town of Jerome, 600 Clark Street, Jerome, AZ 86331.

The undersigned Bidder proposes and agrees, if this Bid is accepted, to enter into an Agreement with Owner in the form included in the Bidding Documents to perform all Work as specified or indicated in the Bidding Documents for the prices and within the times indicated in this Bid and in accordance with the other terms and conditions of the Bidding Documents.

ARTICLE 2—ATTACHMENTS TO THIS BID

2.01 The following documents are submitted with and made a condition of this Bid:

A. Required Bid security;

B. List of Proposed Subcontractors;

~~C. List of Proposed Suppliers;~~

D. Evidence of authority to do business in the state of the Project; or a written covenant to obtain such authority within the time for acceptance of Bids;

E. Contractor's license number as evidence of Bidder's State Contractor's License or a covenant by Bidder to obtain said license within the time for acceptance of Bids;

F. Required Bidder Qualification Statement with supporting data; ~~and~~

G. If Bid amount exceeds $10,000, signed Compliance Statement (RD 400-6). Refer to specific equal opportunity requirements set forth in the Supplementary Conditions of the Construction Contract (EJCDC C-800);

H. If Bid amount exceeds $25,000, signed Certification Regarding Debarment, Suspension, Ineligibility and Voluntary Exclusion - Lower Tier Covered Transactions (AD-1048);

I. If Bid amount exceeds $100,000, signed RD Instruction 1940-Q Exhibit A-1, Certification for Contracts, Grants, and Loans.

ARTICLE 3—BASIS OF BID—LUMP SUM BID AND UNIT PRICES

3.01 *Lump Sum Bids*

A. Bidder will complete the Work in accordance with the Contract Documents for the following lump sum (stipulated) price(s), together with any Unit Prices indicated in Paragraph 3.02:

Copyright© 2018 National Society of Professional Engineers, American Council of Engineering Companies, and American Society of Civil Engineers. All rights reserved.

1. Lump Sum Price (Base Bid and Alternates)

BASE BID LUMP SUM BREAKDOWN					
	Item Description	**Unit**	**Estimated Qty**	**Bid Unit Price**	**Total Bid Price**
1	**ACCESS ROAD & SITE WORK**				
1.1	SWPPP	LS	1	$	$
1.2	Access Road (cut, grading, paving)	CY	3,672	$	$
1.3	Roadway Appurtenance (guardrail, gates, catch basins)	LS	1	$	$
1.4	Traffic Control	LS	1	$	$
2	**12" SEWER LINE IMPROVEMENTS**				
2.1	12" FPVC New Sewer Main	LF	149	$	$
2.2	Sewer Road Alignment Cut to Fill	CY	498	$	$
2.3	48" Manholes	EA	2	$	$
2.4	Bypass Plumbing and Equipment	LS	1	$	$
3	**TREATMENT PLANT SITE**				
3.1	Survey, Staking & Materials Testing	LS	1	$	$
3.2	Clearing & Grubbing	LS	1	$	$
3.3	Earthwork (Shoring, Erosion Control & Final Site Grading)	LS	1	$	$
3.4	Earthwork (Excavation, Fill & Backfill)	CY	1,628	$	$
3.5	Yard Piping	LS	1	$	$

Copyright© 2018 National Society of Professional Engineers, American Council of Engineering Companies, and American Society of Civil Engineers. All rights reserved.

BASE BID LUMP SUM BREAKDOWN					
	Item Description	**Unit**	**Estimated Qty**	**Bid Unit Price**	**Total Bid Price**
3.6	Fencing	LF	150	$	$
3.7	Blower / Admin Building	SF	528	$	$
3.8	Reed Bed Conversion to Drying Beds	LS	1	$	$
3.9	Wetland Cells Conversion to Emergency Overflow	LS	1	$	$
3.10	Retaining Walls	LF	295	$	$
3.11	Structural Concrete (SBR Tanks, Site, Chlorine Contact Channel)	CY	275	$	$
3.12	SBR Equipment	LS	1	$	$
3.13	Headworks Equipment	LS	1	$	$
3.14	Sludge Bagging Unit	LS	1	$	$
3.15	Polymer Dosing System	LS	1	$	$
3.16	Sludge Feed Pump	LS	1	$	$
3.17	Shade Structure	LS	1	$	$
3.18	Disinfection & Miscellaneous Equipment	LS	1	$	$
3.19	Site Electrical and Standby Generator	LS	1	$	$

Copyright© 2018 National Society of Professional Engineers, American Council of Engineering Companies, and American Society of Civil Engineers. All rights reserved.

BASE BID LUMP SUM BREAKDOWN					
	Item Description	**Unit**	**Estimated Qty**	**Bid Unit Price**	**Total Bid Price**
3.20	Upgrade Site to 3 Phase Power	LS	1	$	$
4	**OTHER**				
4.1	Mobilization/Demobilization	LS	1	$	$
4.2	Taxes	LS	1	$	$
				TOTAL BASE BID LUMP SUM AMOUNT	$

BID ALTERNATES LUMP SUM BREAKDOWN					
NEW 12" SEWER AND ACCESS ROAD					
	Item Description	**Unit**	**Estimated Qty**	**Bid Unit Price**	**Total Bid Price**
1	**Bid Adder:** 12" FPVC New Sewer Main	LF	1,660	$	$
2	**Bid Adder:** Restore Lateral Connections	EA	5	$	$
3	**Bid Adder:** Sewer Road Alignment Cut to Fill	CY	4,010	$	$
4	**Bid Adder:** 48" Manholes	EA	10	$	$
5	**Bid Adder:** Rockfall Barrier	LF	150	$	$
				TOTAL ALTERNATES LUMP SUM AMOUNT	

Copyright© 2018 National Society of Professional Engineers, American Council of Engineering Companies, and American Society of Civil Engineers. All rights reserved.

TOTAL LUMP SUM PRICE (BASE BID AND ALTERNATES)		
	Item Description	**Total Bid Price**
1	Total Lump Sum for Base Bid	$
2	Total Lump Sum for Bid Adder: New 12" Sewer and Access Road	$
	TOTAL LUMP SUM BASE BID AND ALTERNATES PRICE	$

B. All specified cash allowance(s) are included in the price(s) set forth below, and have been computed in accordance with Paragraph 13.02 of the General Conditions.

TOTAL ALLOWANCE PRICE		
	Item Description	**Total Bid Price**
1	Materials Testing	$
	TOTAL ALLOWANCE PRICE	$

ARTICLE 4—DELETED

ARTICLE 5—DELETED

ARTICLE 6—TIME OF COMPLETION

6.01 Bidder agrees that the Work will be substantially complete and will be completed and ready for final payment in accordance with Paragraph 15.06 of the General Conditions on or before the dates or within the number of calendar days indicated in the Agreement.

6.02 **[Deleted]**

6.03 **[Deleted]**

6.04 Bidder accepts the provisions of the Agreement as to liquidated damages.

ARTICLE 7—BIDDER'S ACKNOWLEDGEMENTS: ACCEPTANCE PERIOD, INSTRUCTIONS, AND RECEIPT OF ADDENDA

7.01 *Bid Acceptance Period*

A. This Bid will remain subject to acceptance for 60 days after the Bid opening, or for such longer period of time that Bidder may agree to in writing upon request of Owner.

Copyright© 2018 National Society of Professional Engineers, American Council of Engineering Companies, and American Society of Civil Engineers. All rights reserved.

7.02 *Instructions to Bidders*

A. Bidder accepts all of the terms and conditions of the Instructions to Bidders, including without limitation those dealing with the disposition of Bid security.

7.03 *Receipt of Addenda*

A. Bidder hereby acknowledges receipt of the following Addenda:

Addendum Number	Addendum Date

7.04 **[Deleted]**

ARTICLE 8—BIDDER'S REPRESENTATIONS AND CERTIFICATIONS

8.01 *Bidder's Representations*

A. In submitting this Bid, Bidder represents the following:

1. Bidder has examined and carefully studied the Bidding Documents, including Addenda.

2. **[Deleted]**

3. Bidder is familiar with all Laws and Regulations that may affect cost, progress, and performance of the Work**, including all American Iron and Steel requirements.**

4. Bidder has carefully studied the reports of explorations and tests of subsurface conditions at or adjacent to the Site and the drawings of physical conditions relating to existing surface or subsurface structures at the Site that have been identified in the Supplementary Conditions, with respect to the Technical Data in such reports and drawings.

5. Bidder has carefully studied the reports and drawings relating to Hazardous Environmental Conditions, if any, at or adjacent to the Site that have been identified in the Supplementary Conditions, with respect to Technical Data in such reports and drawings.

6. Bidder has considered the information known to Bidder itself; information commonly known to contractors doing business in the locality of the Site; information and observations obtained from visits to the Site; the Bidding Documents; and the Technical Data identified in the Supplementary Conditions or by definition, with respect to the effect of such information, observations, and Technical Data on (a) the cost, progress, and performance of the Work; (b) the means, methods, techniques, sequences, and procedures of construction to be employed by Bidder, if selected as Contractor; and (c) Bidder's (Contractor's) safety precautions and programs.

7. Based on the information and observations referred to in the preceding paragraph, Bidder agrees that no further examinations, investigations, explorations, tests, studies,

Copyright© 2018 National Society of Professional Engineers, American Council of Engineering Companies, and American Society of Civil Engineers. All rights reserved.

or data are necessary for the performance of the Work at the Contract Price, within the Contract Times, and in accordance with the other terms and conditions of the Contract.

8. Bidder is aware of the general nature of work to be performed by Owner and others at the Site that relates to the Work as indicated in the Bidding Documents.

9. Bidder has given Engineer written notice of all conflicts, errors, ambiguities, or discrepancies that Bidder has discovered in the Bidding Documents, and of discrepancies between Site conditions and the Contract Documents, and the written resolution thereof by Engineer is acceptable to Contractor.

10. The Bidding Documents are generally sufficient to indicate and convey understanding of all terms and conditions for performance and furnishing of the Work.

11. The submission of this Bid constitutes an incontrovertible representation by Bidder that without exception the Bid and all prices in the Bid are premised upon performing and furnishing the Work required by the Bidding Documents.

8.02 *Bidder's Certifications*

A. The Bidder certifies the following:

1. This Bid is genuine and not made in the interest of or on behalf of any undisclosed individual or entity and is not submitted in conformity with any collusive agreement or rules of any group, association, organization, or corporation.

2. Bidder has not directly or indirectly induced or solicited any other Bidder to submit a false or sham Bid.

3. Bidder has not solicited or induced any individual or entity to refrain from bidding.

4. Bidder has not engaged in corrupt, fraudulent, collusive, or coercive practices in competing for the Contract. For the purposes of this Paragraph 8.02.A:

a. Corrupt practice means the offering, giving, receiving, or soliciting of anything of value likely to influence the action of a public official in the bidding process.

b. Fraudulent practice means an intentional misrepresentation of facts made (a) to influence the bidding process to the detriment of Owner, (b) to establish bid prices at artificial non-competitive levels, or (c) to deprive Owner of the benefits of free and open competition.

c. Collusive practice means a scheme or arrangement between two or more Bidders, with or without the knowledge of Owner, a purpose of which is to establish bid prices at artificial, non-competitive levels.

d. Coercive practice means harming or threatening to harm, directly or indirectly, persons or their property to influence their participation in the bidding process or affect the execution of the Contract.

Copyright© 2018 National Society of Professional Engineers, American Council of Engineering Companies, and American Society of Civil Engineers. All rights reserved.

BIDDER hereby submits this Bid as set forth above:

Bidder:

_____

(typed or printed name of organization)

By: _____

(individual's signature)

Name: _____

(typed or printed)

Title: _____

(typed or printed)

Date: _____

(typed or printed)

If Bidder is a corporation, a partnership, or a joint venture, attach evidence of authority to sign.

Attest: _____

(individual's signature)

Name: _____

(typed or printed)

Title: _____

(typed or printed)

Date: _____

(typed or printed)

Address for giving notices:

_____

_____

Bidder's Contact:

Name: _____

(typed or printed)

Title: _____

(typed or printed)

Phone: _____

Email: _____

Address:

_____

_____

_____

Bidder's Contractor License No.: (if applicable) _____

Copyright© 2018 National Society of Professional Engineers, American Council of Engineering Companies, and American Society of Civil Engineers. All rights reserved.

TOWN OF JEROME

YAVAPAI COUNTY, ARIZONA

WASTEWATER TREATMENT PLANT

100% ISSUED FOR BID

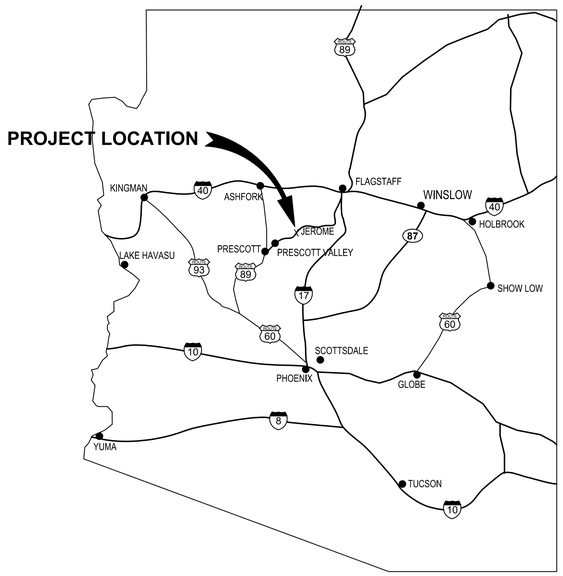

LOCATION MAP

N.T.S.

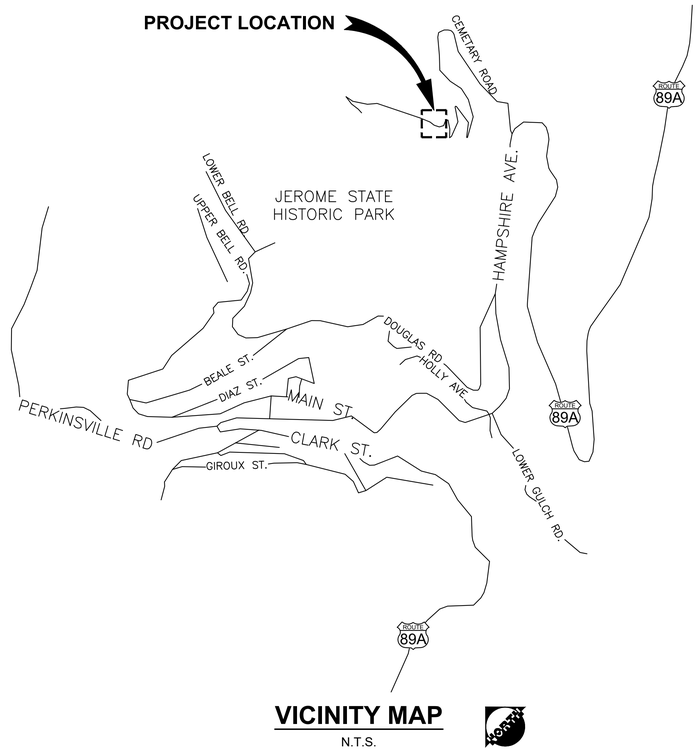

VICINITY MAP

N.T.S.

SURVEY DETAILS:

1. COORDINATES WERE VERIFIED IN THE FIELD USING REAL TIME KINEMATIC GPS OBSERVATIONS RELATIVE TO PUBLISHED CONTROL POINTS.
2. SURVEYED DURING THE MONTH OF DECEMBER 2022.
3. CONTRACTOR SHALL VERIFY HORIZONTAL AND VERTICAL CONTROLS IN THE FIELD PRIOR TO CONSTRUCTION.
4. PROJECT METADATA:
   - UNITS:
     COORDINATES, DISTANCE AND ELEVATIONS ARE SHOWN IN INTERNATIONAL FEET.
   - HORIZONTAL DATUM (BASIS OF BEARINGS):
     NAD83 (2011 Epoch) ARIZONA CENTRAL ZONE
   - VERTICAL DATUM:
     NAVD '88
   - PROJECT BENCHMARK:
     POINT NUMBER 1
     PRIMARY BENCHMARK DESCRIBED AS: SET 1/2" REBAR
     SET REBAR WITH OPUS PROCESSED SOLUTION:
     GRID NORTHING = 1365466.36
     GRID EASTING = 643466.42
     OPUS ELEVATION = 4827.11
5. THE COORDINATES PRESENTED ARE SHOWN TO THREE DECIMAL PLACES FOR CALCULATION PURPOSES AND ARE NOT REPRESENTATIVE OF THE PRECISION OF THE SURVEY MEASUREMENTS.
6. THIS NOT A PROPERTY BOUNDARY SURVEY.

PROJECT ADDRESS:

TOWN OF JEROME WASTEWATER TREATMENT PLANT
SEWER PLANT ROAD
JEROME, AZ 86331

PRINCIPAL OWNER:

TOWN OF JEROME
600 CLARK STREET, P.O. BOX 335
JEROME, AZ 86331

GEODETIC CONTROL:

PT	NORTHING	EASTING	ELEVATION
1	1365466.36	643466.42	4827.11
2	1365826.06	643587.50	4801.17
3	1365527.64	643545.12	4815.50
4	1364201.32	642110.19	4832.28
5	1364259.41	642191.45	4827.73
6	1365024.28	642592.65	4654.33

CONSULTANTS:

ENGINEER OF RECORD

PACIFIC ADVANCED CIVIL ENGINEERING (PACE)
8723 E. VIA de COMMERCIO, #A204
SCOTTSDALE, AZ 85258
BUSINESS LICENSE NO. 1006013
(480) 991-3595
CONTACT: TAYLOR PIERCE, P.E.
CONTACT: MIKE KREBS, P.E.

CIVIL ENGINEER
SEC ENGINEERING
825 COVE PARKWAY
COTTONWOOD, AZ 86326
(928) 282-7787
CONTACT: KRISHAN GINIGE

STRUCTURAL ENGINEER:
PK ASSOCIATES
6900 E. BELLEVIEW AVENUE, SUITE 200
GREENWOOD VILLAGE, CO 80111
(720) 799-1053
CONTACT: JAMES APPLEYARD

ELECTRICAL ENGINEER:
WRIGHT ENGINEERING
165 E. CHILTON DRIVE
CHANDLER, AZ 85225
(480) 497-5829
CONTACT: JACOB BIELEFELDT

FINAL DESIGN APPROVAL:

BY: Brett Kai DATE: 4/21/2026
TOWN MANAGER
THE TOWN APPROVES THESE PLANS FOR CONCEPT ONLY AND IS NOT LIABLE FOR ERRORS OR OMISSIONS

RECORD DRAWING:

THESE RECORD DRAWINGS HAVE BEEN PREPARED BASED ON INFORMATION PROVIDED BY THE CONSTRUCTION CONTRACTOR. THE ENGINEER HAS INSPECTED THE COMPLETED FACILITIES AND CERTIFIES THAT THEY ARE A SUBSTANTIALLY ACCURATE PRESENTATION OF THE LAYOUT AND CONDITION OF THE CONSTRUCTED PROJECT.

NAME _____(SEAL)
REGISTRATION NO. _____ DATE _____
REVD. BY: _____
FIELD ENGINEERING

100% ISSUED FOR BID

PREPARED BY: TAYLOR B. PIERCE R.C.E 70097 DATE

PACE
Advanced Water Engineering
8723 E. VIA de COMMERCIO, SUITE A, SCOTTSDALE, CA 85258
P. (480) 991-3595 | www.pacewater.com

NO	BY	DATE	REVISIONS	DATE	APP.

Registered Professional Engineer (Civil)
CERTIFICATE NO. 70097
Signed
TAYLOR B. PIERCE
ARIZONA, U.S.A.
Expires 12/31/28

PREPARED BY: PACE
DESIGNED BY: NE
DRAWN BY: DS, WW
CHECKED BY: TP
SCALE: AS NOTED
DATE: NOV 2025
JOB NO. B614

TITLE: TITLE SHEET

JOB: TOWN OF JEROME WASTEWATER TREATMENT PLANT — YAVAPAI CO. AZ

SHEET
G1.0
1 OF 99 SHEETS

JOB NO. B614

THESE DRAWINGS ARE THE PROPERTY OF P.A.C.E. AND SHALL NOT BE REPRODUCED IN ANY MANNER NOR BE USED FOR CONSTRUCTION UNLESS STAMPED 'ISSUED FOR CONSTRUCTION'.

W:\B614\Engineering\B614-30\sheets\B614 - G1.0 TITLE SHEET.dwg - Tab: G1.0 - by nsddrgton on 04/21/26 at 12:17:57 PM

SHEET INDEX

DWG No.	SHT No.	TITLE
GENERAL		
1	G1.0	TITLE SHEET
2	G1.1	SHEET INDEX
3	G2.0	GENERAL NOTES AND ABBREVIATIONS
4	G3.0	HYDRAULIC PROFILE
5	G3.1	HYDRAULIC PROFILE
6	G3.2	PROCESS FLOW DIAGRAM
CIVIL		
7	C-1.0	NOTES
8	C-1.1	NOTES 2, LEGENDS, ABBREVIATIONS
9	C-1.2	TYPICAL SECTIONS
10	C-2.0	GRADING SITE MAP, SURVEY CONTROL
11	C-2.1	WWTP SITE GRADING-10SC
12	C-2.2	NORTH DR IMPROVEMENTS
13	C-2.3	WWTP ACCESS RD P&P 25+00+TO 30+00
14	C-2.4	WWTP ACCESS RD P&P 30+00 TO 35+00
15	C-2.5	WWTP ACCESS RD P&P 35+00 TO 37+50
16	C-2.6	WWTP ACCESS RD P&P 37+50 TO 39+75
17	C-2.7	NEW SEWER ACCESS ROAD
18	C-3.0	NEW SEWER SITE MAP, SURVEY CONTROL
19	C-3.1	NEW SEWER P&P
20	C-4.0	ALT SEWER SITE MAP, SURVEY CONTROL
21	C-4.1	ALT SEWER P&P 10+00 TO 15+25
22	C-4.2	ALT SEWER P&P 15+25 TO 20+50
23	C-4.3	ALT SEWER P&P 15+25 TO 20+50
24	C-4.4	ALT SEWER WEST TURNAROUND
25	C-4.5	ALT SEWER LATERAL PROFILES
MECHCANICAL		
26	M1.0	EXISTING SITE PLAN
27	M1.1	DEMOLITION PLAN PH-I
28	M1.2	DEMOLITION PLAN PH-II
29	M2.0	PROPOSED SITE PLAN
30	M2.1	YARD PIPING & GRADING PLAN
31	M2.2	YARD PIPING
32	M2.3	YARD PIPING
33	M2.4	YARD PIPING
34	M2.5	PLAN & PROFILE
35	M3.0	SBR MECHANICAL PLAN
36	M3.1	SBR MECHANICAL PLAN
37	M3.2	SBR MECHANICAL SECTIONS
38	M4.0	DEWATERING & CCC MECH PLAN
39	M4.1	CHLORINE CONTACT BASIN SECTION
40	M4.2	DEWATERING SECTION
41	M5.0	SLUDGE DRYING BEDS PLAN
42	M5.1	SLUDGE DRYING BEDS SECTIONS
43	M5.2	DRYING BED LIFT STATION SECTIONS
44	M6.0	EMERGENCY OVERFLOW BASIN PLAN AND SECTIONS
45	M7.0	BLOWER OPS PLAN
46	M8.0	MECHANICAL DETAILS I
47	M8.1	MECHANICAL DETAILS II
48	M8.2	MECHANICAL DETAILS III
49	M8.3	MECHANICAL DETAILS IV
50	M8.4	MECHANICAL DETAILS V
51	M8.5	MECHANICAL DETAILS VI
STRUCTURAL		
52	S1.1	GENERAL STRUCTURAL NOTES
53	S1.2	GENERAL STRUCTURAL NOTES
54	S1.3	TYPICAL DETAILS
55	S1.4	TYPICAL DETAILS
56	S1.5	TYPICAL DETAILS
57	S1.6	TYPICAL DETAILS
58	S1.7	TYPICAL DETAILS
59	S2.0	FOUNDATION PLAN
60	S2.01	FRAMING PLAN
61	S2.10	FRAMING PLAN
62	S3.1	FOUNDATION DETAILS
63	S3.2	FOUNDATION DETAILS
64	S3.3	FOUNDATION DETAILS
65	S4.1	FRAMING DETAILS
66	S4.2	FRAMING DETAILS

ARCHITECTURAL		
67	A1.0	BLOWER OPS ARCH PLAN
68	A2.0	BLOWER OPS ARCH REFLECTED CEILING PLAN
69	A3.0	BLOWER OPS ARCH SEWER & PLUMBING PLAN
70	A4.0	BLOWER OPS ARCH ELEVATIONS & SECTIONS
ELECTRICAL		
71	E1.1	ELECTRICAL COVER SHEET
72	E1.2	ELECTRICAL LEGEND
73	E2.1	SINGLE LINE DIAGRAM I
74	E2.2	SINGLE LINE DIAGRAM II
75	E2.3	LOAD CALCULATIONS
76	E2.4	WIRE & COND TABLES I
77	E2.5	WIRE & COND TABLES II
78	E3.1	ELECTRICAL PROPOSED SITE PLAN
79	E3.2	ELECTRICAL SBR PLAN
80	E3.3	ELECTRICAL DEWATERING PAD
81	E3.4	ELECTRICAL BLOWER OPS
82	E3.5	ELECTRICAL DRYING BED LIFT STATION
83	E3.6	ELECTRICAL OVERFLOW BASIN
84	E4.1	ELECTRICAL DETAILS I
85	E4.2	ELECTRICAL DETAILS II
86	E4.3	ELECTRICAL DETAILS III
87	E4.4	ELECTRICAL DETAILS IV
88	E4.5	ELECTRICAL DETAILS V
89	E4.6	ELECTRICAL DETAILS VI
90	E5.1	ELECTRICAL SCHEMATICS I
91	E5.2	ELECTRICAL SCHEMATICS II
92	E5.3	ELECTRICAL SCHEMATICS III
P&ID		
93	I0.0	P&ID GENERAL NOTES
94	I1.0	HEADWORKS
95	I1.1	SEQUENCING BATCH REACTOR
96	I1.2	CHLORINE CONTACT & DIGESTER
97	I1.3	BLOWER ROOM
98	I1.4	DEWATERING & LIFT STATIONS
99	I1.5	GENERATOR

LEGEND

- ASPHALT
- DECOMPOSED GRAVEL FILL
- CONCRETE
- SAND
- BACKFILL
- ENGINEERED BACKFILL
- DEMO
- EXISTING 1' CONTOUR
- CONSTRUCTION NOTES INCL. FITTINGS, VALVES & MISC. EQUIPMENT (SEE THE SAME SHT.)
- THRUST BLOCK
- EQUIPMENT

ABBREVIATIONS

AB	AGGREGATE BASE
AC	ASPHALT CONCRETE
A/C	AIR CONDITIONER
ADF	AVERAGE DAY FLOW
APPROX	APPROXIMATELY
ARCH	ARCHITECTURAL
ARV	AIR RELEASE VALVE
AUTO	AUTOMATIC
AUX	AUXILIARY
AVV	AIR VACUUM VALVE
AWS	ALARM WATER SURFACE
BO	BLOWOFF
BC	BEGINNING OF CURVE
BF	BLIND FLANGE
BLDG	BUILDING
BM	BEAM, BENCHMARK
BOD	BIOCHEMICAL OXYGEN DEMAND
BOS	BOTTOM OF SURFACE
BOT	BOTTOM
BVC	BEGIN VERTICAL CURVE
CATV	CABLE TELEVISION
CFH	CUBIC FOOT PER HOUR
CFM	CUBIC FOOT PER MINUTE
CFS	CUBIC FOOT PER SECOND
CH	CHUCK
CMU	CONCRETE MASONRY UNIT
CO	CLEANOUT
COTG	CLEANOUT TO GRADE
CONST	CONSTRUCTION
CPLG	COUPLING
CPVC	CHLORINATED POLYVINYL CHLORIDE
CTR	CENTER
CV	CHECK VALVE
CW	COLD WATER
CYL	CYLINDER
D	DRAIN
DAF	DISSOLVED AIR FLOATATION
DI	DROP INLET
DIA	DIAMETER
DIP	DUCTILE IRON PIPE
DO	DISSOLVED OXYGEN
DTL	DETAILS
DWG	DRAWING
E	ELECTRICAL
EA	EACH
EC	END OF CURVE
ECC	ECCENTRIC
EF	EACH FACE
EFF	EFFLUENT
EL	ELEVATION
EP	EDGE OF PAVEMENT
EQUIP	EQUIPMENT
EW	EACH WAY
EXH	EXHAUST
EX	EXISTING
FC	FLEXIBLE COUPLING
FD	FLOOR DRAIN
FF	FINISHED FLOOR
FG	FINISHED GROUND
FH	FIRE HYDRANT
FL	FLOW LINE
FLEX	FLEXIBLE
FLG	FLANGE
FM	FORCE MAIN
FPS	FEET PER SECOND
FS	FINISHED SLAB
FT	FEET
FUT	FUTURE
G	GAS
GA	GAUGE
GAL	GALLONS
GALV	GALVANIZED
GB	GRADE BREAK
GPD	GALLONS PER DAY
GPM	GALLONS PER MINUTE
H/A	HAND AUTOMATIC
HDPE	HIGH DENSITY POLYETHYLENE
HOA	HAND-OFF-AUTOMATIC
HORIZ	HORIZONTAL
HP	HIGH POINT
HWL	HIGH WATER LEVEL
HWS	HIGH WATER SURFACE
HZ	HERTZ
ID	INSIDE DIAMETER
I&C	INSTRUMENTATION & CONTROLS INTEGRATOR
IN	INCHES
INF	INFLUENT
IRR	IRRIGATION
INV	INVERT
JB	JUNCTION BOX
LBS	POUNDS
LBS/D	POUNDS PER DAY
LF	LINEAR FEET
LP	LOW PRESSURE
LWL	LOW WATER LEVEL
LWS	LOW WATER SURFACE
MAX	MAXIMUM
MCC	MOTOR CONTROL CENTER
MECH	MECHANICAL
MFR	MANUFACTURER
MGD	MILLION GALLONS PER DAY
MG/L	MILLIGRAMS PER LITER
MH	MANHOLE OR MAINTENANCE HOLE
MIN	MINIMUM, MINUTE
MISC	MISCELLANEOUS
MJ	MECHANICAL JOINT
MLSS	MIXED LIQUOR SUSPENDED SOLIDS
MMADF	MAX MONTH AVERAGE DAY FLOW
N	NORTHING
N/C	NORMALLY CLOSED
N/O	NORMALLY OPEN
NTS	NOT TO SCALE
NWL	NORMAL WATER LEVEL
NPSH	NET POSITIVE SUCTION HEAD
OC	ON CENTER
OD	OUTSIDE DIAMETER
PG	PRESSURE GAUGE
PI	POINT OF INTERSECTION
PO	PUSH ON
PP	POWER POLE, PIPE PENETRATION
PRFV	PRESSURE RELIEF VALVE
PRC	POINT OF REVERSE CURVE
PRV	PRESSURE REGULATING (REDUCING) VALVE
PS	PRESSURE SWITCH, PIPE SUPPORT
PSI	POUNDS PER SQUARE INCH
PV	PLUG VALVE
PVC	POLYVINYL CHLORIDE
PVMT	PAVEMENT
PW	POTABLE WATER
R	RADIUS
RAS	RETURN ACTIVATED SLUDGE
RED	REDUCER
REQ'D	REQUIRED
RPM	REVOLUTIONS PER MINUTE
RQMT	REQUIREMENT
R&R	REMOVE AND RELOCATE (REINSTALL)
R&S	REMOVE AND SAVE (SALVAGE)
R/W	RIGHT OF WAY
R&W	REMOVE AND WASTE
RW	RECLAIMED WATER
S	SLOPE
SS	SANITARY SEWER
SSMH	SANITARY SEWER MANHOLE
SBR	SEQUENCING BATCH REACTOR
SD	STORM DRAIN
SE	SECONDARY EFFLUENT
SEC	SECTION
SHT	SHEET
SOV	SHUT OFF VALVE
SPEC	SPECIFICATION
SQ	SQUARE
SS	STAINLESS STEEL
ST	STREET
STA	STATION
T&B	TOP AND BOTTOM
TB	THRUST BLOCK
TBA	TO BE ABANDONED
TDH	TOTAL DYNAMIC HEAD
TEL	TELEPHONE
TEMP	TEMPERATURE
TOS	TOP OF SLAB
TOW	TOP OF WALL
TYP	TYPICAL
UNO	UNLESS NOTED OTHERWISE
VAC	VOLTS ALTERNATING CURRENT
VDC	VOLTS DIRECT CURRENT
VERT	VERTICAL
VCP	VITRIFIED CLAY PIPE
W	WATER
WAS	WASTE ACTIVATED SLUDGE
W/O	WITHOUT
WS	WATER SURFACE

100% ISSUED FOR BID

NO	BY	DATE	REVISIONS	DATE	APP.

Registered Professional Engineer (Civil) CERTIFICATE NO. 70097 Timothy B. Pierce Signed ARIZONA, U.S.A. Expires 12/31/28

THESE DRAWINGS ARE THE PROPERTY OF P.A.C.E. AND SHALL NOT BE REPRODUCED IN ANY MANNER NOR BE USED FOR CONSTRUCTION UNLESS STAMPED 'ISSUED FOR CONSTRUCTION'.

PREPARED BY: PACE
DESIGNED BY: NE
DRAWN BY: DS, WW
CHECKED BY: TP
SCALE: AS NOTED
DATE: NOV 2025
JOB NO.: B614

TITLE: SHEET INDEX

JOB: TOWN OF JEROME WASTEWATER TREATMENT PLANT — YAVAPAI CO. AZ

PREPARED BY: TAYLOR B. PIERCE R.C.E 70097 DATE
PACE Advanced Water Engineering
8723 E. Via de Ventura Suite A-144 Scottsdale, CA 85258
P: (480) 991-3395 | www.pacewater.com

SHEET G1.1
2 OF 99 SHEETS

JOB NO. B614

W:\B614\Engineering\B614-30\sheets\B614 - G1.0 TITLE SHEET.dwg - Tab: G1.1 - by reddington on 04/21/26 at 12:17:57 PM

GENERAL NOTES:

1. ALL PAVING, GRADING, PIPING, AND UTILITY LINE CONSTRUCTION WORK WITHIN THE PUBLIC RIGHT OF WAY, ON PRIVATE STREETS, ACCESS WAYS, LOT GRADING, MATERIALS, AND WORKMANSHIP SHALL COMPLY WITH TOWN OF JEROME ENGINEERING STANDARDS AND SPECIFICATIONS, AND SHALL CONFORM TO THE LATEST MARICOPA ASSOCIATION OF GOVERNMENTS (MAG) AND A.D.O.T. STANDARD DETAILS AND SPECIFICATIONS. GRADING WORK SHALL CONFORM TO MAG SPECIFICATIONS, THE SOILS REPORT, AND CHAPTER 70 ENTITLED "EXCAVATION AND GRADING" OF THE UNIFORM BUILDING CODE (UBC) LATEST EDITION, SUBSECTIONS 7001 TO 7005, 7009 TO 7013, FIGURES 70-1 AND 70-2 AND AS STATED THEREIN. LOCAL MUNICIPAL STANDARD DETAILS WILL CONTINUE TO APPLY WHERE NOT ADOPTED OR INCLUDED BY MAG. THE FOLLOWING NOTES AND SPECIFICATIONS ARE HEREBY MADE A PART OF THE CONTRACT DOCUMENTS AND PROJECT SPECIFICATIONS. WHERE THERE EXISTS A CONFLICT BETWEEN THESE NOTES, MAG SPECS, UBC, THE SOILS REPORT, OR THE PROJECT SPECIFICATIONS, THE MORE STRINGENT OF THE REQUIREMENTS SHALL GOVERN UNLESS PRIOR CLARIFICATION FROM THE ENGINEER HAS BEEN GIVEN IN WRITING TO THE CONTRACTOR. THE CONTRACTOR AS STATED HEREIN SHALL MEAN THE GENERAL CONTRACTOR AND HIS ASSOCIATED SUBCONTRACTORS. THE GENERAL CONTRACTOR IS RESPONSIBLE FOR THE COORDINATION AND PERFORMANCE OF THE WORK OF ALL HIS SUBCONTRACTORS AND SUPPLIERS.
2. ALL WORK SHALL BE BID AND INSTALLED BY THE CONTRACTOR COMPLETE AND OPERATIONAL TO LINES, GRADES, AND FUNCTIONS INDICATED ON ALL PLANS AND SPECIFICATIONS. THE CONTRACTOR SHALL PROVIDE ALL LABOR, MATERIALS, EQUIPMENT, AND SERVICES NECESSARY TO COMPLETE ALL PROJECT EARTHWORK AND SITE WORK INCLUDING BUT NOT LIMITED TO: SITE CLEARING, GRUBBING, DEMOLITION, DEBRIS REMOVALS FROM THE SITE, IMPORT AND/OR EXPORT OF SOILS AND OTHER MATERIALS TO AND FROM THE SITE, BORROW MATERIALS, TEMPORARY SOILS MATERIAL STOCKPILING, BACKFILL OF ONSITE BORROW PITS, MOVING OF MATERIALS, CUT AND FILL, SLOPES, SOILS AND BANK STABILIZATION AND PROTECTION, BERMING, ROADWAY EXCAVATIONS, RELOCATIONS, STRUCTURE EXCAVATIONS, TRENCHING, ALL BACKFILLING, SITE GRADING, PAVING, PIPING, UTILITY LINE AND STORM DRAINAGE CONSTRUCTION, CURBS, SITE CONCRETE WORK AND OTHER MISCELLANEOUS SITE WORK STRUCTURES AND ITEMS INDICATED ON THE PLANS AND IN THE CONTRACT DOCUMENTS.
3. ANY QUANTITIES SHOWN ON PLANS ARE NOT VERIFIED BY THE ENGINEER. QUANTITIES ARE APPROXIMATE ONLY AND INTENDED AS A GUIDE FOR ESTIMATING PURPOSES. THE CONTRACTOR IS RESPONSIBLE FOR PROVIDING HIS OWN QUANTITY TAKE OFFS. THE CONTRACTOR SHALL VISIT THE SITE AND REVIEW THE SOILS CONDITIONS AND THE SOILS REPORT WITH THE PROJECT SOILS ENGINEER PRIOR TO BIDDING THIS PROJECT. ANY DISCREPANCIES IN SITE MATERIALS SHALL BE BROUGHT TO THE ATTENTION OF THE DESIGN ENGINEER 7 DAYS MINIMUM PRIOR TO BIDDING FOR REVIEW. ALL SHRINK OF EARTH MATERIAL OR EXCESS MATERIAL FROM UTILITY TRENCHES AND FOUNDATIONS SHALL BE INCLUDED IN THE CONTRACTOR'S BID.
4. THE ENGINEER WILL NOT BE RESPONSIBLE FOR CONSTRUCTION MEANS, METHODS, TECHNIQUES, SEQUENCES, OR PROCEDURES OR FOR SAFETY PRECAUTIONS OR PROGRAMS UTILIZED IN CONNECTION WITH THE WORK, AND HE WILL NOT BE RESPONSIBLE FOR THE CONTRACTOR'S FAILURE TO CARRY OUT THE WORK IN ACCORDANCE WITH THE CONTRACT DOCUMENTS.
5. THE CONTRACTOR SHALL BE RESPONSIBLE FOR VERIFYING THE LIMITS OF THE WORK AREA FOR ALL PHASES OF THE WORK PRIOR TO BEGINNING CONSTRUCTION OF THOSE PHASES. ALL CONSTRUCTION LIMITS, AREAS OF WORK, SETBACKS, PERIMETERS, ADJACENT PROPERTY LINES, BOUNDARIES, AND OTHER CRITERIA DEFINING THE LIMITS OF THE CONTRACTOR'S WORK AREA AND LIMITS SHALL BE STAKED BY THE CONTRACTOR'S SURVEYOR PRIOR TO CONSTRUCTION OF CLEARING OF THE SITE. THE CONTRACTOR SHALL BE RESPONSIBLE FOR FAMILIARIZING HIMSELF WITH THE EXTENT OF WORK TO BE DONE IN EACH SEPARATE PHASE OF THE PROJECT, AND ANY WORK NECESSARY IN INACTIVE PHASES REQUIRED TO DEEM THE ACTIVE PHASES FINISHED, SAFE, AND SERVICEABLE.
6. THE DESIGN ENGINEER RESERVES THE RIGHT TO MAKE MINOR FIELD MODIFICATIONS TO GRADES AND STRUCTURE DESIGNS TO ACCOMMODATE FIELD CONDITIONS FOUND ON THE SITE. THIS INCLUDES BUT IS NOT LIMITED TO MINOR MODIFICATIONS TO GRADE, ALIGNMENT, SLOPE, OR STRUCTURE LOCATIONS. THE ENGINEER SHALL HAVE THE RIGHT TO MAKE SUCH CHANGES IN WRITING IN THE LOCATION AND QUANTITIES OF WORK AS MAY BE DEEMED ADVISABLE.
7. NO JOB WILL BE CONSIDERED COMPLETE UNTIL FINAL GRADING IS COMPLETE AND ALL CURBS, PAVEMENT, AND SIDEWALKS HAVE BEEN SWEPT CLEAN OF ALL DIRT AND DEBRIS, ALL SURVEY MONUMENTS ARE INSTALLED AND ALL VALVES, MANHOLES, AND BOXES HAVE BEN ADJUSTED ACCORDING TO THE PLANS AND STANDARD DETAILS.
8. SEE SPECIFICATION SECTION 01 11 00 SUMMARY OF WORK FOR DIVISION OF RESPONSIBILITY. SEE SPECIFICATION SECTION 00 70 00 CONDITIONS OF THE CONTRACT FOR DEFINITIONS.
9. ALL CONSTRUCTION SHALL BE IN ACCORDANCE WITH UNITED STATES ENVIRONMENTAL PROTECTION AGENCY STANDARDS AND POLICIES AND CURRENT SUPPLEMENTS THERETO.
10. ANY WORK PERFORMED WITHOUT THE APPROVAL OF THE ENGINEER AND/OR ALL WORK AND MATERIAL NOT IN CONFORMANCE WITH THE SPECIFICATIONS IS SUBJECT TO REMOVAL AND REPLACEMENT AT THE CONTRACTOR'S EXPENSE.
11. DEBRIS SHALL BE DISPOSED OF WITHIN APPROVED DISPOSAL FACILITIES.
12. THE CONTRACTOR SHALL PROVIDE ADEQUATE MEANS FOR CLEANING TRUCKS AND/OR OTHER EQUIPMENT OF MUD PRIOR TO ENTERING PUBLIC STREETS. IT IS THE CONTRACTOR'S RESPONSIBILITY TO CLEAN STREETS, ALLEY DUST, AND TAKE WHATEVER MEASURES ARE NECESSARY TO ENSURE THAT ALL ADJACENT ROADS ARE MAINTAINED IN A CLEAN, MUD AND DUST FREE CONDITION AT ALL TIMES.
13. CONTRACTOR SHALL TAKE MEASURES TO CONTROL DUST AND FUGITIVE EMISSIONS, INCLUDING BUT NOT LIMITED TO WATERING THE SITE TWICE DAILY DURING GRADING TO CONTROL DUST.
14. AN APPROVED SET OF PLANS SHALL BE ON THE JOB SITE AT ALL TIMES WORK IS IN PROGRESS. DEVIATION FROM THE PLANS WILL NOT BE ALLOWED WITHOUT AN APPROVED PLAN REVISION OR AUTHORIZATION FROM THE ENGINEER.
15. THESE DRAWINGS INDICATE THE GENERAL EXTENT OF THE REQUIRED WORK AND ARE NOT INTENDED TO INDICATE EVERY ELEMENT REQUIRED. THE CONTRACTOR SHALL FURNISH ALL ELEMENTS TO COMPLETE THE SCOPE OF WORK IN ACCORDANCE WITH THE CONTRACT DOCUMENTS. ALL ITEMS REQUIRING CLARIFICATIONS SHALL BE SUBMITTED AS A "REQUEST FOR INFORMATION" (RFI) TO THE ENGINEER PER SECTION 01 31 00 OF THE SPECIFICATIONS.
16. ALL CONSTRUCTION VEHICLES OR EQUIPMENT, MOBILE OR FIXED OPERATED, SHALL BE EQUIPPED WITH PROPERLY OPERATING AND MAINTAINED MUFFLERS IN ACCORDANCE WITH THE LOCAL NOISE ORDINANCES.
17. THE CONTRACTOR SHALL PROVIDE SHOP DRAWINGS FOR THE ENGINEER'S REVIEW, AS MAY BE NECESSARY FOR THE EXECUTION OF THE WORK AND AS REQUIRED BY THE DRAWINGS AND SPECIFICATIONS.
18. DUE TO THE ONGOING OPERATION OF THE FACILITY, CONTRACTOR SHALL PROVIDE A SEQUENCE OF CONSTRUCTION FOR TOWN AND ENGINEER'S APPROVAL. TWO WEEKS PRIOR TO THE START OF CONSTRUCTION THE SEQUENCE SHALL INCLUDE A DETAILED SCHEDULE OF EVENTS AND TIMEFRAME. ALL EQUIPMENT, PIPING, LABOR, ETC. FOR THE SEQUENCE SHALL BE THE RESPONSIBILITY OF THE CONTRACTOR. ALL TEMPORARY SHUTDOWNS AND CHANGES IN FACILITY OPERATION SHALL BE DISCLOSED TO OWNER AT LEAST 7 DAYS PRIOR.
19. PAVEMENT REPAIR, AS REQUIRED, MAY BE WITH COLD-MIX ASPHALT CONCRETE, WITH A MINIMUM THICKNESS OF 2 INCHES, USING AGGREGATE GRADING IN ACCORDANCE WITH MARSHALL MIX DESIGN OF SECTION 710 OF MAG UNIFORM STANDARD SPECIFICATIONS AND DETAILS FOR PUBLIC WORK CONSTRUCTION.
20. ALL CONSTRUCTION WORK SHALL BE PERFORMED IN ACCORDANCE WITH THE SOILS AND/OR GEOTECHNICAL REPORT PREPARED BY WESTERN TECHNOLOGIES, INC. DATED 10/25/2022. THIS REPORT IS SUPPLEMENTED BY 1) THESE PLANS AND SPECIFICATIONS, 2) YAVAPAI COUNTY PUBLIC WORKS STANDARDS AND SPECIFICATIONS, 3) STATE OF ARIZONA STANDARD DETAILS. IN THE EVENT OF CONFLICT, THE FORMER SHALL TAKE PRECEDENCE OVER THE LATTER. THE PERFORMANCE AND COMPLETION OF ALL WORK MUST BE TO THE SATISFACTION OF THE ENGINEER OF RECORD.

GENERAL CONSTRUCTION NOTES

ENGINEER'S NOTES

1. THE ENGINEER AND APPLICABLE AGENCY MUST APPROVE, PRIOR TO CONSTRUCTION, ANY ALTERATION TO OR VARIANCE FROM THESE PLANS. ANY VARIATION FROM THESE PLANS SHALL BE PROPOSED ON CONSTRUCTION FIELD PRINTS AND TRANSMITTED TO THE ENGINEER.
2. THE CONTRACTOR SHALL PROTECT AND MAINTAIN ALL EXISTING UTILITIES ON THE SITE. ANY DAMAGE TO EXISTING UTILITIES, WHETHER SHOWN OR NOT ON THE DRAWING SHALL BE REPAIRED/REPLACED AT THE CONTRACTOR'S EXPENSE. EXISTING SURFACE FEATURES AND FENCING SHALL BE REPLACED IN KIND.
3. ANY INSPECTION BY THE TOWN, COUNTY OR THE ENGINEER, SHALL NOT IN ANY WAY RELIEVE THE CONTRACTOR FROM ANY OBLIGATION TO PERFORM THE WORK IN STRICT COMPLIANCE WITH THE APPLICABLE CODES AND AGENCY REQUIREMENTS.
4. CONTRACTOR IS TO LOCATE ALL EXISTING PROPERTY MONUMENTS PRIOR TO CONSTRUCTION. NO EXISTING SURVEY MONUMENTATION SHALL BE REMOVED OR DISTURBED BY THE CONTRACTOR WITHOUT NOTIFICATION AND APPROVAL OF THE PROJECT SURVEYOR. THE CONTRACTOR SHALL CONTACT THE PROJECT SURVEYOR FOR THE SETTING OF REFERENCE POINTS 48 HOURS PRIOR TO DISTURBING OR REMOVING ANY MONUMENTS. A REGISTERED LAND SURVEYOR AT THE CONTRACTOR'S EXPENSE SHALL REPLACE ANY MONUMENTS DISTURBED DURING THE CONSTRUCTION OF THIS PROJECT.
5. NOTHING CONTAINED IN THE CONTRACT DOCUMENTS SHALL CREATE, NOR SHALL BE CONSTRUED TO CREATE, ANY CONTRACTUAL RELATIONSHIP BETWEEN THE ENGINEER AND THE CONTRACTOR OR ANY SUBCONTRACTOR.
6. ANY CONSTRUCTION WATER OBTAINED FROM THE TOWN WATER SOURCE WILL REQUIRE METER AND A BULK WATER PERMIT TO TRACK USAGE. THE TOWN WILL WAIVE FEES FOR PERMITTING AND USAGE IF USAGE IS LESS THEN 20,000 GALLONS. CONTACT THE TOWN OF JEROME AT (928) 634-7943 TO REQUEST A METER.
7. THE CONTRACTOR SHALL MAKE NO CLAIM AGAINST THE OWNER OR THE ENGINEER REGARDING ALLEGED INACCURACY OF CONSTRUCTION STAKES SET BY THE ENGINEER UNLESS ALL SURVEY STAKES SET BY THE ENGINEER ARE MAINTAINED INTACT AND CAN BE VERIFIED AS TO THEIR ORIGIN. IF, IN THE OPINION OF THE ENGINEER, THE STAKES ARE NOT MAINTAINED INTACT AND CANNOT BE VERIFIED AS TO THEIR ORIGIN, ANY REMEDIAL WORK REQUIRED TO CORRECT ANY ITEM OR IMPROPER CONSTRUCTION WORK IN THIS DEVELOPMENT SHALL BE PERFORMED AT THE SOLE EXPENSE OF THE RESPONSIBLE CONTRACTOR OR SUBCONTRACTOR.
8. TRAFFIC CONTROL SHALL BE MAINTAINED IN ACCORDANCE WITH THE TOWN OF JEROME MUNICIPAL CODES.
9. A PORTION OF THIS PROJECT SITE IS LOCATED WITHIN A DOCUMENTED 100-YR FEMA FLOODLAIN AS DESIGNATED ON THE PLANS.
10. IN CASES WHEN UNSTAKED EXISTING UTILITIES ARE ENCOUNTERED, SOME MINOR DEVIATION TO THE PROPOSED SEWER ALIGNMENT MAY BE ALLOWED TO MAINTAIN MINIMUM SEPARATION DISTANCES BETWEEN UTILITIES. ANY PROPOSED CHANGES TO THE ALIGNMENT MUST BE SUBMITTED TO THE TOWN'S REPRESENTATIVE FOR REVIEW. NO CHANGES WILL BE ALLOWED WITHOUT PROPER APPROVAL.
11. PRIOR TO BIDDING THE WORK, THE CONTRACTOR SHALL THOROUGHLY SATISFY HIMSELF AS TO THE ACTUAL CONDITIONS AND EARTHWORK QUANTITIES, IF ANY. NO CLAIM SHALL BE MADE AGAINST THE OWNER OR ENGINEER FOR ANY EXCESS OR DEFICIENCY THEREIN, ACTUAL OR RELATIVE.
12. THE ENGINEERS SHALL BE NOTIFIED BEFORE ANY ONSITE CONSTRUCTION BEGINS.
13. A SEPARATE PERMIT IS NECESSARY FOR ANY OFFSITE CONSTRUCTION.
14. APPROVAL OF THESE PLANS SHALL NOT PREVENT THE TOWN FROM REQUIRING CORRECTION OF ERRORS IN THE PLANS WHERE SUCH ERRORS ARE SUBSEQUENTLY FOUND TO BE IN VIOLATION OF ANY LAW OR ORDINANCE.

MECHANICAL CONSTRUCTION NOTES:

1. CONTRACTOR TO INSTALL PIPE SUPPORTS PER MANUFACTURER'S REQUIREMENTS AND SPECIFICATIONS. ALL DRY AREA PIPE SUPPORTS SHALL BE GALVANIZED STEEL U.N.O. ALL SUBMERGED PIPE SUPPORTS SHALL BE S.S. 316.
2. CONTRACTOR TO INSTALL PUMP BASE, GUIDE RAILS, AND BRACKETS PER MANUFACTURER'S REQUIREMENTS. CONTRACTOR SHALL CONFIRM SUPPLY OF PUMP MOUNTING EQUIPMENT WITH PUMP SUPPLIER.
3. ALL PROCESS PIPES SHALL BE COLOR COATED PER THE SPECIFICATIONS WITH THE EXCEPTION OF STAINLESS STEEL PIPES. ALL ABOVE GROUND PIPES SHALL ALSO BE OUTFITTED WITH A FLOW DIRECTION ARROW.
4. ALL ANCHORING/FASTENING SYSTEMS SHALL BE 316 S.S. REGARDLESS OF LOCATION, U.N.O.
5. CONTRACTOR SHALL SUBMIT SHOP DRAWINGS FOR REVIEW AND APPROVAL FOR EACH EQUIPMENT ITEM PRIOR TO INSTALLATION. INSTALLATION DETAILS FOR ALL EQUIPMENT ITEMS SHALL BE PER RESPECTIVE EQUIPMENT MANUFACTURER'S SHOP DRAWINGS AND RECOMMENDED INSTALLATION REQUIREMENTS.
6. ALL D.I.P. SHALL BE CLASS 350, UNLESS NOTED OTHERWISE.
7. ELEVATION OF EXISTING STRUCTURES, PIPING, AND COMPONENTS ARE APPROXIMATE. CONTRACTOR TO FIELD VERIFY PRIOR TO CONSTRUCTION.
8. PRECAST SUPPLIER TO PROVIDE STRUCTURAL CALCULATIONS STAMPED BY REGISTERED ENGINEER IN AZ TO DOCUMENT DESIGN OF PRECAST STRUCTURE.
9. GROOVE FITTINGS MAY BE USED IN LIEU OF FLANGE FITTINGS FOR ALL ABOVE GROUND D.I. PIPING.
10. CONTRACTOR SHALL BE RESPONSIBLE FOR ALL TEMPORARY PIPING AND EQUIPMENT NEEDED FOR PROCESS ISOLATION, BYPASS, AND TRANSITION.
11. ALL YARD PIPING SHALL BE SURVEYED FOR VERTICAL AND HORIZONTAL ALIGNMENT PRIOR TO BACKFILL.
12. ALL PIPE SUPPORTS SPACING SHALL MEET PIPING MANUFACTURER'S REQUIREMENTS.
13. STRUCTURAL DIMENSIONS CONTROLLED BY OR RELATED TO MECHANICAL OR ELECTRICAL EQUIPMENT SHALL BE VERIFIED BY THE CONTRACTOR AND REFLECTED ON SHOP DRAWING PRIOR TO CONSTRUCTION.
14. ALL PVC PIPE GREATER THAN 3" IN DIAMETER SHALL BE DIPS.
15. ALL EXPOSED PIPE SHALL INCLUDE HEAT TRACING AND INSULATION.
16. ALL NEW BURIED GRAVITY SEWER LINES AND FORCE MAINS SHALL BE INSTALLED WITH A MINIMUM 3' DEPTH OF EARTH COVER.

PERMITS

1. CONTRACTOR SHALL OBTAIN ALL PERMITS AT HIS OWN EXPENSE FROM LOCAL MUNICIPAL AND AIR POLLUTION CONTROL AUTHORITIES PRIOR TO BEGINNING CONSTRUCTION.
2. IT SHALL BE THE RESPONSIBILITY OF THE CONTRACTOR TO ARRANGE FOR THE RELOCATION AND RELOCATION COSTS, IF ANY, OF ALL UTILITIES, AND SUBMIT A UTILITY RELOCATION SCHEDULE TO THE MUNICIPALITY AND DESIGN ENGINEER PRIOR TO CONSTRUCTION. ALL PUBLIC UTILITY EQUIPMENT POLES, BOXES, STRUCTURES, AND MUNICIPAL UTILITY COMPANY EQUIPMENT SHALL BE RELOCATED BY THE APPROPRIATE UTILITY COMPANY OR MUNICIPALITY BEFORE ANY WORK IS STARTED.

RECORD DRAWINGS

1. ACCEPTANCE OF THE COMPLETED PAVING, GRADING, OR UTILITY INSTALLATION WILL NOT BE GIVEN UNTIL REPRODUCIBLE AS-BUILT PLANS HAVE BEEN SUBMITTED BY THE ENGINEER AND APPROVED BY THE LOCAL GOVERNING AGENCY.

OBSERVATION

1. THE CONTRACTOR SHALL CONTACT THE APPROPRIATE PUBLIC UTILITY COMPANIES FOR INSPECTION OF TRENCHING, BEDDING, AND BACKFILLING DONE IN CONJUNCTION WITH INSTALLATION OF THOSE UTILITIES ON THIS PROJECT.
2. SOILS COMPACTION TEST RESULTS MUST BE SUBMITTED TO THE ENGINEER'S OFFICE FOR ALL FILL MATERIAL FOR ROADS, TRENCH BACKFILL, AND SITE FILL MATERIALS UNDER SLABS AND STRUCTURES. NO FILL MATERIALS SHALL BE PLACED WITHOUT TESTING DURING PLACEMENT. CONTRACTOR SHALL SUBMIT ALL TEST RESULTS TO THE DESIGN ENGINEER AND GOVERNMENTAL AGENCIES.
3. CONTRACTOR SHALL SUBMIT A SCHEDULE, APPROVED IN WRITING BY A QUALIFIED CONSULTING TESTING AGENCY, FOR FREQUENCY, LOCATION, AND TYPE OF ALL PROJECT TESTING. THE CONTRACTOR WILL BE RESPONSIBLE FOR SCHEDULING AND COORDINATION OF ALL TESTING INCLUDING THE FOLLOWING TERMS WHICH SHALL BE TESTED IN ACCORDANCE WITH MAG SPECIFICATIONS:
   - 3.1. SUBGRADE COMPACTION
   - 3.2. BASE COURSE COMPACTION
   - 3.3. ASPHALT PAVEMENT MIX DESIGN QUALITY
   - 3.4. CONCRETE STRENGTH
   - 3.5. TRENCH BEDDING AND BACKFILL
   - 3.6. TESTING FOR UTILITIES, PIPING, AND DRAINAGE SYSTEMS

UTILITIES

1. A UTILITY COORDINATION MEETING SHALL BE COORDINATED BY THE CONTRACTOR PRIOR TO THE START OF ANY WORK. ALL UTILITY ISSUES SHALL BE ADDRESSED IN ACCODANCE WITH MAG 105.6.
2. LOCATION OF UNDERGROUND UTILITIES SHALL BE ACCOMPLISHED IN ACCORDANCE WITH ARS 40-360.22 PRIOR TO ANY EXCAVATION. BLUE STAKE SHALL BE CALLED AT 1-800-STAKE-IT FOR ACCURATE LOCATION OF UTILITIES AS NECESSARY AND PRIOR TO AN EXCAVATION. UTILITIES IF INDICATED ON PLANS ARE APPROXIMATE LOCATIONS ONLY, TAKEN FROM THE UTILITY COMPANY MAPS. IF THE CONTRACTOR ENCOUNTERS ANY LINES NOT INDICATED ON THE DRAWINGS OR MARKED IN THE FIELD BY THE UTILITY COMPANY THAT MAY INTERFERE WITH HIS WORK, HE SHALL NOTIFY THE APPROPRIATE UTILITY COMPANY IMMEDIATELY FOR DISPOSITION OF THOSE FACILITIES.
3. UTILITIES MUST BE LOCATED TO MINIMIZE INTERFERENCE WITH ONE ANOTHER, TO PROVIDE REQUIRED HORIZONTAL AND VERTICAL SEPARATIONS, AND TO PROVIDE MAINTENANCE ACCESS WITHOUT VIOLATING EASEMENT BOUNDARIES. SEPARATION BETWEEN UTILITIES PER MAG STANDARD.
4. ALL WATER MAINS, APPURTENANCES, AND INSTALLATIONS SHALL CONFORM TO A.W.W.A. STANDARDS AND ARIZONA DEPARTMENT OF ENVIRONMENTAL QUALITY AND TOWN OF JEROME REQUIREMENTS. WATER SYSTEMS SHALL BE TESTED PER A.D.E.Q. BULLETIN NO. 10 TO THE APPROPRIATE A.W.W.A. STANDARDS.

CONSTRUCTION STAKING

1. THE ACCURACY OF ALL CONSTRUCTION WORK SHALL BE MAINTAINED AND VERIFIED BY THE OWNER'S SURVEYOR AT THE OWNER'S EXPENSE BY PROVIDING CONSTRUCTION STAKING SUITABLE TO THE TOWN ENGINEER. STAKES WILL BE SET ESTABLISHING LINES AND GRADES (FINISH OR FLOWLINE) FOR ALL CONSTRUCTION INCLUDING ROADS, CURB AND GUTTER, SIDEWALKS, UTILITIES, STRUCTURES, AND OTHER WORK AS CONSIDERED NECESSARY BY THE ENGINEER. ALL SURVEY CONTROL SHALL BE SET BY THE OWNER'S SURVEYOR FROM MONUMENTS ACCEPTABLE TO THE ENGINEER.

GRADING AND EARTHWORK

1. NO GRADING OR TRENCHING WORK SHALL BEGIN PRIOR TO SUPPORTING AND PROTECTING EXISTING ONSITE AND ADJACENT PROPERTY FROM SETTLING, CRACKING, OR OTHER DAMAGE WHICH MIGHT RESULT. CONTRACTOR SHALL VERIFY FROM SOILS REPORT RECOMMENDATIONS THE DEGREE OF DIFFICULTY REQUIRED FOR TRENCHING AND EXCAVATION WORK BASED ON DEPTH AND TYPE OF MATERIALS TO BE ENCOUNTERED.
2. CLEARING AND GRUBBING: EXAMINE SITE AND PROVIDE NECESSARY EQUIPMENT AND LABOR TO REMOVE FROM THE SITE AND DISPOSE OF STUMPS, ROOTS, ROCKS, LOOSE FILL, VEGETATION DEBRIS, AND ANY OTHER OBJECTIONABLE MATERIALS FROM THE BUILDING AND MATERIAL. CLEAN. UNCLASSIFIED ONSITE SOILS MAY BE USED IN GENERAL AS FILL MATERIAL. SEE MAG SPECIFICATIONS 201 AND 215.
3. SUBGRADE PREPARATION: IF THE NATURAL SUBGRADE IS LESS THAN THE REQUIRED DENSITY, IT SHALL BE SCARIFIED AND COMPACTED TO A MINIMUM DEPTH OF TWELVE INCHES OR AS NOTED IN THE SOILS REPORT IMMEDIATELY PRIOR TO PLACING SUBSEQUENT FILL MATERIAL THEREON. THE CONTRACTOR IS RESPONSIBLE FOR MAINTENANCE AND REPAIR OF DAMAGE TO PREPARED SUBGRADE CAUSED BY CONTRACTOR'S OPERATIONS OR PUBLIC TRAFFIC UNTIL ACCEPTANCE OF PROJECT. NO MATERIALS SHALL BE PLACED UPON THE PREPARED SUBGRADE UNTIL IT MEETS THE SPECIFIED REQUIREMENTS. ROADWAY SUBGRADE COMPACTION INCLUDES SUBGRADE UNDER ALL PAVEMENT, CURB, SIDEWALKS, SHOULDERS, AND FILL SLOPES. SUBGRADE TOLERANCES SHALL BE AS SPECIFIED IN MAG SECTION 301. OPEN LANDSCAPED AREAS SHALL BE GRADED TO ±0.2 FEET.
4. IT IS THE RESPONSIBILITY OF THE CONTRACTOR TO CONTACT THE TESTING COMPANY FOR SCHEDULING OF COMPACTION TESTING. THE FREQUENCY OF DENSITY AND MOISTURE TESTS REQUIRED FOR ADEQUATE CONTROL SHALL BE THE RESPONSIBILITY OF THE SOILS ENGINEER WHO SHALL CERTIFY TO THE ENGINEER AND CONTRACTOR AT PROJECT END THAT THE ROADBED FILL IS COMPACTED AS OUTLINED HEREIN. COMPACTION SHALL BE ACHIEVED BY MECHANICAL MEANS. IN NO CASE SHALL STRUCTURE BACKFILLING BE FLOOD WATER SETTLED.
5. ALL SLOPE CONSTRUCTION AND ROADWAY EXCAVATION SHALL CONFORM TO THE REQUIREMENTS OF MAG SPECIFICATIONS SECTIONS 20, 205, 211, 301, AND UBC SECTIONS 7009 AND 8010. CUT AND FILL SLOPES SHALL BE AS INDICATED ON THE DETAILS AND PLANS. CUT AND FILL SLOPE GRADIENTS SHALL NOT EXCEED 2:1 IN STEEPNESS WITHOUT WRITTEN AUTHORIZATION FROM THE SOILS ENGINEER AND EXAMINATION BY THE DESIGN ENGINEER. ALL SLOPE CONDITIONS SHALL BE PROVIDED WITH THE APPROPRIATE BENCHES AS SPECIFIED IN THE REFERENCE DOCUMENTS AND INDICATED ON THE PLANS. IF SOILS CONDITIONS ARE ENCOUNTERED WHICH DO NOT ALLOW THE ESTABLISHMENT OF THE INDICATED CUT OR FILL SLOPES, THE DESIGN ENGINEER AND SOILS ENGINEER SHALL BE CONTACTED IMMEDIATELY TO DETERMINE AN ADJUSTMENT TO THE SLOPE GRADIENT OR TO ESTABLISH A METHOD OF STABILIZATION. ALL FILL SLOPES SHALL BE COMPACTED AS EACH LIFT OF FILL MATERIAL IS PLACED. ALL CUT AND FILL SLOPES SHALL BE UNIFORMLY GRADED TO LINES AND GRADES INDICATED. TOPS OF ALL CUT SLOPES SHALL BE ROUNDED AND ALL UNSTABLE AND LOOSE MATERIAL AT TOP OF SLOPE SHALL BE REMOVED. TOP OF CUT SLOPES OVER 10' HIGH SHALL BE PROVIDED WITH BRO DITCHES FOR DRAINAGE. ALL CUT AND FILL SLOPES SHALL BE REVEGETATED WITH A MIXTURE OF NATIVE GRASSES AND WILD FLOWER SEED OR AS SPECIFIED WITHIN THE LANDSCAPE PLANS. COMPACT ALL SHOULDERS AND BACKFILLS BEHIND ALL STRUCTURES AND WALLS.
6. COMPACT TO THE FOLLOWING SPECIFIED PERCENT OF MAXIMUM DENSITY AS DETERMINED IN ACCORDANCE WITH ASTM D698 AND MAG SECTION 211 OR AS DIRECTED IN THE SOILS REPORT.

MINIMUM PERCENT COMPACTION

SUBGRADE SOIL:

ROADWAY AND STRUCTURE AREAS - - - - - - - - - - - - - -95
PAVED AREAS (PAVEMENTS, SIDEWALKS, & PADS) - - 95

EARTH FILL:

ROADWAY AND STRUCTURE AREAS - - - - - - - - - - - - - -95
PAVED ARES (PAVEMENTS, SIDEWALKS, & PADS) - - - 95
GRASSED AND PLANTING AREAS - - - - - - - - - - - - - - - - 85
AGGREGATE BASE COURSE - - - - - - - - - - - - - - - - - - - 100
BACKFILL AROUND STRUCTURES - - - - - - - - - - - - - - - -95

BACKFILL FOR UTILITY TRENCHES (PER MAG SECTION 601). PROVIDE TYPE 1 BACKFILL OR AS DIRECTED BY APPROPRIATE UTILITY REQUIREMENTS. BACKFILL FOR TRENCHES WITHIN 10' OF STRUCTURES AND WALLS SHALL BE COMPACTED TO 95% UNLESS DIRECTED OTHERWISE BY ENGINEER.

100% ISSUED FOR BID

NO	BY	DATE	REVISIONS	DATE	APP.

Registered Professional Engineer (Civil) CERTIFICATE NO. 70097 TAYLOR B. PIERCE Date Signed ARIZONA, U.S.A. Expires 12/31/28

THESE DRAWINGS ARE THE PROPERTY OF P.A.C.E. AND SHALL NOT BE REPRODUCED IN ANY MANNER NOR BE USED FOR CONSTRUCTION UNLESS STAMPED "ISSUED FOR CONSTRUCTION".

PREPARED BY: PACE
DESIGNED BY: NE
DRAWN BY: DS, WW
CHECKED BY: TP
SCALE: AS NOTED
DATE NOV 2025
JOB NO. B614

TITLE: GENERAL NOTES AND ABBREVIATIONS

JOB: TOWN OF JEROME WASTEWATER TREATMENT PLANT
YAVAPAI CO. AZ

PREPARED BY:
PACE Advanced Water Engineering
8723 E. VIA de COMMERICO, SUITE A-204 | SCOTTSDALE, CA 85258
P: (408) 991-3595 | www.pacewater.com
TAYLOR B. PIERCE R.C.E 70097 DATE

SHEET G2.0
3 OF 99 SHEETS
JOB NO. B614

W:\B614\Engineering\B614-30\sheets\B614 - G2.0 GENERAL NOTES.dwg - Tab: G2.0 - by neddington on 11/18/25 at 3:11:17 PM

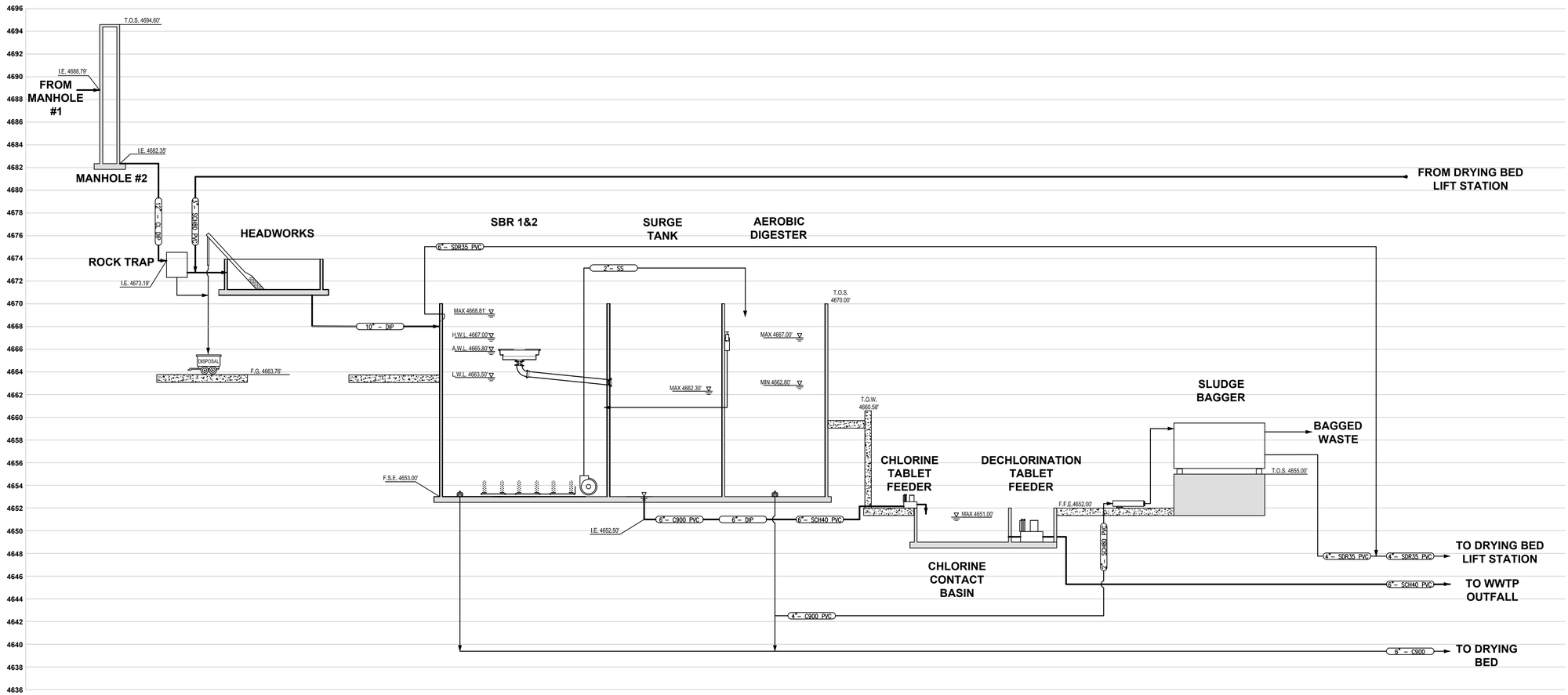

LEGEND

- PUMP
- ROTARY LOBE PUMP
- SLIDE/WEIR GATE
- TELESCOPING VALVE
- MUD VALVE
- PRIMARY FLOW
- SECONDARY FLOW

NO	BY	DATE	REVISIONS	DATE	APP.

Registered Professional Engineer (Civil) CERTIFICATE NO. 70097 TAYLOR B. PIERCE Signed ARIZONA, U.S.A. Expires 12/31/28

PREPARED BY: PACE
DESIGNED BY: NE
DRAWN BY: DS, WW
CHECKED BY: TP
SCALE: AS NOTED
DATE: NOV 2025
JOB NO.: B614

THESE DRAWINGS ARE THE PROPERTY OF P.A.C.E. AND SHALL NOT BE REPRODUCED IN ANY MANNER NOR BE USED FOR CONSTRUCTION UNLESS STAMPED "ISSUED FOR CONSTRUCTION".

TITLE: **HYDRAULIC PROFILE**

JOB: TOWN OF JEROME
WASTEWATER
TREATMENT PLANT
YAVAPAI CO. AZ

100% ISSUED FOR BID

PREPARED BY: TAYLOR B. PIERCE R.C.E 70097 DATE

PACE
Advanced Water Engineering
8723 E. Via de Commercio, Suite 214, Anaheim, CA 92808
P. (408) 991-3595 | www.pacewater.com

SHEET
G3.0
4 OF 99 SHEETS

JOB NO. B614

W:\B614\Engineering\B614-30\sheets\B614-G3.0 HYDRAULIC PROFILE.dwg - Tab: G3.0 - by reddington on 03/02/26 at 9:52:17 AM

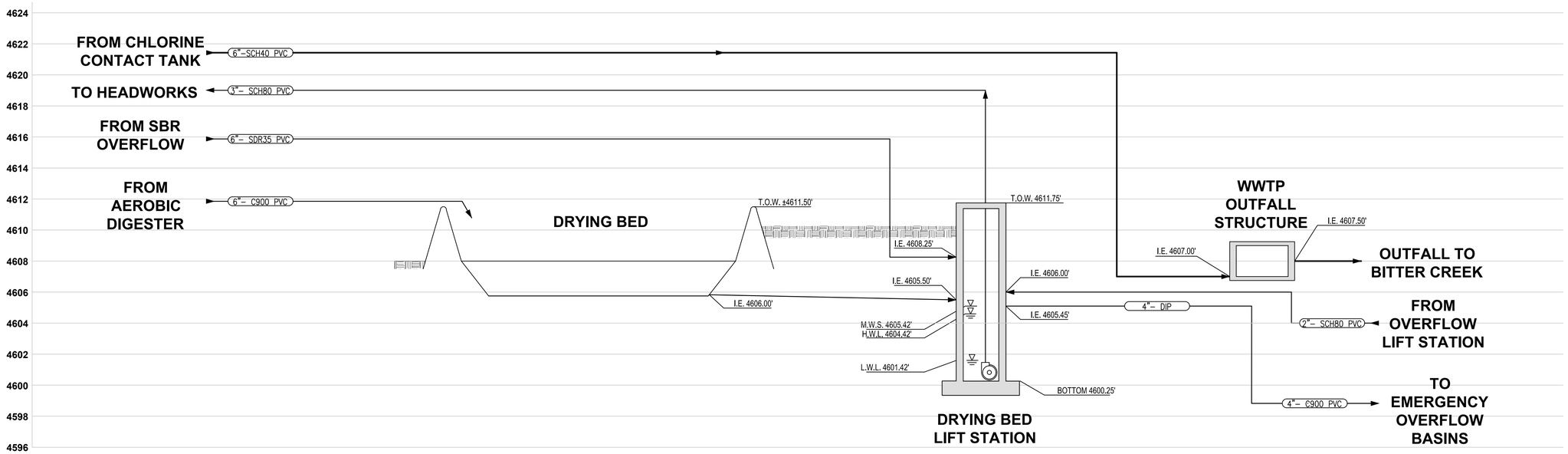

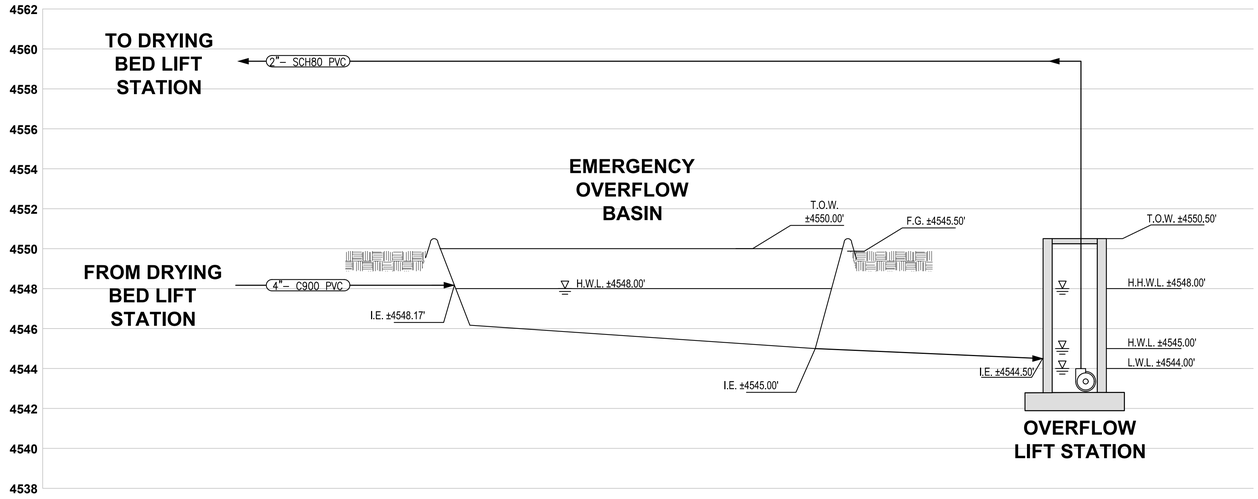

LEGEND

- PUMP
- ROTARY LOBE PUMP
- SLIDE/WEIR GATE
- TELESCOPING VALVE
- MUD VALVE
- PRIMARY FLOW
- SECONDARY FLOW

100% ISSUED FOR BID

HYDRAULIC PROFILE

TOWN OF JEROME
WASTEWATER
TREATMENT PLANT
YAVAPAI CO. AZ

JOB

PREPARED BY: PACE
DESIGNED BY: NE
DRAWN BY: DS, WW
CHECKED BY: TP
SCALE: AS NOTED
DATE: NOV 2025
JOB NO.: B614

Registered Professional Engineer (Civil)
CERTIFICATE NO. 70097
Timothy B. Pierce
Signed
ARIZONA, U.S.A.
Expires 12/31/28

NO	BY	DATE	REVISIONS	DATE	APP.

THESE DRAWINGS ARE THE PROPERTY OF P.A.C.E. AND SHALL NOT BE REPRODUCED IN ANY MANNER NOR BE USED FOR CONSTRUCTION UNLESS STAMPED 'ISSUED FOR CONSTRUCTION'.

PREPARED BY: PACE
Advanced Water Engineering
8723 E. VIA de COMMERCIO, BLDG. 4, SCOTTSDALE, CA 85258
P: (480) 991-3595 | www.pacewater.com
TAYLOR B. PIERCE R.C.E. 70097 DATE

SHEET
G3.1
5 OF 99 SHEETS

JOB NO. B614

W:\B614\Engineering\B614-3\Sheets\B614-G3.0-HYDRAULIC PROFILE.dwg - Tab: G3.1 - by roddington on 03/02/26 at 9:52:17 AM

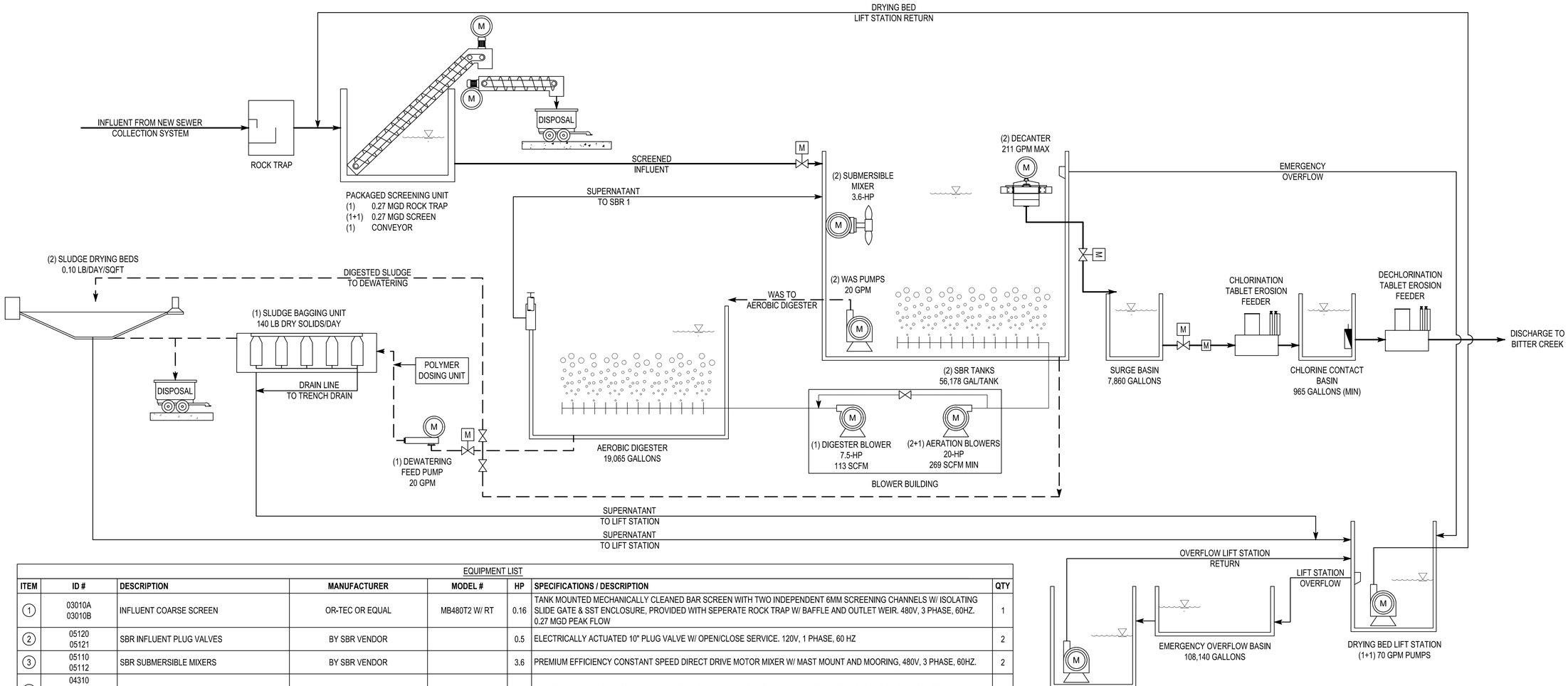

EQUIPMENT LIST

ITEM	ID #	DESCRIPTION	MANUFACTURER	MODEL #	HP	SPECIFICATIONS / DESCRIPTION	QTY
1	03010A 03010B	INFLUENT COARSE SCREEN	OR-TEC OR EQUAL	MB480T2 W/ RT	0.16	TANK MOUNTED MECHANICALLY CLEANED BAR SCREEN WITH TWO INDEPENDENT 6MM SCREENING CHANNELS W/ ISOLATING SLIDE GATE & SST ENCLOSURE, PROVIDED WITH SEPERATE ROCK TRAP W/ BAFFLE AND OUTLET WEIR. 480V, 3 PHASE, 60HZ. 0.27 MGD PEAK FLOW	1
2	05120 05121	SBR INFLUENT PLUG VALVES	BY SBR VENDOR		0.5	ELECTRICALLY ACTUATED 10" PLUG VALVE W/ OPEN/CLOSE SERVICE. 120V, 1 PHASE, 60 HZ	2
3	05110 05112	SBR SUBMERSIBLE MIXERS	BY SBR VENDOR		3.6	PREMIUM EFFICIENCY CONSTANT SPEED DIRECT DRIVE MOTOR MIXER W/ MAST MOUNT AND MOORING, 480V, 3 PHASE, 60HZ.	2
4	04310 04311 04312	SBR AERATION BLOWERS	BY SBR VENDOR		20	VFD CONTROLLED PD BLOWER UNIT W/ SOUND ATTENUATED ENCLOSURE, 361 SCFM @ 6.63 PSI, 480V, 3 PHASE, 60HZ.	3
5	04313	DIGESTER AERATION BLOWER	BY SBR VENDOR		7.5	VFD CONTROLLED PD BLOWER UNIT W/ SOUND ATTENUATED ENCLOSURE, 110 SCFM @ 6.63 PSI, 480V, 3 PHASE, 60HZ. CONTROLLED	1
6	04180 04181	RETREIVABLE FINE BUBBLE DIFFUSER SYSTEM	BY SBR VENDOR		N/A	RETRIEVABLE DIFFUSER RACK ASSEMBLY WITH MIN 30" EPDM TUBE DIFFUSERS, RANGE 1.0 CFM - 10.0 CFM (1 - 5 SCFM DESIGN) 2/ W EPDM FLEXIBLE DROP LINE AND QUICK DISCONNECT FITTINGS	60
7	04280	COARSE BUBBLE DIFFUSER SYSTEM	BY SBR VENDOR		N/A	3" EPDM DISK COARSE BUBBLE DIFFUSERS, RANGE 0.5 CFM - 5.0 CFM (0.5 - 2 SCFM DESIGN) 3/8" CXN	12
8	05100 05101	WAS TRANSFER PUMPS	BY SBR VENDOR		1.8	20 GPM @ 15' TDH SUBMERSIBLE NON-CLOG SLUDGE PUMP, 1.8 HP 480V, 3 PHASE, 60HZ W/ BASE AND SS GUIDE RAIL	2
9	05111 05113	SOLIDS EXCLUDING FLOATING DECANTER	BY SBR VENDOR		0.5	211 GPM FLOATING DECANTER W/ 120V, 1 PHASE, 60 HZ ACTUATED SUBMERGED WEIR, MOORING AND 6" DISCHARGE HOSE ASSEMBLY	2
10	05121 05123	SBR DECANT VALVE	BY SBR VENDOR		0.33	ELECTRICALLY ACTUATED 6" BUTTERFLY VALVE W/ MODULATING SERVICE, 480V, 3 PHASE, 60HZ	2
11	06221	TRANSFER/EFFLUENT VALVE	BY SBR VENDOR		0.33	ELECTRICALLY ACTUATED 6" BUTTERFLY VALVE W/ MODULATING SERVICE, 480V, 3 PHASE, 60HZ	1
12	06290	CHLORINATION EROSION TABLET FEEDER	NORWECO OR EQUAL	SERIES 4000	N/A	6" SCH 80 PVC HUB TABLET FEEDER W/ ADJUSTABLE INLET BAFFLE AND OUTLET WEIR AND 24" RISER ASSEMBLIES	1
13	05291	DECHLORINATION EROSION TABLET FEEDER	NORWECO OR EQUAL	SERIES 4000	N/A	6" SCH 80 PVC HUB TABLET FEEDER W/ ADJUSTABLE INLET BAFFLE AND OUTLET WEIR AND 24" RISER ASSEMBLIES	1
14	08400	DEWATERING FEED PUMP	BOERGER OR EQUAL	AN 40	3.0	20 GPM ROTARY LOBE SLUDGE PUMP, 3 HP 480V, 3 PHASE, 60HZ	1
15	08410	DRY POLYMER MAKE-DOWN AND FEED UNIT	PROMINENT OR EQUAL	ULTROMAT MT 140	0.25	POLYPROPOLENE PREP TANK W/ ELECTRIC STIRRER, WETTING CONE AND INJECTOR 480V, 3 PHASE, 60 HZ	1
16	08401	POLYMER METERING PUMP	PROMINENT OR EQUAL	DULCOFLEX - DFXa 0530	0.16	0.08 - 7.93 GPH SHELF-MOUNTED PERISTALTIC METERING PUMP, 73 PSI MAX BACK PRESSURE, 1/2" x 3/8" POLYURETHANE CONNECTOR TUBING, 115V, 1-PH SERVICE	1
17	08490	SLUDGE BAGGER SYSTEM	ENVIRODYNE, OR EQUAL	585-8i	N/A	20 GPM 8-BAG SLUDGE DEWATERING SYSTEM MAX LOADING RATE OF 20 GPM OR 100 #/HR - 25# ACTIVE POLYMER / TON DS	1
18	07400	DRYING BED DRAIN RETURN PUMPS	GRUNDFOS OR EQUAL	SEG.A15.40.EX.2.60H	4.16	70 GPM @ 90' TDH SUBMERSIBLE GRINDER PUMP, 5 HP 480V, 3 PHASE, 60HZ W/ BASE AND SS GUIDE RAIL	2
19	07401	PACKAGED OVERFLOW LIFT STATION	E ONE OR EQUAL	SP84S	2	31 GPM @ 82' TDH SDUPLEX GRINDER PRE-PACKAGED PUMP STATION, 2 HP 240V, 1 PHASE, 60 HZ W/ INTEGRAL FLOAT CONTROLS, PANEL AND SINGLE WARNING BEACON	1
20	SEE PID	PRESSURE TRANSDUCER	BY SBR VENDOR		N/A	304 SS SUBMERSIBLE PRESSURE TRANSDUCER WITH 4-20 mA SIGNAL OUTPUT	4
21	SEE PID	LEVEL SENSOR	BY SBR VENDOR		N/A	316 SS FLOAT SWITCH WITH THREE-CONDUCTOR ELECTRICAL CABLE	4
22	05160A 05161A	DISSOLVED OXYGEN CONTROLLER	BY SBR VENDOR		N/A	NEMA 4X ENCLOSURE WITH AC 100-230 VAC POWER SUPPLY, 4-20 mA SIGNAL OUTPUT	2
23	05160B 05161B	DISSOLVED OXYGEN PROBE	BY SBR VENDOR		N/A	304 SS PROBE	2
24	06240	EFFLUENT FLOW METER	BY SBR VENDOR		N/A	6" ELECTROMAGNETIC FLOW METER W/ TRAMSMITTER, ±1%ACCURACY 5D/3D, WITH 4-20 mA SIGNAL OUTPUT	1
25	01003	STANDBY GENERATOR			N/A	600 KW STANDBY GENERATOR W/ SOUND ATTENUATED OUTDOOR ENCLOSURE AND SUB BASE FUEL TANK	1

DESIGN FLOWS:

MAX MONTH AVE DAY FLOW:	90,000 GPD
MAX PEAK DAY FLOW:	135,000 GPD
PEAK HOUR FLOW:	270,000 GPD

INFLUENT PARAMETERS:

BOD:	360 MG/L
TSS:	250 MG/L
TKN:	40 MG/L

EFFLUENT PARAMETERS:

BOD:	<30 MG/L
TSS:	<30 MG/L
TN:	<10 MG/L
FECAL COLIFORM:	200 CFU/100 ML (4/7 SAMPLES); 800 CFU/100 ML (SINGLE SAMPLE MAX)

LEGEND

- FLOW METER
- PUMP
- BLOWER
- ROTARY LOBE PUMP
- ISOLATION VALVE/GATE
- MOTORIZED VALVE
- SLIDE/WEIR GATE
- TELESCOPING VALVE
- MIXER
- PRIMARY FLOW
- SECONDARY FLOW
- SLUDGE FLOW

100% ISSUED FOR BID

NO	BY	DATE	REVISIONS	DATE	APP.

Registered Professional Engineer (Civil) CERTIFICATE NO. 70097 Nathan E. Pace Signed ARIZONA, U.S.A. Expires 12/31/28

THESE DRAWINGS ARE THE PROPERTY OF P.A.C.E. AND SHALL NOT BE REPRODUCED IN ANY MANNER NOR BE USED FOR CONSTRUCTION UNLESS STAMPED "ISSUED FOR CONSTRUCTION".

PREPARED BY: PACE
DESIGNED BY: NE
DRAWN BY: DS, WW
CHECKED BY: TP
SCALE: AS NOTED
DATE: NOV 2025
JOB NO.: B614

TITLE: PROCESS FLOW DIAGRAM

JOB: TOWN OF JEROME WASTEWATER TREATMENT PLANT — YAVAPAI CO. AZ

PREPARED BY:
PACE
Advanced Water Engineering
8733 E. Via de Ventura, Suite F-110, SCOTTSDALE, CA 85258
P: (480) 991-3985 | www.pacewater.com
TAYLOR B. PIERCE R.C.E 70097 DATE

SHEET
G3.2
6 OF 99 SHEETS

JOB NO. B614

W:\B614\Engineering\B614-30\sheets\B614-G3.0 HYDRAULIC PROFILE.dwg - Tab: G3.2 - by neddigton on 03/02/26 at 9:32:17 AM

1 GENERAL

1.1 ALL PAVING, GRADING PIPING AND UTILITY LINE CONSTRUCTION WORK WITHIN THE PUBLIC RIGHT-OF-WAY, ON PRIVATE STREETS, ACCESS WAYS, LOT GRADING, MATERIALS, AND WORKMANSHIP SHALL COMPLY WITH TOWN OF JEROME ENGINEERING STANDARDS AND SPECIFICATIONS, AND SHALL CONFORM TO THE LATEST MARICOPA ASSOCIATION OF GOVERNMENTS (MAG) AND A.D.O.T. STANDARD DETAILS AND SPECIFICATIONS. GRADING WORK SHALL CONFORM TO MAG SPECS, THE SOILS REPORT* AND CHAPTER 70 ENTITLED "EXCAVATION AND GRADING" OF THE UNIFORM BUILDING CODE (UBC) LATEST EDITION, SUBSECTIONS 7001 TO 7005, 7009 TO 7013, FIGURES 70-1 AND 70-2 AND AS STATED THEREIN. LOCAL MUNICIPAL STANDARD DETAILS WILL CONTINUE TO APPLY WHERE NOT ADOPTED OR INCLUDED BY MAG. THE FOLLOWING NOTES AND SPECIFICATIONS ARE HEREBY MADE A PART OF THE CONTRACT DOCUMENTS AND PROJECT SPECIFICATIONS. WHERE THERE EXISTS A CONFLICT BETWEEN THESE NOTES, MAG SPECS, UBC, THE SOILS REPORT* OR THE PROJECT SPECIFICATIONS, THE MORE STRINGENT OF THE REQUIREMENTS SHALL GOVERN UNLESS PRIOR CLARIFICATION FROM THE ENGINEER HAS BEEN GIVEN IN WRITING TO THE CONTRACTOR. THE CONTRACTOR AS STATED HEREIN SHALL MEAN THE GENERAL CONTRACTOR AND HIS ASSOCIATED SUBCONTRACTORS. THE GENERAL CONTRACTOR IS RESPONSIBLE FOR THE COORDINATION AND PERFORMANCE OF THE WORK OF ALL OF HIS SUBCONTRACTORS AND SUPPLIERS.

1.2 ALL WORK SHALL BE BID AND INSTALLED BY THE CONTRACTOR COMPLETE AND OPERATIONAL TO LINES, GRADES AND FUNCTIONS INDICATED ON ALL PLANS AND SPECIFICATIONS. PROVIDE ALL LABOR, MATERIALS, EQUIPMENT AND SERVICES NECESSARY TO COMPLETE ALL PROJECT EARTHWORK AND SITE WORK INCLUDING BUT NOT LIMITED TO: SITE CLEARING, GRUBBING, DEMOLITION'S, DEBRIS REMOVALS FROM THE SITE, IMPORT AND/OR EXPORT OF SOILS AND OTHER MATERIALS TO AND FROM THE SITE, BORROW MATERIALS, TEMPORARY SOILS MATERIAL STOCKPILING, BACKFILL OF ONSITE BORROW PITS, MOVING OF MATERIALS, CUT AND FILL, SLOPES, SOILS AND BANK STABILIZATION AND PROTECTION, BERMING, ROADWAY EXCAVATIONS, RELOCATION'S, STRUCTURE EXCAVATIONS, TRENCHING, ALL BACKFILLING, SITE GRADING, PAVING, PIPING, UTILITY LINE AND STORM DRAINAGE CONSTRUCTION, CURBS, SITE CONCRETE WORK AND OTHER MISCELLANEOUS SITE WORK STRUCTURES AND ITEMS INDICATED ON THE PLANS AND IN THE CONTRACT DOCUMENTS.

1.4 ANY QUANTITIES SHOWN ON PLANS ARE NOT VERIFIED BY THE ENGINEER. QUANTITIES ARE APPROXIMATE ONLY AND INTENDED AS A GUIDE FOR ESTIMATING PURPOSES. THE CONTRACTOR IS RESPONSIBLE FOR PROVIDING HIS OWN QUANTITY TAKE OFFS. THE CONTRACTOR SHALL VISIT THE SITE AND REVIEW THE SOILS CONDITIONS AND THE SOILS REPORT* WITH THE PROJECT SOILS ENGINEER PRIOR TO BIDDING THIS PROJECT. ANY DISCREPANCIES IN SITE MATERIALS SHALL BE BROUGHT TO THE ATTENTION OF THE DESIGN ENGINEER 7 DAYS MINIMUM PRIOR TO BIDDING FOR REVIEW. ALL SHRINK OF EARTH MATERIAL OR EXCESS MATERIAL FROM UTILITY TRENCHES AND FOUNDATIONS SHALL BE INCLUDED IN THE CONTRACTOR'S BID.

1.5 THE ENGINEER MAY REQUIRE THE SUBMITTAL OF A "CERTIFICATE OF COMPLIANCE" AND/OR "MANUFACTURER'S GUIDELINES" FOR ANY MATERIALS USED IN THE WORK. MANUFACTURER'S GUIDELINES SHALL CONSISTS OF WRITTEN INSTRUCTIONS FOR SHIPPING, HANDLING, UNLOADING, CUTTING, JOINING, INSTALLATION, STORAGE, AND/OR ANY OTHER FACETS OF CONSTRUCTION

1.6 THE ENGINEER MAY REQUIRE ANY MATERIALS USED IN THE WORK TO BE TESTED ACCORDING TO AASHTO AND ASTM STANDARDS. THE CONTRACTOR SHALL, AT HIS EXPENSE, SUPPLY CERTIFICATES OR RESULTS OF TESTING.

1.7 ALL WORK AND MATERIALS NOT CONFORMING TO SPECIFICATIONS OR PERFORMED WITHOUT THE CONSENT OF THE OWNER OR HIS REPRESENTATIVE WILL BE SUBJECT TO REJECTION BY THE OWNER AND/OR ENGINEER AND REPLACED AT THE CONTRACTOR'S EXPENSE.

1.8 THE CONTRACTOR SHALL GUARD AGAINST DAMAGE DURING CONSTRUCTION TO ADJACENT PROPERTIES, FENCES, WALLS AND UTILITY EQUIPMENT. ANY ITEMS DAMAGED BY CONSTRUCTION SHALL BE REPLACED WITH SAME KIND OR BETTER AT CONTRACTOR'S EXPENSE.

1.9 NO CONSTRUCTION SHALL BEGIN UNTIL CONFLICTING UNDERGROUND UTILITY MITIGATING CONSTRUCTION IS COMPLETED, IF ANY, AND UNTIL PIPE SLEEVES AND SERVICE STUBS TO ALL BUILDINGS OR LOTS HAVE BEEN EXTENDED.

1.10 NO EXISTING SURVEY MONUMENTATION SHALL BE REMOVED OR DISTURBED BY THE CONTRACTOR WITHOUT NOTIFICATION AND APPROVAL OF THE PROJECT SURVEYOR. THE CONTRACTOR SHALL CONTACT THE PROJECT SURVEYOR FOR THE SETTING OF REFERENCE POINTS 48 HOURS PRIOR TO DISTURBING OR REMOVING ANY MONUMENTS. THE CONTRACTOR SHALL BE FINANCIALLY RESPONSIBLE FOR COSTS TO REESTABLISH MONUMENTATION OR CONTROLS REMOVED WITHOUT PRIOR NOTICE AND APPROVAL.

1.11 TRAFFIC CONTROL SHALL CONFORM TO THE LOCAL MUNICIPAL ADOPTED STANDARDS.

1.12 THESE PLANS ARE SUBJECT TO THE INTERPRETATION OF THE INTENT BY THE ENGINEER. ANY QUESTIONS REGARDING THESE PLANS MUST BE GIVEN TO THE ENGINEER AND YOU MUST HAVE RECEIVED A RESPONSE TO THE QUESTION. ANYONE WHO TAKES IT UPON THEMSELVES TO MAKE AN INTERPRETATION OF THE DRAWINGS OR MAKES REVISIONS TO THE SAME WITHOUT CONFERRING WITH THE DESIGN ENGINEER SHALL BE RESPONSIBLE FOR THE CONSEQUENCES THEREOF.

1.13 CONTRACTOR SHALL COORDINATE HIS WORK WITH THE DESIGN ENGINEER, OWNER, PUBLIC UTILITY COMPANIES AND OTHER ASSOCIATED TRADES ON AND ADJACENT TO THE PROJECT SITE. COORDINATE INSTALLATION OF ALL PUBLIC AND PRIVATE UNDERGROUND UTILITIES, PIPES, CONDUITS AND PIPE SLEEVE SIZES AND LOCATIONS PRIOR TO THEIR PLACEMENT. INSTALLATION: THE CONTRACTOR IS RESPONSIBLE FOR SETTING CAPPED SLEEVES AND PROVIDING TYPE 1 COMPACTION IN ALL BACKFILLED TRENCHES IN PAVED AREAS AND EASEMENTS. PROVIDE TRACER WIRE AND MARKER AT GRADE LEVEL FOR FUTURE LOCATING.

1.14 CONTRACTOR SHALL BE RESPONSIBLE FOR FINANCIAL REIMBURSEMENT TO THE OWNER AND ENGINEER FOR THE FOLLOWING ADDITIONAL ENGINEERING SERVICES SHOULD THEY OCCUR, AND SUCH A/E DESIGN SERVICES WILL BE DEDUCTED FROM CONTRACTOR'S FINAL PAYMENTS BY THE OWNER.

A. REINSPECTION, COORDINATION AND EXTRA TESTING OR RETESTING COSTS INCURRED BECAUSE OF IMPROPER OR FAULTY CONSTRUCTION. ONE TIME TESTING AND INSPECTION IS PROVIDED FOR BY THE OWNER. ALL OTHER TESTING IS THE CONTRACTOR'S RESPONSIBILITY.

B. ADDITIONAL STAKING NOT INCLUDED IN CONTRACT OR RESTAKING AS REQUESTED BY CONTRACTOR.

C. CHANGES AND SUBSTITUTIONS IN MATERIALS CONSTRUCTION METHODS, REQUESTED BY THE CONTRACTOR, THAT MUST BE REVIEWED, RECALCULATED OR APPROVED BY ENGINEER.

D. ENGINEERING DESIGN SERVICES REQUESTED BY THE CONTRACTOR OR CAUSED BY ERRORS OR OMISSIONS BY THE CONTRACTOR.

E. ANY ENGINEERING DESIGN APPROVED BY OTHERS AND SUBMITTED FOR REVIEW. THESE SHALL BEAR THE SEAL OF AN ENGINEER REGISTERED IN ARIZONA.

ANY DIFFERENCE BETWEEN PLANS AND SPECIFICATIONS AND QUESTIONS AS TO THEIR MEANING SHALL BE DETERMINED PRIOR TO AWARD OF THE CONTRACT AND SHALL BE INTERPRETED BY THE ENGINEER. THE GENERAL INTENT AND MEANING OF THE PLANS AND SPECIFICATIONS WILL GOVERN AND SHALL NOT WARRANT ANY ADDITIONAL COMPENSATION TO THE CONTRACTOR. THE ENGINEER WILL PROVIDE FULL INSTRUCTIONS WHEN DISCREPANCIES ARE DISCOVERED IN THE DOCUMENTS.

1.16 THE CONTRACTOR SHALL BE RESPONSIBLE FOR VERIFYING THE LIMITS OF THE WORK AREA FOR ALL PHASES OF THE WORK PRIOR TO BEGINNING CONSTRUCTION OF THOSE PHASES. ALL CONSTRUCTION LIMITS, AREAS OF WORK, SETBACKS, PERIMETERS, ADJACENT PROPERTY LINES, BOUNDARIES, AND OTHER CRITERIA DEFINING THE LIMITS OF THE CONTRACTOR'S WORK AREA AND LIMITS, SHALL BE STAKED BY THE CONTRACTOR'S SURVEYOR PRIOR TO CONSTRUCTION OR CLEARING OF THE SITE. THE CONTRACTOR SHALL BE RESPONSIBLE FOR FAMILIARIZING HIMSELF WITH THE EXTENT OF WORK TO BE DONE IN EACH SEPARATE PHASE OF THE PROJECT, AND ANY WORK NECESSARY IN INACTIVE PHASES REQUIRED TO DEEM THE ACTIVE PHASES FINISHED, SAFE, AND SERVICEABLE.

1.17 THE CONTRACTOR OR SUBCONTRACTORS SHALL NOT DEVIATE FROM THESE PLANS OR MAKE FIELD CHANGES WITHOUT REQUESTING THE ENGINEER TO PROVIDE, IN WRITING, THE APPROVAL OF THESE MODIFICATIONS. ANY CHANGES MADE WITHOUT APPROVAL OF THE DESIGN ENGINEER ARE SUBJECT TO REMOVAL AT THE EXPENSE OF THE CONTRACTOR.

1.18 THE DESIGN ENGINEER RESERVES THE RIGHT TO MAKE MINOR FIELD MODIFICATIONS TO GRADES AND STRUCTURE DESIGNS TO ACCOMMODATE FIELD CONDITIONS FOUND ON SITE. THIS INCLUDES BUT IS NOT LIMITED TO MINOR MODIFICATIONS TO GRADE, ALIGNMENT, SLOPE OR STRUCTURE LOCATIONS. THE ENGINEER SHALL HAVE THE RIGHT TO MAKE SUCH CHANGES IN WRITING IN THE LOCATION AND QUANTITIES OF WORK AS MAY BE DEEMED ADVISABLE.

1.19 NO JOB WILL BE CONSIDERED COMPLETE UNTIL FINE GRADING IS COMPLETE AND ALL CURBS, PAVEMENT AND SIDEWALKS HAVE BEEN SWEPT CLEAN OF ALL DIRT AND DEBRIS, ALL SURVEY MONUMENTS ARE INSTALLED AND ALL VALVES, MANHOLES AND BOXES HAVE BEEN ADJUSTED ACCORDING TO THE PLANS AND STANDARD DETAILS.

1.20 EXISTING GRADES INDICATED ON PLANS ARE BASED ON PREGRADING CONDITIONS. LOSSES IN MATERIAL DUE TO SHRINKAGE OF MATERIAL, DEMOLITION OF EXISTING SITE FEATURES, CLEARING AND GRUBBING OF THE SITE SHALL BE INCLUDED IN CONTRACTOR'S BID.

1.21 SHOP DRAWINGS SHALL BE PROVIDED BY THE CONTRACTOR PER MAG SECTION 105.2.

2 PERMITS

2.1 CONTRACTOR SHALL OBTAIN ALL PERMITS AT HIS OWN EXPENSE FROM LOCAL MUNICIPAL AND AIR POLLUTION CONTROL AUTHORITIES PRIOR TO BEGINNING CONSTRUCTION.

2.2 REQUIRED PERMITS SHALL BE SECURED BY THE CONTRACTOR FROM THE APPROPRIATE AGENCIES. A.D.O.T. REQUIRES THAT A PERMIT BE ISSUED FROM THEIR OFFICE FOR ANY WORK WITHIN STATE RIGHT-OF-WAY. FEDERAL PERMITS, UTILITY CO. AND OTHER PERMITS MAY BE REQUIRED. A.D.E.Q. REQUIRES PERMITS BE ISSUED PRIOR TO NEW CONSTRUCTION, EXTENSION TO, OR MODIFICATION OF WATER DISTRIBUTION SYSTEM, SEWAGE COLLECTION OR INDIVIDUAL SEWAGE TREATMENT SYSTEM. A RIGHT-OF-WAY PERMIT, ISSUED BY THE TOWN, IS REQUIRED FOR ANY EXCAVATION OR GRADING (INCLUDING PLACEMENT OF FILL). PRIOR TO CONSTRUCTION THE APPROPRIATE AGENCIES SHALL BE NOTIFIED BY THE CONTRACTOR AS REQUIRED BY THE PERMITS.

2.3 THE CONTRACTOR SHALL BE RESPONSIBLE FOR OBTAINING AT HIS OWN EXPENSE ALL APPROPRIATE INSURANCE FORMS FOR PERMIT REQUIREMENTS.

2.4 IT SHALL BE THE RESPONSIBILITY OF THE CONTRACTOR TO ARRANGE FOR THE RELOCATION AND RELOCATION COSTS, IF ANY, OF ALL UTILITIES, AND SUBMIT A UTILITY RELOCATION SCHEDULE TO THE MUNICIPALITY AND DESIGN ENGINEER PRIOR TO CONSTRUCTION. ALL PUBLIC UTILITY EQUIPMENT POLES, BOXES, STRUCTURES AND MUNICIPAL UTILITY COMPANY EQUIPMENT SHALL BE RELOCATED BY THE APPROPRIATE UTILITY COMPANY OR MUNICIPALITY BEFORE ANY WORK IS STARTED.

3 APPROVALS

3.1 THE CONTRACTOR IS TO USE ONLY THAT OFFICIAL CONSTRUCTION SET OF DRAWINGS WHICH CONTAINS THE APPROVAL OF THE GOVERNMENT AGENCY/UTILITY SIGNED ON THE COVER SHEET OF THE PLANS. THE CONTRACTOR SHALL NOT PLACE BIDS OR START CONSTRUCTION ON A SET OF DRAWINGS UNSIGNED BY THE GOVERNMENT AGENCY AND/OR MARKED "NOT FOR CONSTRUCTION".

4 RECORD DRAWINGS

4.1 IT IS THE RESPONSIBILITY OF THE CONTRACTOR TO PROVIDE AND KEEP AN UPDATED RECORD SET OF AS-BUILT INFORMATION DRAWINGS IN GOOD CONDITION ON THE JOB SITE AND PROVIDE THE DESIGN ENGINEER AT COMPLETION OF THE WORK, WITH THE RECORD SET SHOWING FIELD VERIFIED LOCATIONS OF ALL VALVES, BOXES, MANHOLES, UTILITY POLES, PIPE SLEEVES, UTILITY ENCASEMENT AND OTHER UTILITY LINES AND EQUIPMENT ABOVE AND BELOW GROUND WHICH THE CONTRACTOR ENCOUNTERS AND INSTALLS IN HIS AREA OF WORK.

4.2 ACCEPTANCE OF THE COMPLETED PAVING, GRADING OR UTILITY INSTALLATION WILL NOT BE GIVEN UNTIL REPRODUCIBLE AS-BUILT PLANS HAVE BEEN SUBMITTED BY THE ENGINEER AND APPROVED BY THE LOCAL GOVERNING AGENCY.

5 OBSERVATION

5.1 ALL MATERIALS USED AND ALL WORK DONE BY THE CONTRACTOR SHALL BE SUBJECT AT ALL TIMES TO THE INSPECTION, TESTING AND APPROVAL OF THE ENGINEER AND GOVERNING AGENCY. SPECIAL INSPECTION AND TESTING SERVICES SHALL BE PROVIDED AT THE OWNER'S EXPENSE, AS REQUIRED BY THE TOWN ENGINEER.

5.2 THE CONTRACTOR SHALL CONTACT THE APPROPRIATE PUBLIC UTILITY COMPANIES FOR INSPECTION OF TRENCHING, BEDDING AND BACKFILLING DONE IN CONJUNCTION WITH INSTALLATION OF THOSE UTILITIES ON THIS PROJECT.

5.3 SUBMITTAL OF AN ENGINEER'S CERTIFICATE OF COMPLETION IS REQUIRED BY A.D.E.Q. FOR ALL WATER AND SEWER SYSTEM CONSTRUCTION. RELATED INSPECTION AND TESTING SHALL BE PROVIDED BY THE OWNER'S ENGINEER AT THE OWNER'S EXPENSE.

5.4 SOILS COMPACTION TEST RESULTS MUST BE SUBMITTED TO THE ENGINEER'S OFFICE FOR ALL FILL MATERIAL FOR ROADS, TRENCH BACKFILL AND SITE FILL MATERIALS UNDER SLABS AND STRUCTURES. NO FILL MATERIALS SHALL BE PLACED WITHOUT TESTING DURING PLACEMENT. NO EARTH MATERIAL SHALL BE PLACED WITHOUT APPROVAL OF THE PREVIOUS LIFTS. THE CONTRACTOR SHALL SUBMIT ALL TEST RESULTS TO THE DESIGN ENGINEER AND GOVERNMENTAL AGENCIES.

5.5 CONTRACTOR SHALL SUBMIT A SCHEDULE, APPROVED IN WRITING BY A QUALIFIED CONSULTING TESTING AGENCY, FOR FREQUENCY, LOCATION AND TYPE OF ALL PROJECT TESTING. THE CONTRACTOR WILL BE RESPONSIBLE FOR SCHEDULING AND COORDINATION OF ALL TESTING INCLUDING THE FOLLOWING ITEMS WHICH SHALL BE TESTED IN ACCORDANCE WITH MAG SPECIFICATIONS...

1. SUBGRADE COMPACTION
2. BASE COURSE COMPACTION
3. ASPHALT PAVEMENT MIX DESIGN QUALITY
4. CONCRETE STRENGTH
5. TRENCH BEDDING AND BACKFILL
6. TESTING FOR UTILITIES, PIPING AND DRAINAGE SYSTEMS

5.6 THE TOWN SHALL BE NOTIFIED BY THE CONTRACTOR 24 HOURS PRIOR TO BEGINNING DIFFERENT PHASES OF CONSTRUCTION SO THAT CITY INSPECTIONS MAY BE SCHEDULED.

6 FINAL ACCEPTANCE

6.1 FINAL ACCEPTANCE OF THE CONSTRUCTION, BY THE TOWN ENGINEER, IS REQUIRED BEFORE RELEASING OF A PERMIT AND OR TRANSFERRING OWNERSHIP OF THE IMPROVEMENTS TO THE CITY.

6.2 APPROVAL OF A PORTION OF THE WORK IN PROGRESS DOES NOT GUARANTEE ITS FINAL ACCEPTANCE. TESTING AND EVALUATION MAY CONTINUE UNTIL WRITTEN FINAL ACCEPTANCE OF A COMPLETE WORKABLE UNIT. ACCEPTANCE OF COMPLETED IMPROVEMENTS WILL NOT BE GIVEN UNTIL DEFECTIVE OR UNAUTHORIZED WORK IS REMOVED, AND FINAL CLEANUP IS COMPLETE.

7 UTILITIES

7.1 A UTILITY COORDINATION MEETING SHALL BE COORDINATED BY THE CONTRACTOR PRIOR TO THE START OF ANY WORK. ALL UTILITY ISSUES SHALL BE ADDRESSED IN ACCORDANCE WITH MAG SECTION 105.6.

7.2 LOCATION OF UNDERGROUND UTILITIES SHALL BE ACCOMPLISHED IN ACCORDANCE WITH ARS 40-360.22 PRIOR TO ANY EXCAVATION. BLUE STAKE SHALL BE CALLED AT 1-800-STAKE-IT FOR ACCURATE LOCATION OF UTILITIES AS NECESSARY AND PRIOR TO ANY EXCAVATION. UTILITIES IF INDICATED ON PLANS ARE APPROXIMATE LOCATIONS ONLY, TAKEN FROM THE UTILITY COMPANY MAPS. IF THE CONTRACTOR ENCOUNTERS ANY LINES NOT INDICATED ON THE DRAWINGS OR MARKED IN THE FIELD BY THE UTILITY COMPANY THAT MAY INTERFERE WITH HIS WORK, HE SHALL NOTIFY THE APPROPRIATE UTILITY COMPANY IMMEDIATELY FOR DISPOSITION OF THOSE FACILITIES.

7.3 THE CONTRACTOR IS RESPONSIBLE FOR PREPARATION OF GRADE, TRENCHING, BACKFILLING, PAD CONSTRUCTION AND CONCRETE PADS FOR UTILITY EQUIPMENT INSTALLED ON THIS PROJECT. CONTRACTOR SHALL CONTACT LOCAL UTILITY COMPANIES FOR DETAILS AND REQUIREMENTS.

7.4 UTILITIES MUST BE LOCATED TO MINIMIZE INTERFERENCE WITH ONE ANOTHER, TO PROVIDE REQUIRED HORIZONTAL AND VERTICAL SEPARATIONS, AND TO PROVIDE MAINTENANCE ACCESS WITHOUT VIOLATING EASEMENT BOUNDARIES. SEPARATION BETWEEN UTILITIES PER MAG STANDARD

7.5 ALL UTILITY SLEEVES SHALL BE PLACED PRIOR TO SUBBASE CONSTRUCTION AND PAVING. CONTACT APPROPRIATE UTILITY COMPANIES FOR REQUIREMENTS IN ALL AREAS.

7.6 ALL WATER MAINS, APPURTENANCES, AND INSTALLATION SHALL CONFORM TO A.W.W.A. STANDARDS AND ARIZONA DEPARTMENT OF ENVIRONMENTAL QUALITY, AND TOWN OF JEROME REQUIREMENTS. WATER SYSTEM SHALL BE TESTED PER A.D.E.Q. BULLETIN NO. 10 TO THE APPROPRIATE A.W.W.A. STANDARDS.

7.7 ALL FIRE HYDRANTS SHALL MEET ALL REQUIREMENTS OF A.W.W.A. C-509-80 AND TOWN OF JEROME REQUIREMENTS.

8 CONSTRUCTION STAKING

8.1 THE ACCURACY OF ALL CONSTRUCTION WORK SHALL BE MAINTAINED AND VERIFIED BY THE OWNER'S SURVEYOR AT THE OWNER'S EXPENSE BY PROVIDING CONSTRUCTION STAKING SUITABLE TO THE TOWN ENGINEER. STAKES WILL BE SET ESTABLISHING LINES AND GRADES (FINISH OR FLOWLINE) FOR ALL CONSTRUCTION INCLUDING ROADS, CURB AND GUTTER, SIDEWALKS, UTILITIES, STRUCTURES, AND OTHER WORK AS CONSIDERED NECESSARY BY THE ENGINEER. ALL SURVEY CONTROL SHALL BE SET BY THE OWNER'S SURVEYOR FROM MONUMENTS ACCEPTABLE TO THE ENGINEER.

9 GRADING AND EARTHWORK

9.1 PERFORM ALL EARTHWORK GRADING, CUTTING AND FILLING AS PER THE PROJECT SOILS REPORT* AND ALL ADDENDA. ALL WORK TO BE COORDINATED AS PER THE SWPPP.

9.2 NO GRADING OR TRENCHING WORK SHALL BEGIN PRIOR TO SUPPORTING AND PROTECTING EXISTING ONSITE AND ADJACENT PROPERTY FROM SETTLING, CRACKING, OR OTHER DAMAGE WHICH MIGHT RESULT. CONTRACTOR SHALL VERIFY FROM SOILS REPORT RECOMMENDATIONS THE DEGREE OF DIFFICULTY REQUIRED FOR TRENCHING AND EXCAVATION WORK BASED ON DEPTH AND TYPES OF MATERIALS TO BE ENCOUNTERED.

9.3 WATER SOURCE: THE CONTRACTOR SHALL MAKE THE NECESSARY ARRANGEMENTS FOR OBTAINING ALL WATER REQUIRED FOR SOIL COMPACTION, DRINKING PURPOSES AND DUST CONTROL. (MAG SPEC 225)

9.4 CLEARING AND GRUBBING: EXAMINE SITE AND PROVIDE NECESSARY EQUIPMENT AND LABOR TO REMOVE FROM THE SITE AND DISPOSE OF STUMPS, ROOTS, ROCKS, LOOSE FILL, VEGETATION, DEBRIS, AND ANY OTHER OBJECTIONABLE MATERIALS FROM THE BUILDING AND FILL AREAS. CLEAN, UNCLASSIFIED ONSITE SOILS MAY BE USED IN GENERAL AS FILL MATERIAL. SEE MAG SPECIFICATION SECTIONS 201 AND 215.

9.5 TOPSOIL THAT WILL BE AFFECTED BY ROUGH GRADING OR EXCAVATION SHALL BE STOCKPILED ON THE SITE SEPARATELY AND SHALL NOT BE USED FOR FILL, BUT SHALL BE CONSERVED AND USED FOR FINE AND FINISH GRADING.

9.6 SITE DRAINAGE: CONSTRUCTION OF ALL SWALES, CHANNELS, DRAINAGE PIPES, DRAINAGE STRUCTURES AND BANK PROTECTION SHALL BE CONSTRUCTED DURING THE FIRST PHASES OF SITE CONSTRUCTION TO PROTECT ALL OTHER CONSTRUCTION FROM SURFACE WATERS. DIVERT RUN OFF WATER AROUND CONSTRUCTION OPERATIONS. CARE SHALL BE TAKEN BY THE CONTRACTOR NOT TO ADVERSELY AFFECT ADJACENT PROPERTIES. DRAIN EXCAVATIONS BY PUMPING OR OTHER SATISFACTORY METHOD TO PREVENT SOFTENING OF THE FOUNDATION SOILS, UNDERCUTTING OF FOOTINGS, OR OTHER ACTIONS DETRIMENTAL TO PROPER CONSTRUCTION PROCEDURES. ALL WORK TO BE COORDINATED AS PER THE SWPPP.

9.7 THE CONTRACTOR SHALL PROVIDE POSITIVE DRAINAGE AWAY FROM ALL WALLS AND FOUNDATIONS. ALL STORM DRAINS, DRAIN LINES, OVERFLOWS, OUTLETS, AND/OR OTHER DRAINAGE TYPE OUTLETS WHICH CONDUCT MOISTURE NEAR THE STRUCTURES SHALL BE POSITIVELY DRAINED AWAY FORM THE STRUCTURE. NO WATER SHALL BE PERMITTED TO POND NEAR STRUCTURES OR FOUNDATIONS. ALL DRAINAGE SHALL BE CHANNELED AND TAKEN A MINIMUM OF 10 FEET AWAY FROM ALL STRUCTURES.

9.8 SUBGRADE PREPARATION: IF THE NATURAL SUBGRADE IS LESS THAN THE REQUIRED DENSITY, IT SHALL BE SCARIFIED AND COMPACTED TO A MINIMUM DEPTH OF TWELVE INCHES OR AS NOTED IN THE SOILS REPORT IMMEDIATELY PRIOR TO PLACING SUBSEQUENT FILL MATERIAL THEREON. THE CONTRACTOR IS RESPONSIBLE FOR MAINTENANCE AND REPAIR OF DAMAGE TO PREPARED SUBGRADE CAUSED BY CONTRACTORS OPERATIONS OR PUBLIC TRAFFIC UNTIL ACCEPTANCE OF PROJECT. NO MATERIALS SHALL BE PLACED UPON THE PREPARED SUBGRADE UNTIL IT MEETS THE SPECIFIED REQUIREMENTS. ROADWAY SUBGRADE COMPACTION INCLUDES SUBGRADE UNDER ALL PAVEMENT, CURB, SIDEWALKS, SHOULDERS AND FILL SLOPES. SUBGRADE TOLERANCES SHALL BE AS SPECIFIED IN MAG SECTION 301. OPEN LANDSCAPED AREAS SHALL BE GRADED TO +/- 0.20 FEET.

9.9 EARTH FILL: AREAS TO BE FILLED SHALL BE LEVELED TO PROVIDE A LEVEL BASE TO SUPPORT FILL MATERIALS. SUBGRADE AND SUBBASE AREAS REQUIRING FILL MATERIAL SHALL BE SCARIFIED MOISTENED AND COMPACTED PRIOR TO PLACING FILL. ALL FILL, SUBGRADE AND SUBBASE MATERIALS SHALL BE COMPACTED TO SPECIFIED DENSITIES AT OR NEAR OPTIMUM MOISTURE CONTENTS AS VERIFIED AND RECOMMENDED BY THE SOILS ENGINEER. PLACE FILL IN HORIZONTAL LIFTS NOT EXCEEDING EIGHT INCHES IN LOOSE THICKNESS BEFORE COMPACTION. SLOPED SURFACES SHALL BE PLOWED, STEPPED, AND BENCHED SO THAT THE FILL MATERIAL WILL BOND WITH THE EXISTING MATERIAL. BENCH AT THE TOE OF FILL SLOPES AND PERIODIC INTERVALS UP THE FILL SLOPES BENCHES.

9.10 IT IS THE RESPONSIBILITY OF THE CONTRACTOR TO CONTACT THE TESTING COMPANY FOR SCHEDULING OF COMPACTION TESTING. THE FREQUENCY OF DENSITY AND MOISTURE TESTS REQUIRED FOR ADEQUATE CONTROL SHALL BE THE RESPONSIBILITY OF THE SOILS ENGINEER WHO SHALL CERTIFY TO THE ENGINEER AND CONTRACTOR AT PROJECT END THAT THE ROADBED FILL IS COMPACTED AS OUTLINED HEREIN. COMPACTION SHALL BE ACHIEVED BY MECHANICAL MEANS. IN NO CASE SHALL STRUCTURE BACKFILLING BE FLOOD WATER SETTLED.

9.11 ALL SLOPE CONSTRUCTION AND ROADWAY EXCAVATION SHALL CONFORM TO THE REQUIREMENTS OF MAG SPECIFICATIONS SECTIONS 201, 205, 211, 301, AND UBC SECTIONS 7009 AND 8010. CUT AND FILL SLOPES SHALL BE AS INDICATED ON THE DETAILS AND PLANS. CUT AND FILL SLOPE GRADIENTS SHALL NOT EXCEED 2:1 IN STEEPNESS WITHOUT WRITTEN AUTHORIZATION FROM THE SOILS ENGINEER AND EXAMINATION BY THE DESIGN ENGINEER. ALL SLOPE CONDITIONS SHALL BE PROVIDED WITH THE APPROPRIATE BENCHES AS SPECIFIED IN THE REFERENCE DOCUMENTS AND INDICATED ON THE PLANS. IF SOILS CONDITIONS ARE ENCOUNTERED WHICH DO NOT ALLOW THE ESTABLISHMENT OF THE INDICATED CUT OR FILL SLOPES, THE DESIGN ENGINEER AND SOILS ENGINEER SHALL BE CONTACTED IMMEDIATELY TO DETERMINE AN ADJUSTMENT TO THE SLOPE GRADIENT OR TO ESTABLISH A METHOD OF STABILIZATION ALL FILL SLOPES SHALL BE COMPACTED AS EACH LIFT OF FILL MATERIAL IS PLACED. ALL CUT AND FILL SLOPES SHALL BE UNIFORMLY GRADED TO LINES AND GRADES INDICATED. TOPS OF ALL CUT SLOPES SHALL BE ROUNDED AND ALL UNSTABLE AND LOOSE MATERIAL AT TOP OF SLOPE SHALL BE REMOVED. TOP OF CUT SLOPES OVER 10' HIGH SHALL BE PROVIDED WITH BROW DITCHES FOR DRAINAGE. ALL CUT AND FILL SLOPES SHALL BE REVEGETATED WITH A MIXTURE OF NATIVE GRASSES AND WILD FLOWER SEED OR AS SPECIFIED WITHIN THE LANDSCAPE PLANS. COMPACT ALL SHOULDERS AND BACKFILLS BEHIND ALL STRUCTURE AND WALLS.

9.12 COMPACT TO THE FOLLOWING SPECIFIED PERCENT OF MAXIMUM DENSITY AS DETERMINED IN ACCORDANCE WITH ASTM D698 AND MAG SECTION 211 OR AS DIRECTED IN THE SOILS REPORT.

MINIMUM PERCENT COMPACTION
SUBGRADE SOIL:
ROADWAY AND STRUCTURE AREAS----------95
PAVED AREAS (PAVEMENTS, SIDEWALKS, & PADS)---------95
EARTH FILL:
ROADWAY AND STRUCTURE AREAS----------95
PAVED AREAS (PAVEMENTS, SIDEWALKS, & PADS)---------95
GRASSED AND PLANTING AREAS----------85
AGGREGATE BASE COURSE----------100
BACKFILL AROUND STRUCTURES----------95
BACKFILL FOR UTILITY TRENCHES (PER MAG SECTION 601). PROVIDE TYPE 1 BACKFILL OR AS DIRECTED BY APPROPRIATE UTILITY REQUIREMENTS. BACKFILL FOR TRENCHES WITHIN 10' OF STRUCTURES AND WALLS SHALL BE COMPACTED TO 95% UNLESS DIRECTED OTHERWISE BY ENGINEER.

9.13 EXCAVATION: EXCAVATE TO THE DIMENSIONS AND DEPTHS INDICATED ON THE DRAWINGS. FOUNDATIONS SHALL REST ON ENGINEERED COMPACTED FILL OR UNDISTURBED NATURAL SOILS AT GRADE ELEVATIONS INDICATED. IF SUITABLE SOIL IS NOT REACHED AT THE DEPTHS INDICATED, THE CONTRACTOR SHALL IMMEDIATELY NOTIFY THE SOILS ENGINEER AND ENGINEER. THE CONTRACTOR WILL BE DIRECTED, IN WRITING, TO EXCAVATE TO THE DEPTH OF SUITABLE SOIL. EXCAVATION FOR FOUNDATIONS WHICH ARE CARRIED BELOW THE DEPTHS INDICATED SHALL HAVE THE CONCRETE EXTENDED TO THE BOTTOM OF THE EXCAVATION AT THE CONTRACTOR'S EXPENSE. SEE MAG SPECIFICATION SECTION 206.

9.14 WATERING: CAREFULLY WATER EARTH FILL DURING PLACING BY MEANS OF A FINE SPRAY OR OTHER APPROVED METHOD, SO THAT EACH LAYER IS THOROUGHLY AND UNIFORMLY WETTED. MOISTURE CONTENT OF THE MATERIAL SHALL BE CAREFULLY CONTROLLED AT ALL TIMES AND CHECKED AT PROPER INTERVALS TO INSURE CORRECT MOISTURE FOR COMPACTION SPECIFIED. SEE MAG SECTION 225 AND SOILS REPORT.

10 PAVING

10.1 COMPLETE ASPHALTIC CONCRETE PAVEMENT INSTALLATION SHALL INCLUDE BUT NOT BE LIMITED TO THE FOLLOWING:
A. TACK COATING OF ALL SURFACES, UNDILUTED .02 TO .10 GAL/SY, DILUTED 1:1 MIXTURE, .05 TO .15 GAL/SY, OR AS DIRECTED.
B. SEAL COATING: SEAL COATING WITHIN THE RIGHT-OF-WAY SHALL BE A FOG SEAL COAT.
C. PAINT FOR PAVEMENT STRIPING AND MARKING SHALL CONFORM TO FEDERAL SPEC. NO. TTP-155E, "PAINT, TRAFFIC, HIGHWAY, WHITE AND YELLOW". COLORS FOR PAVEMENT MARKING AND STRIPING SHALL BE AS SPECIFIED BY THE TOWN ENGINEER.
D. TRAFFIC CONTROL DEVICES: SIGNS AND PAVEMENT MARKINGS SHALL CONFORM TO "MANUAL ON UNI

11 FIELD INSPECTION

11.1 THE CONTRACTOR SHALL CAREFULLY PRESERVE ALL STAKES, REFERENCE AND CONTROL POINTS, ETC. AGAINST DESTRUCTION AND SHALL PROMPTLY NOTIFY THE ENGINEER OF ANY STAKES WHICH HAVE BEEN DISTURBED.

11.2 OWNER'S REGISTERED SURVEYOR SHALL BE NOTIFIED TWO WORKING DAYS (48 HOURS) MINIMUM PRIOR TO FIELD STAKING SCHEDULING.

11.3 ANY QUESTIONS RAISED RELATIVE TO ACCURACY OF IMPROVEMENT INSTALLATION SHALL NOT BE RAISED SUBSEQUENT TO COMPLETION OF THE WORK UNLESS ALL SURVEY STAKES ARE MAINTAINED INTACT. SHOULD SUCH STAKES NOT BE PRESENT AND VERIFIED AS TO THEIR ORIGIN, NO CLAIM FOR ADDITIONAL COMPENSATION FOR CORRECTION SHALL BE PRESENTED TO ANY PARTY AND SUCH WORK SHALL BE CORRECTED BY THE CONTRACTOR AT HIS EXPENSE.

12 SUSPENSION OF WORK

12.1 THE ENGINEER OR HIS AUTHORIZED REPRESENTATIVE MAY SUSPEND THE WORK BY WRITTEN NOTICE WHEN, IN HIS JUDGMENT, PROGRESS IS UNSATISFACTORY, WORK BEING DONE IS UNAUTHORIZED OR DEFECTIVE, WEATHER CONDITIONS ARE UNSUITABLE, OR THERE IS DANGER TO THE PUBLIC HEALTH OR SAFETY.

13 WARRANTY

13.1 ANY DEFECTS WHICH APPEAR IN THE WORK WITHIN TWO YEARS FROM THE DATE OF ACCEPTANCE AND WHICH ARE DUE TO IMPROPER WORKMANSHIP OR INFERIOR MATERIALS SUPPLIED SHALL BE CORRECTED BY OR AT THE EXPENSE OF THE CONTRACTOR.

14 EROSION CONTROL NOTES

(SPECIFICATIONS FOR PERMANENT SEEDING)

14.1 SITE PREPARATION
- A. INSTALL NECESSARY SURFACE WATER CONTROL MEASURES PRIOR TO PLANTING PERMANENT SEEDING.
- B. GRADE TO PERMIT USE OF CONVENTIONAL EQUIPMENT FOR SEEDBED PREPARATION.
- C. PROVIDE ADEQUATE DRAINAGE WHERE INTERNAL WATER MOVEMENT, ESPECIALLY AT TOES OF SLOPES, MAY CAUSE SEEPS OR SLIPPAGE BEFORE SEEDING IS WELL ESTABLISHED.

14.2 SEEDBED PREPARATION A. AS PRACTICAL, PERFORM ALL CULTURAL OPERATIONS AT RIGHT ANGLES TO THE SLOPE. B. IMMEDIATELY BEFORE SEEDING, RAKE OR OTHERWISE LOOSEN PLANTING SURFACE TO PROVIDE A SMOOTH, FRIABLE SURFACE FREE OF EARTH CLODS, HUMPS AND DEPRESSIONS, AND DISPOSE OF LOOSE STONES HAVING A DIMENSION GREATER THAN ONE INCH AND DEBRIS BROUGHT TO THE SURFACE DURING CULTIVATION.

14.3 PLANTING A. APPLY SEED MIX AT THE RATE OF 11 POUNDS PER ACRE. SHALL CONTAIN THE FOLLOWING PROPORTION OF PURE LIVE SEED: SAND DROPSEED (SPOROBOLUS CRYPTANDRUS) 1 LB SIDEOATS GRAMA (BOUTELOUS CURTIPENDULA)5 LB CRESTED WHEATGRASS (AGROPYRON CRISTATUM) 5 LB B. APPLY SEED IN TWO DIRECTIONS AT RIGHT ANGLES TO EACH OTHER WITH HALF THE SPECIFIED APPLICATION RATE APPLIED IN EACH DIRECTION. C. IMMEDIATELY AFTER SEEDING, UNIFORMLY SPREAD SCREENED MANURE AT THE RATE OF ONE CUBIC YARD PER 1000 SQUARE FEET AND WATER UNTIL THE GROUND IS WET TO A MINIMUM DEPTH OF TWO INCHES. D. HYDRAULIC SEEDING USING 1500 POUNDS OF WOOD CELLULOSE FIBER PER ACRE MAY BE UTILIZED IN LIEU OF PLANTING.

14.4 MAINTENANCE A. PROTECT PLANTED AREAS FROM GRAZING, FIRE, TRAFFIC, AND WEED GROWTH. B. MAINTAIN PLANTED AREAS UNTIL A GOOD STAND OF GRASS IS ESTABLISHED. AREAS AS REQUIRED IF NO GROWTH IS PRESENT WITHIN 15 DAYS OF PLANTING.

15 TEMPORARY EROSION CONTROL

15.1 EROSION CONTROL BERMS AND ROCK CHECK DAMS
- A. PROVIDE EARTHEN BERMS AT TOES OF SLOPES REMAINING BARE BETWEEN CONSTRUCTION PHASES.
- B. PLACE TEMPORARY ROCK CHECK DAMS IN ROAD DITCHES AND CHANNELS IF RIP-RAP PROTECTION WILL NOT BE PROVIDED WITHIN 60 DAYS.

15.2 CONTRACTOR SHALL BE RESPONSIBLE FOR PROVIDING EROSION CONTROL MEASURES SUCH AS SAND BAGGING, TEMPORARY DE-SILTING BASIN CONSTRUCTION BERMS, VISQUEEN, ETC. TO PROTECT ADJOINING PROPERTIES FROM EROSION.

16 GENERAL CONSTRUCTION NOTES

16.1 ALL CORRUGATED METAL PIPE TO BE 14 GAUGE, UNLESS OTHERWISE APPROVED BY THE DESIGN ENGINEER.

16.2 ALL CORRIGATED METAL PIPE SHALL HAVE FLARED END SECTIONS, EXCEPT WHERE HEADWALLS ARE USED.

16.3 ALL DRAINAGE CULVERTS AND PIPES SHALL HAVE A MINIMUM COVER OF 24" OR AS SPECIFIED.

16.4 ADDITIONAL CARE SHALL BE TAKEN TO PROTECT ALL CMP DURING CONSTRUCTION.

16.5 RETAINING WALLS SHALL BEAR ONTO NATURAL BEDROCK, OR COMPACTED SOIL WHICH HAS A BEARING VALUE OF 3,000 P.S.F. VERIFICATION OF SAID BEARING VALUE TO BE PROVIDED BY THE SOILS ENGINEER.

16.6 RIPRAP MATERIAL SHALL BE AS SPECIFIED TO A DEPTH OF TWICE THE SIZE OF Dso UNDER LAYING A FILLER LAYER OF Dso =3/4" TO A DEPTH OF 10" OR GEOTEXTILES. THE GRADATION OF RIPRAP SHOULD FOLLOW A SMOOTH CURVE. THE RATIO TO THE LARGEST SIZE ROCK TO Dso SHOULD BE EQUAL TO OR LESS THAN 2 (Dso/Dso ~0.5). THE RIPRAP SHOULD BE HARD, DENSE, DURABLE AND RESISTANT TO WEATHER AND FRACTURE. ALL RIPRAP TO BE HAND PLACED IN AN INTERLOCKING POSITION. FILLER MATERIAL TO BE WELL GRADED GRAVEL AS SPECIFIED. MATERIAL FURNISHED FOR RIPRAP SHALL CONFORM TO MAG SPEC 220.2.

16.7 ALL CONCRETE AND REBAR PLACEMENT PER MAG SPEC 505.

16.8 CONCRETE TESTING PER MAG SPEC 725.

16.9 ALL CONCRETE TO BE CLASS B (2500PSI) IF NOT SPECIFIED.

16.10 MINIMUM COVER ON ALL REBAR TO BE MIN 1" UNLESS OTHERWISE SPECIFIED.

16.11 MINIMUM LAP AT REBAR SPLICES TO BE 1' UNLESS OTHERWISE SPECIFIED.

16.12 ALL MANHOLE FRAMES TO HAVE 12" ANCHORS SPACED A MINIMUM OF 12" RADIALLY AROUND FRAME.

16.13 CONCRETE FOR FOOTINGS AND PADS AHALL BE CLASS A (3000 PSI)

SURVEY

1. TOPOGRAPHIC SURVEY BY KENNEY AERIAL MAPPING, INC., PHOENIX, AZ, DATED NOVEMBER 2022 AND SUPPLEMENTED IN FEBRUARY 2023. ADDITIONAL TOPOGRAPHIC SURVEY DATA PERFORMED BY SEC, INC. COORDINATES ARE RELATIVE TO NAD 83, AZ STATE PLANE CENTRAL ZONE, INTERNATIONAL FEET. ELEVATIONS RELATIVE TO NAVD 83. SURVEY CONTROL ON SHEET C2.0.

TREE NOTES

1. ALL EXISTING TREES AND SHRUBS NOT AFFECTED BY BUILDING CONSTRUCTION OR ROAD DEVELOPMENT MUST BE FENCED WITH A CONSTRUCTION ENVELOPE FENCE TO PROTECT THEM DURING CONSTRUCTION

2. NO TREES TO BE PLACED OVER/ON SEWER LINE

ADEQ WATER AND SEWER SYSTEM NOTES

MANHOLES

ALL MANHOLES SHALL BE 4-FT. ID PRECAST CONCRETE WITH POURED-IN-PLACE CONCRETE BASE AND TRAFFIC BEARING RING AND COVER. ALL COVERS SHALL BE 2-FT. IN DIAMETER AND SHALL BE MARKED "SEWER". TEST MANHOLES FOR WATER TIGHTNESS (INFILTRATION) PER R 18-9-E301.4.01.D.3.F. WATER TIGHTNESS SHALL BE TESTED BY EITHER 1) FILLING THE MANHOLE WITH WATER AND ENSURING THAT THE DROP IN WATER LEVEL DOES NOT EXCEED 0.0034 OF THE TOTAL MANHOLE VOLUME PER HOUR, OR 2) AIR PRESSURE TESTING USING THE "STANDARD TEST METHOD FOR CONCRETE SEWER MANHOLES BY NEGATIVE AIR PRESSURE (VACUUM) TEST", ASTM C1244-02a1 (2002). TEST 100% OF ALL MANHOLES. MANHOLES SHALL CONFORM TO A.D.E.Q. AND M.A.G. SPECIFICATIONS. CONSTRUCTION SHALL CONFORM TO M.A.G. STD. DTLS. 420-1 AND 420-2.'

CONCRETE

CLASS A CONCRETE SHALL HAVE A MINIMUM 28 DAY COMPRESSIVE STRENGTH OF 2000 PSI.

PIPE

GRAVITY SEWER PIPE SHALL BE PVC, SDR-26 AND CONFORM TO ASTM D-1784 AND ASTM D-3034. SEALS SHALL CONFORM TO ASTM F-477. PIPE SHALL BE JOINED BY BELL AND SPIGOT TYPE JOINTS. FITTINGS SHALL CONFORM TO ASTM D-3212. GRAVITY SEWER PIPE SHALL BE TESTED FOR DEFLECTION AND LEAKAGE. SHORT TERM DEFLECTION TESTING SHALL BE PERFORMED AFTER COMPLETE BACKFILL BUT PRIOR TO INSTALLATION OF FINISH SURFACE MATERIAL. A SHORT TERM DEFLECTION IN EXCESS OF 5% SHALL BE CONSIDERED UNACCEPTABLE AND PIPE SHALL BE REPAIRED, OR REPLACED AND RETESTED. A MINIMUM OF 100% OF GRAVITY SEWER SHALL BE DEFLECTION TESTED. SEWER PIPE SHALL BE TESTED FOR LEAKAGE USING LOW PRESSURE AIR TESTING PER "STANDARD TEST METHOD FOR INSTALLATION ACCEPTANCE OF PLASTIC GRAVITY SEWER LINES USING LOW PRESSURE AIR", ASTM F 1417-92, REAPPROVED 1998. TEST 100% OF ALL SEWER LINES. TEST THE TOTAL LENGTH OF THE SEWER LINE FOR UNIFORM SLOPE BY LAMP LIGHTING, REMOTE CAMERA OR SIMILAR METHOD APPROVED BY ADEQ AND RECORD THE RESULTS.

DUCTILE IRON PIPE SHALL BE AWWA C-150, CLASS 350 AND SHALL BE TESTED FOR LEAKAGE PER AWWA STANDARD C-600.

A MINIMUM HORIZONTAL DISTANCE OF 6-FT SHALL BE MAINTAINED BETWEEN MAINS AND GRAVITY SEWERS.

MATERIAL

ALL MATERIALS & PRODUCTS THAT COME INTO CONTACT WITH DRINKING WATER OR DRINKING WATER TREATMENT CHEMICALS MUST COMPLY WITH AWWA STANDARDS & NSF STANDARD 61. ANY "OR EQUAL' SUBSTITUTION SHALL ALSO MEET NSF STANDARD 61.

ALL MATERIALS USED IN THE INSTALLATION OF WATER MAINS SHALL BE PURSUANT TO AAC R-18-4-119, & SHALL BE NSF APPROVED FOR POTABLE WATER.

DISINFECTION

WATER MAINS. SHALL BE DISINFECTED IN ACCORDANCE WITH ADEQ ENGINEERING BULLETIN NO.8 "DISINFECTION OF WATER SYSTEMS".

TESTING

ONE HUNDRED PERCENT (100%) OF PIPE LINES SHALL BE PRESSURE AND LEAK TESTED IN ACCORDANCE WITH AWWA C-600, SECTION 4 AND MAG SECTION 611. MINIMUM TEST PRESSURES SHALL BE 200 PSI PLUS ALLOWANCE FOR WATER HAMMER.

AFTER PRESSURE AND LEAK TESTING IS SHOWN TO BE SATISFACTORY, WATER LINES SHALL BE DISINFECTED BY CHLORINATION IN ACCORDANCE WITH AWWA C-601, MAG SECTION 610.15, AND ADEQ BULLETIN 8. ALL VALVES SHALL BE WORKED INTERMITTENTLY FOR A PERIOD OF 24 HOURS FOLLOWING CHLORINATION.

WATER SYSTEM THRUST BLOCKING AND/OR JOINT RESTRAINT

PIPE LINES SHALL BE PROVIDED WITH CONCRETE THRUST BLOCKS AT ALL CHANGES IN DIRECTION AND SIZE AND AT ALL TEES, VALVES, PLUGS, AND DEAD ENDS, PER MAG STANDARD DETAILS 301 AND 380 AND YAG STANDARD DETAIL 3-03. PIPE LINES MAY ALSO BE PROVIDED WITH RESTRAINED JOINTS AT ALL CHANGES IN DIRECTION AND SIZE AND AT ALL TEES, VALVES, PLUGS, AND DEAD ENDS, PER MAG STANDARD DETAILS 302 AND 303.

ADEQ WATER & SEWER NOTES (CONT.)

TRENCHING AND BACKFILLING

ROUGH GRADING SHALL BE COMPLETED PRIOR TO INSTALLATION OF UNDERGROUND UTILITIES.

TRENCH BOTTOM SHALL BE COMPACTED BY SUITABLE MEANS APPROVED BY THE ENGINEER PRIOR TO PLACEMENT OF BEDDING MATERIAL. BEDDING MATERIAL SHALL BE PLACED TO PROVIDE UNIFORM AND ADEQUATE LONGITUDINAL SUPPORT UNDER THE PIPE. THE CONTRACTOR SHALL ENSURE THAT A MINIMUM COMPACTED DEPTH OF 6" IS MAINTAINED UNDERNEATH THE PIPE. BELL HOLES SHOULD BE PROVIDED AT EACH JOINT TO PERMIT PROPER ASSEMBLY WHILE MAINTAINING UNIFORM SUPPORT.

BEDDING MATERIAL SHALL BE ROUNDED GRAVEL WITH A MAXIMUM PARTICLE SIZE OF 1 1/2" AND SHALL BE NON-PLASTIC. WHERE DEPTH OF COVER IS 2-FT. OR LESS, BACKFILL MATERIAL SHALL BE ROUNDED GRAVEL WITH A MAXIMUM PARTICLE SIZE OF 4" AND WITH NO MORE THAN 20% PASSING THE #200 SIEVE.

BACKFILL SHALL BE PLACED IN LAYERS OF NOT MORE THAN 8" LOOSE DEPTH AND COMPACTED TO ACHIEVE COMPACTION OF 95% OF THE MAXIMUM DENSITY AS DETERMINED BY AASHTO T-99 AND T-191 OR ASTM D-2922 AND D-3017. THE CONTRACTOR SHALL CONTRACT WITH AN INDEPENDENT TESTING LABORATORY TO PROVIDED COMPACTION TESTING. TESTS SHALL BE PROVIDED AT MINIMUM INTERVALS OF ONE TEST PER 50 CUBIC YARDS OF TRENCH BACKFILL. TEST RESULTS SHALL BE SUBMITTED DAILY TO THE ENGINEER.

TRENCHING, PIPELAYING, BACKFILLING, AND ALL OTHER CONSTRUCTION SHALL BE PERFORMED UNDER THE INSPECTION, COORDINATION, AND SUPERVISION OF A REGISTERED PROFESSIONAL CIVIL ENGINEER.

NO TRENCH SHALL BE FILLED WITH BEDDING MATERIAL OR BACKFILL UNTIL THE EXCAVATION AND PIPE LAYING, RESPECTIVELY, HAVE BEEN APPROVED BY THE OWNER OR HIS AUTHORIZED REPRESENTATIVE.

THE EXCAVATION METHOD EMPLOYED SHALL BE THE CONTRACTOR'S OPTION. MATERIAL SHALL NOT BE STOCKPILED TO A DEPTH OF MORE THAN 5 FEET ABOVE FINISHED GRADE WITHIN 25 FEET OF ANY EXCAVATION OR STRUCTURE. EXCAVATION SHALL EXTEND SUFFICIENT DISTANCE FROM WALLS AND FOOTINGS TO ALLOW PLACING AND REMOVAL OF FORMS, INSTALLATION OF SERVICES AND INSPECTION BY THE ENGINEER. WITHIN 12" OF FINISHED GRADE SHOWN ON THE DRAWINGS, AND FOR THE MANHOLES, FILL AND BACKFILL SHALL BE NATIVE MATERIAL, FEE FROM BROKEN CONCRETE, ORGANIC MATERIAL, OR OTHER DEBRIS WITH SUFFICIENT FINES TO FILL ALL VOIDS AND TO INSURE A UNIFORMLY COMPACTED MASS OF THE REQUIRED DENSITY AND HAVING A MAXIMUM SIZE OF 2 - ½ INCHES WITH 0 TO 20% MINUS #200. ALL FILL AND BACKFILL SHALL BE PLACED IN LAYERS OF NOT MORE THAN 8" LOOSE AND COMPACTED TO 95% OF MAXIMUM DENSITY, DETERMINED BY AASHTO TEST METHOD T-99, PRIOR TO PLACEMENT OF THE NEXT LAYER.

WATER AND SEWER SYSTEM DESIGN: MINIMUM DESIGN CRITERIA

WATER AND SEWER MAINS SHALL BE SEPARATED IN ORDER TO PROTECT PUBLIC WATER SYSTEMS FROM POSSIBLE CONTAMINATION. ALL DISTANCES ARE MEASURED PERPENDICULARLY FROM THE OUTSIDE OF THE SEWER MAIN TO THE OUTSIDE OF THE WATER MAIN. SEPARATION REQUIREMENTS ARE AS FOLLOWS:
1. A WATER MAIN SHALL NOT BE PLACED:
A. WITHIN SIX FEET, HORIZONTAL DISTANCE, AND BELOW TWO FEET, VERTICAL DISTANCE, ABOVE THE TOP OF A SEWER MAIN UNLESS EXTRA PROTECTION IS PROVIDED. EXTRA PROTECTION SHALL CONSIST OF CONSTRUCTING THE SEWER MAIN WITH MECHANICAL JOINT DUCTILE IRON PIPE OR WITH SLIP-JOINT DUCTILE IRON PIPE IF JOINT RESTRAINT IS PROVIDED. ALTERNATE EXTRA PROTECTION SHALL CONSIST OF ENCASING BOTH THE WATER AND SEWER MAINS IN AT LEAST SIX INCHES OF CONCRETE FOR AT LEAST TEN FEET BEYOND THE AREA COVERED BY THIS SUBPARAGRAPH.
B. WITHIN TWO FEET HORIZONTALLY AND TWO FEET BELOW THE SEWER MAIN.
2. NO WATER PIPE SHALL PASS THROUGH OR COME INTO CONTACT WITH ANY PART OF A SEWER MANHOLE. THE MINIMUM HORIZONTAL SEPARATION BETWEEN WATER MAINS AND MANHOLES SHALL BE SIX FEET, MEASURED FROM THE CENTER OF THE MANHOLE.
3. THE MINIMUM SEPARATION BETWEEN FORCE MAINS OR PRESSURE SEWERS AND WATER MAINS SHALL BE TWO FEET VERTICALLY AND SIX FEET HORIZONTALLY UNDER ALL CONDITIONS. WHERE A SEWER FORCE MAIN CROSSES ABOVE OR LESS THAN SIX FEET BELOW A WATER LINE, THE SEWER MAIN SHALL BE ENCASED IN AT LEAST SIX INCHES OF CONCRETE OR CONSTRUCTED USING MECHANICAL JOINT DUCTILE IRON PIPE FOR TEN FEET ON EITHER SIDE OF THE WATER MAIN.

TOPO FEATURES

- EXISTING SANITARY SEWER w/SIZE
- GUARDRAIL
- WASH
- RETAINING WALL
- DIRT ROAD
- PROPERTY LINE
- OVERHEAD POWER LINE w/POLE
- FENCE LINE
- UNKNOWN EXPOSED PIPE
- CULVERT
- MANHOLE
- AERIAL SURVEY PANEL PT
- SIGN
- POST
- GATE
- TREE OR BUSH

LEGEND
PROPOSED DEVELOPMENT

- CENTER LINE/BASE LINE
- RIP RAP
- FENCE
- GUARD RAIL
- SAFETY RAIL
- CULVERT
- DRAINAGE FLOWLINE
- RETAINING WALL
- SIGNS
- DRAINAGE FLOW DIRECTION

LEGEND
PROPOSED SANITARY SEWER

- PRESSURE SEWER MAIN
- GRAVITY SEWER MAIN
- SEWER MANHOLE
- SEWER CLEANOUT

LEGEND
PROPOSED WATER

- WATER MAIN
- WATER METER
- AIR RELEASE VALVE
- BLOW OFF VALVE
- GATE VALVE
- FIRE HYDRANT w/VALVE
- BACKFLOW PREVENTOR VALVE
- WELL
- IRRIGATION CONTROL VALVE
- PIPE END CAP

LEGEND
PROPOSED ELECTRIC/GAS/TV/TEL

- OVERHEAD POWER
- UNDERGROUND POWER
- GAS
- TELEPHONE
- COMMON UTILITIES (TV,TEL)
- TELEVISION
- UTILITY POLE
- TELEPHONE RISER
- CABLE T.V. RISER
- GAS METER
- ELECTRIC METER
- ELECTRIC TRANSFORMER
- GUY WIRE

ABBREVIATIONS

LF	LINEAR FEET
ADOT	ARIZONA DEPT. OF TRANSPORATION
ADEQ	ARIZONA DEPT. OF ENVIRONMENTAL QUALITY
MAG	MARICOPA ASSOCIATION OF GOVERNMENTS
MSD	MARICOPA ASSOCIATION OF GOVERNMENTS STANDARD DETAIL
MUTCD	MANUAL OF UNIFORM TRAFFIC CONTROL DEVICES
FF	FINISHED FLOOR ELEVATION
EG	EXISTING GRADE
FG	FINISHED GRADE
TW	FINISHED GRADE AT TOP BACK OF WALL
BW	FINISHED GRADE AT BOTTOM FACE OF WALL
INV	INVERT
FL	FLOW LINE
AB	AGGREGATE BASE COURSE
DG	DECOMPOSED GRANITE
ADA	AMERICANS WITH DISABILITIES ACT
ARV	AIR RELEASE VALVE
BOV	BLOW-OFF VALVE
PVI	POINT OF VERTICAL INTERSECTION
DIP	DUCTILE IRON PIPE
PVC	POLYVINYL CHLORIDE
FPVC	FUSIBLE POLYVINYL CHLORIDE
CMP	CORRUGATED METAL PIPE
HDPE	HIGH DENSITY POLYETHYLENE
EP OR EOP	EDGE OF PAVEMENT
SEC	SOUTHWESTERN ENVIRONMENTAL CONSULTANTS, INC
STA	STATION
TBD	TO BE DETERMINED
VC	VERTICAL CURVE
WWTP	WASTE WATER TREATMENT PLANT
NTS	NOT TO SCALE
SF	SQUARE FEET
EL OR ELEV	ELEVATION
GRD BRK	GRADE BREAK
CP	SURVEY CONTROL POINT
SW	SIDEWALK
CY	CUBIC YARDS

NO	BY	DATE	REVISIONS	DATE	APP.

Professional Engineer — CERTIFICATE NO. 49106 — KRISHAN GEVINDA GINIGE — 10/31/25 — REGISTERED — ARIZONA, U.S.A.

PREPARED BY:
DESIGNED BY:
DRAWN BY: MMW
CHECKED BY: KG
SCALE: AS SHOWN
DATE 10/31/25
JOB NO. 19-1101CE

TITLE: NOTES 2, LEGENDS, ABBREVIATIONS

JOB: JEROME WWTP — GRADING & UTILITIES PLANS — YAVAPAI COUNTY AZ

PREPARED BY:
SOUTHWESTERN ENVIRONMENTAL CONSULTANTS, INC
825 COVE PARKWAY
COTTONWOOD, AZ 86326
928-282-7787

SHEET
C1.1
8 OF 99 SHEETS

JOB NO. 19-1101CE

© 2025, SEC, Inc., All Rights Reserved. This document is protected under the United States Copyright Act. No part may be reproduced in any form or by any means or stored in a database or retrieval system, without the prior written permission of SEC, Inc. These plans/documents have been prepared using technical knowledge that would be applied by other qualified consultants who practice this same profession in the same area and at the same time. Efforts have been made to be as accurate as possible. However, plans/documents could contain unintentional technical inaccuracies, typographical errors or omissions. Users of these plans/documents should understand that it is highly probable that errors and omissions will occur in any plan/document preparation process.

S:\LAND PROJECTS 2004 ENGINEERING\19-1101CE JEROME WWTP\DWG\C3D\PLANS\NOTES_LEGENDS_DETAILS.DWG

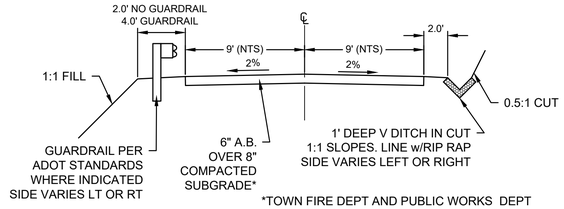

*TOWN FIRE DEPT AND PUBLIC WORKS DEPT
HAVE APPROVED USING AB ROAD SURFACE

1 TYPICAL WWTP ACCESS ROAD
1"=6'

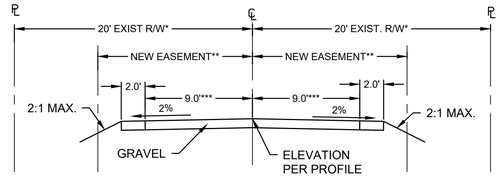

*NORTH DRIVE HAS 40' EXISTING RIGHT OF WAY
**NEW EASEMENT REQ'D. AT PRIVATE PROPERTY. WIDTH VARIES PER PLAN
***LANE WIDTH VARIES PER PLAN

2 TYPICAL NORTH DRIVE AND CEMETERY ACCESS RD
1"=6'

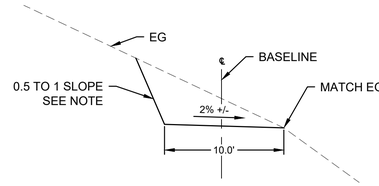

NOTE: 0.5 TO 1 SLOPE UPON APPROVAL BY
GEOTECHNICAL ENGINEER

3 TYPICAL SEWER ACCESS ROAD SECTION
1"=6'

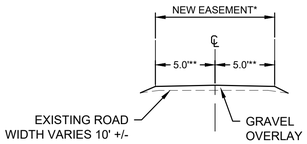

*NEW EASEMENT REQ'D. AT PRIVATE PROPERTY.
**PROVIDE MIN. 10' WIDE GRAVEL OVERLAY

4 TYPICAL CEMETERY RD THROUGH HISTORIC SITE
1"=6'

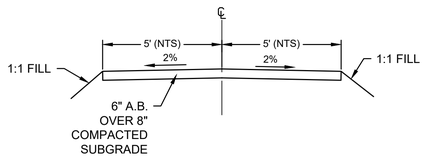

5 TYPICAL LOWER SITE ACCESS ROAD
1"=6'

NO	BY	DATE	REVISIONS	DATE	APP.

PREPARED BY:
DESIGNED BY:
DRAWN BY: NMW
CHECKED BY: KG
DATE 10/31/25
SCALE AS SHOWN
JOB NO. 19-1101CE

TITLE
TYPICAL SECTIONS

JOB
JEROME WWTP
GRADING & UTILITIES PLANS
YAVAPAI COUNTY AZ

PREPARED BY:
SEC Inc.
SOUTHWESTERN ENVIRONMENTAL CONSULTANTS, INC
825 COVE PARKWAY
COTTONWOOD, AZ 86326
928-282-7787

SHEET
C1.2
9 OF 99 SHEETS

JOB NO. 19-1101CE

© 2025, SEC, Inc., All Rights Reserved. This document is protected under the United States Copyright Act. No part may be reproduced in any form or by any means or stored in a database or retrieval system, without the prior written permission of SEC, Inc. possible. However, plans/documents could contain unintentional technical inaccuracies, typographical errors or omissions. Users of these plans/documents should understand that it is highly probable that errors and omissions will occur in any plan/document preparation process.

S:\land projects 2004 Engineering\19-1101CE Jerome WWTP\DWG\C3D\Plans\XBGRAD-19-1101CE.dwgS:\LAND PROJECTS 2004 ENGINEERING\19-1101CE JEROME WWTP\DWG\C3D\PLANS\XBGRAD-19-1101CE.DWG

100 YR FLOODWAY

500 YR FLOOD PLAIN

EXIST. PONDS

SHEET C2.1

NEW SEWER SEE SHEET C3.0

EXISTING BAR SCREEN

EXISTING TANKS

NEW WTTP

SHEET C2.6

EXISTING 12" SEWER FROM TOWN. SEE SHEET C3.0

MH-1

MH 2

12"SA

SA

P/L

X

BID ALTERNATE SEWER SEE SHEET C4.0

NEW SEWER CONSTRUCTION AND MAINTENANCE RD SEE SHEET C2.7

ROCK FALL PROTECTION BARRIER SEE SHEET C2.7

SHEET C2.5

SHEET C2.3

OPTIONAL WASTE EXCAVATION SITE 58,100 SF +/-

OPTIONAL TEMP. DUMP ROAD

EXISTING FENCE=END OF HISTORIC SITE

INSTALL NEW GATE AT EXISTING FENCE BEGIN IMPROVED ACCESS ROAD

APN 401-03-001L TOWN OF JEROME

CEMETARY

APN 401-03-043C JEROME VERDE DEVELOPMENT CO.

EXISTING ACCESS RD

½" REBAR LOT PIN MARKED RLS 26925
N: 1365826.06, E: 643587.50
ELEV=4801.17

4 C1.2

1 C1.2

IMPROVED ACCESS RD FOLLOWS EXISTING ROAD

PROPERTY BOUNDARY

NEW ACCESS EASEMENT REQ'D APN 401-03-043C

APPROX. CITY BOUNDARY

SHEET C2.4

PROJECT BENCH MARK
SET ½" REBAR
N: 1365466.36, E: 643466.42
ELEV 4827.11

RESTORE EXISTING CEMETERY ROAD TO MIN. 10' WIDE THROUGH HISTORIC SITE. SEE DETAIL 4, SHEET C1.2. SEE NOTE 3 THIS SHEET.

END NORTH DRIVE IMPROVEMENTS

APN 401-03-001C STUART

APN 401-11-001B DOSS

APN 401-11-001GU PATHWAY REAL ESTATE

APN 401-03-001N TOWN OF JEROME

EXISTING GRAVEL PARKING AREA

½" REBAR LOT PIN MARKED RLS 26925
N: 1365527.64, E: 643545.12
ELEV 4815.50

EXISTING CEMETARY GATE=BEGINNING OF HISTORIC SITE. SEE NOTE 3 THIS SHEET.

IMPROVED NORTH DRIVE. SEE DETAIL 2 SHEET C1.2

NEW ACCESS EASEMENT REQ'D 401-03-001P

NEW ACCESS EASEMENT REQ'D 401-11-007C

NEW ACCESS EASEMENT REQ'D 401-11-031A

EXISTING OVERHEAD POWER LINE AND 8' EASEMENT

JEROME APN 401-03-001P JEROME VERDE DEVELOPMENT CO.

APN 401-11-005A PATHWAY REALTY

APN 401-11-005B CANTO

APN 401-11-006 PETERSON

APN 401-11-007C LEACHMAN

HAMPSHIRE AVENUE / 89A

NORTH DRIVE

2 C1.2

APN 401-11-008 McWHIRTER & HUERTA

APN 401-11-031A CROSBY

SHEET C2.2

IMPROVE NORTH DRIVE INTERSECTION AT HWY 89A

EXISTING BLDG HAS BEEN REMOVED A NEW BLDG IS PENDING

NOTES

1. ACCESS ROAD IS DESIGNED TO ACCOMODATE AN AASHTO SU-30 TRUCK (APPROXIMATELY 30' LONG SINGLE UNIT TRUCK)
2. 2' CONTOURS SHOWN
3. THE CEMETARY IS A HISTORIC SITE. ANY WORK OR IMPROVEMENTS WITHIN THE HISTORIC SITE SHALL COMPLY WITH THE GOVERNING RESTRICTIONS. THE CONTRACTOR SHALL CONSULT WITH THE TOWN TO DETERMINE THE RESTRICTIONS.
4. NEW ACCESS EASEMENTS ARE NEEDED FOR ACCESS TO THE TREATMENT PLANT THROUGH THE PRIVATE PROPERTIES SHOWN. EASEMENTS ARE SHOWN FOR REFERENCE ONLY. FINAL DETAILS TO BE COORDINATED BY THE TOWN.

EARTHWORK ESTIMATE (CUBIC YARDS)*			
AREA	CUT	FILL	NET
NORTH DRIVE IMPROVEMENTS	101	94	7 CUT
WWTP ACCESS ROAD	4746	984	3762 CUT
WWTP PAD	993	897	96 CUT
LOWER WWTP SITE ACCESS RD	0	299	299 FILL
SEWER ACCESS RD	527	29	498 CUT
BROW DITCH	141	0	141 CUT
		TOTAL	4,266 CUT
*NO SHRINKAGE OR EXPANSION FACTORS APPLIED. EARTHWORK IS TO FINISHED GRADE. DEPTH TO SUBGRADE NOT ACCOUNTED FOR			

NORTH

0 20' 40' 80'

SCALE: 1"=40' @ 24"x36"

NO	BY	DATE	REVISIONS	DATE	APP.

Professional Engineer
CERTIFICATE NO.
49100
KRISHAN GEVINDA GINIGE
10/31/25
DATE SIGNED
ARIZONA, U.S.A.

PREPARED BY:
DESIGNED BY:
DRAWN BY: NMW
CHECKED BY: KG
SCALE: AS SHOWN
DATE: 10/31/25
JOB NO. 19-1101CE

TITLE
GRADING SITE MAP, SURVEY CONTROL

JOB
JEROME WWTP
GRADING & UTILITIES PLANS
YAVAPAI COUNTY AZ

PREPARED BY:
SEC Inc.
SOUTHWESTERN ENVIRONMENTAL CONSULTANTS, INC
825 COVE PARKWAY
COTTONWOOD, AZ 86326
928-282-7787

SHEET
C2.0
10 OF 99 SHEETS

JOB NO. 19-1101CE

© 2025, SEC, Inc., All Rights Reserved. This document is protected under the United States Copyright Act. No part may be reproduced in any form or by any means or stored in a database or retrieval system, without the prior written permission of SEC, Inc. These plans/documents have been prepared using technical knowledge that would be applied by other qualified registrants who practice the same profession in the same area and at the same time. Efforts have been made to be as accurate as possible. However, plans/documents could contain unintentional technical inaccuracies, typographical errors or omissions. Users of these plans/documents should understand that it is highly probable that errors and omissions will occur in any plan/document preparation process.

S:\land projects 2004 Engineering\19-1101CE Jerome WWTP\DWG\C3D\Plans\XBGRAD-19-1101CE.dwgS:\LAND PROJECTS 2004 ENGINEERING\19-1101CE JEROME WWTP\DWG\C3D\PLANS\XBGRAD-19-1101CE.DWG

CALLOUTS-WWTP	
1	NEW WASTEWATER TREATMENT PLANT
2	BLOWER / OPERATOR BLDG PER WWTP PLANS
3	CONCRETE DUMPSTER PAD & RAMP FOR DEWATERING PER STRUCTURAL PLANS.
4	CHLORINE CONTACT PER WWTP PLANS
5	EMERGENCY BACKUP GENERATOR PER WWTP PLANS
6	CATCH BASIN & DRAIN PIPE. SEE SHEET C2.6
7	PROVIDE STAIRS & HANDRAILS TO DUMPSTER PAD PER WWTP PLANS
8	TREATEMENT PLANT PAD. 6" AB OVER 8" COMPACTED SUBGRADE.
9	NOT USED.
10	BID ALTERNATE SEWER. SEE SHEET C4.0
11	PIPING PER WWTP PLANS
12	EXISTING 12" SEWER FROM TOWN. SEE SHEET C3.0
13	NEW 12" SEWER FROM TOWN. SEE SHEET C3.0
14	PROVIDE 5' WIDE PATH FOR SCREENINGS REMOVAL HAND CART
15	PLANT SCREENINGS REMOVAL PER WWTP PLANS
16	RETAINING WALL. FG ELEVATIONS PER PLAN. DETAILS PER STRUCTURAL PLANS. PROVIDE SAFETY RAILS FOR PEDESTRIAN FALL PROTECTION. SEE NOTE 4.
17	GRADE DEWATERING PAD TO DRAIN TO WALL OPENING OR SCUPPER. DETAILS TO BE COORDINATED BY STRUCTURAL ENGINEER.
18	BID ALTERNATE: INSTALL BOULDER CATCH FENCE. SEE SHEET C2.7.
19	1.5' DEEP BROW DITCH
20	EXISTING PVC WATER LINE. TO BE REMOVED OR RELOCATED PER TREATMENT PLANT PLANS. SEE NOTE 3.

NOTES
1. RETAINING WALL FINISHED GRADE ELEVATIONS SHOWN. TOP OF WALL AND FOOTING ELEVATIONS PER STRUCTURAL DETAILS. BY OTHERS.
2. 2' CONTOURS SHOWN
3. REFER TO TREATMENT PLANT PLANS, NOTES AND SPECIFICATIONS FOR ADDITIONAL CONSTRUCTION REQUIREMENTS AND DETAILS. BY OTHERS.
4. ALL RETAINING WALLS SHALL HAVE SAFETY RAILS PER MSD 145 OR OTHER SIMILAR MEANS FOR PEDESTRIAN FALL PROTECTION. TO BE COORDINATED BY STRUCTURAL ENGINEER.
5. ALL DITCHES, PONDS, DRAINAGE FLOW PATHS SHALL BE LINED WITH RIP RAP TO A HEIGHT OF MIN DEPTH. RIP RAP NOT SHOWN FOR CLARITY.
6. ALL RIP RAP D50=6" x 12" DEEP w/GEOTEXTILE FABRIC UNDERLAY UNLESS OTHERWISE SPECIFIED.
7. ALL SLOPES STEEPER THAN 2:1 SHALL HAVE EROSION PROTECTION PER GEOTECHNICAL ENGINEER RECOMMENDATIONS.

ESTIMATE OF EARTHWORK QTY'S SHOWN ON SEE SHEET C2.0

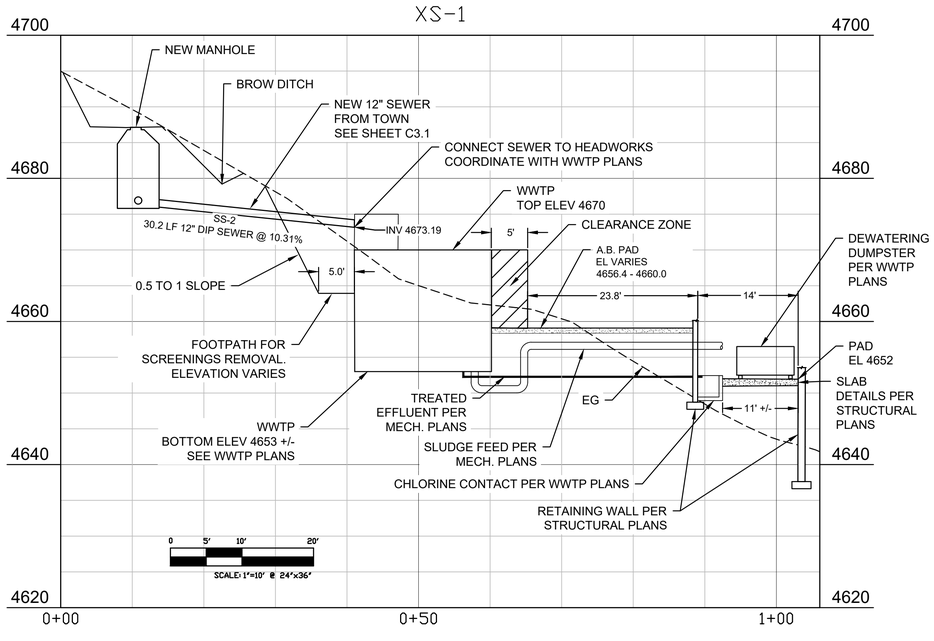

NO	BY	DATE	REVISIONS	DATE	APP.

Professional Engineer
CERTIFICATE NO.
49106
KRISHAN GEVINDA GINIGE
10/31/25
DATE SIGNED
ARIZONA, U.S.A.

PREPARED BY:
DESIGNED BY:
DRAWN BY: NMW
CHECKED BY: KG
SCALE: AS SHOWN
DATE 10/31/25
JOB NO. 19-1101CE

TITLE
WWTP SITE GRADING-10SC

JOB
JEROME WWTP
GRADING & UTILITIES PLANS
YAVAPAI COUNTY AZ

PREPARED BY:
SEC Inc.
SOUTHWESTERN ENVIRONMENTAL CONSULTANTS, INC
825 COVE PARKWAY
COTTONWOOD, AZ 86326
928-282-7787

SHEET
C2.1
11 OF 99 SHEETS

JOB NO. 19-1101CE

© 2025, SEC, Inc., All Rights Reserved. This document is protected under the United States Copyright Act. No part may be reproduced in any form or by any means or stored in a database or retrieval system, without the prior written permission of SEC, Inc. possible. However, plans/documents could contain unintentional technical inaccuracies, typographical errors or omissions. Users of these plans/documents should understand that it is highly probable that errors and omissions will occur in any plan/document preparation process.

S:\land projects 2004 Engineering\19-1101CE Jerome WWTP\DWG\C3D\Plans\XBGRAD-19-1101CE.dwgS:\LAND PROJECTS 2004 ENGINEERING\19-1101CE JEROME WWTP\DWG\C3D\PLANS\XBGRAD-19-1101CE.DWG

MATCH SHEET C2.0

CALLOUTS-NORTH DRIVE	
1	INSTALL NEW WIDENED ROAD PER DETAIL 2, SHEET C1.2
2	REMOVE EXISTING TREE AS NEEDED TO ACCOMODATE NEW RADIUS AT HWY 89A
3	SAWCUT & REMOVE 2' ASPHALT FOR NEW CONCRETE CONSTRUCTION. REPLACE PER ADOT SPECS.
4	PROVIDE CONCRETE APRON AT CONNECTION TO HWY 89A. 6" CONCRETE OVER 6" AB. PROVIDE SINGLE MAT #4 BARS AT 18" OC BW, CENTERED IN SLAB. PROVIDE EXPANSION & CONTRACTION JOINTS PER ADOT STD DWG C-05.20.
5	MATCH EXISTING DRIVEWAY OR SIDE ROAD

NOTES
1. 2' CONTOURS SHOWN
2. A PERMIT IS REQUIRED FOR ALL WORK WITHIN ADOT RIGHT OF WAY.
3. NEW ACCESS EASEMENTS ARE REQUIRED AT PRIVATE PROPERTIES AS SHOWN IN THESE PLANS. SHOWN FOR REFERENCE ONLY. FINAL DETAILS TO BE COORDINATED BY THE TOWN.

BASELINE EXISTING CEMETERY ROAD
SEE SHEET C2.0

END NORTH DRIVE @ 5+25
BEGIN CEMETERY ROAD @ 15+22.53

EXISTING CEMETERY GATE

END=5+25
PT=5+21.64
R30.00'
PRC=5+09.33
PC=4+94.75
R165.00'
PT=4+75.51
R30.00'
4+00
5+00
PRC=4+39.57

BEGIN EXISTING GRAVEL PARKING AREA,
3+87 +/-

PT=3+54.20
4+00
R70.69'

EXISTING 8' POWER LINE ESMT

NEW ACCESS ESMT REQ'D
APN 401-03-001P

BASELINE NORTH DRIVE

PC=3+30.83
10'
PT=3+02.37
3+00
R22.00'
PRC=2+76.13

TRANSITION LANE WIDTH FROM 9' TO 10'
STA 2+76.13 TO 3+02.37

USE 1:1 SLOPE AND/OR ADD WALL TO FIT NEW EASEMENT. PROVIDE SHOP DWG TO ENGINEER FOR APPROVAL PRIOR TO CONST.

NEW ACCESS EASEMENT REQ'D
APN 401-11-007C
185 SF +/-

NEW ACCESS EASEMENT REQ'D
APN 401-11-031A
25 SF +/-

TRANSITION LANE WIDTH FROM 18' TO 9'
STA 2+30 TO 2+50

APN 401-11-0019U
PATHWAY REAL ESTATE

APN 401-03-001N
TOWN OF JEROME

APN 401-11-005A
PATHWAY REALTY

APN 401-11-005B
CANTO

APN 401-11-006
PETERSON

APN 401-11-007C
LEACHMAN

APN 401-11-031A
CROSBY

APN 401-11-008
McWHIRTER & HUERTA

APN 401-03-001P
JEROME VERDE DEVELOPMENT CO.

0+60.84, 9.00' LT
FG=4868.29

0+25.64, 9.00' LT
FG=4874.10

PT=0+52.48
R30.00'
R20.00'
R35.00'

0+14.34, 23.50' LT
FG=4876.52

PC=0+14.97
R16.00'
BEGIN=0+00

0+12.09, 34.29' RT
FG=4873.67

0+60.84, 9.00' RT
FG=4868.29

1+00
2+00
16.0'
20' R/W
PC=1+68.21
R110.00'

NOTE: THERE IS AN EXISTING WATER UTILITY IN THIS AREA. LOCATION AND DEPTH TBD AT TIME OF CONSTRUCTION

EXISTING BLDG HAS BEEN REMOVED
A NEW BLDG IS PENDING

N O R T H

0 10' 20' 40'
SCALE: 1"=20' @ 24"x36"

Profile View of NORTH DRIVE

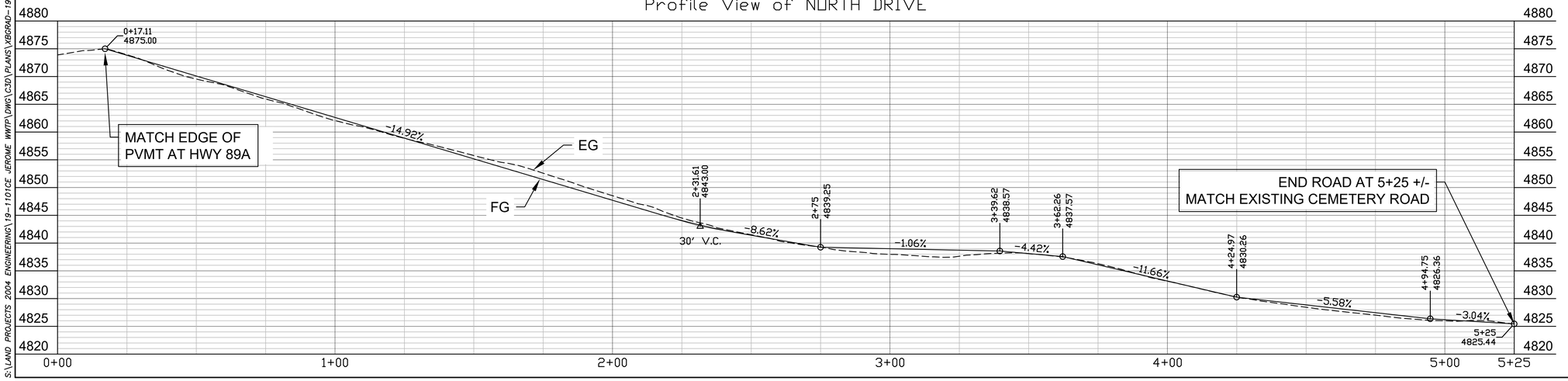

NO	BY	DATE	REVISIONS	DATE	APP.

49106
KRISHAN GEVINDA GINIGE
10/31/25
ARIZONA, U.S.A.

PREPARED BY:
DESIGNED BY:
DRAWN BY: NMW
CHECKED BY: KG
SCALE: AS SHOWN
DATE 10/31/25
JOB NO. 19-1101CE

TITLE
NORTH DR IMPROVEMENTS

JOB
JEROME WWTP
GRADING & UTILITIES PLANS
YAVAPAI COUNTY AZ

PREPARED BY:
SOUTHWESTERN ENVIRONMENTAL CONSULTANTS, INC
825 COVE PARKWAY
COTTONWOOD, AZ 86326
928-282-7787

SHEET
C2.2
12 OF 99 SHEETS

JOB NO. 19-1101CE

© 2025, SEC, Inc., All Rights Reserved. This document is protected under the United States Copyright Act. No part may be reproduced in any form or by any means or stored in a database or retrieval system, without the prior written permission of SEC, Inc. These plans/documents have been prepared using technical knowledge that would be applied by other qualified registrants who practice the same profession in the same area and at the same time. Efforts have been made to be as accurate as possible. However, plans/documents could contain unintentional technical inaccuracies, typographical errors or omissions. Users of these plans/documents should understand that it is highly probable that errors and omissions will occur in any plan/document preparation process.

S:\LAND PROJECTS 2004 ENGINEERING\19-1101CE JEROME WWTP\DWG\C3D\PLANS\XBGRAD-19-1101CE.DWG

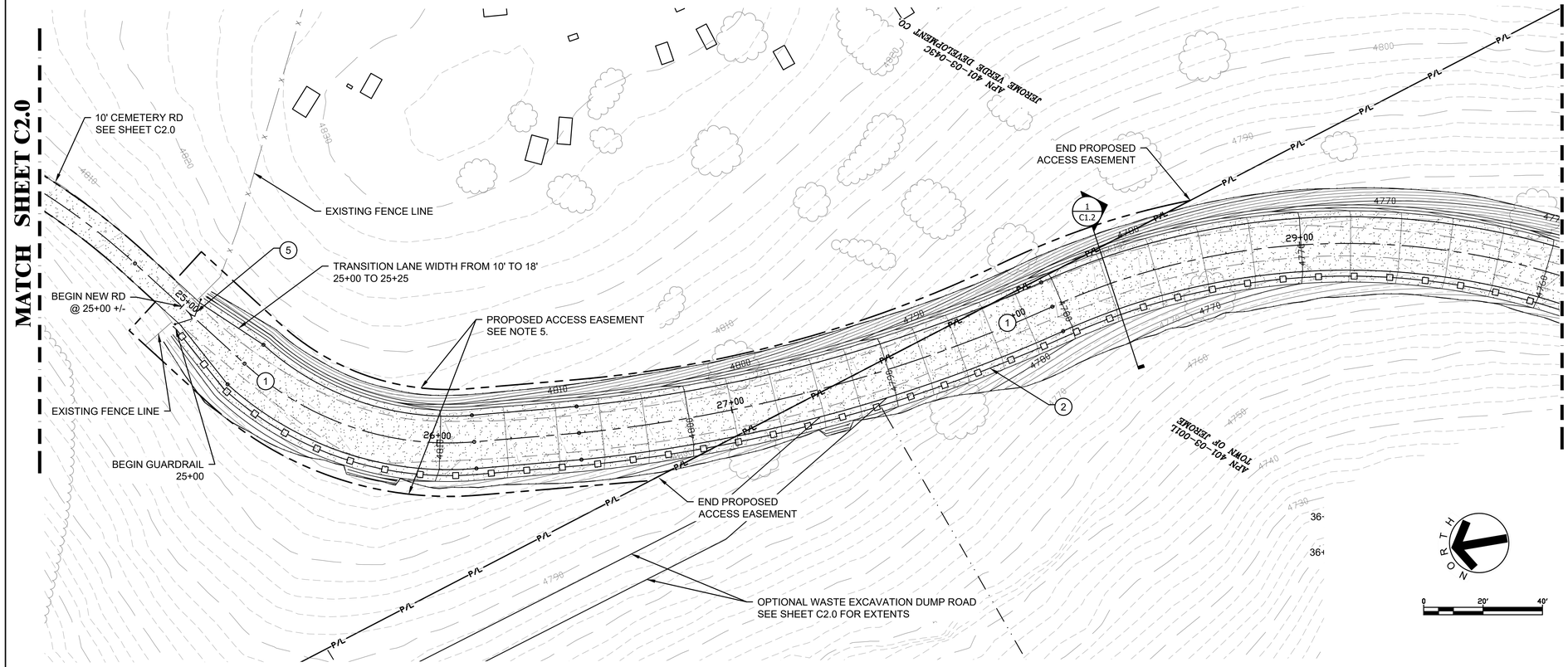

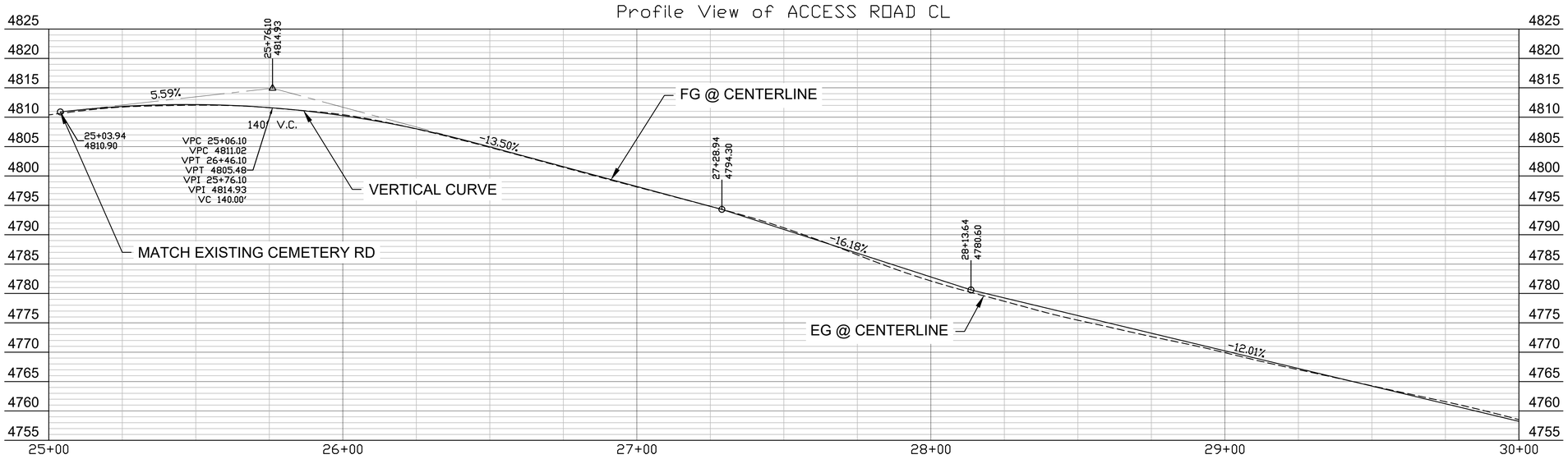

CALLOUTS-WWTP ACCESS RD	
1	INSTALL ACCESS ROAD PER DETAIL 1, SHEET C1.2
2	INSTALL GUARD RAIL PER ADOT STDS OR EQUAL
3	CATCH BASIN PER MSD 537, DOUBLE GRATE & 18" CMP. SEE PROFILE ON THIS SHEET
4	INSTALL 4' WIDE RIP RAP AT DRAIN PIPE OUTLET. SEE NOTE 2.
5	INSTALL 12' WIDE CHAIN LINK SWING GATE AT EXISTING FENCE LINE PER MSD 160 OR AS DIRECTED BY THE TOWN.

NOTES

1. THE CEMETARY IS A HISTORICAL SITE. ANY IMPROVEMENTS SHALL COMPLY WITH THE RESTRICTIONS FOR THE SITE. CONTRACTOR SHALL CONSULT WITH THE TOWN FOR DETAILS.
2. ALL RIP RAP SHALL BE D50=6" x 12" DEEP w/GEOTEXTILE FABRIC UNDERLAY UNLESS OTHERWISE INDICATED.
3. ALL SLOPES STEEPER THAN 2:1 SHALL HAVE EROSION PROTECTION PER GEOTECHNICAL ENGINEER RECOMMENDATIONS.
4. LINE ALL PONDS, DITCHES, DRAINAGE FLOW PATHS WITH RIP RAP TO HEIGHT=MIN. DEPTH. RIP RAP NOT SHOWN FOR CLARITY.
5. PROPOSED ACCESS EASEMENTS ARE REQUIRED THROUGH THE PRIVATE PROPERTIES SHOWN IN THESE PLANS. SHOWN FOR REFERENCE ONLY. FINAL DETAILS TO BE COORDINATED BY THE TOWN.

NO	BY	DATE	REVISIONS	DATE	APP.

Professional Engineer
49109
KRISHAN GEVINDA GINIGE
10/31/25
DATE SIGNED
ARIZONA, U.S.A.

PREPARED BY:
DESIGNED BY:
DRAWN BY: NMW
CHECKED BY: KG
SCALE: AS SHOWN
DATE 10/31/25
JOB NO. 19-1101CE

TITLE
WWTP ACCESS RD P&P 25+00+TO 30+00

JOB
JEROME WWTP
GRADING & UTILITIES PLANS
YAVAPAI COUNTY AZ

PREPARED BY:
SEC Inc.
SOUTHWESTERN ENVIRONMENTAL CONSULTANTS, INC
825 COVE PARKWAY
COTTONWOOD, AZ 86326
928-282-7787

SHEET
C2.3
13 OF 99 SHEETS

JOB NO. 19-1101CE

© 2025, SEC, Inc., All Rights Reserved. This document is protected under the United States Copyright Act. No part may be reproduced in any form or by any means or stored in a database or retrieval system, without the prior written permission of SEC, Inc. These plans/documents have been prepared using technical knowledge that would be applied by other qualified registrants who practice the same profession in the same area and at the same time. Efforts have been made to be as accurate as possible. However, plans/documents could contain unintentional technical inaccuracies, typographical errors or omissions. Users of these plans/documents should understand that it is highly probable that errors and omissions will occur in any plan/document preparation process.

S:\LAND PROJECTS 2004 ENGINEERING\19-1101CE JEROME WWTP\DWG\C3D\PLANS\XBGRAD-19-1101CE.DWG

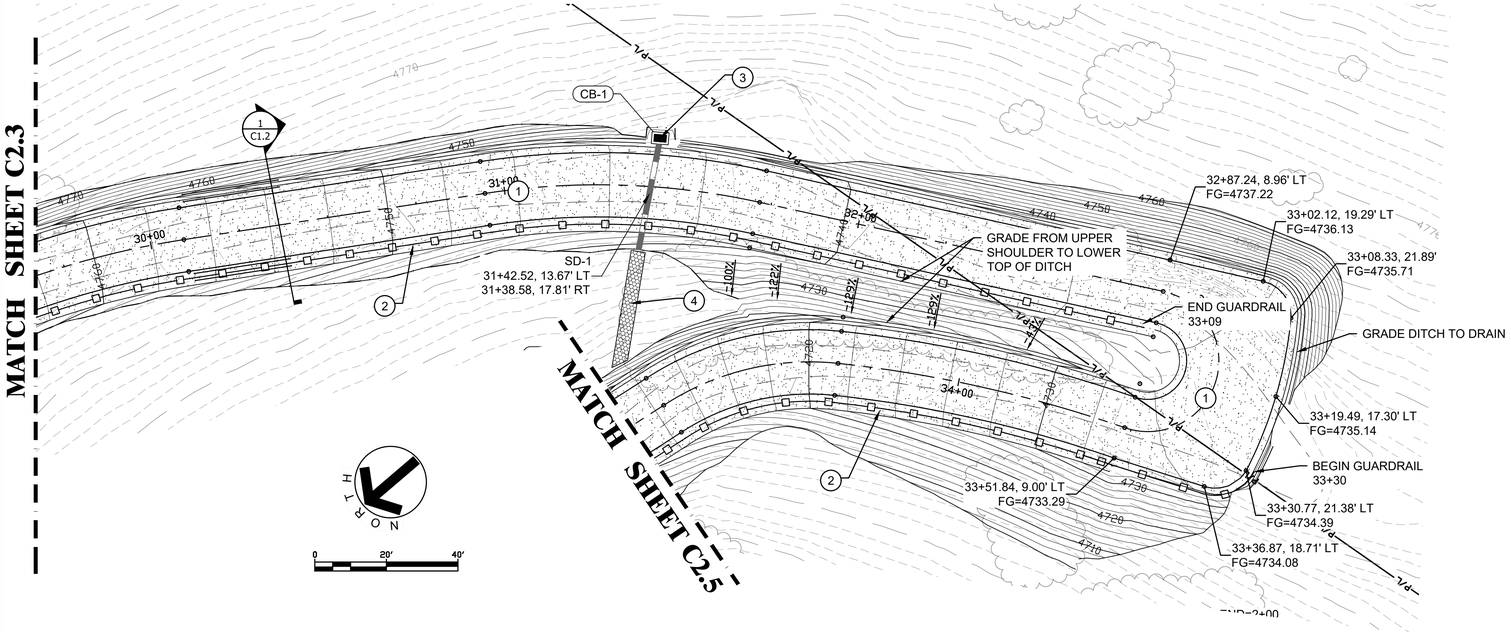

CALLOUTS-WWTP ACCESS RD	
1	INSTALL ACCESS ROAD PER DETAIL 1, SHEET C1.2
2	INSTALL GUARD RAIL PER ADOT STDS OR EQUAL
3	CATCH BASIN PER MSD 537, DOUBLE GRATE & 18" CMP. SEE PROFILE ON THIS SHEET
4	INSTALL 4' WIDE RIP RAP AT DRAIN PIPE OUTLET. SEE NOTE 2.
5	INSTALL 12' WIDE CHAIN LINK SWING GATE AT EXISTING FENCE LINE PER MSD 160 OR AS DIRECTED BY THE TOWN.

NOTES
1. THE CEMETARY IS A HISTORICAL SITE. ANY IMPROVEMENTS SHALL COMPLY WITH THE RESTRICTIONS FOR THE SITE. CONTRACTOR SHALL CONSULT WITH THE TOWN FOR DETAILS.
2. ALL RIP RAP SHALL BE D50=6" x 12" DEEP w/GEOTEXTILE FABRIC UNDERLAY UNLESS OTHERWISE INDICATED.
3. ALL SLOPES STEEPER THAN 2:1 SHALL HAVE EROSION PROTECTION PER GEOTECHNICAL ENGINEER RECOMMENDATIONS.
4. LINE ALL PONDS, DITCHES, DRAINAGE FLOW PATHS WITH RIP RAP TO HEIGHT=MIN. DEPTH. RIP RAP NOT SHOWN FOR CLARITY.
5. PROPOSED ACCESS EASEMENTS ARE REQUIRED THROUGH THE PRIVATE PROPERTIES SHOWN IN THESE PLANS. SHOWN FOR REFERENCE ONLY. FINAL DETAILS TO BE COORDINATED BY THE TOWN.

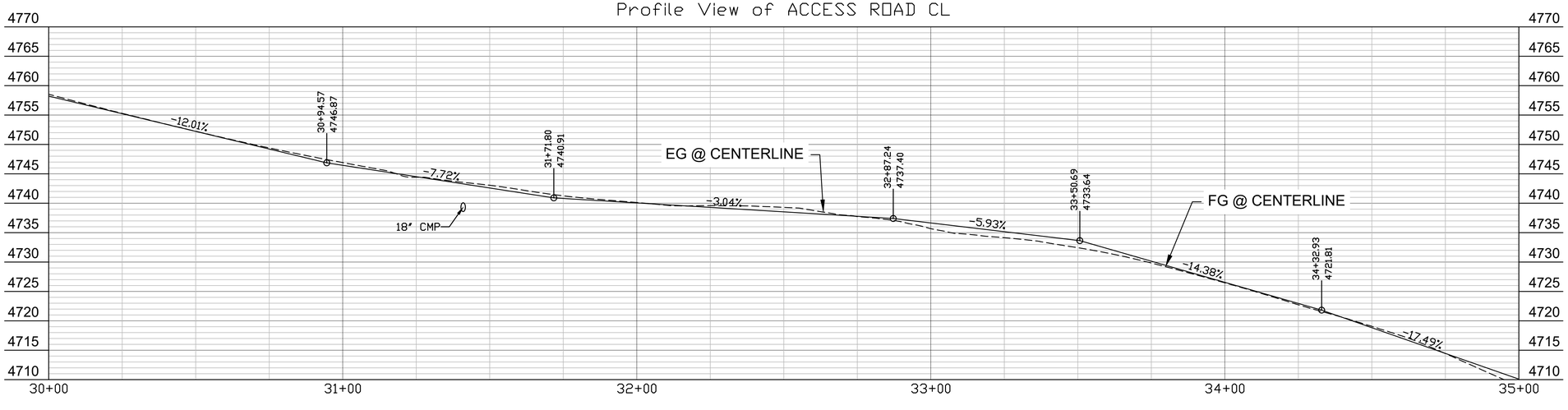

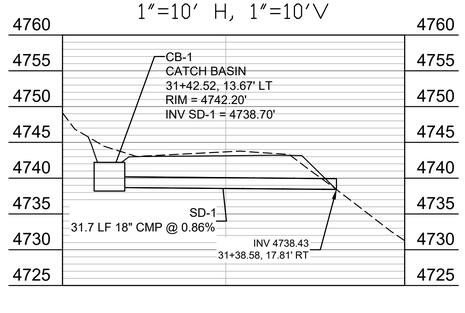

NO	BY	DATE	REVISIONS	DATE	APP.

49106
KRISHAN GEVINDA GINIGE
10/31/25
REGISTERED PROFESSIONAL ENGINEER
ARIZONA, U.S.A.

PREPARED BY:
DESIGNED BY:
DRAWN BY: NMW
CHECKED BY: KG
SCALE: AS SHOWN
DATE 10/31/25
JOB NO. 19-1101CE

TITLE
WWTP ACCESS RD P&P 30+00 TO 35+00

JOB
JEROME WWTP
GRADING & UTILITIES PLANS
YAVAPAI COUNTY AZ

PREPARED BY:
SOUTHWESTERN ENVIRONMENTAL CONSULTANTS, INC
825 COVE PARKWAY
COTTONWOOD, AZ 86326
928-282-7787

SHEET
C2.4
14 OF 99 SHEETS

JOB NO. 19-1101CE

© 2025, SEC, Inc., All Rights Reserved. This document is protected under the United States Copyright Act. No part may be reproduced in any form or by any means or stored in a database or retrieval system, without the prior written permission of SEC, Inc. These plans/documents have been prepared using technical knowledge that would be applied by other qualified registrants who practice the same profession in the same area and at the same time. Efforts have been made to be as accurate as possible. However, plans/documents could contain unintentional technical inaccuracies, typographical errors or omissions. Users of these plans/documents should understand that it is highly probable that errors and omissions will occur in any plan/document preparation process.

S:\LAND PROJECTS 2004 ENGINEERING\19-1101CE JEROME WWTP\DWG\C3D\PLANS\XBGRAD-19-1101CE.DWG

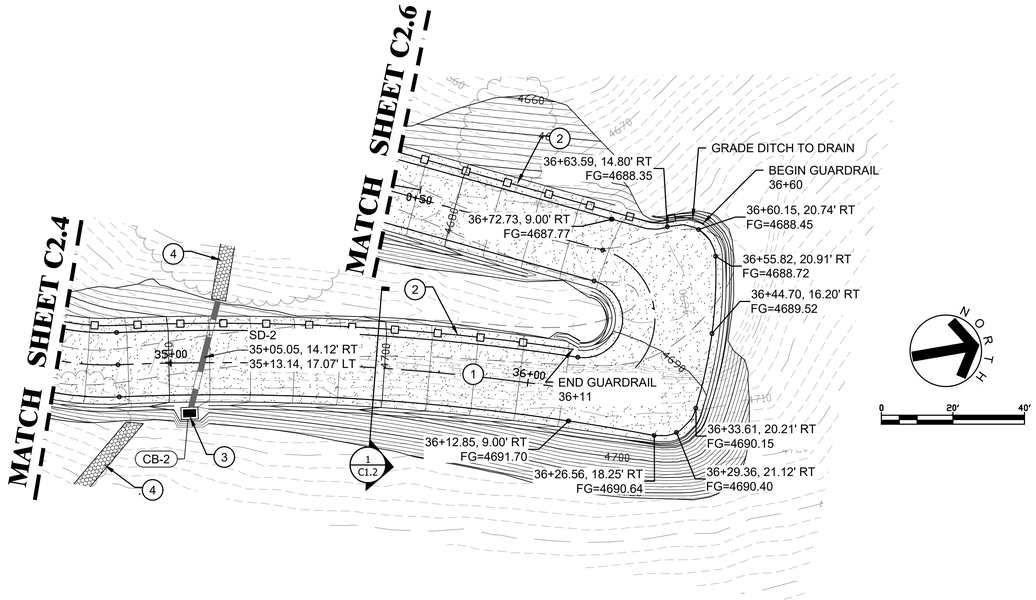

CALLOUTS-WWTP ACCESS RD	
1	INSTALL ACCESS ROAD PER DETAIL 1, SHEET C1.2
2	INSTALL GUARD RAIL PER ADOT STDS OR EQUAL
3	CATCH BASIN PER MSD 537, DOUBLE GRATE & 18" CMP. SEE PROFILE ON THIS SHEET
4	INSTALL 4' WIDE RIP RAP AT DRAIN PIPE OUTLET. SEE NOTE 2.
5	INSTALL 12' WIDE CHAIN LINK SWING GATE AT EXISTING FENCE LINE PER MSD 160 OR AS DIRECTED BY THE TOWN.

NOTES
1. THE CEMETARY IS A HISTORICAL SITE. ANY IMPROVEMENTS SHALL COMPLY WITH THE RESTRICTIONS FOR THE SITE. CONTRACTOR SHALL CONSULT WITH THE TOWN FOR DETAILS.
2. ALL RIP RAP SHALL BE D50=6" x 12" DEEP w/GEOTEXTILE FABRIC UNDERLAY UNLESS OTHERWISE INDICATED.
3. ALL SLOPES STEEPER THAN 2:1 SHALL HAVE EROSION PROTECTION PER GEOTECHNICAL ENGINEER RECOMMENDATIONS.
4. LINE ALL PONDS, DITCHES, DRAINAGE FLOW PATHS WITH RIP RAP TO HEIGHT=MIN. DEPTH. RIP RAP NOT SHOWN FOR CLARITY.
5. PROPOSED ACCESS EASEMENTS ARE REQUIRED THROUGH THE PRIVATE PROPERTIES SHOWN IN THESE PLANS. SHOWN FOR REFERENCE ONLY. FINAL DETAILS TO BE COORDINATED BY THE TOWN.

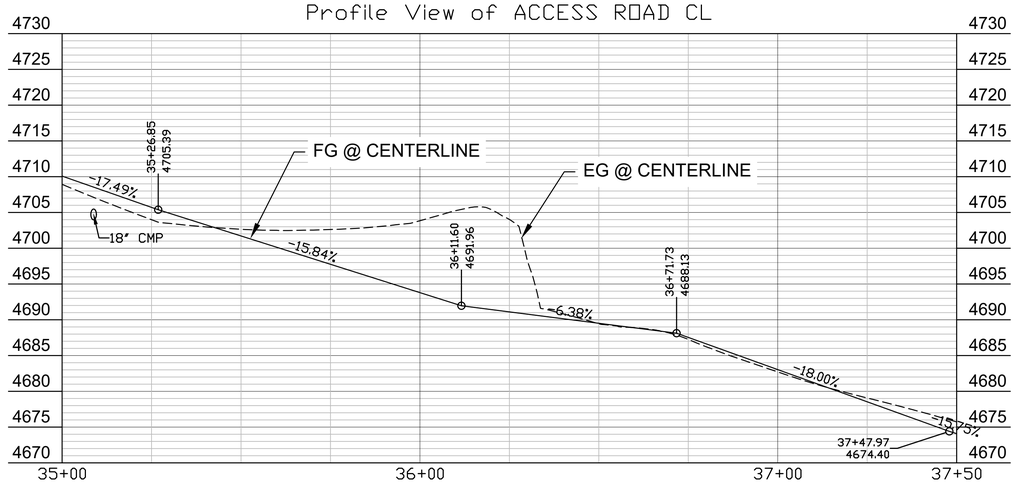

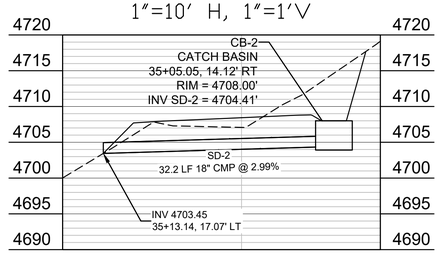

NO	BY	DATE	REVISIONS	DATE	APP.

Professional Engineer
49108
KRISHAN GEVINDA GINIGE
CERTIFICATE NO.
DATE SIGNED 10/31/25
ARIZONA, U.S.A.

PREPARED BY:
DESIGNED BY:
DRAWN BY: NMW
CHECKED BY: KG
SCALE: AS SHOWN
DATE 10/31/25
JOB NO. 19-1101CE

TITLE
WWTP ACCESS RD P&P 35+00 TO 37+50

JOB
JEROME WWTP
GRADING & UTILITIES PLANS
YAVAPAI COUNTY AZ

PREPARED BY:
SOUTHWESTERN ENVIRONMENTAL CONSULTANTS, INC
825 COVE PARKWAY
COTTONWOOD, AZ 86326
928-282-7787

SHEET
C2.5
15 OF 99 SHEETS

JOB NO. 19-1101CE

© 2025, SEC, Inc., All Rights Reserved. This document is protected under the United States Copyright Act. No part may be reproduced in any form or by any means or stored in a database or retrieval system, without the prior written permission of SEC, Inc. These plans/documents have been prepared using technical knowledge that would be applied by other qualified registrants who practice the same profession in the same area and at the same time. Efforts have been made to be as accurate as possible. However, plans/documents could contain unintentional technical inaccuracies, typographical errors or omissions. Users of these plans/documents should understand that it is highly probable that errors and omissions will occur in any plan/document preparation process.

S:\LAND PROJECTS 2004 ENGINEERING\19-1101CE JEROME WWTP\DWG\C3D\PLANS\XBGRAD-19-1101CE.DWG

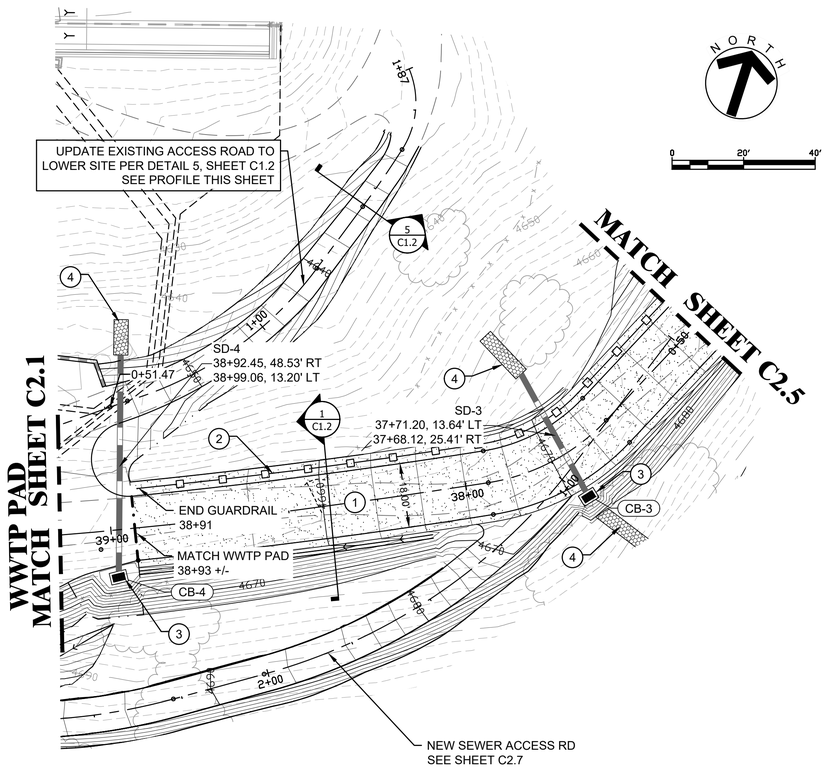

CALLOUTS-WWTP ACCESS RD	
1	INSTALL ACCESS ROAD PER DETAIL 1, SHEET C1.2
2	INSTALL GUARD RAIL PER ADOT STDS OR EQUAL
3	CATCH BASIN PER MSD 537, DOUBLE GRATE & 18" CMP. SEE PROFILE ON THIS SHEET
4	INSTALL 4' WIDE RIP RAP AT DRAIN PIPE OUTLET. SEE NOTE 2.
5	INSTALL 12' WIDE CHAIN LINK SWING GATE AT EXISTING FENCE LINE PER MSD 160 OR AS DIRECTED BY THE TOWN.

NOTES
1. THE CEMETARY IS A HISTORICAL SITE. ANY IMPROVEMENTS SHALL COMPLY WITH THE RESTRICTIONS FOR THE SITE. CONTRACTOR SHALL CONSULT WITH THE TOWN FOR DETAILS.
2. ALL RIP RAP SHALL BE D50=6" x 12" DEEP w/GEOTEXTILE FABRIC UNDERLAY UNLESS OTHERWISE INDICATED.
3. ALL SLOPES STEEPER THAN 2:1 SHALL HAVE EROSION PROTECTION PER GEOTECHNICAL ENGINEER RECOMMENDATIONS.
4. LINE ALL PONDS, DITCHES, DRAINAGE FLOW PATHS WITH RIP RAP TO HEIGHT=MIN. DEPTH. RIP RAP NOT SHOWN FOR CLARITY.
5. PROPOSED ACCESS EASEMENTS ARE REQUIRED THROUGH THE PRIVATE PROPERTIES SHOWN IN THESE PLANS. SHOWN FOR REFERENCE ONLY. FINAL DETAILS TO BE COORDINATED BY THE TOWN.

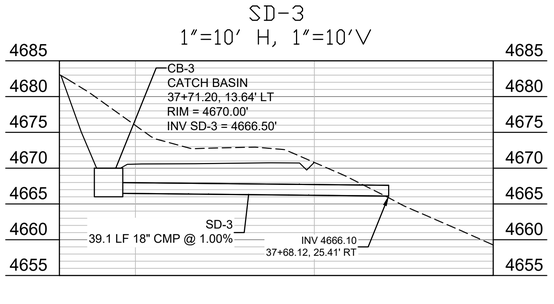

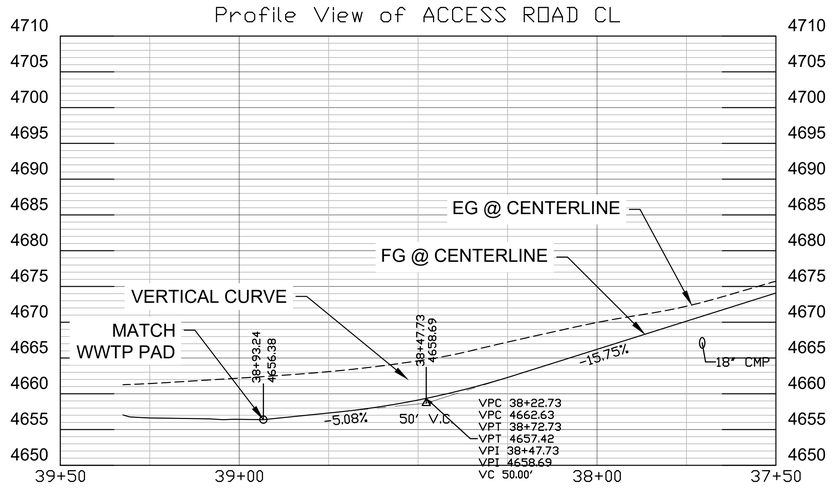

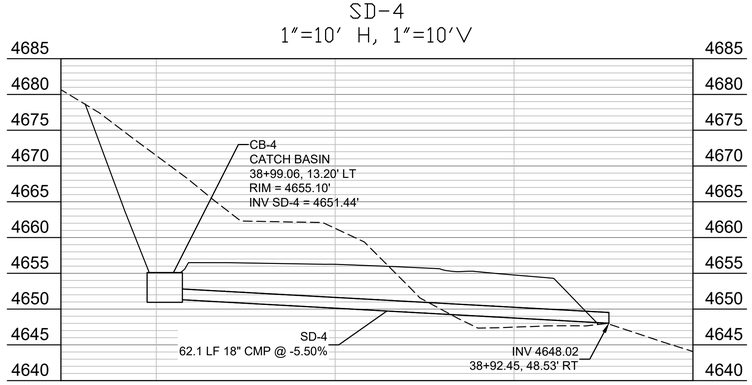

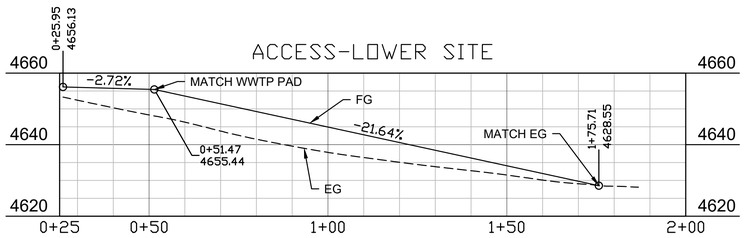

NO	BY	DATE	REVISIONS	DATE	APP.

PREPARED BY:
DESIGNED BY:
DRAWN BY: NMW
CHECKED BY: KG
SCALE: AS SHOWN
DATE 10/31/25
JOB NO. 19-1101CE

TITLE
WWTP ACCESS RD P&P 37+50 TO 39+75

JOB
JEROME WWTP
GRADING & UTILITIES PLANS
YAVAPAI COUNTY AZ

PREPARED BY:
SOUTHWESTERN ENVIRONMENTAL CONSULTANTS, INC
825 COVE PARKWAY
COTTONWOOD, AZ 86326
928-282-7787

SHEET
C2.6
16 OF 99 SHEETS

JOB NO. 19-1101CE

© 2025, SEC, Inc., All Rights Reserved. This document is protected under the United States Copyright Act. No part may be reproduced in any form or by any means or stored in a database or retrieval system, without the prior written permission of SEC, Inc. These plans/documents have been prepared using technical knowledge that would be applied by other qualified registrants who practice the same profession in the same area and at the same time. Efforts have been made to be as accurate as possible. However, plans/documents could contain unintentional technical inaccuracies, typographical errors or omissions. Users of these plans/documents should understand that it is highly probable that errors and omissions will occur in any plan/document preparation process.

S:\LAND PROJECTS 2004 ENGINEERING\19-1101CE JEROME WWTP\DWG\C3D\PLANS\XBGRAD-19-1101CE.DWG

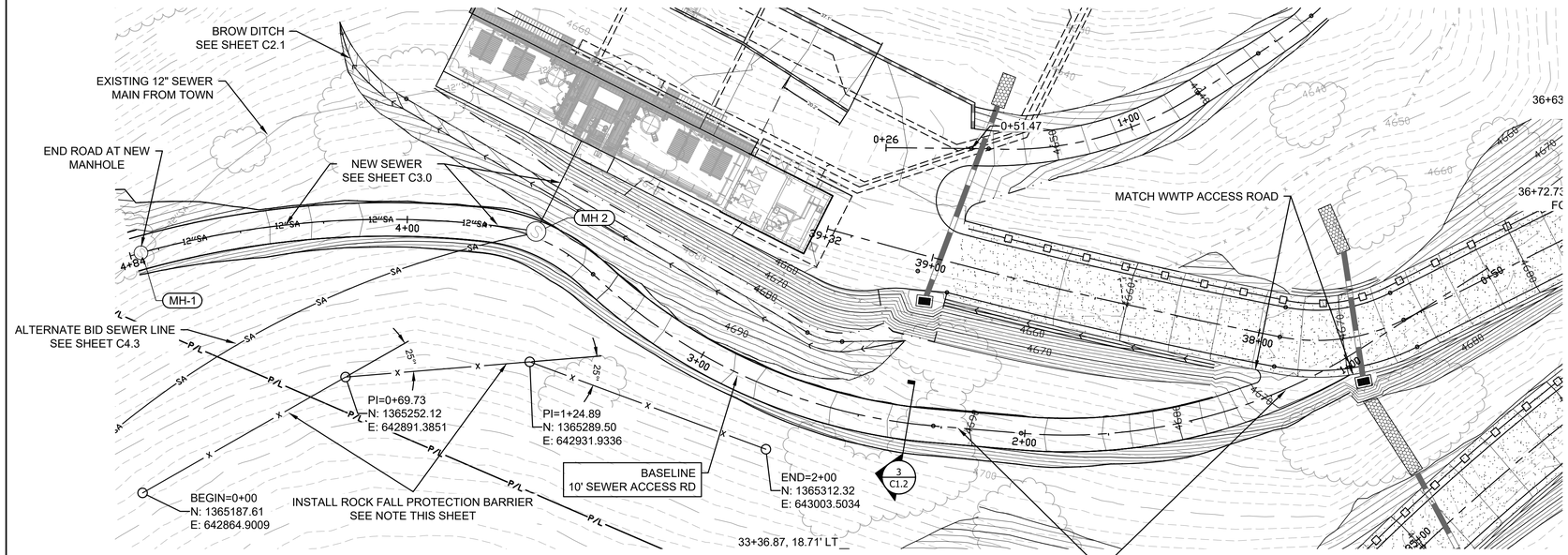

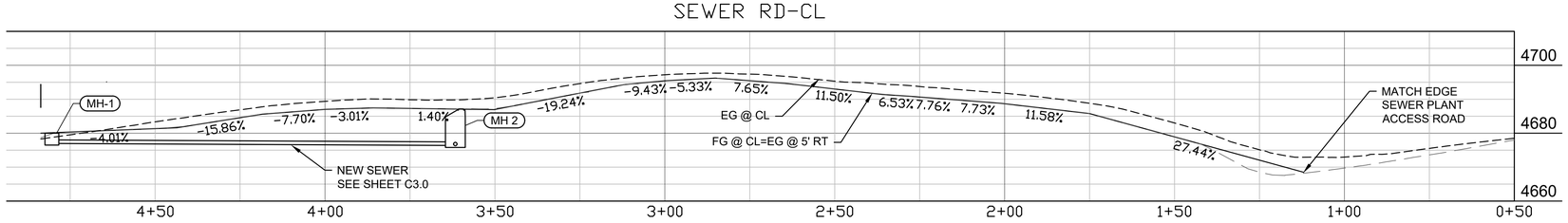

ROCK FALL PROTECTION BARRIER
PROVIDE ROCK FALL PROTECTION BARRIER. ALTERNATE BID ITEM. SEE PLAN SPECIFICATIONS FOR DETAILS.

NO	BY	DATE	REVISIONS	DATE	APP.

49106
KRISHAN
GEVINDA
GINIGE
10/31/25
ARIZONA, U.S.A.

PREPARED BY:
DESIGNED BY:
DRAWN BY: NMW
CHECKED BY: KG
SCALE: AS SHOWN
DATE 10/31/25
JOB NO. 19-1101CE

TITLE
NEW SEWER ACCESS ROAD

JOB
JEROME WWTP
GRADING & UTILITIES PLANS
YAVAPAI COUNTY AZ

PREPARED BY:
SOUTHWESTERN ENVIRONMENTAL CONSULTANTS, INC
825 COVE PARKWAY
COTTONWOOD, AZ 86326
928-282-7787

SHEET
C2.7
17 OF 99 SHEETS

JOB NO. 19-1101CE

© 2025, SEC, Inc. All Rights Reserved. This document is protected under the United States Copyright Act. No part may be reproduced in any form or by any means or stored in a database or retrieval system, without the prior written permission of SEC, Inc. These plans/documents have been prepared using technical knowledge that would be applied by other qualified registrants who practice the same profession in the same area and at the same time. Efforts have been made to be as accurate as possible. However, plans/documents could contain unintentional technical inaccuracies, typographical errors or omissions. Users of these plans/documents should understand that it is highly probable that errors and omissions will occur in any plan/document preparation process.

S:\LAND PROJECTS 2004 ENGINEERING\19-1101CE JEROME WWTP\DWG\C3D\PLANS\XBGRAD-19-1101CE.DWG

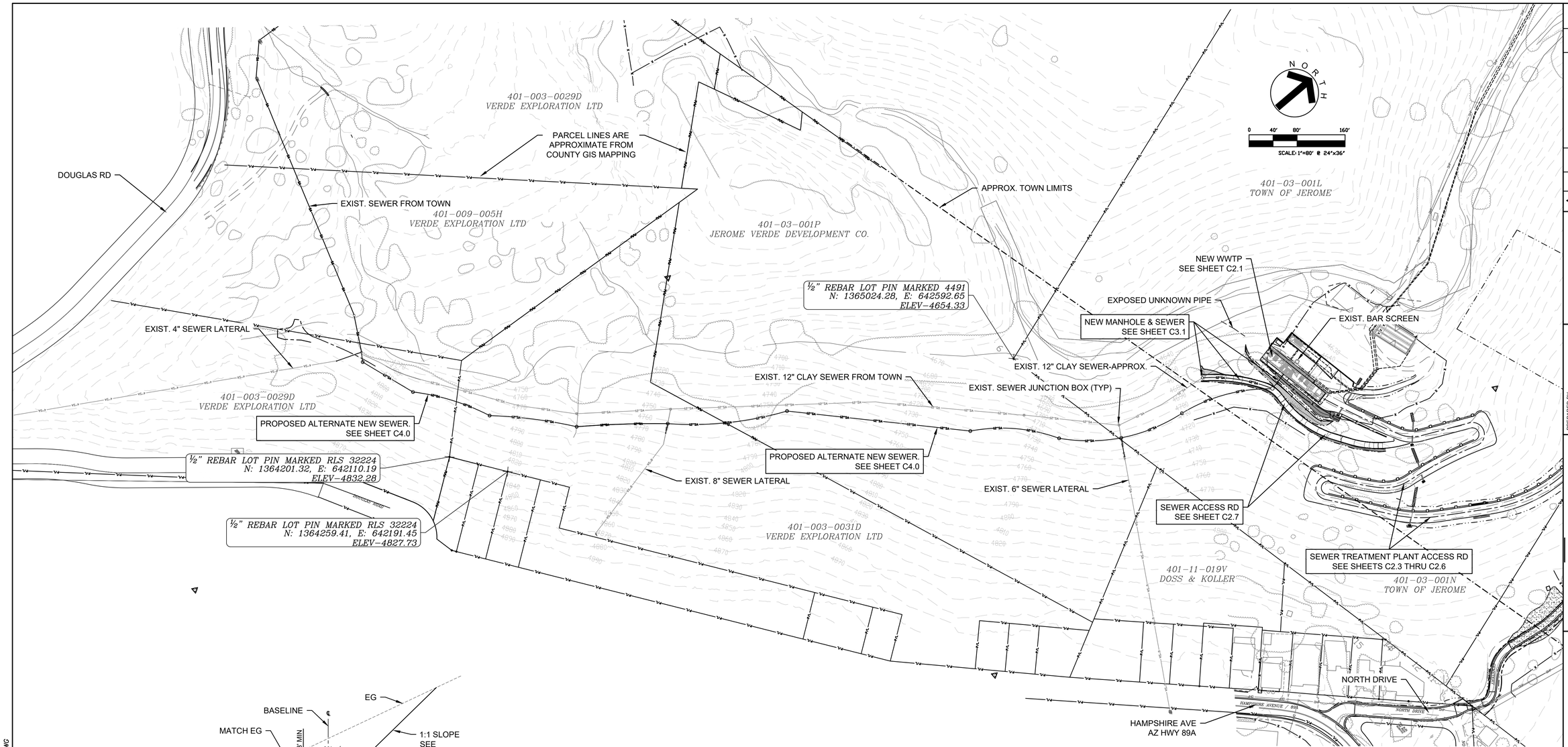

1 TYPICAL SEWER ROAD SECTION

1"=6'

CONSTRUCTION NOTES

1. THE EXISTING SEWER PIPES ARE VERY SHALLOW. EXTREME CAUTION IS REQUIRED TO ENSURE THE PIPES ARE PROTECTED DURING CONSTRUCTION. EXISTING SEWER TO REMAIN OPERATIONAL AT ALL TIMES UNTIL THE NEW SEWER IS ACTIVATED.
2. ALL TEMPORARY AND NEW SEWER PIPES AND STRUCTURES SHALL BE INSTALLED PER THE SPECIFICATIONS PROVIDED BY THE SEWER PLANT ENGINEER.

STRUCTURES					
STRUCTURE	DESC	RIM	INVERT	DEPTH (FT)	LOCATION
MH-1	MANHOLE-48"	4680.000'	OUT = 4677.00'	3.00	N: 1365243.77 E: 642820.46
MH 2	MANHOLE-60"	4687.137'	IN = 4676.40' OUT = 4676.30'	10.83	N: 1365321.33 E: 642909.50

PIPES			
PIPE	SIZE & TYPE	LENGTH	SLOPE
SS-1	12" FPVC	119.01'	0.50%
SS-2	12" DIP SEWER	30.20'	10.31%

ESTIMATE OF SEWER QTY'S		
ITEM	QTY	UNITS
12" PVC PIPE	100	LF
12" DIP	42	LF
48" MANHOLE	1	EA
60" DROP MANHOLE	1	EA

NO	BY	DATE	REVISIONS	DATE	APP.

Registered Professional Engineer (Civil)
CERTIFICATE NO.
49108
KRISHAN GEVINDA GINIGE
10/31/25
DATE SIGNED
ARIZONA, U.S.A.

PREPARED BY:
DESIGNED BY:
DRAWN BY: NMW
CHECKED BY: KG
SCALE: AS SHOWN
DATE: 10/31/25
JOB NO. 19-1101CE

TITLE: NEW SEWER SITE MAP, SURVEY CONTROL

JOB: JEROME WWTP
GRADING & UTILITIES PLANS
YAVAPAI COUNTY AZ

PREPARED BY:
SOUTHWESTERN ENVIRONMENTAL CONSULTANTS, INC
825 COVE PARKWAY
COTTONWOOD, AZ 86326
928-282-7787

SHEET
C3.0
18 OF 99 SHEETS

JOB NO. 19-1101CE

© 2025, SEC, Inc., All Rights Reserved. This document is protected under the United States Copyright Act. No part may be reproduced in any form or by any means or stored in a database or retrieval system, without the prior written permission of SEC, Inc. These plans/documents have been prepared using technical knowledge that would be applied by other qualified registrants who practice this same profession in the same area and at the same time. Efforts have been made to be as accurate as possible. However, plans/documents could contain unintentional technical inaccuracies, typographical errors or omissions. Users of these plans/documents should understand that it is highly probable that errors and omissions will occur in any plan/document preparation process.

S:\LAND PROJECTS 2004 ENGINEERING\19-1101CE JEROME WWTP\DWG\C3D\PLANS\XBSAN-19-1101CE.DWG

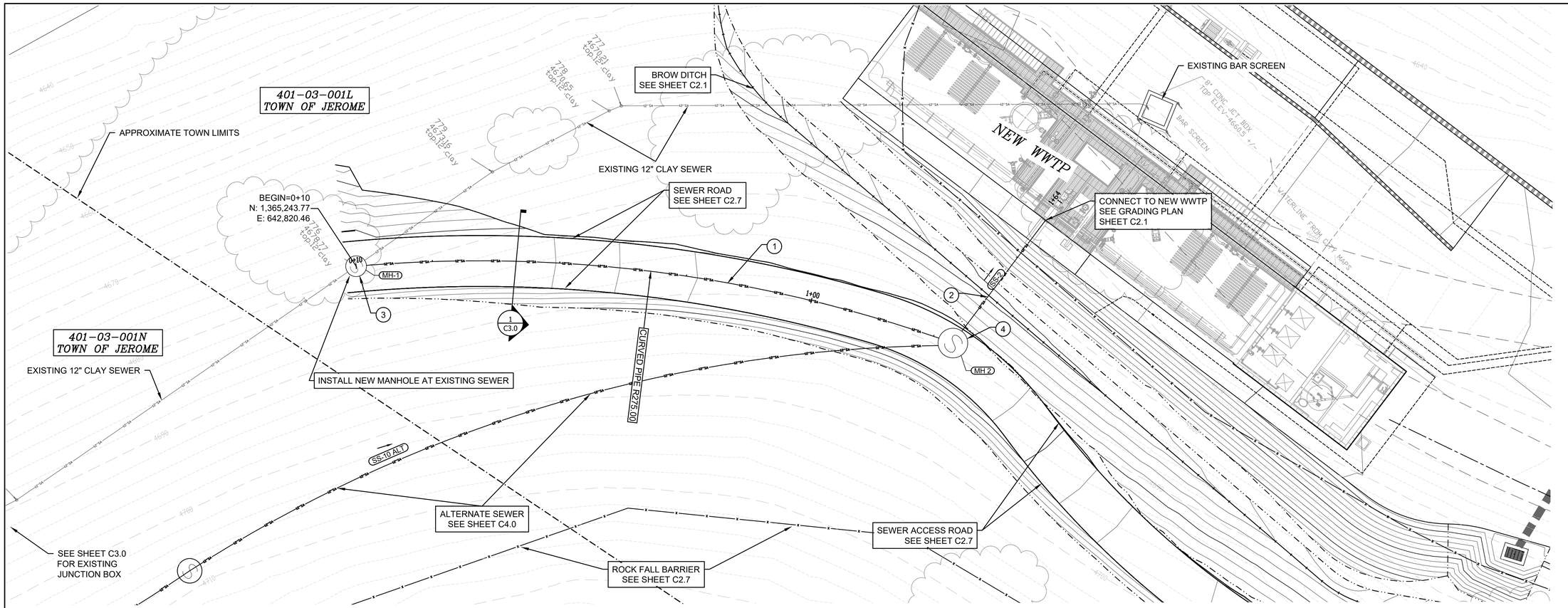

SEWER CALLOUTS. SEE CONSTRUCTION NOTES ON SHEET C3.0	
1	INSTALL 12" FPVC SEWER PIPE. CURVE PIPE @ 275' MIN. RADIUS. SEE NOTE 2, SHEET C3.0
2	INSTALL 12" DIP SEWER LINE
3	INSTALL 48" FLAT TOP SEWER MANHOLE PER MSD 420-1
4	INSTALL 60" SEWER MANHOLE PER MSD 420-1

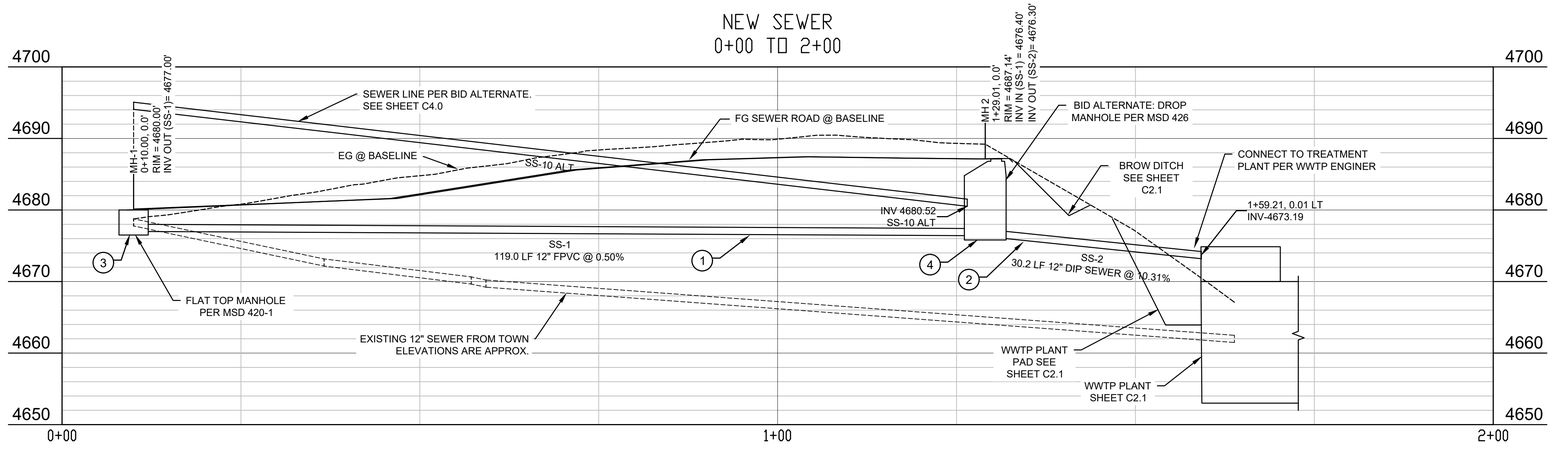

NO	BY	DATE	REVISIONS	DATE	APP.

Professional Engineer
CERTIFICATE NO.
49100
KRISHAN
GEVINDA
GINIGE
10/31/25
DATE SIGNED
ARIZONA, U.S.A.

PREPARED BY:
DESIGNED BY:
DRAWN BY: NMW
CHECKED BY: KG
SCALE: AS SHOWN
DATE 10/31/25
JOB NO. 19-1101CE

TITLE
NEW SEWER P&P

JOB
JEROME WWTP
GRADING & UTILITIES PLANS
YAVAPAI COUNTY AZ

PREPARED BY:
SOUTHWESTERN ENVIRONMENTAL CONSULTANTS, INC
825 COVE PARKWAY
COTTONWOOD, AZ 86326
928-282-7787

SHEET
C3.1
19 OF 99 SHEETS

JOB NO. 19-1101CE

© 2025, SEC, Inc., All Rights Reserved. This document is protected under the United States Copyright Act. No part may be reproduced in any form or by any means or stored in a database or retrieval system, without the prior written permission of SEC, Inc. These plans/documents have been prepared using technical knowledge that would be applied by other qualified registrants who practice the same profession in the same area and at the same time. Efforts have been made to be as accurate as possible. However, plans/documents could contain unintentional technical inaccuracies, typographical errors or omissions. Users of these plans/documents should understand that it is highly probable that errors and omissions will occur in any plan/document preparation process.

S:\LAND PROJECTS 2004 ENGINEERING\19-1101CE JEROME WWTP\DWG\C3D\PLANS\XBSAN-19-1101CE.DWG

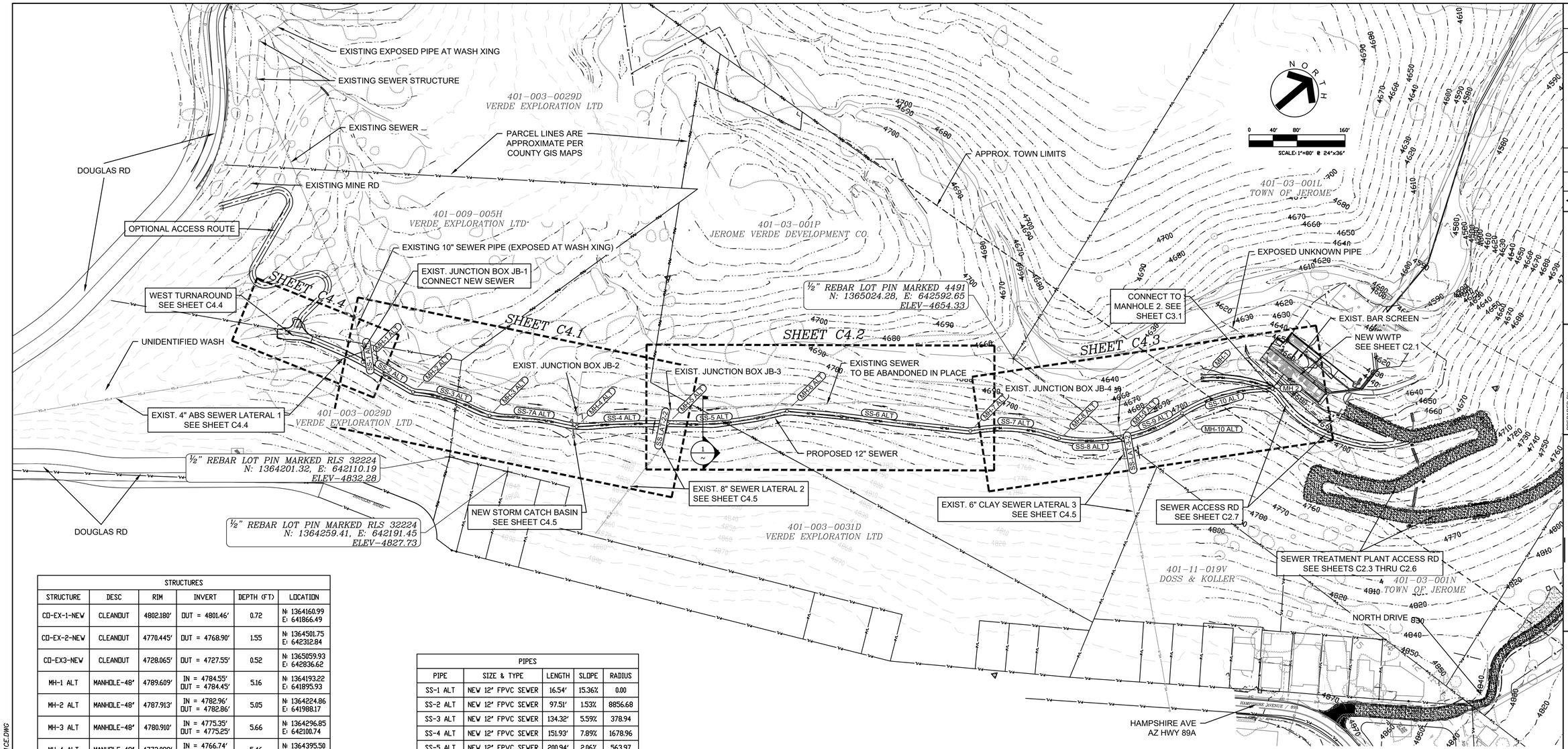

STRUCTURES					
STRUCTURE	DESC	RIM	INVERT	DEPTH (FT)	LOCATION
CO-EX-1-NEW	CLEANOUT	4802.180'	OUT = 4801.46'	0.72	N: 1364160.99 E: 641866.49
CO-EX-2-NEW	CLEANOUT	4770.445'	OUT = 4768.90'	1.55	N: 1364501.75 E: 642312.84
CO-EX3-NEW	CLEANOUT	4728.065'	OUT = 4727.55'	0.52	N: 1365059.93 E: 642836.62
MH-1 ALT	MANHOLE-48"	4789.609'	IN = 4784.55' OUT = 4784.45'	5.16	N: 1364193.22 E: 641895.93
MH-2 ALT	MANHOLE-48"	4787.913'	IN = 4782.96' OUT = 4782.86'	5.05	N: 1364224.86 E: 641988.17
MH-3 ALT	MANHOLE-48"	4780.910'	IN = 4775.35' OUT = 4775.25'	5.66	N: 1364296.85 E: 642100.74
MH-4 ALT	MANHOLE-48"	4772.099'	IN = 4766.74' OUT = 4766.64'	5.46	N: 1364395.50 E: 642208.64
MH-5 ALT	MANHOLE-48"	4759.803'	IN = 4754.64' IN = 4754.85' OUT = 4754.54'	5.26	N: 1364514.63 E: 642302.84
MH-6 ALT	MANHOLE-48"	4754.907'	IN = 4750.41' OUT = 4750.31'	4.59	N: 1364679.90 E: 642415.26
MH-7 ALT	MANHOLE-48"	4729.609'	IN = 4724.18' OUT = 4724.08'	5.53	N: 1364891.34 E: 642638.12
MH-8 ALT	MANHOLE-48"	4712.834'	IN = 4706.04' OUT = 4705.94'	6.89	N: 1364996.38 E: 642743.01
MH-9 ALT	MANHOLE-48"	4705.547'	IN = 4699.49' IN = 4700.39' OUT = 4699.39'	6.16	N: 1365075.93 E: 642809.37
MH-10 ALT	MANHOLE-48"	4704.172'	IN = 4699.06' OUT = 4698.96'	5.21	N: 1365179.64 E: 642843.49

PIPES				
PIPE	SIZE & TYPE	LENGTH	SLOPE	RADIUS
SS-1 ALT	NEW 12" FPVC SEWER	16.54'	15.36%	0.00
SS-2 ALT	NEW 12" FPVC SEWER	97.51'	1.53%	8856.68
SS-3 ALT	NEW 12" FPVC SEWER	134.32'	5.59%	378.94
SS-4 ALT	NEW 12" FPVC SEWER	151.93'	7.89%	1678.96
SS-5 ALT	NEW 12" FPVC SEWER	200.94'	2.06%	563.97
SS-6 ALT	NEW 12" FPVC SEWER	307.21'	8.51%	28124.53
SS-7 ALT	NEW 12" FPVC SEWER	150.27'	12.01%	277.65
SS-7A ALT	NEW 12" FPVC SEWER	146.41'	5.81%	779.23
SS-8 ALT	NEW 12" FPVC SEWER	104.13'	6.20%	296.23
SS-9 ALT	NEW 12" FPVC SEWER	109.85'	0.30%	286.54
SS-10 ALT	NEW 12" FPVC SEWER	155.46'	11.86%	278.54
SS-LAT-3-2	NEW 6' SEWER	27.25'	99.44%	0.00
SS-LAT 1-1	NEW 4' DIP SEWER	25.88'	1.00%	0.00
SS-LAT 1-2	NEW 4' SEWER	16.70'	80.70%	0.00
SS LAT-2-2	NEW 8' SEWER	12.60'	110.87%	0.00
SS LAT-3-1	NEW 6' SEWER	4.35'	1.77%	0.00
SS LAT 2-1	NEW 8' SEWER	3.71'	2.00%	0.00

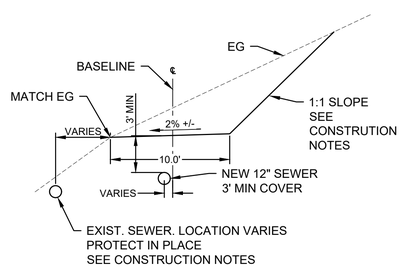

1 TYPICAL CONSTRUCTION ROAD SECTION
1"=6'

CONSTRUCTION NOTES
1. THE EXISTING SEWER IS VERY SHALLOW. EXTREME CAUTION IS REQUIRED TO ENSURE THE PIPE IS PROTECTED DURING CONSTRUCTION. EXISTING SEWER TO REMAIN OPERATIONAL AT ALL TIMES UNTIL THE NEW SEWER IS ACTIVATED.
2. THE EXISTING LATERAL SEWERS SHALL BE TEMPORARILY RE-ROUTED AS NEEDED DURING CONSTRUCTION. TO REMAIN OPERATIONAL UNTIL THE NEW SEWER IS ACTIVATED
3. WASTE MATERIAL FROM THE SEWER AND ROAD CONSTRUCTION SHALL BE REMOVED FROM PRIVATELY OWNED PROPERTIES.
4. CUT SLOPES STEEPER THAN 2:1 SHOULD BE EVALUATED AND APPROVED BY GEOTECHNICAL ENGINEER.
5. ALL TEMPORARY AND NEW SEWER PIPES AND STRUCTURES SHALL BE INSTALLED PER THE SPECIFICATIONS PROVIDED BY THE SEWER PLANT ENGINEER.
6. NEW EASEMENTS ARE NEEDED FOR BOTH EXISTING AND PROPOSED SEWER ACROSS PRIVATE PROPERTIES. TO BE COORDINATED BY THE TOWN.

EARTHWORK ESTIMATE (CUBIC YARDS)*			
	CUT	FILL	NET
SEWER ROAD	4,043	33	4010 CUT
*NO SHRINKAGE OR EXPANSION FACTORS APPLIED. EARTHWORK IS TO FINISHED GRADE. DEPTH TO SUBGRADE AND PIPE TRENCHING NOT ACCOUNTED FOR			

ESTIMATE OF SEWER QTY'S		
ITEM	QTY	UNITS
12" FPVC PIPE	1,568	LF
4" PVC SEWER	43	LF
6" PVC SEWER	32	LF
8" PVC SEWER	16	LF
48" MANHOLE	10	EA
CLEANOUT	3	EA

NO	BY	DATE	REVISIONS	DATE	APP.

Registered Professional Engineer
49108 KRISHAN GEVINDA GINIGE 10/31/25 DATE SIGNED ARIZONA, U.S.A.

PREPARED BY:
DESIGNED BY:
DRAWN BY: NMW
CHECKED BY: KG
DATE 10/31/25
SCALE: AS SHOWN
JOB NO. 19-1101CE

TITLE: ALT SEWER SITE MAP, SURVEY CONTROL

JOB: JEROME WWTP GRADING & UTILITIES PLANS

YAVAPAI COUNTY AZ

PREPARED BY:
SOUTHWESTERN ENVIRONMENTAL CONSULTANTS, INC
825 COVE PARKWAY
COTTONWOOD, AZ 86326
928-282-7787

SHEET
C4.0
20 OF 99 SHEETS

JOB NO. 19-1101CE

© 2025, SEC, Inc., All Rights Reserved. This document is protected under the United States Copyright Act. No part may be reproduced in any form or by any means or stored in a database or retrieval system, without the prior written permission of SEC, Inc. These plans/documents could contain unintentional technical inaccuracies, typographical errors or omissions. Users of these plans/documents should understand that it is highly probable that errors and omissions will occur in any plan/document preparation process. However, plans/documents are prepared using technical knowledge that would be applied by other qualified registrants who practice this same profession in the same area and at the same time. Efforts have been made to be as accurate as possible.

S:\LAND PROJECTS 2004 ENGINEERING\19-1101CE JEROME WWTP\DWG\C3D\PLANS\XBSAN-ALT-19-1101CE.DWG

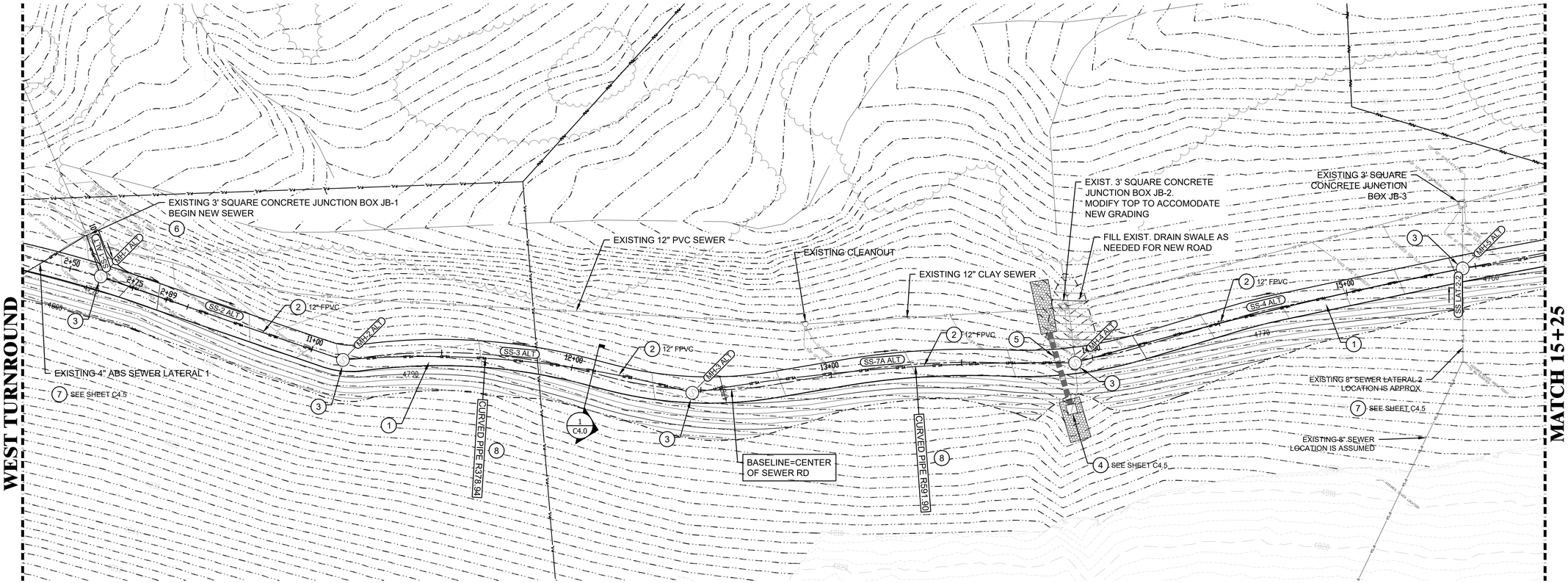

SEWER CALLOUTS. SEE CONSTRUCTION NOTES ON SHEET C4.0	
1	EXCAVATE SEWER CONSTRUCTION ROAD PER DETAIL 1, SHEET C4.0
2	INSTALL SEWER PIPE. SIZE AND TYPE PER PLAN. SEE NOTE 5, SHEET C4.0
3	INSTALL 48" SEWER MANHOLE PER MSD 420-1
4	INSTALL CATCH BASIN. SEE SHEET C4.5
5	INSTALL CULVERT. SEE SHEET C4.5
6	CONNECT NEW SEWER PIPE TO EXISTING JUNCTION BOX. CONTRACTOR TO PROVIDE DETAILS & SHOP DRAWINGS TO PROJECT ENGINEER FOR APPROVAL PRIOR TO CONNECTION.
7	PROTECT EXISTING SEWER LATERAL IN PLACE. CONNECT TO NEW SEWER WHEN ACTIVE. SEE PROFILES FOR DETAILS
8	INSTALL CURVED SEWER PIPE. RADIUS PER PLAN. SEE NOTE 5, SHEET C4.0.

CONSTRUCTION NOTES

1. THE EXISTING SEWER PIPES ARE VERY SHALLOW. EXTREME CAUTION IS REQUIRED TO ENSURE THE PIPES ARE PROTECTED DURING CONSTRUCTION. EXISTING SEWER TO REMAIN OPERATIONAL AT ALL TIMES UNTIL THE NEW SEWER IS ACTIVATED.
2. THE EXISTING LATERAL SEWERS SHALL BE TEMPORARILY RE-ROUTED AS NEEDED DURING CONSTRUCTION UNTIL THE NEW SEWER IS ACTIVATED.
3. WASTE MATERIAL FROM THE SEWER AND ROAD CONSTRUCTION SHALL BE REMOVED FROM PRIVATELY OWNED PROPERTIES.
4. CUT SLOPES STEEPER THAN 2:1 SHOULD BE EVALUATED AND APPROVED BY GEOTECHNICAL ENGINEER.
5. ALL TEMPORARY AND NEW SEWER PIPES AND STRUCTURES SHALL BE INSTALLED PER THE SPECIFICATIONS PROVIDED BY THE SEWER PLANT ENGINEER.
6. NEW EASEMENTS ARE NEEDED FOR BOTH EXISTING AND PROPOSED SEWER ACROSS PRIVATE LAND. TO BE COORDINATED BY THE TOWN.

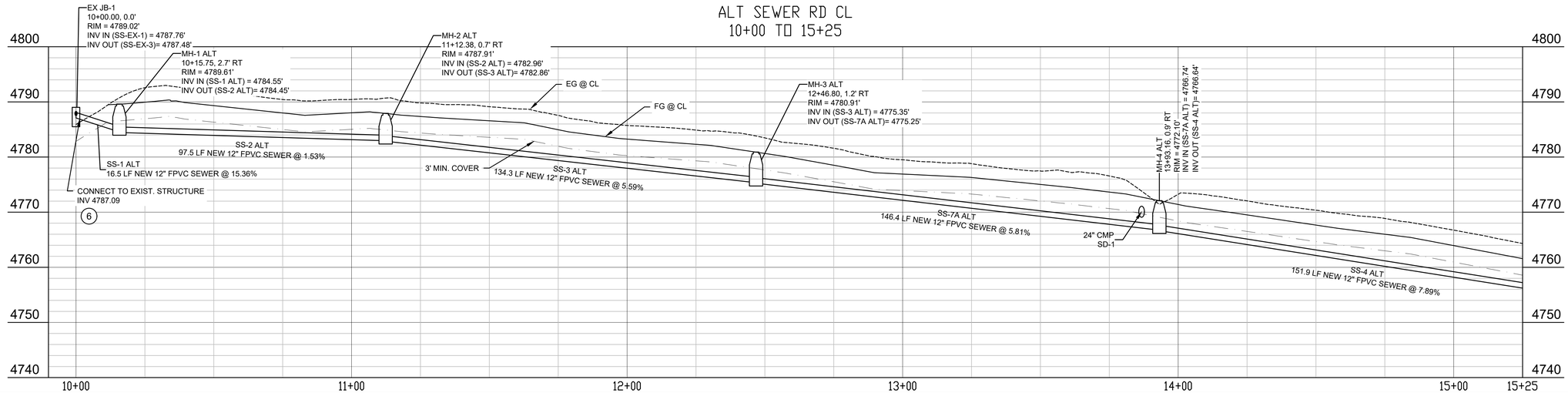

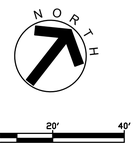

S:\LAND PROJECTS 2004 ENGINEERING\19-1101CE JEROME WWTP\DWG\C3D\PLANS\XBSAN-ALT-19-1101CE.DWG

NO	BY	DATE	REVISIONS	DATE	APP.



PREPARED BY:
DESIGNED BY:
DRAWN BY: NMW
CHECKED BY: KG
SCALE: AS SHOWN
DATE 10/31/25
JOB NO. 19-1101CE

TITLE *ALT SEWER P&P 10+00 TO 15+25*

JOB *JEROME WWTP GRADING & UTILITIES PLANS*

YAVAPAI COUNTY AZ

PREPARED BY:

SOUTHWESTERN ENVIRONMENTAL CONSULTANTS, INC
825 COVE PARKWAY
COTTONWOOD, AZ 86326
928-282-7787

SHEET
C4.1
21 OF 99 SHEETS

JOB NO. 19-1101CE

© 2025, SEC, Inc., All Rights Reserved. This document is protected under the United States Copyright Act. No part may be reproduced in any form or by any means or stored in a database or retrieval system, without the prior written permission of SEC, Inc. These plans/documents have been prepared using technical knowledge that would be applied by other qualified registrants who practice the same profession in the same area and at the same time. Efforts have been made to be as accurate as possible. However, plans/documents could contain unintentional technical inaccuracies, typographical errors or omissions. Users of these plans/documents should understand that it is highly probable that errors and omissions will occur in any plan/document preparation process.

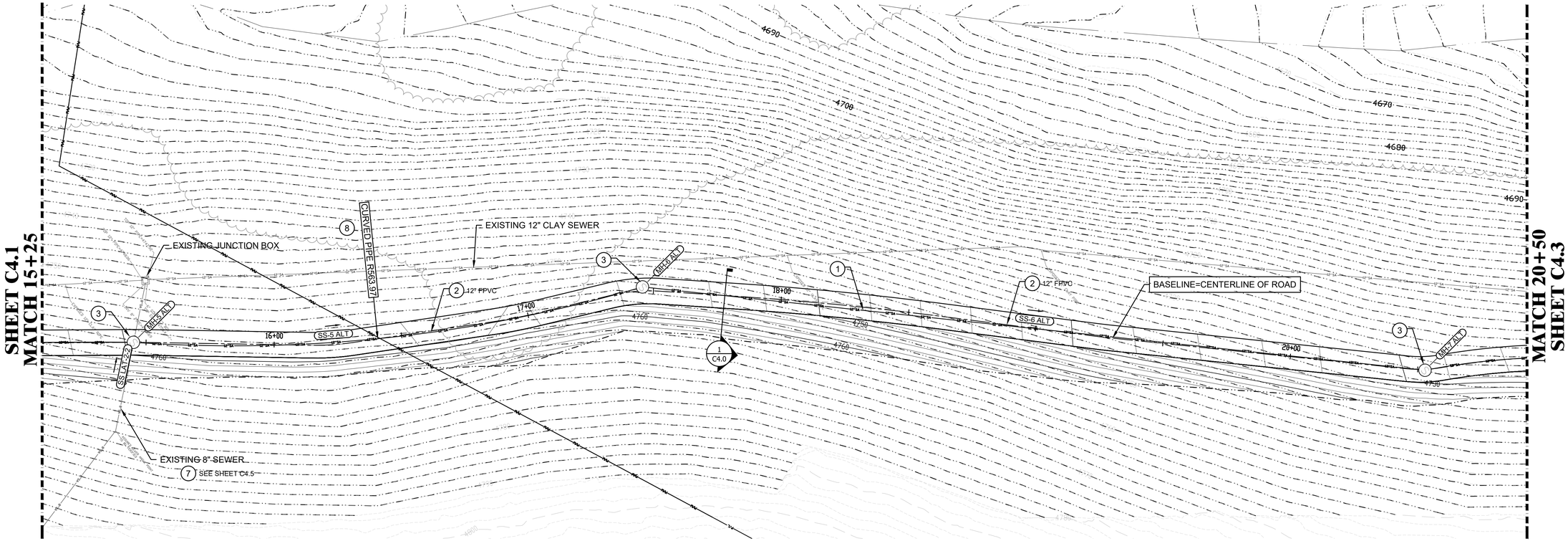

SEWER CALLOUTS. SEE CONSTRUCTION NOTES ON SHEET C4.0	
1	EXCAVATE SEWER CONSTRUCTION ROAD PER DETAIL 1, SHEET C4.0
2	INSTALL SEWER PIPE. SIZE AND TYPE PER PLAN. SEE NOTE 5, SHEET C4.0
3	INSTALL 48" SEWER MANHOLE PER MSD 420-1
4	INSTALL CATCH BASIN. SEE SHEET C4.5
5	INSTALL CULVERT. SEE SHEET C4.5
6	CONNECT NEW SEWER PIPE TO EXISTING JUNCTION BOX. CONTRACTOR TO PROVIDE DETAILS & SHOP DRAWINGS TO PROJECT ENGINEER FOR APPROVAL PRIOR TO CONNECTION.
7	PROTECT EXISTING SEWER LATERAL IN PLACE. CONNECT TO NEW SEWER WHEN ACTIVE. SEE PROFILES FOR DETAILS
8	INSTALL CURVED SEWER PIPE. RADIUS PER PLAN. SEE NOTE 5, SHEET C4.0.

CONSTRUCTION NOTES

1. THE EXISTING SEWER PIPES ARE VERY SHALLOW. EXTREME CAUTION IS REQUIRED TO ENSURE THE PIPES ARE PROTECTED DURING CONSTRUCTION. EXISTING SEWER TO REMAIN OPERATIONAL AT ALL TIMES UNTIL THE NEW SEWER IS ACTIVATED.
2. THE EXISTING LATERAL SEWERS SHALL BE TEMPORARILY RE-ROUTED AS NEEDED DURING CONSTRUCTION UNTIL THE NEW SEWER IS ACTIVATED.
3. WASTE MATERIAL FROM THE SEWER AND ROAD CONSTRUCTION SHALL BE REMOVED FROM PRIVATELY OWNED PROPERTIES.
4. CUT SLOPES STEEPER THAN 2:1 SHOULD BE EVALUATED AND APPROVED BY GEOTECHNICAL ENGINEER.
5. ALL TEMPORARY AND NEW SEWER PIPES AND STRUCTURES SHALL BE INSTALLED PER THE SPECIFICATIONS PROVIDED BY THE SEWER PLANT ENGINEER.
6. NEW EASEMENTS ARE NEEDED FOR BOTH EXISTING AND PROPOSED SEWER ACROSS PRIVATE LAND. TO BE COORDINATED BY THE TOWN.

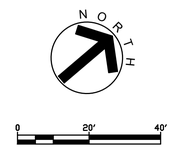

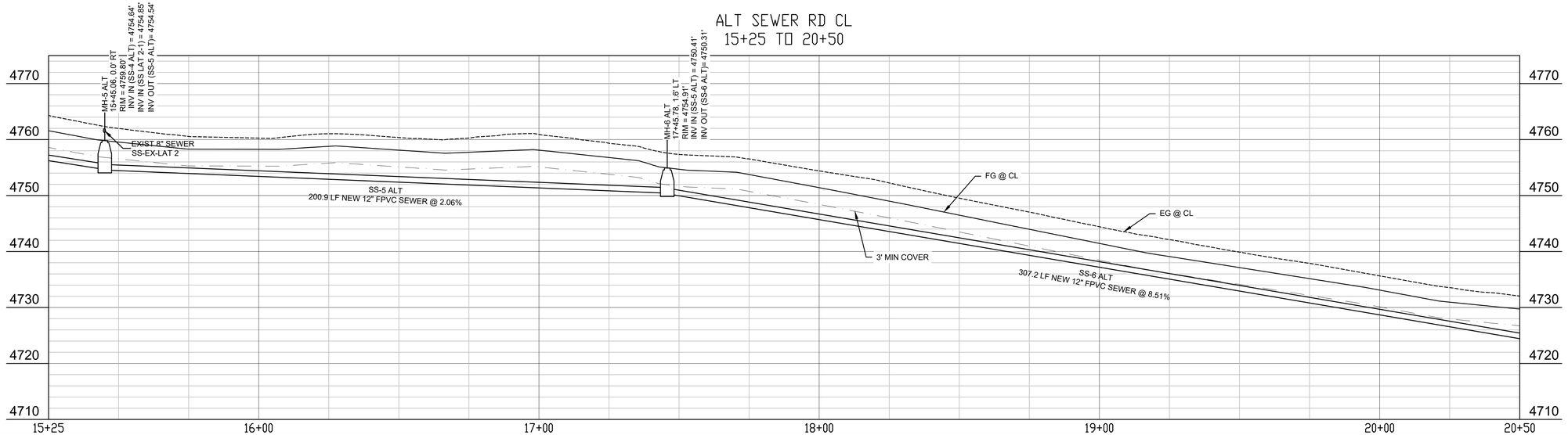

PREPARED BY:
DESIGNED BY:
DRAWN BY: NMW
CHECKED BY: KG
DATE 10/31/25
JOB NO. 19-1101CE
SCALE: AS SHOWN

NO	BY	DATE	REVISIONS	DATE	APP.

49108
KRISHAN GEVINDA GINIGE
10/31/25
REGISTERED PROFESSIONAL ENGINEER
ARIZONA, U.S.A.

TITLE
ALT SEWER P&P 15+25 TO 20+50

JOB
JEROME WWTP
GRADING & UTILITIES PLANS
YAVAPAI COUNTY AZ

PREPARED BY:
SEC Inc.
SOUTHWESTERN ENVIRONMENTAL CONSULTANTS, INC
825 COVE PARKWAY
COTTONWOOD, AZ 86326
928-282-7787

SHEET
C4.2
22 OF 99 SHEETS

JOB NO. 19-1101CE

© 2025, SEC, Inc., All Rights Reserved. This document is protected under the United States Copyright Act. No part may be reproduced in any form or by any means or stored in a database or retrieval system, without the prior written permission of SEC, Inc. These plans/documents have been prepared using technical knowledge that would be applied by other qualified registrants who practice the same profession in the same area and at the same time. Efforts have been made to be as accurate as possible. However, plans/documents could contain unintentional technical inaccuracies, typographical errors or omissions. Users of these plans/documents should understand that it is highly probable that errors and omissions will occur in any plan/document preparation process.

S:\LAND PROJECTS 2004 ENGINEERING\19-1101CE JEROME WWTP\DWG\C3D\PLANS\XBSAN-ALT-19-1101CE.DWG

SHEET C4.2
MATCH 20+50

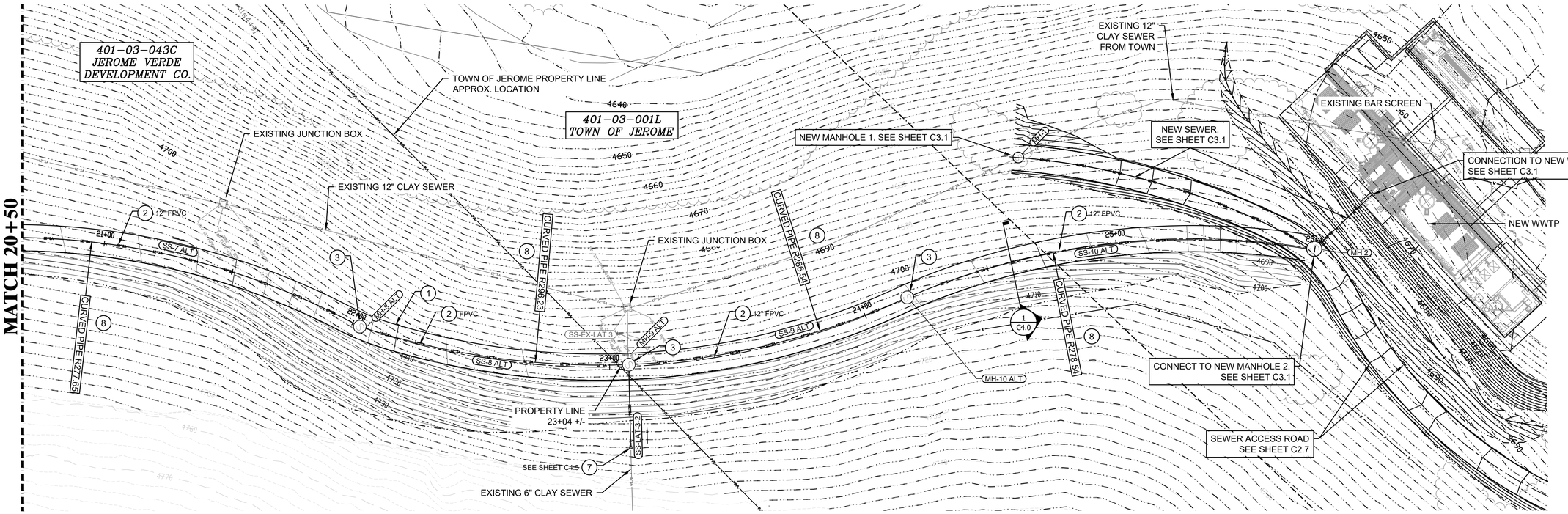

SEWER CALLOUTS. SEE CONSTRUCTION NOTES ON SHEET C4.0	
1	EXCAVATE SEWER CONSTRUCTION ROAD PER DETAIL 1, SHEET C4.0
2	INSTALL SEWER PIPE. SIZE AND TYPE PER PLAN. SEE NOTE 5, SHEET C4.0
3	INSTALL 48" SEWER MANHOLE PER MSD 420-1
4	INSTALL CATCH BASIN. SEE SHEET C4.5
5	INSTALL CULVERT. SEE SHEET C4.5
6	CONNECT NEW SEWER PIPE TO EXISTING JUNCTION BOX. CONTRACTOR TO PROVIDE DETAILS & SHOP DRAWINGS TO PROJECT ENGINEER FOR APPROVAL PRIOR TO CONNECTION.
7	PROTECT EXISTING SEWER LATERAL IN PLACE. CONNECT TO NEW SEWER WHEN ACTIVE. SEE PROFILES FOR DETAILS
8	INSTALL CURVED SEWER PIPE. RADIUS PER PLAN. SEE NOTE 5, SHEET C4.0.

CONSTRUCTION NOTES

1. THE EXISTING SEWER PIPES ARE VERY SHALLOW. EXTREME CAUTION IS REQUIRED TO ENSURE THE PIPES ARE PROTECTED DURING CONSTRUCTION. EXISTING SEWER TO REMAIN OPERATIONAL AT ALL TIMES UNTIL THE NEW SEWER IS ACTIVATED.
2. THE EXISTING LATERAL SEWERS SHALL BE TEMPORARILY RE-ROUTED AS NEEDED DURING CONSTRUCTION UNTIL THE NEW SEWER IS ACTIVATED.
3. WASTE MATERIAL FROM THE SEWER AND ROAD CONSTRUCTION SHALL BE REMOVED FROM PRIVATELY OWNED PROPERTIES.
4. CUT SLOPES STEEPER THAN 2:1 SHOULD BE EVALUATED AND APPROVED BY GEOTECHNICAL ENGINEER.
5. ALL TEMPORARY AND NEW SEWER PIPES AND STRUCTURES SHALL BE INSTALLED PER THE SPECIFICATIONS PROVIDED BY THE SEWER PLANT ENGINEER.
6. NEW EASEMENTS ARE NEEDED FOR BOTH EXISTING AND PROPOSED SEWER ACROSS PRIVATE LAND. TO BE COORDINATED BY THE TOWN.

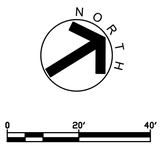

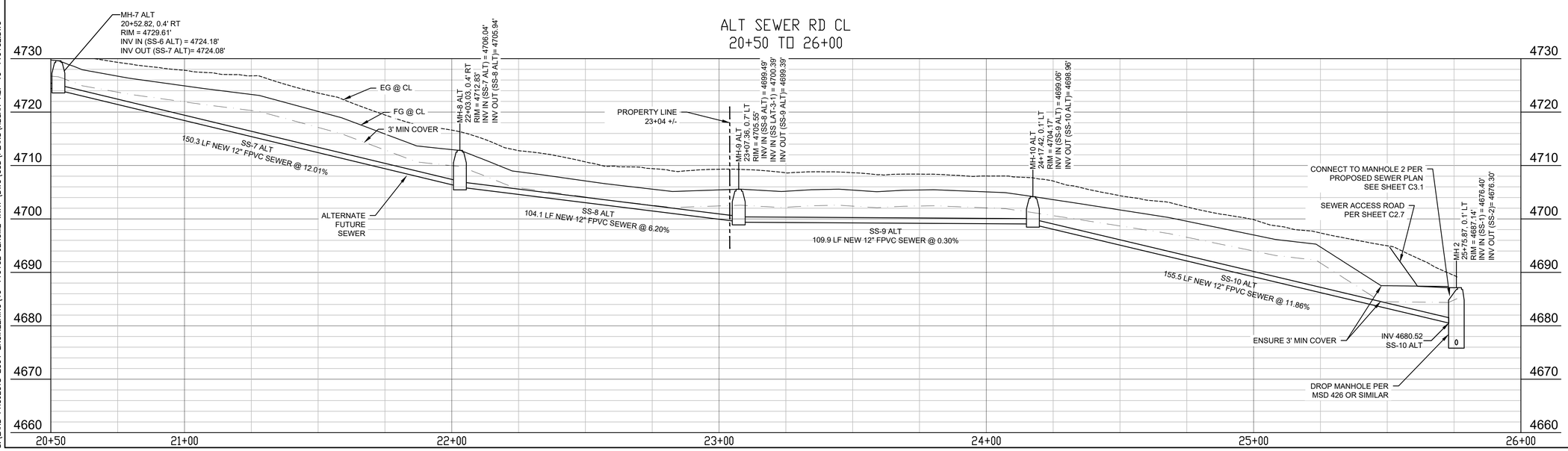

NO	BY	DATE	REVISIONS	DATE	APP.

PREPARED BY:
DESIGNED BY:
DRAWN BY: NMW
CHECKED BY: KG
DATE 10/31/25
JOB NO. 19-1101CE
SCALE: AS SHOWN

49108
KRISHAN
GEVINDA
GINIGE
10/31/25
REGISTERED PROFESSIONAL ENGINEER
ARIZONA, U.S.A.

TITLE
ALT SEWER P&P 20+50 TO 26+00

JOB
JEROME WWTP
GRADING & UTILITIES PLANS
YAVAPAI COUNTY AZ

PREPARED BY:
SEC Inc.
SOUTHWESTERN ENVIRONMENTAL CONSULTANTS, INC
825 COVE PARKWAY
COTTONWOOD, AZ 86326
928-282-7787

SHEET
C4.3
23 OF 99 SHEETS

JOB NO. 19-1101CE

© 2025 SEC, Inc., All Rights Reserved. This document is protected under the United States Copyright Act. No part may be reproduced in any form or by any means or stored in a database or retrieval system, without the prior written permission of SEC, Inc. These plans/documents have been prepared using technical knowledge that would be applied by other qualified registrants who practice the same profession in the same area and at the same time. Efforts have been made to be as accurate as possible. However, plans/documents could contain unintentional technical inaccuracies, typographical errors or omissions. Users of these plans/documents should understand that it is highly probable that errors and omissions will occur in any plan/document preparation process.

S:\LAND PROJECTS 2004 ENGINEERING\19-1101CE JEROME WWTP\DWG\C3D\PLANS\XBSAN-ALT-19-1101CE.DWG

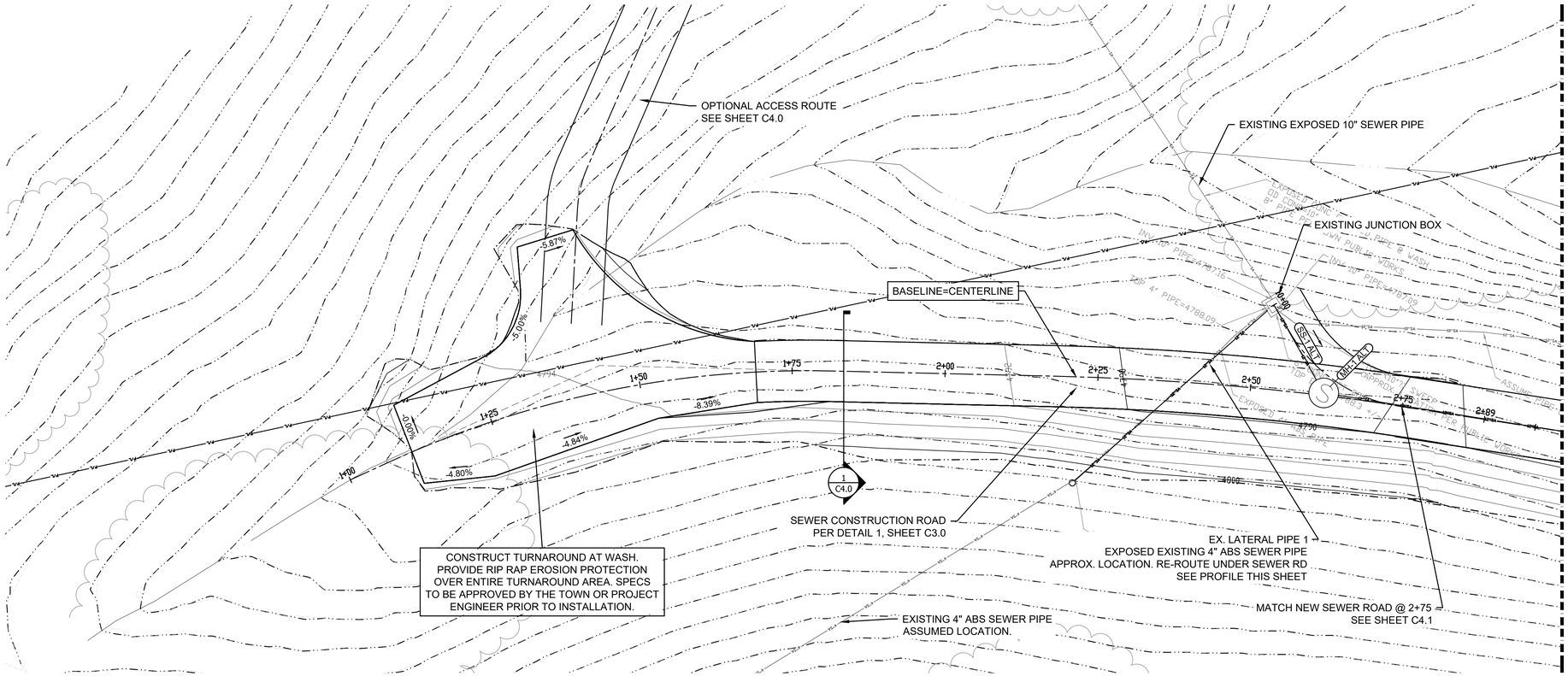
OPTIONAL ACCESS ROUTE
SEE SHEET C4.0
EXISTING EXPOSED 10" SEWER PIPE
EXISTING JUNCTION BOX
BASELINE=CENTERLINE
MATCH SEWER ROAD
SEE SHEET C4.1
-5.87%
-5.00%
-8.39%
-4.84%
-4.80%
-4.00%
1+00
1+25
1+50
1+75
2+00
2+25
2+50
2+75
2+89
4794
4792
4790
4788
4786
4784
4782
4780
4778
4776
4774
4772
4770
4768
4766
4764
4762
4760
4758
4756
4754
4752
4750
4748
4746
4744
4742
4740
4738
4736
4734
4732
4730
4728
4726
4724
4722
4720
4718
4716
4714
4712
4710
4708
4706
4704
4702
4700
4698
4696
4694
4692
4690
4688
4686
4684
4682
4680
4678
4676
4674
4672
4670
4668
4666
4664
4662
4660
4658
4656
4654
4652
4650
4648
4646
4644
4642
4640
4638
4636
4634
4632
4630
4628
4626
4624
4622
4620
4618
4616
4614
4612
4610
4608
4606
4604
4602
4600
4598
4596
4594
4592
4590
4588
4586
4584
4582
4580
4578
4576
4574
4572
4570
4568
4566
4564
4562
4560
4558
4556
4554
4552
4550
4548
4546
4544
4542
4540
4538
4536
4534
4532
4530
4528
4526
4524
4522
4520
4518
4516
4514
4512
4510
4508
4506
4504
4502
4500
4498
4496
4494
4492
4490
4488
4486
4484
4482
4480
4478
4476
4474
4472
4470
4468
4466
4464
4462
4460
4458
4456
4454
4452
4450
4448
4446
4444
4442
4440
4438
4436
4434
4432
4430
4428
4426
4424
4422
4420
4418
4416
4414
4412
4410
4408
4406
4404
4402
4400
4398
4396
4394
4392
4390
4388
4386
4384
4382
4380
4378
4376
4374
4372
4370
4368
4366
4364
4362
4360
4358
4356
4354
4352
4350
4348
4346
4344
4342
4340
4338
4336
4334
4332
4330
4328
4326
4324
4322
4320
4318
4316
4314
4312
4310
4308
4306
4304
4302
4300
4298
4296
4294
4292
4290
4288
4286
4284
4282
4280
4278
4276
4274
4272
4270
4268
4266
4264
4262
4260
4258
4256
4254
4252
4250
4248
4246
4244
4242
4240
4238
4236
4234
4232
4230
4228
4226
4224
4222
4220
4218
4216
4214
4212
4210
4208
4206
4204
4202
4200
4198
4196
4194
4192
4190
4188
4186
4184
4182
4180
4178
4176
4174
4172
4170
4168
4166
4164
4162
4160
4158
4156
4154
4152
4150
4148
4146
4144
4142
4140
4138
4136
4134
4132
4130
4128
4126
4124
4122
4120
4118
4116
4114
4112
4110
4108
4106
4104
4102
4100
4098
4096
4094
4092
4090
4088
4086
4084
4082
4080
4078
4076
4074
4072
4070
4068
4066
4064
4062
4060
4058
4056
4054
4052
4050
4048
4046
4044
4042
4040
4038
4036
4034
4032
4030
4028
4026
4024
4022
4020
4018
4016
4014
4012
4010
4008
4006
4004
4002
4000
3998
3996
3994
3992
3990
3988
3986
3984
3982
3980
3978
3976
3974
3972
3970
3968
3966
3964
3962
3960
3958
3956
3954
3952
3950
3948
3946
3944
3942
3940
3938
3936
3934
3932
3930
3928
3926
3924
3922
3920
3918
3916
3914
3912
3910
3908
3906
3904
3902
3900
3898
3896
3894
3892
3890
3888
3886
3884
3882
3880
3878
3876
3874
3872
3870
3868
3866
3864
3862
3860
3858
3856
3854
3852
3850
3848
3846
3844
3842
3840
3838
3836
3834
3832
3830
3828
3826
3824
3822
3820
3818
3816
3814
3812
3810
3808
3806
3804
3802
3800
3798
3796
3794
3792
3790
3788
3786
3784
3782
3780
3778
3776
3774
3772
3770
3768
3766
3764
3762
3760
3758
3756
3754
3752
3750
3748
3746
3744
3742
3740
3738
3736
3734
3732
3730
3728
3726
3724
3722
3720
3718
3716
3714
3712
3710
3708
3706
3704
3702
3700
3698
3696
3694
3692
3690
3688
3686
3684
3682
3680
3678
3676
3674
3672
3670
3668
3666
3664
3662
3660
3658
3656
3654
3652
3650
3648
3646
3644
3642
3640
3638
3636
3634
3632
3630
3628
3626
3624
3622
3620
3618
3616
3614
3612
3610
3608
3606
3604
3602
3600
3598
3596
3594
3592
3590
3588
3586
3584
3582
3580
3578
3576
3574
3572
3570
3568
3566
3564
3562
3560
3558
3556
3554
3552
3550
3548
3546
3544
3542
3540
3538
3536
3534
3532
3530
3528
3526
3524
3522
3520
3518
3516
3514
3512
3510
3508
3506
3504
3502
3500
3498
3496
3494
3492
3490
3488
3486
3484
3482
3480
3478
3476
3474
3472
3470
3468
3466
3464
3462
3460
3458
3456
3454
3452
3450
3448
3446
3444
3442
3440
3438
3436
3434
3432
3430
3428
3426
3424
3422
3420
3418
3416
3414
3412
3410
3408
3406
3404
3402
3400
3398
3396
3394
3392
3390
3388
3386
3384
3382
3380
3378
3376
3374
3372
3370
3368
3366
3364
3362
3360
3358
3356
3354
3352
3350
3348
3346
3344
3342
3340
3338
3336
3334
3332
3330
3328
3326
3324
3322
3320
3318
3316
3314
3312
3310
3308
3306
3304
3302
3300
3298
3296
3294
3292
3290
3288
3286
3284
3282
3280
3278
3276
3274
3272
3270
3268
3266
3264
3262
3260
3258
3256
3254
3252
3250
3248
3246
3244
3242
3240
3238
3236
3234
3232
3230
3228
3226
3224
3222
3220
3218
3216
3214
3212
3210
3208
3206
3204
3202
3200
3198
3196
3194
3192
3190
3188
3186
3184
3182
3180
3178
3176
3174
3172
3170
3168
3166
3164
3162
3160
3158
3156
3154
3152
3150
3148
3146
3144
3142
3140
3138
3136
3134
3132
3130
3128
3126
3124
3122
3120
3118
3116
3114
3112
3110
3108
3106
3104
3102
3100
3098
3096
3094
3092
3090
3088
3086
3084
3082
3080
3078
3076
3074
3072
3070
3068
3066
3064
3062
3060
3058
3056
3054
3052
3050
3048
3046
3044
3042
3040
3038
3036
3034
3032
3030
3028
3026
3024
3022
3020
3018
3016
3014
3012
3010
3008
3006
3004
3002
3000
2998
2996
2994
2992
2990
2988
2986
2984
2982
2980
2978
2976
2974
2972
2970
2968
2966
2964
2962
2960
2958
2956
2954
2952
2950
2948
2946
2944
2942
2940
2938
2936
2934
2932
2930
2928
2926
2924
2922
2920
2918
2916
2914
2912
2910
2908
2906
2904
2902
2900
2898
2896
2894
2892
2890
2888
2886
2884
2882
2880
2878
2876
2874
2872
2870
2868
2866
2864
2862
2860
2858
2856
2854
2852
2850
2848
2846
2844
2842
2840
2838
2836
2834
2832
2830
2828
2826
2824
2822
2820
2818
2816
2814
2812
2810
2808
2806
2804
2802
2800
2798
2796
2794
2792
2790
2788
2786
2784
2782
2780
2778
2776
2774
2772
2770
2768
2766
2764
2762
2760
2758
2756
2754
2752
2750
2748
2746
2744
2742
2740
2738
2736
2734
2732
2730
2728
2726
2724
2722
2720
2718
2716
2714
2712
2710
2708
2706
2704
2702
2700
2698
2696
2694
2692
2690
2688
2686
2684
2682
2680
2678
2676
2674
2672
2670
2668
2666
2664
2662
2660
2658
2656
2654
2652
2650
2648
2646
2644
2642
2640
2638
2636
2634
2632
2630
2628
2626
2624
2622
2620
2618
2616
2614
2612
2610
2608
2606
2604
2602
2600
2598
2596
2594
2592
2590
2588
2586
2584
2582
2580
2578
2576
2574
2572
2570
2568
2566
2564
2562
2560
2558
2556
2554
2552
2550
2548
2546
2544
2542
2540
2538
2536
2534
2532
2530
2528
2526
2524
2522
2520
2518
2516
2514
2512
2510
2508
2506
2504
2502
2500
2498
2496
2494
2492
2490
2488
2486
2484
2482
2480
2478
2476
2474
2472
2470
2468
2466
2464
2462
2460
2458
2456
2454
2452
2450
2448
2446
2444
2442
2440
2438
2436
2434
2432
2430
2428
2426
2424
2422
2420
2418
2416
2414
2412
2410
2408
2406
2404
2402
2400
2398
2396
2394
2392
2390
2388
2386
2384
2382
2380
2378
2376
2374
2372
2370
2368
2366
2364
2362
2360
2358
2356
2354
2352
2350
2348
2346
2344
2342
2340
2338
2336
2334
2332
2330
2328
2326
2324
2322
2320
2318
2316
2314
2312
2310
2308
2306
2304
2302
2300
2298
2296
2294
2292
2290
2288
2286
2284
2282
2280
2278
2276
2274
2272
2270
2268
2266
2264
2262
2260
2258
2256
2254
2252
2250
2248
2246
2244
2242
2240
2238
2236
2234
2232
2230
2228
2226
2224
2222
2220
2218
2216
2214
2212
2210
2208
2206
2204
2202
2200
2198
2196
2194
2192
2190
2188
2186
2184
2182
2180
2178
2176
2174
2172
2170
2168
2166
2164
2162
2160
2158
2156
2154
2152
2150
2148
2146
2144
2142
2140
2138
2136
2134
2132
2130
2128
2126
2124
2122
2120
2118
2116
2114
2112
2110
2108
2106
2104
2102
2100
2098
2096
2094
2092
2090
2088
2086
2084
2082
2080
2078
2076
2074
2072
2070
2068
2066
2064
2062
2060
2058
2056
2054
2052
2050
2048
2046
2044
2042
2040
2038
2036
2034
2032
2030
2028
2026
2024
2022
2020
2018
2016
2014
2012
2010
2008
2006
2004
2002
2000
1998
1996
1994
1992
1990
1988
1986
1984
1982
1980
1978
1976
1974
1972
1970
1968
1966
1964
1962
1960
1958
1956
1954
1952
1950
1948
1946
1944
1942
1940
1938
1936
1934
1932
1930
1928
1926
1924
1922
1920
1918
1916
1914
1912
1910
1908
1906
1904
1902
1900
1898
1896
1894
1892
1890
1888
1886
1884
1882
1880
1878
1876
1874
1872
1870
1868
1866
1864
1862
1860
1858
1856
1854
1852
1850
1848
1846
1844
1842
1840
1838
1836
1834
1832
1830
1828
1826
1824
1822
1820
1818
1816
1814
1812
1810
1808
1806
1804
1802
1800
1798
1796
1794
1792
1790
1788
1786
1784
1782
1780
1778
1776
1774
1772
1770
1768
1766
1764
1762
1760
1758
1756
1754
1752
1750
1748
1746
1744
1742
1740
1738
1736
1734
1732
1730
1728
1726
1724
1722
1720
1718
1716
1714
1712
1710
1708
1706
1704
1702
1700
1698
1696
1694
1692
1690
1688
1686
1684
1682
1680
1678
1676
1674
1672
1670
1668
1666
1664
1662
1660
1658
1656
1654
1652
1650
1648
1646
1644
1642
1640
1638
1636
1634
1632
1630
1628
1626
1624
1622
1620
1618
1616
1614
1612
1610
1608
1606
1604
1602
1600
1598
1596
1594
1592
1590
1588
1586
1584
1582
1580
1578
1576
1574
1572
1570
1568
1566
1564
1562
1560
1558
1556
1554
1552
1550
1548
1546
1544
1542
1540
1538
1536
1534
1532
1530
1528
1526
1524
1522
1520
1518
1516
1514
1512
1510
1508
1506
1504
1502
1500
1498
1496
1494
1492
1490
1488
1486
1484
1482
1480
1478
1476
1474
1472
1470
1468
1466
1464
1462
1460
1458
1456
1454
1452
1450
1448
1446
1444
1442
1440
1438
1436
1434
1432
1430
1428
1426
1424
1422
1420
1418
1416
1414
1412
1410
1408
1406
1404
1402
1400
1398
1396
1394
1392
1390
1388
1386
1384
1382
1380
1378
1376
1374
1372
1370
1368
1366
1364
1362
1360
1358
1356
1354
1352
1350
1348
1346
1344
1342
1340
1338
1336
1334
1332
1330
1328
1326
1324
1322
1320
1318
1316
1314
1312
1310
1308
1306
1304
1302
1300
1298
1296
1294
1292
1290
1288
1286
1284
1282
1280
1278
1276
1274
1272
1270
1268
1266
1264
1262
1260
1258
1256
1254
1252
1250
1248
1246
1244
1242
1240
1238
1236
1234
1232
1230
1228
1226
1224
1222
1220
1218
1216
1214
1212
1210
1208
1206
1204
1202
1200
1198
1196
1194
1192
1190
1188
1186
1184
1182
1180
1178
1176
1174
1172
1170
1168
1166
1164
1162
1160
1158
1156
1154
1152
1150
1148
1146
1144
1142
1140
1138
1136
1134
1132
1130
1128
1126
1124
1122
1120
1118
1116
1114
1112
1110
1108
1106
1104
1102
1100
1098
1096
1094
1092
1090
1088
1086
1084
1082
1080
1078
1076
1074
1072
1070
1068
1066
1064
1062
1060
1058
1056
1054
1052
1050
1048
1046
1044
1042
1040
1038
1036
1034
1032
1030
1028
1026
1024
1022
1020
1018
1016
1014
1012
1010
1008
1006
1004
1002
1000
998
996
994
992
990
988
986
984
982
980
978
976
974
972
970
968
966
964
962
960
958
956
954
952
950
948
946
944
942
940
938
936
934
932
930
928
926
924
922
920
918
916
914
912
910
908
906
904
902
900
898
896
894
892
890
888
886
884
882
880
878
876
874
872
870
868
866
864
862
860
858
856
854
852
850
848
846
844
842
840
838
836
834
832
830
828
826
824
822
820
818
816
814
812
810
808
806
804
802
800
798
796
794
792
790
788
786
784
782
780
778
776
774
772
770
768
766
764
762
760
758
756
754
752
750
748
746
744
742
740
738
736
734
732
730
728
726
724
722
720
718
716
714
712
710
708
706
704
702
700
698
696
694
692
690
688
686
684
682
680
678
676
674
672
670
668
666
664
662
660
658
656
654
652
650
648
646
644
642
640
638
636
634
632
630
628
626
624
622
620
618
616
614
612
610
608
606
604
602
600
598
596
594
592
590
588
586
584
582
580
578
576
574
572
570
568
566
564
562
560
558
556
554
552
550
548
546
544
542
540
538
536
534
532
530
528
526
524
522
520
518
516
514
512
510
508
506
504
502
500
498
496
494
492
490
488
486
484
482
480
478
476
474
472
470
468
466
464
462
460
458
456
454
452
450
448
446
444
442
440
438
436
434
432
430
428
426
424
422
420
418
416
414
412
410
408
406
404
402
400
398
396
394
392
390
388
386
384
382
380
378
376
374
372
370
368
366
364
362
360
358
356
354
352
350
348
346
344
342
340
338
336
334
332
330
328
326
324
322
320
318
316
314
312
310
308
306
304
302
300
298
296
294
292
290
288
286
284
282
280
278
276
274
272
270
268
266
264
262
260
258
256
254
252
250
248
246
244
242
240
238
236
234
232
230
228
226
224
222
220
218
216
214
212
210
208
206
204
202
200
198
196
194
192
190
188
186
184
182
180
178
176
174
172
170
168
166
164
162
160
158
156
154
152
150
148
146
144
142
140
138
136
134
132
130
128
126
124
122
120
118
116
114
112
110
108
106
104
102
100
98
96
94
92
90
88
86
84
82
80
78
76
74
72
70
68
66
64
62
60
58
56
54
52
50
48
46
44
42
40
38
36
34
32
30
28
26
24
22
20
18
16
14
12
10
8
6
4
2
0
-2
-4
-6
-8
-10
-12
-14
-16
-18
-20
-22
-24
-26
-28
-30
-32
-34
-36
-38
-40
-42
-44
-46
-48
-50
-52
-54
-56
-58
-60
-62
-64
-66
-68
-70
-72
-74
-76
-78
-80



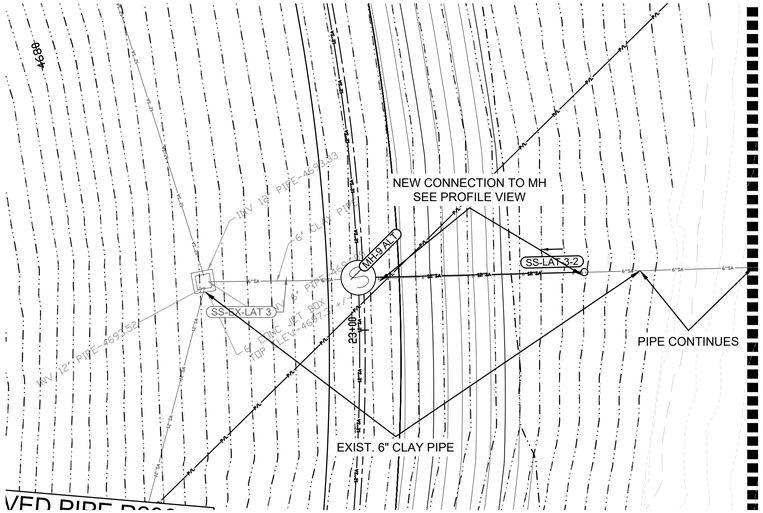

EXIST SEW LAT 3
0+00 TO 0+70

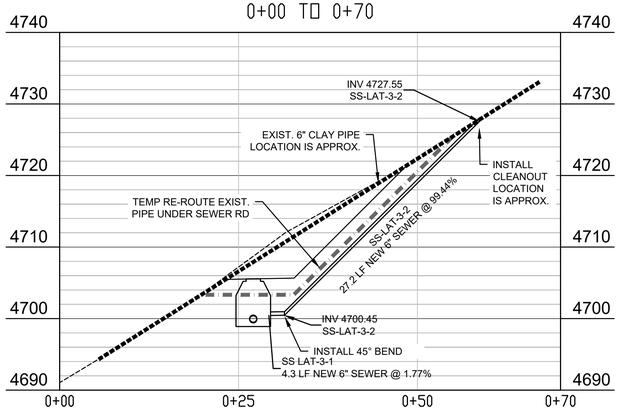

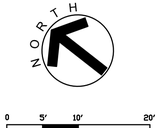

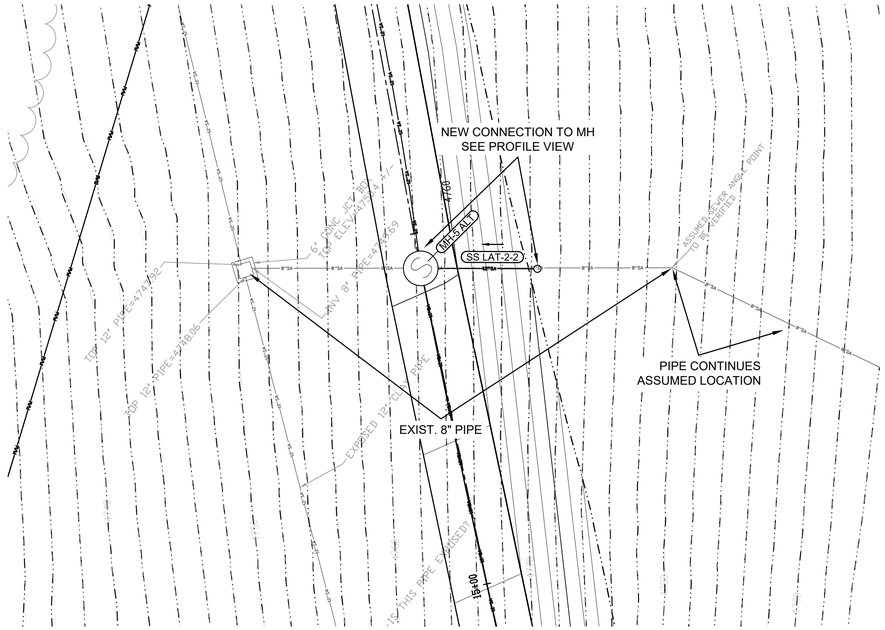

EX SEW LAT 2
0+00 TO 0+75

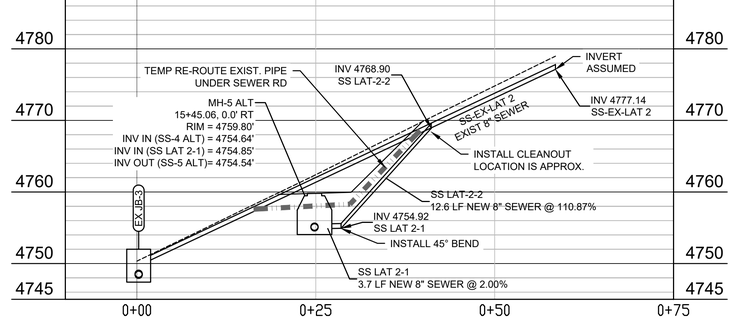

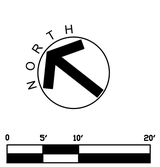

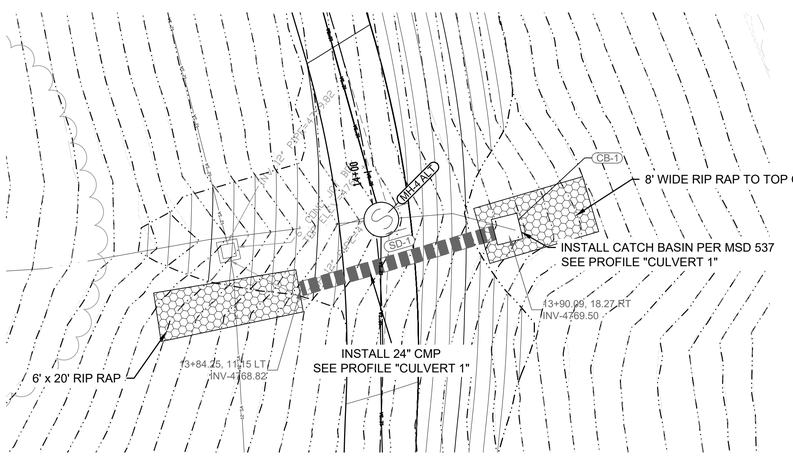

CULVERT 1
0+00 TO 0+75

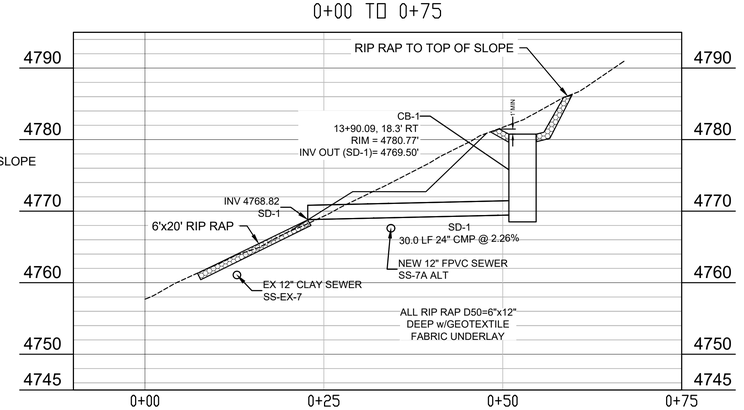

CONSTRUCTION NOTES

1. THE EXISTING SEWER PIPES ARE VERY SHALLOW. EXTREME CAUTION IS REQUIRED TO ENSURE THE PIPES ARE PROTECTED DURING CONSTRUCTION. EXISTING SEWER TO REMAIN OPERATIONAL AT ALL TIMES UNTIL THE NEW SEWER IS ACTIVATED.
2. THE EXISTING LATERAL SEWERS SHALL BE TEMPORARILY RE-ROUTED AS NEEDED DURING CONSTRUCTION UNTIL THE NEW SEWER IS ACTIVATED.
3. WASTE MATERIAL FROM THE SEWER AND ROAD CONSTRUCTION SHALL BE REMOVED FROM PRIVATELY OWNED PROPERTIES.
4. CUT SLOPES STEEPER THAN 2:1 SHOULD BE EVALUATED AND APPROVED BY GEOTECHNICAL ENGINEER.
5. ALL TEMPORARY AND NEW SEWER PIPES AND STRUCTURES SHALL BE INSTALLED PER THE SPECIFICATIONS PROVIDED BY THE SEWER PLANT ENGINEER.
6. NEW EASEMENTS ARE NEEDED FOR BOTH EXISTING AND PROPOSED SEWER ACROSS PRIVATE LAND. TO BE COORDINATED BY THE TOWN.

NO	BY	DATE	REVISIONS	DATE	APP.



PREPARED BY:
DESIGNED BY:
DRAWN BY: NMW
CHECKED BY: KG
SCALE: AS SHOWN
DATE 10/31/25
JOB NO. 19-1101CE

TITLE
ALT SEWER LATERAL PROFILES

JOB
JEROME WWTP
GRADING & UTILITIES PLANS
YAVAPAI COUNTY AZ

PREPARED BY:
SEC Inc.
SOUTHWESTERN ENVIRONMENTAL CONSULTANTS, INC
825 COVE PARKWAY
COTTONWOOD, AZ 86326
928-282-7787

SHEET
C4.5
25 OF 99 SHEETS

JOB NO. 19-1101CE

© 2025, SEC, Inc., All Rights Reserved. This document is protected under the United States Copyright Act. No part may be reproduced in any form or by any means or stored in a database or retrieval system, without the prior written permission of SEC, Inc. These plans/documents have been prepared using technical knowledge that would be applied by other qualified registrants who practice the same profession in the same area and at the same time. Efforts have been made to be as accurate as possible. However, plans/documents could contain unintentional technical inaccuracies, typographical errors or omissions. Users of these plans/documents should understand that it is highly probable that errors and omissions will occur in any plan/document preparation process.

S:\LAND PROJECTS 2004 ENGINEERING\19-1101CE JEROME WWTP\DWG\C3D\PLANS\XBSAN-ALT-19-1101CE.DWG



EXISTING EQUIPMENT AND COMPONENTS

1. BAR SCREEN
2. 2" PVC POTABLE WATERLINE
3. STORAGE TANKS (ABANDONED)
4. PRIMARY SETTLING TANK
5. DOSING TANK A
6. TRICKLING FILTER (TYP.)
7. REED BEDS (TYP.)
8. DOSING TANK B
9. CONSTRUCTED WETLAND CELLS (TYP.)
10. LEVEL ADJUST SUMP (TYP.)
11. CHLORINE CONTACT CHAMBERS

EXISTING SITE PLAN

NORTH

40 20 0 40 80

100% ISSUED FOR BID

NO	BY	DATE	REVISIONS	DATE	APP.

Registered Professional Engineer (Civil) CERTIFICATE NO. 70097 Timothy B. Pierce Signed Arizona U.S.A. Expires 12/31/28

PREPARED BY: PACE
DESIGNED BY: NE
DRAWN BY: DS, WW
CHECKED BY: TP
SCALE: AS NOTED
DATE: NOV 2025
JOB NO. B614

THESE DRAWINGS ARE THE PROPERTY OF P.A.C.E. AND SHALL NOT BE REPRODUCED IN ANY MANNER NOR BE USED FOR CONSTRUCTION UNLESS STAMPED 'ISSUED FOR CONSTRUCTION'.

TITLE
EXISTING SITE PLAN

JOB
TOWN OF JEROME
WASTEWATER
TREATMENT PLANT
YAVAPAI CO. AZ

PREPARED BY:
PACE
Advanced Water Engineering
8723 E. VIA DE VENTURA, SUITE A, SCOTTSDALE, CA 85258
P: (480) 991-3955 | www.pacewater.com
TAYLOR B. PIERCE R.C.E. 70097 DATE

SHEET
M1.0
26 OF 99 SHEETS

JOB NO. B614

W:\B614\Engineering\B614-30sheets\B614- M1.0 EXISTING SITE PLAN.dwg - Tab: SITE PLAN - by neddington on 03/10/26 at 2:04:43 PM



CONSTRUCTION NOTES:

1. INSTALL TEMPORARY 12" BYPASS FOR THE EXISTING SEWER INFLUENT LINE.
2. REMOVE EXISTING BAR SCREEN AND RELOCATE UPSTREAM OF THE EXISTING PRIMARY SETTLING TANK.
3. INSTALL TEMPORARY BAR SCREEN AND 12" SEWER BYPASS LINE TO THE PRIMARY SETTLING TANK.
4. DEMOLISH AND REMOVE THE EXISTING TANK SAND FILTER, TANK CLARIFIER, STORAGE BUILDING, AND STATIC SCREEN.
5. CUT AND CAP EXISTING 2" WATER SERVICE TO THE WWTP.
6. DEMOLISH AND REMOVE THE EXISTING STORAGE SHED.
7. CUT AND CAP PIPE FROM THE PRIMARY SETTLING TANK TO THE EAST REED BED.
8. CUT AND CAP LINE FROM DOSING TANK A TO EAST TRICKLING FILTER.
9. LOCATE, CUT AND CAP LINE FROM SAND FILTER TANK.
10. CUT, CAP AND PROTECT IN PLACE EAST TRICKLING FILTER.
11. CUT AND CAP DRAIN LINE FROM EAST TRICKLING FILTER UPSTREAM OF WEST TRICKLING FILTER LINE TIE-IN LOCATION.
12. REMOVE ALL EXISTING PIPING WITHIN THE EAST REED BED.
13. CUT AND CAP EAST REED BED DRAIN LINE AT THE EXISTING MANHOLE.
14. PROTECT IN PLACE.
15. REMOVE APPROX. 140 LF OF EXISTING FENCE.

NOTES:
1. CONTRACTOR TO PROVIDE A SEQUENCE OF CONSTRUCTION TO ENGINEER FOR REVIEW PRIOR TO CONSTRUCTION. CONTRACTOR SHALL BE RESPONSIBLE FOR ALL MEANS AND METHODS.

DEMOLITION PLAN PH-I

NORTH
40 20 0 40 80

NO	BY	DATE	REVISIONS	DATE	APP.

Registered Professional Engineer (Civil) CERTIFICATE NO. 70097 Taylor B. Pierce Signed 12/31/25 ARIZONA, U.S.A. Expires 12/31/28

PREPARED BY: PACE
DESIGNED BY: NE
DRAWN BY: DS, WW
CHECKED BY: TP
SCALE: AS NOTED
DATE: NOV 2025
JOB NO.: B614

THESE DRAWINGS ARE THE PROPERTY OF P.A.C.E. AND SHALL NOT BE REPRODUCED IN ANY MANNER NOR BE USED FOR CONSTRUCTION UNLESS STAMPED 'ISSUED FOR CONSTRUCTION'.

TITLE: **DEMOLITION PLAN PH-I**

JOB: TOWN OF JEROME
WASTEWATER
TREATMENT PLANT
YAVAPAI CO. AZ

100% ISSUED FOR BID

PREPARED BY: TAYLOR B. PIERCE R.C.E 70097 DATE
PACE
Advanced Water Engineering
8723 E. Via de Commercio, Suite 2-114, Scottsdale, CA 85258
P: (408) 991-3395 | www.pacewater.com

SHEET
M1.1
27 OF 99 SHEETS

JOB NO. B614

W:\B614\Engineering\B614-30\sheets\B614 - M1.1 DEMO PLANS PH-I.dwg - Tab: M1.1 - by reddington on 11/17/25 at 10:25:59 AM



CONSTRUCTION NOTES:

1. REMOVE TEMPORARY BYPASS PIPING FROM THE INFLUENT LINE ONCE FLOW HAS BEEN DIVERTED THROUGH NEW WWTP.
2. DEMOLISH AND REMOVE EXISTING PRIMARY SETTLING TANK. REMOVE ALL ABOVE GRADE PIPING & CAP AND ABANDON IN PLACE ALL BELOW GRADE PIPING.
3. DEMOLISH AND REMOVE EXISTING DOSING TANK A. REMOVE ALL ABOVE GRADE PIPING & CAP AND ABANDON IN PLACE ALL BELOW GRADE PIPING.
4. REMOVE ALL ABOVE GRADE PIPING & CAP AND ABANDON IN PLACE ALL BELOW GRADE PIPING. ABANDON IN PLACE WEST TRICKLING FILTER.
5. CAP AND ABANDON IN PLACE EXISTING SEPTIC TANK. REMOVE ALL ABOVE GRADE PIPING & CAP AND ABANDON IN PLACE ALL BELOW GRADE PIPING.
6. ABANDON IN PLACE EXISTING WEST REED BED. REMOVE ALL ABOVE GRADE PIPING & CAP AND ABANDON IN PLACE ALL BELOW GRADE PIPING.
7. CAP AND ABANDON IN PLACE EXISTING MANHOLE. CUT AND CAP ALL PIPING BELOW GRADE AND ABANDON IN PLACE.
8. CAP AND ABANDON IN PLACE EXISTING DOSING TANK B. REMOVE ALL ABOVE GRADE PIPING & CAP AND ABANDON IN PLACE ALL BELOW GRADE PIPING.
9. ABANDON IN PLACE EXISTING WEST WETLAND CELL. REMOVE ALL ABOVE GRADE PIPING & CAP AND ABANDON IN PLACE ALL BELOW GRADE PIPING. REUSE TRAFFIC BARRIER FOR NEW OVERFLOW BASIN.
10. REMOVE ALL PIPING WITHIN THE THREE EAST WETLAND BASINS & CUT, CAP, AND ABANDON IN PLACE ALL PIPING OUTSIDE THE BASINS.
11. CAP AND ABANDON IN PLACE EAST LEVEL ADJUST SUMPS. CUT, CAP AND ABANDON IN PLACE ALL BELOW GRADE PIPING.
12. CAP AND ABANDON IN PLACE WEST LEVEL ADJUST SUMP. CUT, CAP AND ABANDON IN PLACE ALL BELOW GRADE PIPING.
13. CAP AND ABANDON IN PLACE EXISTING CHLORINE CONTACT CHAMBER. CUT, CAP AND ABANDON IN PLACE ALL BELOW GRADE PIPING.

DEMOLITION PLAN PH-II

NORTH

40 20 0 40 80

100% ISSUED FOR BID

PREPARED BY: TAYLOR B. PIERCE R.C.E 70097 DATE

PACE
Advanced Water Engineering
8723 E. VIA DE COMMERCIO, 1ST FLOOR | SCOTTSDALE, CA 85258
P. (480) 991-3595 | www.paceaztr.com

TITLE: DEMOLITION PLAN PH-II

JOB: TOWN OF JEROME WASTEWATER TREATMENT PLANT — YAVAPAI CO. AZ

NO	BY	DATE	REVISIONS	DATE	APP.

Registered Professional Engineer (Civil) CERTIFICATE NO. 70097 TAYLOR B. PIERCE Signed ARIZONA U.S.A. Expires 12/31/28

PREPARED BY: PACE
DESIGNED BY: NE
DRAWN BY: DS, WW
CHECKED BY: TP
SCALE: AS NOTED
DATE: NOV 2025
JOB NO.: B614

SHEET M1.2
28 OF 99 SHEETS

JOB NO. B614

THESE DRAWINGS ARE THE PROPERTY OF P.A.C.E. AND SHALL NOT BE REPRODUCED IN ANY MANNER NOR BE USED FOR CONSTRUCTION UNLESS STAMPED 'ISSUED FOR CONSTRUCTION'.

W:\B614\Engineering\B614-30sheets\B614 - M1.2 DEMO PLANS PHII.dwg - Tab: M1.2 - by reddington on 03/10/26 at 12:57:22 PM

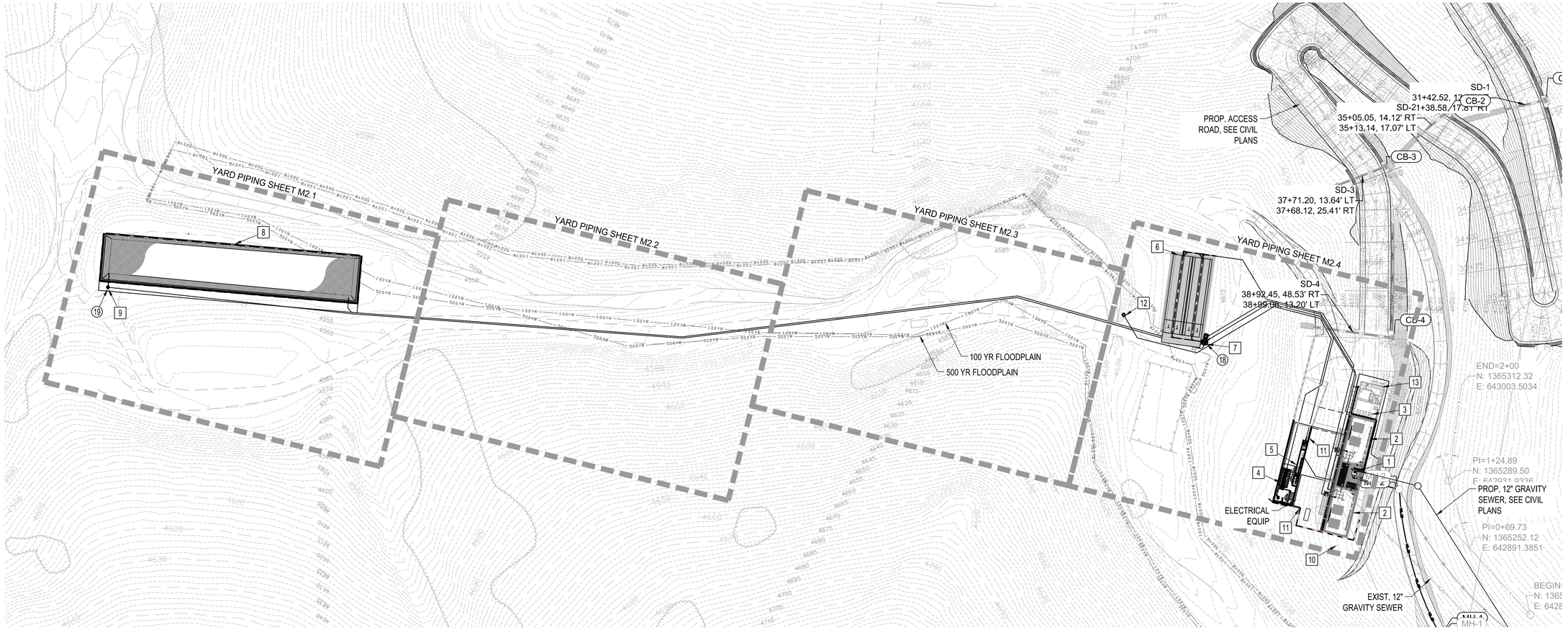

CONSTRUCTION NOTES:

1. HEADWORKS PER SHEET M3.0.
2. SEQUENCING BATCH REACTOR PER SHEET M3.0.
3. BLOWER ROOM PER SHEET M7.0.
4. DEWATERING PAD PER SHEET M5.3.
5. CHLORINE CONTACT CHANNEL PER SHEET M4.0.
6. SLUDGE DRYING BED PER SHEET M5.0.
7. DRYING BED LIFT STATION PER SHEET M5.2.
8. EMERGENCY OVERFLOW BASIN PER SHEET M6.0.
9. PACKAGED OVERFLOW LIFT STATION PER DETAIL A SHEET M8.2.
10. REPLACE 140± LF OF PERIMETER FENCING TO MATCH.
11. RETAINING WALL PER STRUCTURAL SHEET S2.10.
12. PRECAST CONCRETE EFFLUENT SAMPLE BOX PER SHEET M5.0.
13. OPERATIONS ROOM PER SHEET M7.0.

PROPOSED SITE PLAN

NORTH

40 20 0 40 80

100% ISSUED FOR BID

CALL TWO WORKING DAYS BEFORE YOU DIG
602-263-1100
1-800-STAKE-IT
(OUTSIDE MARICOPA COUNTY)

NO	BY	DATE	REVISIONS	DATE	APP.

Registered Professional Engineer (Civil) CERTIFICATE NO. 70097 Taylor B. Pierce Signed 12/31/25 ARIZONA, U.S.A. Expires 12/31/28

THESE DRAWINGS ARE THE PROPERTY OF P.A.C.E. AND SHALL NOT BE REPRODUCED IN ANY MANNER NOR BE USED FOR CONSTRUCTION UNLESS STAMPED 'ISSUED FOR CONSTRUCTION'.

PREPARED BY: PACE
DESIGNED BY: NE
DRAWN BY: DS, WW
CHECKED BY: TP
SCALE: AS NOTED
DATE: NOV 2025
JOB NO.: B614

TITLE: PROPOSED SITE PLAN

JOB: TOWN OF JEROME WASTEWATER TREATMENT PLANT — YAVAPAI CO. AZ

PREPARED BY: TAYLOR B. PIERCE R.C.E. 70097 DATE

PACE
Advanced Water Engineering
CONNECTED WITH A VISION
8123 E. VIA DE COMERCIO, SUITE A, SCOTTSDALE, CA 85258
P: (480) 991-3595 | W: www.pacewater.com

SHEET M2.0
29 OF 99 SHEETS

JOB NO. B614

W:\B614\Engineering\B614-3\Sheets\B614 - M2.0 SITE PLANS.dwg - Tab: SITE PLAN - by redlington on 03/10/26 at 2:18:11 PM

CONSTRUCTION NOTES:

1. INSTALL 2" SCH. 80 PVC PIPE.
2. INSTALL 4" C900 PVC PIPE.
3. INSTALL 4" - 45° D.I. BEND W/ MJ CONNECTIONS W/ THRUST BLOCKS PER DETAIL C SHEET M8.0.
4. REPLACE 10± LF OF PERIMETER FENCING TO MATCH.
5. INSTALL 2" PVC COUPLING.
6. TRENCH AND BACKFILL PER DETAIL D, SHEET M8.1.
7. CONTRACTOR TO PROVIDE FITTINGS AS REQUIRED TO CONNECT TO LIFT STATION DISCHARGE PIPING

EARTHWORK ESTIMATE (UNADJUSTED)

CUT	1,465	Cu. Yd.
FILL	0	Cu. Yd.
NET	1,465	Cu. Yd. <CUT>

CONTRACTOR SHALL VERIFY EARTHWORK QUANTITIES

POINT TABLE			
PNT. #	NORTHING	EASTING	DESCRIPTION
1	1366308.34	642657.44	OF BSN BTM CNR
2	1366131.64	642724.07	OF BSN BTM CNR
3	1366299.09	642632.53	OF BSN BTM CNR
4	1366121.64	642697.12	OF BSN BTM CNR
5	1366295.09	642622.30	LS CTR

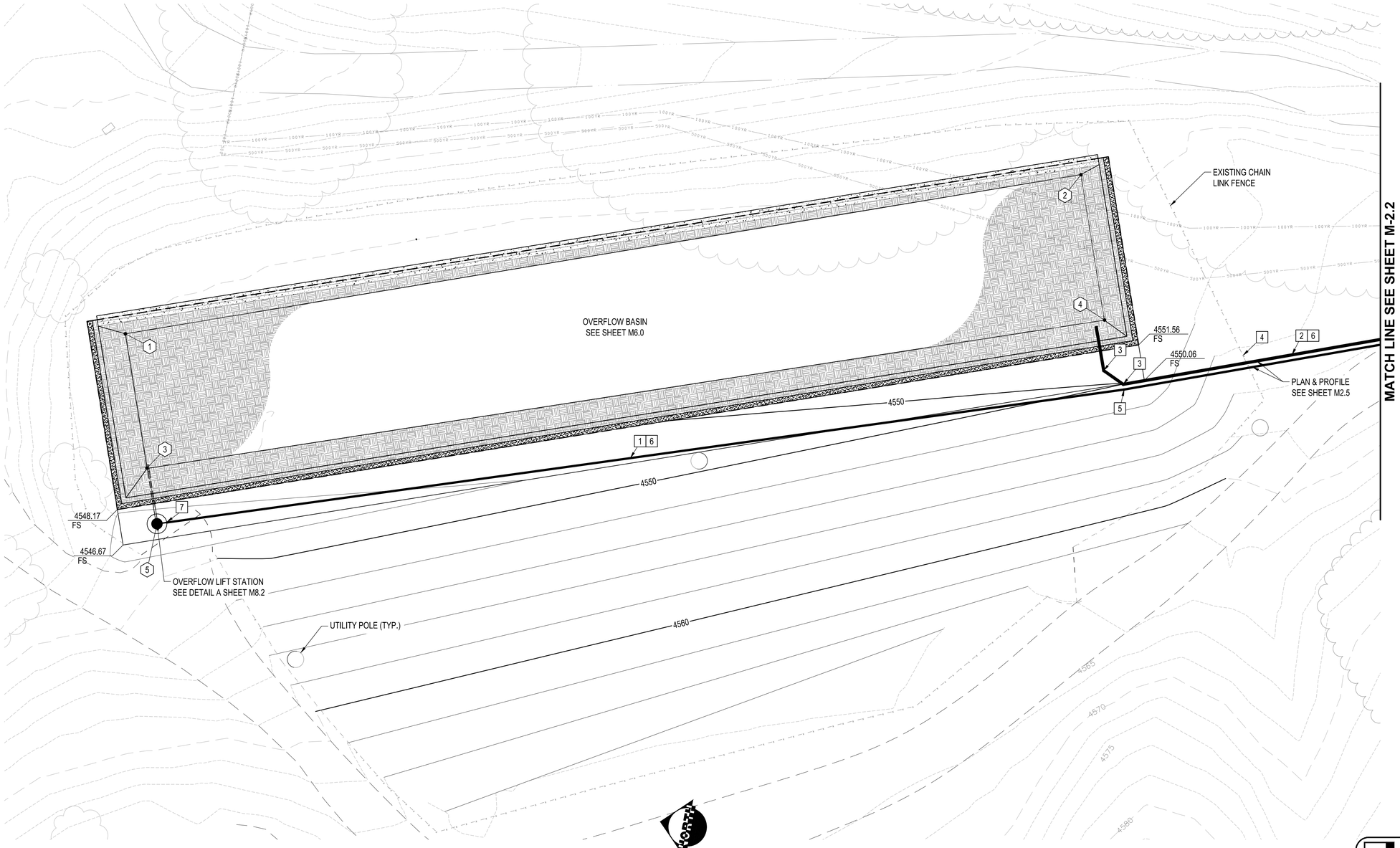

YARD PIPING & GRADING PLAN
SCALE: 1" = 10'

CALL TWO WORKING DAYS BEFORE YOU DIG
602-263-1100
1-800-STAKE-IT
(OUTSIDE MARICOPA COUNTY)

100% ISSUED FOR BID

NO	BY	DATE	REVISIONS	DATE	APP.

Registered Professional Engineer (Civil) CERTIFICATE NO. 70097 TAYLOR B. PIERCE Signed ARIZONA, U.S.A. Expires 12/31/28

THESE DRAWINGS ARE THE PROPERTY OF P.A.C.E. AND SHALL NOT BE REPRODUCED IN ANY MANNER NOR BE USED FOR CONSTRUCTION UNLESS STAMPED 'ISSUED FOR CONSTRUCTION'.

PREPARED BY: PACE
DESIGNED BY: NE
DRAWN BY: DS, WW
CHECKED BY: TP
SCALE: AS NOTED
DATE: NOV 2025
JOB NO.: B614

TITLE: YARD PIPING & GRADING PLAN

JOB: TOWN OF JEROME WASTEWATER TREATMENT PLANT
YAVAPAI CO. AZ

PREPARED BY: TAYLOR B. PIERCE R.C.E 70097 DATE
PACE
Advanced Water Engineering
8723 E. Via de Ventura Suite 110 SCOTTSDALE, CA 85258
P: (480) 991-3595 | www.pacewater.com

SHEET M2.1
30 OF 99 SHEETS

JOB NO. B614

W:\B614 Engineering\B614-30\sheets\B614 - M2.1 YARD PIPING - OLD VERSION RESTORED.dwg - Tab: M2.1 - by reddington on 03/10/26 at 2:03:53 PM

CONSTRUCTION NOTES:

1. INSTALL 2" SCH. 80 PVC PIPE.
2. INSTALL 2" - 11.25° SCH. 80 PVC BEND.
3. INSTALL 4" C900 PVC PIPE.
4. INSTALL 4" - 11.25° D.I. BEND W/ MJ CONNECTIONS W/ THRUST BLOCKS PER DETAIL C SHEET M8.0.
5. TRENCH AND BACKFILL PER DETAIL D, SHEET M8.1.

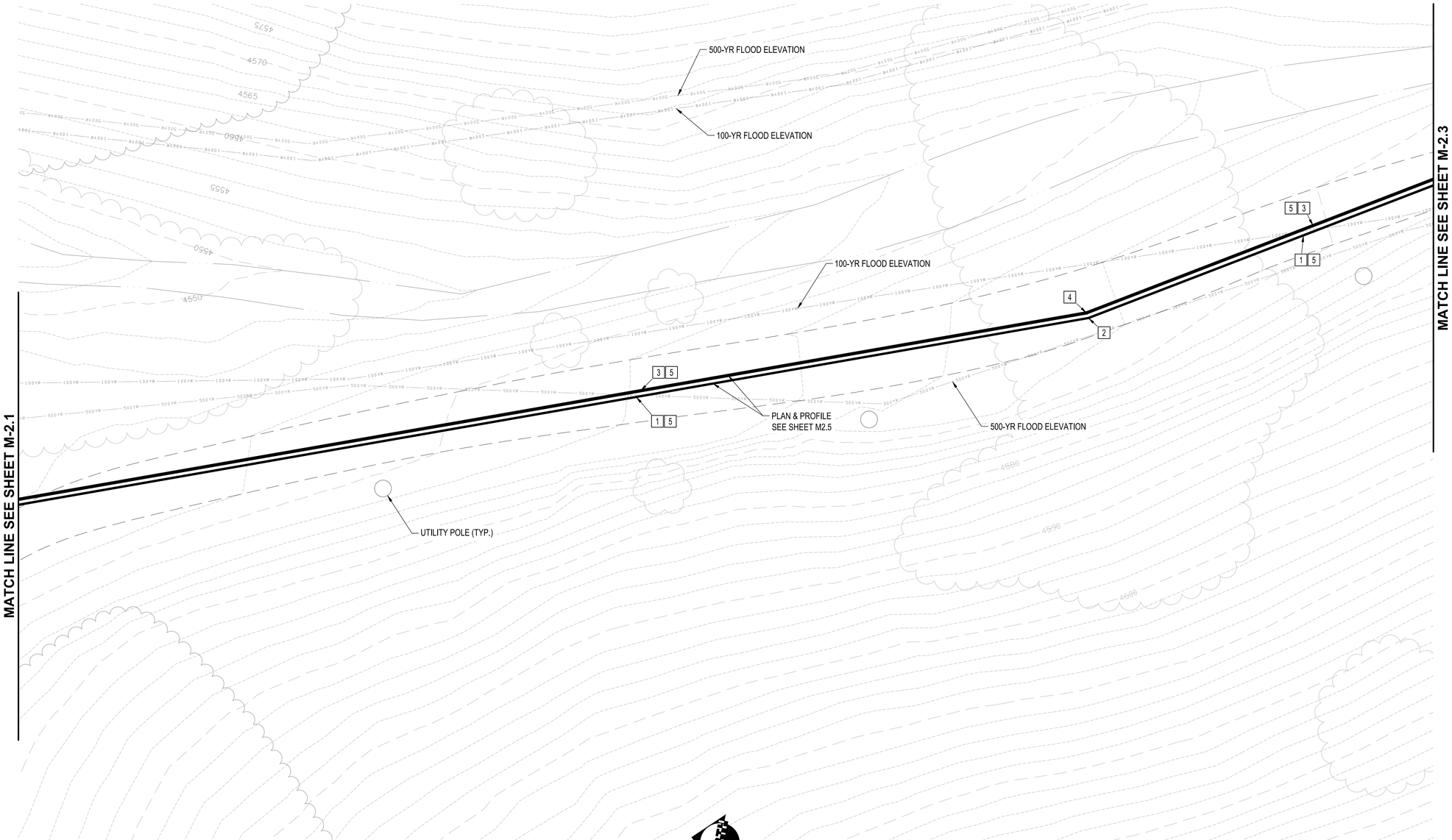

YARD PIPING PLAN
SCALE: 1" = 10'

NORTH
10 5 0 10 20

CALL TWO WORKING DAYS BEFORE YOU DIG
602-263-1100
1-800-STAKE-IT
(OUTSIDE MARICOPA COUNTY)

100% ISSUED FOR BID

NO	BY	DATE	REVISIONS	DATE	APP.

Registered Professional Engineer (Civil)
CERTIFICATE NO. 70097
TAYLOR B. PIERCE
Signed
ARIZONA, U.S.A.
Expires 12/31/28

PREPARED BY: PACE
DESIGNED BY: NE
DRAWN BY: DS, WW
CHECKED BY: TP
SCALE: AS NOTED
DATE: NOV 2025
JOB NO. B614

THESE DRAWINGS ARE THE PROPERTY OF P.A.C.E. AND SHALL NOT BE REPRODUCED IN ANY MANNER NOR BE USED FOR CONSTRUCTION UNLESS STAMPED 'ISSUED FOR CONSTRUCTION'.

TITLE
YARD PIPING PLAN

JOB
TOWN OF JEROME
WASTEWATER
TREATMENT PLANT
YAVAPAI CO. AZ

PREPARED BY:
PACE
Advanced Water Engineering
8723 E. Via de Commercio, Suite 100 | SCOTTSDALE, CA 85258
P: (480) 991-3595 | www.pacewater.com
TAYLOR B. PIERCE R.C.E 70097 DATE

SHEET
M2.2
31 OF 99 SHEETS

JOB NO. B614

W:\B614\Engineering\B614-30\sheets\B614 - M2.1 YARD PIPING - OLD VERSION RESTORED.dwg - Tab: M2.2 - by reddington on 03/10/26 at 2:05:53 PM

CONSTRUCTION NOTES:

1. INSTALL 2" SCH. 80 PVC PIPE.
2. INSTALL 2" - 22.5° SCH. 80 PVC BEND.
3. INSTALL 4" D.I. PIPE.
4. INSTALL 4" C900 PVC PIPE.
5. INSTALL 4" - 22.5° D.I. BEND W/ MJ FITTINGS W/ THRUST BLOCKS PER DETAIL C SHEET M8.0.
6. INSTALL CLEANOUT PER DETAIL I SHEET M8.3.
7. INSTALL PVC TO DIP TRANSITION COUPLING, ROMAC OR EQUAL.
8. TRENCH AND BACKFILL PER DETAIL D, SHEET M8.1.

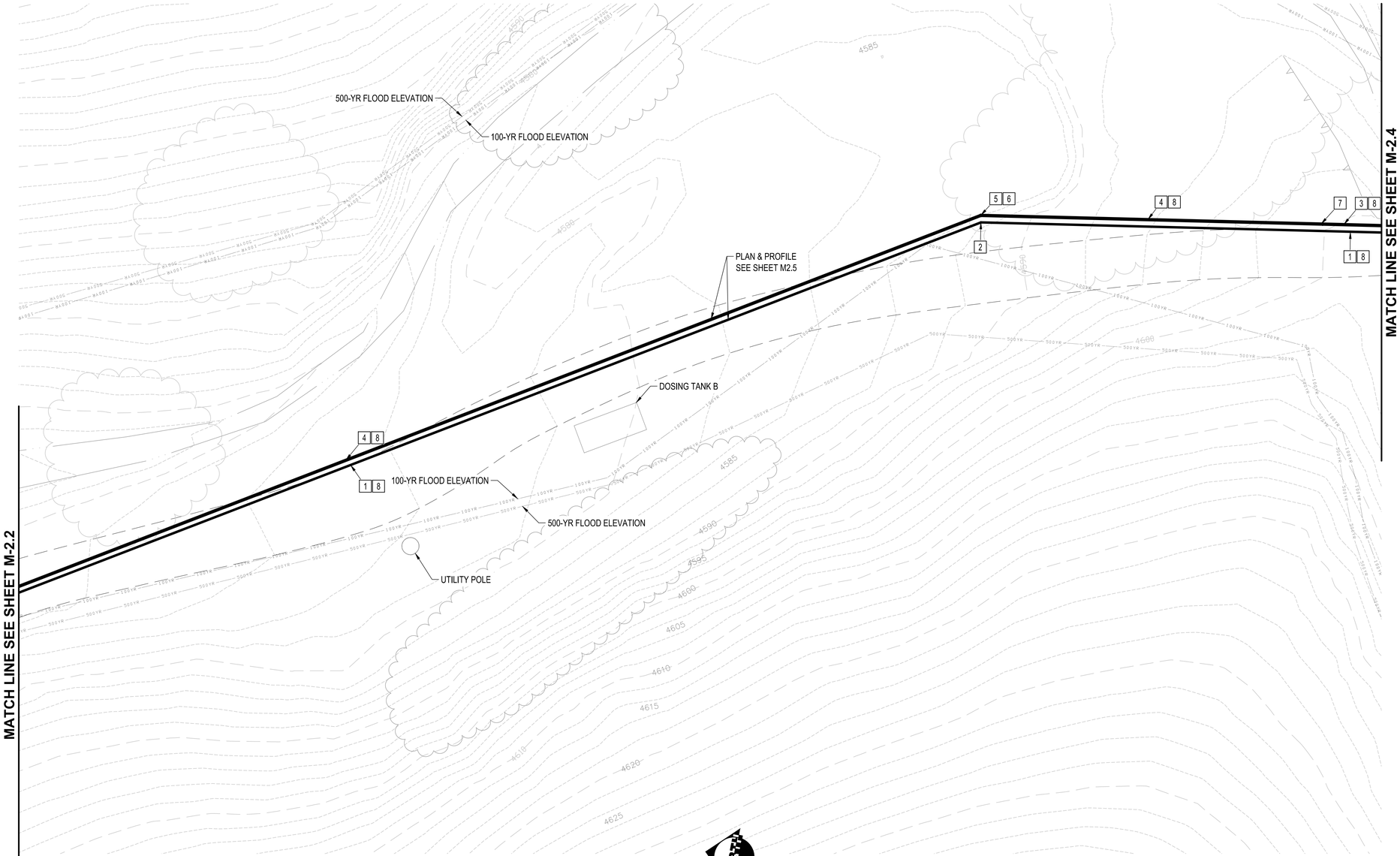

YARD PIPING PLAN
SCALE: 1" = 10'

NORTH
10 5 0 10 20

NO	BY	DATE	REVISIONS	DATE	APP.

THESE DRAWINGS ARE THE PROPERTY OF P.A.C.E. AND SHALL NOT BE REPRODUCED IN ANY MANNER NOR BE USED FOR CONSTRUCTION UNLESS STAMPED 'ISSUED FOR CONSTRUCTION'.

Registered Professional Engineer (Civil) CERTIFICATE NO. 70097 TAYLOR B. PIERCE Signed ARIZONA, U.S.A. Expires 12/31/28

PREPARED BY:	PACE
DESIGNED BY:	NE
DRAWN BY:	DS, WW
CHECKED BY:	TP
SCALE:	AS NOTED
DATE	NOV 2025
JOB NO.	B614

TITLE: YARD PIPING

JOB: TOWN OF JEROME WASTEWATER TREATMENT PLANT
YAVAPAI CO. AZ

100% ISSUED FOR BID

PREPARED BY: TAYLOR B. PIERCE R.C.E. 70097 DATE
PACE Advanced Water Engineering
8723 E. VIA de COMMERCIO, BUILDING 3, SCOTTSDALE, CA 85258
P: (480) 991-3595 | www.pacewater.com

SHEET M2.3
32 OF 99 SHEETS

JOB NO. B614

W:\B614\Engineering\B614-3\Sheets\B614 - M2.1 YARD PIPING - OLD VERSION RESTORED.dwg - Tab: M2.3 - by reddington on 03/10/26 at 2:03:53 PM

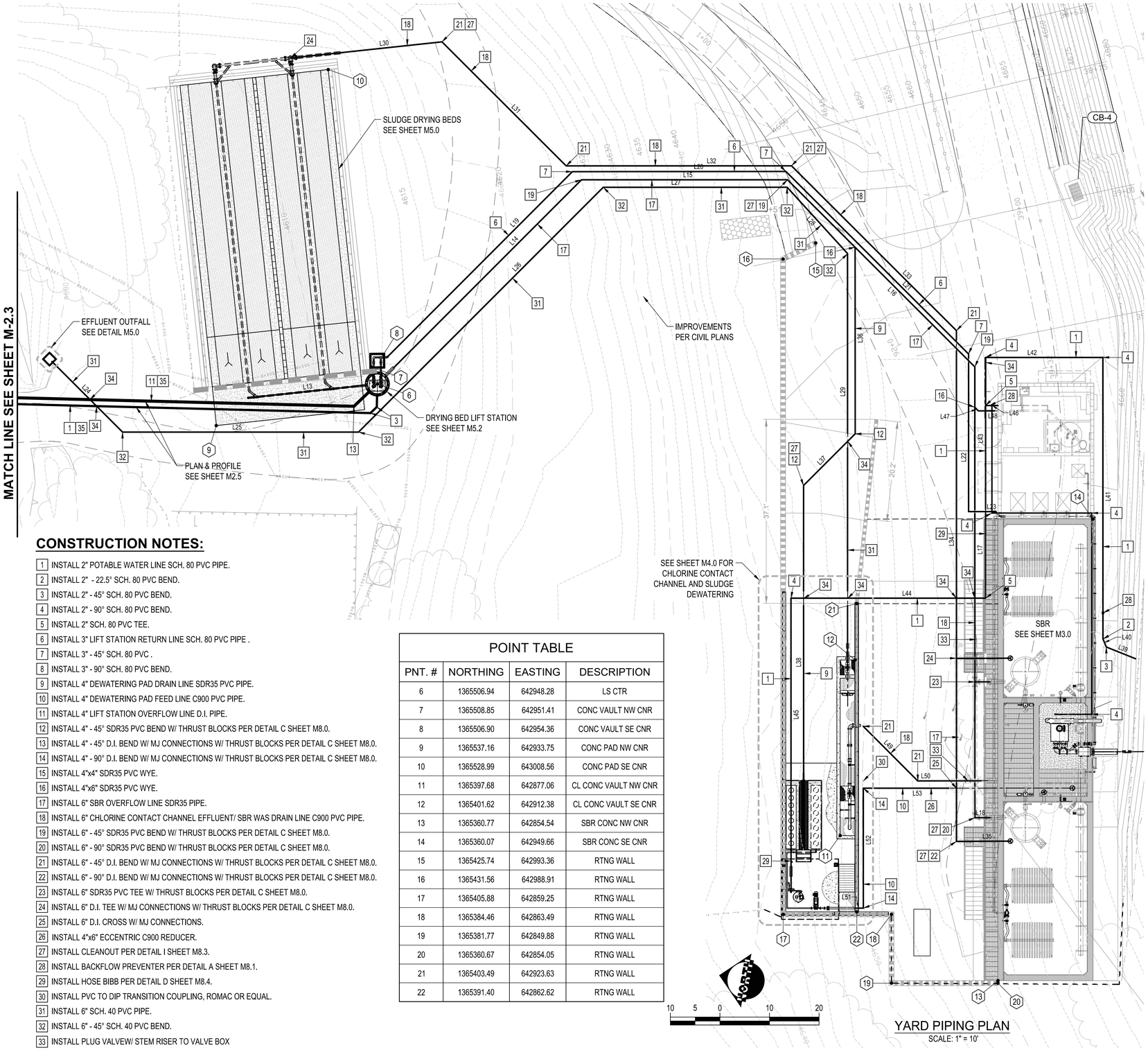

CONSTRUCTION NOTES:

1. INSTALL 2" POTABLE WATER LINE SCH. 80 PVC PIPE.
2. INSTALL 2" - 22.5° SCH. 80 PVC BEND.
3. INSTALL 2" - 45° SCH. 80 PVC BEND.
4. INSTALL 2" - 90° SCH. 80 PVC BEND.
5. INSTALL 2" SCH. 80 PVC TEE.
6. INSTALL 3" LIFT STATION RETURN LINE SCH. 80 PVC PIPE .
7. INSTALL 3" - 45° SCH. 80 PVC .
8. INSTALL 3" - 90° SCH. 80 PVC BEND.
9. INSTALL 4" DEWATERING PAD DRAIN LINE SDR35 PVC PIPE.
10. INSTALL 4" DEWATERING PAD FEED LINE C900 PVC PIPE.
11. INSTALL 4" LIFT STATION OVERFLOW LINE D.I. PIPE.
12. INSTALL 4" - 45° SDR35 PVC BEND W/ THRUST BLOCKS PER DETAIL C SHEET M8.0.
13. INSTALL 4" - 45° D.I. BEND W/ MJ CONNECTIONS W/ THRUST BLOCKS PER DETAIL C SHEET M8.0.
14. INSTALL 4" - 90° D.I. BEND W/ MJ CONNECTIONS W/ THRUST BLOCKS PER DETAIL C SHEET M8.0.
15. INSTALL 4"x4" SDR35 PVC WYE.
16. INSTALL 4"x6" SDR35 PVC WYE.
17. INSTALL 6" SBR OVERFLOW LINE SDR35 PIPE.
18. INSTALL 6" CHLORINE CONTACT CHANNEL EFFLUENT/ SBR WAS DRAIN LINE C900 PVC PIPE.
19. INSTALL 6" - 45° SDR35 PVC BEND W/ THRUST BLOCKS PER DETAIL C SHEET M8.0.
20. INSTALL 6" - 90° SDR35 PVC BEND W/ THRUST BLOCKS PER DETAIL C SHEET M8.0.
21. INSTALL 6" - 45° D.I. BEND W/ MJ CONNECTIONS W/ THRUST BLOCKS PER DETAIL C SHEET M8.0.
22. INSTALL 6" - 90° D.I. BEND W/ MJ CONNECTIONS W/ THRUST BLOCKS PER DETAIL C SHEET M8.0.
23. INSTALL 6" SDR35 PVC TEE W/ THRUST BLOCKS PER DETAIL C SHEET M8.0.
24. INSTALL 6" D.I. TEE W/ MJ CONNECTIONS W/ THRUST BLOCKS PER DETAIL C SHEET M8.0.
25. INSTALL 6" D.I. CROSS W/ MJ CONNECTIONS.
26. INSTALL 4"x6" ECCENTRIC C900 REDUCER.
27. INSTALL CLEANOUT PER DETAIL I SHEET M8.3.
28. INSTALL BACKFLOW PREVENTER PER DETAIL A SHEET M8.1.
29. INSTALL HOSE BIBB PER DETAIL D SHEET M8.4.
30. INSTALL PVC TO DIP TRANSITION COUPLING, ROMAC OR EQUAL.
31. INSTALL 6" SCH. 40 PVC PIPE.
32. INSTALL 6" - 45° SCH. 40 PVC BEND.
33. INSTALL PLUG VALVEW/ STEM RISER TO VALVE BOX
34. POTABLE WATER & SEWER SEPERATION PER DETAIL F SHEET M8.3
35. TRENCH AND BACKFILL PER DETAIL D, SHEET M8.1.

POINT TABLE

PNT. #	NORTHING	EASTING	DESCRIPTION
6	1365506.94	642948.28	LS CTR
7	1365508.85	642951.41	CONC VAULT NW CNR
8	1365506.90	642954.36	CONC VAULT SE CNR
9	1365537.16	642933.75	CONC PAD NW CNR
10	1365528.99	643008.56	CONC PAD SE CNR
11	1365397.68	642877.06	CL CONC VAULT NW CNR
12	1365401.62	642912.38	CL CONC VAULT SE CNR
13	1365360.77	642854.54	SBR CONC NW CNR
14	1365360.07	642949.66	SBR CONC SE CNR
15	1365425.74	642993.36	RTNG WALL
16	1365431.56	642988.91	RTNG WALL
17	1365405.88	642859.25	RTNG WALL
18	1365384.46	642863.49	RTNG WALL
19	1365381.77	642849.88	RTNG WALL
20	1365360.67	642854.05	RTNG WALL
21	1365403.49	642923.63	RTNG WALL
22	1365391.40	642862.62	RTNG WALL

LINE DATA

LINE #	DISTANCE	BEARING	START POINT	END POINT
L13	22.48'	S17°18'33"E	N 1365530.33, E 642940.99	N 1365508.86, E 642947.68
L14	56.23'	S56°12'23"E	N 1365505.83, E 642949.94	N 1365474.55, E 642996.68
L15	41.55'	S11°12'16"E	N 1365474.55, E 642996.68	N 1365433.79, E 643004.75
L16	53.40'	S33°46'31"W	N 1365433.79, E 643004.75	N 1365389.40, E 642975.07
L17	90.91'	S78°47'08"W	N 1365389.40, E 642975.07	N 1365371.72, E 642885.90
L18	3.06'	S11°12'16"E	N 1365371.72, E 642885.90	N 1365368.72, E 642886.49
L19	52.66'	S56°14'49"E	N 1365505.95, E 642954.14	N 1365476.69, E 642997.93
L20	43.07'	S11°14'49"E	N 1365476.69, E 642997.93	N 1365434.44, E 643006.33
L21	52.08'	S33°46'38"W	N 1365434.44, E 643006.33	N 1365391.15, E 642977.37
L22	31.78'	S78°47'08"W	N 1365391.15, E 642977.37	N 1365384.97, E 642946.20
L23	5.63'	S11°12'52"E	N 1365384.97, E 642946.20	N 1365379.45, E 642947.29
L24	19.82'	S33°47'52"W	N 1365571.96, E 642939.80	N 1365555.49, E 642928.78
L25	47.61'	S11°12'09"E	N 1365555.49, E 642928.78	N 1365508.79, E 642938.03
L26	69.82'	S56°12'21"E	N 1365508.79, E 642938.03	N 1365469.95, E 642996.05
L27	37.08'	S11°11'56"E	N 1365469.95, E 642996.05	N 1365433.58, E 643003.25
L28	18.14'	S36°24'57"W	N 1365433.58, E 643003.25	N 1365418.98, E 642992.48
L29	91.27'	S78°48'35"W	N 1365418.98, E 642992.48	N 1365401.27, E 642902.95
L30	30.72'	S17°17'44"E	N 1365536.89, E 643009.37	N 1365507.56, E 643018.50
L31	35.41'	S33°46'20"W	N 1365507.56, E 643018.50	N 1365478.13, E 642998.82
L32	45.45'	S11°13'40"E	N 1365478.13, E 642998.82	N 1365433.55, E 643007.67
L33	47.02'	S33°47'44"W	N 1365433.55, E 643007.67	N 1365394.47, E 642981.52
L34	103.00'	S78°47'25"W	N 1365394.47, E 642981.52	N 1365374.45, E 642880.48
L35	10.88'	S11°24'18"E	N 1365374.45, E 642880.48	N 1365363.79, E 642882.63
L36	37.61'	N78°47'08"E	N 1365410.46, E 642957.14	N 1365417.77, E 642994.04
L37	14.74'	S56°12'52"E	N 1365418.65, E 642944.90	N 1365410.46, E 642957.14
L38	59.50'	N78°47'08"E	N 1365407.08, E 642886.53	N 1365418.65, E 642944.90
L39	6.37'	S10°40'27"W	N 1365352.41, E 642924.80	N 1365346.15, E 642923.62
L40	1.74'	S55°40'27"W	N 1365353.39, E 642926.23	N 1365352.41, E 642924.80
L41	56.80'	S78°47'44"W	N 1365364.43, E 642981.96	N 1365353.39, E 642926.23
L42	23.67'	S11°12'16"E	N 1365387.65, E 642977.36	N 1365364.43, E 642981.96
L43	48.55'	N78°47'44"E	N 1365378.21, E 642929.73	N 1365387.65, E 642977.36
L44	39.25'	S11°12'16"E	N 1365416.71, E 642922.10	N 1365378.21, E 642929.73
L45	59.28'	N78°47'44"E	N 1365405.19, E 642863.95	N 1365416.71, E 642922.10
L46	2.50'	N11°12'16"W	N 1365383.31, E 642968.33	N 1365385.76, E 642967.84
L47	1.00'	N33°47'44"E	N 1365386.98, E 642966.52	N 1365387.82, E 642967.07
L48	3.25'	N11°11'39"W	N 1365383.80, E 642967.15	N 1365386.98, E 642966.52
L49	15.57'	S33°47'44"W	N 1365397.42, E 642899.59	N 1365384.48, E 642890.93
L50	14.13'	S11°20'19"E	N 1365384.48, E 642890.93	N 1365370.63, E 642893.71
L51	1.67'	S11°12'52"E	N 1365391.90, E 642863.29	N 1365390.26, E 642863.62
L52	24.20'	N78°47'08"E	N 1365390.26, E 642863.62	N 1365394.97, E 642887.36
L53	42.17'	S11°12'24"E	N 1365394.97, E 642887.36	N 1365353.60, E 642895.55

NO	BY	DATE	REVISIONS	DATE	APP.

Registered Professional Engineer (Civil)
CERTIFICATE NO.
Timothy R. Pace
Signed
ARIZONA, U.S.A.
Expires 12/31/28

THESE DRAWINGS ARE THE PROPERTY OF P.A.C.E. AND SHALL NOT BE REPRODUCED IN ANY MANNER NOR BE USED FOR CONSTRUCTION UNLESS STAMPED 'ISSUED FOR CONSTRUCTION'.

PREPARED BY: PACE
DESIGNED BY: NE
DRAWN BY: DS, WW
CHECKED BY: TP
SCALE: AS NOTED
DATE: NOV 2025
JOB NO.: B614

TITLE: YARD PIPING

JOB: TOWN OF JEROME WASTEWATER TREATMENT PLANT — YAVAPAI CO. AZ

100% ISSUED FOR BID

PREPARED BY: TAYLOR B. PIERCE

PACE
Advanced Water Engineering
ARIZONA | CALIFORNIA | NEVADA | UTAH
8723 E. Via de Commercio, Suite 104, Scottsdale, AZ 85258
P: (480) 991-3595 | www.pacewater.com
R.C.E 70097

DATE

CALL TWO WORKING DAYS BEFORE YOU DIG
602-263-1100
1-800-STAKE-IT
(OUTSIDE MARICOPA COUNTY)

SHEET M2.4
33 OF 99 SHEETS

JOB NO. B614

W:\B614-Engineering\B614-3\sheets\B614 - M2.1 YARD PIPING - OLD VERSION RESTORED.dwg - Tab: M2.4 - by reddington on 03/10/26 at 2:03:53 PM

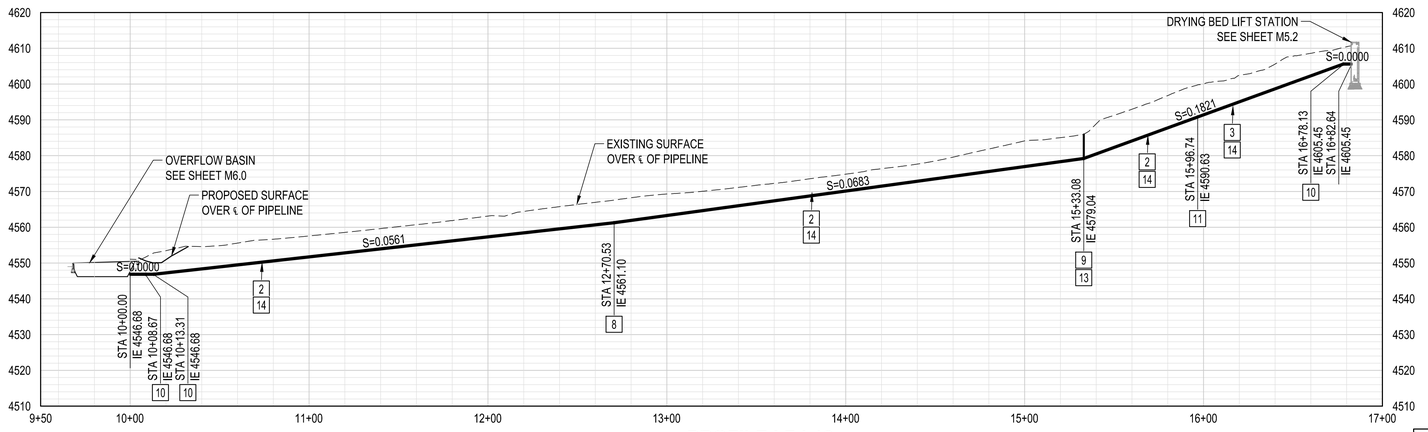

PROFILE L7-L12

SCALE: HORZ: 1" = 40'
VERT: 1" = 20'

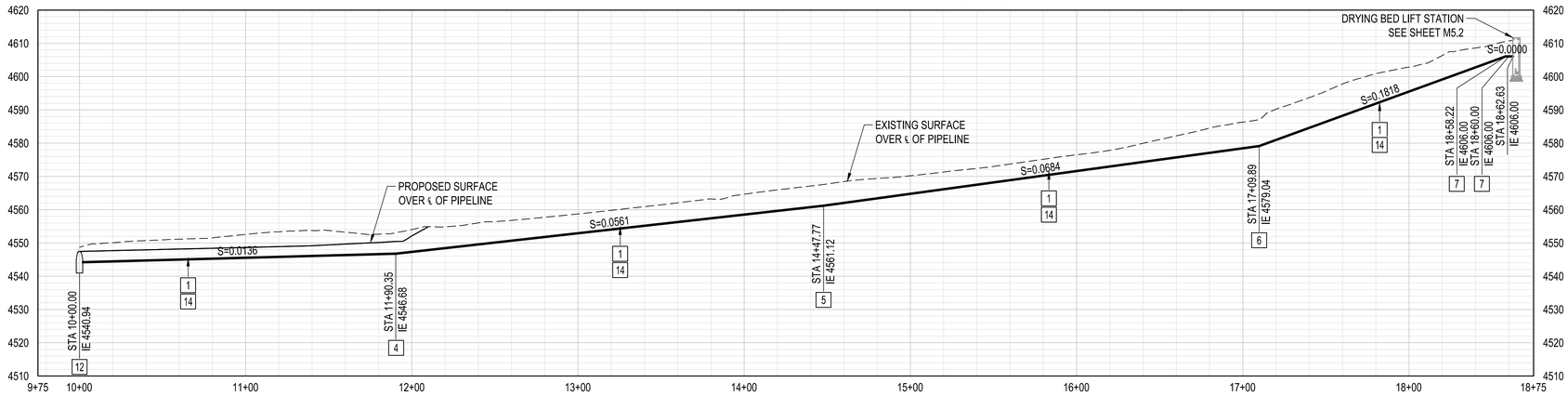

PROFILE L1-L6

SCALE: HORZ: 1" = 40'
VERT: 1" = 20'

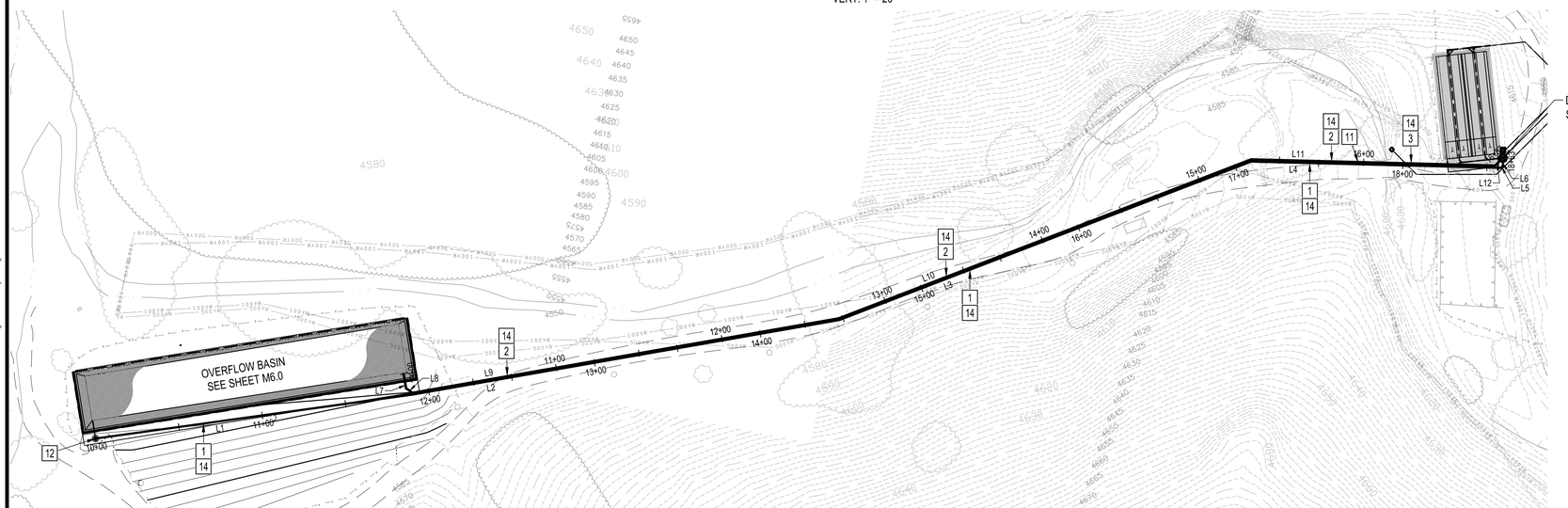

PLAN

SCALE: 1" = 40'

CONSTRUCTION NOTES:

1. INSTALL 2" SCH. 80 PVC PIPE.
2. INSTALL 4" C900 PVC PIPE.
3. INSTALL 4" D.I. PIPE.
4. INSTALL 2" PVC COUPLING.
5. INSTALL 2" - 11.25° SCH. 80 PVC BEND.
6. INSTALL 2" - 22.5° SCH. 80 PVC BEND.
7. INSTALL 2" - 45° SCH. 80 PVC BEND.
8. INSTALL 4" - 11.25° D.I. BEND W/ MJ CONNECTIONS W/ THRUST BLOCKS PER DETAIL C SHEET M8.0.
9. INSTALL 4" - 22.5° D.I. BEND W/ MJ CONNECTIONS W/ THRUST BLOCKS PER DETAIL C SHEET M8.0.
10. INSTALL 4" - 45° D.I. BEND W/ MJ CONNECTIONS W/ THRUST BLOCKS PER DETAIL C SHEET M8.0.
11. INSTALL PVC TO DIP TRANSITION COUPLING, ROMAC OR EQUAL.
12. INSTALL OVERFLOW LIFT STATION PER DETAIL A, SHEET M8.2.
13. INSTALL CLEANOUT PER DETAIL I SHEET M8.3.
14. TRENCH AND BACKFILL PER DETAIL D, SHEET M8.1.

LINE DATA

LINE #	DISTANCE	BEARING	START POINT	END POINT
L1	190.35'	S19°06'20"E	N 1366295.09, E 642622.30	N 1366115.23, E 642684.60
L2	257.42'	S21°06'20"E	N 1366115.23, E 642684.60	N 1365875.07, E 642777.30
L3	262.12'	S32°14'38"E	N 1365875.07, E 642777.30	N 1365653.38, E 642917.15
L4	148.33'	S9°44'37"E	N 1365653.38, E 642917.15	N 1365507.19, E 642942.25
L5	1.78'	S54°44'37"E	N 1365507.19, E 642942.25	N 1365506.16, E 642943.70
L6	2.63'	N80°21'09"E	N 1365506.16, E 642943.70	N 1365506.60, E 642946.29
L7	8.67'	S69°03'53"W	N 1366122.94, E 642695.54	N 1366119.84, E 642687.44
L8	4.64'	S23°54'58"W	N 1366119.84, E 642687.44	N 1366115.60, E 642685.56
L9	257.22'	S21°06'20"E	N 1366115.60, E 642685.56	N 1365875.63, E 642778.18
L10	262.55'	S32°17'02"E	N 1365875.63, E 642778.18	N 1365653.67, E 642918.41
L11	145.05'	S9°44'32"E	N 1365653.67, E 642918.41	N 1365510.71, E 642942.95
L12	4.51'	S54°44'04"E	N 1365510.71, E 642942.95	N 1365508.11, E 642946.64

NO	BY	DATE	REVISIONS	DATE	APP.

Professional Engineer (Civil)
CERTIFICATE NO.
Registered
Signed
ARIZONA, U.S.A.
Expires 12/31/28

PREPARED BY: PACE
DESIGNED BY: NE
DRAWN BY: DS, WW
CHECKED BY: TP
SCALE: AS NOTED
DATE: NOV 2025
JOB NO. B614

TITLE: PLAN & PROFILE

THESE DRAWINGS ARE THE PROPERTY OF P.A.C.E. AND SHALL NOT BE REPRODUCED IN ANY MANNER NOR BE USED FOR CONSTRUCTION UNLESS STAMPED 'ISSUED FOR CONSTRUCTION'.

100% ISSUED FOR BID

JOB: TOWN OF JEROME WASTEWATER TREATMENT PLANT — YAVAPAI CO. AZ

PREPARED BY: TAYLOR B. PIERCE
PACE Advanced Water Engineering
6723 E. VIA CONSUELO, SCOTTSDALE, AZ 85258
P: (480) 991-3595 | www.pacewater.com
R.C.E 70097 DATE

SHEET M2.5
34 OF 99 SHEETS

JOB NO. B614

NORTH
40 20 0 40 80

CALL TWO WORKING DAYS BEFORE YOU DIG
602-263-1100
1-800-STAKE-IT
(OUTSIDE MARICOPA COUNTY)

W:\B614\Engineering\B614-3\sheets\B614 - M2.1 YARD PIPING - OLD VERSION RESTORED.dwg - Tab: M2.5 - by reddington on 03/10/26 at 2:03:53 PM

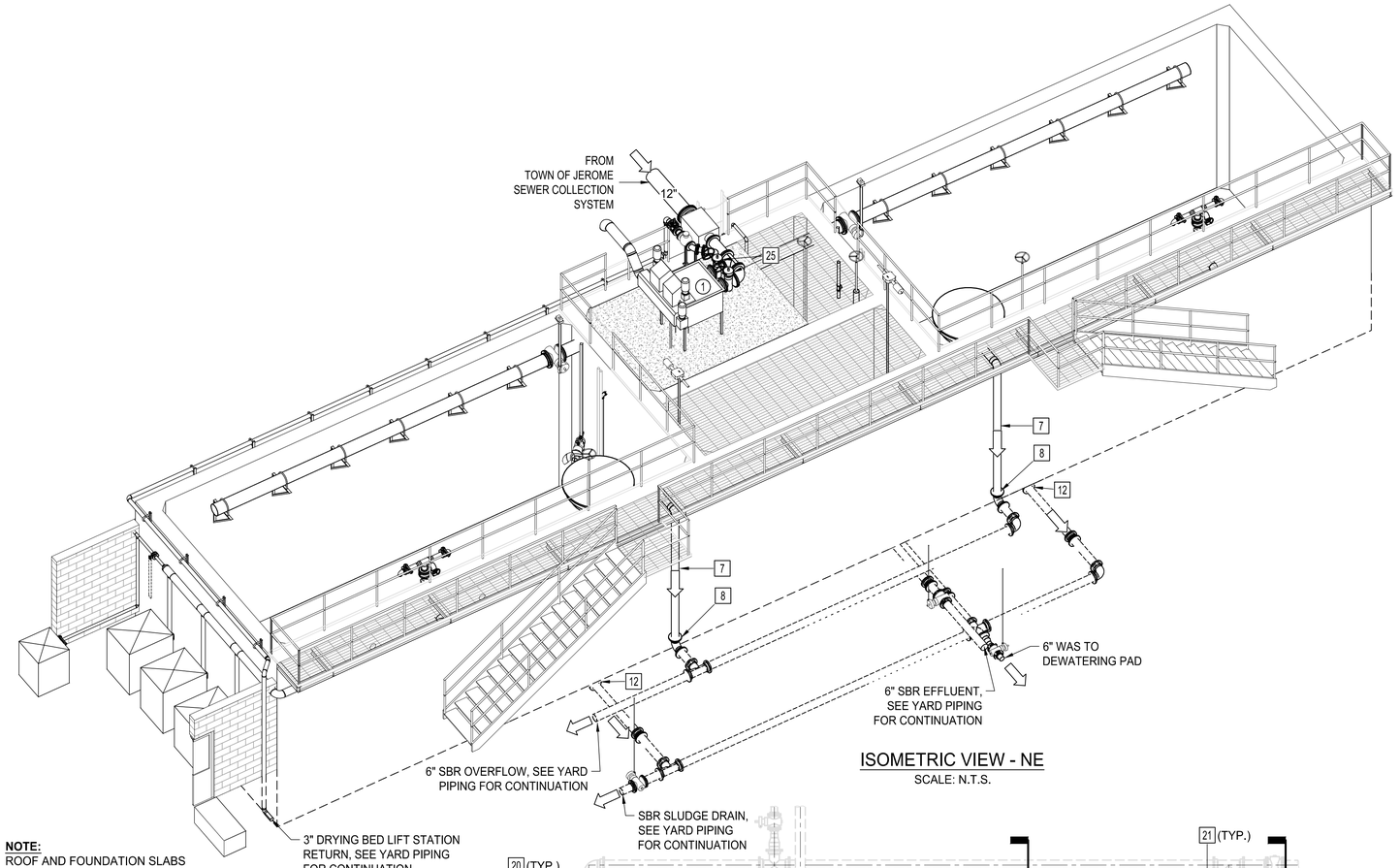

ISOMETRIC VIEW - NE

SCALE: N.T.S.

NOTE:
ROOF AND FOUNDATION SLABS
NOT SHOWN FOR CLARITY.

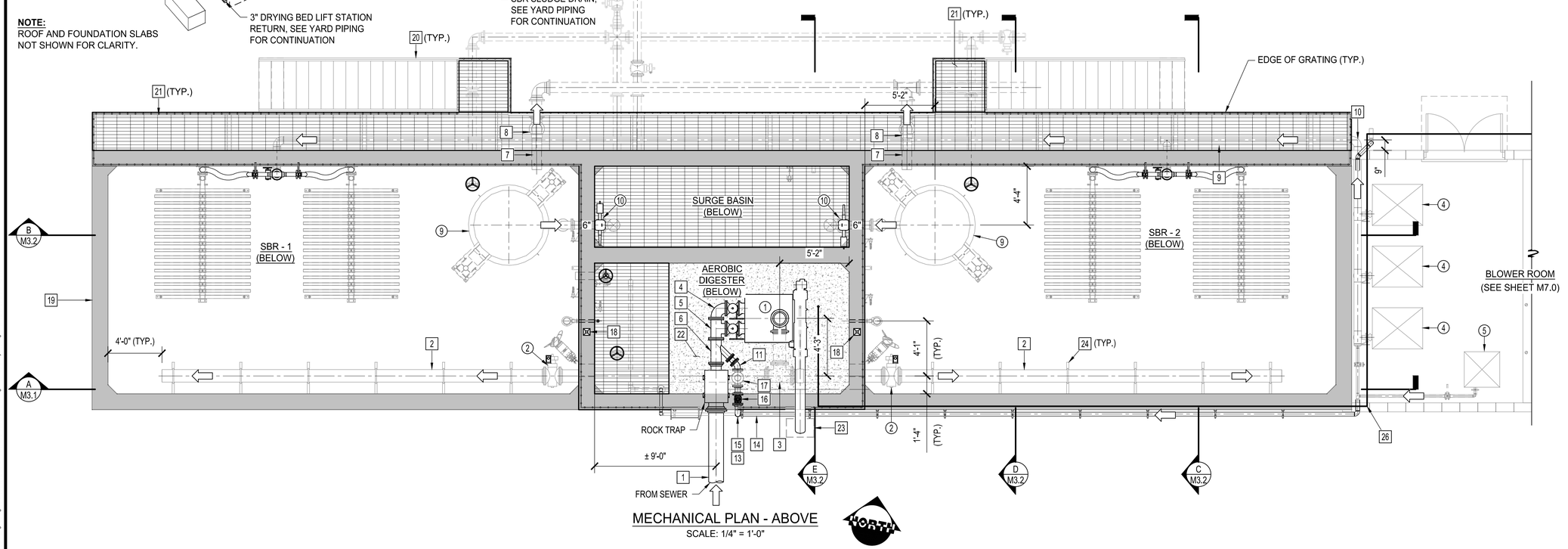

MECHANICAL PLAN - ABOVE

SCALE: 1/4" = 1'-0"

CONSTRUCTION NOTES:

1. INSTALL 12" D.I. PIPE (FLG'D).
2. INSTALL 10" D.I. PIPE (FLG'D).
3. INSTALL 10" D.I. TEE (FLG'D).
4. INSTALL 8" - 90° D.I. BEND (FLG'D).
5. INSTALL 8" D.I. TEE (FLG'D).
6. INSTALL 8"x4" D.I. REDUCING WYE (FLG'D).
7. INSTALL 6" SDR35 PVC PIPE.
8. INSTALL 6" - 90° SDR35 PVC BEND (MJ).
9. INSTALL 6" SCH. 10 CARBON STEEL PIPE.
10. INSTALL 6" - 90° SCH. 10 CARBON STEEL BEND.
11. INSTALL 4" - 45° D.I. BEND (FLG'D).
12. INSTALL 6" - 90° D.I. BEND (MJ).
13. INSTALL 4"x 3" D.I. REDUCER (FLG'D).
14. INSTALL 3" SCH. 80 PVC PIPE.
15. INSTALL 4" - 90° SCH. 80 PVC BEND.
16. INSTALL 4" PVC PLUG VALVE.
17. INSTALL 4" SCH. 80 PVC CHECK VALVE.
18. INSTALL DAVIT CRANE BASE (APPROX. LOCATION).
19. SBR STRUCTURE (SEE STRUCTURAL).
20. STAIRS & RAILING PER MANUFACTURER.
21. GRATING PER MANUFACTURER.
22. CONCRETE SLAB PER STRUCTURAL.
23. WASTE BIN (BY OTHERS).
24. INSTALL PIPE SUPPORTS PER DETAIL A SHT M8.5
25. INSTALL 8" PLUG VALVE, FLG'D.
26. INSTALL 2" SCH. 80 PVC POTABLE WATER

NO	BY	DATE	REVISIONS	DATE	APP.

Registered Professional Engineer (Civil)
CERTIFICATE NO. 70097
Timothy B. Pierce
Signed
ARIZONA, U.S.A.
Expires 12/31/28

PREPARED BY: PACE
DESIGNED BY: NE
DRAWN BY: DS, WW
CHECKED BY: TP
SCALE: AS NOTED
DATE: NOV 2025
JOB NO. B614

THESE DRAWINGS ARE THE PROPERTY OF P.A.C.E. AND SHALL NOT BE REPRODUCED IN ANY MANNER NOR BE USED FOR CONSTRUCTION UNLESS STAMPED 'ISSUED FOR CONSTRUCTION'.

TITLE
SBR MECHANICAL PLAN

JOB
TOWN OF JEROME
WASTEWATER
TREATMENT PLANT
YAVAPAI CO. AZ

100% ISSUED FOR BID

PREPARED BY:
PACE
Advanced Water Engineering
8723 E. VIA DE COMMERCIO, BLDG. 3, SCOTTSDALE, CA 85258
P: (480) 991-3595 | www.pacewater.com
TAYLOR B. PIERCE R.C.E. 70097 DATE

SHEET
M3.0
35 OF 99 SHEETS

JOB NO. B614

W:\B614\Engineering\B614-3\Sheets\B614 - M3.0 MECHANICAL PLAN.dwg - Tab: M3.0 - by neddington on 02/19/26 at 9:31:42 AM

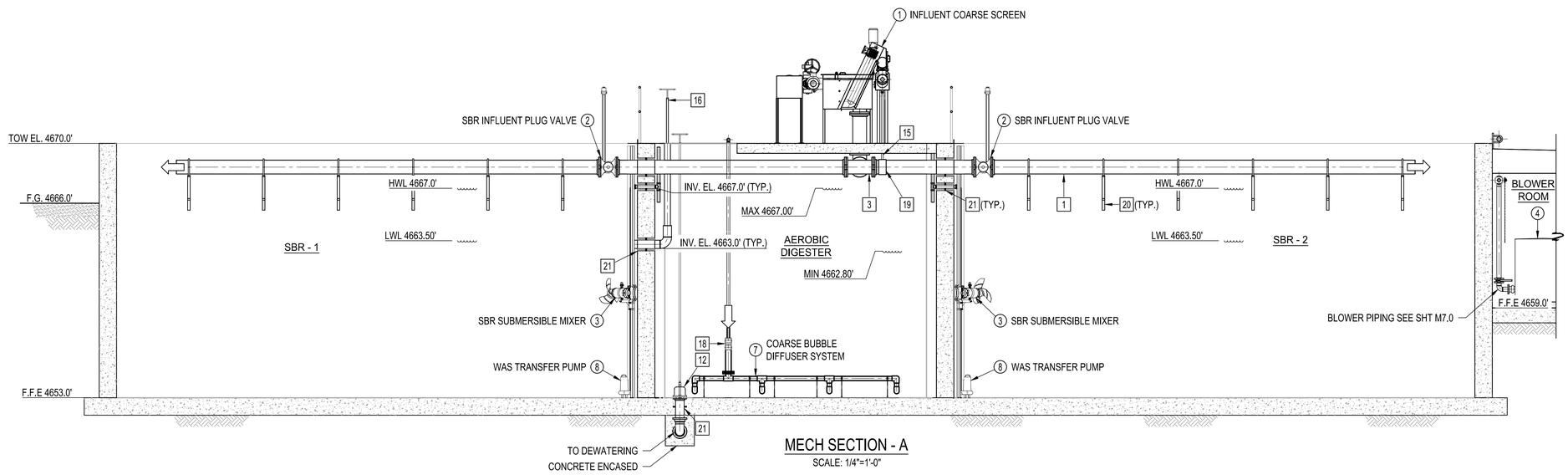

MECH SECTION - A

SCALE: 1/4"=1'-0"

CONSTRUCTION NOTES:

1. INSTALL 10" INFLUENT D.I. PIPE (FLG'D).
2. INSTALL 10" - 90° D.I. BEND (FLG'D).
3. INSTALL 10" D.I. TEE (FLG'D).
4. INSTALL 6" x 4" PVC REDUCER.
5. INSTALL 6" SDR35 PVC PIPE.
6. INSTALL 6" - 90° SDR35 PVC BEND (MJ).
7. INSTALL 6" C900 PVC PIPE.
8. INSTALL 6" - 90° D.I. BEND (MJ).
9. INSTALL 6" C900 PVC CROSS (MJ).
10. INSTALL 6" C900 PVC TEE (MJ).
11. INSTALL 3" SCH. 80 PVC PIPE.
12. INSTALL MUD VALVE w/ STEM RISER (SIZE PER PLAN).
13. SBR STRUCTURE (SEE S2.0).
14. INSTALL 2' x 2' SUMP PER STRUCTURAL PLANS.
15. INSTALL 1" DRAIN LINE FROM SCREEN.
16. INSTALL 6" TELESCOPING VALVE W/ HANDWHEEL.
17. INSTALL 6" BUTTERFLY VALVE W/ ACTUATOR (VENDOR PROVIDED).
18. INSTALL 2"x4" SS TO PVC CONCENTRIC REDUCER (SEE SECTION - A)
19. INSTALL TAP PER PLAN.
20. INSTALL PIPE SUPPORTS PER DETAIL A ON SHEET M8.5.
21. PIPE PENETRATION PER DETAIL G ON SHEET M8.4
22. INSTALL 6" PLUG VALVE.
23. INSTALL 4" PLUG VALVE.
24. INSTALL 6" SCH. 10 CARBON STEEL 90 DEG BEND.
25. INSTALL 6" SCH. 10 CARBON STEEL TEE.
26. INSTALL 6" SCH. 10 CARBON STEEL PIPE.

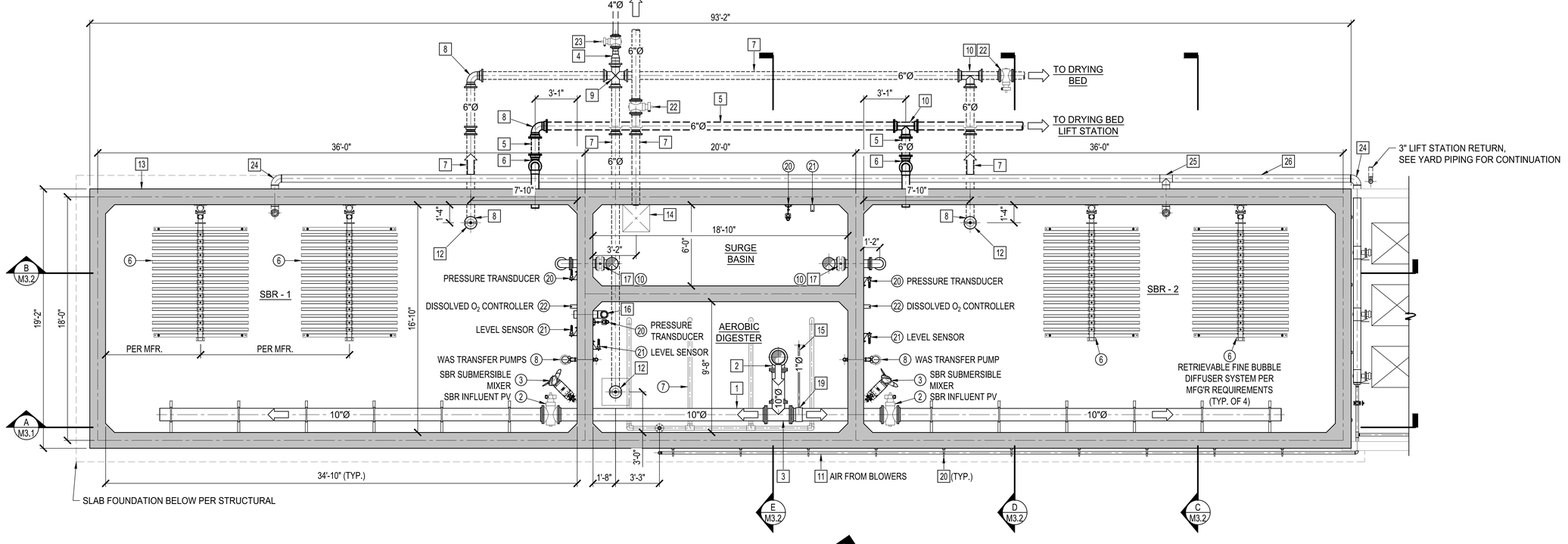

MECHANICAL PLAN - BELOW

SCALE: 1/4" = 1'-0"

NORTH

100% ISSUED FOR BID

PREPARED BY: TAYLOR B. PIERCE

PACE Advanced Water Engineering
8723 E. Via de Ventura, Suite F-110, Scottsdale, CA 85258
P: (480) 991-3995 | www.pacewater.com
R.C.E 70097 DATE

PREPARED BY:	PACE
DESIGNED BY:	NE
DRAWN BY:	DS, WW
CHECKED BY:	TP
SCALE:	AS NOTED
DATE	NOV 2025
JOB NO.	B614

NO	BY	DATE	REVISIONS	DATE	APP.

Registered Professional Engineer (Civil) CERTIFICATE NO. 70097 Timothy Paul Pierce Signed ARIZONA, U.S.A. Expires 12/31/28

THESE DRAWINGS ARE THE PROPERTY OF P.A.C.E. AND SHALL NOT BE REPRODUCED IN ANY MANNER NOR BE USED FOR CONSTRUCTION UNLESS STAMPED 'ISSUED FOR CONSTRUCTION'.

TITLE: SBR MECHANICAL PLAN

JOB: TOWN OF JEROME
WASTEWATER
TREATMENT PLANT
YAVAPAI CO. AZ

SHEET M3.1
36 OF 99 SHEETS

JOB NO. B614

W:\B614\Engineering\B614-3D\sheets\B614 - M3.0 MECHANICAL PLAN.dwg - Tab: M3.1 - by reddington on 02/19/26 at 9:31:42 AM

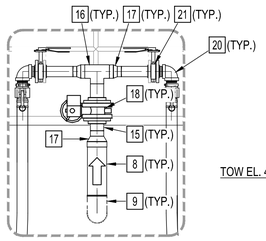

DETAIL - A

SCALE: 1/2"=1'-0"

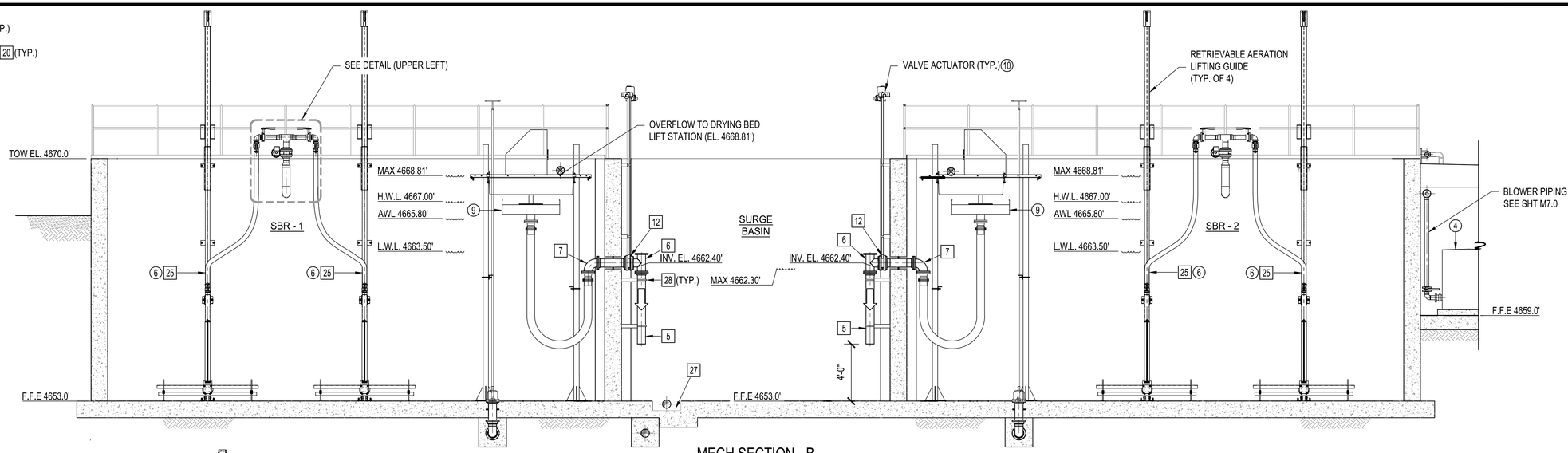

MECH SECTION - B

SCALE: 1/4"=1'-0"

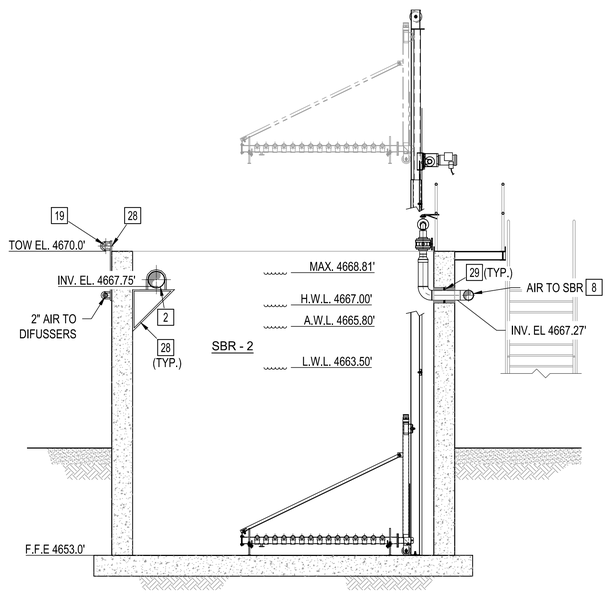

MECH SECTION - C

SCALE: 1/4"=1'-0"

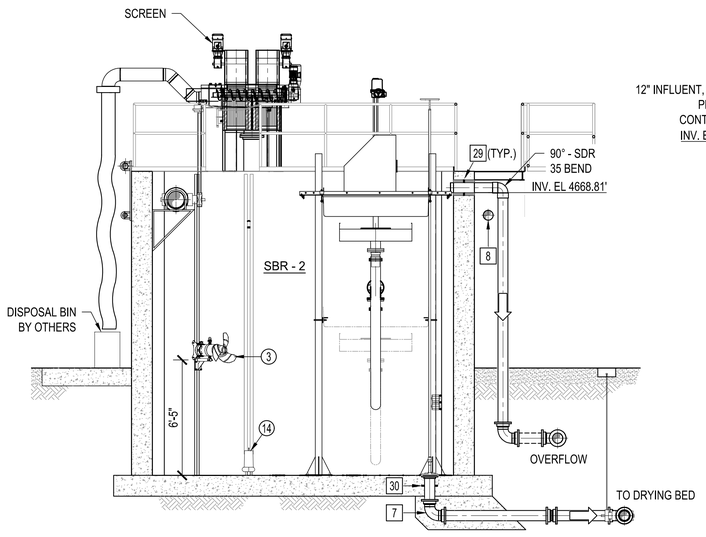

MECH SECTION - D

SCALE: 1/4"=1'-0"

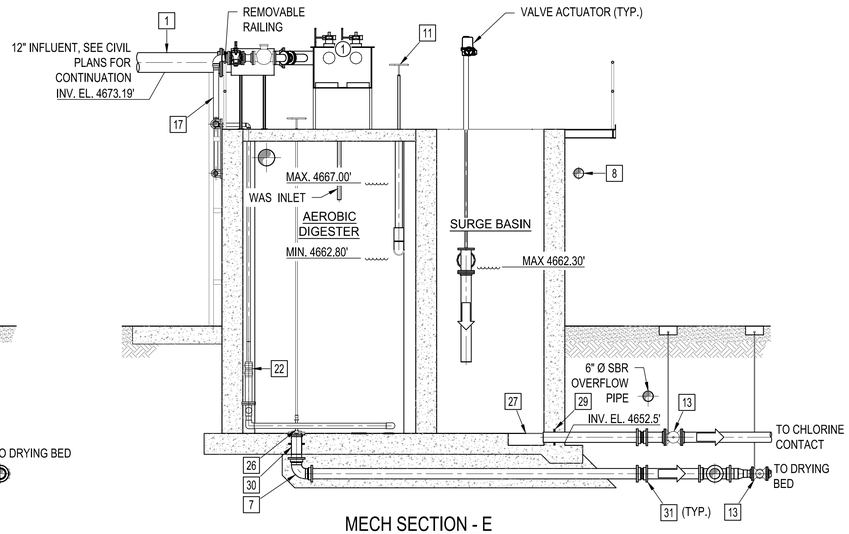

MECH SECTION - E

SCALE: 1/4"=1'-0"

CONSTRUCTION NOTES:

1. INSTALL12" D.I. PIPE (FLG'D).
2. INSTALL 10" INFLUENT D.I. PIPE (FLG'D).
3. INSTALL 10" - 90° D.I. BEND (FLG'D).
4. INSTALL 10" D.I. TEE (FLG'D).
5. INSTALL 6" D.I. PIPE (FLG'D).
6. INSTALL 6" D.I. TEE (FLG'D)
7. INSTALL 6" - 90° D.I. BEND (FLG'D).
8. INSTALL 6" SCH. 10 CARBON STEEL PIPE.
9. INSTALL 6" - 90° CARBON STEEL BEND.
10. INSTALL 6" - 90° CARBON STEEL BEND (FLG'D).
11. INSTALL 6" TELESCOPING VALVE W/ HANDWHEEL.
12. INSTALL 6" BUTTERFLY VALVE W/ ACTUATOR PER SPECIFICATIONS.
13. INSTALL BURRIED-SERVICE 6" PLUG VALVE WITH VALVE CAN AND NUT EXTENSION.
14. INSTALL 4" D.I. PIPE (FLG'D).
15. INSTALL 4" SCH. 10 CARBON STEEL PIPE.
16. INSTALL 4" SCH. 10 CARBON STEEL TEE.
17. INSTALL 4" x 3" SCH. 10 CARBON STEEL CONCENTRIC REDUCER.
18. INSTALL 4" ELECTRICALLY ACTUATED BUTTERFLY VALVE (VENDOR PROVIDED)
19. INSTALL 3" SCH. 80 PVC PIPE.
20. INSTALL 3" - 90° CARBON STEEL BEND (GROOVED).
21. INSTALL 3" BUTTERFLY VALVE PER SPECIFICATIONS.
22. INSTALL 2"x4" SS TO PVC CONCENTRIC REDUCER (SEE SECTION - A)
23. INSTALL 2" SCH. 10 CARBON STEEL PIPE.
24. INSTALL 2" SCH. 10 WELDED CARBON STEEL 90° BEND.
25. INSTALL RETRIEVABLE DIFFUSER ASSEMBLY w/ FLEXIBLE HOSE.
26. INSTALL MUD VALVE w/ EXTENSION PER PLAN.
27. INSTALL 2'x2' SUMP PER STRUCTURAL PLANS.
28. INSTALL PIPE SUPPORTS PER DETAIL A ON SHEET M8.5.
29. INSTALL PIPE PENETRATION PER DETAIL G SHEET M8.4.
30. INSTALL PIPE PENETRATION PER DETAIL F SHEET M8.3.
31. INSTALL DEFLECTION COUPLING.

NO	BY	DATE	REVISIONS	DATE	APP.

Registered Professional Engineer (Civil) CERTIFICATE NO. 70097 TAYLOR B. PIERCE Signed ARIZONA, U.S.A. Expires 12/31/28

THESE DRAWINGS ARE THE PROPERTY OF P.A.C.E. AND SHALL NOT BE REPRODUCED IN ANY MANNER NOR BE USED FOR CONSTRUCTION UNLESS STAMPED 'ISSUED FOR CONSTRUCTION'.

PREPARED BY:	PACE
DESIGNED BY:	NE
DRAWN BY:	DS, WW
CHECKED BY:	TP
SCALE:	AS NOTED
DATE	NOV 2025
JOB NO.	B614

TITLE: **SBR MECHANICAL SECTIONS**

100% ISSUED FOR BID

PREPARED BY: TAYLOR B. PIERCE R.C.E 70097 DATE

PACE
Advanced Water Engineering
8723 E. Via de Ventura, Suite 250 | SCOTTSDALE, CA 85258
P: (480) 991-3995 | www.pacewater.com

JOB: TOWN OF JEROME WASTEWATER TREATMENT PLANT YAVAPAI CO. AZ

SHEET **M3.2** 37 OF 99 SHEETS

JOB NO. B614

W:\B614\Engineering\B614-30sheets\B614 - M3.2 MECHANICAL SECTIONS.dwg - Tab: M3.2 - by raddington on 11/17/25 at 2:34:34 PM

CONSTRUCTION NOTES:

1. INSTALL CONCRETE CHLORINE CONTACT CHANNEL PER STRUCTURAL SHT S1.5.
2. INSTALL TABLET EROSION CHLORINATION EQUIPMENT.
3. INSTALL TABLET EROSION DE-CHLORINATION EQUIPMENT.
4. INSTALL SOLID METAL GRATING WALKWAY PER SPECIFICATION 05 53 00.
5. INSTALL UPWARD WEIR GATE PER SPECIFICATION 40 0513.53.
6. INSTALL 6" FLOW METER.
7. INSTALL 6" ACTUATED BUTTERFLY VALVE.
8. INSTALL 3' x 3' CAST IN PLACE BOX & TRAFFIC RATED COVER.
9. INSTALL 6" D.I. PIPE.
10. INSTALL 6" - 90° D.I. BEND.
11. INSTALL 6" - 90° SCH. 40 PVC BEND.
12. INSTALL PIPE SUPPORTS PER DETAIL A SHEET M8.5.
13. INSTALL PVC FLANGE ADAPTER.
14. INSTALL 6" SCH. 40 PVC PIPE.
15. INSTALL 4" ELECTRICALLY ACTUATED PLUG VALVE.
16. INSTALL DEWATERING FEED PUMP.
17. INSTALL DRY POLYMER MAKE-DOWN AND FEED UNIT.
18. INSTALL POLYMER METERING PUMP.
19. INSTALL BAGGER SYSTEM CONTROL PANEL.
20. INSTALL 2" X 1" PVC REDUCING BUSHING.
21. INSTALL 2" SCH. 80 PVC TEE.
22. INSTALL 2" - 90° SCH. 80 PVC BEND.
23. INSTALL PVC CAP.
24. INSTALL 4" X 2" DI REDUCER.
25. INSTALL SHADE STRUCTURE (PER STRUCTURAL SHT S2.10).
26. INSTALL 30" ALUMINUM STEP-UP STAIRCASE.
27. INSTALL METAL GRATING WALKWAY PER SPECIFICATION 05 53 00.
28. INSTALL PIPE PENETRATION PER DETAIL G, SHEET M8.4.

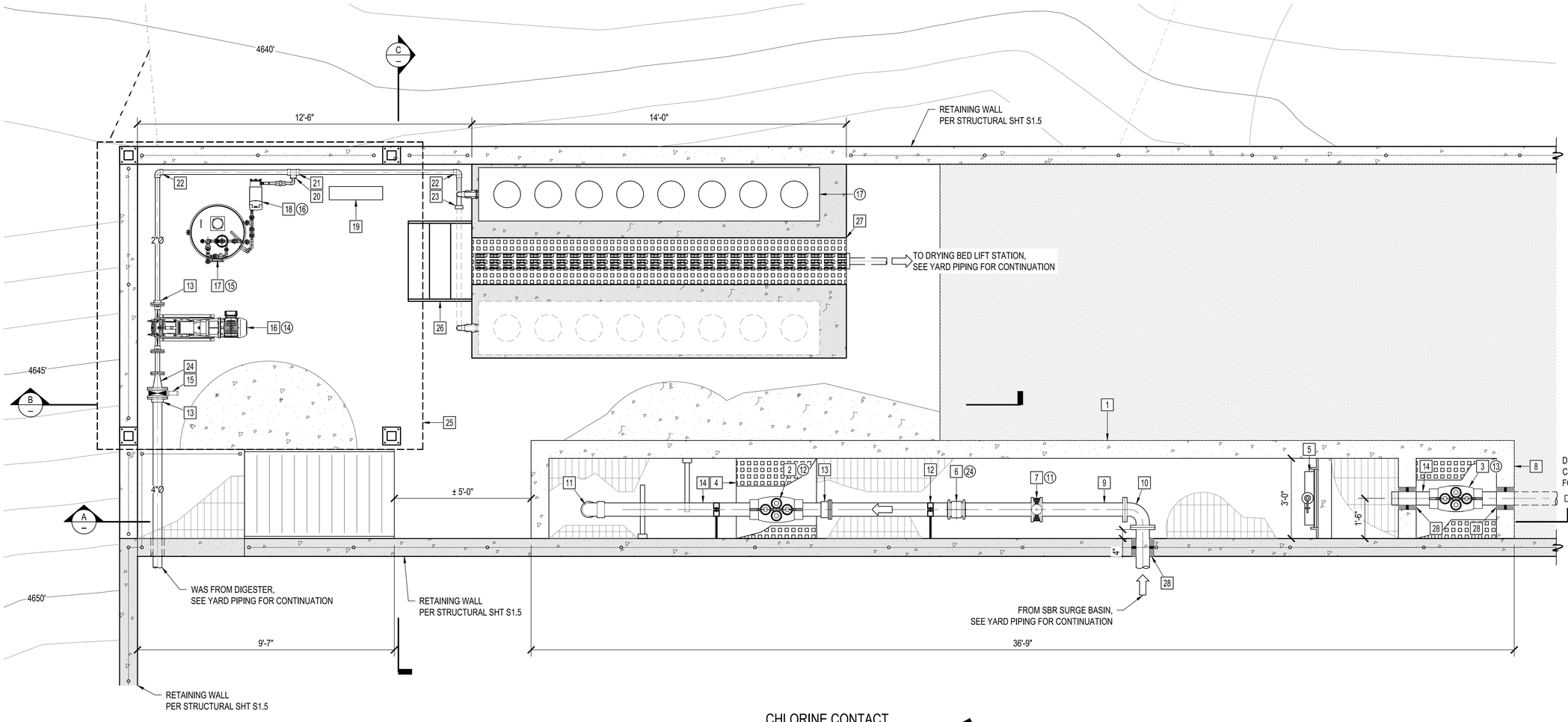

CHLORINE CONTACT
CHANNEL PLAN
SCALE: 1/2"=1'-0"

NORTH

NO	BY	DATE	REVISIONS	DATE	APP.

Registered Professional Engineer (Civil) CERTIFICATE NO. 70097 Timothy B. Pierce Signed ARIZONA, U.S.A. Expires 12/31/28

PREPARED BY: PACE
DESIGNED BY: NE
DRAWN BY: DS, WW
CHECKED BY: TP
SCALE: AS NOTED
DATE: NOV 2025
JOB NO.: B614

THESE DRAWINGS ARE THE PROPERTY OF P.A.C.E. AND SHALL NOT BE REPRODUCED IN ANY MANNER NOR BE USED FOR CONSTRUCTION UNLESS STAMPED 'ISSUED FOR CONSTRUCTION'.

TITLE: **DEWATERING & CCC MECH PLAN**

JOB: TOWN OF JEROME
WASTEWATER
TREATMENT PLANT
YAVAPAI CO. AZ

100% ISSUED FOR BID

PREPARED BY:
PACE
Advanced Water Engineering
8723 E. VIA DE VENTURA, SUITE 290 | SCOTTSDALE, CA 85258
P: (480) 991-3995 | www.paceaztec.com
TAYLOR B. PIERCE R.C.E 70097 DATE

SHEET
M4.0
38 OF 99 SHEETS

JOB NO. B614

W:\B614\Engineering\B614-30sheets\B614 - M4.0 CCC MECH PLAN AND SECTIONS.dwg - Tab: PLAN VIEW - by reddington on 03/02/26 at 8:58:43 AM

CONSTRUCTION NOTES:

1. INSTALL CONCRETE CHLORINE CONTACT CHANNEL PER STRUCTURAL SHT S1.5.
2. INSTALL TABLET EROSION CHLORINATION EQUIPMENT.
3. INSTALL TABLET EROSION DE-CHLORINATION EQUIPMENT.
4. INSTALL SOLID METAL GRATING WALKWAY PER SPECIFICATION 05 53 00.
5. INSTALL UPWARD WEIR GATE PER SPECIFICATION 40 0513.53.
6. INSTALL 6" FLOW METER.
7. INSTALL 6" ACTUATED BUTTERFLY VALVE.
8. GROUT FILL & SLOPE TO INVERT.
9. INSTALL 6" D.I. PIPE.
10. INSTALL 6" - 90° D.I. BEND.
11. INSTALL PIPE SUPPORTS PER DETAIL A SHEET M8.5.
12. INSTALL 6" - 90° SCH. 40 PVC BEND.
13. INSTALL PVC FLANGE ADAPTER
14. INSTALL 6" SCH. 40 PVC PIPE.
15. INSTALL PIPE PENETRATION PER DETAIL G SHEET M8.4.

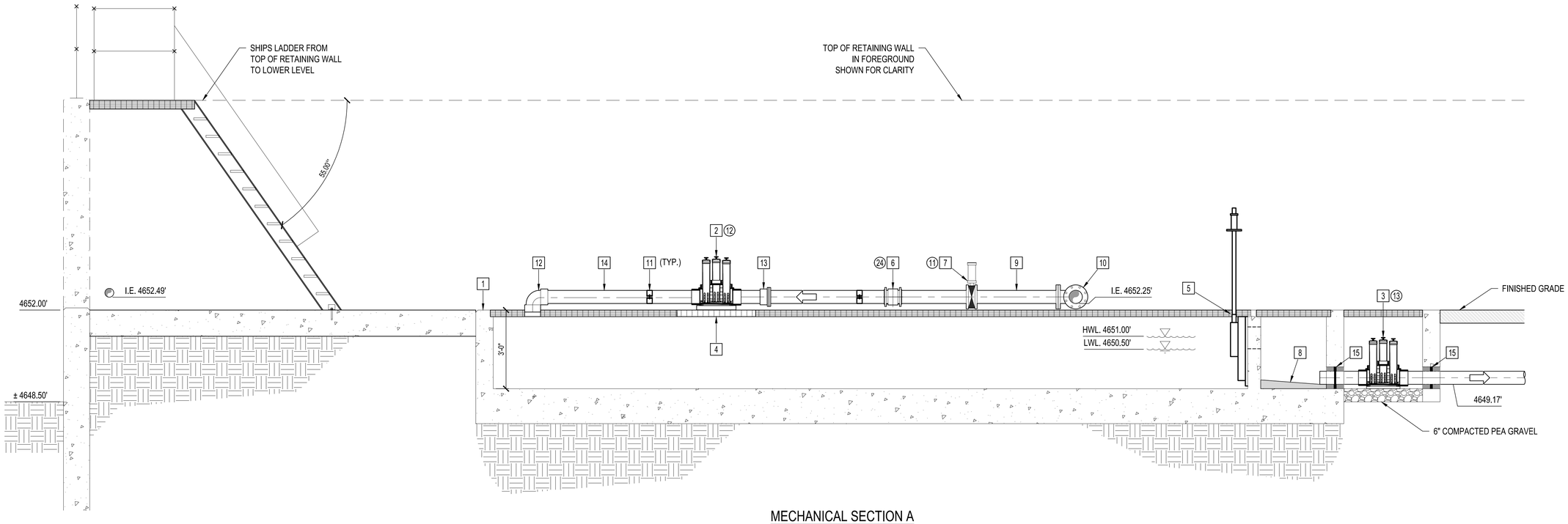

MECHANICAL SECTION A

SCALE: 1/2"=1'-0"

100% ISSUED FOR BID

NO	BY	DATE	REVISIONS	DATE	APP.

Registered Professional Engineer (Civil) CERTIFICATE NO. 70097 Timothy B. Pierce Signed ARIZONA, U.S.A. Expires 12/31/28

THESE DRAWINGS ARE THE PROPERTY OF P.A.C.E. AND SHALL NOT BE REPRODUCED IN ANY MANNER NOR BE USED FOR CONSTRUCTION UNLESS STAMPED 'ISSUED FOR CONSTRUCTION'.

PREPARED BY: PACE
DESIGNED BY: NE
DRAWN BY: DS, WW
CHECKED BY: TP
SCALE: AS NOTED
DATE: NOV 2025
JOB NO.: B614

TITLE: CHLORINE CONTACT BASIN SECTION

JOB: TOWN OF JEROME WASTEWATER TREATMENT PLANT — YAVAPAI CO. AZ

PREPARED BY: TAYLOR B. PIERCE R.C.E 70097 DATE
PACE Advanced Water Engineering
8723 E. Via de Commerce, Suite 104 | Scottsdale, AZ 85258
P: (480) 991-3595 | www.pacewater.com

SHEET M4.1
39 OF 99 SHEETS

JOB NO. B614

W:\B614\Engineering\B614-30\sheets\B614 - MM.0 CCC MECH PLAN AND SECTIONS.dwg - Tab: SECTION 1 - by reddington on 03/02/26 at 9:58:43 AM

CONSTRUCTION NOTES:

1. INSTALL CONCRETE CHLORINE CONTACT CHANNEL PER STRUCTURAL SHT S1.5.
2. INSTALL SOLID METAL GRATING WALKWAY PER SPECIFICATION 05 53 00.
3. INSTALL 6" D.I. PIPE.
4. INSTALL SLUDGE BAGGER SYSTEM.
5. INSTALL SHADE STRUCTURE (PER STRUCTURAL SHT S2.10).
6. INSTALL 14 LF TRENCH DRAIN, NEI MODEL R4996-A8. OR ENGINEER APPROVED EQUAL.
7. INSTALL METAL GRATING WALKWAY PER SPECIFICATION 05 53 00.
8. INSTALL 1" PVC CHECK VALVE.
9. INSTALL 1" BALL VALVE.
10. INSTALL 1" - 90° SCH. 80 PVC BEND.
11. INSTALL 2" SCH. 80 PVC PIPE.
12. INSTALL BAGGER SYSTEM CONTROL PANEL.
13. INSTALL POLYMER METERING PUMP.
14. INSTALL DRY POLYMER MAKE-DOWN AND FEED UNIT.
15. INSTALL DEWATERING FEED PUMP.
16. INSTALL 3" - 90° SCH. 80 PVC BEND.
17. INSTALL 3" SCH. 80 PVC PIPE.
18. INSTALL 3" SCH.80 PVC TEE.
19. INSTALL PVC CAP.
20. RETAINING WALL, PER STRUCTURAL PLANS
21. INSTALL 30" ALUMINUM STEP-UP STAIRCASE.
22. INSTALL 2" - 90° SCH. 80 PVC BEND.
23. PIPE PENETRATION PER G SHEET M8.4.

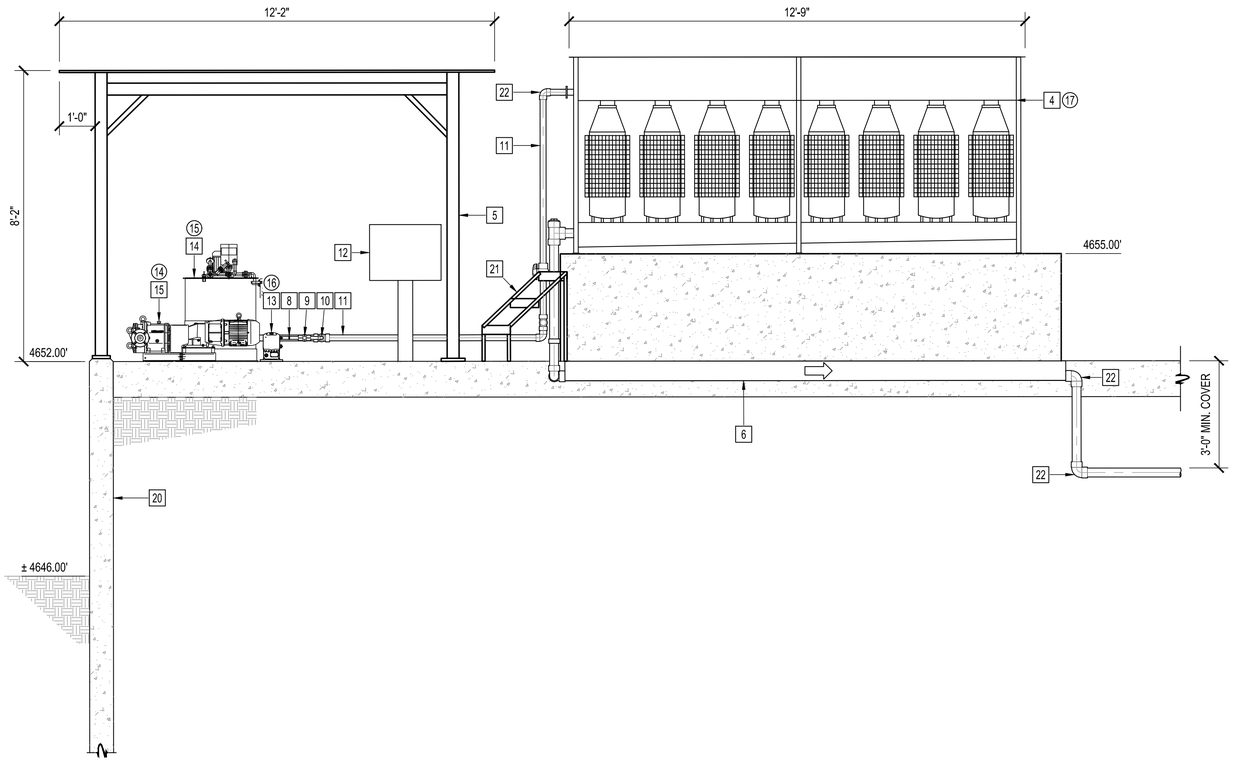

MECHANICAL SECTION B
SCALE: 1/2"=1'-0"

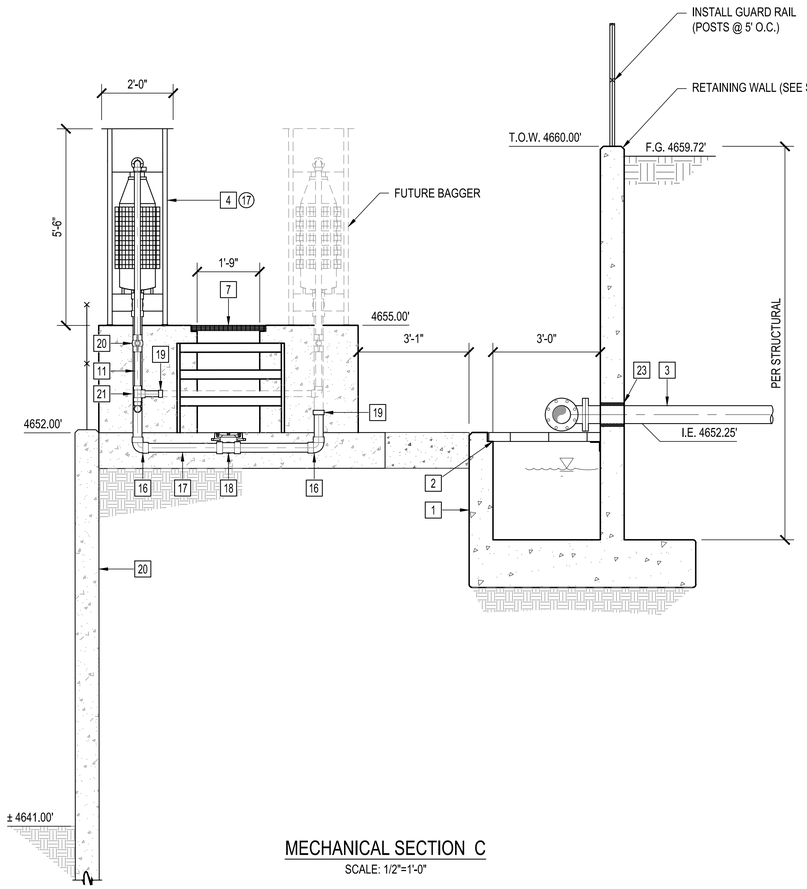

MECHANICAL SECTION C
SCALE: 1/2"=1'-0"

THESE DRAWINGS ARE THE PROPERTY OF P.A.C.E. AND SHALL NOT BE REPRODUCED IN ANY MANNER NOR BE USED FOR CONSTRUCTION UNLESS STAMPED 'ISSUED FOR CONSTRUCTION'.

NO	BY	DATE	REVISIONS	DATE	APP.

Registered Professional Engineer (Civil) CERTIFICATE NO. 70097 TAYLOR B. PIERCE Signed STATE OF ARIZONA, U.S.A. Expires 12/31/28

PREPARED BY: PACE
DESIGNED BY: NE
DRAWN BY: DS, WW
CHECKED BY: TP
SCALE: AS NOTED
DATE: NOV 2025
JOB NO. B614

DEWATERING SECTION

TITLE

JOB
TOWN OF JEROME
WASTEWATER
TREATMENT PLANT
YAVAPAI CO. AZ

100% ISSUED FOR BID

PREPARED BY:
PACE
Advanced Water Engineering
8723 E. VIA de VENTURA, SUITE 290 | SCOTTSDALE, CA 85258
P: (480) 991-3995 | www.paceaz.com
TAYLOR B. PIERCE R.C.E 70097 DATE

SHEET
M4.2
40 OF 99 SHEETS

JOB NO. B614

W:\B614\Engineering\B614-30sheets\B614 - M4.0 CCC MECH PLAN AND SECTIONS.dwg - Tab: SECTION 2 - by reddington on 03/02/26 at 9:58:43 AM

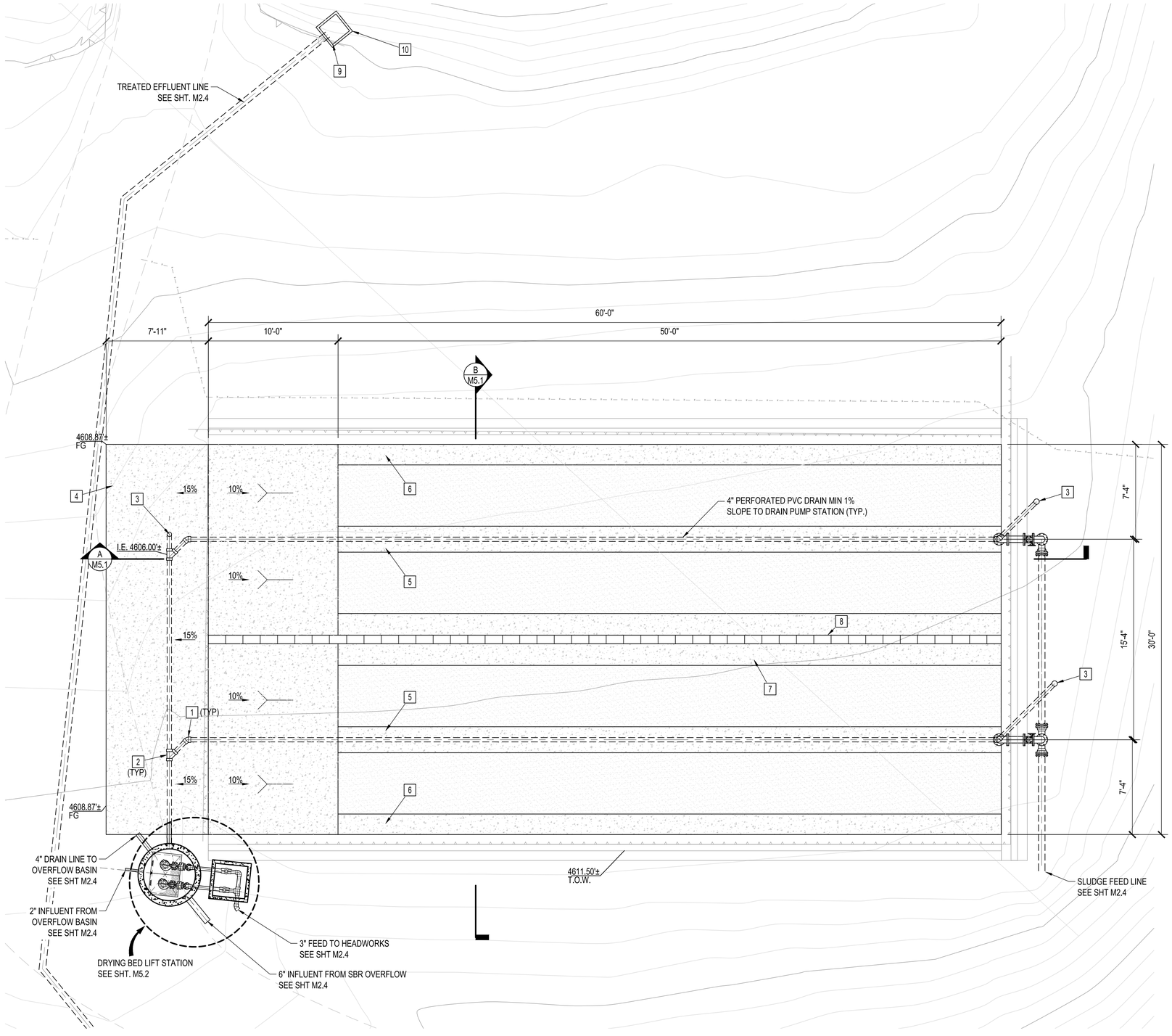

SLUDGE DRYING BED
PLAN VIEW
SCALE: 1/4" = 1'-0"

CONSTRUCTION NOTES:

1. INSTALL 4" - 45° SDR35 PVC BEND.
2. INSTALL 4"x4" SDR35 PVC WYE.
3. INSTALL 4" CLEANOUT PER DETAIL I SHEET M8.3.
4. INSTALL 8" THICK CONCRETE RAMP W #5 AT 12" O.C. EACH WAY, BOTTOM OVER 6" ABC.
5. INSTALL 2'-0" WIDE x8" THICK CONCRETE SLAB W/ 3 #5 CONT. AND #5 AT 16" O.C. TRANS., BOTTOM. TYPICAL OF 2.
6. INSTALL 1'-7" WIDE x8" THICK CONCRETE SLAB W/ 2 #5 CONT. AND #5 AT 16" O.C. TRANS., BOTTOM. TYPICAL OF 2.
7. INSTALL 3'-10" WIDE x12" THICK CONCRETE SLAB W/ 6 #5 CONT. AND #5 AT 16" O.C. TRANS., BOTTOM.
8. INSTALL CMU BLOCK WALL, #5 VERTICAL W/ DOWEL INTO CONCRETE PAD AT 48" O.C. ALTERNATING, GROUT WALL SOLID.
9. INSTALL AUTOSAMPLER, PROVIDED BY TOWN.
10. INSTALL 2'x2'x2' CATCH BASIN TYPE G W/ SINGLE GRATE AND 6" INLET/OUTLET.

NOTES:

1. SLOPE GRADE MIN. 5:1 AWAY AS NEEDED AROUND ENTIRE PERIMETER.
2. PROTECT IN PLACE EXISTING ROADWAY BARRIERS.

NO	BY	DATE	REVISIONS	DATE	APP.

Registered Professional Engineer (Civil)
CERTIFICATE NO.
Timothy B. Pierce
Signed
ARIZONA, U.S.A.
Expires 12/31/28

PREPARED BY: PACE
DESIGNED BY: NE
DRAWN BY: DS, WW
CHECKED BY: TP
SCALE: AS NOTED
DATE: NOV 2025
JOB NO.: B614

THESE DRAWINGS ARE THE PROPERTY OF P.A.C.E. AND SHALL NOT BE REPRODUCED IN ANY MANNER NOR BE USED FOR CONSTRUCTION UNLESS STAMPED 'ISSUED FOR CONSTRUCTION'.

TITLE
SLUDGE DRYING BEDS PLAN

100% ISSUED FOR BID

JOB
TOWN OF JEROME
WASTEWATER
TREATMENT PLANT
YAVAPAI CO. AZ

PREPARED BY:
PACE
Advanced Water Engineering
8723 E. Via de Commercio, Suite 1, Scottsdale, AZ 85258
P: (480) 991-3995 | www.pacewater.com
TAYLOR B. PIERCE R.C.E 70097 DATE

SHEET
M5.0
41 OF 99 SHEETS

JOB NO. B614

W:\B614\Engineering\B614-30\sheets\B614 - M5.0 SLUDGE DRYING BEDS PLAN.dwg - Tab: M5.0 - by neddington on 11/19/25 at 3:14:09 PM

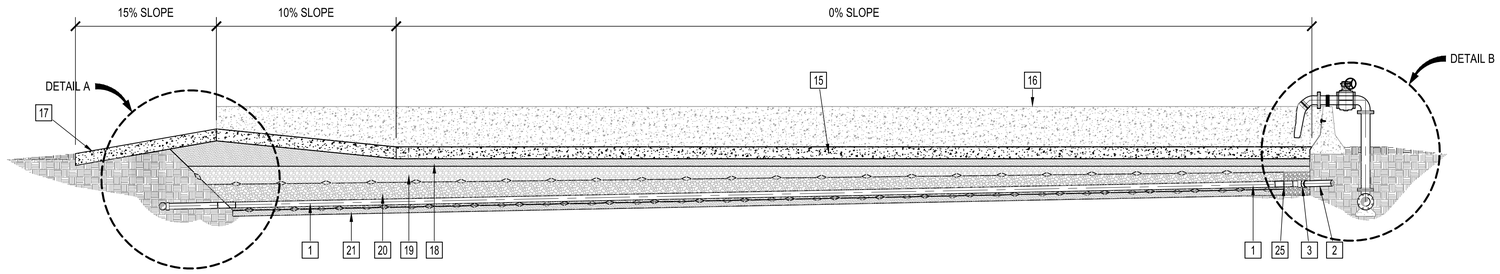

SLUDGE DRYING BED
SECTION - A
SCALE: 1/4" = 1'-0"

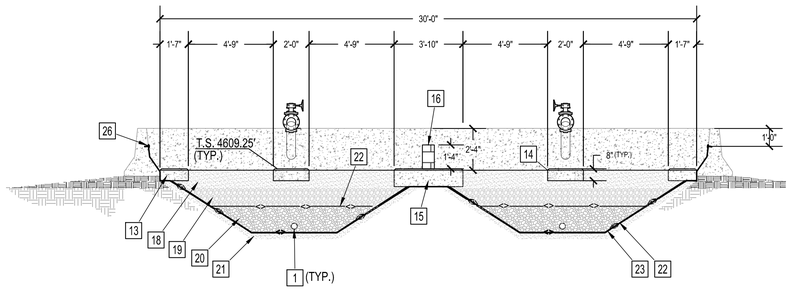

SLUDGE DRYING BED
SECTION - B
SCALE: 1/4" = 1'-0"

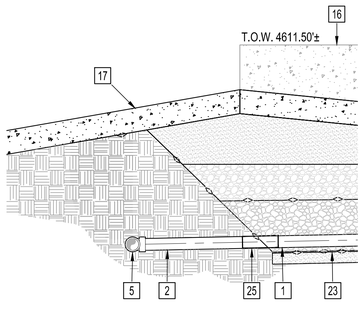

SLUDGE DRYING BED
DETAIL - A
SCALE: 1/2" = 1'-0"

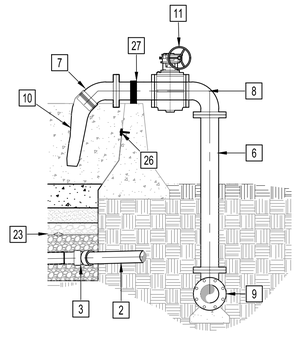

SLUDGE DRYING BED
DETAIL - B
SCALE: 1/2" = 1'-0"

CONSTRUCTION NOTES:

1. INSTALL 4" SDR 35 PVC PERFORATED PIPE.
2. INSTALL 4" SDR 35 PVC PIPE.
3. INSTALL 4" - 45° SDR35 PVC BEND.
4. INSTALL 4" - 90° LONG RADIUS SDR 35 PVC BEND.
5. INSTALL 4" SDR 35 PVC WYE.
6. INSTALL 6" D.I. PIPE.
7. INSTALL 6" - 45° D.I. BEND (FLG'D).
8. INSTALL 6" - 90° D.I. BEND (FLG'D).
9. INSTALL 6"x6"x6" D.I. TEE MJ x FLG'D CONNECTIONS W/ THRUST BLOCK PER DETAIL C SHEET M8.4.
10. INSTALL 6" RUBBER SKIRT W/ SS CLAMPS.
11. INSTALL 6" PLUG VALVE W/ HANDWHEEL.
12. INSTALL 4" CLEANOUT PER DETAIL I SHEET M8.3.
13. INSTALL 1'-7" WIDE x8" THICK CONCRETE SLAB W/ 2 #5 CONT. AND #5 AT 16" O.C. TRANS., BOTTOM. TYPICAL OF 2.
14. INSTALL 2'-0" WIDE x8" THICK CONCRETE SLAB W/ 3 #5 CONT. AND #5 AT 16" O.C. TRANS., BOTTOM. TYPICAL OF 2.
15. INSTALL 3'-10" WIDE x12" THICK CONCRETE SLAB W/ 6 #5 CONT. AND #5 AT 16" O.C. TRANS., BOTTOM.
16. INSTALL CMU BLOCK WALL, #5 VERTICAL W/ DOWEL INTO CONCRETE PAD AT 48" O.C. ALTERNATING, GROUT WALL SOLID.
17. INSTALL 8" THICK CONCRETE RAMP W #5 AT 12" O.C. EACH WAY, BOTTOM OVER 6" ABC.
18. INSTALL 12" SAND LAYER.
19. INSTALL 4-8 mm FINE GRAVEL.
20. INSTALL 1'-6" DEEP ¾" CRUSHED ROCK.
21. INSTALL 4" GRANULAR SAND LAYER.
22. INSTALL 100 mm GEOTEXTILE FABRIC PER SPECS.
23. INSTALL FLEXIBLE POLYPROPYLENE LINER PER SPECS.
24. INSTALL ANCHOR TRENCH PER DETAIL D SHEET M8.3.
25. INSTALL PIPE BOOT PER LINER MANUFACTURER RECOMMENDATIONS AND DETAIL E SHEET M8.3.
26. INSTALL HDPE LINER ANCHOR BOLT, ANCHOR TO EXISTING WALLS PER DETAIL C SHEET M8.3.
27. PIPE SUPPORT / STRAP

NOTES:

1. SLOPE GRADE MIN. 5:1 AWAY AS NEEDED AROUND ENTIRE PERIMETER.
2. PROTECT IN PLACE EXISTING ROADWAY BARRIERS.

NO	BY	DATE	REVISIONS	DATE	APP.

THESE DRAWINGS ARE THE PROPERTY OF P.A.C.E. AND SHALL NOT BE REPRODUCED IN ANY MANNER NOR BE USED FOR CONSTRUCTION UNLESS STAMPED 'ISSUED FOR CONSTRUCTION'.

Registered Professional Engineer (Civil) CERTIFICATE NO. 70097 TAYLOR B. PIERCE Signed ARIZONA, U.S.A. Expires 12/31/28

PREPARED BY:	PACE		
DESIGNED BY:	NE		
DRAWN BY:	DS, WW		
CHECKED BY:	TP	SCALE:	AS NOTED
DATE	NOV 2025		
JOB NO.	B614		

TITLE: **SLUDGE DRYING BEDS SECTIONS**

JOB: TOWN OF JEROME WASTEWATER TREATMENT PLANT — YAVAPAI CO. AZ

100% ISSUED FOR BID

PREPARED BY:
PACE
Advanced Water Engineering
ARIZONA OFFICE: 8123 E. VIA DE COMERCIO, SUITE A-1, SCOTTSDALE, CA 85258
P: (480) 991-3595 | www.pacewater.com
TAYLOR B. PIERCE R.C.E 70097 DATE

SHEET
M5.1
42 OF 99 SHEETS

JOB NO. B614

W:\B614\Engineering\B614-3\Sheets\B614 - M5.0 SLUDGE DRYING BEDS PLAN.dwg - Tab: M5.1 - by maddington on 11/18/25 at 3:14:09 PM

CONSTRUCTION NOTES:

1. INSTALL 3" SCH. 80 PVC PIPE.
2. INSTALL 3" - 45° SCH. 80 PVC BEND.
3. INSTALL 3" - 90° DIP BEND.
4. INSTALL 3" SCH. 80 PVC TEE.
5. INSTALL 3" DIP PLUG VALVE.
6. INSTALL 3" DIP SWING CHECK VALVE.
7. INSTALL S.S PIPE SUPPORT PER DETAIL A SHEET M8.5.
8. INSTALL SUBMERSIBLE PUMP.
9. INSTALL 24"x36" ACCESS HATCH.
10. INSTALL LEVEL FLOAT ASSEMBLY AND SUPPORT STEM PER MANUFACTURER RECOMMENDATIONS.
11. INSTALL PUMP GUIDE RAIL SYSTEM PER MANUFACTURER RECOMMENDATIONS.
12. INSTALL PIPE PENETRATION PER DETAIL G SHEET M8.4.
13. INSTALL PRECAST 3' x 3' x 2' CONCRETE VAULT W/ ACCESS HATCH.
14. INSTALL 3" S.S. PIPE WELL AIR VENT PIPE W/ #20 MESH BUG SCREEN.
15. INSTALL 3+ PVC FLANGE ADAPTER.
16. INSTALL 3" - 90° DIP BEND.
17. INSTALL 3" DIP.
18. INSTALL PVC FLANGE ADAPTER.
19. COAT LIFT STATION AND PIPING FOR SEVERE H_2S CORROSION PER COATING SPECIFICATIONS
20. SUBGRADE PER GEOTECH REPORT

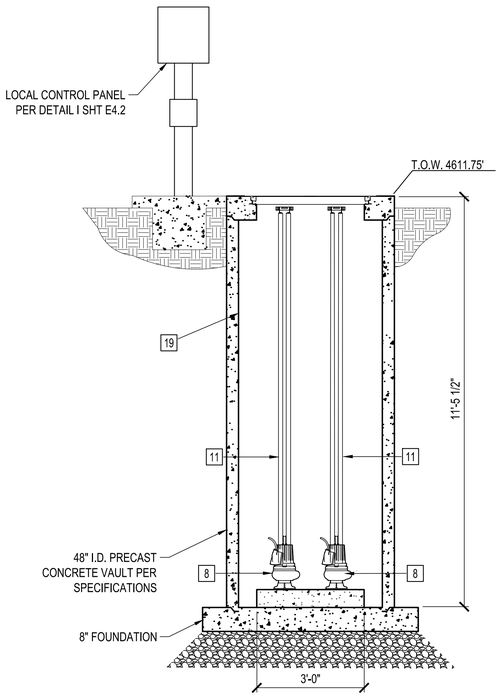

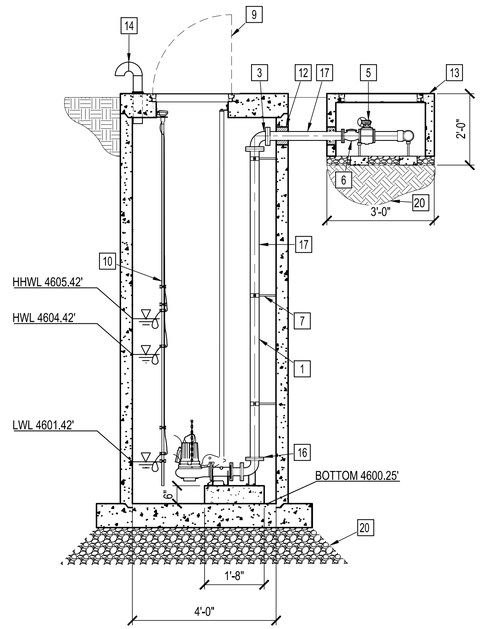

DRYING BED LIFT STATION
SECTIONS
SCALE: 1/2" = 1'-0"

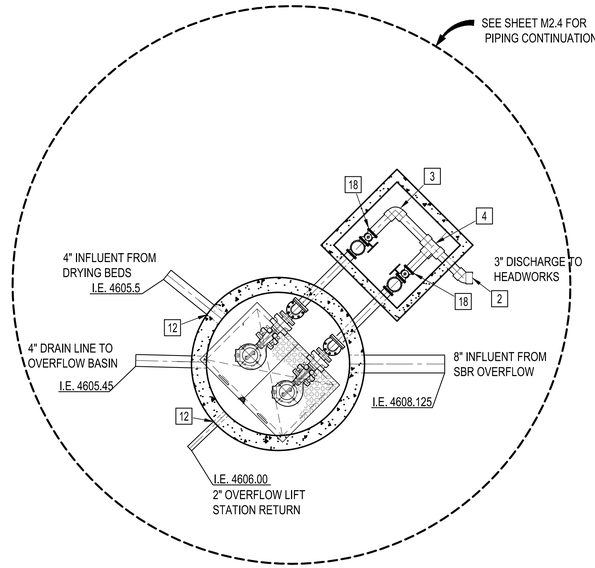

DRYING BED LIFT STATION
PLAN VIEW
SCALE: 1/2" = 1'-0"

NO	BY	DATE	REVISIONS	DATE	APP.

Registered Professional Engineer (Civil)
CERTIFICATE NO. 70097
TAYLOR B. PIERCE
Signed
ARIZONA, U.S.A.
Expires 12/31/28

PREPARED BY: PACE
DESIGNED BY: NE
DRAWN BY: DS, WW
CHECKED BY: TP
SCALE: AS NOTED
DATE: NOV 2025
JOB NO.: B614

THESE DRAWINGS ARE THE PROPERTY OF P.A.C.E. AND SHALL NOT BE REPRODUCED IN ANY MANNER NOR BE USED FOR CONSTRUCTION UNLESS STAMPED 'ISSUED FOR CONSTRUCTION'.

100% ISSUED FOR BID

TITLE: DRYING BED LIFT STATION SECTIONS

JOB: TOWN OF JEROME
WASTEWATER
TREATMENT PLANT
YAVAPAI CO. AZ

PREPARED BY:
PACE
Advanced Water Engineering
8723 E. VIA DE COMMERCIO, SUITE 1-A, SCOTTSDALE, CA 85258
P: (480) 991-3595 | www.pacewater.com
TAYLOR B. PIERCE R.C.E 70097 DATE

SHEET
M5.2
43 OF 99 SHEETS

JOB NO. B614

W:\B614\Engineering\B614-3\Sheets\B614 - M5.0 SLUDGE DRYING BEDS PLAN.dwg - Tab: M5.2 - by noddington on 11/19/25 at 3:14:09 PM

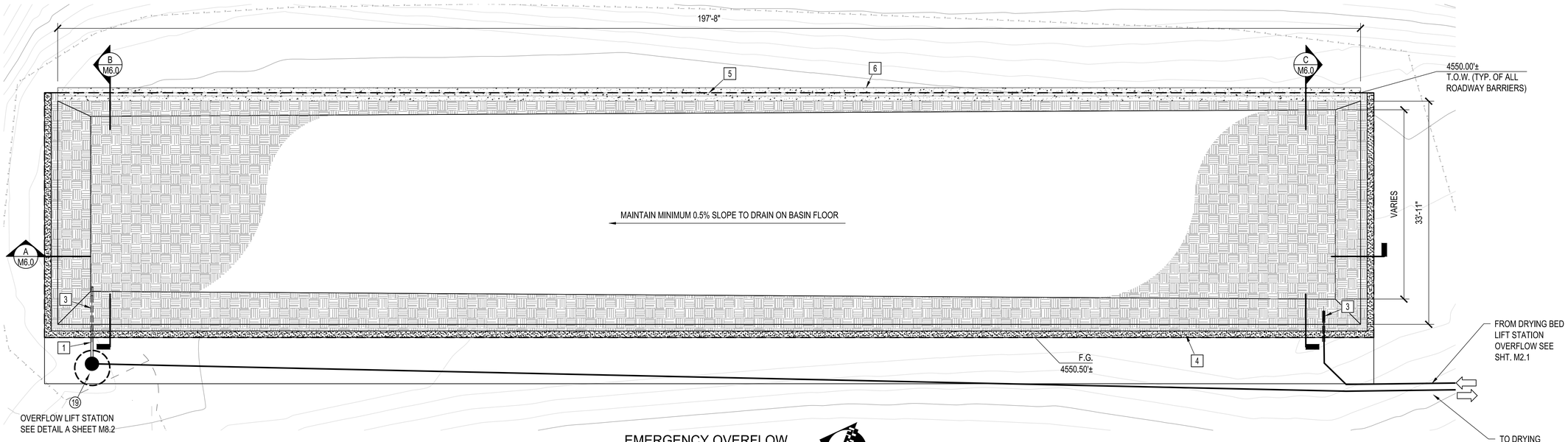

EMERGENCY OVERFLOW
BASIN PLAN VIEW
SCALE: 1/8" = 1'-0"

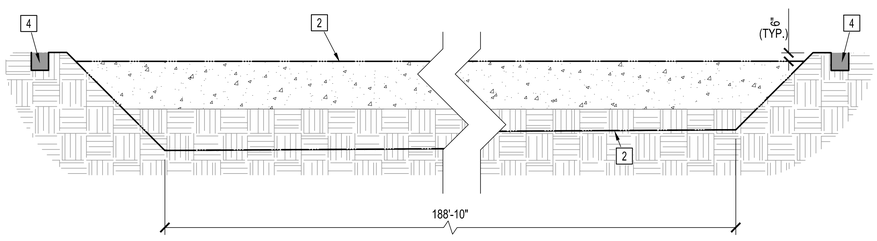

EMERGENCY OVERFLOW BASIN
SECTION - A
SCALE: 1/4" = 1'-0"

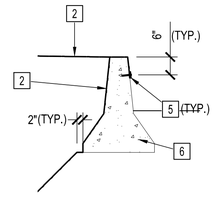

EMERGENCY OVERFLOW BASIN
DETAIL - A
SCALE: 1/2" = 1'-0"

CONSTRUCTION NOTES:

1. INSTALL 4" SDR 35 PVC PIPE.
2. INSTALL HDPE LINER PER SPECIFICATION 31 05 19.16.
3. INSTALL PIPE BOOT PER LINER MANUFACTURER RECOMMENDATIONS AND DETAIL E SHEET M8.3.
4. INSTALL ANCHOR TRENCH PER DETAIL D SHEET M8.3.
5. INSTALL HDPE LINER ANCHOR BOLT, ANCHOR TO EXISTING WALLS PER DETAIL C. SHEET M8.3.
6. PROTECT IN PLACE EXISTING ROADWAY BARRIERS.

NOTES:

1. GRADE ALL BASIN WALLS WITH 1:1 SLOPE TO BASIN FLOOR.
2. SLOPE GRADE MIN 5:1 AWAY AS NEEDED AROUND ENTIRE PERIMETER.
3. CONTRACTOR TO RELOCATE EXISTING ROADWAY BARRIERS FROM ABANDONED BASIN AS NEEDED.

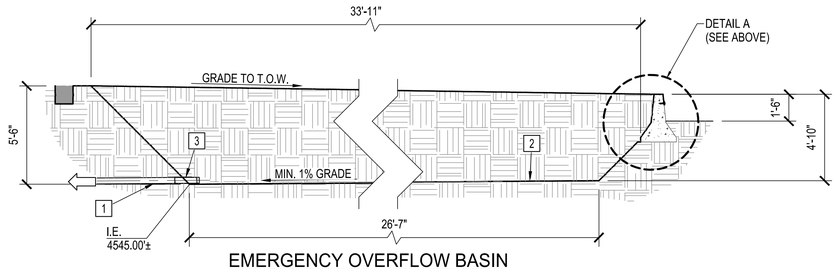

EMERGENCY OVERFLOW BASIN
SECTION - B
SCALE: 1/4" = 1'-0"

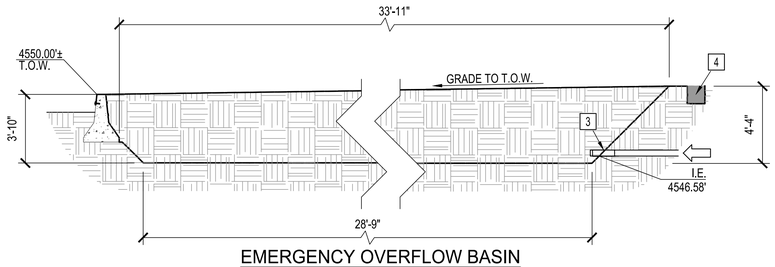

EMERGENCY OVERFLOW BASIN
SECTION - C
SCALE: 1/4" = 1'-0"

NO	BY	DATE	REVISIONS	DATE	APP.

THESE DRAWINGS ARE THE PROPERTY OF P.A.C.E. AND SHALL NOT BE REPRODUCED IN ANY MANNER NOR BE USED FOR CONSTRUCTION UNLESS STAMPED 'ISSUED FOR CONSTRUCTION'.

Registered Professional Engineer (Civil)
CERTIFICATE NO. 70097
TAYLOR B. PIERCE
Signed
ARIZONA, U.S.A.
Expires 12/31/28

PREPARED BY: PACE
DESIGNED BY: NE
DRAWN BY: DS, WW
CHECKED BY: TP
SCALE: AS NOTED
DATE: NOV 2025
JOB NO.: B614

TITLE: EMERGENCY OVERFLOW BASIN PLAN AND SECTIONS

JOB: TOWN OF JEROME WASTEWATER TREATMENT PLANT — YAVAPAI CO. AZ

100% ISSUED FOR BID

PREPARED BY: TAYLOR B. PIERCE — R.C.E 70097 — DATE

PACE
Advanced Water Engineering
8723 E. VIA DE VENTURA, SUITE A-100, SCOTTSDALE, CA 85258
P: (480) 991-3995 | www.paceaz.com

SHEET
M6.0
44 OF 99 SHEETS

JOB NO. B614

W:\B614\Engineering\B614-30sheets\B614 - M6.0 EMERGENCY OVERFLOW STORAGE PLAN.dwg - Tab: M6.0 - by reddington on 11/19/25 at 2:37:31 PM

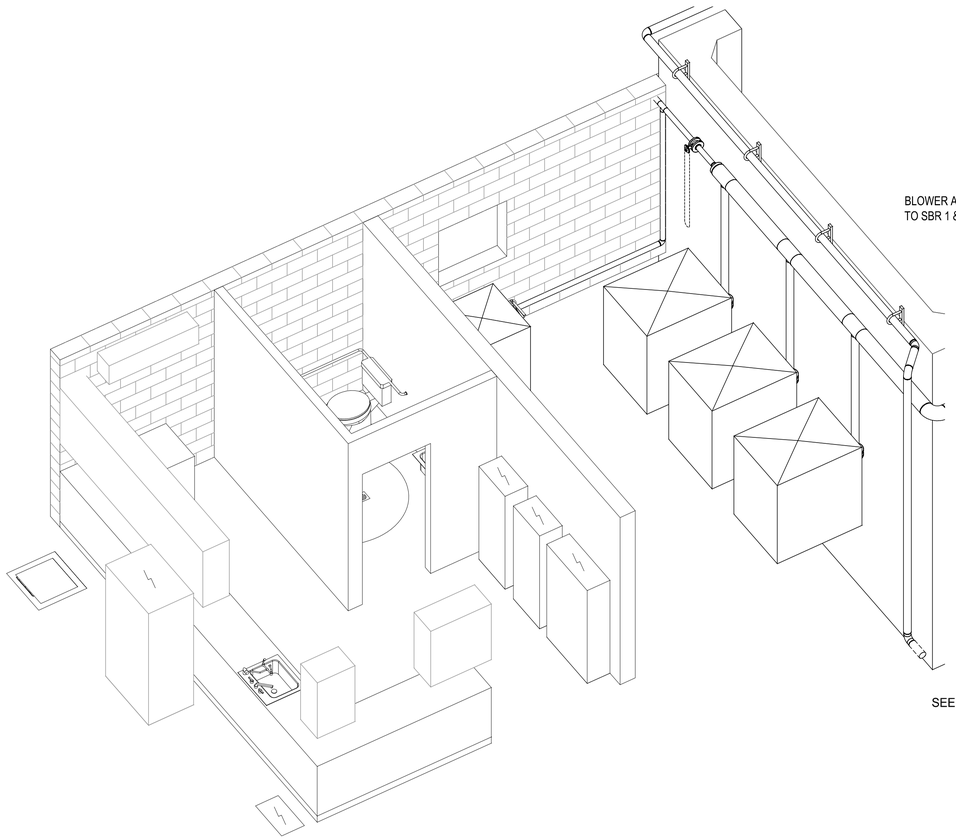

ISOMETRIC VIEW - NE
SCALE: N.T.S.

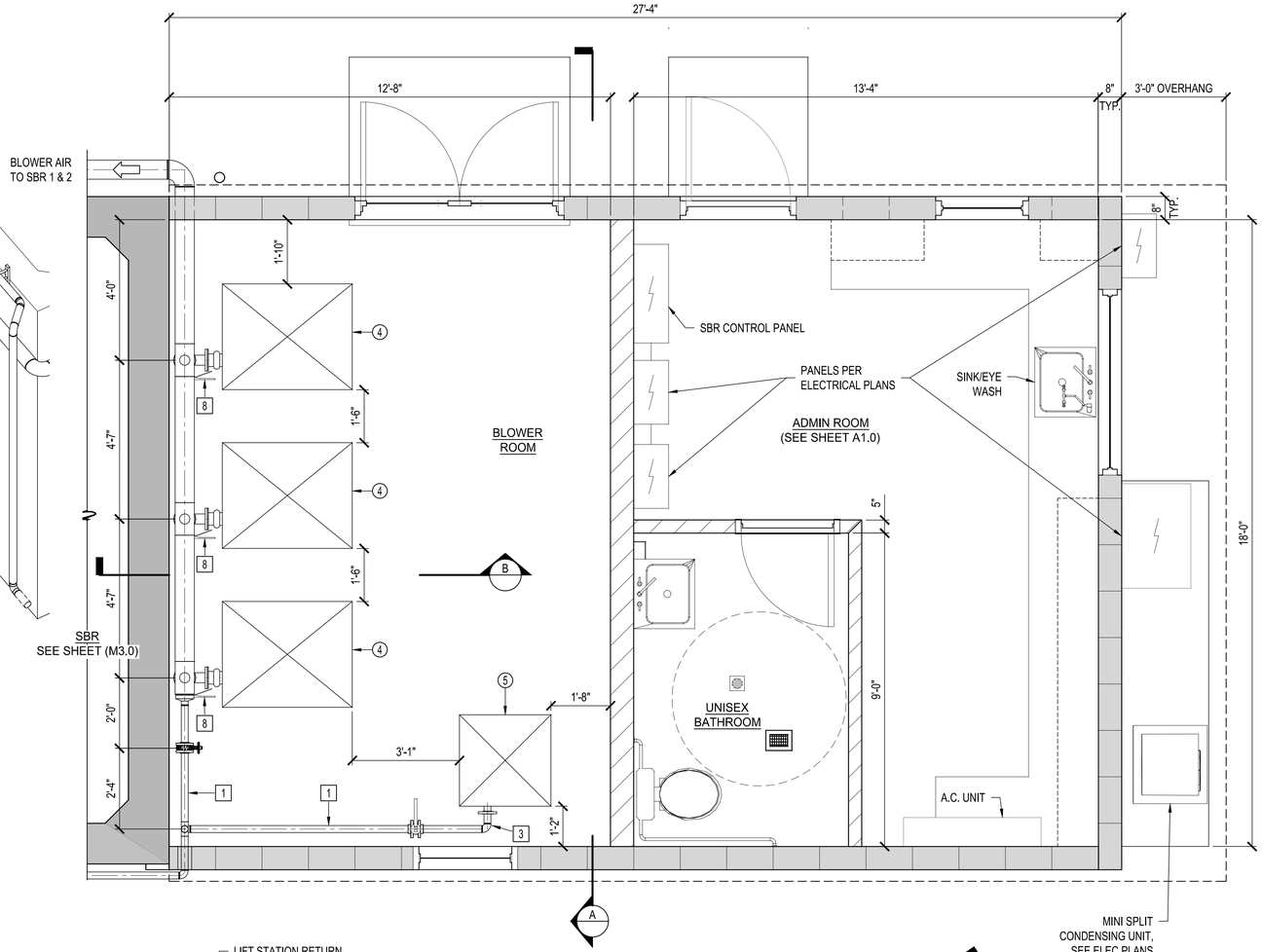

MECHANICAL PLAN - ABOVE
SCALE: 1/2" = 1'-0"

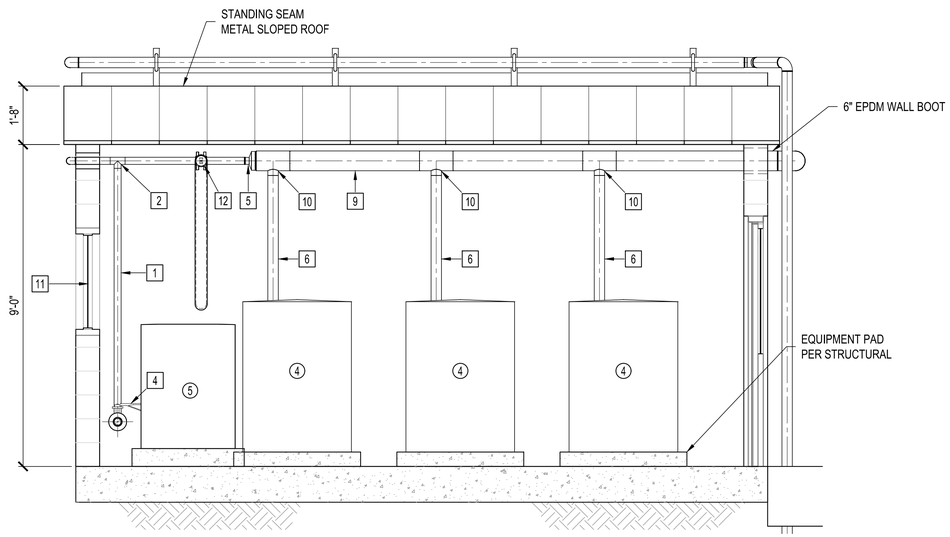

SECTION-A
SCALE: 1/2" = 1'-0"

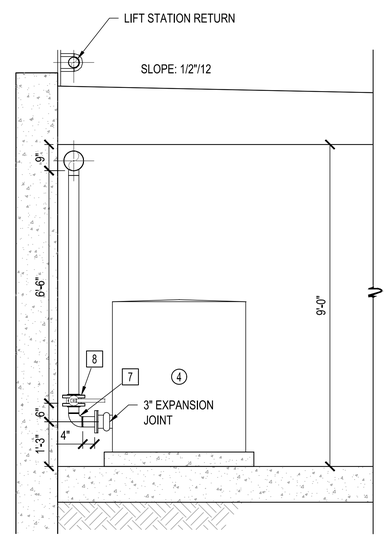

SECTION-B
SCALE: 1/2" = 1'-0"

CONSTRUCTION NOTES:

1. INSTALL 2" SCH. 10 CARBON STEEL PIPE.
2. INSTALL 2" SCH. 10 CARBON STEEL TEE.
3. INSTALL 2" - 90° SCH. 10 CARBON STEEL BEND
4. INSTALL 2" BUTTERFLY VALVE.
5. INSTALL 6"x2" SCH. 10 CARBON STEEL REDUCER.
6. INSTALL 3" SCH. 10 CARBON STEEL PIPE.
7. INSTALL 3" - 90° SCH. 10 CARBON STEEL BEND.
8. INSTALL 3" BUTTERFLY VALVE.
9. INSTALL 6" SCH. 10 CARBON STEEL PIPE.
10. INSTALL 6"x3"x6" SCH. 10 CARBON STEEL TEE.
11. INSTALL 3'x3' ACOUSTICAL LOUVER PER SPECIFICATION 08 9100.
12. INSTALL 2" BUTTERFLY VALVE WITH CHAIN WHEEL

NO	BY	DATE	REVISIONS	DATE	APP.

Registered Professional Engineer (Civil)
CERTIFICATE NO. 70097
Timothy R. Pierce
Signed
ARIZONA, U.S.A.
Expires 12/31/28

PREPARED BY: PACE
DESIGNED BY: NE
DRAWN BY: DS, WW
CHECKED BY: TP
SCALE: AS NOTED
DATE: NOV 2025
JOB NO.: B614

THESE DRAWINGS ARE THE PROPERTY OF P.A.C.E. AND SHALL NOT BE REPRODUCED IN ANY MANNER NOR BE USED FOR CONSTRUCTION UNLESS STAMPED 'ISSUED FOR CONSTRUCTION'.

TITLE: **BLOWER OPS PLAN**

JOB: TOWN OF JEROME
WASTEWATER
TREATMENT PLANT
YAVAPAI CO. AZ

100% ISSUED FOR BID

PREPARED BY: TAYLOR B. PIERCE R.C.E 70097 DATE
PACE
Advanced Water Engineering
8723 E. Vía de Commercio, Suite 2-104, SCOTTSDALE, CA 85258
P: (408) 991-3595 | www.pacewater.com

SHEET
M7.0
45 OF 99 SHEETS

JOB NO. B614

W:\B614-Engineering\B614-03\sheets\B614 - M7.0 BLOWER OPS PLAN AND SECTIONS.dwg - Tab: M7.0 - by reddington on 11/21/25 at 12:21:09 PM

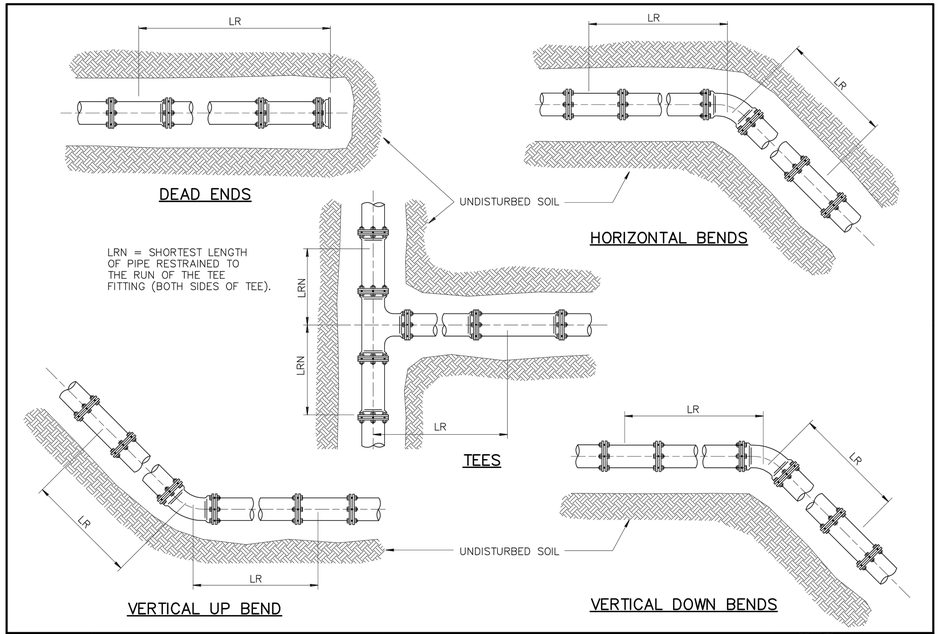

DETAIL NO.	STANDARD DETAIL	JOINT RESTRAINT FOR DUCTILE IRON, POLYETHYLENE WRAPPED DUCTILE IRON AND PVC WATER PIPES	REVISED	DETAIL NO.
303–1	MARICOPA ASSOCIATION of GOVERNMENTS ENGLISH		01–01–2019	303–1

M.A.G. STANDARD DETAIL #303-1

N.T.S. | A

RESTRAINED LENGTHS, LR, FOR DUCTILE IRON PIPE

NOMINAL PIPE SIZE INCHES	HORIZONTAL BENDS			TEES		VERTICAL OFFSETS						DEAD ENDS
						90° BEND FITTINGS		45° BEND FITTINGS		22–1/2° BEND FITTINGS		
	90°	45°	22–1/2°	LRN=0'	LRN=10'	DOWN BEND	UP BEND	DOWN BEND	UP BEND	DOWN BEND	UP BEND	
4	18	7	4	30	8	31	18	13	7	6	3	31
6	25	10	5	43	20	44	25	18	10	9	5	44
8	32	13	6	56	34	58	32	24	13	11	6	58
10	38	16	8	68	45	69	38	29	16	14	8	69
12	45	19	9	80	57	81	45	34	19	16	9	81
14	51	21	10	91	68	92	51	38	21	18	10	92
16	57	24	11	103	79	104	57	43	24	21	11	104
18	62	26	12	113	90	115	62	48	26	23	12	115
20	68	28	14	125	100	126	68	52	28	25	14	126
24	79	33	16	145	121	147	79	61	33	29	16	147

RESTRAINED LENGTHS, LR, FOR DUCTILE IRON WITH POLYETHYLENE WRAP AND PVC PIPE

NOMINAL PIPE SIZE INCHES	HORIZONTAL BENDS			TEES		VERTICAL OFFSETS						DEAD ENDS
						90° BEND FITTINGS		45° BEND FITTINGS		22–1/2° BEND FITTINGS		
	90°	45°	22–1/2°	LRN=0'	LRN=10'	DOWN BEND	UP BEND	DOWN BEND	UP BEND	DOWN BEND	UP BEND	
4	26	11	5	69	18	72	26	30	11	14	5	72
6	36	15	7	99	47	102	36	42	15	20	7	102
8	47	19	9	130	78	133	47	55	19	26	9	133
10	56	23	11	157	103	159	56	66	23	32	11	159
12	65	27	13	185	131	187	65	77	27	37	13	187
14	74	31	15	211	156	214	74	89	31	42	15	214
16	82	34	16	238	183	241	82	100	34	48	16	241
18	90	37	18	263	207	266	90	110	38	53	18	266
20	98	41	20	289	233	292	98	121	41	58	20	292
24	113	47	22	337	280	340	113	141	47	68	22	340

NOTES:

1. ALL JOINTS WITHIN THE SPECIFIED LENGTH LR MUST BE RESTRAINED. ALL LENGTHS ARE GIVEN IN FEET.
2. THE MAXIMUM TEST PRESSURE SHALL NOT EXCEED 200 PSI
3. THE MINIMUM DEPTH OF BURY SHALL BE 3' TO TOP OF PIPE.
4. RESTRAINED LENGTHS MAY BE REDUCED WHEN SUPPORTED BY ENGINEERING CALCULATIONS.

DETAIL NO.	STANDARD DETAIL	JOINT RESTRAINT FOR DUCTILE IRON, POLYETHYLENE WRAPPED DUCTILE IRON AND PVC WATER PIPES	REVISED	DETAIL NO.
303–2	MARICOPA ASSOCIATION of GOVERNMENTS ENGLISH		01–01–2019	303–2

M.A.G. STANDARD DETAIL #303-2

N.T.S. | B

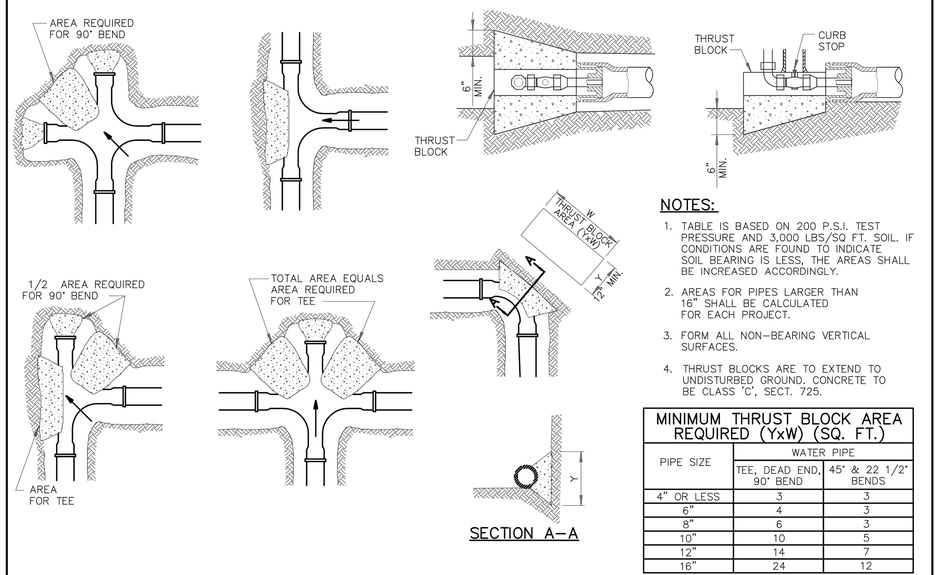

NOTES:

1. TABLE IS BASED ON 200 P.S.I. TEST PRESSURE AND 3,000 LBS/SQ FT. SOIL. IF CONDITIONS ARE FOUND TO INDICATE SOIL BEARING IS LESS, THE AREAS SHALL BE INCREASED ACCORDINGLY.
2. AREAS FOR PIPES LARGER THAN 16" SHALL BE CALCULATED FOR EACH PROJECT.
3. FORM ALL NON–BEARING VERTICAL SURFACES.
4. THRUST BLOCKS ARE TO EXTEND TO UNDISTURBED GROUND. CONCRETE TO BE CLASS 'C', SECT. 725.

MINIMUM THRUST BLOCK AREA REQUIRED (YxW) (SQ. FT.)		
PIPE SIZE	WATER PIPE	
	TEE, DEAD END, 90° BEND	45° & 22 1/2° BENDS
4" OR LESS	3	3
6"	4	3
8"	6	3
10"	10	5
12"	14	7
16"	24	12

DETAIL NO.	STANDARD DETAIL	THRUST BLOCKS FOR WATER LINES	REVISED	DETAIL NO.
380	MARICOPA ASSOCIATION of GOVERNMENTS ENGLISH		01–01–1998	380

M.A.G. STANDARD DETAIL #380

N.T.S. | C

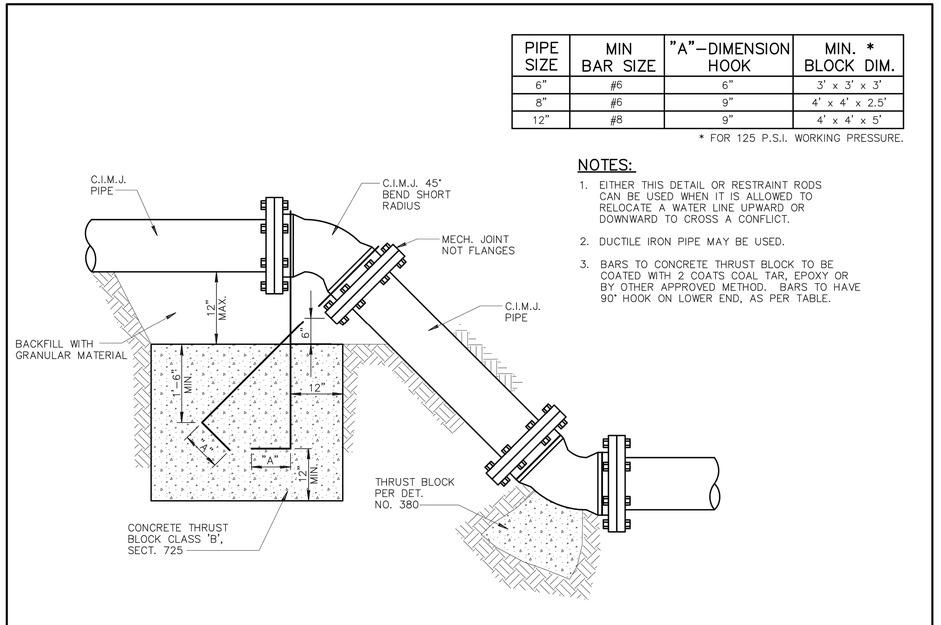

PIPE SIZE	MIN BAR SIZE	"A"–DIMENSION HOOK	MIN. * BLOCK DIM.
6"	#6	6"	3' x 3' x 3'
8"	#6	9"	4' x 4' x 2.5'
12"	#8	9"	4' x 4' x 5'

* FOR 125 P.S.I. WORKING PRESSURE.

NOTES:

1. EITHER THIS DETAIL OR RESTRAINT RODS CAN BE USED WHEN IT IS ALLOWED TO RELOCATE A WATER LINE UPWARD OR DOWNWARD TO CROSS A CONFLICT.
2. DUCTILE IRON PIPE MAY BE USED.
3. BARS TO CONCRETE THRUST BLOCK TO BE COATED WITH 2 COATS COAL TAR, EPOXY OR BY OTHER APPROVED METHOD. BARS TO HAVE 90° HOOK ON LOWER END, AS PER TABLE.

DETAIL NO.	STANDARD DETAIL	ANCHOR BLOCKS FOR VERTICAL BENDS	REVISED	DETAIL NO.
381	MARICOPA ASSOCIATION of GOVERNMENTS ENGLISH		01–01–1998	381

M.A.G. STANDARD DETAIL #381

N.T.S. | D

NO	BY	DATE	REVISIONS	DATE	APP.

Registered Professional Engineer (Civil) CERTIFICATE NO. 70097 Timothy B. Pace Signed ARIZONA, U.S.A. Expires 12/31/28

PREPARED BY:	PACE
DESIGNED BY:	NE
DRAWN BY:	DS, WW
CHECKED BY:	TP
SCALE:	AS NOTED
DATE	NOV 2025
JOB NO.	B614

THESE DRAWINGS ARE THE PROPERTY OF P.A.C.E. AND SHALL NOT BE REPRODUCED IN ANY MANNER NOR BE USED FOR CONSTRUCTION UNLESS STAMPED 'ISSUED FOR CONSTRUCTION'.

MECHANICAL DETAILS I

TITLE

100% ISSUED FOR BID

JOB TOWN OF JEROME WASTEWATER TREATMENT PLANT YAVAPAI CO. AZ

PREPARED BY: PACE
Advanced Water Engineering
8723 E. Via de Ventura, Suite A-100, SCOTTSDALE, CA 85258
P: (480) 991-3985 | www.pacewater.com
TAYLOR B. PIERCE R.C.E 70097 DATE

SHEET M8.0 46 OF 99 SHEETS

JOB NO. B614

W:\B614\Engineering\B614-30sheet\B614 - M8.0 MECHANICAL DETAILS.dwg - Tab: M8.0 - by maddington on 02/23/26 at 12:41:49 PM

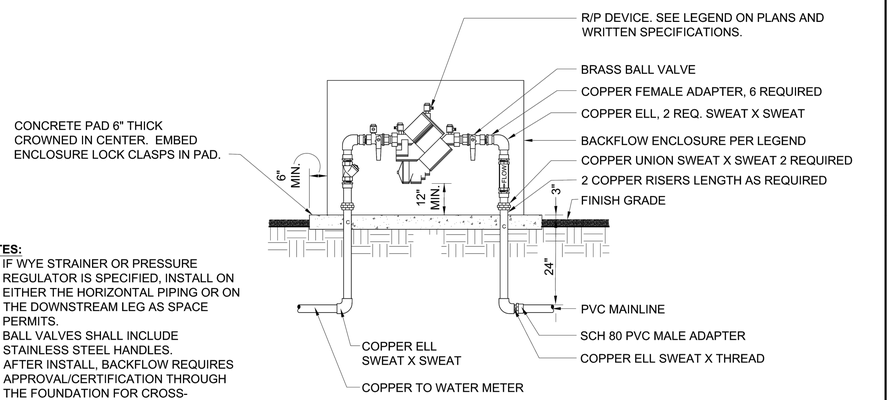

NOTES:

1. IF WYE STRAINER OR PRESSURE REGULATOR IS SPECIFIED, INSTALL ON EITHER THE HORIZONTAL PIPING OR ON THE DOWNSTREAM LEG AS SPACE PERMITS.
2. BALL VALVES SHALL INCLUDE STAINLESS STEEL HANDLES.
3. AFTER INSTALL, BACKFLOW REQUIRES APPROVAL/CERTIFICATION THROUGH THE FOUNDATION FOR CROSS-CONNECTION CONTROL AND HYDRAULIC RESEARCH (USC), OR A THIRD-PARTY CERTIFYING ENTITY THAT IS UNRELATED TO THE PRODUCT'S MANUFACTURER OR VENDOR, THAT IS APPROVED BY THE ARIZONA DEPARTMENT OF ENVIRONMENTAL QUALITY.

DETAIL NO.		STANDARD DETAIL		REVISED	DETAIL NO.
611-1	MARICOPA ASSOCIATION of GOVERNMENTS	ENGLISH	BACKFLOW PREVENTER ASSEMBLY (2" DIA. & SMALLER)	01-01-2023	611-1

M.A.G. STANDARD DETAIL #611-1

N.T.S. | A

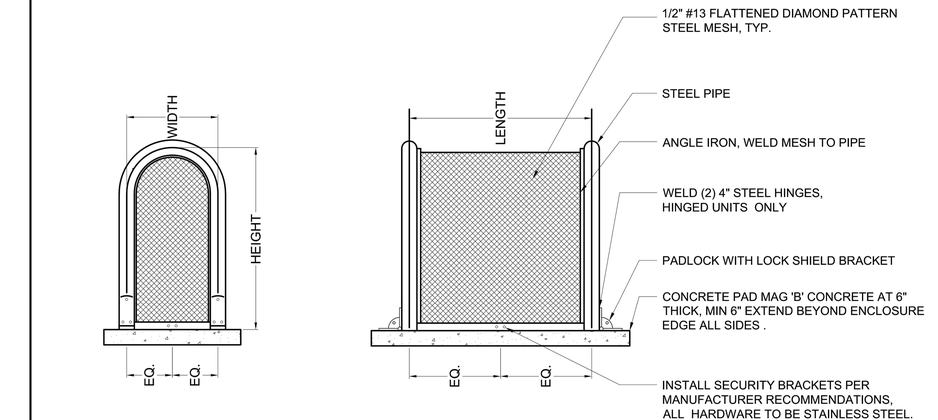

NOTES:

1. ENCLOSURE SHALL BE POWDER COATED BY MANUFACTURER.
2. SEE LEGEND FOR REQUIRED SIZE & COLOR.
3. CONTRACTOR SHALL SUPPLY CONCRETE PAD.

CENTERLINE DIMENSIONS	TYPE
12"W X 18"H X 12"L	LIFT OFF UNIT
12"W X 24"H X 24"L	LIFT OFF UNIT
12"W X 24"H X 32"L	LIFT OFF UNIT
12"W X 24"H X 42"L	HINGED UNIT
12"W X 30"H X 42"L	HINGED UNIT
18"W X 30"H X 48"L	HINGED UNIT

DETAIL NO.		STANDARD DETAIL		REVISED	DETAIL NO.
611-3	MARICOPA ASSOCIATION of GOVERNMENTS	ENGLISH	ENCLOSURE CAGE FOR BACKFLOW PREVENTER	01-01-2023	611-3

M.A.G. STANDARD DETAIL #611-3

N.T.S. | B

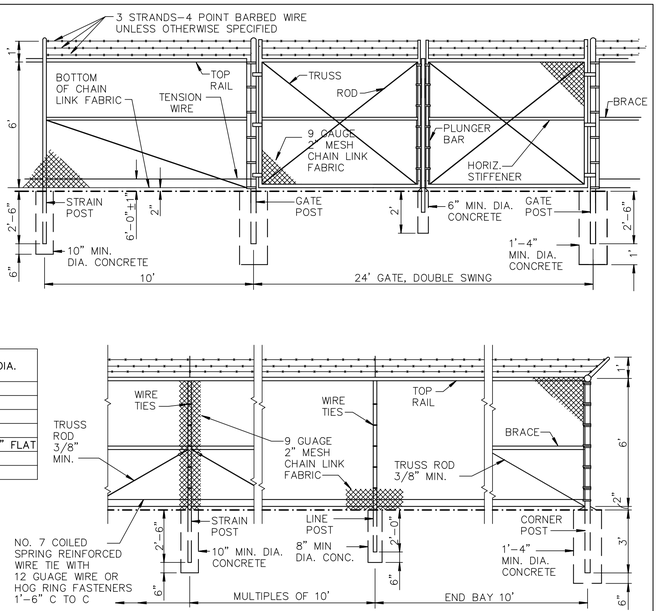

NOTES

1. ALL CONCRETE SHALL BE CLASS 'C' PER SECT. 725.
2. FITTINGS NOT SPECIFICALLY DETAILED SHALL BE HEAVY DUTY DESIGN.
3. STRAIN POSTS SHALL BE SPACED AT 500' MAXIMUM SPACING.
4. BOTH CORNER AND STRAIN POSTS SHALL HAVE STRAIN PANELS.
5. ALL POSTS SHALL BE CAPPED.
6. MEMBER SIZES SHALL BE THE FOLLOWING:

MEMBER	AISC SIZE	OUTSIDE DIA.
CORNER POST	2-1/2"	2.875"
LINE POST	1-1/2"	1.900"
STRAIN POST	1-1/2"	1.900"
BRACE	1-1/4"	1.666"
STRETCH BAR	3/16"x3/4" FLAT	3/16"x3/4" FLAT
GATE POST	3-1/2"	4.000"
TOP RAIL	1-1/4"	1.666"

7. CONSTRUCTION AND MATERIALS SHALL CONFORM TO SECT. 420 AND 772, RESPECTIVELY. SEE TABLE 772-1 FOR WEIGHTS OF MEMBERS.

DETAIL NO.		STANDARD DETAIL		REVISED	DETAIL NO.
160	MARICOPA ASSOCIATION of GOVERNMENTS	ENGLISH	6' CHAIN LINK FENCE AND GATE	01-01-2013	160

M.A.G. STANDARD DETAIL #160

N.T.S. | C

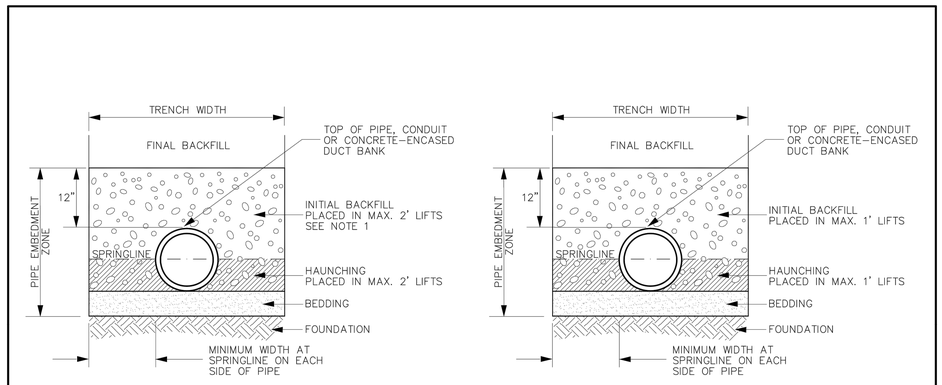

TRENCH-CROSS SECTION DETAIL
RIGID PIPE

TRENCH-CROSS SECTION DETAIL
FLEXIBLE PIPE

NOTES:

1. BEDDING, HAUNCHING AND INITIAL BACKFILL MATERIAL SHALL BE ABC PER SECTION 702. SEE SECTION 601 FOR ALTERNATIVE MATERIALS TO BE USED WITH AGENCY APPROVAL INCLUDING MAXIMUM 1-1/2" NATIVE MATERIAL FOR CONCRETE PIPE INITIAL BACKFILL.
2. SEE SECTION 601 FOR ADDITIONAL TRENCH WIDTH, EXCAVATION, BACKFILLING AND COMPACTION REQUIREMENTS.
3. SEE SECTION 601 FOR PIPE MATERIALS CONSIDERED AS RIGID OR FLEXIBLE.

DETAIL NO.		STANDARD DETAIL		REVISED	DETAIL NO.
200-3	MARICOPA ASSOCIATION of GOVERNMENTS	ENGLISH	TRENCH BACKFILL AND SURFACE REPLACEMENT	01-01-2023	200-3

M.A.G. STANDARD DETAIL #200-3

N.T.S. | D

NO	BY	DATE	REVISIONS	DATE	APP.

Registered Professional Engineer (Civil) CERTIFICATE NO. 70097 TAYLOR B. PIERCE Signed ARIZONA, U.S.A. Expires 12/31/28

PREPARED BY: PACE
DESIGNED BY: NE
DRAWN BY: DS, WW
CHECKED BY: TP
SCALE: AS NOTED
DATE: NOV 2025
JOB NO.: B614

MECHANICAL DETAILS II

TITLE

TOWN OF JEROME
WASTEWATER
TREATMENT PLANT
YAVAPAI CO. AZ

JOB

100% ISSUED FOR BID

PREPARED BY: TAYLOR B. PIERCE R.C.E 70097 DATE

PACE
Advanced Water Engineering
8723 E. Via de Ventura, Suite F-110, SCOTTSDALE, CA 85258
P. (480) 991-3595 | www.pacewater.com

SHEET
M8.1
47 OF 99 SHEETS

JOB NO. B614

THESE DRAWINGS ARE THE PROPERTY OF P.A.C.E. AND SHALL NOT BE REPRODUCED IN ANY MANNER NOR BE USED FOR CONSTRUCTION UNLESS STAMPED 'ISSUED FOR CONSTRUCTION'.

W:\B614\Engineering\B614-30\sheets\B614 - M8.0 MECHANICAL DETAILS.dwg - Tab: M8.1 - by maddingtondon on 02/23/26 at 12:41:49 PM

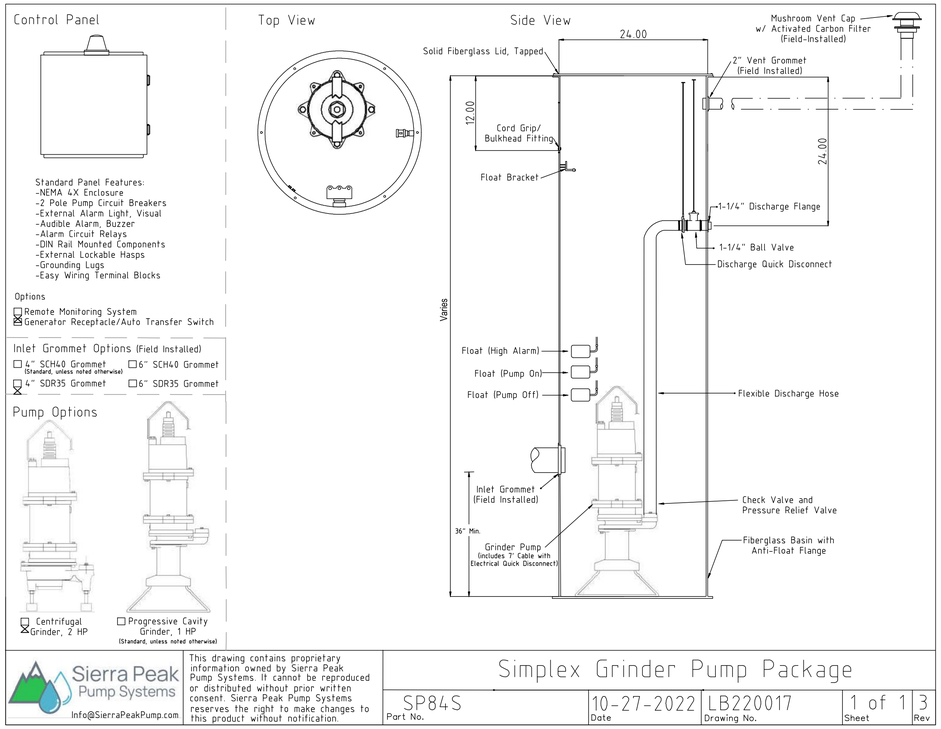

OVERFLOW LIFT STATION / OR EQUAL

N.T.S. | A

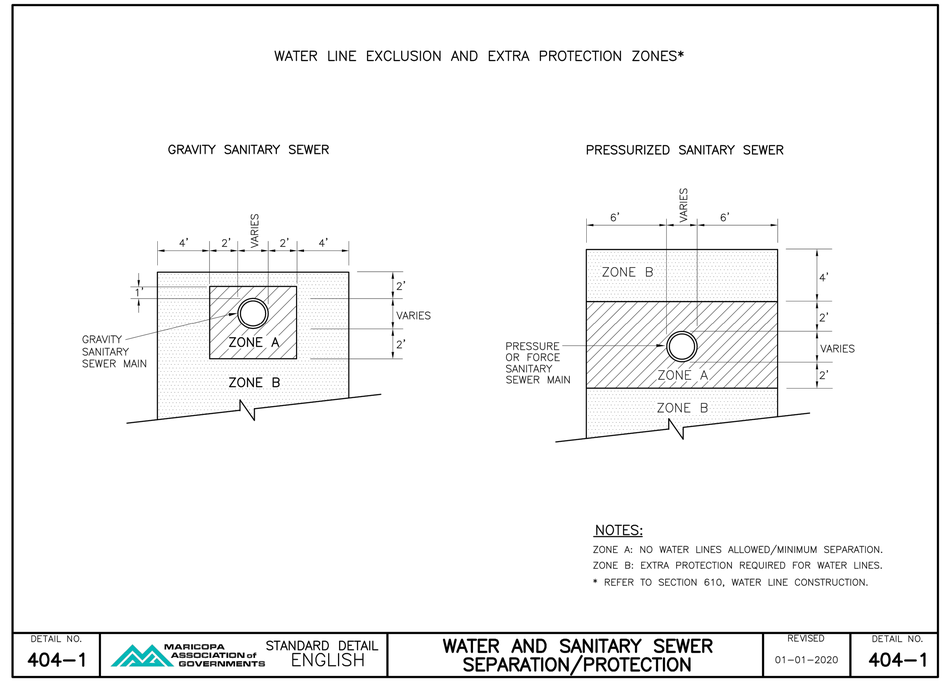

M.A.G. STANDARD DETAIL #404-1

N.T.S. | B

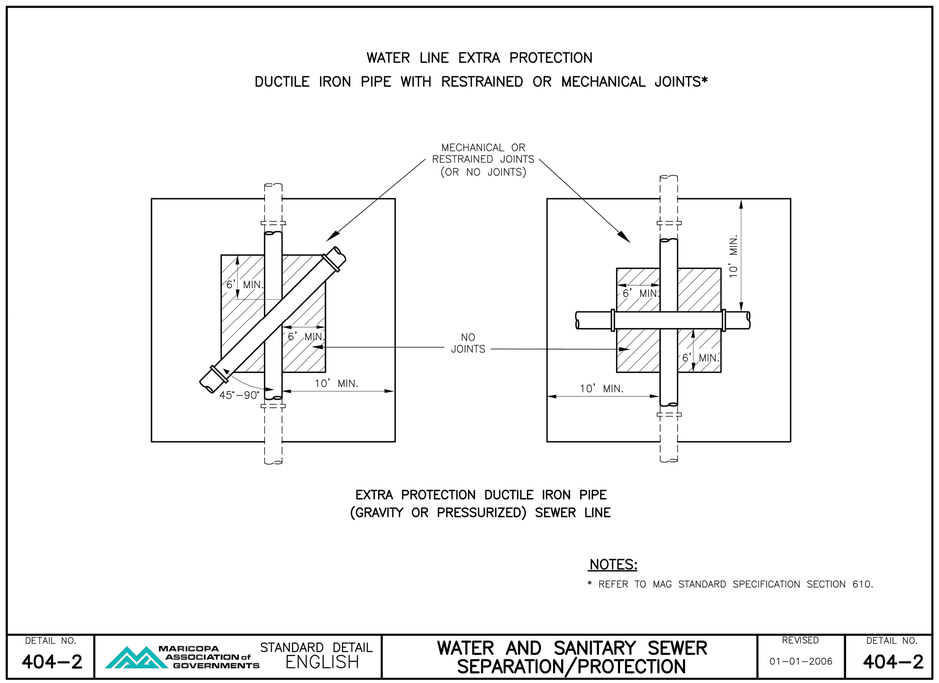

M.A.G. STANDARD DETAIL #404-2

N.T.S. | C

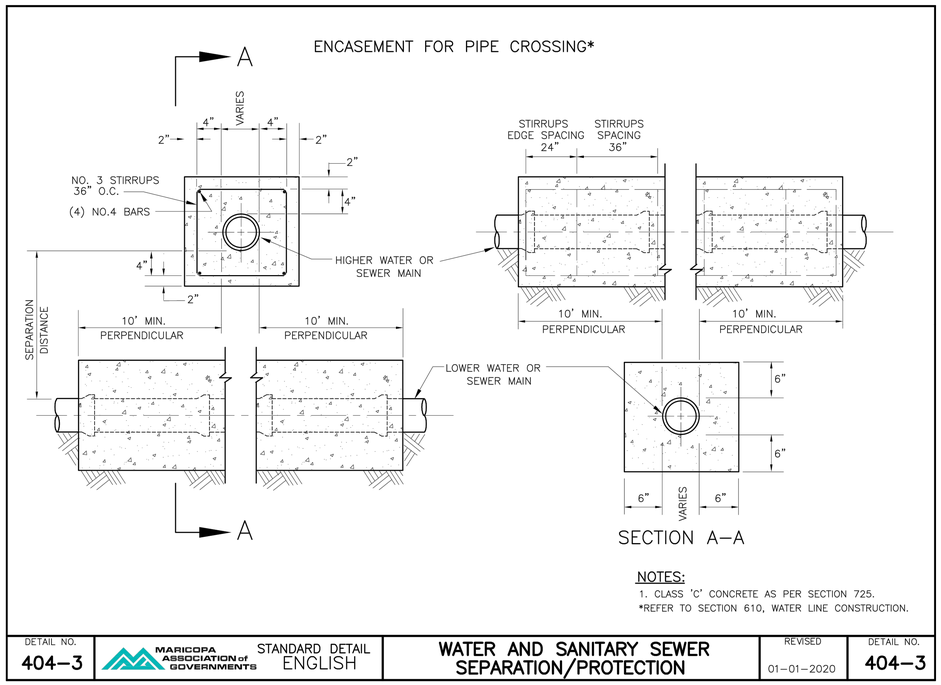

M.A.G. STANDARD DETAIL #404-3

N.T.S. | D

NO	BY	DATE	REVISIONS	DATE	APP.

Registered Professional Engineer (Civil) CERTIFICATE NO. 70097 Timothy B. Pierce Signed 11/28/25 ARIZONA, U.S.A. Expires 12/31/28

PREPARED BY: PACE
DESIGNED BY: NE
DRAWN BY: DS, WW
CHECKED BY: TP
SCALE: AS NOTED
DATE: NOV 2025
JOB NO.: B614

THESE DRAWINGS ARE THE PROPERTY OF P.A.C.E. AND SHALL NOT BE REPRODUCED IN ANY MANNER NOR BE USED FOR CONSTRUCTION UNLESS STAMPED 'ISSUED FOR CONSTRUCTION'.

TITLE: MECHANICAL DETAILS III

JOB: TOWN OF JEROME WASTEWATER TREATMENT PLANT YAVAPAI CO. AZ

100% ISSUED FOR BID

PREPARED BY: PACE
Advanced Water Engineering
8723 E. Via de Commercio, Suite 110, SCOTTSDALE, CA 85258
P: (480) 391-3595 | www.pacewater.com
TAYLOR B. PIERCE R.C.E 70097 DATE

SHEET M8.2
48 OF 99 SHEETS

JOB NO. B614

W:\B614\Engineering\B614-30sheets\B614 - M8.0 MECHANICAL DETAILS.dwg - Tab: M8.2 - by naddington on 02/23/26 at 12:41:49 PM

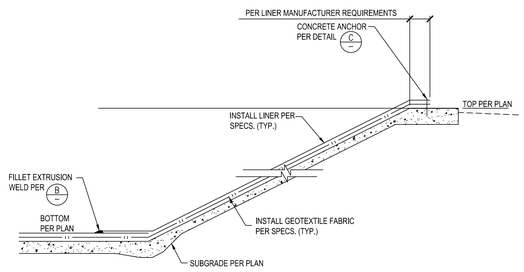

TYPICAL LINER SECTION 1"=1'-0" A

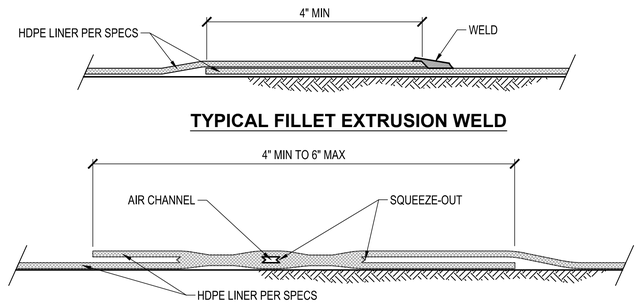

WELD DETAIL N.T.S. B

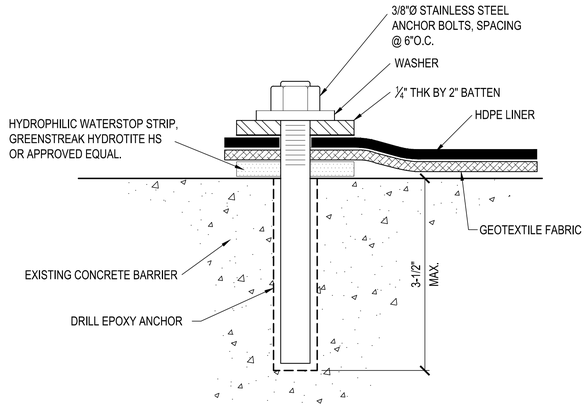

CONCRETE ANCHOR 1"=1'-0" C

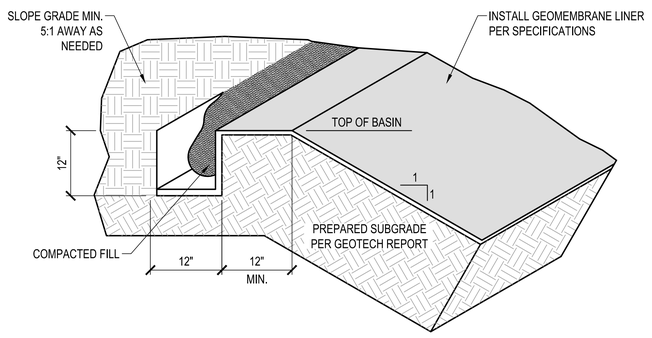

ANCHOR TRENCH N.T.S. D

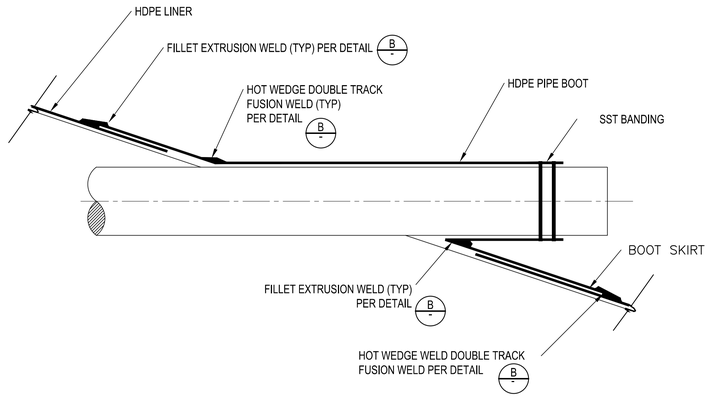

PIPE BOOT 1" = 1'-0" E

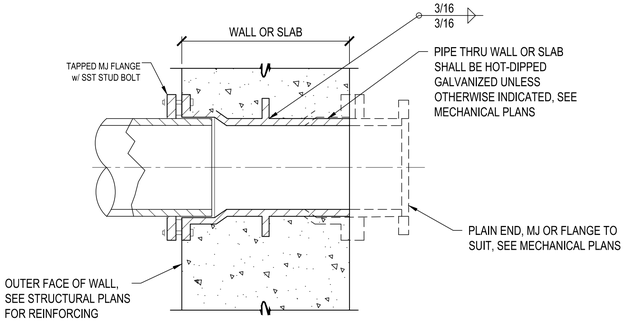

NOTE:
COAT PIPE WITH SPECIFIED PAINT SYSTEM PRIOR TO CONCRETE PLACEMENT

MECHANICAL JOINT WALL SLEEVE F

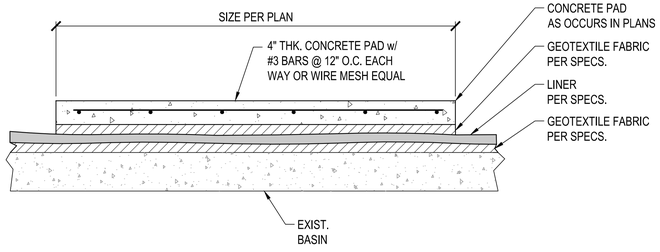

CONCRETE PAD OVER LINER 1"=1'-0" G

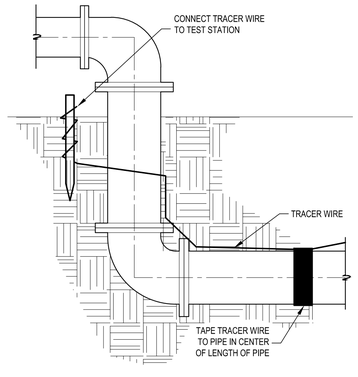

TRACER WIRE N.T.S. H

CONSTRUCTION NOTES

1. INSTALL CONCRETE COLLAR, CONTRACTOR SHALL CONTAIN A MIN. OF 6 1/2 SACKS OF CEMENT PER CUBIC YARD & ATTAIN A COMPRESSIVE STRENGTH OF 4,500 P.S.I. AFTER 28 DAYS IN ACCORDANCE W/ A.S.T.M. C39/C39M-99
2. INSTALL 6" SDR-35 P.V.C. PIPE & ELBOW FOR HEADER PIPE CLEANOUT. INSTALL 4" SDR-35 P.V.C. PIPE FOR PERFORATED PIPELINE CLEANOUT

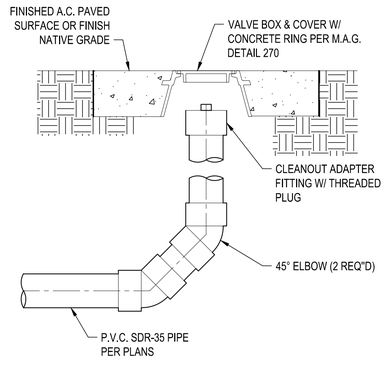

NOTE:
CLEANOUT RING & COVER SHALL BE RAISED TO FINISH GRADE & SUPPORT COLLAR INSTALLED AFTER PAVING OR FINISH GRADING HAS BEEN COMPLETED. CONTRACTOR SHALL COMPACT THE AREA UNDER CONCRETE COLLAR TO THE SATISFACTION OF THE ENGINEER BEFORE PLACING CONCRETE.

CLEANOUT N.T.S. I

100% ISSUED FOR BID

NO	BY	DATE	REVISIONS	DATE	APP.

THESE DRAWINGS ARE THE PROPERTY OF P.A.C.E. AND SHALL NOT BE REPRODUCED IN ANY MANNER NOR BE USED FOR CONSTRUCTION UNLESS STAMPED 'ISSUED FOR CONSTRUCTION'.

Registered Professional Engineer (Civil) CERTIFICATE NO. 70097 Timothy R. Pierce Signed ARIZONA, U.S.A. Expires 12/31/28

PREPARED BY:	PACE
DESIGNED BY:	NE
DRAWN BY:	DS, WW
CHECKED BY:	TP
SCALE:	AS NOTED
DATE	NOV 2025
JOB NO.	B614

TITLE
MECHANICAL DETAILS IV

JOB
TOWN OF JEROME
WASTEWATER
TREATMENT PLANT
YAVAPAI CO. AZ

PREPARED BY:
PACE
Advanced Water Engineering
8723 E. Via de Commercio, Suite 2, SCOTTSDALE, CA 85258
P: (480) 991-3995 | www.paceaz.com
TAYLOR B. PIERCE R.C.E 70097 DATE

SHEET
M8.3
49 OF 99 SHEETS

JOB NO. B614

W:\B614\Engineering\B614-30\sheets\B614 - M8.0 MECHANICAL DETAILS.dwg - Tab: M8.3 - by noddington on 02/23/26 at 12:41:49 PM

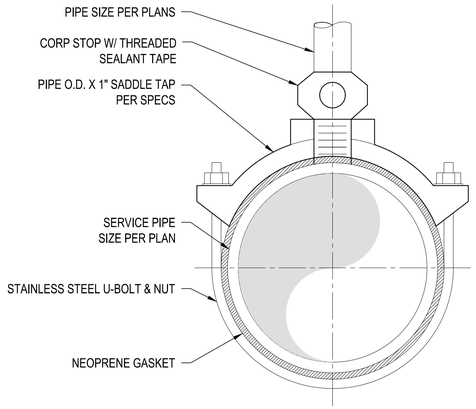

SADDLE TAP

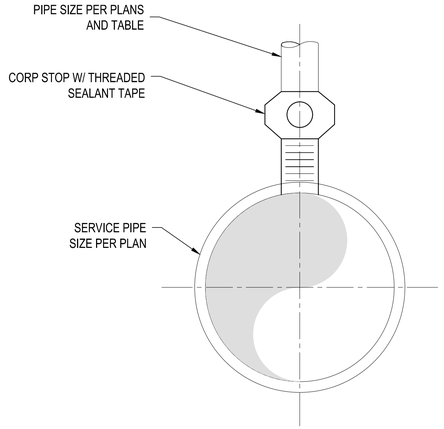

DIRECT TAP

SIZE (in.)	PRESSURE CLASS				
	150	200	250	300	350
	MAXIMUM RECOMMENDED DIRECT TAP SIZE (inch)				
3	-	-	-	-	3/4
4	-	-	-	-	3/4
6	-	-	-	-	1
8	-	-	-	-	1
10	-	-	-	-	1
12	-	-	-	-	1 1/4
14	-	-	1 1/4	1 1/2	1 1/2
16	-	-	1 1/2	2	2
18	-	-	2	2	2
20	-	-	2	2	2
24	-	2	2	2	2

PIPE TAP

N.T.S. **A**

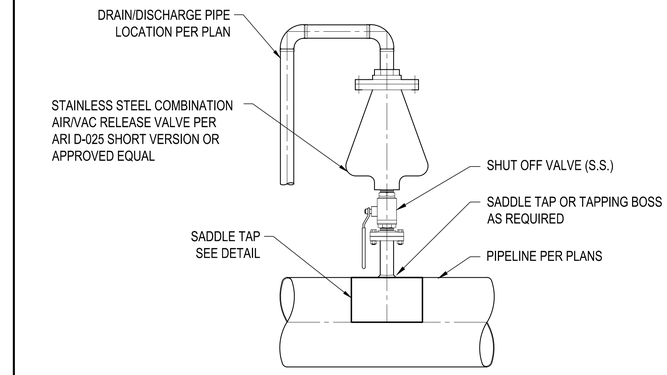

AIR/VAC RELEASE VALVE

N.T.S. **B**

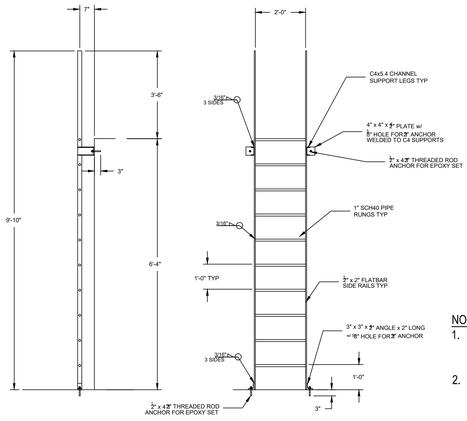

NOTES:
1. ALL MATERIALS SHALL BE CARBON STEEL.
2. ALL MATERIALS TO BE SHOP PRIMED W/ CARBOLINE 150 AFTER FABRICATION.

SHIP LADDER

N.T.S. **C**

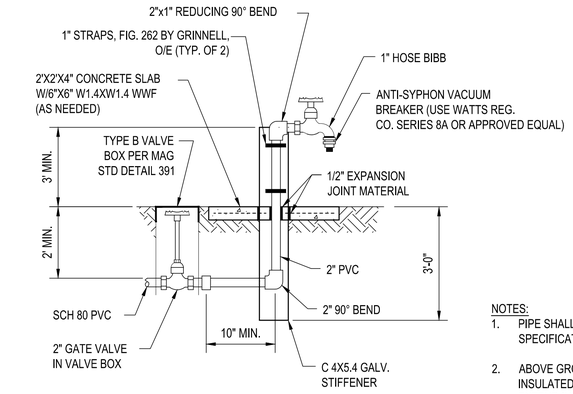

NOTES:
1. PIPE SHALL BE COLOR-CODED PER SPECIFICATIONS
2. ABOVE GROUND PIPING SHALL BE INSULATED PER SPECIFICATIONS. EXTEND INSULATION TO 12" BELOW GROUND.

HOSE BIB

N.T.S. **D**

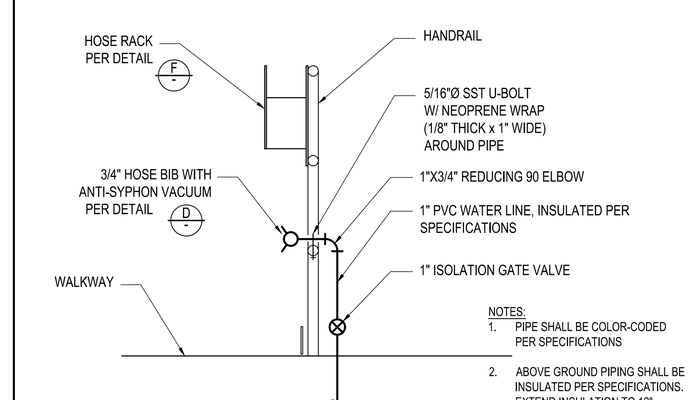

NOTES:
1. PIPE SHALL BE COLOR-CODED PER SPECIFICATIONS
2. ABOVE GROUND PIPING SHALL BE INSULATED PER SPECIFICATIONS. EXTEND INSULATION TO 12" BELOW GROUND.

RAIL MOUNTED HOSE VALVE

N.T.S. **E**

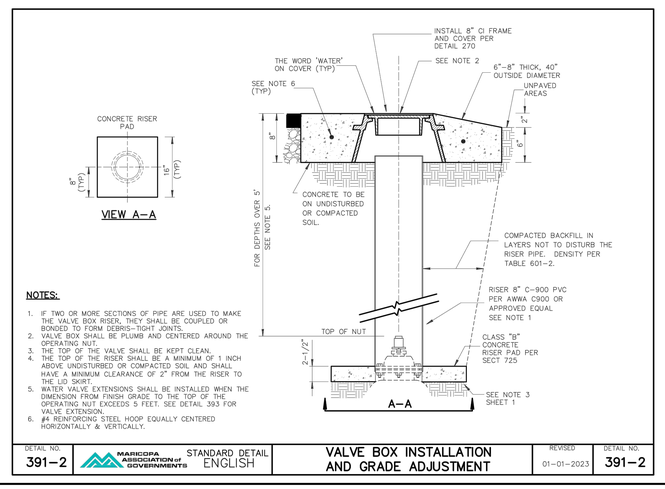

NOTES:
1. IF TWO OR MORE SECTIONS OF PIPE ARE USED TO MAKE THE VALVE BOX RISER, THEY SHALL BE COUPLED OR BONDED TO FORM DEBRIS-TIGHT JOINTS.
2. VALVE BOX SHALL BE PLUMB AND CENTERED AROUND THE OPERATING NUT.
3. THE TOP OF THE VALVE SHALL BE KEPT CLEAN.
4. THE TOP OF THE RISER SHALL BE A MINIMUM OF 1 INCH ABOVE UNDISTURBED OR COMPACTED SOIL AND SHALL HAVE A MINIMUM CLEARANCE OF 2" FROM THE RISER TO THE LID SKIRT.
5. WATER VALVE EXTENSIONS SHALL BE INSTALLED WHEN THE DIMENSION FROM FINISH GRADE TO THE TOP OF THE OPERATING NUT EXCEEDS 5 FEET. SEE DETAIL 393 FOR VALVE EXTENSION.
6. #4 REINFORCING STEEL HOOP EQUALLY CENTERED HORIZONTALLY & VERTICALLY.

DETAIL NO.		STANDARD DETAIL		REVISED	DETAIL NO.
391–2	MARICOPA ASSOCIATION of GOVERNMENTS	ENGLISH	VALVE BOX INSTALLATION AND GRADE ADJUSTMENT	01–01–2023	391–2

VALVE BOX

N.T.S. **F**

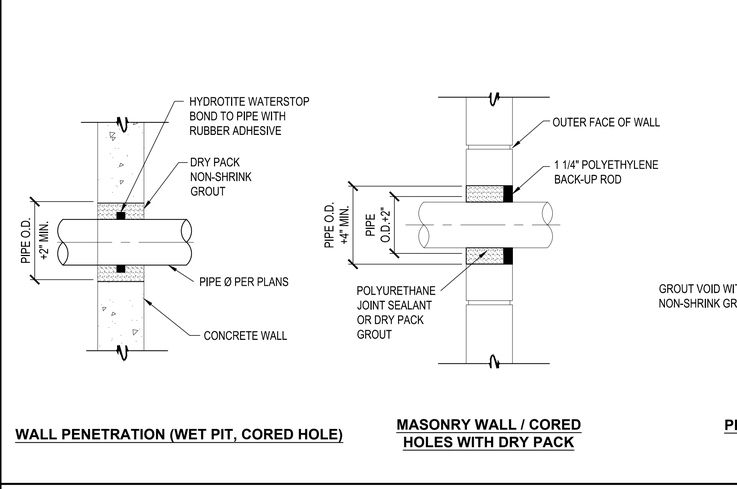

WALL PENETRATION (WET PIT, CORED HOLE)

MASONRY WALL / CORED HOLES WITH DRY PACK

PIPE SLEEVE W/ MODULAR SEAL

CORED HOLE W/ MODULAR SEAL

TABLE 1:

CORED HOLES	
PIPE SIZE NOMINAL	HOLE I.D.
1"	3"
1½"	3 1/2"
2"	4"
2½"	4"
3"	5"
4"	6"
5"	8"
6"	10"
8"	12"
10"	14"
12"	16"
14"	18"
16"	20"
18"	22"
20"	24"

PIPE PENETRATION DETAIL

N.T.S. **G**

NO	BY	DATE	REVISIONS	DATE	APP.

Registered Professional Engineer (Civil) CERTIFICATE NO. 70097 Nicholas E. Pierce Signed ARIZONA, U.S.A. Expires 12/31/28

PREPARED BY: PACE
DESIGNED BY: NE
DRAWN BY: DS, WW
CHECKED BY: TP
SCALE: AS NOTED
DATE: NOV 2025
JOB NO.: B614

MECHANICAL DETAILS V
TITLE

JOB TOWN OF JEROME WASTEWATER TREATMENT PLANT YAVAPAI CO. AZ

100% ISSUED FOR BID

PREPARED BY: TAYLOR B. PIERCE R.C.E 70097 DATE

PACE Advanced Water Engineering
8723 E. Via de Ventura, Suite 220, Scottsdale, CA 85258
P: (408) 991-3595 | www.pacewater.com

SHEET M8.4
50 OF 99 SHEETS
JOB NO. B614

THESE DRAWINGS ARE THE PROPERTY OF P.A.C.E. AND SHALL NOT BE REPRODUCED IN ANY MANNER NOR BE USED FOR CONSTRUCTION UNLESS STAMPED 'ISSUED FOR CONSTRUCTION'.

W:\B614\Engineering\B614-3\Sheets\B614 - M8.0 MECHANICAL DETAILS.dwg - Tab: M8.4 - by neddington on 02/22/26 at 12:41:49 PM

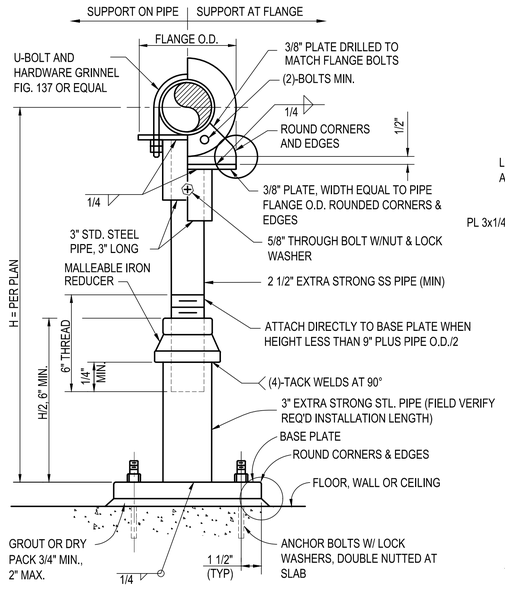

LOCATION	MEMBER	
	BASE PLATE	ANCHOR BOLTS
FLOOR	3/8 X 9 X 9	4-5/8"
CEILING	5/8 X 9 X 9	4-3/4"
WALL	5/8 X 9 X 9	4-3/4"

NOTES:
1. AS AN ALTERNATE, IF ADJUSTMENT IS NOT NECESSARY, DELETE 2 1/2" PIPE AND REDUCER AND WELD 3" STEEL PIPE DIRECTLY TO 3/8" PLATE ATTACHED TO PIPE FLANGE.
2. PIPE SUPPORT MAY BE ORIENTATED IN ANY DIRECTION.
3. FOR H > 3'-0", CONTRACTOR SHALL USE GRINNELL FIG. 264 AS APPROVED BY ENGINEER.

S1

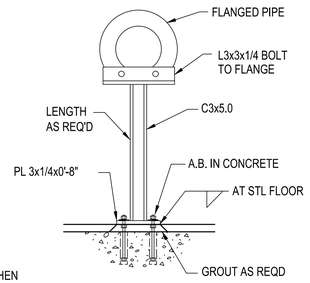

S2

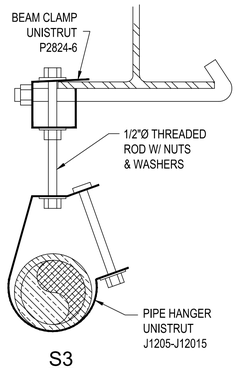

S3

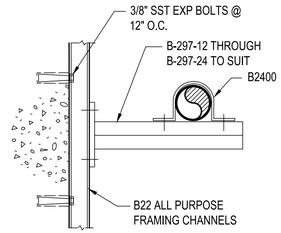

S4

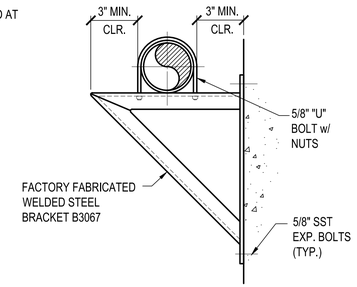

S5

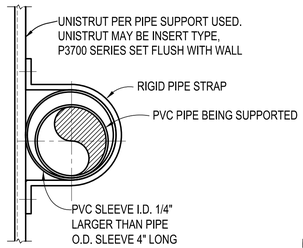

S6

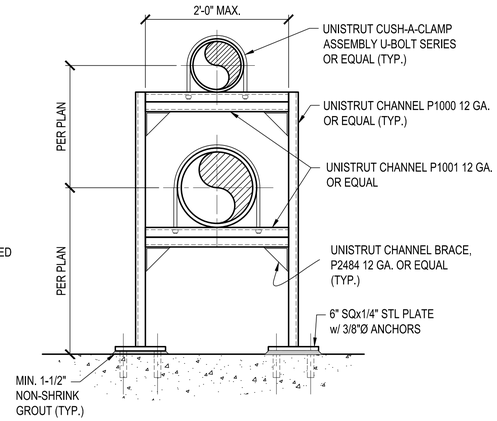

S7

GENERAL NOTES:

1. WHERE NO REFERENCE TO PIPE HANGERS OR SUPPORTS IS GIVEN ON THE DRAWINGS, THE CONTRACTOR SHALL USE THE APPROPRIATE HANGER OR SUPPORT SHOWN ON THIS DRAWING. MAXIMUM HANGER AND SUPPORT SPACING SHALL BE AS SHOWN IN SCHEDULE "A" ON THIS DRAWING. FIGURE NUMBERS ARE B-LINE, UNISTRUT OR GRINNELL.
2. ALL CONCRETE INSERTS, BRACKETS, CHANNELS, BOLTS, RODS, AND MISCELLANEOUS HARDWARE USED FOR PIPE HANGERS OR SUPPORTS SHALL BE 316 S.S., U.N.O.
3. CONCRETE CONTINUOUS INSERTS, B-LINE SERIES B52i, OR EQUAL, SHALL BE PROVIDED IN THE WALLS AND CEILINGS AS REQ'D OR AS NOTED ON THE DRAWINGS. INSERTS IN THE WALLS SHALL BE VERTICAL, UNLESS OTHERWISE NOTED AND SHALL BEGIN 6 INCHES ABOVE THE FLOOR AND END 6 INCHES BELOW THE CEILING. INSERTS IN THE CEILING SHALL BEGIN AND END 3 INCHES FROM WALLS AND BEAMS, WHERE PRACTICABLE. THE CENTERLINES OF WALL AND CEILING INSERTS SHALL ALIGN. MAXIMUM CENTER TO ENTER SPACING OF INSERTS SHALL BE 5'-0".
4. IN AREAS NOT COVERED UNDER NOTE 3, CONCRETE INSERTS SHALL BE B-LINE SERIES B3014N WITH APPROPRIATE NUT, B-LINE SERIES B521i CHANNEL EMBEDDED ANCHOR BOLTS, OR EQUAL. IN WITHOUT THE PRIOR WRITTEN APPROVAL OF THE ENGINEER (FOR EQUIPMENT LIFTING DEVICES, (SEE STRUCTURAL DRAWINGS).
5. SUPPORTS SHALL MEET MANUFACTURERS STANDARDIZATION SOCIETY OF THE VALVE AND FITTINGS INDUSTRY STANDARD PRACTICE SP58, LATEST EDITION.
6. HANGER BRACKET AND SUPPORT COMPONENTS MAY BE INTERCHANGED AS APPROVED BY THE ENGINEER.
7. TRAPEZE AND PIPE RACK COMPONENTS SHALL HAVE A MINIMUM STEEL THICKNESS OF 12 GAUGE. MAXIMUM DEFLECTION SHALL BE LIMITED TO 1/240 OF THE SPAN. CHANNEL COMPONENTS SHALL BE B-LINE SERIES B22 OR B22A, OR EQUAL.
8. CONCRETE INSERTS IN AREAS BELOW WATER SURFACE OR NORMALLY SUBJECT TO SUBMERGING SHALL BE EMBEDDED ANCHOR BOLTS, OR APPROVED EQUAL. IN NO CASE SHALL CONCRETE CONTINUOUS INSERTS BE USED IN THESE AREAS.
9. ALL PIPING, DUCTWORK, ACCESSORIES, APPURTENANCES, ETC. SHALL BE ANCHORED TO RESIST 200% OF THE APPLIED LOAD & A LATERAL SEISMIC FORCE OF 40 PERCENT OF ITS WEIGHT WITHOUT EXCESSIVE DEFLECTION.
10. CONTRACTOR SHALL VERIFY ALL SUPPORT DIMENSIONS AND LOCATIONS WITH APPROVED SHOP DRAWINGS FOR ITEMS BEING SUPPORTED BEFORE FABRICATION OR INSTALLATION OF SUPPORTS.

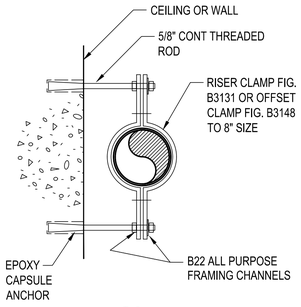

S8

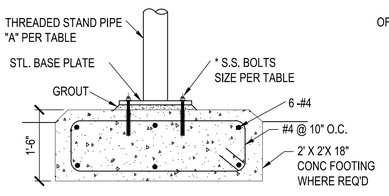

DIMENSIONS				
PIPE Ø SIZE	BOLT SIZE	STAND PIPE "A"	ADJ. PIPE "B"	FLANGE SUPPORT PLATE THK. "C"
4-12	1/2	3"	2 1/2"	1/4"
14-16	5/8	4"	3"	3/8"
18-36	7/8	6"	4"	3/8"

INSTALLATION NOTE:
PIPE SUPPORT SPACING, MATERIAL AND QUANTITY PER SPECS.

* BOLT EMBEDMENT DEPTH PER TABLE HEREON.

S1A

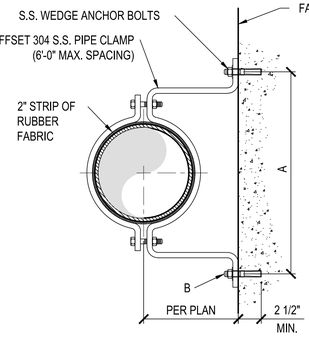

DIMENSIONS			
PIPE SIZE	A	HOLE SIZE B	BOLT SIZE
3	9 1/2	7/16	3/8
4	10 9/16	9/16	1/2
5	11 11/16	9/16	1/2
6	14 3/8	9/16	1/2
8	16 7/16	9/16	1/2
10	21 1/2	13/16	3/4
12	24 7/8	13/16	3/4
18	31	13/16	3/4
24	37	1 11/16	1

S9

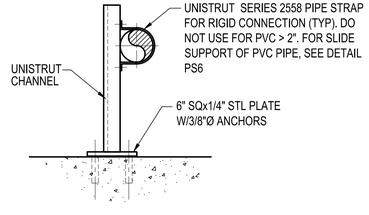

S12

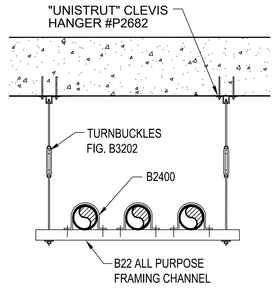

S10

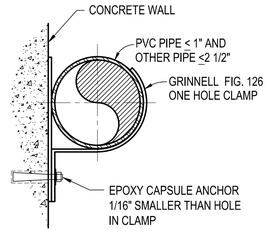

S11

SCHEDULE "A"

PIPE HANGER RODS AND SUPPORT SPACING

PIPE SIZE	ROD SIZE (INCHES)	MAX. SPAN (FT.) STEEL PIPE	COPPER PIPE	PVC PIPE	DUCTILE IRON PIPE	FIBERGLASS
UP TO 1"	3/8	6	5	5	-	-
1 1/4" TO 2"	3/8	10	8	5.5	10	-
2 1/2" TO 3 1/2"	1/2	10	8	6	10	-
4" TO 5"	5/8	10	-	8	10	-
6"	3/4	10	-	9	10	-
8" TO 12"	7/8	10	-	9	10	-
ABOVE 12"	1	10	-	9	10	-

BOLT DIAMETER	VERT BOLT EMBEDMENT LENGTH	HORIZ BOLT EMBEDMENT LENGTH	HEADED STUD FILLET WELD SIZE, "S".
1/2"	6"	4"	1/4"
5/8"	6"	4"	5/16"
3/4"	7"	5"	5/16"
7/8"	8"	6"	5/16"
1"	9"	7"	3/8"
1 1/8"	10"	8"	-----
1 1/4"	11"	9"	-----

TYP. ANCHOR AND EXPANSION BOLT SCHEDULE

NO	BY	DATE	REVISIONS	DATE	APP.

Registered Professional Engineer (Civil) CERTIFICATE NO. 70097 Timothy Pierce Signed 12/31/25 ARIZONA, U.S.A. Expires 12/31/26

THESE DRAWINGS ARE THE PROPERTY OF P.A.C.E. AND SHALL NOT BE REPRODUCED IN ANY MANNER NOR BE USED FOR CONSTRUCTION UNLESS STAMPED "ISSUED FOR CONSTRUCTION".

PREPARED BY: PACE
DESIGNED BY: NE
DRAWN BY: DS, WW
CHECKED BY: TP
SCALE: AS NOTED
DATE: NOV 2025
JOB NO.: B614

TITLE: MECHANICAL DETAILS VI

100% ISSUED FOR BID

PREPARED BY: TAYLOR B. PIERCE R.C.E. 70097 DATE

PACE
Advanced Water Engineering
8723 E. VIA de VENTURA, BLDG. A, SUITE 220 SCOTTSDALE, CA 85258
P: (480) 991-3955 | www.pacewater.com

JOB: TOWN OF JEROME WASTEWATER TREATMENT PLANT YAVAPAI CO. AZ

SHEET M8.5
51 OF 99 SHEETS

JOB NO. B614

PIPE SUPPORT DETAILS

N.T.S. A

W:\B614\Engineering\B614-30sheet\B614 - M8.0 MECHANICAL DETAILS.dwg - Tab: M8.5 - by neddington on 02/22/26 at 12:41:49 PM

GENERAL STRUCTURAL NOTES

APPLY UNLESS NOTED OTHERWISE

PK ASSOCIATES, LLC
6900 E. Belleview Ave. #200
Greenwood Village, Colorado 80111
Phone: (720) 799-1058
Email: cadd@pkastructural.com
Website: www.pkastructural.com

BUILDING CODE:

2012 EDITION OF THE INTERNATIONAL BUILDING CODE WITH TOWN OF JEROME AMENDMENTS.

LOADS:

ROOF LIVE LOAD = 20 PSF (REDUCIBLE).
TOTAL ROOF DEAD LOAD = 20 PSF.
GROUND SNOWLOAD = 20 PSF.
ROOF SNOW = 18.5 PSF.

WIND:

THE STRUCTURE AND ITS COMPONENTS ARE DESIGNED FOR WIND LOADS AS DEFINED BY THE BUILDING CODE, WHERE:

BASIC WIND SPEED 120 MPH.
RISK CATEGORY: III.
WIND EXPOSURE: C.
VELOCITY PRESSURE, qz = 23.7 PSF AT h = 12' FT. (MEAN ROOF HEIGHT). DESIGN WIND PRESSURES COMPONENTS AND CLADDING:

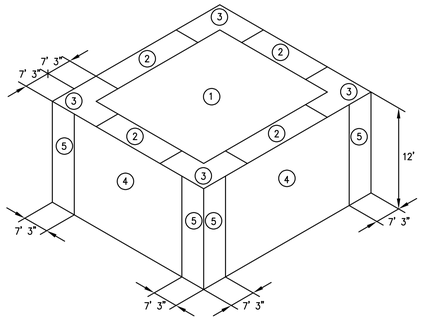

*PRESSURES SHOWN ARE ULTIMATE. MULTIPLY BY 0.6 FOR SERVICE LEVEL PRESSURES.

LOCATION	ZONE	EFFECTIVE WIND AREA (SF)	DESIGN WIND PRESSURE (PSF)*	
ROOF	1	10	+16.0	−54.9
		20	+16.0	−50.9
		50	+16.0	−45.6
		100	+16.0	−41.6
	2	10	+16.0	−74.2
		20	+16.0	−69.1
		50	+16.0	−62.3
		100	+16.0	−57.1
	3	10	+16.0	−103.3
		20	+16.0	−93.0
		50	+16.0	−79.4
		100	+16.0	−69.1
WALLS	4	10	+31.1	−30.4
		20	+29.1	−29.1
		50	+26.3	−27.2
		100	+24.2	−25.8
		500	+19.4	−22.6
	5	10	+31.1	−63.7
		20	+29.1	−58.1
		50	+26.3	−50.8
		100	+24.2	−45.2
		500	+19.4	−32.3
PARAPET	INTERIOR	10	+103.3	−58.1
		50	+88.6	−53.5
		100	+81.4	−50.0
	EXTERIOR	10	+132.4	−87.2
		50	+105.7	−77.0
		100	+93.3	−69.4

ZONE1: INTERIOR AREA OF ROOF AWAY FROM BUILDING EXTERIOR WALLS.
ZONE2: ROOF AREAS WITHIN 7'−3" OF EXTERIOR WALLS.
ZONE3: ROOF AREAS WITHIN 7'−3" OF BUILDING CORNERS.
ZONE4: EXTERIOR WALLS AWAY FROM BUILDING CORNERS.
ZONE5: EXTERIOR WALLS WITHIN 7'−3" OF BUILDING CORNERS.
−DESIGN WIND PRESSURES − PLUS AND MINUS SIGNS SIGNIFY PRESSURE ACTING TOWARD AND AWAY FROM EXTERIOR SURFACE.
−LINEAR INTERPOLATION BETWEEN VALUES OF TRIBUTARY AREA IS PERMISSIBLE.

SEISMIC:

RISK CATEGORY = III.
SEISMIC IMPORTANCE FACTOR: Ie = 1.25.
DESIGN CATEGORY = B.
SITE CLASS C.
SS = 0.31, S1 = 0.097, R = 3.5.
Sds = 0.269, Sd1 = 0.097.
BASIC SEISMIC−FORCE−RESISTING SYSTEM (INTERMEDIATE REINFORCED MASONRY SHEAR WALLS).
ANALYSIS PROCEDURE USED (EQUIVALENT LATERAL FORCE PROCEDURE).
CS = 0.096 (FACTORED).

FOUNDATIONS:

SOIL REPORT BY WESTERN TECHNOLOGIES INC; JOB NO.2522JW197; DATED OCTOBER 25, 2022; SPREAD FOOTINGS SHALL BEAR ON FIRM, UNDISTURBED SOIL AT BELOW GRADE TANKS AND 1' OF 2 SACK SLURRY AT GRADE. IN ACCORDANCE WITH THE ABOVE REPORT, BOTTOM OF FOOTING TO BE 2'0" MINIMUM BELOW FINISHED GRADE. (THESE FOOTING DEPTHS ARE MINIMUMS AND THE CONTRACTOR SHALL COORDINATE WITH SOILS REPORT AND OTHER TRADES TO ENSURE THESE MINIMUMS ARE SUFFICIENT FOR THE WORK.) FINISHED GRADE IS DEFINED AS TOP OF SLAB FOR INTERIOR FOOTINGS AND LOWEST ADJACENT GRADE WITHIN 5 FEET FOR PERIMETER FOOTINGS. DESIGN SOIL BEARING VALUE = 2500 PSF. FOUNDATION EXCAVATIONS SHALL BE INSPECTED BY SOILS ENGINEER PRIOR TO PLACEMENT OF CONCRETE.

CONCRETE:

MINIMUM 28 DAY STRENGTH 5,000 PSI EXCEPT AS FOLLOWS: (TYPE II, U.N.O.)

WALLS ---------- 5,000 PSI
MILD REINFORCED SLAB ---------- 5,000 PSI
FOUNDATIONS ---------- 5,000 PSI

MECHANICALLY VIBRATE ALL CONCRETE WHEN PLACED, EXCEPT THAT SLABS ON GRADE NEED BE VIBRATED ONLY AROUND UNDER−FLOOR DUCTS, ETC. MAXIMUM SLUMP 4 1/2" FOR CONCRETE WITHOUT PLASTICIZER. IF PLASTICIZER IS USED, A HIGHER FINAL SLUMP MAY BE ALLOWED UPON STRUCTURAL ENGINEER'S APPROVAL. CAST CLOSURE POUR AROUND COLUMNS AFTER COLUMN DEAD LOAD IS APPLIED. UNLESS APPROVED OTHERWISE IN WRITING BY THE ARCHITECT, ALL CONCRETE SLABS ON GRADE SHALL BE BOUND BY CONTROL JOINTS (KEYED OR SAW CUT), SUCH THAT THE ENCLOSED AREA DOES NOT EXCEED 225 SQUARE FEET. KEYED CONTROL JOINTS NEED ONLY OCCUR AT EXPOSED EDGES DURING POURING, ALL OTHER JOINTS MAY BE SAW CUT. CONTRACTOR SHALL SUBMIT PROPOSED LOCATIONS FOR APPROVAL PRIOR TO CONSTRUCTION.

REINFORCING:

ASTM A615 (FY = 60 KSI) DEFORMED BARS FOR ALL BARS. ALL GRADE 60 REINFORCING TO BE WELDED SHALL BE ASTM A706. WELDED WIRE FABRIC PER ASTM A185, WIRE PER ASTM A82. NO TACK WELDING OF REINFORCING BARS ALLOWED WITHOUT PRIOR REVIEW OF PROCEDURE WITH THE STRUCTURAL ENGINEER. LATEST ACI CODE AND DETAILING MANUAL APPLY. CLEAR CONCRETE COVERAGES AS FOLLOWS UNLESS NOTED OTHERWISE IN THE CONCRETE FIRE RATING TABLE:

CAST AGAINST AND PERMANENTLY EXPOSED TO EARTH ---------- 3"
EXPOSED TO EARTH OR WEATHER
#6 OR LARGER ---------- 2"
#5 AND SMALLER ---------- 1 1/2"
FLAT SLAB ---------- 3/4"
ALL OTHER PER LATEST EDITION OF ACI 318.

LAP SPLICES IN CONCRETE:

LAP SPLICES, UNLESS NOTED OTHERWISE, SHALL BE CLASS "B" TENSION LAP SPLICES PER LATEST EDITION OF ACI 318. LAP SPLICES IN CONCRETE COLUMNS SHALL BE TENSION LAP SPLICES. STAGGER SPLICES A MINIMUM OF ONE LAP LENGTH. LAPS IN WELDED WIRE FABRIC SHALL BE MADE SO THAT THE OVERLAP, MEASURED BETWEEN OUTERMOST CROSS WIRES OF EACH FABRIC SHEET, IS NOT LESS THAN THE SPACING OF CROSS WIRES PLUS 2 INCHES. ALL WELDED WIRE FABRIC SHALL BE CHAIRED TO ENSURE PROPER CLEARANCES.

ALL SPLICE LOCATIONS SUBJECT TO APPROVAL BY THE STRUCTURAL ENGINEER. PROVIDE BENT CORNER BARS TO MATCH AND LAP WITH HORIZONTAL BARS AT ALL CORNERS AND INTERSECTIONS PER TYPICAL DETAILS. REINFORCING BAR SPACING GIVEN ARE MAXIMUM ON CENTERS. ALL BARS PER CRSI SPECIFICATIONS AND HANDBOOK. DOWEL ALL VERTICAL REINFORCING TO FOUNDATION WITH STANDARD 90−DEGREE HOOKS UNLESS NOTED OTHERWISE. SECURELY TIE ALL BARS IN LOCATION BEFORE PLACING CONCRETE.

MASONRY:

MECHANICALLY VIBRATE GROUT IN VERTICAL SPACES IMMEDIATELY AFTER POURING AND AGAIN ABOUT 5 MINUTES LATER. PROVIDE CLEANOUTS IF GROUT LIFT EXCEEDS 4'−0" IN BLOCK WALLS. MAXIMUM GROUT LIFT SHALL BE 8'−0". UNLESS NOTED OTHERWISE ON THE PLANS, PLACE CONTROL JOINTS IN MASONRY WALLS SUCH THAT NO STRAIGHT RUN OF WALL EXCEEDS 24'−0". CONTROL JOINTS SHALL NOT OCCUR WITHIN 8'−0" OF WALL CORNERS, INTERSECTIONS, ENDS, WITHIN 24" OF CONCENTRATED POINTS OF BEARING OR JAMBS, OR OVER OPENINGS UNLESS SPECIFICALLY SHOWN ON THE STRUCTURAL DRAWINGS. ALL MASONRY BELOW FINISHED FLOOR OR GRADE SHALL BE GROUTED SOLID. LAP SPLICES SHALL BE AS FOLLOWS:

BAR SIZE	#3	#4	#5	#6	#7	#8	#9
BAR LAPS (INCHES)	27	36	45	54	63	72	81

HOLLOW CONCRETE MASONRY UNITS SHALL CONFORM TO ASTM C90, NORMAL WEIGHT, RUNNING BOND, MORTAR TYPE S (1800 PSI), COMPRESSIVE STRENGTHS AS FOLLOWS:

F'M(PSI)	UNIT STRENGTH, NET (PSI)	GROUT (PSI)	LOCATION
2000	2000	2000	TYPICAL U.N.O.

VERTICAL REINFORCING:

1 #5 IN CENTER OF GROUT AT CENTER OF WALL, CONTINUOUS FULL HEIGHT OF WALL AT ALL CORNERS, INTERSECTIONS, WALL ENDS, BEAM BEARINGS, JAMBS, EACH SIDE OF CONTROL JOINTS AND AT INTERVALS NOT TO EXCEED 48" O.C. UNLESS NOTED OTHERWISE. TIE AT 8'−0" VERTICALLY, WITH SINGLE WIRE LOOP TIE BY A.A. WIRE PRODUCTS COMPANY. LAP SPLICES SHALL BE AS PER SCHEDULE UNDER "MASONRY" SECTION. DOWEL ALL VERTICAL REINFORCING TO FOUNDATION WITH DOWELS TO MATCH VERTICAL REINFORCING.

HORIZONTAL REINFORCING:

2 #5 IN MINIMUM 8" DEEP GROUTED CONTINUOUS BOND BEAM AT (ELEVATED FLOORS AND) ROOFLINE. 1 #5 IN MINIMUM 8" DEEP GROUTED CONTINUOUS BOND BEAM AT TOP OF PARAPET OR TOP OF A FREESTANDING WALL AND AT BOTTOM OF WALL. USE 1 #4 HORIZONTAL BOND BEAM AT 48" O.C. VERTICALLY SPACED FOR ALL WALLS WITHOUT RUNNING BOND (STACKED BOND). PLACE THESE BARS CONTINUOUS THRU CONTROL JOINTS PER TYPICAL DETAIL. PROVIDE BENT BARS PER TYPICAL DETAILS, TO MATCH HORIZONTAL BOND BEAM REINFORCING, AT CORNERS AND WALL INTERSECTION TO MAINTAIN BOND BEAM CONTINUITY. LAP SPLICES SHALL BE AS PER SCHEDULE UNDER "MASONRY" SECTION. DO NOT SPLICE WITHIN 8'−0" OF CONTROL JOINTS. USE STANDARD WEIGHT (NO. 9 GAGE WIRE) DUR−O−WAL OR DUR−O−WIRE (OR EQUIVALENT) LADDER TYPE JOINT REINFORCEMENT AT 16" O.C. IN MASONRY WALLS.

ANCHOR BOLTS:

ALL ANCHOR BOLTS SHALL BE ASTM F1554 GRADE 36 (WELDABLE), U.N.O., WHEN SPECIFIED ON PLAN, ALL ASTM F1554 GRADE ANCHOR BOLTS SHALL BE 511 (WELDABLE) ANCHOR BOLTS.

MAY BE BENT IN FIELD PER AISC REQUIREMENTS TO FIX DAMAGED ANCHOR BOLTS; FIELD BENT IS LIMITED TO 45° OR LESS. ANCHOR BOLTS CAN HAVE HEADED OR HOOKED BOLTS SHAPES. USE HEADED ANCHOR BOLTS WHERE ANCHOR BOLT SHAPE IS NOT SPECIFIED. ANCHOR BOLTS SHALL BE INSPECTED PER SPECIAL INSPECTION TABLE REQUIREMENTS.

STRUCTURAL STEEL:

STEEL SETIONS − MINIMUM GRADE AND STRENGTH

STEEL WIDE FLANGES	= ASTM A992 (50KSI)
STEEL CHANNELS	= ASTM A36 (36KSI)
STEEL ANGLES	= ASTM A36 (36KSI)
STEEL COLUMN BASE PLATES	= ASTM A992 (50KSI)
STEEL PLATES AT MOMENT FRAME AND BRACED FRAME CONNECTIONS	= ASTM A992 (50KSI)
STEEL PLATES (MISCELLLANEOUS)	= ASTM A36 (36KSI)
STEEL HSS (RECTANGLE)	= ASTM A500 (46KSI)
STEEL HSS (ROUND)	= ASTM A500 (42KSI)
STEEL PIPES	= ASTM A501 (36KSI) − OR − ASTM A53 (35KSI), TYPE E OR S

NOTE: ALL 36KSI STEEL MAY BE SUBSTITUTED WITH 50KSI STEEL UNLESS NOTED OTHERWISE.

ALL CONSTRUCTION PER LATEST AISC HANDBOOK. ALL REFERENCE TO HEADED STUDS SHALL BE HIGH STRENGTH HEADED STUDS. ATTACHMENT OF HEADED STUDS SHALL CONFORM TO ALL REQUIREMENTS OF THE LATEST EDITION OF THE "RECOMMENDED PRACTICES FOR STUD WELDING" AND THE "STRUCTURAL WELDING CODE" PUBLISHED BY AWS. ALL BOLTS, ANCHOR BOLTS, EXPANSION BOLTS, ETC. SHALL BE INSTALLED WITH STEEL WASHERS AT SLOTTED HOLES IN STEEL SECTIONS. ALL WELDING SHALL BE PERFORMED BY WELDERS HOLDING VALID CERTIFICATES AND HAVING CURRENT EXPERIENCE IN THE TYPE OF WELD SHOWN ON THE DRAWINGS OR NOTES. CERTIFICATES SHALL BE THOSE ISSUED BY AN ACCEPTED TESTING AGENCY. ALL WELDING DONE BY E70 SERIES LOW HYDROGEN RODS UNLESS NOTED OTHERWISE. FOR GRADE 60 REINFORCING BARS, USE E90 SERIES. ALL WELDING PER LATEST AMERICAN WELDING SOCIETY STANDARDS, (EXCEPT STEEL JOISTS AND JOIST GIRDERS SHALL COMPLY WITH SJI STANDARDS). THESE DRAWINGS DO NOT DISTINGUISH BETWEEN SHOP AND FIELD WELDS; THE CONTRACTOR MAY SHOP WELD OR FIELD WELD AT HIS DISCRETION. SHOP WELDS AND FIELD WELDS SHALL BE SHOWN ON THE SHOP DRAWINGS SUBMITTED FOR REVIEW. ALL FULL (COMPLETE) PENETRATION WELDS SHALL BE TESTED AND CERTIFIED BY AN INDEPENDENT TESTING LABORATORY. WHEN STRUCTURAL STEEL IS FURNISHED TO A SPECIFIED MINIMUM YIELD POINT GREATER THAN 36 KSI, THE ASTM OR OTHER SPECIFICATION DESIGNATION SHALL BE INCLUDED NEAR THE ERECTION MARK ON EACH SHIPPING ASSEMBLY OR IMPORTANT CONSTRUCTION COMPONENT, OVER ANY SHOP COAT OF PAINT, PRIOR TO SHIPMENT FROM THE FABRICATOR'S PLANT. STRUCTURAL STEEL COMPONENTS, AND FASTENERS AT ALL EXTERIOR CONDITIONS SHALL BE GALVANIZED OR PROTECTED AGAINST CORROSION USING APPROVED METHOD PUBLISHED BY AISC OR ANSI. WELDS ON GALVANIZED STEEL SHALL FOLLOW AWS D−19.0 SPECIFICATIONS.

STRUCTURAL BOLTS:

ALL STRUCTURAL BOLTS SHALL BE ASTM F3125 GRADE A325 TYPE 1 AND SHALL BE INSTALLED AS BEARING−TYPE CONNECTIONS WITH THREADS INCLUDED IN SHEAR PLANE (I.E. A TYPE "N" CONNECTION) UNLESS NOTED OTHERWISE. USE A325 TYPE 3 BOLTS AT ALL CONNECTIONS EXPOSED TO WEATHERING. USE SC (SLIP CRITICAL) AT ALL MOMENT FRAMES AND BRACED FRAMES. USE ASTM A354 BOLTS WHERE THE BOLT LENGTH REQUIRED FOR THE CONNECTION EXCEEDS THE MINIMUM LENGTH OF AN A325 BOLT. BOLTS MAY BE TIGHTENED USING ANY AISC APPROVED METHOD. ALL STRUCTURAL BOLTING SHALL BE INSPECTED BY AN INDEPENDENT TESTING LABORATORY TO ENSURE BOLT TENSION.

STEEL GRATING:

UNLESS NOTED OTHERWISE IN ARCHITECTURAL SPECIFICATIONS, USE PAINTED (GALVANIZED) STEEL GRATING WITH 2 1/2" X 3/16" BEARING BARS AT 1 3/16" O.C. AND CROSSBARS AT 4" O.C. GRATING SHALL BE ERECTED AND ATTACHED PER MANUFACTURER'S RECOMMENDATIONS.

ROOF DECK:

DECK SHALL BE 1 1/2" DEEP, 36" WIDE, 20 GAGE GALVANIZED STEEL, WITH MINIMUM YIELD STRESS OF 50 KSI, WITH MINIMUM S = 0.237 IN3 AND I = 0.231 IN4 PER FOOT OF WIDTH. DECK SHALL BE ERECTED IN ACCORDANCE WITH MANUFACTURER'S RECOMMENDATIONS AS 1 SPAN MINIMUM AND SHALL BE ATTACHED FOR A MINIMUM DIAPHRAGM SHEAR CAPACITY OF 650 PLF USING THE FOLLOWING MINIMUM ATTACHMENTS:

WELD DECK TO SUPPORTING MEMBERS WITH 4 − 5/8" DIAMETER OR 3/8" X 1" PUDDLE WELDS PER SHEET AT ENDS, END LAPS AND AT INTERMEDIATE SUPPORTS, AND AT 24" O.C. AT PERIMETER BEAMS AND OPENING EDGES RUNNING PARALLEL TO THE DECK. SIDE SEAM ATTACHMENT SHALL BE VSC2 AT 24" O.C.

CONSTRUCTION JOINTS:

ALL CONSTRUCTION JOINTS IN WALLS SHALL BE KEYED IN ACCORDANCE WITH THE TYPICAL CONSTRUCTION JOINT DETAILS SHOWN ON THE STRUCTURAL DRAWINGS OR, AT THE CONTRACTOR'S OPTION, SHALL BE INTENTIONALLY ROUGHENED IN ACCORDANCE WITH THE FOLLOWING: THE SURFACE OF ROUGHENED JOINTS SHALL BE SAND BLASTED OR ROUGHENED WITH A CHIPPING HAMMER TO EXPOSE THE AGGREGATE EMBEDDED IN THE PREVIOUS POUR. THE EXPOSED AGGREGATE SHALL PROTRUDE A MINIMUM OF 1/4 INCH. ALL SURFACES OF CONSTRUCTION JOINTS SHALL BE CLEANED AND LAITANCE REMOVED. IMMEDIATELY BEFORE NEW CONCRETE IS PLACED, ALL CONSTRUCTION JOINTS SHALL BE WETTED AND STANDING WATER REMOVED. VERTICAL CONSTRUCTION JOINTS IN WALLS SHALL BE HELD TO A MAXIMUM SPACING OF 60'−0". ALL CONSTRUCTION JOINTS IN SLABS, JOISTS, BEAMS, AND GIRDERS SHALL BE OFFSET A DISTANCE EQUAL TO TWICE THE WIDTH OF THE BEAM.

ACCORDANCE WITH THE TYPICAL SLAB ON DECK CONSTRUCTION JOINT DETAIL SHOWN ON THE STRUCTURAL DRAWINGS. BEAMS AND GIRDERS HAVE BEEN DESIGNED ASSUMING THE CONSTRUCTION JOINTS TO BE LOCATED IN THE MIDDLE THIRD OF THE BEAM, GIRDER, OR SLAB SPAN. ALL CONSTRUCTION, CONTROL, AND ISOLATION JOINTS FOR SLABS ON GRADE SHALL BE IN ACCORDANCE WITH THE TYPICAL SLAB ON GRADE DETAILS. THE CONTRACTOR SHALL SUBMIT THE PROPOSED LOCATIONS OF CONSTRUCTION JOINTS TO THE ENGINEER FOR ACCEPTANCE BEFORE STARTING CONSTRUCTION.

ELECTRICAL CONDUIT IN CONCRETE SLABS:

ELECTRICAL CONDUIT SHALL BE RIGID STEEL CONDUIT OR FLEXIBLE PLASTIC CONDUIT. ALUMINUM CONDUIT IS PROHIBITED. CONDUIT WITH A MAXIMUM OUTSIDE DIAMETER OF 1/6 TIMES THE SLAB THICKNESS MAY BE EMBEDDED IN ONE LAYER AT THE MID−DEPTH OF SLABS. MINIMUM CLEAR DISTANCE BETWEEN CONDUITS SHALL BE 3 TIMES CONDUIT DIAMETER. CONDUIT SHALL BE FIRMLY CHAIRED AND TIED TO PREVENT DISPLACEMENT DURING POURING. PLACE #3 AT 12 INCHES O.C. ADDITIONAL REINFORCING ABOVE AND BELOW, PERPENDICULAR TO THE CONDUIT. THE ADDED REINFORCING SHALL EXTEND 1'−0" PAST THE CONDUIT ON BOTH SIDES. FOR CONDUIT PLACED IN SLABS ON METAL DECKING, CONDUIT SHALL RUN IN THE METAL DECK FLUTES PER THE TYPICAL CONDUIT IN SLAB ON METAL DECK DETAIL.

CONCRETE INSERTS:

THIN SLAB TYPE INSERTS SHALL BE GALVANIZED AND HAVE THE FOLLOWING MINIMUM WORKING LOADS(A 4:1 RATIO OF ULTIMATE TO WORKING VALUES IS ASSUMED):

BOLT DIAMETER	WORKING LOAD SHEAR	TENSION
1/2"	1,000 LBS.	650 LBS.
5/8"	1,250 LBS.	700 LBS.
3/4"	1,600 LBS.	850 LBS.

COIL LOOP INSERTS SHALL BE GALVANIZED AND HAVE THE FOLLOWING MINIMUM WORKING LOADS(A 3:1 RATIO OF ULTIMATE TO WORKING VALUES IS ASSUMED):

BOLT DIAMETER	WORKING LOAD SHEAR	TENSION
1/2"	2,200 LBS.	2,820 LBS.
5/8"	3,000 LBS.	3,620 LBS.
3/4"	3,100 LBS.	3,660 LBS.

THREADED COIL RODS, COIL NUTS, ETC., USED IN CONJUNCTION WITH CONCRETE INSERTS, SHALL HAVE A WORKING LOAD EQUAL TO OR GREATER THAN THE CORRESPONDING CONCRETE INSERT. CONTRACTOR SHALL SUBMIT MANUFACTURER'S SIZE AND STRENGTH DATA PRIOR TO CONSTRUCTION TO THE STRUCTURAL ENGINEER THRU THE ARCHITECT. VALUES LISTED ABOVE ARE FOR RICHMOND STRUCTURAL CONNECTION INSERTS.

EXPANSION AND SCREW ANCHORS:

USE STUD TYPE EXPANSION ANCHOR WITH A SINGLE PIECE WEDGE ONLY WHERE NOTED ON PLANS. IF USE IS REQUESTED FOR OTHER THAN WHERE NOTED CONTACT STRUCTURAL ENGINEER THROUGH ARCHITECT FOR APPROVAL.

CONTRACTOR SHALL SUBMIT MANUFACTURER'S SIZE AND STRENGTH DATA TO ENGINEER THROUGH ARCHITECT PRIOR TO CONSTRUCTION. INSTALL ALL BOLTS AS OUTLINED IN MANUFACTURER'S SPECIFICATIONS, UTILIZING PROPER SIZE AND TYPE OF DRILL, CLEANING HOLE, DRIVING AND TIGHTENING BOLT.

IN CONCRETE:

ANCHORS USED MUST HAVE ICC APPROVAL AND INCLUDE HILTI KWIK BOLT TZ2 (ESR−4266), AND SIMPSON STRONG BOLT−2 (ESR−3037), AND DEWALT POWER−STUD+SD2 (ESR−2502), AND SIMPSON TITEN HD (ESR−2713), HILTI KWIK HUS−EZ (ESR−3027), AND DEWALT SCREW−BOLT+ (ESR−3889) OR APPROVED EQUAL.

IN MASONRY:

ANCHORS USED MUST HAVE ICC APPROVAL AND INCLUDE HILTI KWIK BOLT 3 (ESR−1385), AND SIMPSON STRONG BOLT−2 (ES−240), DEWALT POWER−STUD+SD1 (ESR−2966), HILTI KWIK HUS−EZ (ESR−3056) AND SIMPSON TITEN HD (ESR−1056), AND DEWALT SCREW−BOLT+ (ESR−4042) OR APPROVED EQUAL.

EPOXY ANCHORS IN CONCRETE AND MASONRY:

INJECTABLE ADHESIVE SHALL BE USED FOR INSTALLATION OF REINFORCING STEEL DOWELS OR THREADED ANCHOR RODS AND INSERTS INTO NEW OR EXISTING CONCRETE OR SOLID GROUTED CONCRETE MASONRY UNITS ONLY WHERE SPECIFIED ON PLANS. IF USE IS REQUESTED FOR OTHER THAN WHERE NOTED CONTACT STRUCTURAL ENGINEER THROUGH ARCHITECT FOR APPROVAL. ADHESIVE SHALL BE FURNISHED IN SIDE BY SIDE PACKS WHICH KEEP COMPONENT A AND COMPONENT B SEPARATE. USE ONLY INJECTION TOOLS AND STATIC MIXING NOZZLES RECOMMENDED BY MANUFACTURER. MANUFACTURER'S INSTRUCTIONS SHALL BE FOLLOWED.

IN CONCRETE:

ANCHORS USED MUST HAVE I.C.C. APPROVAL IN CRACKED CONCRETE AND INCLUDE SIMPSON SET−XP (ESR−2508), HILTI HIT−RE500−V3 (ESR−3814), DEWALT PURE110+ (ESR−3298) OR APPROVED EQUIVALENT. THE USE OF ANY EPOXY ANCHOR MUST BE APPROVED BY THE ENGINEER OF RECORD PRIOR TO INSTALLATION.

IN MASONRY:

ANCHORS USED MUST HAVE ICC APPROVAL AND INCLUDE SIMPSON SET (ESR−1772) AND HILTI HIT−HY 270 MAX (ESR−4143) AND DEWALT AC100+GOLD (ESR−3200) OR APPROVED EQUIVALENT. THE USE OF ANY EPOXY ANCHOR MUST BE APPROVED BY THE ENGINEER OR RECORD PRIOR TO INSTALLATION.

1. ADHESIVE ANCHORS INSTALLED IN HORIZONTAL TO VERTICALLY OVERHEAD ORIENTATION TO SUPPORT SUSTAINED TENSION LOADS SHALL BE DONE BY A CERTIFIED ADHESIVE ANCHOR INSTALLER (AAI) AS CERTIFIED THROUGH ACI (ACI 318−11 D.9.2.2) / (ACI 318−14 17.8.2.2) / (ACI 318−19 17.2.3) PROOF OF CURRENT CERTIFICATION SHALL BE SUBMITTED TO THE ENGINEER FOR APPROVAL PRIOR TO COMMENCEMENT OF INSTALLATION.
2. ADHESIVE ANCHORS MUST BE INSTALLED IN CONCRETE AGED A MINIMUM OF 21 DAYS (ACI 318−11 D.2.2) / (ACI 318−14 17.1.2) / (ACI 318−19 17.2.2).
3. THE REMOVAL AND RESETTING OF POST INSTALLED ANCHORS IS PROHIBITED (ACI 318−19 17.3.1).
4. PROVIDE SPECIAL INSPECTION FOR ALL MECHANICAL AND ADHESIVE ANCHORS PER THE APPLICABLE BUILDING CODE AND PER THE CURRENT ICC−ES REPORT (IBC 2012, 2015, 2018 TABLE 1705.3 TYPE 4, NOTE B).

STRUCTURAL FILL:

ALL FILL PLACED TO SUPPORT SLABS ON GRADE, BEHIND PERMANENT WALLS, AND AROUND ALL DRAINS SHALL CONSIST OF WELL GRADED, GRANULAR MATERIAL PER THE SPECIFICATIONS. SOILS FOR STRUCTURAL FILL SHALL BE APPROVED BY THE GEOTECHNICAL ENGINEER. STRUCTURAL FILL SHALL BE PLACED ON SOUND NATIVE MATERIAL. PROOF−ROLL CUT AREAS WHICH PROVIDE SUPPORT FOR PERMANENT STRUCTURES. AREAS WHICH ARE EXCESSIVELY YIELDING, AS DETERMINED BY THE CONTINUOUS OBSERVATION OF THE GEOTECHNICAL ENGINEER, SHALL BE OVEREXCAVATED AND REPLACED WITH STRUCTURAL FILL. STRUCTURAL FILL SHALL BE PLACED PER THE SPECIFICATION. USE LEAN CONCRETE FILL BELOW ALL PIPES EXISTING OUT OF BASEMENT WALL, FULL HEIGHT OF WALL. CONCRETE SHALL CONTAIN 2 SACKS OF CEMENT PER YARD.

LATERAL PRESSURE ON SUBGRADE WALLS:

THE DESIGN PRESSURES FOR SUBGRADE WALLS ARE BASED ON A "DRAINED" CONDITION. SEE CIVIL AND MECHANICAL DRAWINGS FOR SUBGRADE DRAINAGE SYSTEM. SEE GEOTECHNICAL REPORT FOR COMPACTION REQUIREMENTS AT SUBGRADE WALLS. SUBGRADE WALLS AND SUPPORTING SLABS SHALL HAVE ATTAINED THEIR FULL CONCRETE STRENGTH BEFORE PLACING ANY BACKFILL U.N.O. THE CONTRACTOR SHALL PROVIDE TEMPORARY BRACES FOR WALLS IF BACKFILL IS PLACED BEFORE WALLS AND SLABS ACHIEVE FULL CONCRETE STRENGTH.

NOTES ON CRACKING OF CONCRETE STRUCTURES:

CRACKING IS INHERENT TO THE MATERIAL PROPERTIES OF CONCRETE CONSTRUCTION (INCLUDING POST−TENSIONED CONCRETE STRUCTURES). WHILE EVERY EFFORT HAS BEEN MADE TO MINIMIZE THE EFFECTS OF UNSIGHTLY CRACKING, THE PRESENCE OF CRACKS ARE NORMAL AND UNAVOIDABLE. THE DESIGN OF THE CONCRETE STRUCTURAL ITEMS HAVE BEEN ANALYZED USING A "CRACKING SECTION." THE PRESENCE OF THE CRACKING SHOULD NOT BE CONSIDERED DETRIMENTAL TO THE STRUCTURE. CRACKS LARGER THAN 10 MILS SHALL BE FILLED AND SEALED WITH AN APPROVED CRACK FILLER TO PREVENT FUTURE DETERIORATION. ALLOWANCE SHALL BE MADE IN THE CONSTRUCTION BUDGET FOR SEALING OF SUCH CRACKS. IN SOME CASE, CRACKS DO NOT APPEAR UNTIL WELL AFTER CONSTRUCTION HAS BEEN COMPLETED. IT IS THE RESPONSIBILITY OF THE OWNER TO MAINTAIN THE STRUCTURE PROPERLY OVER THE LIFE OF THE STRUCTURE. CONCRETE CRACKS, SHOULD THEY OCCUR, SHALL BE FILLED AND SEALED TO PREVENT PREMATURE DETERIORATION OF THE STRUCTURE.

STRUCTURAL SHEET INDEX

SHEET	DESCRIPTION
S1.1	GENERAL STRUCTURAL NOTES
S1.2	GENERAL STRUCTURAL NOTES
S1.3	TYPICAL DETAILS
S1.4	TYPICAL DETAILS
S1.5	TYPICAL DETAILS
S1.6	TYPICAL DETAILS
S1.7	TYPICAL DETAILS
S2.00	FOUNDATION PLAN
S2.01	FRAMING PLAN
S2.10	FRAMING PLAN
S3.1	FOUNDATION DETAILS
S3.2	FOUNDATION DETAILS
S3.3	FRAMING DETAILS
S4.1	FRAMING DETAILS
S4.2	FRAMING DETAILS

NO	BY	DATE	REVISIONS	DATE	APP.

Registered Professional Engineer
CERTIFICATE NO.
70374
JAMES APPLEYARD
10/31/25
Date Signed
ARIZONA, U.S.A.

PREPARED BY: PKA
DESIGNED BY: JA
DRAWN BY: NS
CHECKED BY: JA
SCALE: AS NOTED
DATE: SEP 2025
JOB NO.: 23364

THESE DRAWINGS ARE THE PROPERTY OF P.A.C.E. AND SHALL NOT BE REPRODUCED IN ANY MANNER NOR BE USED FOR CONSTRUCTION UNLESS STAMPED "ISSUED FOR CONSTRUCTION".

TITLE: GENERAL STRUCTURAL NOTES

JOB: TOWN OF JEROME WASTEWATER TREATMENT PLANT — YAVAPAI AZ

ISSUED FOR BID

PREPARED BY: TAYLOR B. PIERCE — R.C.E 70097 — DATE

PACE
Advanced Water Engineering
8723 E. Via de Commercio, Suite 1 | Scottsdale, CA 85258
P: (480) 991-3995 | www.paceadvisor.com

SHEET S1.1
52 OF 99 SHEETS

JOB NO. 23364

GENERAL STRUCTURAL NOTES

APPLY UNLESS NOTED OTHERWISE

SHOP DRAWINGS:

SHOP DRAWINGS SHALL BE SUBMITTED FOR ALL STRUCTURAL ITEMS IN ADDITION TO ITEMS REQUIRED BY ARCHITECTURAL SPECIFICATIONS.

THE CONTRACTOR SHALL REVIEW ALL SHOP DRAWINGS PRIOR TO SUBMITTAL. ITEMS NOT IN ACCORDANCE WITH CONTRACT DOCUMENTS SHALL BE FLAGGED UPON HIS REVIEW.

VERIFY ALL DIMENSIONS WITH ARCHITECTURAL DRAWINGS AND ALL FINISHED GRADE WITH CIVIL DRAWINGS.

ANY CHANGES, SUBSTITUTIONS, OR DEVIATIONS FROM CONTRACT DOCUMENTS SHALL BE CLOUDED BY MANUFACTURER OR FABRICATOR. ANY OF THE AFOREMENTIONED WHICH ARE NOT CLOUDED OR FLAGGED BY SUBMITTING PARTIES, SHALL NOT BE CONSIDERED APPROVED AFTER ENGINEER'S REVIEW, UNLESS NOTED ACCORDINGLY.

THE ENGINEER HAS THE RIGHT TO APPROVE OR DISAPPROVE ANY CHANGES TO CONTRACT DOCUMENTS AT ANYTIME BEFORE OR AFTER SHOP DRAWING REVIEW.

THE SHOP DRAWINGS DO NOT REPLACE THE CONTRACT DOCUMENTS. ITEMS OMITTED OR SHOWN INCORRECTLY AND ARE NOT FLAGGED BY THE STRUCTURAL ENGINEER OR ARCHITECT ARE NOT TO BE CONSIDERED CHANGES TO CONTRACT DOCUMENTS. IT IS THE CONTRACTOR'S RESPONSIBILITY TO MAKE SURE ITEMS ARE CONSTRUCTED PER THE CONTRACT DOCUMENTS.

THE ADEQUACY OF ENGINEERING DESIGNS AND LAYOUT PERFORMED BY OTHERS RESTS WITH THE DESIGNING OR SUBMITTING AUTHORITY.

REVIEWING IS INTENDED ONLY AS AN AID TO THE CONTRACTOR IN OBTAINING CORRECT SHOP DRAWINGS. RESPONSIBILITY FOR CORRECTNESS SHALL REST WITH THE CONTRACTOR.

GENERAL:

ENTIRE CONTRACT DOCUMENTS SHALL BE USED TO CONSTRUCT BUILDING. SOME CRITICAL ITEMS REQUIRED BY OTHER DISCIPLINES MAY NOT BE SHOWN ON STRUCTURAL DRAWING (I.E. WALL, FLOOR AND ROOF OPENINGS, ARCHITECTURAL, MECHANICAL AND PLUMBING LOADS, SUPPORT PLATES ETC.)

ITEMS SHOWN BY OTHER DISCIPLINES WITH REFERENCE TO STRUCTURAL DRAWING BUT NOT SHOWN ON THESE STRUCTURAL DOCUMENTS SHALL BE CONSIDERED DESIGN BUILD ITEMS. CONTRACTOR SHALL SUBMIT DESIGN BY OTHERS FOR REVIEW.

THE STRUCTURAL CONSTRUCTION DOCUMENTS REPRESENT THE FINISHED STRUCTURE. THEY DO NOT INDICATE THE METHOD OF CONSTRUCTION. THE CONTRACTOR SHALL PROVIDE ALL MEASURES NECESSARY TO PROTECT THE STRUCTURE DURING CONSTRUCTION. SUCH MEASURES SHALL INCLUDE, BUT NOT BE LIMITED TO, BRACING, SHORING FOR LOADS DUE TO CONSTRUCTION EQUIPMENT, ETC. THE STRUCTURAL ENGINEER SHALL NOT BE RESPONSIBLE FOR THE CONTRACTOR'S MEANS, METHODS, TECHNIQUES, SEQUENCES FOR PROCEDURE OF CONSTRUCTION, OR THE SAFETY PRECAUTIONS AND THE PROGRAMS INCIDENT THERETO (NOR SHALL OBSERVATION VISITS TO THE SITE INCLUDE INSPECTION OF THESE ITEMS).

CONSTRUCTION MATERIALS SHALL BE SPREAD OUT IF PLACED ON FRAMED CONSTRUCTION. LOAD SHALL NOT EXCEED THE DESIGN LIVE LOAD PER SQUARE FOOT.

WHERE REFERENCE IS MADE TO VARIOUS TEST STANDARDS FOR MATERIALS, SUCH STANDARDS SHALL BE THE LATEST EDITION AND/OR ADDENDA.

ESTABLISH AND VERIFY ALL OPENINGS AND INSERTS FOR ARCHITECTURAL, MECHANICAL, PLUMBING AND ELECTRICAL WITH APPROPRIATE TRADES, DRAWINGS AND SUBCONTRACTORS PRIOR TO CONSTRUCTION.

OPTIONS ARE FOR CONTRACTOR'S CONVENIENCE. IF THE CONTRACTOR CHOOSES AN OPTION, THE CONTRACTOR SHALL BE RESPONSIBLE FOR ALL NECESSARY CHANGES AND SHALL COORDINATE ALL DETAILS.

NOTES AND DETAILS ON DRAWINGS SHALL TAKE PRECEDENCE OVER GENERAL STRUCTURAL NOTES AND TYPICAL DETAILS. WHERE NO DETAILS ARE SHOWN, CONSTRUCTION SHALL CONFORM TO SIMILAR WORK ON THE PROJECT.

ALL DIMENSIONS SHOWN (INCLUDING ELEVATIONS) ON STRUCTURAL DRAWINGS ARE TO ASSIST CONTRACTOR IN VERIFICATION. SCALING DIMENSIONS FROM DRAWINGS IS NOT PERMITTED. LOCATION OF ALL ITEMS SHALL BE DETERMINED BY DIMENSIONS OR NOTES ONLY; DO NOT USE GRAPHIC APPEARANCE TO ASSUME SPECIFIC LOCATIONS.

CONTRACTOR SHALL BE RESPONSIBLE FOR VERIFICATION OF ALL DIMENSIONS WITH ARCHITECTURAL AND FINISHED GRADE WITH CIVIL DRAWINGS PRIOR TO START OF CONSTRUCTION. RESOLVE ANY DISCREPANCY WITH THE ARCHITECT.

TYPICAL DETAILS MAY NOT NECESSARILY BE CUT ON PLANS, BUT APPLY UNLESS NOTED OTHERWISE.

WHERE DISCREPANCIES OCCUR BETWEEN PLANS, DETAILS, GENERAL STRUCTURAL NOTES AND SPECIFICATIONS, THE GREATER REQUIREMENTS SHALL GOVERN.

ANY ENGINEERING DESIGN, PROVIDED BY OTHERS AND SUBMITTED FOR REVIEW, SHALL BEAR THE SEAL OF AN ENGINEER REGISTERED IN THE STATE OF JURISDICTION.

SUPPLIER OF ENGINEERED STRUCTURAL COMPONENTS (I.E. STEEL JOISTS, STAIRS, PRECAST ITEMS) SHALL BE RESPONSIBLE FOR COMPLETE DESIGN AND SHALL USE ENTIRE CONTRACT DOCUMENTS TO INCLUDE ALL LOADS AND DETAIL REQUIREMENTS FROM ALL DISCIPLINES. SUPPLIER SHALL PROVIDE ADDITIONAL MATERIAL REQUIRED TO MEET ALL THEIR REQUIREMENTS FOR INSTALLATION (I.E. WIDER BEARING PLATES, SHIMS, ERECTION BOLTS ETC.).

STRUCTURAL STEEL SUPPLIER SHALL FURNISH BOLTS FOR OSHA CONNECTIONS (SEE DRAWINGS FOR DETAILS).

WALL SHORING SHALL BE INSTALLED PRIOR TO BACKFILLING BEHIND ALL BUILDING RETAINING WALLS, UNLESS ALL RESTRAINING SLABS ARE INSTALLED. USE HANDTAPPING ONLY WHEN WITHIN 8'-0", OR WITHIN HALF THE WALL HEIGHT OF BACKFILLED WALL.

CONTINUOUS FOUNDATION DRAIN PIPES (FRENCH DRAINS) OR WEEP HOLES SHALL BE PROVIDED BEHIND ALL BASEMENT WALLS AND ALL EXTERIOR RETAINING WALLS THAT RETAIN MORE THAN 3'-0" OF SOIL. WEEP HOLES WHERE USED SHALL BE 2" IN DIAMETER AT 6'-0" O.C. MAXIMUM.

BUILDING TOLERANCES:

STANDARD TOLERANCES SHALL BE BASED ON THE REQUIREMENTS OF THE AISC CODE OF STANDARD PRACTICE AND ACI 117, STANDARD SPECIFICATIONS FOR TOLERANCES FOR CONCRETE CONSTRUCTION AND MATERIALS.

SEQUENCING CONSTRUCTION AND LATERAL STABILITY:

THE STRUCTURAL COMPONENTS BY THEMSELVES ARE A NON-SELF-SUPPORTING STRUCTURE. LATERAL FORCES DUE TO WIND, EARTHQUAKE, OR SOIL ARE CARRIED BY THE ROOF AND FLOOR DIAPHRAGMS TO THE LATERAL SYSTEM. CERTAIN ELEMENTS SHOWN ON OR LOCAL STABILITY OF OTHER ELEMENTS (SUCH AS BEAMS, COLUMNS, AND WALLS). IF, DUE TO SEQUENCING OF CONSTRUCTION, THESE STABILITY ELEMENTS ARE NOT IN PLACE, THE CONTRACTOR SHALL RETAIN A LICENSED STRUCTURAL ENGINEER WHO SHALL INVESTIGATE WHERE TEMPORARY SHORING/BRACING IS REQUIRED, AND SHALL DESIGN THIS TEMPORARY SHORING/BRACING. THE CONTRACTOR SHALL PROVIDE THIS SHORING/BRACING UNTIL THE REQUIRED STRUCTURAL ELEMENTS AND THEIR CONNECTIONS HAVE BEEN INSTALLED AND REACH THEIR FINAL DESIGN STRENGTHS.

MISCELLANEOUS:

REFER TO ARCHITECTURAL, MECHANICAL, ELECTRICAL, CIVIL, ELEVATOR, OR OTHER SPECIALTY ENGINEERING DRAWINGS FOR DIMENSIONS NOT SHOWN, INCLUDING BUT NOT LIMITED TO: SIZE AND LOCATION OF CURBS, EQUIPMENT HOUSEKEEPING PADS, WALL AND FLOOR OPENINGS, BLOCKOUTS, FLOOR DEPRESSIONS, SUMPS, DRAINS, ANCHOR BOLTS, EMBEDDED ITEMS, ARCHITECTURAL TREATMENT, ETC. CONTRACTOR SHALL VERIFY DIMENSIONS AND RESOLVE DISCREPANCIES OR CONFLICTS PRIOR TO CONSTRUCTION. WHERE SECTIONS ARE INDICATED ON THE PLAN BY A NUMBER AND A DRAWING NUMBER THUS, 1/S5.01, THE INDICATED SECTION (1) IS SHOWN ON STRUCTURAL DRAWING S5.01.

ALL WINDOW SYSTEMS SHALL BE DESIGNED TO ACCOMMODATE VERTICAL DEFLECTION OF THE STRUCTURE OF 1/2" MINIMUM LIVE LOAD DEFLECTION, UNLESS GREATER VALUE IS NOTED ON PLANS OR DETAILS.

FLOOR FLATNESS/LEVELNESS SHALL MEET ARCHITECTURAL SPECIFICATIONS (1/4" IN 10 FOOT MINIMUM LEVELNESS UNLESS TIGHTER REQUIREMENT IN SPECIFICATIONS) IN HEIGHT FOR ALL STRUCTURAL SYSTEMS. CONTRACTOR SHALL INCLUDE COST FOR LEVELING ALL FLOORS. FOR ESTIMATING PURPOSES ONLY, ASSUME 1/2" THICK LEVELING AGENT OVER 15% OF FLOOR AREA.

FABRICATOR APPROVAL:

SPECIAL INSPECTIONS NOTED ABOVE APPLY TO SHOP FABRICATED ASSEMBLIES IN ADDITION TO ON-SITE WORK UNLESS THE FABRICATOR IS AN "APPROVED FABRICATOR" AS DEFINED IN 2022 CBC.

STRUCTURAL OBSERVATION:

ENGINEER OF RECORD SHALL PROVIDE VISUAL OBSERVATION OF THE STRUCTURAL SYSTEM, FOR GENERAL CONFORMANCE TO THE APPROVED PLANS AND SPECIFICATIONS, AT SIGNIFICANT CONSTRUCTION STAGES AND AT THE COMPLETION OF THE STRUCTURAL SYSTEM. CONTRACTOR IS REQUIRED FOR COORDINATING THE TIMING OF SITE VISITS AND SHALL INCLUDE A MINIMUM OF 3 VISITS. THESE VISITS ARE TO BE PAID BY THE CONTRACTOR. STRUCTURAL OBSERVATION DOES NOT INCLUDE OR WAIVE THE RESPONSIBILITY FOR THE INSPECTIONS REQUIRED BY THE BUILDING CODE (NOTED ABOVE).

INSTRUCTIONS TO BIDDERS CONTINGENCIES:

1. UNDER NO CIRCUMSTANCES SHALL THESE DRAWINGS BE "FINAL BID" UNTIL THE PROJECT IS FULLY PERMITTED.
2. ALL PRELIMINARY PRICING EFFORTS SHALL BE CONSIDERED TO BE ESTIMATES ONLY AND SHALL INCLUDE THE NECESSARY CONTINGENCIES, ALLOWANCES, ALTERNATES, ETC. AS APPROPRIATE TO ACCOUNT FOR MODIFICATIONS AND ADDITIONS THAT WILL OCCUR TO THE DRAWINGS DURING THE FINALIZATION OF THE DESIGN AND PERMITTING.
3. THE OWNER OR CONTRACTOR SHALL UTILIZE THE FOLLOWING MINIMUM CONTINGENCIES FOR EACH OF THE STRUCTURAL ELEMENT COSTS TO BE USED AT THE SOLE DISCRETION OF THE STRUCTURAL ENGINEER:

CONSTRUCTION DOCUMENTS/FINAL BID 3% MINIMUM

ALL OF THE "FINAL BID" CONTINGENCIES NOT USED BY THE STRUCTURAL ENGINEER SHALL BE REFUNDED TO THE OWNER PRIOR TO THE CLOSEOUT OF THE PROJECT.

4. ANY MODIFICATIONS, DELETIONS OR ELIMINATIONS TO THE STRUCTURAL BIDDING AND CONTINGENCY REQUIREMENTS, WITHOUT THE CONSENT OF THE STRUCTURAL ENGINEER, SHALL AUTOMATICALLY INDEMNIFY THE STRUCTURAL ENGINEER OF ANY COSTS THAT MAY ARISE DURING THE DESIGN AND CONSTRUCTION OF THE PROJECT.
5. WHERE DISCREPANCIES OCCUR WITHIN THE DRAWINGS THE CONTRACTOR WILL EITHER RESOLVE THE DISCREPANCIES WITH THE ARCHITECT BEFORE BIDDING OR INCLUDE THE GREATER COST ITEM IN THE BID AND RESOLVE THE DISCREPANCY PRIOR TO CONSTRUCTION.

NOTE TO CONTRACTOR REGARDING PRICING/BIDDING OF CITY SUBMITTAL DRAWINGS:

THESE DRAWINGS HAVE BEEN PREPARED FOR CITY SUBMITTAL, AND ARE NOT TO BE CONSIDERED 100% CONSTRUCTION DOCUMENTS UNTIL CITY PLAN REVIEW HAS BEEN COMPLETED AND FINAL BUILDING PERMIT HAS BEEN ISSUED. IF THESE DOCUMENTS ARE TO BE USED FOR PRICING, BID, OR STEEL MILL ORDER, THE CONTRACTOR SHALL PROVIDE IN THE PROJECT BUDGET AN ALLOWANCE FOR POTENTIAL CHANGES BETWEEN THE CITY SUBMITTAL DRAWINGS AND THE FINAL APPROVED SUBMITTAL AND CONSTRUCTION DOCUMENTS. ADDITIONALLY, MISCELLANEOUS ITEMS MAY NOT BE SHOWN ON THESE DRAWINGS. THESE ITEMS INCLUDE, BUT ARE NOT LIMITED TO, ELEVATOR AND EQUIPMENT SUPPORTS, BLOCKOUTS, ETC. REFER TO ARCHITECTURAL, MECHANICAL, ELECTRICAL, AND OTHER SPECIALTY DRAWINGS FOR ADDITIONAL INFORMATION. THE CONSTRUCTION BUDGET SHALL INCLUDE THESE ITEMS. THE STRUCTURAL ENGINEER WILL NOT BE RESPONSIBLE FOR CHANGE ORDER COSTS INCURRED (INCLUDING DISCARDED MATERIAL COSTS) DUE TO BIDDING OR STEEL MILL ORDER FROM THESE DRAWINGS. CONTACT STRUCTURAL ENGINEER FOR CLARIFICATION IF THE SCOPE AND QUANTITY OF ALLOWANCE TO BE CARRIED IS NOT CLEAR.

CONTRACTOR RESPONSIBILITY:

EACH CONTRACTOR OR SUB-CONTRACTOR RESPONSIBLE FOR THE CONSTRUCTION OF THE WIND AND/OR SEISMIC RESISTING SYSTEM THAT IS LISTED IN THE STATEMENT OF SPECIAL INSPECTIONS SHALL SUBMIT A WRITTEN STATEMENT OF RESPONSIBILITY TO THE BUILDING OFFICIAL AND THE OWNER PRIOR TO THE COMMENCEMENT OF WORK REQUIRING SPECIAL INSPECTION. THE CONTRACTOR'S STATEMENT OF RESPONSIBILITY SHALL CONTAIN ACKNOWLEDGMENT OF AWARENESS OF THE SPECIAL REQUIREMENTS CONTAINED IN THE STATEMENT OF SPECIAL INSPECTIONS.

DEFERRED SUBMITTALS: (PER 2012 IBC 107.3.4.1)

FOR THE PURPOSES OF THIS SECTION, DEFERRED SUBMITTALS ARE DEFINED AS THOSE PORTIONS OF THE DESIGN WHICH ARE NOT SUBMITTED AT THE TIME OF THE APPLICATION AND THAT ARE TO BE SUBMITTED TO THE BUILDING OFFICIAL WITHIN A SPECIFIED PERIOD.

DOCUMENTS FOR DEFERRED SUBMITTAL ITEMS SHALL BE SUBMITTED TO THE PROFESSIONAL IN RESPONSIBLE CHARGE FOR REVIEW. THE CONTRACTOR SHALL FORWARD THE REVIEWED DOCUMENTS TO BUILDING OFFICAL WITH A NOTATION INDICATING THAT THE DEFERRED SUBMITTAL DOCUMENTS HAVE BEEN REVIEWED AND BEEN FOUND TO BE IN GENERAL CONFORMANCE TO THE DESIGN OF THE BUILDING. THE DEFERRED SUBMITTAL ITEMS SHALL NOT BE INSTALLED UNTIL THE DESIGN AND SUBMITTAL DOCUMENTS HAVE BEEN APPROVED BY THE BUILDING OFFICIAL.

DEFERRED SUBMITTAL ITEMS:

ALUMINUM WALKWAY
GRATING
HANDRAILS/STAIRS
SHORING EXCAVATIONS
EQUIPMENT ATTACHMENTS, INCLUDING ADD'L FRAMING REQ'D

SPECIAL INSPECTION:

PER IBC CHAPTER 17, SPECIAL INSPECTION IS REQUIRED FOR THE FOLLOWING ITEMS:

CONCRETE: VERIFICATION AND INSPECTION	CONTINUOUS	PERIODIC	REFERRENCED STANDARD (NOTE 1)	IBC REFERENCE
1. Inspection of reinforcing steel, including prestressing tendons, and placement.	–	X	ACI 318: Ch. 20, 25.2 25.3, 26.6.1–26.6.3	1908.4
2. Reinforcing bar welding: a. Verify weldability of reinforcing bars other than ASTM A706; b. Inspect single-pass fillet welds, maximum 5/16"; and c. Inspect all other welds.	– – X	X X –	AWS D1.4 ACI 318: 26.6.4	---
3. Inspect anchors to be installed in concrete prior to and during placement of concrete where allowable loads have been increased or where strength design is used.	–	X	ACI 318: 17.8.2	---
4. Inspection of anchors post-installed in hardened concrete members. a. Adhesive anchors installed in horizontally or upwardly inclined orientations to resist sustained tension loads. b. Mechanical anchors and adhesive anchors not defined in 4.a.	X –	– X	ACI 318: 17.8.2.4 ACI 318: 17.8.2	---
5. Verifying use of required design mix.	–	X	ACI318: Ch. 19, 26.4.3, 26.4.4	1904.1, 1904.2 1908.2, 1908.3
6. Prior to concrete placement, fabricate specimens for strength tests, per form slump and air content tests, and determine the temperature of the concrete.	X	–	ASTM C172 ASTM C31 ACI 318: 26.4, 26.12	1908.10
7. Inspection of concrete and shotcrete placement for proper application techniques.	X	–	ACI 318: 26.5	1908.6, 1908.7, 1908.8
8. Verify maintenance of specified curing temperature and techniques.	–	X	ACI 318: 26.5.3–26.5.5	1908.9
9. Inspect prestressed concrete for: a. Application of prestressing forces; and b. Grouting of bonded prestressing tendons	X X	– –	ACI 318: 26.10	--- ---
10. Inspect erection of precast concrete members.	–	X	ACI 318: Ch. 26.8	---
11. Verification of in-situ concrete strength, prior to stressing of tendons in post-tensioned concrete and prior to removal of shores and forms from beams and structural slab.	–	X	ACI 318: 26.11.2	---
12. Inspect formwork for shape, location and dimensions of the concrete member being formed.	–	X	ACI 318: 26.11.1.2(b)	---

NOTES:
1. WHERE APPLICABLE, SEE ALSO SECTION 1707.1, SPECIAL INSPECTION FOR SEISMIC RESISTANCE.
2. TABLES TAKEN DIRECTLY FROM IBC FOR REFERENCE.

MASONRY INSPECTION TASK	FREQUENCY (a)	REFERENCE FOR CRITERIA		IBC REFERENCE
	LEVEL 3	TMS 402	TMS 602	
1. As masonry construction begins, verify that the following are in compliance: a. Proportions of site-prepared mortar. b. Grade, type and size of reinforcement connectors and anchor bolts. c. Sample panel construction.	P P C		ART. 2.1, 2.6A, & 2.6C ART. 3.4 ART. 1.6D	
2. Prior to grouting, verify that the following are in compliance: a. Grout space. b. Placement of reinforcement, connectors, & anchor bolts. c. Proportions of site-prepared grout.	C C P	SEC. 6.1, 6.3.1, 6.3.6, & 6.3.7	ART. 3.2D & 3.2F ART. 3.2E & 3.4 ART. 2.6B & 2.4 G.1.b	
3. Verify compliance of the following during construction: a. Materials and procedures with the approved submittals. b. Placement of masonry units and mortar joint construction. c. Size and location of structural members. d. Type, size, and location of anchors, including other details of anchorage of masonry to structural members, frames, or other construction. e. Welding of reinforcement. f. Preparation, construction, and protection of masonry during cold weather (temperature below 40°F (4.4°C) or hot weather (temperature above 90°F (32.2°C). g. Placement of grout is in compliance.	P P P C C P C	SEC. 1.2.1(e), 6.2.1, & 6.3.1 SEC. 6.1.6.1.2	ART. 1.5 ART. 3.3B ART. 3.3F ART. 1.8C & 1.8D ART. 3.5	1705.04, 2104 & 2105
4. Observe preparation of grout specimens, mortar specimens, and/or prisms.	C		ART. 1.4 B.2.a.3, 1.4 B.2.b.3, 1.4 B.2.c.3, 1.4 b.3, & 1.4 B.4	

NOTES:
(a) Frequency refers to the frequency of inspection, which may be continuous during the listed task or periodically during the listed task, as defined in the table.
NR=Not Required, P=Periodic, C=Continuous
(b) Required for the first 5000 sq. ft. (465 sq. m.) of AAC masonry.
(c) Required after the first 5000 sq. ft. (465 sq. m.) of AAC masonry.

STEEL: VERIFICATION AND INSPECTION	CONTINUOUS	PERIODIC	REFERENCED STANDARD (NOTE1)	IBC REFERENCE
1. Material verification of high-strength bolts, nuts and washers: a. Identification markings to conform to ASTM standards specified in the approved construction documents. b. Manufacturer's certificate of compliance required.	– –	X X	APPLICABLE ASTM MATERIAL SPECS AISC 360, SEC. A3.3	
2. Inspection of high-strength bolting: a. Bearing-type connections. AISC 360, Section M2.5 1704.3.3	–	X		
3. Material verification of structural steel: a. Identification markings to conform to ASTM standards specified in the approved construction documents. b. Manufacturers' certified mill test reports.	–	–	AISC 360, SEC. M2.5 ASTM A 6 OR ASTM A 568	
4. Material verification of weld filler materials: a. Identification markings to conform to AWS specification in the approved construction documents. b. Manufacturer's certificate of compliance required.	– –	– –	AISC 360, SEC. A3.5	
5. Inspection of welding: a. Structural steel: 1) Complete and partial penetration groove welds. 2) Multipass fillet welds. 3) Single-pass fillet welds > 5/16" 4) Single-pass fillet welds = 5/16" 5) Floor and roof deck welds. b. Reinforcing steel: 1) Verification of weld ability of reinforcing steel other than ASTM A 706. 2) Reinforcing steel-resisting flexural and Axial forces in intermediate and special Moment frames, and boundary elements of Special reinforced concrete shear walls and shear reinforcement. 3) Shear reinforcement. 4) Other reinforcing steel.	– X X X – – – – X X –	– – – – X X – X – – X	AWS D1.1 AWS D1.1 AWS D1.1 AWS D1.1 AWS D1.3 AWS D1.4 ACI 318: 3.5.2	
6. Inspection of steel frame joint details for compliance with approved construction documents: a. Details such as bracing and stiffening. b. Member locations. c. Application of joint details at each connection.	– – – –	X – – –		

NOTES:
1. WHERE APPLICABLE SEE ALSO SECTION 1701.1, SPECIAL INSPECTION FOR SEISMIC RESISTANCE.
2. TABLES TAKEN DIRECTLY FROM IBC FOR REFERENCE.

STEEL: CONSTRUCTION OTHER THAN STRUCTURAL STEEL: VERIFICATION AND INSPECTION	CONTINUOUS	PERIODIC	REFERENCED STANDARD (NOTE1)	IBC REFERENCE
1. Material verification of cold-formed steel deck: a. Identification markings to conform to ASTM standards specified in the approved construction documents. b. Manufacturer's certified test reports.	– –	X	APPLICABLE ASTM MATERIAL STANDARDS	
2. Inspection of welding: a. Cold formed steel deck: 1) Floor and roof deck welds. b. Reinforcing steel: 1) Verification of weldability of reinforcing steel other than ASTM A 706. 2) Reinforcing steel resisting flexural and axial forces in intermediate and special moment frames, and boundary elements of special structural walls of concrete and shear reinforcement. 3) Shear reinforcement. 4) Other reinforcing steel.	– – X – X	X X – X –	AWS D1.3 ACI 318: 3.5.2 AWS D1.4	
SOILS: 1. Verify materials below shallow foundations are adequate to achieve the design bearing apacity. 2. Verify excavations are extended to proper depth and have reached proper material. 3. Perform classification and testing of compacted fill materials. 4. Verify use of proper materials, densities and lift thicknesses during placement and compaction of compacted fill. 5. Prior to placement of compacted fill, inspect subgrade and verify that site has been properly prepared. Not the responsibility of the structural engineer. Special inspection certificate to be completed by geotechnical engineer.	– – – X –	X X X – X		
EXPANSION, SCREW, AND EPOXY BOLTS: 1. During placement of all expansion, screw, & epoxy bolts, for visual verification of hole diameter and depth and placement of bolt and/or epoxy.	–	X		

DUTIES AND RESPONSIBILITIES OF THE SPECIAL INSPECTOR:

A) THE SPECIAL INSPECTOR SHALL OBSERVE THE WORK ASSIGNED TO BE CERTAIN IT CONFORMS WITH THE APPROVED DESIGN DRAWINGS AND SPECIFICATION.

B) THE SPECIAL INSPECTOR SHALL FURNISH INSPECTION REPORTS TO THE BUILDING OFFICIAL, AND TO THE ENGINEER.

C) UPON COMPLETION OF THE ASSIGNED WORK THE ENGINEER OR ARCHITECT SHALL COMPLETE AND SIGN THE APPROPRIATE FORMS CERTIFYING THAT TO THE BEST OF HIS KNOWLEDGE THE WORK IS IN CONFORMANCE WITH THE APPROVED PLANS AND SPECIFICATIONS AND THE APPLICABLE WORKMANSHIP PROVISIONS OF THE CODE.

PK ASSOCIATES, LLC
6900 E. Belleview Ave. #200
Greenwood Village, Colorado 80111
Phone: (720) 799-1058
Email: cadd@pkastructural.com
Website: www.pkastructural.com

ISSUED FOR BID

NO	BY	DATE	REVISIONS	DATE	APP.

Registered Professional Engineer (Civil) CERTIFICATE NO. 70374 JAMES APPLEYARD Date Signed 10/31/25 ARIZONA, U.S.A.

PREPARED BY: PKA
DESIGNED BY: JA
DRAWN BY: NS
CHECKED BY: JA SCALE: AS NOTED
DATE SEP 2025
JOB NO. 23364

TITLE
GENERAL STRUCTURAL NOTES

JOB
TOWN OF JEROME
WASTEWATER TREATMENT PLANT
YAVAPAI AZ

PREPARED BY:
PACE Advanced Water Engineering
8723 E. VIA de COMMERICO, SUITE A-204 | SCOTTSDALE, CA 85258
P: (408) 991-3595 | www.pacewater.com
TAYLOR B. PIERCE R.C.E 70097 DATE

SHEET
S1.2
53 OF 99 SHEETS
JOB NO. 23364

THESE DRAWINGS ARE THE PROPERTY OF P.A.C.E. AND SHALL NOT BE REPRODUCED IN ANY MANNER NOR BE USED FOR CONSTRUCTION UNLESS STAMPED "ISSUED FOR CONSTRUCTION".

PK ASSOCIATES, LLC
6900 E. Belleview Ave. #200
Greenwood Village, Colorado 80111
Phone: (720) 799-1058
Email: cadd@pkastructural.com
Website: www.pkastructural.com

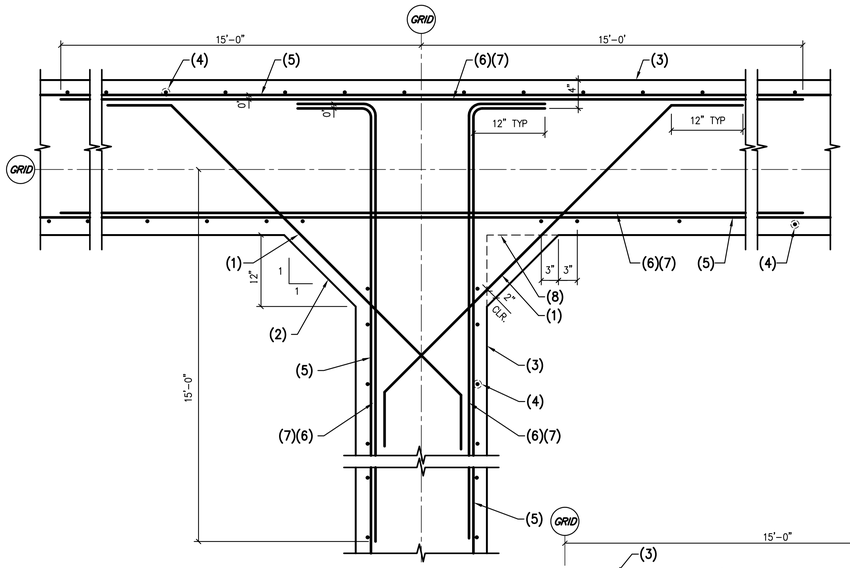

NOTES:
1. #4 AT 6" O.C. (NOT REQ'D AT 06A).
2. CHAMFER AT CORNER.
3. CONCRETE WALL.
4. VERTICAL WALL REINFORCING PER SHEET S3.1.
5. #6 AT 9" O.C. EACH FACE TYPICAL HORIZONTAL WALL REINFORCING. OPTION PROVIDE.
6. PROVIDE ADDITIONAL #6 AT 9" O.C. EACH FACE HORIZONTAL REINFORCING AT CORNERS (NET 4.5" O.C.).
7. PROVIDE ADDITIONAL HORIZONTAL REINFORCING FROM TOP OF WALL DOWN TO 5'-0" ABOVE MAT SLAB.
8. NO CHAMFER AT 06A.

BOLT DIAMETER	VERT BOLT EMBEDMENT LENGTH	HORIZ BOLT EMBEDMENT LENGTH	HEADED STUD FILLET WELD SIZE, "S".
1/2"	6"	4"	1/4"
5/8"	6"	4"	5/16"
3/4"	7"	5"	5/16"
7/8"	8"	6"	5/16"
1"	9"	7"	3/8"
1 1/8"	10"	8"	-----
1 1/4"	11"	9"	-----

NOTES:
PROVIDE ANCHORS, ANCHOR BOLTS AND EXPANSION BOLTS PER THIS SCHEDULE UNLESS NOTED ON PLANS OR DETAILS.

EXPANSION OR ADHESIVE BOLTS USED IN MASONRY SHALL HAVE I.C.B.O. APPROVAL IN MASONRY.

AT "ANCHORS" USE 3/16" FILLET WELD("S").

THICKNESS OF DRYPACK DOES NOT APPLY TOWARDS EMBEDMENT.

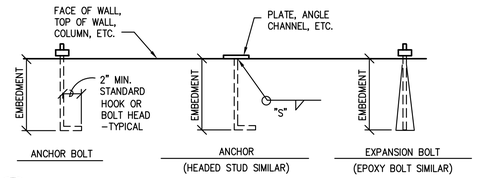

03 TYPICAL ANCHOR, ANCHOR BOLT, AND EXPANSION BOLT SCHEDULE
NO SCALE

STANDARD ASTM A615 (60 KSI) REBAR								
	CLASS B TENSION SPLICE LENGTHS						COMP. BARS	
CONC. PSI	f'c = 2,500 PSI/ f'c = 3,000 PSI		f'c = 4,000 PSI		f'c = 5,000 PSI AND HIGHER		f'c = ALL	
BAR LOCATION	REGULAR CLASS	TOP CLASS	REGULAR CLASS	TOP CLASS	REGULAR CLASS	TOP CLASS	STD LAP	ENCLOSED W/ SPIRAL TIES
SIZE								
#3	24"	31"	19"	24"	17"	22"	12"	12"
#4	32"	41"	25"	33"	23"	29"	15"	12"
#5	39"	51"	31"	41"	28"	36"	19"	14"
#6	47"	61"	37"	49"	34"	43"	23"	17"
#7	69"	89"	54"	71"	49"	63"	26"	20"
#8	78"	102"	62"	81"	56"	72"	30"	23"
#9	88"	115"	70"	91"	63"	81"	34"	25"
#10	100"	129"	79"	102"	70"	92"	38"	29"
#11	110"	143"	87"	113"	78"	102"	42"	32"

NOTES:
1. TOP BARS ARE ANY HORIZONTAL BARS PLACED SO THAT MORE THAN 12" OF FRESH CONCRETE IS CAST IN THE MEMBER BELOW THE REINFORCEMENT.
2. UNLESS NOTED OTHERWISE, LAP SPLICES IN CONCRETE BEAMS, SLABS AND WALLS SHALL BE CLASS "B" TENSION SPLICES. CONCRETE COLUMNS SHALL USE COMPRESSION LAP SPLICES.
3. CONTACT STRUCTURAL ENGINEER IF CENTER TO CENTER SPACING OF REINFORCING IS LESS THAN OR EQUAL TO 3 BAR DIAMETERS, <3db OR 2db CLEAR SPACING BETWEEN BARS.

01 LAP SCHEDULE FOR REINFORCING STEEL
NO SCALE

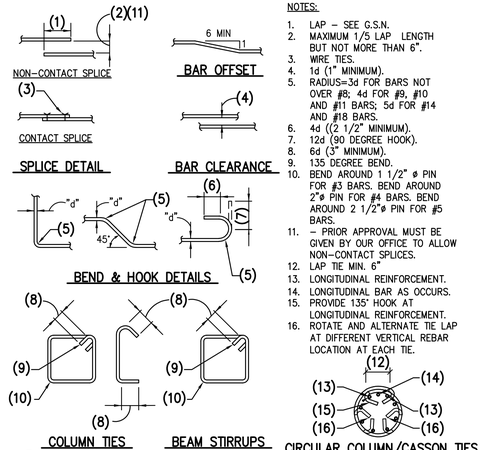

NOTES:
1. LAP – SEE G.S.N.
2. MAXIMUM 1/5 LAP LENGTH BUT NOT MORE THAN 6".
3. WIRE TIES.
4. 1d (1" MINIMUM).
5. RADIUS=3d FOR BARS NOT OVER #8; 4d FOR #9, #10 AND #11 BARS; 5d FOR #14 AND #18 BARS.
6. 4d ((2 1/2" MINIMUM).
7. 12d (90 DEGREE HOOK).
8. 6d (3" MINIMUM).
9. 135 DEGREE BEND.
10. BEND AROUND 1 1/2" ø PIN FOR #3 BARS. BEND AROUND 2"ø PIN FOR #4 BARS. BEND AROUND 2 1/2"ø PIN FOR #5 BARS.
11. – PRIOR APPROVAL MUST BE GIVEN BY OUR OFFICE TO ALLOW NON-CONTACT SPLICES.
12. LAP TIE MIN. 6"
13. LONGITUDINAL REINFORCEMENT.
14. LONGITUDINAL BAR AS OCCURS.
15. PROVIDE 135° HOOK AT LONGITUDINAL REINFORCEMENT.
16. ROTATE AND ALTERNATE TIE LAP AT DIFFERENT VERTICAL REBAR LOCATION AT EACH TIE.

04 TYPICAL CONCRETE REINFORCING BAR DETAILS
NO SCALE

STANDARD ASTM A615 (60 KSI) REBAR							
BAR SIZE	EMBEDMENT		EXTENSION		MINIMUM OUTSIDE DIAMETER OF BEND (INCHES)	CLASS A STRAIGHT BAR DEVELOPMENT	
	3000 PSI CONCRETE	5000 PSI CONCRETE & HIGHER	90° HOOK	180° HOOK		5000 PSI & HIGHER	3000 PSI
#3	6.00	6.00	4.5	2.5	3.00	13	17
#4	7.75	6.00	6.0	2.5	4.00	17	22
#5	9.75	7.50	7.5	2.5	5.00	22	28
#6	11.50	9.00	9.0	3.0	6.00	26	33
#7	13.50	10.50	10.5	3.5	7.00	38	48
#8	15.50	12.00	12.0	4.0	8.00	43	55
#9	17.50	13.50	13.75	4.75	11.28	48	62
#10	19.50	15.25	15.25	5.25	12.70	54	70
#11	21.75	16.75	17.00	5.75	14.10	60	78

NOTES:
1. EMBEDMENT LENGTH IS BASED ON 2 1/2" MINIMUM SIDE COVER AND 2" MINIMUM END COVER.
2. CONTACT STRUCTURAL ENGINEER IF CENTER TO CENTER SPACING OF REINFORCING IS LESS THAN OR EQUAL TO 3 BAR DIAMETERS <3db OR 2db CLEAR SPACING BETWEEN BARS.
3. WHERE CLEAR COVER <db, MULTIPLY EMBEDMENT AND STRAIGHT BAR DEVELOPMENT BY 1.5.

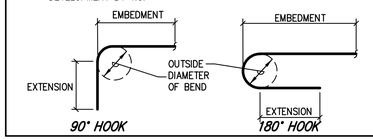

02 HOOKED DOWEL DEVELOPMENT LENGTH IN TENSION (INCHES)
NO SCALE

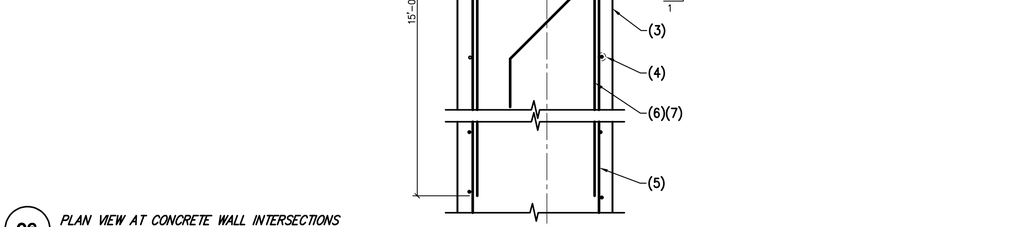

06 PLAN VIEW AT CONCRETE WALL INTERSECTIONS
06A AS NOTED
NO SCALE

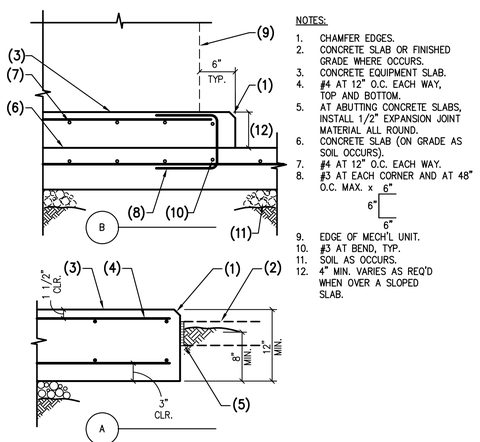

NOTES:
1. CHAMFER EDGES.
2. CONCRETE SLAB OR FINISHED GRADE WHERE OCCURS.
3. CONCRETE EQUIPMENT SLAB.
4. #4 AT 12" O.C. EACH WAY, TOP AND BOTTOM.
5. AT ABUTTING CONCRETE SLABS, INSTALL 1/2" EXPANSION JOINT MATERIAL ALL ROUND.
6. CONCRETE SLAB (ON GRADE AS SOIL OCCURS).
7. #4 AT 12" O.C. EACH WAY.
8. #3 AT EACH CORNER AND AT 48" O.C. MAX. x 6" 6" 6"
9. EDGE OF MECH'L UNIT.
10. #3 AT BEND, TYP.
11. SOIL AS OCCURS.
12. 4" MIN. VARIES AS REQ'D WHEN OVER A SLOPED SLAB.

08 CONCRETE EQUIPMENT PAD
NO SCALE

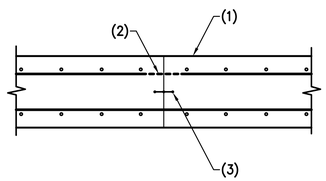

NOTES:
1. CONCRETE WALL.
2. CUT EVERY OTHER BAR ON EACH FACE OF WALL. STAGGER CUT BARS.
3. CONT. WATERSTOP, GREENSTREAK PVC RIBBED WITH CENTER BULB, MODEL #735 PER MECH'L, (OR APPROVED EQUAL.)

NOTE:
LOCATION OF VERTICAL WALL C.J. TO BE AT A MAXIMUM OF TWICE THE WALL HEIGHT.

07 PLAN – WALL C.J.
NO SCALE

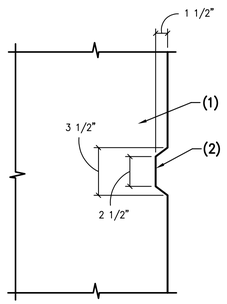

NOTES:
1. CONCRETE.
2. KEYED JOINT – REMOVE FORM MATERIAL PRIOR TO PLACING ADJACENT CONCRETE.

NOTE:
ALL DIMENSIONS ARE ± 1/2".

05 TYPICAL KEY IN CONCRETE
NO SCALE

NO	BY	DATE	REVISIONS	DATE	APP.

THESE DRAWINGS ARE THE PROPERTY OF P.A.C.E. AND SHALL NOT BE REPRODUCED IN ANY MANNER NOR BE USED FOR CONSTRUCTION UNLESS STAMPED "ISSUED FOR CONSTRUCTION".

Registered Professional Engineer (Civil) CERTIFICATE NO. 70374 JAMES APPLEYARD 10/31/25 Date Signed ARIZONA, U.S.A.

PREPARED BY: PKA
DESIGNED BY: JA
DRAWN BY: NS
CHECKED BY: JA
DATE: SEP 2025
JOB NO.: 23364
SCALE: AS NOTED

TITLE: TYPICAL DETAILS

JOB: TOWN OF JEROME WASTEWATER TREATMENT PLANT YAVAPAI AZ

ISSUED FOR BID

PREPARED BY:
PACE
Advanced Water Engineering
8723 E. VIA de VENTURA, SUITE 240, SCOTTSDALE, CA 85258
P: (480) 991-3995 | www.pacewater.com
TAYLOR B. PIERCE R.C.E 70097 DATE

SHEET S1.3
54 OF 99 SHEETS

JOB NO. 23364

PK ASSOCIATES, LLC
6900 E. Belleview Ave. #200
Greenwood Village, Colorado 80111
Phone: (720) 799-1058
Email: cadd@pkastructural.com
Website: www.pkastructural.com

NOMINAL BEAM DEPTH "D"	NUMBER OF 1" DIA. ASTM, F3125 BOLTS
UP TO 7"	2
8" – 11"	2
12" – 14"	3
15" – 17"	4
18" – 20"	5
21" – 23"	6
24" – 29"	7
30" – 32"	8
33" – 35"	9
36"	10

FRAMING NOTES:

1. THE TYPICAL STEEL BEAM TO STEEL COLUMN OR STEEL BEAM TO STEEL BEAM CONNECTION CONSISTS OF 3/8" SINGLE SHEAR PLATES WITH 1"ø. ASTM F3125 BOLTS. USE 5/8" SHEAR PLATES WHERE "D" = 27" OR GREATER.
2. ALL BOLTS SHALL BE INSTALLED USING SHORT SLOTTED HOLES IN EITHER THE BEAM WEB OR THE SHEAR PLATE PER LATEST AISC SPECIFICATIONS.

18 BOLT SCHEDULE FOR TYPICAL STEEL CONNECTIONS
NO SCALE

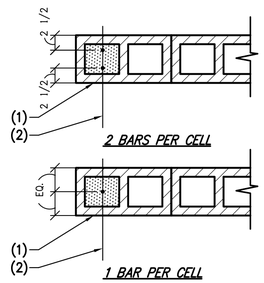

NOTES:

1. MASONRY WALL.
2. VERTICAL WALL REINFORCING.

NOTE:
SEE PLANS AND/OR TYPICAL DETAILS FOR NUMBER OF CELLS REINFORCED (GREATER REQUIREMENT GOVERNS).

15 TYPICAL REINFORCING PLACEMENT – EACH FACE
NO SCALE

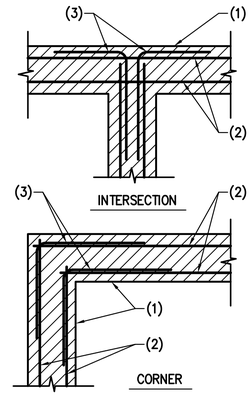

NOTES:

1. MASONRY WALL.
2. BOND BEAM REINFORCING.
3. CORNER BARS SAME SIZE AND SPACING AS HORIZONTAL REINFORCING – LAP PER G.S.N. (24" MINIMUM).

12 MASONRY BOND BEAM AT INTERSECTING WALLS
NO SCALE

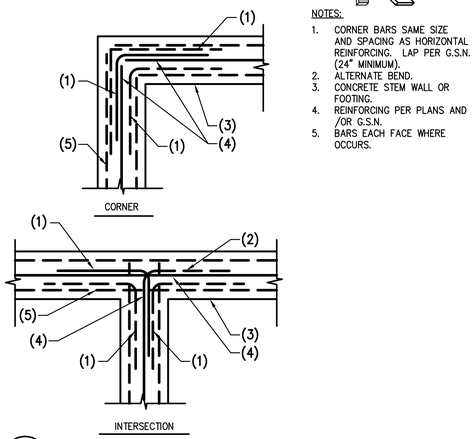

NOTES:

1. CORNER BARS SAME SIZE AND SPACING AS HORIZONTAL REINFORCING. LAP PER G.S.N. (24" MINIMUM).
2. ALTERNATE BEND.
3. CONCRETE STEM WALL OR FOOTING.
4. REINFORCING PER PLANS AND /OR G.S.N.
5. BARS EACH FACE WHERE OCCURS.

07 PLAN – CORNER REINFORCING IN CONCRETE GRADE BEAM WALL AND/OR FOOTING
NO SCALE

H	t	VERTICAL WALL REINFORCING		T	HEEL	TOE	FOOTING HEEL REINF.	SHEAR KEY		REMARKS
		WALL	DOWELS					Sd	Sw	
0'–0" TO 3'–0"	8"	#5 AT 18" O.C.	---	15"	0'–8"	0'–8"	---	---	---	SEE NOTE 1 & 2
3'–1" TO 5'–0"	8"	#5 AT 18" O.C.	---	12"	1'–1"	1'–1"	#5 AT 18" O.C.	12"	8"	SEE NOTE 1 & 2
5'–1" TO 7'–0"	8"	#5 AT 14" O.C.	---	12"	1'–7"	1'–6"	#5 AT 18" O.C.	24"	8"	SEE NOTE 1 & 2
7'–1" TO 9'–0"	8"	#5 AT 12" O.C.	#6 AT 12" O.C.	14"	2'–2"	2'–0"	#5 AT 12" O.C.	32"	8"	SEE NOTE 1 & 2
9'–1" TO 10'–0"	8"	#5 AT 12" O.C.	#7 AT 12" O.C.	20"	2'–8"	2'–6"	#5 AT 8" O.C.	32"	8"	SEE NOTE 1 & 2

NOTES:

1. USE #4 AT 12" O.C. HORIZONTALS.
2. LAP AND/OR EMBED ALL DOWELS 40 BAR DIAMETERS MINIMUM.

NOTE: REF DETAIL 20 FOR RETAINING WALLS ABOVE 10'–0" TALL

17 CONCRETE RETAINING WALL
NO SCALE

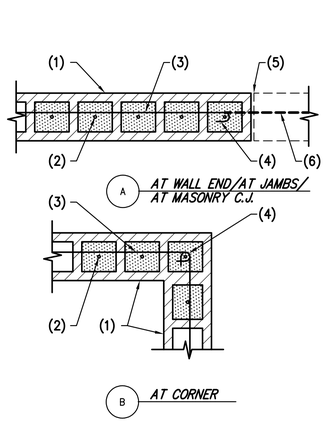

NOTES:

1. MASONRY WALL.
2. VERT. REINF. PER SCHEDULE.
3. HORIZ. REINF. PER SCHEDULE.
4. STANDARD HOOK PER TYP. DETAIL AT ENDS OF ALL WALLS.
5. MASONRY WALL AT C.J. AS OCCURS.
6. HORIZONTAL CONT. AT BOND BEAMS PER DETAIL 15.

16 PLAN VIEW – TYPICAL HORIZONTAL REINF. AT END OF WALL
NO SCALE

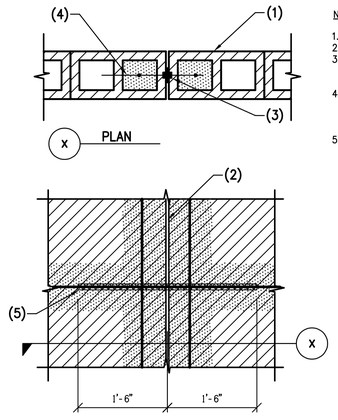

NOTES:

1. MASONRY WALL.
2. CONTROL JOINT.
3. CONTROL JOINT MATERIAL PER ARCHITECTURAL DRAWINGS AND SPECIFICATIONS.
4. 1 VERTICAL BAR EACH SIDE IN SOLID GROUTED CELLS TO MATCH VERTICAL WALL REINFORCING.
5. CONTINUOUS BOND BEAM BARS – WRAP BARS WITH MASTIC FOR BOND BREAK.

NOTE:
BOND BEAM BARS SHALL NOT BE LAPPED WITHIN 8'–0" OF CONTROL JOINT.

13 CONTROL JOINT IN MASONRY WALL
NO SCALE

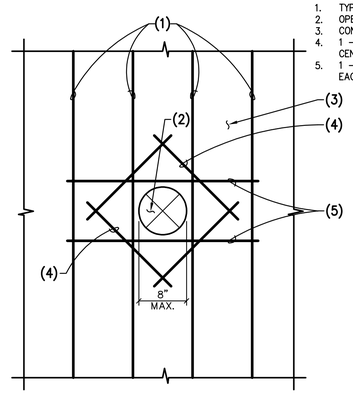

NOTES:

1. TYPICAL WALL REINF.
2. OPENING IN CONCRETE WALL.
3. CONCRETE WALL.
4. 1 – #5 DIAG. BARS IN THE CENTER OF WALL.
5. 1 – #5 TOP AND BOTTOM EACH FACE.

10 TYPICAL SMALL OPENING IN CONCRETE WALL
NO SCALE

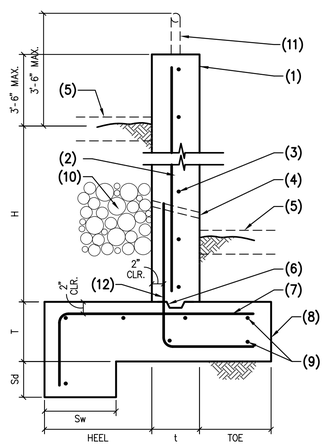

NOTES:

1. CONCRETE WALL.
2. VERTICAL WALL REINFORCING.
3. HORIZONTAL REINFORCING.
4. 1" DIA. WEEP HOLES AT 32" O.C.
5. FINISHED GRADE OR CONCRETE SLAB WHERE OCCURS.
6. CONTINUOUS KEY – SEE TYPICAL KEY IN CONCRETE DETAIL.
7. FOOTING HEEL REINFORCING.
8. CONCRETE FOOTING.
9. #4 AT 16" O.C.
10. 1 1/2" DIA. ROCK IN 12" X 12" X CONTINUOUS ROCK POCKET.
11. HANDRAIL ATTACHMENT BY OTHERS.
12. DOWELS TO MATCH AND LAP WALL REINFORCING U.N.O IN SCHEDULE.

17 CONCRETE RETAINING WALL
NO SCALE

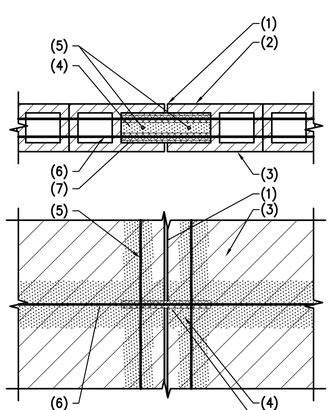

NOTES:

1. RAKE JOINT.
2. OPEN END MASONRY UNIT.
3. MASONRY WALL.
4. GROUT SOLID.
5. VERT. BAR EACH SIDE OF CONTROL JOINT TO MATCH VERT. WALL REINF.
6. HORIZ. REINF. CONT. THRU CONTROL JOINT.
7. WRAP HORIZ. BAR 8" EACH SIDE OF JOINT W/ MASTIC.

14 CONTROL JOINT IN MASONRY BEAM
NO SCALE

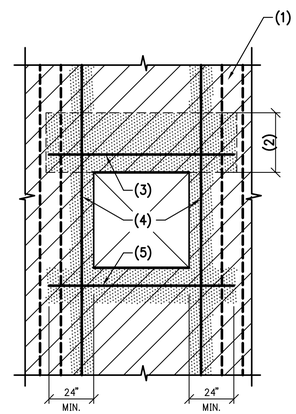

JAMB BARS	WALL OPENING
2	0'–0" → 4'–0"
3	4'–1" → 8'–0"
4	8'–1" → 10'–0"
5	10'–1" → 12'–0"
2 BARS IN FIRST 4 CELLS (8 BARS)	12'–1" → 16'–0"
2 BARS IN FIRST 6 CELLS (12 BARS)	16'–1" → 20'–0"
FOR OPENINGS LARGER THEN 20'–0" SEE PLAN. IF SPECIAL JAMB BARS ARE NOT SHOWN. USE WALL BRACES TO STRUCTURE.	

NOTES:

1. MASONRY WALL.
2. DEPTH OF MASONRY LINTEL BEAM – SEE PLANS AND DETAILS.
3. LINTEL REINFORCING.
4. VERTICAL BAR IN GROUTED CELL TO MATCH VERTICAL WALL REINFORCING – FULL HEIGHT OF WALL – SEE SCHEDULE BELOW, ONE BAR PER CELL.
5. 2 #5 BARS IN 8" DEEP SOLID GROUTED BOND BEAM – HOOK BARS UP AT CORNERS.

11 TYPICAL OPENING IN MASONRY WALL
NO SCALE

NO	BY	DATE	REVISIONS	DATE	APP.

Registered Professional Engineer (Civil)
CERTIFICATE NO.
70374
JAMES APPLEYARD
10/31/25
Date Signed
ARIZONA, U.S.A.

PREPARED BY: PKA
DESIGNED BY: JA
DRAWN BY: NS
CHECKED BY: JA
SCALE: AS NOTED
DATE: SEP 2025
JOB NO.: 23364

TITLE: TYPICAL DETAILS

JOB: TOWN OF JEROME
WASTEWATER
TREATMENT PLANT
YAVAPAI AZ

ISSUED FOR BID

PREPARED BY:
PACE
Advanced Water Engineering
8723 E. Via de Commercio, Suite A, Scottsdale, CA 85258
P: (408) 991-3595 | www.pacewater.com
TAYLOR B. PIERCE R.C.E 70097 DATE

SHEET
S1.4
55 OF 99 SHEETS

JOB NO. 23364

THESE DRAWINGS ARE THE PROPERTY OF P.A.C.E. AND SHALL NOT BE REPRODUCED IN ANY MANNER NOR BE USED FOR CONSTRUCTION UNLESS STAMPED "ISSUED FOR CONSTRUCTION".

PK ASSOCIATES, LLC
6900 E. Belleview Ave. #200
Greenwood Village, Colorado 80111
Phone: (720) 799-1058
Email: cadd@pkastructural.com
Website: www.pkastructural.com

NOTES:

1. 8" CONCRETE WALL.
2. #7 DOWELS AT 8" O.C.
3. #5 AT 12" VERTICALS.
4. #4 AT 12" HORIZONTALS.
5. 28" MIN.
6. L2x2x1/4 W/ 1/2"ø H.S. AT 18" O.C.
7. GRATING AND ATTACHMENT BY OTHERS.
8. L3x3x1/4 WITH 1/2" HILTI KWIK HUS EZ SCREW ANCHORS AT 24" O.C.
9. CONCRETE FOOTING W/ #5 AT 12" O.C. E.W. TOP & BOTTOM.
10. 1/2"x8"x5" STEEL PLATE WITH 2- 1/2"ø H.S. AT 5" O.C.
11. HANDRAIL AND ATTACHMENT BY OTHERS.
12. CONCRETE SLAB OR FINISHED GRADE AS OCCURS.
13. WATERSTOP PER PACE PER SPECIFICATION SECTION 03 1500.

19 CONCRETE RETAINING WALL AT CHLORINE CONTACT CHANNEL
NO SCALE

NOTES:

1. 8" CONCRETE WALL.
2. #5 AT 12" O.C.
3. #8 AT 12" O.C.
4. 1" DIA. WEEP HOLES AT 32" O.C.
5. FINISHED GRADE OR CONCRETE SLAB WHERE OCCURS.
6. CONTINUOUS KEY – SEE TYPICAL KEY IN CONCRETE DETAIL.
7. #5 AT 8" O.C.
8. CONCRETE FOOTING.
9. HANDRAIL ATTACHMENT BY OTHERS.
10. 1 1/2" DIA. ROCK IN 12" X 12" X CONTINUOUS ROCK POCKET.

20 12'-0" TALL RETAINING WALL
NO SCALE

NO	BY	DATE	REVISIONS	DATE	APP.

Registered Professional Engineer (Civil)
CERTIFICATE NO.
70374
JAMES APPLEYARD
10/31/25
Date Signed
ARIZONA, U.S.A.

PREPARED BY: PKA
DESIGNED BY: JA
DRAWN BY: NS
CHECKED BY: JA
SCALE: AS NOTED
DATE: SEP 2025
JOB NO.: 23364

TITLE: TYPICAL DETAILS

JOB: TOWN OF JEROME
WASTEWATER
TREATMENT PLANT
YAVAPAI AZ

ISSUED FOR BID

PREPARED BY:
PACE
Advanced Water Engineering
8723 E. VIA DE COMMERCIO, 1ST FLOOR, SCOTTSDALE, CA 85258
P: (480) 991-3595 | W: www.pacewater.com
TAYLOR B. PIERCE R.C.E. 70097 DATE

SHEET
S1.5
56 OF 99 SHEETS

JOB NO. 23364

THESE DRAWINGS ARE THE PROPERTY OF P.A.C.E. AND SHALL NOT BE REPRODUCED IN ANY MANNER NOR BE USED FOR CONSTRUCTION UNLESS STAMPED "ISSUED FOR CONSTRUCTION".

FOR GENERAL PRICING INFORMATION ONLY, COMPLETE DESIGN AND SHOP DRAWINGS TO BE SUPPLIED AND SUBMITTED BY STUD SUPPLIER

PK ASSOCIATES, LLC
6900 E. Belleview Ave. #200
Greenwood Village, Colorado 80111
Phone: (720) 799-1058
Email: cadd@pkastructural.com
Website: www.pkastructural.com

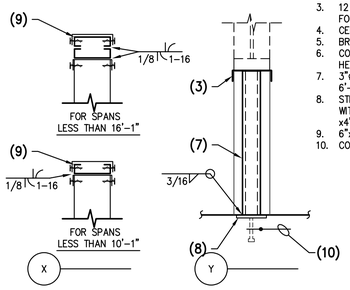

NOTES:
1. STEEL STUD.
2. STEEL HEADER PER SCHEDULE.
3. 12 GAGE STEEL STUD TRACK FOR SPANS LESS THAN 16'-1".
4. CEILING LINE.
5. BRACES PER DETAIL.
6. CONT. SPANDREL OPENING HEADER.
7. 3"ø. STEEL PIPE AT 6'-0" O.C.
8. STEEL PLATE 1/2"x5"x10" WITH 2- 1/2"ø HEADED STUDS x4" LONG AT 8" O.C.
9. 6"x16 GAGE (600 S200).
10. CONT. 1 #5 AT H.S.

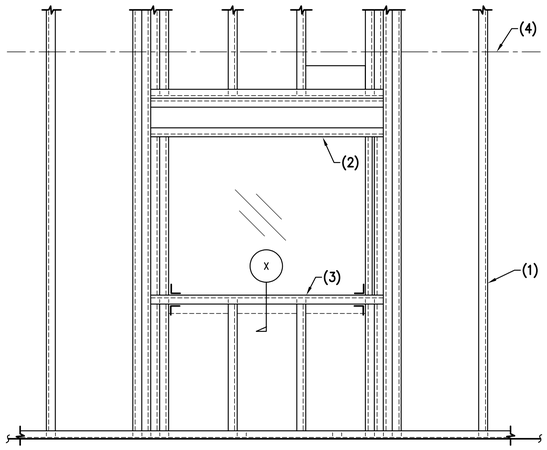

TYPICAL PUNCHED OPENING IN STUD WALL

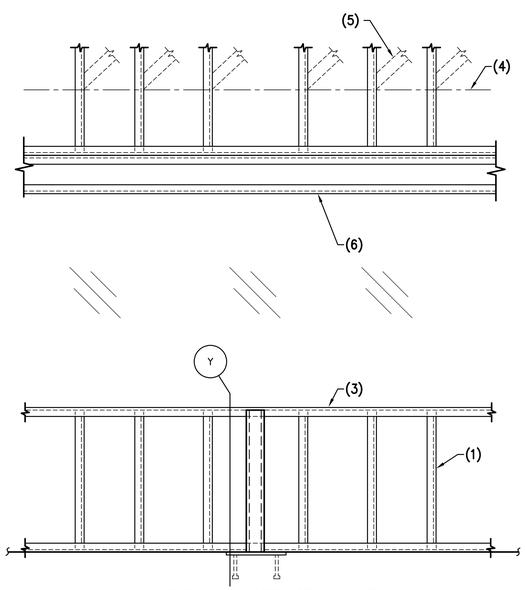

TYPICAL SPANDREL OPENING IN STUD WALL

CF7 TYPICAL OPENINGS IN STEEL STUD WALL

NO SCALE

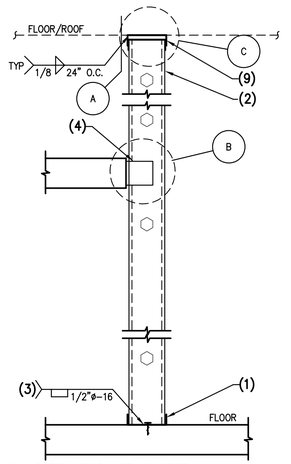

CF3 TYPICAL STEEL STUD ATTACHMENT

NO SCALE

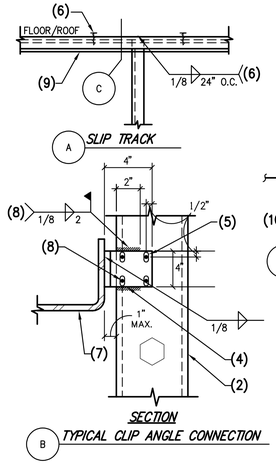

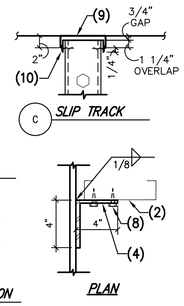

NOTES:
1. CONT. 16 GAGE "UNPUNCHED" STEEL TRACK. FOR ATTACHMENT SEE DETAIL 40.
2. STEEL STUD WALL.
3. USE 1/2"ø PUDDLE WELD AT 16" O.C. WHERE TRACK IS INSTALLED ON STEEL DECK (ROOF CONDITIONS).
4. STEEL CLIP ANGLE 4"x4"x12 GA. x 4" LONG AT EACH STUD.
5. PROVIDE 1" VERT. SLOTTED HOLE WHERE STUDS ARE FULL FLOOR HEIGHT.
6. HILTI SHOT PIN TO BOTTOM OF CONCRETE SLAB.
7. STEEL MEMBER (BENT PLATE AND BEAM FLANGE SHOWN OR CONTINUOUS EDGE ANGLE AT CONCRETE SLAB).
8. ALTERNATE TO WELD AT STUD TO CLIP ANGLE CONNECTION – 4 – #10 x 3/4" LONG SELF– TAPPING TEK SCREWS.
9. DEFLECTION TRACK TO ALLOW VERTICAL MOVEMENT – USE (2)– 16 GA. TRACKS BOTTOM TRACKS TO HAVE 2" LEGS. (ALLOW 3/4" DEFLECTION).
10. #10 x 3/4" LONG SELF–TAPPING SCREW EACH SIDE.

COLD FORMED STRUCTURAL STEEL FRAMING:

ALL COLD–FORMED STEEL FRAMING SHALL BE DESIGNED, FABRICATED AND ERECTED IN ACCORDANCE WITH MANUFACTURER'S RECOMMENDATIONS AND IN ACCORDANCE WITH THE LATEST EDITION OF "SPECIFICATIONS FOR THE DESIGN OF COLD–FORMED STEEL STRUCTURAL MEMBERS" BY THE AMERICAN IRON AND STEEL INSTITUTE.

STEEL FOR 14 AND 16 GAGE STUDS AND JOISTS, AND FOR ALL DIAGONAL TENSION STRAPS SHALL HAVE A MINIMUM YIELD STRENGTH OF 50 KSI. STEEL FOR ALL 18 AND 20 GAGE STUDS AND JOISTS, AND FOR ALL GAGES OF TRACK, ACCESSORIES AND BRIDGING SHALL HAVE A MINIMUM YIELD STRENGTH OF 33 KSI. STEEL SHALL BE GALVANIZED AT LOCATIONS EXPOSED TO WEATHER AND WHEREVER NOTED.

ALL STUD FRAMING (BOTH INTERIOR AND EXTERIOR) SHALL BE DESIGNED AND CONSTRUCTED TO ACCOMMODATE VERTICAL DEFLECTION OF THE STRUCTURE OF UP TO 1/2" LIVE LOAD DEFLECTION, UNLESS GREATER VALUE IS NOTED ON PLANS OR DETAILS. UTILIZE SLIP TRACK OR OTHER SIMILAR MEANS.

ALL STUDS SHALL BE SECURELY SEATED FOR FULL END BEARING ON TOP AND BOTTOM TRACK. UNLESS NOTED OTHERWISE, PROVIDE DOUBLE STUDS AT ALL JAMBS, CORNERS, INTERSECTIONS, BEAM BEARINGS AND JOIST BEARINGS. BRIDGING SHALL BE INSTALLED PER MANUFACTURER'S RECOMMENDATION WITH THE FOLLOWING MINIMUM REQUIREMENTS.

FOR WALLS WITH NO AXIAL LOAD, PROVIDE BRIDGING AT MID–HEIGHT FOR WALLS LESS THAN OR EQUAL TO 10'–0" HIGH, AND 5'–0" O.C. MAXIMUM FOR WALLS GREATER THAN 10'–0" HIGH. FOR AXIAL LOAD BEARING WALLS, PROVIDE BRIDGING EQUALLY SPACED AT 4'–0" MAXIMUM. IN ADDITION, BRIDGING SHALL BE PROVIDED AT ROOF LINES AND ELSEWHERE AS NOTED ON THE DRAWINGS. SOLID BLOCKING SHALL BE INSTALLED IN LIEU OF BRIDGING WHERE NOTED ON THE DRAWINGS.

STEEL STUD DETAILS AND GAGES DEPICATED ON STRUCTURAL DRAWINGS SHOW GENERAL STRUCTURAL REQUIREMENTS AND ARE FOR SCHEMATICS PURPOSE ONLY. THE CONTRACTOR SHALL BE REQUIRED TO SUBMIT SHOP DRAWINGS WITH DESIGN CALCULATIONS SEALED BY A REGISTERED ENGINEER FOR ALL STEEL STUD FRAMING AND ANY ADDITIONAL FRAMING MATERIALS REQUIRED FOR COMPLETE DESIGN SHALL BE INCORPORATED. CALCULATIONS SHALL INCLUDE DERIVATION OF WND LOADS PER SPECIFIED BUILDING CODE.

ALL WELDING SHALL BE PERFORMED BY WELDERS EXPERIENCED IN LIGHT GAGE STRUCTURAL STEEL FRAMING WORK. DO NOT NOTCH FLANGES OF JOISTS OR STUDS. DOUBLE UP FLOOR JOISTS AND BLOCKING UNDER PARTITIONS. PROVIDE BLOCKING AT SUPPORTS OF ALL JOISTS. DOUBLE UP STUDS AT JAMBS AND AS REQUIRED UNDER BEAMS IN BEARING WALLS.

TYPICAL STUDS SHALL BE DESIGNED FOR L/360 EXCEPT STUDS SUPPORTING VENEER SHALL BE DESIGN FOR MAXIMUM DEFLECTION OF L/600.

STEEL STUD SUPPLIER SHALL DESIGN AND SUPPLY STRUCTURAL STEEL AS REQUIRED FOR COMPLETE CONSTRUCTION OF VERTICAL WALL AWNINGS, SOFFITS, WING PLATES, FASCIA EXTENSIONS, ETC. ANY "RED METAL" OF FABRICATED STRUCTURAL STEEL REQUIRED TO COMPLETE WALL SYSTEMS SHALL BE DESIGNED AND INSTALLED BY STEEL STUD SUPPLIER.

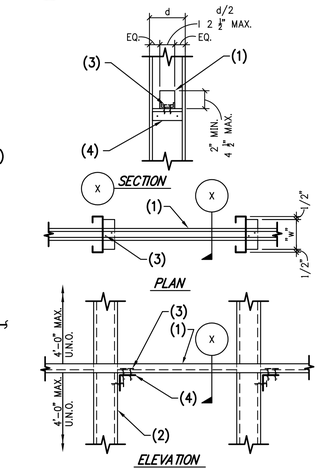

NOTES:
1. 1 1/2"x16GA.x 1/2" FLANGE CRC CONTINUOUS.
2. STUDS PER PLAN.
3. 2– #10 TEK SCREWS AT EACH STUD.
4. SIMPSON 'MSUBH3.25' CLIP WITH 2– #10 TEK SCREWS TO STUDS. ALT: L2x2x16GA.x 0'–5" LONG CLIP.

NOTE:
– 3– CRC BRIDGING PER FLOOR SEE TYPICAL DETAIL 56.
– AT LOCATIONS WHERE CRC IS INTERRUPTED SEE TYPICAL DETAIL 57.
– FOR TYPICAL NON–STRUCTURAL WALL BRIDGING SEE TYPICAL DETAIL 64.

CF6 TYPICAL BRIDGING DETAIL

NO SCALE

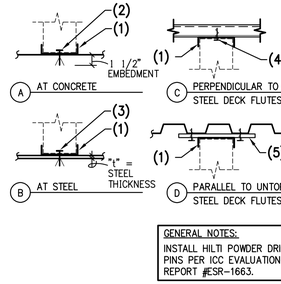

GENERAL NOTES:
INSTALL HILTI POWDER DRIVEN PINS PER ICC EVALUATION REPORT #ESR–1663.

NOTES:
1. STEEL TRACK. DEFLECTION TRACK AS OCCURS.
2. 3/8"ø SIMPSON DROP IN ANCHOR PER SCHEDULE.
3. 0.145ø HILTI X–EDNI POWDER DRIVEN PINS PER SCHEDULE. FOR "t"<1/2", FASTENERS MUST PENETRATE THRU STEEL BASE MATERIAL. FOR "t"=1/2", FASTENERS MUST PENETRATE 9/16" MIN. FOR "t">3/4", FASTENERS MUST PENETRATE 7/16" MIN.
4. #10x3/4" LONG TEKS SCREW PER SCHEDULE.
5. 12"x12x20 GAGE STEEL PLATE WITH 4 #10x 3/4" LONG TEKS SCREWS (ONE EACH CORNER). PLATE SPACING PER SCHEDULE.

TYPICAL TRACK ATTACHMENT

KEY	TYPE A	TYPE B	TYPE C	TYPE D
	ANCHOR SPACING	PIN SPACING	SCREW SPACING	PLATE SPACING
EXTERIOR	12" O.C.	12" O.C.	2 ROWS AT 6" O.C. (4" O.C. ROW SPACING)	12" O.C. (CONT. 12" WIDE PLATE)
INTERIOR	24" O.C.	16" O.C.	12" O.C.	48" O.C.

CF4 TYPICAL STEEL TRACK AT STRUCTURE

NO SCALE

MIN. STEEL STUD PROPERTIES GROSS

SIZE	GAGE	DESIGNATION	Sx(IN^3)	Ix(IN^4)	Fy (KSI)	SPACING	REMARKS L/360	REMARKS L/600
EXTERIOR								
8"	12	800S200–97	2.801	11.203	50	16" O.C.	27'–7"	23'–3"
8"	16	800S200–68	2.035	8.140	50	16" O.C.	24'–10"	20'–11"
6"	12	600S200–97	1.871	5.612	50	16" O.C.	21'–11"	18'–6"
6"	16	600S200–54	1.106	3.319	50	16" O.C.	18'–5"	15'–6"
6"	18	600S162–43	0.767	2.316	33	16" O.C.	16'–4"	13'–9"
6"	20	600S162–33	0.577	1.793	33	16" O.C.	13'–9"	12'–8"
INTERIOR								
6"	20–STRUCTURAL	600S162–33	0.598	1.793	33	16" O.C.	24'–0"	22'–0"
6"	20–STRUCTURAL	600S125–33	0.470	1.479	33	16" O.C.	22'–0"	20'–0"
ALL TRACKS SHALL BE SAME GAGE AS STUDS (18 GAGE MIN) W/ 2" FLANGE								

CF1 MINIMUM STEEL STUD PROPERTIES

NO SCALE

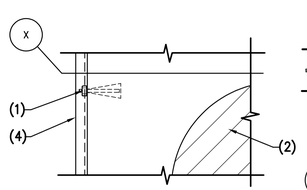

NOTES:
1. 1/2"ø EXP. BOLTS AT 24" O.C. DO NOT CUT VERTICAL REINFORCING.
2. CONCRETE OR MASONRY WALL.
3. LINE OF STEEL STUD WALL AS OCCURS.
4. STEEL STUDS.

CF5 TYPICAL STEEL STUD AT CONCRETE OR MASONRY WALL

NO SCALE

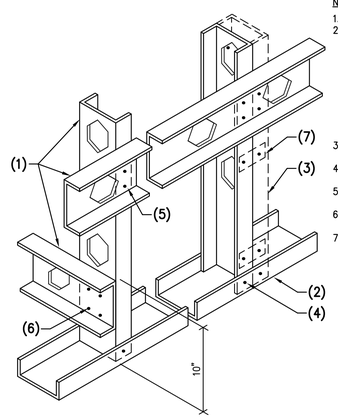

NOTES:
1. STEEL STUD.
2. UNPUNCHED STEEL STUD TRACK – ATTACHMENT REQUIRED 1 HILTI 3/4" LONG X–U TYPE POWDER DRIVEN PINS @ 8" O.C. (I.C.C. #ERS–1663) OR APPROVED EQUAL FOR ALL STUDS 6" OR SMALLER. FOR 8" STUDS USE 2 PINS AT 8: O.C. – TYP. U.N.O.
3. MULTIPLE STUDS WHERE SHOWN ON PLAN OR DETAILS.
4. #10x3/4" LONG TEKS SCREWS EACH SIDE.
5. 2 #10x3/4" LONG TEKS SCREWS.
6. 4 #10x3/4" LONG TEKS SCREWS.
7. 2"x20 GAGE FLAT STRAP BOTH SIDES AT 24" O.C. WITH 1 #10 SCREW AT EACH VERTICAL STUD.

CF2 TYPICAL STEEL STUD WALL – SCREW CONNECTION

NO SCALE

								APP.
								DATE
								REVISIONS
								DATE
								BY
								NO

Registered Professional Engineer
CERTIFICATE NO.
70374
JAMES
APPLEYARD
10/31/25
Date Signed
ARIZONA, U.S.A.

PREPARED BY: PKA
DESIGNED BY: JA
DRAWN BY: NS
CHECKED BY: JA
SCALE: AS NOTED
DATE: SEP 2025
JOB NO. 23364

THESE DRAWINGS ARE THE PROPERTY OF P.A.C.E. AND SHALL NOT BE REPRODUCED IN ANY MANNER NOR BE USED FOR CONSTRUCTION UNLESS STAMPED "ISSUED FOR CONSTRUCTION".

TITLE: TYPICAL DETAILS

JOB: TOWN OF JEROME
WASTEWATER
TREATMENT PLANT
YAVAPAI AZ

ISSUED FOR BID

PREPARED BY:
PACE
Advanced Water Engineering
8723 E. VIA de VENTURA, SUITE A-140, SCOTTSDALE, CA 85258
P: (480) 991-3555 | www.pacewater.com
TAYLOR B. PIERCE R.C.E 70097 DATE

SHEET
S1.6
57 OF 99 SHEETS

JOB NO. 23364

FOR GENERAL PRICING INFORMATION ONLY, COMPLETE DESIGN AND SHOP DRAWINGS TO BE SUPPLIED AND SUBMITTED BY STUD SUPPLIER

PK ASSOCIATES, LLC
6900 E. Belleview Ave. #200
Greenwood Village, Colorado 80111
Phone: (720) 799-1058
Email: cadd@pkastructural.com
Website: www.pkastructural.com

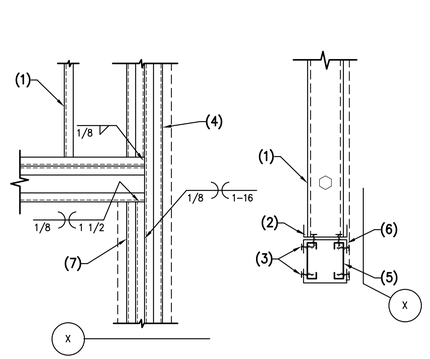

NOTES:

1. STEEL STUD WALL.
2. CONT. 16 GAGE TRACK W/ 2 – #12 TEK SCREWS AT 12" O.C. STAGGERED THROUGH TRACKS TO STUDS BELOW.
3. #12 TEK SCREWS AT 12" O.C., EACH LEG OF TRACK.
4. 2 (FULL HEIGHT) JAMB STUDS MIN. REFER TO SCHEDULE BELOW FOR ADDITIONAL STUDS WHERE REQUIRED.
5. STEEL HEADER PER SCHEDULE.
6. CONT. STEEL TRACK – TOP AND BOTTOM. REFER TO SCHEDULE FOR HEAVIER GAGE WHERE REQUIRED.
7. DOUBLE TRIMMER STUD, 16 GA. MIN. (ADD ONE ADDITIONAL STUDS AT EVERY 4'–0" OPENING. INCREASE AFTER 6'–0" WIDE).
8. TYPICAL PINS OR SCREWS AT 2" O.C. EACH SIDE FOR EVERY STUD IN THE GROUP.
9. TYPICAL CLIP ANGLE, ONE FOR EVERY TWO STUDS.

NOTE:

– FOR OPENING LARGER THAN SHOWN – SEE FRAMING PLAN
– ALL HEADER'S STUDS AND TRACKS SHALL BE UNPUNCHED MEMBERS.

OPENING	EXTERIOR WALLS		INTERIOR WALLS			
	HEADER SIZE (6" WALL)	JAMB STUDS (6" WALL)	HEADER SIZE		JAMB STUDS	
			4" WALL	6" WALL	4" WALL	6" WALL
0" – 4'–0"	2– 6"x20 GA (600S137–33) STUDS AND 2– 6"x18 GA (600T125–43) TRACKS	2– 6"x16 GA (600S200–54)	2– 6"x20 GA (600S137–33) STUDS AND 2– 4"x18 GA (400T125–43) TRACKS	2– 6"x20 GA (600S137–33) STUDS AND 2– 6"x18 GA (600T125–43) TRACKS	2– 4"x20 GA (400S137–33)	2– 6"x20 GA (600S137–33)
4'–1" – 6'–0"	2– 6"x20 GA (600S137–33) STUDS AND 2– 6"x18 GA (600T125–43) TRACKS	2– 6"x16 GA (600S200–54)	2– 6"x20 GA (600S137–33) STUDS AND 2– 4"x18 GA (400T125–43) TRACKS	2– 6"x20 GA (600S137–33) STUDS AND 2– 6"x18 GA (600T125–43) TRACKS	2– 4"x20 GA (400S137–33)	2– 6"x20 GA (600S137–33)
6'–1" – 8'–0"	2– 6"x18 GA (600S162–43) STUDS AND 2– 6"x18 GA (600T125–43) TRACKS	2– 6"x16 GA (600S200–54)	2– 6"x20 GA (600S137–33) STUDS AND 2– 4"x18 GA (400T125–43) TRACKS	2– 6"x20 GA (600S137–33) STUDS AND 2– 6"x18 GA (600T125–43) TRACKS	2– 4"x20 GA (400S137–33)	2– 6"x20 GA (600S137–33)
8'–1" – 10'–0"	2– 6"x16 GA (600S200–54) STUDS AND 2– 6"x18 GA (600T125–43) TRACKS	3– 6"x16 GA (600S200–54)	2– 6"x20 GA (600S137–33) STUDS AND 2– 4"x18 GA (400T125–43) TRACKS	2– 6"x20 GA (600S137–33) STUDS AND 2– 6"x18 GA (600T125–43) TRACKS	2– 4"x20 GA (400S137–33)	2– 6"x20 GA (600S137–33)
10'–1" – 12'–0"	3– 6"x16 GA (600S250–54) STUDS AND 2– 6"x16 GA (600T200–54) TRACKS	3– 6"x16 GA (600S200–54)	3– 6"x20 GA (600S137–33) STUDS AND 2– 4"x16 GA (400T150–54) TRACKS	3– 6"x20 GA (600S137–33) STUDS AND 2– 6"x18 GA (600T125–43) TRACKS	2– 4"x20 GA (400S137–33)	2– 6"x20 GA (600S137–33)
12'–1" – 14'–0"	3– 8"x16 GA (800S250–54) STUDS AND 2– 6"x14 GA (600T200–68) TRACKS	4– 6"x16 GA (600S200–54)	3– 8"x20 GA (800S137–33) STUDS AND 2– 4"x16 GA (400T200–54) TRACKS	3– 8"x20 GA (800S137–33) STUDS AND 2– 6"x18 GA (600T125–43) TRACKS	2– 4"x20 GA (400S137–33)	2– 6"x20 GA (600S137–33)
14'–1" – 16'–0"	3– 8"x14 GA (800S200–68) STUDS AND 3– 6"x14 GA (600T200–68) TRACKS	5– 6"x16 GA (600S200–54)	3– 8"x18 GA (800S137–43) STUDS AND 3– 4"x16 GA (400T200–54) TRACKS	3– 8"x18 GA (800S137–43) STUDS AND 2– 6"x18 GA (600T125–43) TRACKS	2– 4"x20 GA (400S162–33)	2– 6"x20 GA (600S137–33)
CONTINUOUS SPANDREL OPENING	2– 6"x18 GA (600S162–43) STUDS AND 2– 6"x18 GA (600T125–43) TRACKS	N/A USE BRACE PER DETAIL	2– 6"x20 GA (600S137–33) STUDS AND 2– 4"x18 GA (400T125–43) TRACKS	2– 6"x20 GA (600S137–33) STUDS AND 2– 6"x18 GA (600T125–43) TRACKS	N/A USE BRACE PER DETAIL	N/A USE BRACE PER DETAIL
DESIGN HEIGHT IS 16'–0" OR LESS, IF GREATER HEIGHT REQUIRED USE BRACES ACROSS OPENING. VERIFY BRACES ARE ABOVE CEILING LINE.						

CF6 *HEADER IN NON–BEARING STEEL STUD WALL*

NO SCALE

NO	BY	DATE	REVISIONS	DATE	APP.

THESE DRAWINGS ARE THE PROPERTY OF P.A.C.E. AND SHALL NOT BE REPRODUCED IN ANY MANNER NOR BE USED FOR CONSTRUCTION UNLESS STAMPED "ISSUED FOR CONSTRUCTION".

Registered Professional Engineer (Civil) CERTIFICATE NO. 70374 JAMES APPLEYARD 10/31/25 Date Signed ARIZONA, U.S.A.

PREPARED BY: PKA
DESIGNED BY: JA
DRAWN BY: NS
CHECKED BY: JA
SCALE: AS NOTED
DATE: SEP 2025
JOB NO.: 23364

TITLE: **TYPICAL DETAILS**

JOB: TOWN OF JEROME WASTEWATER TREATMENT PLANT
YAVAPAI AZ

ISSUED FOR BID

PREPARED BY:
PACE
Advanced Water Engineering
8723 E. Via de Ventura Suite 260 | SCOTTSDALE, CA 85258
P: (480) 991-3995 | www.paceadvisor.com
TAYLOR B. PIERCE R.C.E 70097 DATE

SHEET
S1.7
58 OF 99 SHEETS

JOB NO. 23364

PK ASSOCIATES, LLC
6900 E. Belleview Ave. #200
Greenwood Village, Colorado 80111
Phone: (720) 799-1058
Email: cadd@pkastructural.com
Website: www.pkastructural.com

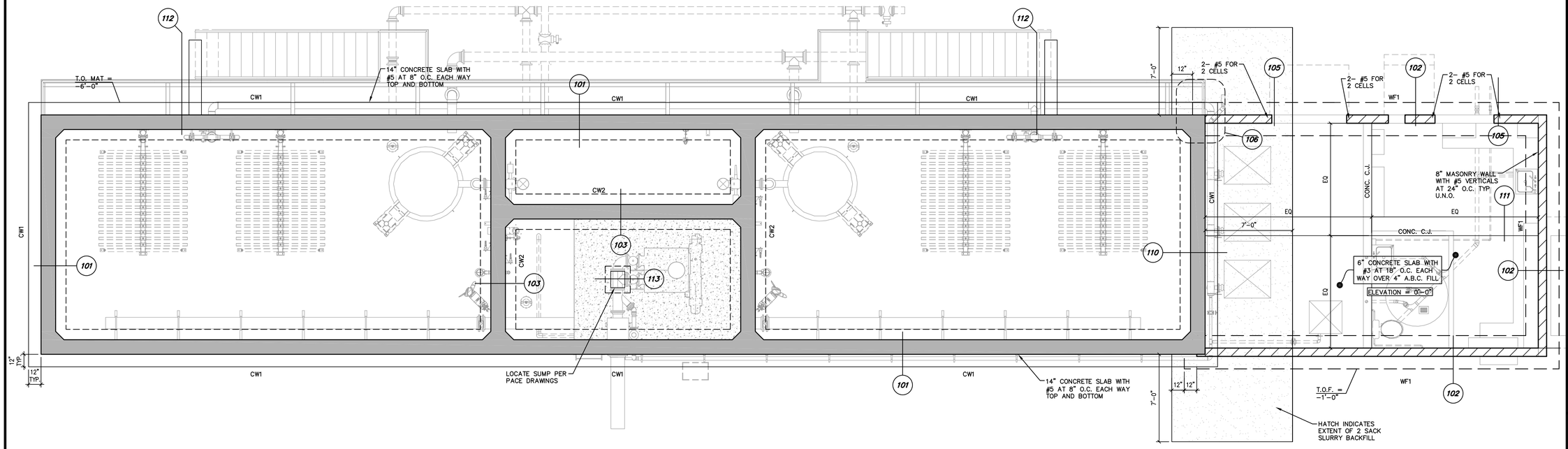

1 FOUNDATION PLAN

SCALE: 1/4"=1'-0"

CONCRETE WALL (CW) SCHEDULE

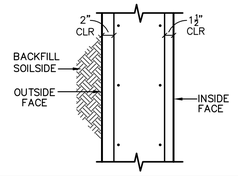

MARK	t	VERTICAL REINF. INSIDE FACE	VERTICAL REINF. OUTSIDE FACE	HORIZONTAL REINF. INSIDE FACE	HORIZONTAL REINF. OUTSIDE FACE	REMARKS
CW1	14"	#9 AT 6" O.C.	#5 AT 8" O.C.	#5 AT 8" O.C.	#5 AT 8" O.C.	TYP. U.N.O.
CW2	14"	#9 AT 6" O.C.	#9 AT 6" O.C.	#5 AT 8" O.C.	#5 AT 8" O.C.	TYP. U.N.O.

*NOTE: AT BOTTOM OF ALL WALLS PROVIDE SPECIAL HORIZONTAL REINFORCING AND U-BARS AT SHOWN IN DETAILS 119 AND 120 -TYPICAL

CONTINUOUS FOOTING (WF) SCHEDULE

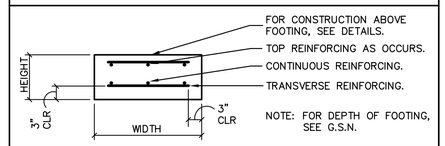

MARK	DIMENSIONS HEIGHT	DIMENSIONS WIDTH	FOOTING REINFORCING	REMARKS
WF1	12"	2'-6"	3- #5 CONTINUOUS	---

ISSUED FOR BID

PREPARED BY: PACE
Advanced Water Engineering
8723 E. Via de Commercio, Suite 1, SCOTTSDALE, CA 85258
P: (480) 991-3595 | www.pacewater.com
TAYLOR B. PIERCE R.C.E 70097 DATE

NO	BY	DATE	REVISIONS	DATE	APP.

Registered Professional Engineer (Civil) CERTIFICATE NO. 70374 JAMES APPLEYARD 10/31/25 Date Signed ARIZONA, U.S.A.

PREPARED BY:	PKA
DESIGNED BY:	JA
DRAWN BY:	NS
CHECKED BY:	JA
SCALE:	AS NOTED
DATE	SEP 2025
JOB NO.	23364

TITLE: FOUNDATION PLAN

JOB: TOWN OF JEROME WASTEWATER TREATMENT PLANT YAVAPAI AZ

SHEET S2.00
59 OF 99 SHEETS

JOB NO. 23364

THESE DRAWINGS ARE THE PROPERTY OF P.A.C.E. AND SHALL NOT BE REPRODUCED IN ANY MANNER NOR BE USED FOR CONSTRUCTION UNLESS STAMPED "ISSUED FOR CONSTRUCTION".

PK ASSOCIATES, LLC
6900 E. Belleview Ave. #200
Greenwood Village, Colorado 80111
Phone: (720) 799-1058
Email: cadd@pkastructural.com
Website: www.pkastructural.com

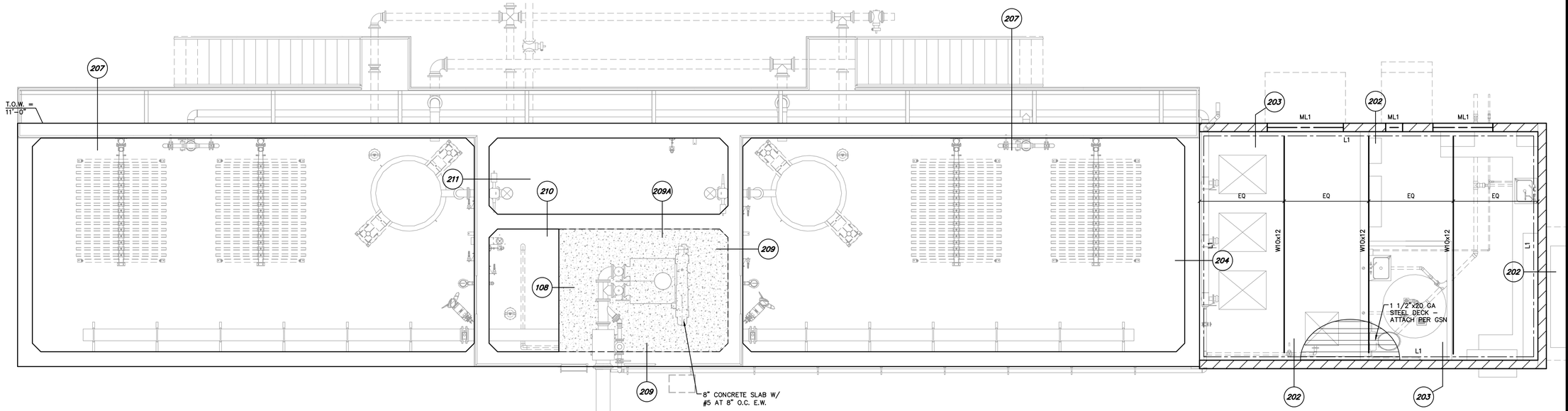

1 FRAMING PLAN

SCALE: 1/4"=1'-0"

LEDGER (L) SCHEDULE

STEEL: 1. ALL LEDGERS SHALL HAVE MINIMUM OF 2 WELD PLATES OR ANCHOR BOLTS AS NOTED BELOW.
2. WELD PLATES OR ANCHOR BOLTS SHALL BE LOCATED NOT LESS THAN 6" NOR MORE THAN 1'-4" FROM END OF LEDGER OR LEDGER SPLICE.

MARK	SIZE / TYPE	CONNECTION
L1	L4x4x1/4"	EMBED PER DETAIL 202 AND 204 AT 48" O.C.

MASONRY LINTEL (ML) SCHEDULE

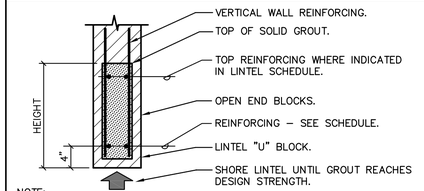

NOTE:
1. VERTICAL REINFORCING TO MATCH AND LAP WALL REINFORCING PER G.S.N.
2. EXTEND GROUT, OPEN END MASONRY UNITS AND REINFORCING 2'-0" PAST EACH JAMB. USE CORNER BARS WHERE 2'-0" CANNOT BE ACHIEVED.

MARK	HEIGHT	REINFORCING	REMARKS
ML1	16"	2- #5 BOTTOM	---

NO	BY	DATE	REVISIONS	DATE	APP.

Registered Professional Engineer (Civil) CERTIFICATE NO. 70374 JAMES APPLEYARD Date Signed 10/31/25 ARIZONA, U.S.A.

PREPARED BY: PKA
DESIGNED BY: JA
DRAWN BY: NS
CHECKED BY: JA
SCALE: AS NOTED
DATE: SEP 2025
JOB NO.: 23364

THESE DRAWINGS ARE THE PROPERTY OF P.A.C.E. AND SHALL NOT BE REPRODUCED IN ANY MANNER NOR BE USED FOR CONSTRUCTION UNLESS STAMPED "ISSUED FOR CONSTRUCTION".

TITLE: FRAMING PLAN

JOB: TOWN OF JEROME WASTEWATER TREATMENT PLANT — YAVAPAI AZ

ISSUED FOR BID

PREPARED BY: PACE Advanced Water Engineering
8723 E. VIA de VENTURA, STE. 290 | SCOTTSDALE, CA 85258
P: (480) 991-3595 | www.paceadvisor.com
TAYLOR B. PIERCE R.C.E 70097 DATE

SHEET S2.01
60 OF 99 SHEETS

JOB NO. 23364

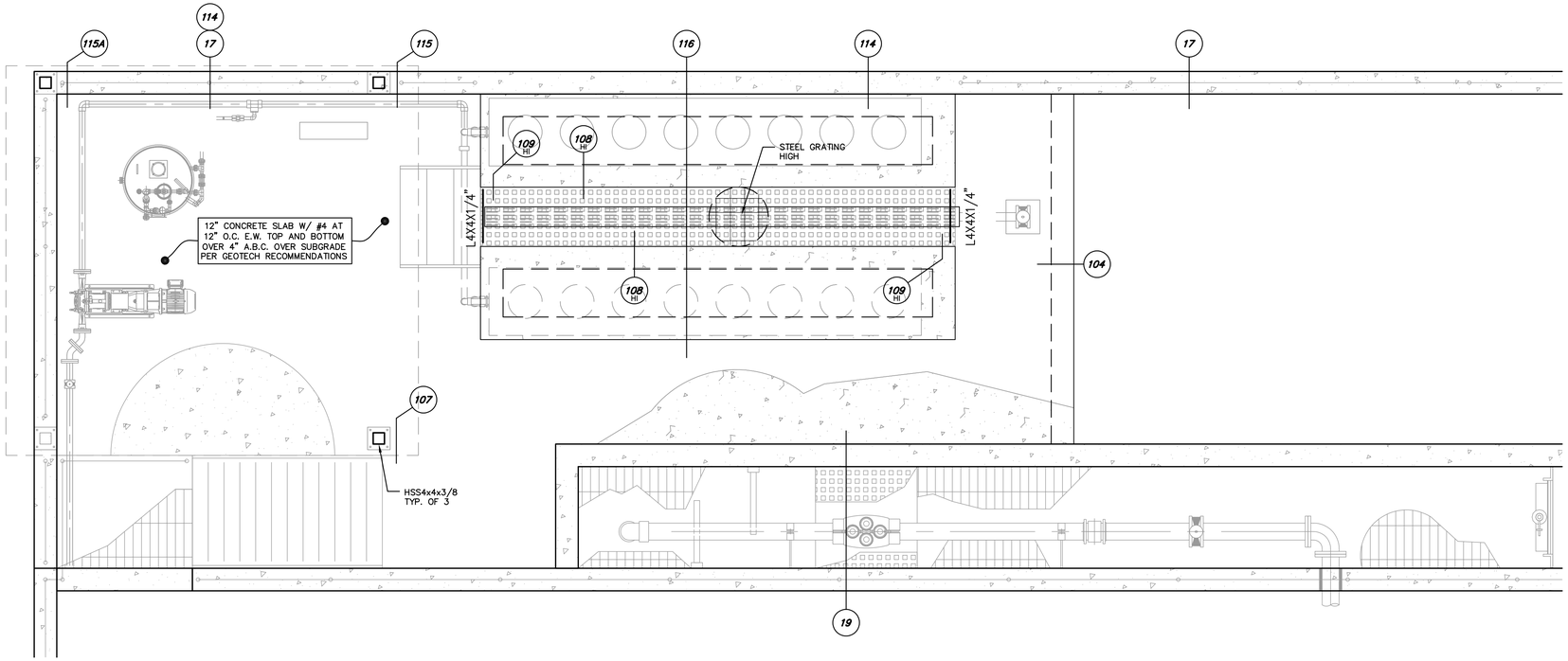

1 PLAN - DEWATERING PAD

SCALE: 1/2"=1'-0"

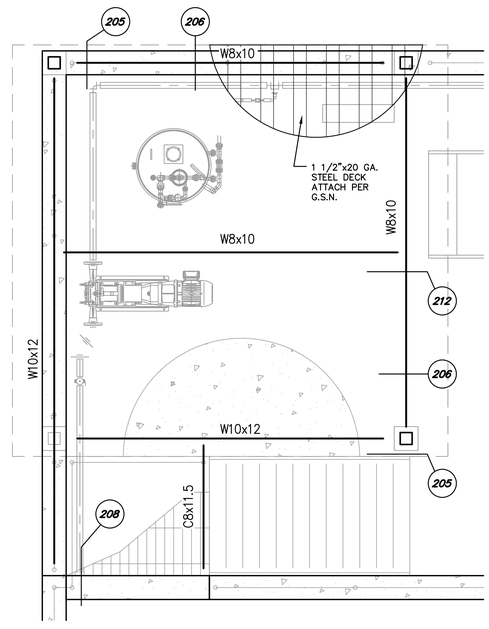

2 SHADE STRUCTURE - FRAMING PLAN

SCALE: 1/2"=1'-0"

PK ASSOCIATES, LLC
6900 E. Belleview Ave. #200
Greenwood Village, Colorado 80111
Phone: (720) 799-1058
Email: cadd@pkastructural.com
Website: www.pkastructural.com

NO	BY	DATE	REVISIONS	DATE	APP.

Registered Professional Engineer (AZ)
CERTIFICATE NO.
70374
JAMES
APPLEYARD
Date Signed 10/31/25
ARIZONA, U.S.A.

PREPARED BY: PKA
DESIGNED BY: JA
DRAWN BY: NS
CHECKED BY: JA
SCALE: AS NOTED
DATE: SEP 2025
JOB NO. 23364

THESE DRAWINGS ARE THE PROPERTY OF P.A.C.E. AND SHALL NOT BE REPRODUCED IN ANY MANNER NOR BE USED FOR CONSTRUCTION UNLESS STAMPED 'ISSUED FOR CONSTRUCTION'.

TITLE
FRAMING PLAN

JOB
TOWN OF JEROME
WASTEWATER
TREATMENT PLANT
YAVAPAI AZ

ISSUED FOR BID

PREPARED BY:
PACE
Advanced Water Engineering
8723 E. VIA DE COMERCIO, STE A, SCOTTSDALE, CA 85258
P: (408) 991-3595 | W: www.pacewater.com
TAYLOR B. PIERCE R.C.E 70097 DATE

SHEET
S2.10
61 OF 99 SHEETS

JOB NO. 23364

NOTES:

1. CONCRETE SLAB/WALL.
2. CONT. L2x2x1/4" W/ 1/2"ø H.S. AT AT 18" O.C.
3. GRATING AND ATTACHMENT BY OTHERS.

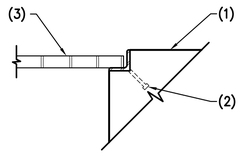

108 GRATING AT CONCRETE SLAB/WALL

NO SCALE

NOTES:

1. MASONRY WALL BEYOND.
2. CONCRETE SLAB WHERE OCCURS.
3. FINISHED GRADE.
4. SOLID GROUTED MASONRY STEM WALL AND CONCRETE FOOTING WITH REINFORCING CONTINUOUS FROM BEYOND.
5. CONCRETE SLAB ON GRADE, TOOLED EDGE AT OPENING.
6. DEPRESS STEM WALL 8" MIN.
7. VARIES – SEE PLANS FOR SIZE AND REINF.

NOTE:

– AT CONTRACTOR'S OPTION, USE CONCRETE STEM WALL W/ SAME REINFORCING.

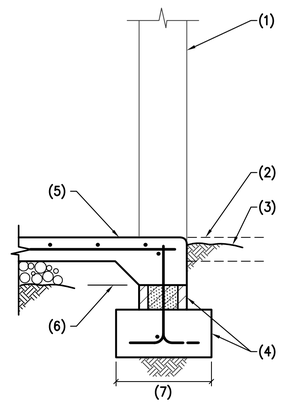

105 EXTERIOR MASONRY WALL FOOTING AT OPENING

NO SCALE

NOTES:

1. CONCRETE WALL.
2. CONCRETE FOOTING MAT SLAB
3. DOWELS TO MATCH AND LAP VERTICAL WALL REINFORCING.
4 CONCRETE SLAB OR FINISHED GRADE AS OCCURS.
5. CONTINUOUS KEYED JOINT.
6. 6" WATER STOP.
7. #5 BAR CONT. AT HOOK.
8. MIRA DRAIN BY CARLISE COATING AND WATERPROOFING, INC. OR APPROVED EQUAL.

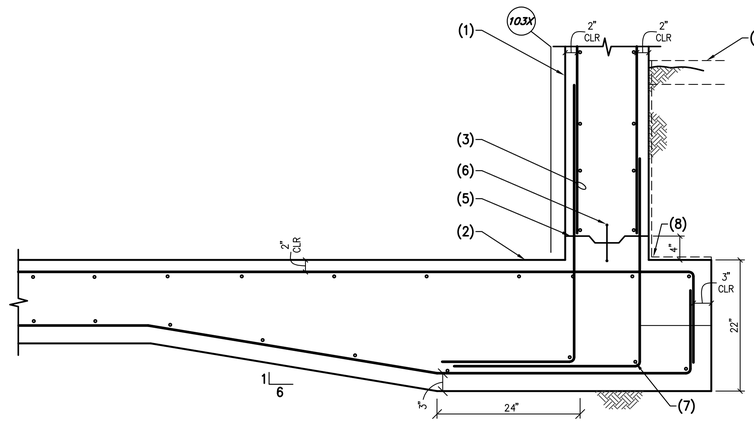

101 CONCRETE WALL AT EDGE OF MAT FOUNDATION

NO SCALE

NOTES:

1. CONCRETE WALL.
2. CONCRETE FOOTING.
3. FOOTING REINFORCING.
4. DOWELS TO MATCH AND LAP FOOTING REINFORCING.
5. 90° HOOK.

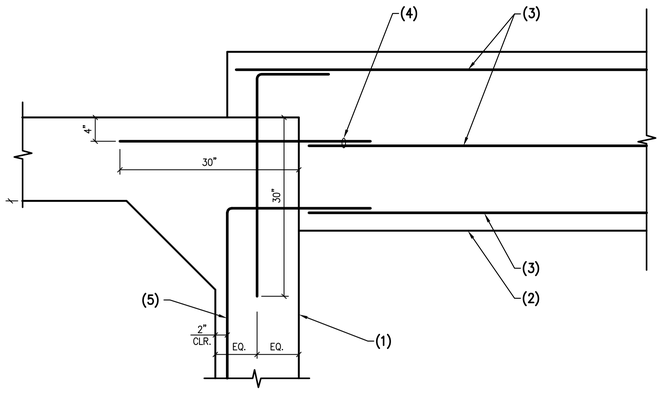

106 PLAN – CONCRETE FOOTING AT CONCRETE WALL

NO SCALE

NOTES:

1. STEEL ANGLE.
2. 1/4" STEEL PLATE.
3. GRATING AND ATTACHMENT BY OTHERS.

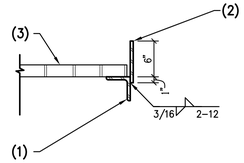

104 GRATING AT STEEL ANGLE

NO SCALE

NOTES:

1. 1 #4 CONTINUOUS.
2. FINISHED GRADE OR CONCRETE SLAB WHERE OCCURS.
3. CONCRETE FOOTING.
4. MASONRY WALL – GROUT SOLID BELOW GRADE.
5. DOWELS TO MATCH AND LAP VERTICAL WALL REINFORCING PER G.S.N. – ALTERNATE BENDS.
6. CONCRETE SLAB.
7. GRADE VARIES AS REQ'D. SOLID GROUT WALL BELOW GRADE.

NOTE:

AT CONTRACTOR'S OPTION, USE CONCRETE STEM WALL W/ SAME REINFORCING.

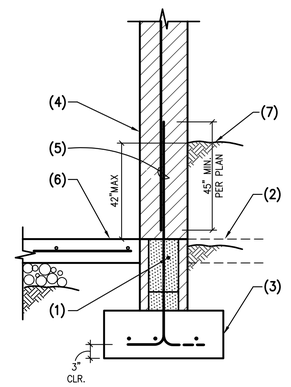

102 EXTERIOR MASONRY WALL FOOTING

NO SCALE

NOTES:

1. CONCRETE SLAB/WALL.
2. CONT. L2x2x1/4" STEEL ANGLE W/ 1/2"ø H.S. AT 4" O.C. AT STEEL ANGLE.
3. 1/2"x6"x6" STEEL PLATE W/ 2– 1/2"ø H.S. AT 4" O.C.
4. STEEL ANGLE.
5. GRATING AND ATTACHMENT BY OTHERS.

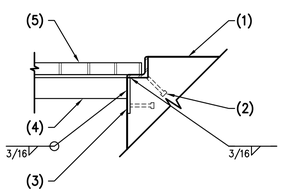

109 STEEL ANGLE AT CONCRETE WALL/SLAB

NO SCALE

NOTES:

1. STEEL COLUMN.
2. 1/2"x10"x10" STEEL PLATE W/ 4– 3/4"ø F1554 GR36 A.B. AT 7" O.C.
3. ±1 1/2" DRYPACK.
4. CONCRETE SLAB.

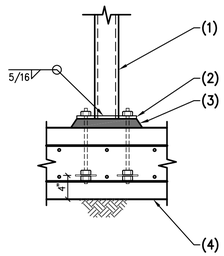

107 STEEL COLUMN AT CONCRETE SLAB

NO SCALE

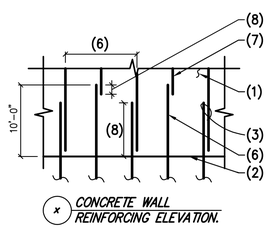

(x) CONCRETE WALL REINFORCING ELEVATION.

NOTES:

1. CONCRETE WALL.
2. CONCRETE FOOTING.
3. DOWELS TO MATCH AND LAP VERTICAL WALL REINFORCING.
4 #5 BAR CONTINUOUS AT HOOK.
5. CONTINUOUS KEYED JOINT.
6. DOWEL TO MATCH SCHEDULED WALL REINFORCING.
7. EVER OTHER VERTICAL BAR MAY LAP W/ A #5.
8. CLASS "B" TENSION LAP.

103 CONCRETE WALL AT MAT FOUNDATION

NO SCALE

ISSUED FOR BID

PREPARED BY:

PACE
Advanced Water Engineering
8723 E. VIA de VENTURA, SUITE 200 | SCOTTSDALE, CA 85258
P: (480) 991-3995 | www.paceadvisor.com

TAYLOR B. PIERCE R.C.E 70097 DATE

SHEET
S3.1
62 OF 99 SHEETS

JOB NO. 23364

TITLE
FOUNDATION DETAILS

JOB
TOWN OF JEROME
WASTEWATER
TREATMENT PLANT
YAVAPAI AZ

NO	BY	DATE	REVISIONS	DATE	APP.

PREPARED BY: PKA
DESIGNED BY: JA
DRAWN BY: NS
CHECKED BY: JA
SCALE: AS NOTED
DATE: SEP 2025
JOB NO. 23364

Registered Professional Engineer
CERTIFICATE NO.
70374
JAMES APPLEYARD
10/31/25
Date Signed
ARIZONA, U.S.A.

PK ASSOCIATES, LLC
6900 E. Belleview Ave. #200
Greenwood Village, Colorado 80111
Phone: (720) 799-1058
Email: cadd@pkastructural.com
Website: www.pkastructural.com

THESE DRAWINGS ARE THE PROPERTY OF P.A.C.E. AND SHALL NOT BE REPRODUCED IN ANY MANNER NOR BE USED FOR CONSTRUCTION UNLESS STAMPED "ISSUED FOR CONSTRUCTION".

NOTES:
1. CONCRETE SLAB.
2. ALUMINUM GRATING.
3. 6" CONCRETE WALL/ SLAB W/ #4 AT 6"O.C. E.W.
4. WATERSTOP PER PACE DRAWINGS.
5. L3x3x1/4 W/ 1/2"ø HILTI SS KWIK BOLT T2 SCREW ANCHOR, OR APPROVED EQUAL. 2 ANCHORS EACH SIDE AT 9" O.C.

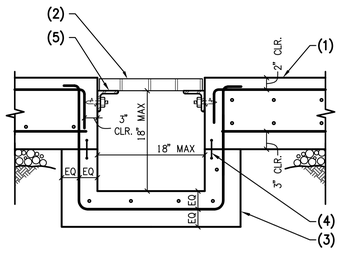

113 *SUMP PIT AT CONCRETE SLAB*

NO SCALE

NOTES:
1. CONCRETE WALL.
2. CONCRETE SLAB.
3. #5x30"x12" AT 12" O.C.
4. CONT. #5 AT BEND.

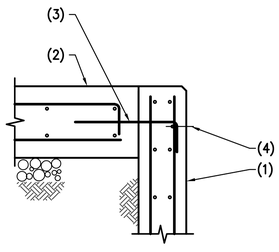

114 *CONCRETE SLAB AT CONCRETE WALL*

NO SCALE

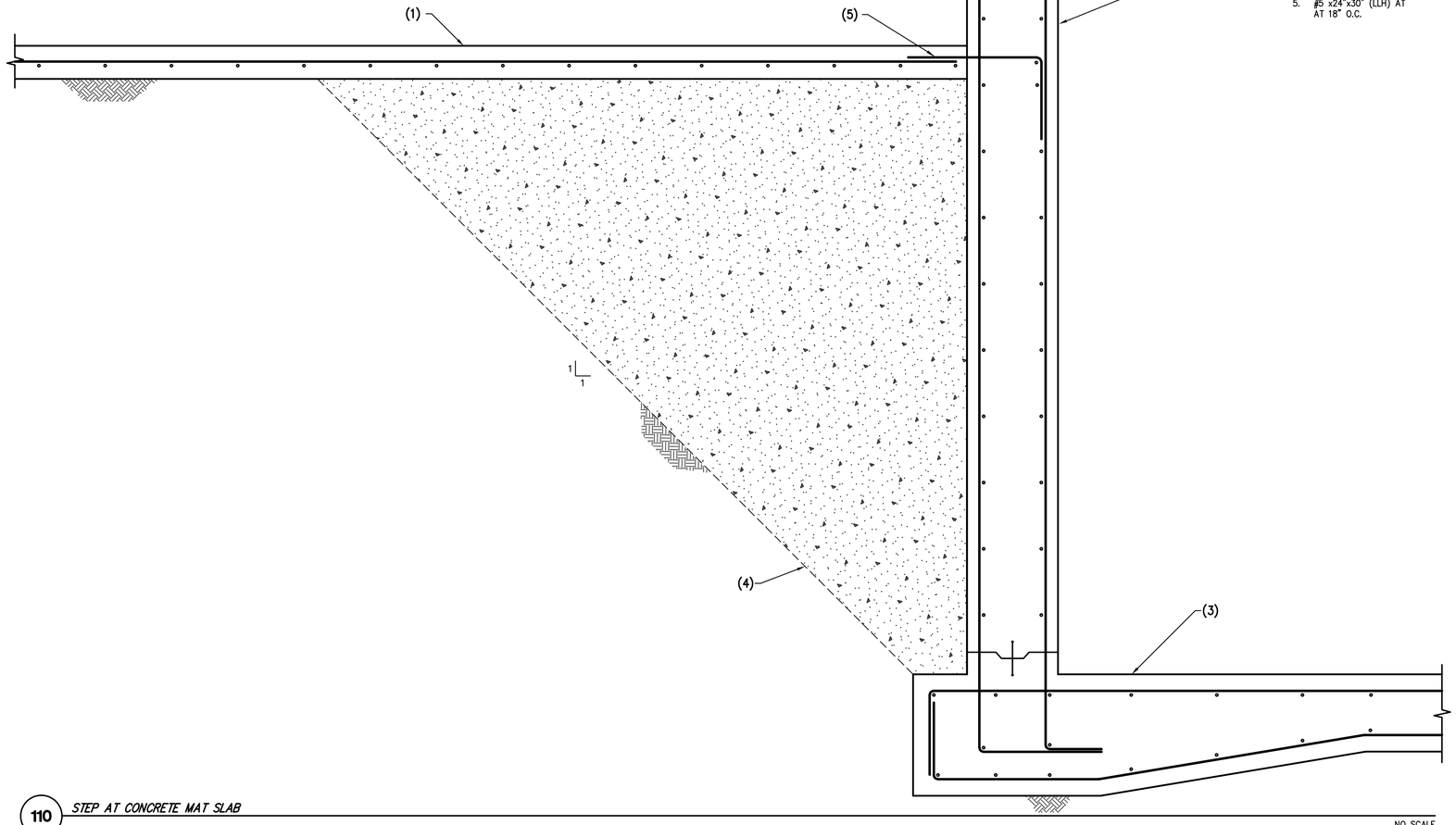

110 *STEP AT CONCRETE MAT SLAB*

NO SCALE

NOTES:
1. CONCRETE SLAB.
2. CONCRETE WALL.
3. CONCRETE MAT SLAB.
4. LEAN CONCRETE INFILL.
5. #5 x24"x30" (LLH) AT AT 18" O.C.

NOTES:
1. CONCRETE WALL.
2. CONCRETE SLAB.
3. #5x30"x12" AT 12" O.C.
4. CONT. #5 AT BEND.
5. STEEL POST.
6. 1/2"x12"x6" STEEL PLATE W/ 2– #5x30" A706 WELDABLE REBAR AT 9" O.C. AND 3/4"ø H.S. CENTERED.
7. 1/2" STEEL PLATE.
8. 2– #5x30" A706 WELDABLE REBAR.
9. 3/4"ø H.S.

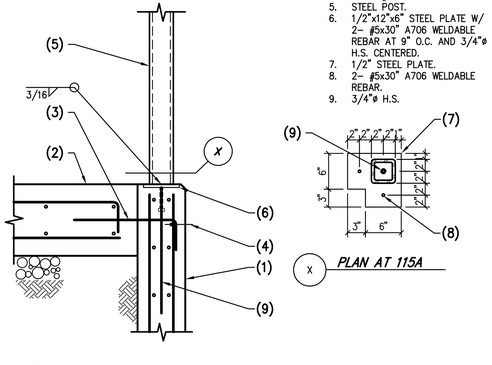

115 *CONCRETE SLAB AT CONCRETE WALL*

115A *AS NOTED*

NO SCALE

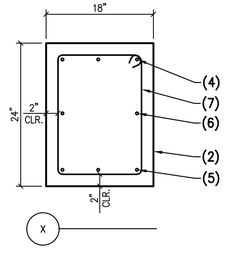

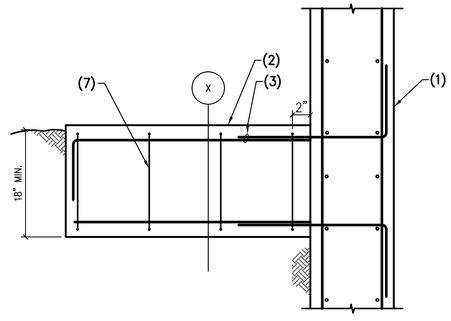

112 *STAIR FOOTING AT CONCRETE WALL*

NO SCALE

NOTES:
1. CONCRETE WALL.
2. STAIR CONCRETE FOOTING.
3. DOWELS TO MATCH AND LAP FOOTING REINFORCING.
4. 4– #6 TOP.
5. 3– #5 BOTTOM.
6. #5 EACH FACE.
7. #4 AT 12" O.C.

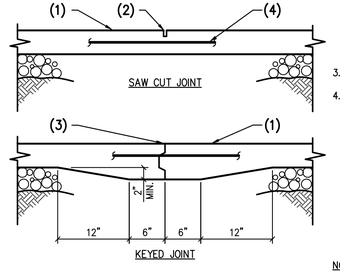

NOTES:
1. CONCRETE SLAB ON GRADE.
2. SAWCUT – 1/8" WIDE x 1/4 SLAB THICKNESS IN DEPTH – CUT SHALL BE MADE SOON ENOUGH TO PREVENT SHRINKAGE CRACKING, BUT NOT SO SOON AS TO CAUSE SPALLING OF THE CONCRETE WHILE SAWING. WORK MUST BE ACCOMPLISHED WITHIN 24 HOURS OF CONCRETE PLACEMENT.
3. CONTINUOUS KEY – SEE TYPICAL KEY IN CONCRETE DETAIL.
4. CUT 1/2" REINFORCEMENT ACROSS C.J. DO NOT CUT AT RAMP.

NOTE:
KEYED JOINTS NEED ONLY OCCUR AT EXPOSED EDGES DURING PLACEMENT UNLESS SPECIFICALLY NOTED ON THE PLANS. "TOOL WET JOINT", "ZIP STRIP", ETC. SHALL MATCH SAWCUT REQUIREMENTS.

111 *CONTROL JOINTS IN CONCRETE SLAB ON GRADE*

NO SCALE

PK ASSOCIATES, LLC
6900 E. Belleview Ave. #200
Greenwood Village, Colorado 80111
Phone: (720) 799-1058
Email: cadd@pkastructural.com
Website: www.pkastructural.com

NO	BY	DATE	REVISIONS	DATE	APP.

Registered Professional Engineer (Civil) CERTIFICATE NO. 70374 JAMES APPLEYARD Date Signed 10/31/25 ARIZONA, U.S.A.

PREPARED BY: PKA
DESIGNED BY: JA
DRAWN BY: NS
CHECKED BY: JA
SCALE: AS NOTED
DATE: SEP 2025
JOB NO.: 23364

THESE DRAWINGS ARE THE PROPERTY OF P.A.C.E. AND SHALL NOT BE REPRODUCED IN ANY MANNER NOR BE USED FOR CONSTRUCTION UNLESS STAMPED "ISSUED FOR CONSTRUCTION".

TITLE: **FOUNDATION DETAILS**

JOB: TOWN OF JEROME
WASTEWATER
TREATMENT PLANT
YAVAPAI AZ

ISSUED FOR BID

PREPARED BY:

PACE
Advanced Water Engineering
8723 E. VIA DE COMMERCIO, 3RD FLOOR, SCOTTSDALE, CA 85258
P: (480) 991-3595 | W: www.pacewater.com

TAYLOR B. PIERCE R.C.E. 70097 DATE

SHEET **S3.2**
63 OF 99 SHEETS

JOB NO. 23364

PK ASSOCIATES, LLC
6900 E. Belleview Ave. #200
Greenwood Village, Colorado 80111
Phone: (720) 799-1058
Email: cadd@pkastructural.com
Website: www.pkastructural.com

NOTES:

1. CONCRETE SLAB.
2. 8" CONCRETE WALL/SLAB W/ #5 AT 12" O.C. EACH WAY.
3. HIGH DENSITY FOAM.
4. GRATING AND ATTACHMENT PER SHEET M5.3.
5. DOWELS TO MATCH AND LAP WALL REINFORCING.
6. 2 CONT. #4.
7. #4x60" AT 12" O.C.
8. EQUIPMENT AND ATTACHMENT BY OTHERS.
9. CONCRETE WALL.

116 SECTION – DEWATERING PLAN

NO SCALE

NO	BY	DATE	REVISIONS	DATE	APP.

Registered Professional Engineer (Civil)
CERTIFICATE NO.
70374
JAMES APPLEYARD
Date Signed 10/31/25
ARIZONA, U.S.A.

PREPARED BY: PKA
DESIGNED BY: JA
DRAWN BY: NS
CHECKED BY: JA
DATE: SEP 2025
SCALE: AS NOTED
JOB NO.: 23364

TITLE: **FOUNDATION DETAILS**

JOB: TOWN OF JEROME
WASTEWATER
TREATMENT PLANT
YAVAPAI AZ

ISSUED FOR BID

PREPARED BY:
PACE
Advanced Water Engineering
8723 E. VIA DE COMERCIO, STE A-104, SCOTTSDALE, CA 85258
P.: (480) 991-3595 | www.pacewater.com
TAYLOR B. PIERCE R.C.E 70097 DATE

SHEET
S3.3
64 OF 99 SHEETS

JOB NO. 23364

THESE DRAWINGS ARE THE PROPERTY OF P.A.C.E. AND SHALL NOT BE REPRODUCED IN ANY MANNER NOR BE USED FOR CONSTRUCTION UNLESS STAMPED "ISSUED FOR CONSTRUCTION".

PK ASSOCIATES, LLC
6900 E. Belleview Ave. #200
Greenwood Village, Colorado 80111
Phone: (720) 799-1058
Email: cadd@pkastructural.com
Website: www.pkastructural.com

NOTES:
1. CONCRETE WALL.
2. CONCRETE SLAB.
3. #5x 36" ⌐ 36" AT SPACING TO MATCH SLAB REINFORCING.
4. CONT. BAR AT HOOK.
5. GRATING AT 209A PER DETAIL 108.

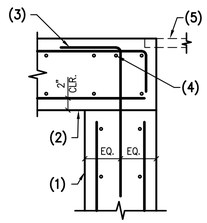

209 CONCRETE WALL AT CONCRETE WALL
209A AS NOTED
NO SCALE

NOTES:
1. STEEL BEAM.
2. STEEL DECK – SEE PLANS FOR DIRECTION.
3. 1/4" CONTINUOUS BENT PLATE.

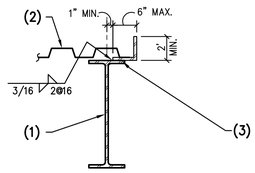

206 STEEL ROOF DECK AT STEEL BEAM
NO SCALE

NOTES:
1. CONCRETE WALL.
2. 1/2"x8"x4" STEEL PLATE W/ 2– 1/2"ø H.S. AT 5" O.C.
3. CONTINUOUS LEDGER ANGLE.
4. STEEL DECK.

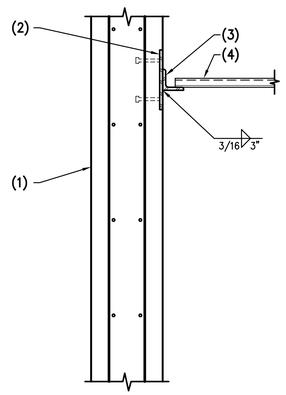

204 LEDGER ANGLE AND STEEL DECK AT CONCRETE WALL
NO SCALE

NOTES:
1. STEEL LEDGER ANGLE – FOR SIZE AND LOCATION, SEE PLAN.
2. STEEL PLATE 1/2"x3"x12" LONG.
3. STEEL PLATE 1/2"x3".

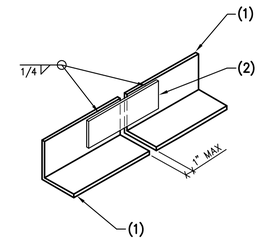

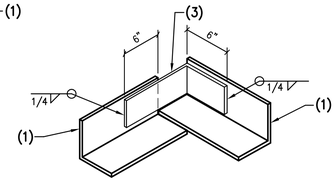

AT CORNERS

201 TYPICAL SPLICE IN CONTINUOUS STEEL LEDGER ANGLE
NO SCALE

NOTES:
1. CONCRETE WALL.
2. CONT. L2x2x1/4" W/ 1/2"ø H.S. AT 18" O.C.
3. GRATING AND ATTACHMENT BY OTHERS.

210 STEEL GRATING AT CONCRETE WALL
NO SCALE

NOTES:
1. CONCRETE WALL.
2. C6x8.2 AT 4'–0" O.C. MAX.
3. CONT. L4x4x1/4.
4. CONT. L2x2x1/4" W/ 1/2"ø H.S. AT 18" O.C.
5. GRATING AND ATTACHMENT BY OTHERS.
6. COPE TOP FLANGE.
7. 1/2"x8"x8" STEEL PLATE W/ 2– 3/4"ø H.S. AT 5" O.C.
8. 3– 3/4"ø H.S. AT 4" O.C. CENTERED ON CHANNEL.
9. HANDRAIL POST AND ATTACHMENT BY OTHERS. (4'–0" O.C. MAX).
10. 1/2"x8"x4" STEEL PLATE W/ 2– 3/4"ø H.S. AT 5" O.C.

207 WALKWAY AT CONCRETE WALL
NO SCALE

NOTES:
1. HSS SQUARE OR RECTANGULAR COLUMN.
2. STEEL BEAM.
3. STEEL SHEAR PLATE. SEE TYP. BOLT SCHEDULE.
4. FOR SIZE, TYPE, AND NUMBER OF BOLTS, REFER TO TYP. BOLT SCHEDULE.
5. 1/2" STEEL CAP PLATE.
6. AT t ≤ 1/4" USE FILLET WELD SIZE TO MATCH "t". AT t > 1/4" USE 5/16" FILLET.
7. 1/2" STEEL BACKER PLATE x BEAM DEPTH x WIDTH OF COLUMN LESS 1".
8. TOP OF COLUMN AS OCCURS.
9. DEPTH TO MATCH JOIST SHOE.
10. BEAM BOTH SIDES WHERE OCCURS.

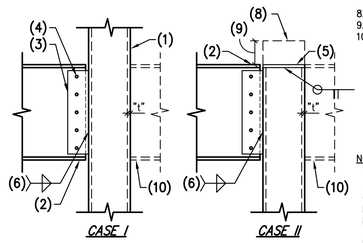

NOTES:
–DETAIL A MAY BE USED TYP. U.N.O.
–DETAIL B MAY BE USED AT CONTRACTOR'S OPTION WHERE HSS MIN. FLANGE THICKNESSES ARE MET PER SCHEDULE.
–WHERE COLUMNS ARE RECTANGULAR IN LIEU OF SQUARE, THE GREATER FLANGE LENGTH (I.E. WORST CASE) APPLIES PER SCHEDULE.
–CONTRACTOR MAY INCREASE PLAN COLUMN THICKNESS AT THEIR OPTION.

B SHEAR PLATE TO COLUMN

MINIMUM COLUMN FLANGE THICKNESS FOR DETAIL B	
HSS MEMBER	THICKNESS ("t")
4x4	1/4"
5x5	1/4"
6x6	1/4"
7x7	1/4"
8x8	5/16"
9x9	5/16"
10x10	3/8"
12x12	3/8"
14x14	1/2"
16x16	1/2"

NOTES:
1. MASONRY WALL.
2. CONTINUOUS GROUTED BOND BEAM PER G.S.N.
3. CONTINUOUS LEDGER ANGLE.
4. STEEL DECK – FOR DIRECTION, SEE PLAN.
5. 1/2"x8"x4" STEEL PLATE W/ 2– 1/2"ø H.S. AT 5" O.C.

202 LEDGER ANGLE AND STEEL DECK AT MASONRY WALL
NO SCALE

NOTES:
1. CONCRETE WALL.
2. CONT. L2x2x1/4" W/ 1/2"ø H.S. AT 18" O.C.
3. GRATING AND ATTACHMENT BY OTHERS.
4. 1/2"x8"x4" STEEL PLATE W/ 2– 3/4"ø H.S. AT 5" O.C.
5. HANDRAIL POST AND ATTACHMENT BY OTHERS. (4'–0" O.C. MAX).

211 EDGE OF GRATING AT CONCRETE WALL
NO SCALE

NOTES:
1. STEEL BEAM.
2. CONCRETE WALL.
3. 3/8" STEEL SHEAR TAB.
4. 2– 1"ø BOLTS.
5. 1/2"x6"x14" STEEL PLATE W/ 3– 3/4"ø H.S. AT 5" O.C.

208 STEEL BEAM AT CONCRETE WALL
NO SCALE

A SHEAR PLATE TO BACKER PLATE TO COLUMN

205 TYPICAL BEAM TO HSS STEEL COLUMN
NO SCALE

NOTES:
1. MASONRY WALL.
2. CONTINUOUS 8" DEEP GROUTED BOND BEAM.
3. SOLID GROUT 6" ALL AROUND ALL ANCHORS.
4. STEEL PLATE PER SCHEDULE BELOW.
5. STEEL BEAM.
6. 3/8" STEEL PLATE.
7. 1 1/2" SLOTTED HOLES.
8. FOR SIZE, TYPE, AND NUMBER OF BOLTS SEE TYPICAL BOLT SCHEDULE.

EMBED PLATE SCHEDULE	
W8,W10	A. 3/8"x4"x12" WITH 2– 3/4"ø H.S. AT 9" O.C.
W12,W14	B. 1/2"x8"x14" WITH 4– 3/4"ø H.S. AT 5"x11" O.C.
W16,W18	C. 5/8"x11"x19" WITH 6– 3/4"ø H.S. AT 8" O.C.
W21,W24	D. 3/4"x11"x27" WITH 8– 3/4"ø H.S. AT 8" O.C.

203 STEEL BEAM TO MASONRY WALL CONNECTION
NO SCALE

NO	BY	DATE	REVISIONS	DATE	APP.

Registered Professional Engineer (Civil) CERTIFICATE NO. 70374 JAMES APPLEYARD Date Signed 10/31/25 ARIZONA, U.S.A.

PREPARED BY: PKA
DESIGNED BY: JA
DRAWN BY: NS
CHECKED BY: JA
SCALE: AS NOTED
DATE: SEP 2025
JOB NO.: 23364

THESE DRAWINGS ARE THE PROPERTY OF P.A.C.E. AND SHALL NOT BE REPRODUCED IN ANY MANNER NOR BE USED FOR CONSTRUCTION UNLESS STAMPED "ISSUED FOR CONSTRUCTION".

TITLE: FRAMING DETAILS

JOB: TOWN OF JEROME WASTEWATER TREATMENT PLANT YAVAPAI AZ

ISSUED FOR BID

PREPARED BY:
PACE
Advanced Water Engineering
8723 E. Via de Ventura, Suite J | SCOTTSDALE, CA 85258
P: (480) 991-3995 | www.paceadvisor.com
TAYLOR B. PIERCE R.C.E 70097 DATE

SHEET
S4.1
65 OF 99 SHEETS

JOB NO. 23364

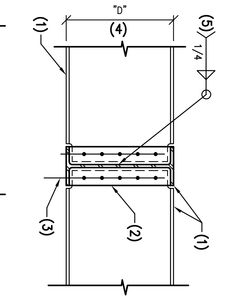

MOTES:

1. STEEL BEAM.
2. USE 3/8" STEEL SHEAR PLATE WHERE "D" = 27" OR GREATER.
3. FOR SIZE, TYPE & NUMBER OF BOLTS, SEE TYPICAL BOLT SCHEDULE. OF BEAM "D" = LESSER OF BEAM DEPTHS AS OCCURS.
4. WELD AS SHOWN ON TYPICAL WELD SCHEDULE. AT CONNECTION AT STIFFENER PLATES WHEN REQUIRED.
5.

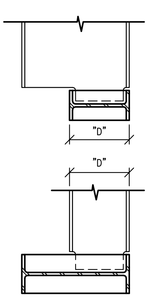

NOTE:
AT ONE SIDED CONNECTIONS, INSTALL 3/8" STIFFENER PLATE OPPOSITE SHEAR PLATE.

212 TYPICAL CONNECTION WIDE FLANGE BEAM TO BEAM

NO SCALE

PK ASSOCIATES, LLC
6900 E. Belleview Ave. #200
Greenwood Village, Colorado 80111
Phone: (720) 493-0000
Email: cadd@pkastructural.com
Website: www.pkastructural.com

ISSUED FOR BID

JOB NO. 23364

SHEET S4.2

66 OF 99 SHEETS

PREPARED BY:

PACE
Advanced Water Engineering
8723 E. VIA de COMMERICO, SUITE A-204 | SCOTTSDALE, CA 85258
P: (408) 991-3595 | www.pacewater.com

TAYLOR B. PIERCE R.C.E 70097 DATE

JOB

TOWN OF JEROME
WASTEWATER
TREATMENT PLANT

YAVAPAI AZ

TITLE

FRAMING DETAILS

PREPARED BY:	PKA
DESIGNED BY:	JA
DRAWN BY:	NS
CHECKED BY:	JA
SCALE	AS NOTED
DATE	SEP 2025
JOB NO.	23364

Registered Professional Engineer
CERTIFICATE NO. 70097
JAMES APPLEYARD
STATE OF ARIZONA
NATIONAL COUNCIL OF EXAMINERS FOR ENGINEERING AND SURVEYING (NCEES)

NO	BY	DATE	REVISIONS	DATE	APP.

THESE DRAWINGS ARE THE PROPERTY OF P.A.C.E. AND SHALL NOT BE REPRODUCED IN ANY MANNER NOR BE USED FOR CONSTRUCTION UNLESS STAMPED "ISSUED FOR CONSTRUCTION".

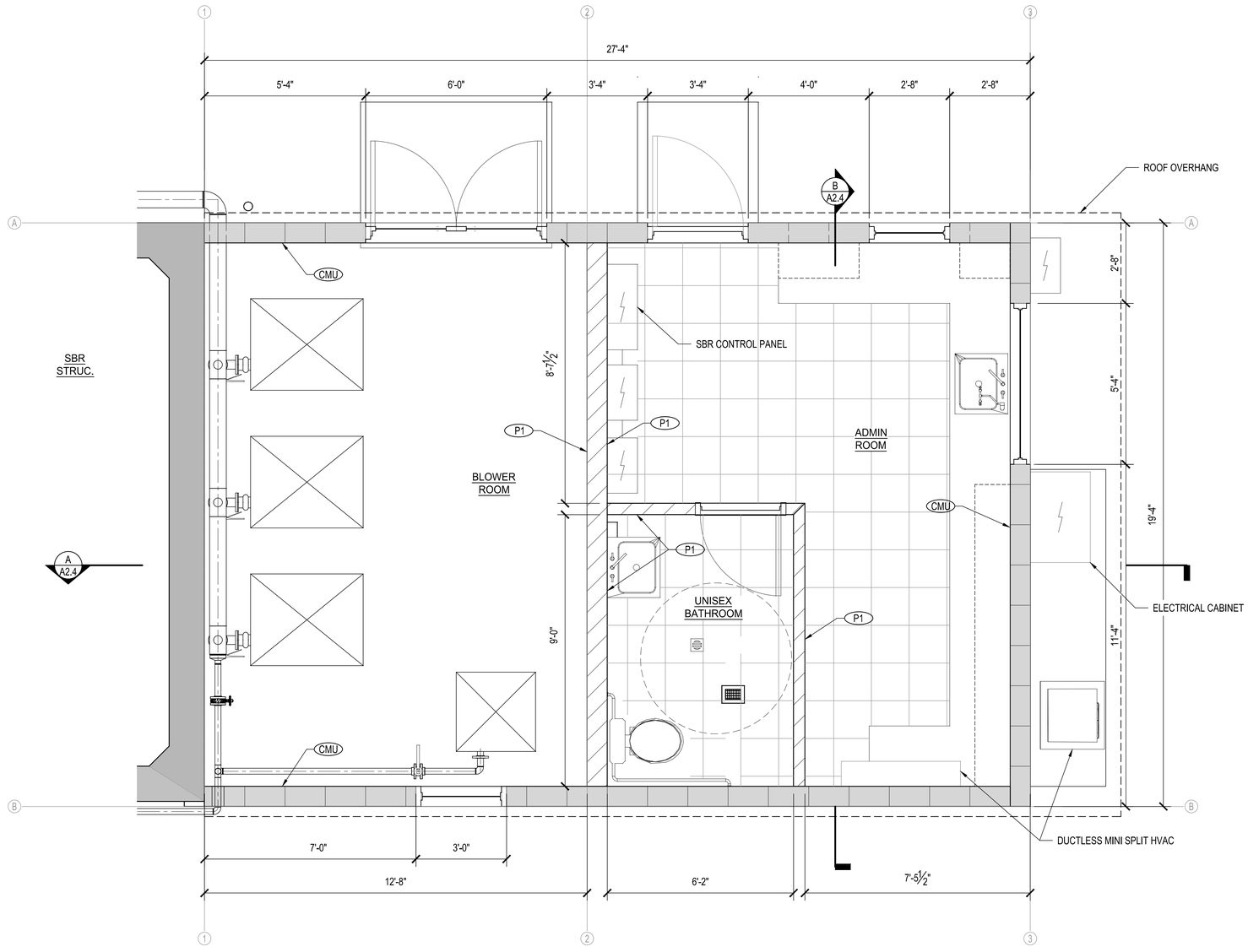

ARCH. PLAN
SCALE: 1/2" = 1'-0"

NORTH

GENERAL NOTES

1. ALL INTERIOR WALLS, EXTERIOR WALLS, AND CEILINGS SHALL BE INSULATED PER SPECIFICATION SECTION 07 2100 OF THE CONTRACT DOCUMENTS.

DOOR & WINDOW NOTES:

1. ALL EXITS SHALL OPEN FROM THE INSIDE WITHOUT THE USE OF A KEY AND/OR SPECIAL KNOWLEDGE (U.N.O.). MANUALLY OPERATED EDGE OR SURFACE MOUNTED FLUSH BOLTS AND SURFACE BOLTS ARE PROHIBITED.
2. PAINT STEEL DOORS AND FRAMES WITH ONE (1) COAT OF RUST INHIBITING PRIMER AND ONE (1) COAT OF SEMI-GLOSS ALKYD ENAMEL.
3. ALL INTERIOR DOORS TO BE SOLID CORE MASONITE DOOS IN "TIMELY" FRAMES (U.N.O.).
4. ALL DOOR HARDWARE TO BE AL SERIES "SCHLAGE" LEVER TYPE WITH FINISH PER OWNER'S DIRECTION. VERIFY KEYING WITH OWNER.
5. PROVIDE DOOR STOPS AS REQUIRED AT FLOOR AND/OR WALL.
6. ALL DOORS TO BE MASTER KEYED. VERIFY KEYING WITH OWNER.
7. ALL THRESHOLDS TO BE MAXIMUM HEIGHT OF 1/2".
8. DOOR LOCK AND LATCHES SHALL COMPLY WITH UBC SECTION 1004.3 AND ADA.
9. THE AUTHORITY HAVING JURISDICTION MAY INCREASE THE MAXIMUM EFFORT TO OPERATE FIRE DOORS IN ORDER TO ACHIEVE POSITIVE LATCHING, BUT NOT EXCEEDING THE 15 LP MAX.
10. MAXIMUM EFFORT TO OPERATE EXTERIOR DOORS IS 5 LBS.
11. HAND-ACTIVATED DOOR OPENING HARDWARE SHALL BE CENTERED BETWEEN 30" AND 44" A.F.F.
12. PROVIDE 1/4" TEMPERED GLASS AT ALL INTERIOR WINDOW LOCATIONS.
13. MAIN EXTERIOR DOORS: PROVIDE VISIBLE DURABLE SIGN ON THE EGRESS SIDE, ON OR ADJACENT TO THE DOOR, STATING: "THIS DOOR TO REMAIN UNLOCKED WHEN THE BUILDING IS OCCUPIED." THE SIGN SHALL BE IN LETTERS 1" HIGH ON A CONTRASTING BACKGROUND.

FLOOR PLAN NOTES:

1. ALL INSULATION SHALL HAVE FLAME SPREAD RATE NOT TO EXCEED 25 AND A SMOKE DENSITY NOT TO EXCEED 450 WHEN TESTED IN ACCORDANCE WITH STANDARD NO. 42-1.
2. PROVIDE 4'-0" HIGH ANGLE IRON DOOR GUARDS AT FLOOR OF EACH JAMB OF EACH OVERHEAD DOOR OPENING.
3. ALL NEW DRYWALL SHALL BE TAPED, TEXTURED, AND PAINTED WITH ONE (1) COAT VINYL ACRYLIC WALL SEALER AND TWO (2) COATS LO-GLO ACRYLIC SEMI-GLOSS ENAMEL. PROVIDE SAMPLE FOR OWNER'S APPROVAL. PROVIDE LIGHT KNOCKDOWN TEXTURE.
4. RESTROOM DRYWALL SHALL BE WATER RESISTANT TYPE X. RESTROOMS TO HAVE +4' HIGH 12"x12" GLAZED CERAMIC TILE BY "DAL TALE" OR EQUAL, FROM STANDARD COLOR SELECTION WAINSCOT. PAINT DRYWALL ABOVE WITH ONE (1) COAT PRIMER AND TWO (2) COATS SEMI-GLOSS ENAMEL PAINT. USE DUNN-EDWARDS OR FRAZEE.
5. BLOWER ROOM: PROVIDE SAWCUT CONTROL JOINTS AT 5'x5' MINIMUM FOR AREAS WITH SEALED CONCRETE FINISHED FLOOR. RESTROOM AND OPERATIONS ROOM TO RECEIVE 12"x12" VINYL COMPOSITE TILES. PROVIDE VCT AND CERAMIC TILE SAMPLES FOR OWNER'S SELECTION.
6. PROVIDE 4" CERAMIC TILE BASE TO MATCH FLOOR TILE. AT RESTROOM, PROVIDE 6" COVERED CERAMIC TILE BASE.
7. SEE PLUMBING DRAWING FOR FLOOR AREA DRAINAGE AND RESTROOM. PLUMBING DRAWINGS SHALL APPLY FOR APPLICABLE FIXTURES.

WALL FINISH LEGEND

P1 DUNN EDWARDS - FOSSIL

CMU CLEAR SEALER

INSTAL 4" HIGH RESILIENT BASE FOR ALL ROOMS.

FLOOR FINISH LEGEND

SEALED CONCRETE

12"X12" VINYL COMPOSITE TILES

NO	BY	DATE	REVISIONS	DATE	APP.

Registered Professional Engineer (Civil) CERTIFICATE NO. 70097 TAYLOR B. PIERCE Registered Professional Engineer ARIZONA, U.S.A. Expires 12/31/28

PREPARED BY: PACE
DESIGNED BY: NE
DRAWN BY: DS, WW
CHECKED BY: TP
SCALE: AS NOTED
DATE: NOV 2025
JOB NO. B614

THESE DRAWINGS ARE THE PROPERTY OF P.A.C.E. AND SHALL NOT BE REPRODUCED IN ANY MANNER NOR BE USED FOR CONSTRUCTION UNLESS STAMPED 'ISSUED FOR CONSTRUCTION'.

TITLE
BLOWER OPS ARCH PLAN

JOB
TOWN OF JEROME
WASTEWATER
TREATMENT PLANT
YAVAPAI CO. AZ

100% ISSUED FOR BID

PREPARED BY:
PACE
Advanced Water Engineering
8723 E. VIA DE VENTURA, SUITE A-200, SCOTTSDALE, CA 85258
P: (480) 991-3955 | www.pacewater.com
TAYLOR B. PIERCE R.C.E. 70097 DATE

SHEET
A1.0
67 OF 99 SHEETS

JOB NO. B614

W:\B614\Engineering\B614-30sheet\B614 - A2.0 BLOWER OPS ARCH PLAN.dwg - Tab: A1.0 - by reddington on 11/21/25 at 12:26:37 PM

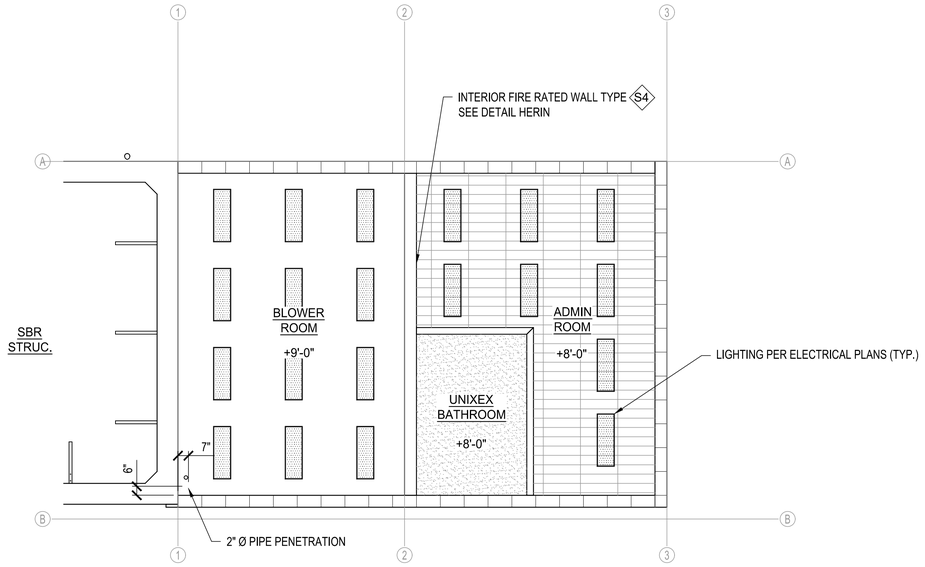

REFLECTED CEILING PLAN

SCALE: 1/4" = 1'-0"

CEILING NOTES:

1. T-BAR SUSPENSION SYSTEM TO BE PROVIDED BY ARMSTRONG OR EQUAL. SEE REFLECTED CEILING PLANS FOR LOCATIONS: 2'X4'X5/8" TILE AND CEILING HEIGHTS. CEILINGS TO BE LAID OUT CENTERED IN ROOMS IN BOTH DIRECTIONS AS SHOWN. HANG T-BAR SUSPENSION SYSTEM FROM ROOF JOISTS WITH DIAGONAL HANGERS TO PREVENT SAGGING. COLOR BY OWNER.
2. RESTROOM PER REFLECTED CEILING PLAN TO HAVE 5/8" DRYWALL CEILINGS. SUPPORT WITH 3-5/8"X22 GAUGE METAL STUDS AT 16" O.C. FOR SPANS 8' OR LESS. FOR SPANS OVER 8' USE 6"X22 GAUGE METAL STUDS AT 16".

CEILING FINISH LEGEND:

- 2'x4'x5/8" SUSPENDED T-BAR CEILING
- 5/8" DRYWALL CEILING
- EXPOSED CEILING
- 2' x 4' RECESSED FLORESCENT LIGHT FIXTURE

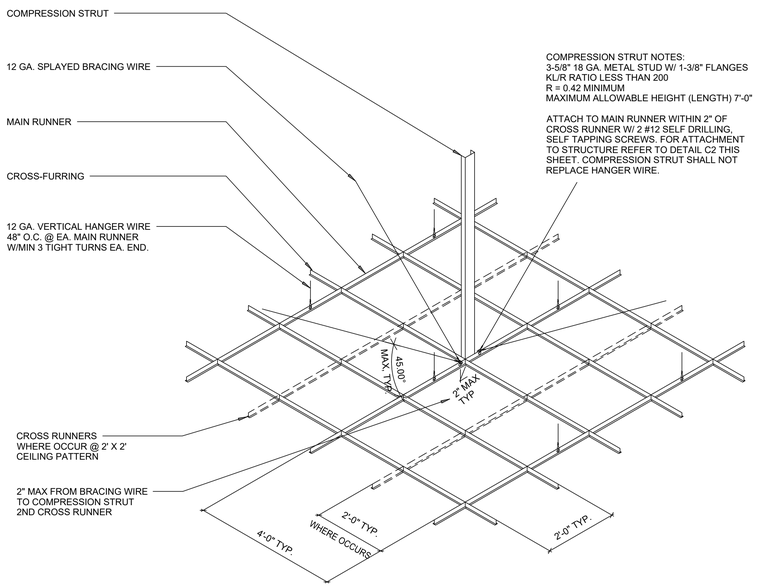

COMPRESSION STRUT NOTES:
3-5/8" 18 GA. METAL STUD W/ 1-3/8" FLANGES
KL/R RATIO LESS THAN 200
R = 0.42 MINIMUM
MAXIMUM ALLOWABLE HEIGHT (LENGTH) 7'-0"

ATTACH TO MAIN RUNNER WITHIN 2" OF CROSS RUNNER W/ 2 #12 SELF DRILLING, SELF TAPPING SCREWS. FOR ATTACHMENT TO STRUCTURE REFER TO DETAIL C2 THIS SHEET. COMPRESSION STRUT SHALL NOT REPLACE HANGER WIRE.

NOTE: PROVIDE SETS OF FOUR SPLAYED BRACING WIRES, ORIENTED 90 DEGREES FROM EACH OTHER, AND COMPRESSION STRUT AT A SPACING NOT MORE THAN 12'-0" x 12'-0" ON CENTER. PROVIDE 12 GAUGE MINIMUM SPLAYED BRACING WIRES FASTENED WITH NOT LESS THAN FOUR TIGHT TURNS IN 1-1/2 INCHES AT BOTH ENDS OF WIRE. SLOPE OF SPLAYED BRACING WIRES SHOULD NOT EXCEED 45 DEGREES FROM THE PLANE OF THE CEILING.

NOTE: PROVIDE HANGER WIRES AT A SPACING NOT MORE THAN 4'-0" X 4'-0" ON CENTER. PROVIDE 8 OR 12 GAUGE MINIMUM HANGER WIRE FASTENED WITH NOT LESS THAN THREE TIGHT TURNS IN 1-1/2 INCHES AT BOTH ENDS OF WIRE.

2'x4' SUSPENDED LAY-IN CEILING GRID

INTERIOR RATED WALL

NO	BY	DATE	REVISIONS	DATE	APP.

Registered Professional Engineer (Civil) CERTIFICATE NO. 47127 Timothy B. Pierce Signed 12/31/25 ARIZONA, U.S.A. Expires 12/31/28

PREPARED BY: PACE
DESIGNED BY: NE
DRAWN BY: DS, WW
CHECKED BY: TP
SCALE: AS NOTED
DATE: NOV 2025
JOB NO.: B614

THESE DRAWINGS ARE THE PROPERTY OF P.A.C.E. AND SHALL NOT BE REPRODUCED IN ANY MANNER NOR BE USED FOR CONSTRUCTION UNLESS STAMPED 'ISSUED FOR CONSTRUCTION'.

TITLE
BLOWER OPS ARCH REFLECTED CEILING PLAN

JOB
TOWN OF JEROME
WASTEWATER
TREATMENT PLANT
YAVAPAI CO. AZ

100% ISSUED FOR BID

PREPARED BY:
PACE
Advanced Water Engineering
8723 E. VIA DE VENTURA, SUITE 290 | SCOTTSDALE, CA 85258
P: (480) 991-3995 | www.pacewater.com
TAYLOR B. PIERCE R.C.E. 70097 DATE

SHEET
A2.0
68 OF 99 SHEETS

JOB NO. B614

W:\B614\Engineering\B614-30\sheets\B614 - A2.0 BLOWER OPS ARCH PLAN.dwg - Tab: A2.0 - by reddington on 11/21/25 at 12:26:57 PM

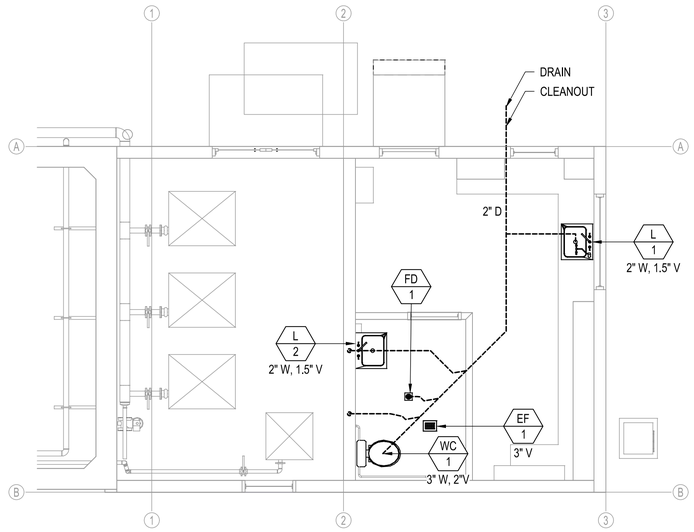

SEWER PLUMBING PLAN

SCALE: 1/4" = 1'-0"

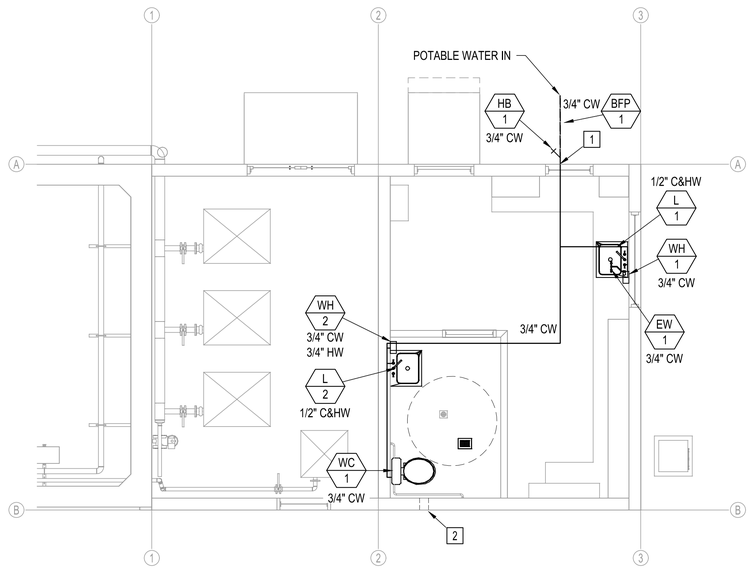

WATER PLUMBING PLAN

SCALE: 1/4" = 1'-0"

PLUMBING NOTES

1. ALL EQUIPMENT & FIXTURE COLD WATER AND HOT WATER CONNECTION SHALL BE INSTALLED W/ ISOLATION VALVE.
2. ALL PLUMBING AND HVAC LINES ARE SCHEMATIC. CONTRACTOR TO INSTALL PER BUILDING CODES.

CONSTRUCTION NOTES

1 INSTALL 2" REDUCED PRESSURE-TYPE BACKFLOW PREVENTER UNIT & ASSEMBLY COMPONENTS. BACKFLOW PREVENTER SHALL BE FEBCO, WATTS, WILKENS, OR APPROVED EQUAL.

2 INSTALL EXHAUST VENT DUCT, DISCHARGE TO WALL.

FIXTURE SCHEDULE

ITEM	FIXTURE	ROUGH-IN CONNECTIONS				DESCRIPTION
		COLD WATER	HOT WATER	WASTE	VENT	(ALL PLUMBING FIXTURES MUST BE APPROVED BY THE ENGINEER & OWNER PRIOR TO PURCHASING)
WC 1	WATER CLOSET (ADA)	1"	--	3"	2"	KOHLER OR AMERICAN STANDARD ADA HEIGHT ELONGATED WITH SLOAN AUTOMATIC FLUSH VALVE.
L 1	LAVATORY	1/2"	1/2"	2"	1-1/2"	ADA BARRIER FREE LAVATORY, COUNTER MOUNTED, WITH EXTRA HOLE FOR SOAP DISPENSER, METERED, SINGLE HANDLE SELF CLOSING FAUCET, LOOSE KEY STOPS WITH RIGID SUPPLIES, GRID DRAIN, P-TRAP.
L 2	SINK	1/2"	1/2"	2"	1-1/2"	ADA BARRIER FREE SINK, WALL MOUNTED, WITH EXTRA HOLE FOR SOAP DISPENSER, METERED, SINGLE HANDLE SELF CLOSING FAUCET, LOOSE KEY STOPS WITH RIGID SUPPLIES, GRID DRAIN, P-TRAP.
WH 1	WATER HEATER	3/4"	3/4"	--	--	RHEEM PERFORMANCE TANKLESS ELECTRIC WATER HEATER. 13 KW, 2.54 GPM
WH 2	WATER HEATER	3/4"	3/4"	--	--	RHEEM PERFORMANCE TANKLESS ELECTRIC WATER HEATER. 13 KW, 2.54 GPM
FD 1	FLOOR DRAIN	--	--	SEE PLAN FOR SIZE		ZURN NO. Z-415-NH-B-P, CAST IRON, COMPLETE WITH ROUND POLISHED NICKEL-BRONZE TOP, FLASHING COLLAR, AND P-TRAP.
HVAC 1	HVAC		--	--	--	1 TON, 12,000 BTU AIR CONDITIONER HEAT PUMP (COOLING/HEATING) SPLIT SYSTEM W/ THERMOSTAT, 16 SEER, 120V 1PH, 60 HZ. INDOOR AIR HANDLER TO BE HORIZONTALLY MOUNTED PER MFR REQUIREMENTS. AIR COMPRESSOR INSTALLED ON ROOF PER PLAN.
HB 1	HOSE BIBB	3/4"	--	--	--	HOSE BIBB MOUNTED 24" ABOVE FINISHED FLOOR.
EW 1	EYE WASH STATION	3/4"	--	--	--	EMERGENCY EYEWASH STATION, GUARDIAN G1000 FAUCET OR EQUAL.
EF 1	EF		--	--	4	100 CFM EXHAUST FAN W/ 100W LIGHT, BROAN MODEL 750 OR EQUAL.
BFP 1	BFP	--	--	--	--	3/4" BACK FLOW PREVENTER

NO	BY	DATE	REVISIONS	DATE	APP.

Registered Professional Engineer (Civil) CERTIFICATE NO. 70097 TAYLOR B. PIERCE Signed ARIZONA, U.S.A. Expires 12/31/28

PREPARED BY: PACE
DESIGNED BY: NE
DRAWN BY: DS, WW
CHECKED BY: TP
SCALE: AS NOTED
DATE: NOV 2025
JOB NO.: B614

TITLE: **BLOWER OPS ARCH SEWER & PLUMBING PLAN**

JOB: TOWN OF JEROME WASTEWATER TREATMENT PLANT — YAVAPAI CO. AZ

100% ISSUED FOR BID

PREPARED BY: TAYLOR B. PIERCE R.C.E 70097 DATE

PACE
Advanced Water Engineering
8723 E. Via de Commercio, Suite 1, Anaheim Hills, CA 92808
P: (480) 991-3995 | www.pacewater.com

SHEET **A3.0**
69 OF 99 SHEETS

JOB NO. B614

THESE DRAWINGS ARE THE PROPERTY OF P.A.C.E. AND SHALL NOT BE REPRODUCED IN ANY MANNER NOR BE USED FOR CONSTRUCTION UNLESS STAMPED 'ISSUED FOR CONSTRUCTION'.

W:\B614\Engineering\B614-30\sheets\B614 - A2.0 BLOWER OPS ARCH PLAN.dwg - Tab: A3.0 - by neddington on 11/21/25 at 12:26:57 PM

CONSTRUCTION NOTES:

1. INSTALL ALUMINUM WINDOW SYSTEM.
2. INSTALL HOLLOW METAL DOOR AND FRAME PER PLAN.

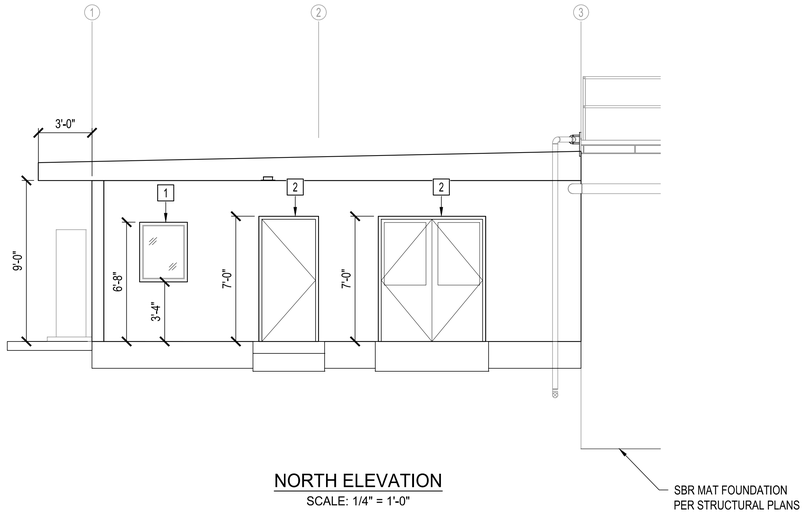

NORTH ELEVATION
SCALE: 1/4" = 1'-0"

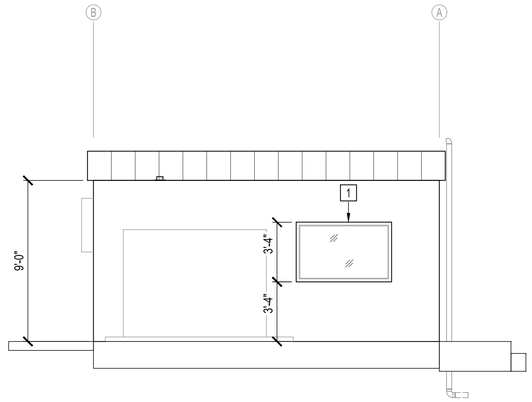

EAST ELEVATION
SCALE: 1/4" = 1'-0"

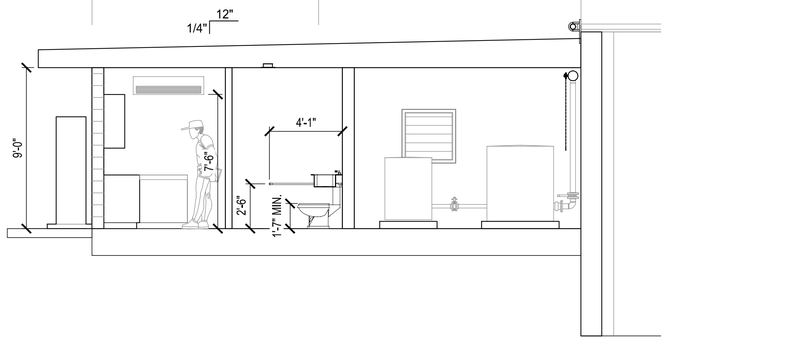

SECTION - A
SCALE: 1/4" = 1'-0"

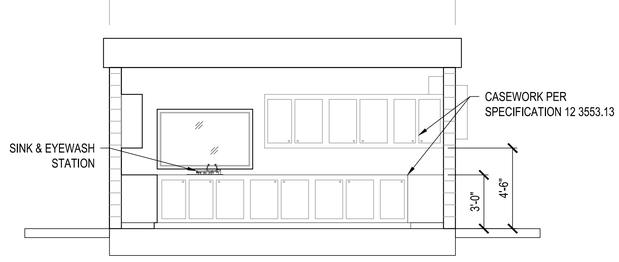

SECTION - B
SCALE: 1/4" = 1'-0"

THESE DRAWINGS ARE THE PROPERTY OF P.A.C.E. AND SHALL NOT BE REPRODUCED IN ANY MANNER NOR BE USED FOR CONSTRUCTION UNLESS STAMPED 'ISSUED FOR CONSTRUCTION'.

NO	BY	DATE	REVISIONS	DATE	APP.

Registered Professional Engineer (Civil) CERTIFICATE NO. 70097 TAYLOR B. PIERCE Signed STATE OF ARIZONA, U.S.A. Expires 12/31/28

PREPARED BY: PACE
DESIGNED BY: NE
DRAWN BY: DS, WW
CHECKED BY: TP
SCALE: AS NOTED
DATE: NOV 2025
JOB NO.: B614

TITLE: **BLOWER OPS ARCH ELEVATIONS & SECTIONS**

JOB: TOWN OF JEROME WASTEWATER TREATMENT PLANT — YAVAPAI CO. AZ

100% ISSUED FOR BID

PREPARED BY: TAYLOR B. PIERCE — R.C.E 70097 — DATE

PACE
Advanced Water Engineering
8723 E. VIA DE COMMERCIO, BLDG. 1, SUITE 1, SCOTTSDALE, AZ 85258
P.: (480) 991-3595 | www.pacewater.com

SHEET **A4.0**
70 OF 99 SHEETS

JOB NO. B614

W:\B614\Engineering\B614-30sheets\B614 - A2.3 BLOWER OPS ARCH SECTIONS.dwg - Tab: A4.0 - by reddington on 11/17/25 at 9:58:04 AM

TOWN OF JEROME WWTP
ELECTRICAL
JEROME, ARIZONA

GENERAL ELECTRICAL NOTES

1. ELECTRICAL WORK SHALL COMPLY WITH THE NATIONAL ELECTRIC CODE (2011), FEDERAL, STATE AND LOCAL JURISDICTION CODES.
2. ALL WORK SHALL BE DONE IN A NEAT, WORKMANLIKE, FINISHED AND SAFE MANNER, ACCORDING TO THE LATEST PUBLISHED NATIONAL ELECTRICAL CONTRACTORS ASSOCIATION STANDARDS OF INSTALLATION, UNDER COMPETENT SUPERVISION.
3. VISIT THE SITE PRIOR TO BIDDING TO BECOME FAMILIAR WITH EXISTING CONDITIONS AND ALL OTHER FACTORS WHICH MAY AFFECT THE EXECUTION OF THIS WORK. INCLUDE ALL RELATED COSTS IN THE INITIAL BID PROPOSAL.
4. CONTRACTOR IS RESPONSIBLE FOR VERIFYING LOCATIONS OF ALL EXISTING UTILITIES AND AVOIDING DAMAGE TO SAME. CONTRACTOR SHALL BE RESPONSIBLE FOR DAMAGE TO UTILITIES CAUSED AS A RESULT OF HIS WORK. CALL (602) 263–1100 FOR BLUE STAKES. IRRIGATION LINES LESS THAN 2" WILL NOT BE MARKED AND SHALL BE REPAIRED IN KIND BY THE CONTRACTOR.
5. PROPER PROTECTION OF THE CONSTRUCTION AREA FOR SAFETY SHALL BE THE RESPONSIBILITY OF THE CONTRACTOR. COVER ALL TRENCHES AT THE END OF EACH WORK DAY. BARRICADES SHALL BE INSTALLED AS DIRECTED BY THE EPCOR OR THE PROJECT INSPECTOR. THE SITE AND ALL WORK SHALL CONFORM TO OSHA REQUIREMENTS.
6. CONTRACTOR SHALL PAY FOR PERMITS AND INSPECTIONS AS MAY BE REQUIRED AND PROVIDE A CERTIFICATE OF INSPECTION TO THE EPCOR.
7. PROTECT ALL MATERIAL AND EQUIPMENT INSTALLED AGAINST DAMAGE BY OTHER TRADES, WEATHER CONDITIONS OR ANY OTHER CAUSES. EQUIPMENT FOUND DAMAGED OR IN OTHER THAN NEW CONDITION WILL BE REJECTED AS DEFECTIVE. ALL COMPONENTS SHALL BE FREE OF DUST, GRIT AND FOREIGN MATERIALS, AND LEFT AS NEW BEFORE FINAL ACCEPTANCE OF WORK.
8. LEAVE THE SITE CLEAN, REMOVE ALL DEBRIS, EMPTY CARTONS, TOOLS, CONDUIT, WIRE SCRAPS AND ALL MISCELLANEOUS SPARE EQUIPMENT AND MATERIALS USED IN THE WORK DURING CONSTRUCTION.
9. IT IS THE OBLIGATION OF THE CONTRACTOR TO ORGANIZE HIS WORK SO THAT A COMPLETE ELECTRICAL, INSTRUMENTATION, AND/OR CONTROL SYSTEM FOR THE FACILITY WILL BE PROVIDED AND SUPPORTED BY ACCURATE SHOP AND RECORD DRAWINGS, AND ALL O & M MANUALS.
10. ALL UNDERGROUND CONDUIT SHALL BE SCHEDULE 40 PVC, BURIED 24" MINIMUM BELOW FINISHED GRADE, UNLESS SPECIFICALLY NOTED OTHERWISE ON PLANS OR IN DETAILS.
11. PROVIDE EMT INDOOR AND GRS OUTDOOR FOR ABOVE GROUND CONDUIT. WHERE METALLIC CONDUITS COME IN CONTACT WITH DIRT, THEY SHALL BE HALF LAP WRAPPED WITH SCOTCH 50 TAPE TO 12" AFG. FITTINGS SHALL BE STEEL, THREADED TYPE WITH INSULATED THROATS. SECURELY ATTACH ALL SURFACE MOUNTED CONDUIT EVERY 10 FEET AND WITHIN 3 FEET OF EACH JUNCTION BOX, PER NEC ARTICLE 344.30. OUTDOOR FLEX CONDUIT SHALL BE LIQUID TITE UV RESISTANT (BLACK) FLEX CONDUIT.
12. UNDERGROUND VERTICAL AND HORIZONTAL 90 DEGREE BEND CONDUIT SHALL BE GRS HALF LAPPED WRAPPED WITH SCOTCHRAP 50 10–MIL TAPE TO 18" MIN ABOVE GRADE WITH A RADIUS OF NOT LESS THAN 18" (FACTORY BENDS ONLY SHALL BE USED)
13. UNDERGROUND CONDUITS SHALL BE A MINIMUM 1".
14. ALL FEEDERS AND BRANCH CIRCUIT WIRE SHALL BE COPPER TYPE XHHW (75 DEGREE C) FOR BELOW GRADE INSTALLATIONS (AND CONDUIT RISERS) AND THHN/THWN (75 DEGREE C) FOR ABOVE GRADE INSTALLATIONS. MINIMUM SIZE SHALL BE #12 AWG, UNLESS SPECIFICALLY NOTED OTHERWISE ON PLANS OR IN DETAILS. ALL WIRING SHALL BE IN CONDUIT.
15. A SEPARATE GREEN INSULATED EQUIPMENT GROUNDING CONDUCTOR (BOND) SHALL BE INSTALLED WITHIN EACH RACEWAY PER NEC CODE.
16. WHEN A PANEL IS SUPPLIED BY A FEEDER OR BRANCH CIRCUIT, ANY INSTALLED GROUNDED CONDUCTOR SHALL NOT BE CONNECTED TO THE EQUIPMENT GROUNDING CONDUCTOR (GEC) OR TO THE GROUNDING ELECTRODE(S) PER NEC ARTICLE 250.32(B).
17. BOND ALL ENCLOSURES PER NEC ARTICLE 250.96.
18. CONTRACTOR SHALL PLAN AND INSTALL WORK IN SUCH A MANNER AS TO CONFORM TO THE STRUCTURE, AVOID OBSTRUCTIONS, PRESERVE HEADROOM AND KEEP OPENINGS AND PASSAGEWAYS CLEAR.
19. CONTRACTOR SHALL PROVIDE ALL LABOR, MATERIAL, ETC. NECESSARY FOR A COMPLETE AND WORKABLE ELECTRICAL SYSTEM WHETHER OR NOT THESE ITEMS ARE SPECIFICALLY NOTED ON THESE DRAWINGS. INCIDENTAL ITEMS NOT INDICATED ON THE DRAWINGS, NOR MENTIONED IN SPECIFICATIONS THAT CAN BE LEGITIMATELY AND REASONABLY INFERRED TO BELONG TO THE WORK DESCRIBED OR BE NECESSARY IN GOOD PRACTICE TO PROVIDE A COMPLETE SYSTEM, SHALL BE FURNISHED AND INSTALLED AS THOUGH ITEMIZED HERE IN EVERY DETAIL.
20. CONTRACTOR IS RESPONSIBLE FOR AND SHALL PROVIDE ALL LABOR, MATERIAL, TRENCHING, CONDUIT, TRANSFORMER PAD AND OTHER REQUIRED EQUIPMENT PER UTILITY COMPANY PLANS AND SPECIFICATIONS NECESSARY FOR A COMPLETE UNDERGROUND CONDUIT SYSTEM FROM THE UTILITY POINT OF SERVICE TO THE UTILITY CO. TRANSFORMER AND FROM THE UTILITY CO. TRANSFORMER TO THE ELECTRICAL SERVICE ENTRANCE SECTION.
21. ALL TRENCHING, CONDUITS, ETC. SHALL BE ROUTED AND INSTALLED IN SUCH A MANNER THAT WILL NOT DAMAGE EXISTING FACILITIES. SHOULD DAMAGE OCCUR, IT WILL BE THE CONTRACTORS RESPONSIBILITY TO REPAIR DAMAGE TO THE SATISFACTION OF THE EPCOR OR INSPECTOR.
22. ALL CONDUIT RUNS SHOWN ON THIS PLAN ARE SCHEMATIC IN NATURE. THE CONTRACTOR SHALL MAKE SURE THAT ALL CONDUIT, ETC. FALLS WITHIN THE CONSTRUCTION AREA/RIGHT OF WAY. (THIS INCLUDES MAINTAINING ALL REQUIRED CLEARANCES.)
23. WHEN CROSSING PATHWAYS OR SIDEWALKS, CONTRACTOR SHALL BORE UNDER EXISTING CONCRETE WALKS AND SAWCUT ASPHALT WALKS. ASPHALT WALKS SHALL BE REPLACED IN KIND.
24. CONTRACTOR SHALL GUARANTEE WORK INSTALLED UNDER THE CONTRACT TO BE FREE FROM DEFECTIVE WORKMANSHIP AND MATERIALS, USUAL WEAR EXPECTED, AND SHOULD ANY SUCH DEFECTS DEVELOP WITHIN A PERIOD OF ONE YEAR ACCEPTANCE OF THE PROJECT BY THE EPCOR, THE CONTRACTOR SHALL REPAIR AND/OR REPLACE ANY DEFECTIVE ITEMS AND DAMAGE RESULTING FROM FAILURE OF THESE ITEMS, AT NO EXPENSE WHATSOEVER TO THE EPCOR.
25. CONTRACTOR SHALL IDENTIFY EQUIPMENT PANELS, DISCONNECTS, PANELS, INSTRUMENTS ETC. USING P&ID NOMENCLATURE WITH 3/32–INCH THICK LAMINATED PHENOLIC TYPE NAMEPLATES WITH 1/4–INCH MINIMUM HEIGHT LETTERS. NAMEPLATE TO BE BLACK MATTE FINISH SURFACE WITH WHITE LETTER ENGRAVING AND BE UV RESISTANT. ATTACH NAMEPLATE TO THE OUTSIDE PANEL FACE WITH TWO STAINLESS STEEL SELF–TAPPING SCREWS. NAMEPLATE SHALL READ THE EQUIPMENT NAME AND P&ID NOMENCLATURE. SEE NEC ARTICLE 230.70(B) FOR SERVICE EQUIPMENT.
26. ALL CIRCUITS SHALL BE LEGIBLY IDENTIFIED AT THE PANEL, JUNCTION BOXES AND AT ALL EQUIPMENT IN A PERMANENT MANNER (I.E. ETCHED PLATES, CONDUCTOR TAG, PERMANENT MARKER, ETC.). THE LABELING SHALL INCLUDE PANEL CIRCUIT NUMBER, "TO" AND "FROM" IDENTIFICATION, AND MARKED "SPARE" WHERE APPLICABLE.
27. CONTRACTOR SHALL TEST ELECTRICAL SYSTEM FOR SHORT CIRCUITS AND MEGGER TEST FEEDERS AND BRANCH CIRCUIT WIRING. CONTRACTOR SHALL INSURE LOW IMPEDANCE GROUND PATH SYSTEM. PROVIDE CERTIFIED TEST RESULTS FOR MEGGER TEST TO EPCOR UPON COMPLETION OF PROJECT.
28. CONTRACTOR SHALL PERFORM HIGH POTENTIAL (HIPOT) TESTING WHEN REQUIRED BY LOCAL JURISDICTION OR EPCOR.
29. CONTRACTOR SHALL PROVIDE A GROUND–FAULT COORDINATION STUDY AND PERFORM RECOMMENDED SETTINGS ON NEW OVERCURRENT PROTECTION DEVICES, PROVIDE LABELS ON EQUIPMENT INDICATING SETTINGS.
30. CONTRACTOR SHALL PROVIDE AN ARC–FLASH STUDY, PROVIDE ALL APPLICABLE LABELS ON NEW EQUIPMENT AFTER STUDY IS COMPLETED.
31. ALL CONDUIT AND J–BOXES SHOWN SHALL BE CONCEALED WHEN POSSIBLE. WHEN NOT POSSIBLE, CONDUIT AND J–BOXES MAY BE SURFACE MOUNTED WITH PERMISSION OF THE EPCOR OR EPCOR'S REPRESENTATIVE.
32. CONTRACTOR SHALL COORDINATE ALL EQUIPMENT CONNECTIONS WITH EQUIPMENT SUPPLIER PRIOR TO ROUGH–IN. PROVIDE ADDITIONAL FUSED DISCONNECT SWITCHES AND CONTROLS IF OVERCURRENT PROTECTION OR CONTROLS IS NOT INTEGRAL WITH UNITS.
33. ALL EQUIPMENT SHALL BE FUSE SIZED PER MANUFACTURES RECOMMENDATIONS AND U.L. APPROVAL.
34. ELECTRICAL DEVICES, DISCONNECT SWITCHES, ETC., SHALL BE SUPPORTED INDEPENDENT OF AND ISOLATED FROM EQUIPMENT VIBRATIONS.
35. FULL LOAD AMPS (FLA) SIZES, AS NOTED IN THESE DRAWINGS, ARE BASED ON SPECIFIED EQUIPMENT DATA. CONTRACTOR SHALL VERIFY NAMEPLATE FLA OF EQUIPMENT SUPPLIED AND COORDINATE ACCORDINGLY PER EQUIPMENT SUPPLIERS RECOMMENDATIONS.
36. ALL OUTDOOR ELECTRICAL EQUIPMENT SHALL BE NEMA–3R OR NEMA–4 ENCLOSURES.
37. CONDUITS OR RACEWAYS ROUTED FROM INDOORS TO OUTDOORS OR AS DESCRIBED IN NEC 300.7(A), SHALL BE SEALED WITH A PLIABLE SEALING COMPOUND AT A CONDUIT BODY OR AT A JUNCTION BOX BEFORE THE CONDUIT ENTERS THE COLDER ENVIRONMENT.
38. CONDUITS OR RACEWAYS INSTALLED IN AREAS WHERE ELEVATION CHANGES MAY CAUSE WATER OR MOISTURE TO ENTER THE ELECTRICAL EQUIPMENT THROUGH THE CONDUIT SHALL BE SEALED WITH A HERMETIC CONDUIT SEAL AT BOTH ENDS OF THE CONDUIT OR RACEWAY.
39. MATERIALS SHALL BE NEW AND OF THE BEST QUALITY WITH MANUFACTURER'S NAME PRINTED THEREON. MATERIALS SHALL BE MANUFACTURED IN ACCORDANCE WITH NEMA, ANSI, UNDERWRITER'S LABORATORY OR OTHER APPLICABLE STANDARDS AND RATED FOR HEAVY DUTY SERVICE.
40. ALL WIRING DEVICES SHALL BE SPECIFICATION GRADE. ALL 15 AND 20 AMP, 125 AND 250 VOLT, NONLOCKING RECEPTACLES INSTALLED OUTDOORS SHALL BE LISTED WEATHER–RESISTANT TYPE. ALL WEATHERPROOF WHILE IN–USE RECEPTACLE COVERS SHALL BE METAL.
41. SELECTION OF MATERIALS SHALL BE IN STRICT ACCORDANCE WITH THE DRAWINGS AND/OR SPECIFICATIONS. THE USE OF MANUFACTURER'S NAME, MODEL, AND NUMBER IS INTENDED TO ESTABLISH STYLE, QUALITY, APPEARANCE, USEFULNESS AND BID PRICE. CONTRACTOR SHALL SUBMIT TO THE EPCOR OR EPCOR'S REPRESENTATIVE FOR REVIEW AND APPROVAL (PRIOR TO ORDERING MATERIALS) COPIES OF EQUIPMENT SHOP DRAWINGS AS FOLLOWS: 1) LIGHT FIXTURES, 2) PUMP CONTROL PANEL 3) RTU/PLC 4) SERVICE ENTRANCE SECTION, 5) ELECTRICAL EQUIPMENT, 6) DISCONNECT SWITCHES, 7) TIME CLOCKS AND OTHER CONTROLS, 8) LIGHTING CONTACTORS AND 9) PULL BOXES. AT THE TIME OF EACH SUBMITTAL, THE CONTRACTOR SHALL DEFINE AND DELINEATE IN WRITING ANY DEVIATIONS FROM THE CONTRACT DOCUMENTS. THE REVIEW WILL BE ONLY FOR CONFORMANCE WITH THE DESIGN CONCEPT OF THE WORK AND FOR COMPLIANCE WITH THE INFORMATION CONTAINED IN THE CONTRACT DOCUMENTS. THE REVIEW OF A SPECIFIED ITEM, AS SUCH, WILL NOT INDICATE REVIEW OF THE ASSEMBLY IN WHICH THE ITEM FUNCTIONS. REVIEW BY THE EPCOR OR EPCOR'S REPRESENTATIVE WILL NOT RELIEVE THE CONTRACTOR FROM RESPONSIBILITY FOR ANY ERRORS OR OMISSIONS IN THE SUBMITTALS NOR FROM HIS RESPONSIBILITY FOR COMPLYING WITH THE CONTRACT DOCUMENTS.
42. THE SUBMITTALS SHALL BE NEATLY GROUPED AND ORGANIZED. PERTINENT INFORMATION SHALL BE HIGHLIGHTED, AND THE SPECIFIC PRODUCT SHALL BE IDENTIFIED. ALL SUBMITTALS SHALL BE COMPLETE, AND PRESENTED IN ONE PACKAGE. THE SUBMITTAL SHALL INCLUDE A COMPLETE LIST OF THE EQUIPMENT AND MATERIALS, INCLUDING THE MANUFACTURER'S NAME, PRODUCT SPECIFICATION, DESCRIPTIVE DATA, TECHNICAL LITERATURE, PERFORMANCE CHARTS, CATALOG CUTS, INSTALLATION INSTRUCTIONS, AND SPARE PART RECOMMENDATIONS FOR EACH DIFFERENT ITEM OF THE EQUIPMENT SPECIFIED.
43. ELECTRICAL CONTRACTOR SHALL HAVE A MINIMUM OF 5 YEARS EXPERIENCE WORKING IN THE WATER/WASTEWATER INDUSTRY AND PROVIDE REFERENCES.

ENGINEER OF RECORD
PACE ADVANCED WATER ENGINEERING
8723 E. VIA DE COMMERCIO, #A–204
SCOTTSDALE, AZ 85258
PHONE: (480) 991–3595
CONTACT: TAYLOR PIERCE
CONTACT: TPIERCE@PACEWATER.COM

ELECTRICAL ENGINEER
WRIGHT ENGINEERING CORPORATION
165 EAST CHILTON DRIVE
CHANDLER, AZ 85225
PHONE: (480) 497–5829
CONTACT: JACOB BIELEFELDT
EMAIL: JBIELEFELDT@WRIGHTENGINEERING.US

PROJECT ADDRESS
TOWN OF JEROME WASTEWATER TREATMENT PLANT
SEWER PLANT ROAD
JEROME, AZ 86331

PRINCIPAL OWNER
TOWN OF JEROME
600 CLARK STREET, P.O. BOX 335
JEROME, AZ 86331

THIS PROJECT

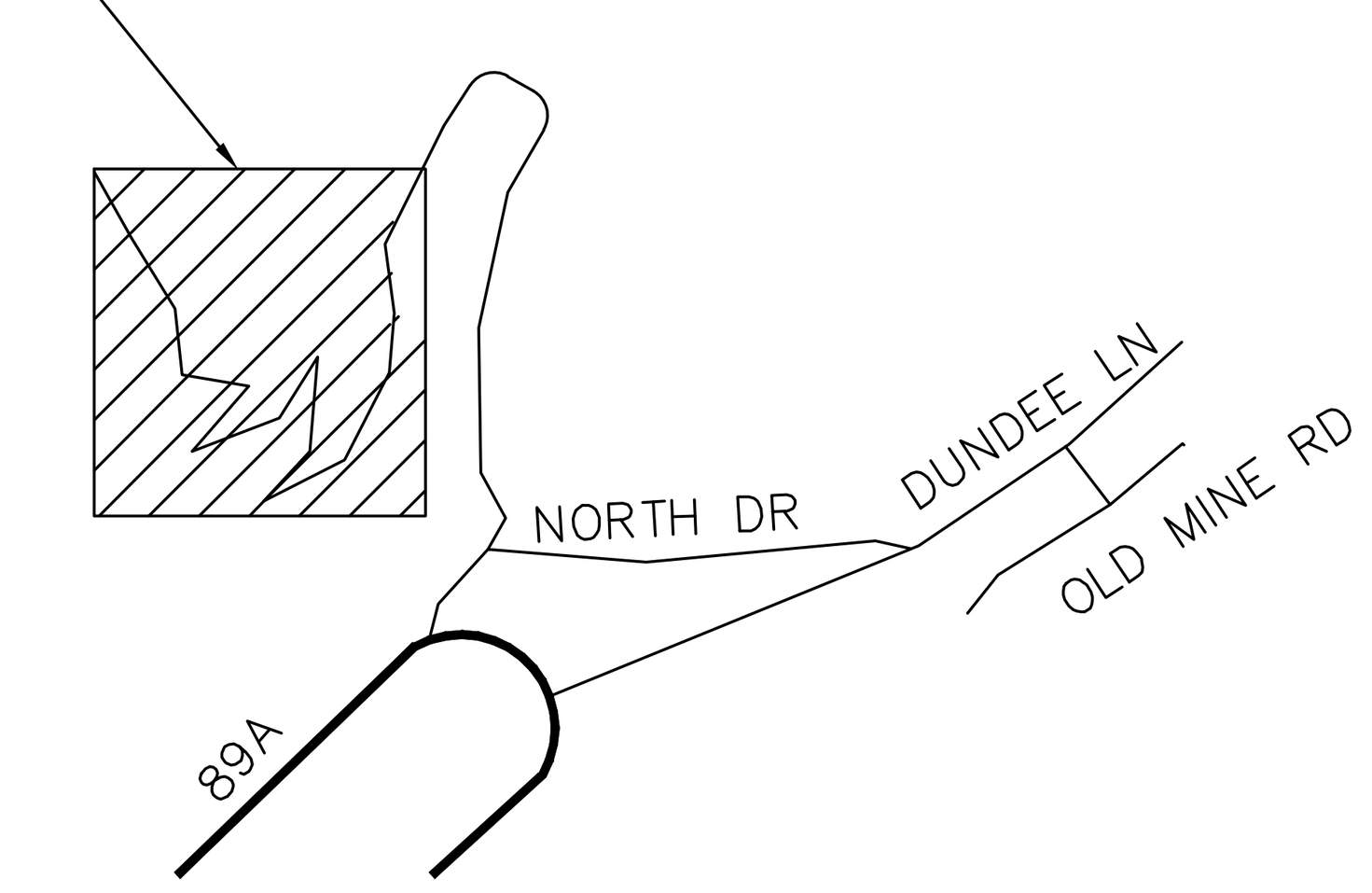

VICINITY MAP
NO SCALE

SHEET INDEX

SHEET E1.1 ELECTRICAL COVER SHEET
SHEET E1.2 ELECTRICAL NOTES + LEGEND
SHEET E2.1 ELECTRICAL SINGLE LINE DIAGRAM I
SHEET E2.2 ELECTRICAL SINGLE LINE DIAGRAM II
SHEET E2.3 ELECTRICAL LOAD CALCULATIONS
SHEET E2.4 ELECTRICAL CONDUIT + WIRE TABLES I
SHEET E2.5 ELECTRICAL CONDUIT + WIRE TABLES II
SHEET E3.1 ELECTRICAL PROPOSED SITE PLAN
SHEET E3.2 ELECTRICAL SBR PLAN
SHEET E3.3 ELECTRICAL DEWATERING PAD
SHEET E3.4 ELECTRICAL BLOWER OPS
SHEET E3.5 ELECTRICAL DRYING BED LIFT STATION
SHEET E3.6 ELECTRICAL OVERFLOW BASIN
SHEET E4.1 ELECTRICAL DETAILS I
SHEET E4.2 ELECTRICAL DETAILS II
SHEET E4.3 ELECTRICAL DETAILS III
SHEET E4.4 ELECTRICAL DETAILS IV
SHEET E4.5 ELECTRICAL DETAILS V
SHEET E4.6 ELECTRICAL DETAILS VI
SHEET E5.1 ELECTRICAL SCHEMATICS I
SHEET E5.2 ELECTRICAL SCHEMATICS II
SHEET E5.3 ELECTRICAL SCHEMATICS III

LIGHT FIXTURE SCHEDULE

SYMBOL	LETTER ID	MANUFACTURER	CATALOG NUMBER	FINISH COLOR	VOLTS	LAMP	LUMENS (MIN)	CCT	MOUNTING HEIGHT	TYPE	DETAIL
	A	LITHONIA LIGHTING	DSX1–LED–P2–30K–80CRI–T5W–MVOLT–PER –SPD20KV–DF–HA–CCE–DBLXD WITH PHOTOCELL, CONTRACTOR SHALL INSTALL IN LINE WITH LIGHT SWITCH TO OVERRIDE.	BLACK	240	68W LED	9,940	3000K	15'–0"	AREA LIGHT	POLE MOUNTED, SEE DETAIL D SHEET SE4.1
	B	LITHONIA LIGHTING	2VTL2–48L–ADP–LP940–BDP	WHITE	120	38.3W LED	4,116	4000K	*	BUILDING CEILING TROFFER 2X2	*CEILING MOUNTED, COORDINATE SURFACE TYPE BY OTHERS.
	C	LITHONIA LIGHTING	WDGE2 LED–P4 30K–80CRI–TFTM–MVOLT–PE–CCE–PIR–DBLXD– (2 OVER DOOR SHALL HAVE BATTERY BACK UP E10WH), CONTRACTOR SHALL INSTALL IN LINE WITH LIGHT SWITCH TO OVERRIDE.	BLACK	120	47W LED	4,002	3000K	*	BUILDING WALLPACK LIGHT	*WALL MOUNTED, 1 FOOT ABOVE DOOR
	D	LITHONIA LIGHTING	FEX–L24–9000LM–FGFL–WD–MVOLT–30K–90 CRI–SPD10KV–IP67–DNAXD CR	BLACK	120	62.5W LED	6,424	3000K	*	CANOPY LIGHT	*CEILING
	E	LITHONIA LIGHTING	AFF–OEL–DWHGXD–UVOLT–LTP–SDRT–FCT–	BLACK	120	2.5W LED	N/A	N/A	*	EMERGENCY EXIT LIGHT	*WALL MOUNTED ABOVE DOOR.
	F	WAC LIGHTING	WS–180137–30K–90–2130	MATCH WATER FAUCET FIXTURE FINISH	120	28W LED	2,130	3000K	*	BUILDING RESTROOM LIGHT	*WALL MOUNTED ABOVE MIRROR.
	G	HOLOPHANE	HPFS–P3–55PG–MVOLT–30K–YMS–20KV–CN P123FT–UBV–DBLXD	BLACK	240	83W LED	12,627	3000K	*	SBR CATWALK FLOODLIGHT, CLASS 1 DIVISION 2	*SEE DETAIL.

NOTE: CONTRACTOR SHALL VERIFY ARCHITECTURE ELEMENTS FOR MOUNTING AND INSTALLATION PRIOR TO ORDERING. CONTRACTOR MAY SUBMIT ALTERNATIVES FOR ENGINEER APPROVED EQUAL.

WRIGHT engineering corporation
ELECTRICAL ENGINEERING AND DESIGN
165 EAST CHILTON DRIVE
CHANDLER, ARIZONA 85225
PHONE: 480.497.5829
FAX: 480.497.5807
www.wrightengineering.us
Wright Project # 23319

CALL TWO WORKING DAYS BEFORE YOU DIG
602-263-1100
1-800-STAKE-IT
(OUTSIDE MARICOPA COUNTY)

ISSUED FOR BID

NO	BY	DATE	REVISIONS	DATE	APP.
1					
2					
3					
4					
5					

Registered Professional Engineer (Electrical) Certificate No. 73954 JACOB BIELEFELDT Date Signed 11-24-2025 Expires 9-30-27

PREPARED BY: WRIGHT ENGINEERING
DESIGNED BY: JHB
DRAWN BY: XAG
CHECKED BY: JHB SCALE: AS NOTED
DATE NOV 2025
JOB NO. B614

THESE DRAWINGS ARE THE PROPERTY OF P.A.C.E. AND SHALL NOT BE REPRODUCED IN ANY MANNER NOR BE USED FOR CONSTRUCTION UNLESS STAMPED "ISSUED FOR CONSTRUCTION".

TITLE
ELECTRICAL COVER SHEET

JOB
TOWN OF JEROME WASTEWATER TREATMENT PLANT
YAVAPAI CO. AZ

PREPARED BY:
PACE Advanced Water Engineering
8723 E. VIA de COMMERICO, SUITE A-204 | SCOTTSDALE, CA 85258
P: (408) 991-3595 | www.pacewater.com

SHEET
E1.1
71 OF 99 SHEETS
JOB NO. B614

H:\2023\23319-Jerome WWTP\23319-E.dwg - Tab: E1.1 - by jacobb on 11/24/25 at 6:56:46 PM

ELECTRICAL SYMBOLS

SINGLE LINE DIAGRAMS

Symbol	Description
(A)	AMMETER
(V)	VOLTMETER
(M)	METER
(KWH)	KILOWATT HOUR METER
AS	AMMETER SWITCH
VS	VOLTMETER SWITCH
GFP	GROUND FAULT PROTECTION
	POWER TRANSFORMER SEE NOTE 1.
A-24	CIRCUIT BREAKER, 3 POLE UNLESS OTHERWISE INDICATED
	DISCONNECT SWITCH, 3 POLE UNLESS OTHERWISE INDICATED
	OIL FUSE CUTOUTS
	FUSE SEE NOTE 3.
	TRANSFER SWITCH, AUTOMATIC
RV SIZE 1	MAGNETIC MOTOR STARTER."1" INDICATES SIZE 1. RV INDICATES REDUCED VOLTAGE. 2S INDICATES 2 SPEED. R INDICATES REVERSING.
	MAGNETIC CONTACTOR
12	CONDUIT NUMBER 12. SEE CONDUIT AND WIRING SCHEDULE FOR SIZES AND QUANTITIES OF CONDUIT AND WIRES.
GND	GROUND
K	KIRK KEY INTERLOCKING OF EQUIPMENT
2 HP	EQUIPMENT FURNISHED, INSTALLED AND CONNECTED UNDER ANOTHER SECTION OF THE CONTRACT.
PFR	PHASE FAILURE RELAY
SA	SURGE ARRESTER
#	EXISTING MOTOR (HP SHOWN)
#	NEW MOTOR (ESTIMATED HP SHOWN)
#	FUTURE MOTOR (ESTIMATED HP SHOWN)
1	MANHOLE
	EYS SEAL

NOTES: (ELECTRICAL SYMBOLS)

1. POWER TRANSFORMERS SHALL BE DRY TYPE 480-208Y/120 VOLTS, 3 PHASE 4 WIRE UNLESS OTHERWISE INDICATED.

2. CONTROL TRANSFORMER SHALL BE DRY TYPE 480-120 VOLTS 1 PHASE UNLESS OTHERWISE INDICATED. SEE CONTROL WIRING DIAGRAMS FOR USE OF 120 VOLT CONTROL CIRCUITS CONTROL TRANSFORMERS SHALL BE SIZED TO HANDLE THE LOADS OF ALL RELAYS, PILOT LIGHTS, ETC. CONNECTED THERE TO PLUS 50 VA EXTRA CAPAOWNER.

3. LOCATED IN OR ON MOTOR CONTROL CENTER UNLESS OTHERWISE INDICATED.

CONTROL WIRING DIAGRAMS

NORMALLY OPEN	NORMALLY CLOSED	DEVICE
		CONTACT
		LIMIT SWITCH
		LIMIT SWITCH HELD CLOSED
		LIMIT SWITCH HELD OPEN
		PRESSURE OR VACUUM SWITCH
		LIQUID LEVEL SWITCH
		TEMPERATURE ACTUATED SWITCH
		FLOW SWITCH (AIR, WATER, ETC.)
		PUSH BUTTON SINGLE CIRCUIT MOMENTARY CONTACT. SEE NOTE 3.
		PUSH BUTTON SINGLE CIRCUIT LOCK-OUT(LOCATED AT MOTOR UNLESS OTHERWISE NOTED)
		TIMED CONTACT- CONTACT ACTION RELAY ON ENERGIZATION.
		TIMED CONTACT- CONTACT ACTION RELAY ON DE-ENERGIZATION.
		ON-OFF SWITCH. SEE NOTE 3.
ESB		EMERGENCY STOP PUSH BUTTON (MAINTAINED CONTACT)
STOP	START	STOP -START PUSH-BUTTON STATION (MAINTAINED CONTACTS). SEE NOTE 3.
H O A		HAND-OFF-AUTO SELECTOR SWITCH SEE NOTE 3. (THREE POSITION).
		TWO POSITION SELECTOR SWITCH SEE NOTE 3.
R		PILOT LIGHT, Y=YELLOW, R=RED, A=AMBER, SEE NOTE 3. B=BLUE, W=WHITE, G=GREEN.
		BELL
		HORN OR SIREN
CR		CONTROL RELAY SEE NOTE 3.
M		STARTER COIL. SEE NOTE 3.
TDR		TIME DELAY RELAY. (0-30 SECONDS UNLESS OTHERWISE NOTED). SEE NOTE 3.
OL'S		MOTOR STARTER OVERLOAD RELAY CONTACTS
		CONTROL TRANSFORMER. SEE NOTES 2
		MANUAL MOTOR STARTER
		SOLENOID OPERATED CONTROL VALVE
1		120 VOLT, 1 PHASE, MOTOR (UNLESS OTHERWISE NOTED)
RTM		RUNNING TIME METER. SEE NOTE 3. (ELAPSED TIME METER)
		SPACE HEATERS. (LOCATED AT MOTOR UNLESS OTHERWISE NOTED).
		TERMINALS IN MOTOR CONTROL CENTER/MCP CONTACT OR DEVICE REMOTE FROM MOTOR CONTROL CENTER/MCP
		TERMINALS IN MOTOR CONTROL CENTER/MCP CONTACT IN MOTOR CONTROL CENTER FOR CONNECTION TO REMOTE DEVICE/MCP
		DEVICE SIGNAL OUTPUT
		DEVICE SIGNAL INPUT

PLANS

Symbol	Description
	CONDUIT RUN CONCEALED UNDER SLAB OR BELOW GRADE. (CONCEALED IN SLAB WHERE SO NOTED OR WHERE ALLOWED PER SPECIFICATIONS).
	CONDUIT RUN EXPOSED UNLESS OTHERWISE NOTED
	EXISTING CONDUIT RUN
	HASH MARKS INDICATE QUANTITY OF #12 WIRES IN CONDUIT (PLUS 1#12 GROUND WIRE) EXCEPT NO HASH MARKS=3/4", 2#12 (PLUS 1#12 GROUND WIRE) UNLESS OTHERWISE NOTED. 3/4", 3#12 — 1", 6#12 3/4", 4#12 — 1", 7#12 3/4", 5#12 — 1", 8#12
L(1,3)	HOMERUN TO PANEL L, CIRCUITS 1 AND 3
	GROUND WIRE
	CONDUIT UP (OUT TOP OF EQUIPMENT)
	CONDUIT DOWN (OUT BOTTOM OF EQUIPMENT)
	CONDUIT STUBBED OUT AND CAPPED
	LIGHTING FIXTURE MOUNTED ON POLE OR POST OR ABOVE PLATFORM
	CEILING MOUNTED LIGHTING FIXTURE
	BRACKET MOUNTED LIGHTING FIXTURE
	FLOODLIGHT
	FLUORESCENT LIGHTING FIXTURE
	POLE MOUNTED LIGHT FIXTURE
	EXIT LIGHT
	RECESSED LIGHTING FIXTURE
	LIGHTING FIXTURES CONNECTED TO EMERGENCY CIRCUITS
A 1/100	LIGHTING FIXTURE TYPE A, 100 WATTS, WITH 1 LAMP. SEE LIGHTING FIXTURE SCHEDULE
$	SINGLE POLE, SINGLE THROW TOGGLE SWITCH (AT +48" OR AS NOTED)
$2	DOUBLE POLE, SINGLE THROW TOGGLE SWITCH (AT +48" OR AS NOTED)
$3	THREE-WAY TOGGLE SWITCH (AT +48" OR AS NOTED)
$4	FOUR-WAY TOGGLE SWITCH (AT +48" OR AS NOTED)
$M	MANUAL MOTOR STARTER (AT +48" OR AS NOTED)
$a	OUTLETS SHOWN WITH SUBSCRIPT "a" ADJACENT TO THEM SHALL BE CONTROLLED BY S a
	DUPLEX CONVENIENCE RECEPTACLE AT +12" OR AS NOTED
	SINGLE CONVENIENCE RECEPTACLE AT +12" OR AS NOTED
	SPECIAL PURPOSE RECEPTACLE AT +12" OR AS NOTED, RATING AS INDICATED
	JUNCTION BOX, SIZE AS REQUIRED BY CODE
	THERMOSTAT OUTLET AT +54"
	CLOCK OUTLET AT +7'-6" OR AS NOTED
	TELEPHONE OUTLET AT +12" OR AS NOTED
	TELEPHONE FLOOR OUTLET
	HORN
P	CONTROL DEVICE P = PRESSURE SWITCH ZS = LIMIT SWITCH L = LEVEL SWITCH V = CONTROL VALVE
	CONTROL STATION: PUSH-BUTTON STATION OR SELECTOR SWITCH. SEE CONTROL WIRING DIAGRAMS FOR REQUIREMENTS.
M	EXISTING MOTOR
M	NEW MOTOR
M	FUTURE MOTOR
	GROUND WELL
	GROUND ROD
	DISCONNECT SWITCH. SEE SINGLE LINE DIAGRAM FOR SIZE.
	LIGHTING PANEL. SURFACE MOUNTED.
	SWITCHBOARD, DISTRIBUTION PANEL OR MOTOR CONTROL CENTER
12	CONDUIT NUMBER 12. SEE CONDUIT AND WIRING SCHEDULE FOR SIZES AND QUANTITIES OF CONDUIT AND WIRES.
+12"	INDICATES HEIGHT FROM FINISHED FLOOR OR GRADE TO CENTERLINE OF DEVICE.
(1)	INDICATES TO REFER TO NOTE (1) ON DRAWING
W.P.	WEATHERPROOF. PROVIDE GASKETS AS REQUIRED
C.O.	CONDUIT ONLY
FE-184	INSTRUMENTATION DEVICE. SEE PROCESS AND INSTRUMENTATION DRAWINGS FOR DESCRIPTIONS.
	PULL BOX (SIZE AS REQUIRED)
	OUTPUT TERMINAL
	INPUT TERMINAL

CONSTRUCTION NOTES

(1) REMOVE ALL EXISTING CUSTOMER OWNED OVERHEAD ELECTRICAL AND POWER POLE AND DISPOSE OF PROPERLY. COORDINATE WITH OWNER FOR SCHEDULING.

(2) REMOVE EXISTING SES AND PANEL AND DISPOSE OF PROPERLY. COORDINATE DISCONNECTION OF THE METER AND SECONDARY CONDUCTORS WITH APS

(3) DE-ENERGIZE EXISTING LAB BUILDING UPON COMPLETION OF CONSTRUCTION OF THE NEW LAB. REMOVE ALL EXISTING CONDUCTORS AND ELECTRICAL EQUIPMENT AND DISPOSE OF PROPERLY. COORDINATE ALL WORK WITH OWNER AND POWER COMPANY PRIOR TO DE-ENERGIZATION.

(4) COORDINATE WITH APS TO REPLACE THE EXISTING POLE MOUNTED SINGLE PHASE TRANSFORMER. APS TO INSTALL THREE PHASE TRANSFORMERS. CONTRACTOR SHALL VERIFY LOCATION OF NEW TRANSFORMER WITH APS. APS PLANS WILL DETERMINE EXACT LOCATION AND TAKE PRECEDENCE OVER THESE DRAWINGS. COORDINATE ALL WORK WITH APS.

(5) APS SERVICE LINE. TRENCH AND INSTALL CONDUIT PER APS SPECIFICATIONS. POWER COMPANY PLANS WILL DETERMINE EXACT LOCATION OF CONDUIT AND TAKE PRECEDENCE OVER THESE DRAWINGS.

(6) SES, 400 AMP, 277/480V, 3Ø, 4W, SEE DETAIL 1 ON E4.1.

(7) MINI-POWER ZONE AND PANELBOARD. SEE DETAIL 1 ON E4.1.

(8) ATS 400A 277/480V, 3Ø, 4W, SEE DETAIL 2 ON SHEET E4.1.

(9) GENERATOR 125KW, 277/480V, 3Ø, 4W, SEE DETAIL 1 ON E4.3.

(10) TRANSFORMER 50KVA 480V - 120/240V 1Ø, SEE DETAIL 2 ON SHEET E4.1.

(11) PANELBOARD, 120/240V, 1Ø, 3W, SEE DETAIL 2 ON E4.1.

(12) DISTRIBUTION PANEL DSP-1 400A 277/480V, 3Ø, 4W, SEE DETAIL 2 ON SHEET E4.1.

(13) ELECTRICAL CONTRACTOR SHALL INSTALL POWER FEED TO MINI SPLIT AIR CONDITIONER AND HEAT PUMP & MAKE ALL 240V CONNECTIONS.

(14) TANKLESS WATER HEATER & DISCONENCT. ELECTRICAL CONTRACTOR SHALL MAKE ALL POWER AND CONTROL CONNECTIONS PER THESE PLANS AND SPECIFICATIONS AND THE MANUFACTURERS REQUIREMENTS.

(15) GROUNDING ELECTRODE CONDUCTORS, GROUND ROD, AND INSPECTION WELL FOR ONLY THE FIRST GROUND ROD, PER SINGLE LINE DIAGRAMS AND DETAILS ON SHEET E4.6.

(16) LIGHTNING PROTECTION SYSTEM, PER NFPA AND DETAIL 6 ON SHEET E4.6

(17) CLASSIFIED SEAL OFF LISTED FOR CLASS 1 DIV 1. LOCATE WITHIN 10 FEET OF CLASSIFIED AREA BOUNDARY. PVC COATED RMS EYS TYPE OR EQUIVALENT. SEAL SHALL HAVE SEALING COMPOUND CHICO, OR EQUAL.

(20) 20A HEADWORKS CONTROL PANEL, BY VENDOR CLASS 1 DIVISION 2 LISTED. ELECTRICAL CONTRACTOR SHALL MAKE ALL POWER AND CONTROL CONNECTIONS PER THESE PLANS AND SPECIFICATIONS AND THE MANUFACTURERS REQUIREMENTS. SEE DETAIL 1 ON SHEET E4.4.

(21) INFLUENT COARSE SCREEN MOTOR. ELECTRICAL CONTRACTOR SHALL MAKE ALL POWER AND CONTROL CONNECTIONS PER THESE PLANS AND SPECIFICATIONS AND THE MANUFACTURERS REQUIREMENTS.

(22) INFLUENT CONVEYOR MOTOR. ELECTRICAL CONTRACTOR SHALL MAKE ALL POWER AND CONTROL CONNECTIONS PER THESE PLANS AND SPECIFICATIONS AND THE MANUFACTURERS REQUIREMENTS.

(23) POTABLE SOLENOID VALVE AT HEADWORKS. ELECTRICAL CONTRACTOR SHALL MAKE ALL POWER AND CONTROL CONNECTIONS PER THESE PLANS AND SPECIFICATIONS AND THE MANUFACTURERS REQUIREMENTS.

(24) ULTRASONIC LEVEL TRANSDUCER. ELECTRICAL CONTRACTOR SHALL MAKE ALL POWER AND CONTROL CONNECTIONS PER THESE PLANS AND SPECIFICATIONS AND THE MANUFACTURERS REQUIREMENTS.

(30) SBR PANEL BY VENDOR, ELECTRICAL CONTRACTOR SHALL MAKE ALL POWER AND CONTROL CONNECTIONS PER THESE PLANS AND SPECIFICATIONS AND THE MANUFACTURERS REQUIREMENTS.

(31) SBR INFLUENT VALVE. ELECTRICAL CONTRACTOR SHALL MAKE ALL POWER AND CONTROL CONNECTIONS PER THESE PLANS AND SPECIFICATIONS AND THE MANUFACTURERS REQUIREMENTS.

(32) SBR SUBMERSIBLE MIXER. ELECTRICAL CONTRACTOR SHALL MAKE ALL POWER AND CONTROL CONNECTIONS PER THESE PLANS AND SPECIFICATIONS AND THE MANUFACTURERS REQUIREMENTS.

(33) WAS TRANSFER PUMP. ELECTRICAL CONTRACTOR SHALL MAKE ALL POWER AND CONTROL CONNECTIONS PER THESE PLANS AND SPECIFICATIONS AND THE MANUFACTURERS REQUIREMENTS.

(34) DECANT MOTOR. ELECTRICAL CONTRACTOR SHALL MAKE ALL POWER AND CONTROL CONNECTIONS PER THESE PLANS AND SPECIFICATIONS AND THE MANUFACTURERS REQUIREMENTS.

(35) SBR DECANT VALVE. ELECTRICAL CONTRACTOR SHALL MAKE ALL POWER AND CONTROL CONNECTIONS PER THESE PLANS AND SPECIFICATIONS AND THE MANUFACTURERS REQUIREMENTS.

(36) DO TRANSMITTER AND ANALYZER. ELECTRICAL CONTRACTOR SHALL MAKE ALL POWER AND CONTROL CONNECTIONS PER THESE PLANS AND SPECIFICATIONS AND THE MANUFACTURERS REQUIREMENTS.

(37) SUBMERSIBLE PRESSURE TRANSDUCER. ELECTRICAL CONTRACTOR SHALL MAKE ALL POWER AND CONTROL CONNECTIONS PER THESE PLANS AND SPECIFICATIONS AND THE MANUFACTURERS REQUIREMENTS.

(38) LEVEL FLOAT. ELECTRICAL CONTRACTOR SHALL MAKE ALL POWER AND CONTROL CONNECTIONS PER THESE PLANS AND SPECIFICATIONS AND THE MANUFACTURERS REQUIREMENTS.

(39) SBR MOTOR CONTROL PANEL, PROVIDE AND INSTALL. ELECTRICAL CONTRACTOR SHALL MAKE ALL POWER AND CONTROL CONNECTIONS PER THESE PLANS AND SPECIFICATIONS AND THE MANUFACTURERS REQUIREMENTS.

(40) SBR EFFLUENT VALVE. ELECTRICAL CONTRACTOR SHALL MAKE ALL POWER AND CONTROL CONNECTIONS PER THESE PLANS AND SPECIFICATIONS AND THE MANUFACTURERS REQUIREMENTS.

(41) FLOW METER. ELECTRICAL CONTRACTOR SHALL MAKE ALL POWER AND CONTROL CONNECTIONS PER THESE PLANS AND SPECIFICATIONS AND THE MANUFACTURERS REQUIREMENTS.

(42) SBR AIR VALVE. ELECTRICAL CONTRACTOR SHALL MAKE ALL POWER AND CONTROL CONNECTIONS PER THESE PLANS AND SPECIFICATIONS AND THE MANUFACTURERS REQUIREMENTS.

(50) VARIABLE FREQUENCY DRIVE. ELECTRICAL CONTRACTOR SHALL MAKE ALL POWER AND CONTROL CONNECTIONS PER THESE PLANS AND SPECIFICATIONS AND THE MANUFACTURERS REQUIREMENTS.

(51) SBR AERATION BLOWER WITH INTEGRAL DISCONNECT. ELECTRICAL CONTRACTOR SHALL MAKE ALL POWER AND CONTROL CONNECTIONS PER THESE PLANS AND SPECIFICATIONS AND THE MANUFACTURERS REQUIREMENTS.

(52) DIGESTER AERATION BLOWER WITH INTEGRAL DISCONNECT. ELECTRICAL CONTRACTOR SHALL MAKE ALL POWER AND CONTROL CONNECTIONS PER THESE PLANS AND SPECIFICATIONS AND THE MANUFACTURERS REQUIREMENTS.

(53) PRESSURE TRANSDUCER. ELECTRICAL CONTRACTOR SHALL MAKE ALL POWER AND CONTROL CONNECTIONS PER THESE PLANS AND SPECIFICATIONS AND THE MANUFACTURERS REQUIREMENTS.

(54) TEMPERATURE TRANSDUCER. ELECTRICAL CONTRACTOR SHALL MAKE ALL POWER AND CONTROL CONNECTIONS PER THESE PLANS AND SPECIFICATIONS AND THE MANUFACTURERS REQUIREMENTS.

(60) 20A SLUDGE BAGGING SYSTEM CONTROL PANEL, BY VENDOR. ELECTRICAL CONTRACTOR SHALL MAKE ALL POWER AND CONTROL CONNECTIONS PER THESE PLANS AND SPECIFICATIONS AND THE MANUFACTURERS REQUIREMENTS.

(61) POTABLE WATER VALVE. ELECTRICAL CONTRACTOR SHALL MAKE ALL POWER AND CONTROL CONNECTIONS PER THESE PLANS AND SPECIFICATIONS AND THE MANUFACTURERS REQUIREMENTS.

(62) POLYMER METERING PUMP. ELECTRICAL CONTRACTOR SHALL MAKE ALL POWER AND CONTROL CONNECTIONS PER THESE PLANS AND SPECIFICATIONS AND THE MANUFACTURERS REQUIREMENTS.

(63) DRY POLYMER MIXER. ELECTRICAL CONTRACTOR SHALL MAKE ALL POWER AND CONTROL CONNECTIONS PER THESE PLANS AND SPECIFICATIONS AND THE MANUFACTURERS REQUIREMENTS.

(64) DEWATERING FEED PUMP. ELECTRICAL CONTRACTOR SHALL MAKE ALL POWER AND CONTROL CONNECTIONS PER THESE PLANS AND SPECIFICATIONS AND THE MANUFACTURERS REQUIREMENTS.

(70) 30A DRYING BED LIFT PUMP CONTROL PANEL, 480V, 3Ø, 4W. ELECTRICAL CONTRACTOR SHALL MAKE ALL POWER AND CONTROL CONNECTIONS PER THESE PLANS AND SPECIFICATIONS AND THE MANUFACTURERS REQUIREMENTS. SEE DETAIL 1 ON SHEET E4.4.

(71) DRYING BED LIFT PUMP. ELECTRICAL CONTRACTOR SHALL MAKE ALL POWER AND CONTROL CONNECTIONS PER THESE PLANS AND SPECIFICATIONS AND THE MANUFACTURERS REQUIREMENTS. SEE DETAIL 4 ON SHEET E4.5.

(72) LEVEL FLOAT. ELECTRICAL CONTRACTOR SHALL MAKE ALL POWER AND CONTROL CONNECTIONS PER THESE PLANS AND SPECIFICATIONS AND THE MANUFACTURERS REQUIREMENTS. SEE DETAIL 4 ON SHEET E4.5.

(80) OVERFLOW LIFT PUMP CONTROL PANEL, BY VENDOR. 240V, 1Ø, 3W. ELECTRICAL CONTRACTOR SHALL MAKE ALL POWER AND CONTROL CONNECTIONS PER THESE PLANS AND SPECIFICATIONS AND THE MANUFACTURERS REQUIREMENTS. SEE DETAIL 1 ON SHEET E4.4.

(81) OVERFLOW LIFT PUMP. ELECTRICAL CONTRACTOR SHALL MAKE ALL POWER AND CONTROL CONNECTIONS PER THESE PLANS AND SPECIFICATIONS AND THE MANUFACTURERS REQUIREMENTS. SEE DETAIL 4 ON SHEET E4.5.

(82) LEVEL FLOAT. ELECTRICAL CONTRACTOR SHALL MAKE ALL POWER AND CONTROL CONNECTIONS PER THESE PLANS AND SPECIFICATIONS AND THE MANUFACTURERS REQUIREMENTS. SEE DETAIL 4 ON SHEET E4.5.

(90) JOINT TRENCH WITH WATER LINES. MAINTAIN 24-INCH SEPARATION. SEE DETAIL 3 ON SHEET E4.3.

(91) STACKED #7 CONCRETE PULL BOX. INSTALL AS SHOWN OR AS NEEDED IF CONDUIT RUNS WILL EXCEED 360 DEGREE OF BENDS OR THE LENGTH EXCEEDS 400 FEET. INSTALL 1 FOR POWER AND 1 FOR CONTROL. SEE DETAIL 5 ON SHEET E4.3.

(92) STANCHION MOUNTED NEMA 4X SST JUNCTION BOXES. MAINTAIN 3' CLEARANCE IN FRONT OF EQUIPMENT. EXTRA SLACK SHALL REMAIN IN THE J-BOX FOR FUTURE LEVEL ADJUSTMENT. SEE DETAIL 2 ON SHEET E4.2 AND DETAIL 1 ON SHEET E4.4.

(93) TRAFFIC BOLLARD TO BE INSTALLED PER CIVIL PLANS. LOCATE OUT OF 4 FOOT WORKING SPACE ENVELOPE PER NEC.

(94) NON-FUSED DISCONNECT, NEMA 4X FOR OUTDOOR AND CLASS 1 DIV 1 WITHIN CLASSIFIED BOUNDARY. IF LOCATION IS ABOVE BOUNDARY, NEMA 4X WITH CLASSIFIED SEAL OFFS IS ACCEPTABLE. PROVIDE PERMANENT LABEL SUITABLE FOR CORROSIVE ENVIRONMENTS AND UV RESISTANT. MATCH LABEL NAMING CONVENTION WITH P&ID. SEE DETAIL 5 ON SHEET E4.2 & SEE DETAIL 1 ON SHEET E4.4.

(95) ROTARY TYPE DISCONNECT, NEMA 4X FOR OUTDOOR AND CLASS 1 DIV 1 WITHIN CLASSIFIED BOUNDARY. IF LOCATION IS ABOVE BOUNDARY, NEMA 4X WITH CLASSIFIED SEAL OFFS IS ACCEPTABLE. PROVIDE PERMANENT LABEL SUITABLE FOR CORROSIVE ENVIRONMENTS AND UV RESISTANT. MATCH LABEL NAMING CONVENTION WITH P&ID. SEE DETAIL 5 ON SHEET E4.2 & SEE DETAIL 1 ON SHEET E4.4.

(96) E-STOP, NEMA 4X FOR OUTDOOR AND CLASS 1 DIV 1 WITHIN CLASSIFIED BOUNDARY. IF LOCATION IS ABOVE BOUNDARY, NEMA 4X WITH CLASSIFIED SEAL OFFS IS ACCEPTABLE. PROVIDE PERMANENT LABEL SUITABLE FOR CORROSIVE ENVIRONMENTS AND UV RESISTANT. MATCH LABEL NAMING CONVENTION WITH P&ID. SEE DETAIL 5 ON SHEET E4.2.

(97) 20A 120V GFCI DUPLEX RECEPTACLE WITH METAL WEATHERPROOF WHILE-IN-USE AND LOCKABLE COVER INSTALLED PER DETAIL 1 ON SHEET E4.2.

(98) 20A 120V GFCI DUPLEX RECEPTACLE WITH METAL WEATHERPROOF WHILE-IN-USE AND LOCKABLE COVER INSTALLED ONTO LIGHT POLE. SEE DETAIL 2 ON SHEET E4.5.

(99) CLASSIFIED AREA VERIFY BOUNDARY WITH THE NFPA. INSTALL ANY PANELS, DISCONNECTS, SPLICES, ARC MAKING EQUIPMENT OUT OF THE BOUNDARY, WHERE NOT POSSIBLE THEN INSTALL CLASS 1 DIV 1 LISTED EQUIPMENT. ALL CONDUIT WITHIN BOUNDARY SHALL BE CLASS 1 DIV 1 OR 2 RATED AS REQUIRED BY THE BOUNDARY. USE PVC COATED THREADED RMC CONDUIT, INSTALL STAINLESS STEEL 316 ENCLOSURES, HARDWARE AND EQUIPMENT WITHIN 10 FEET OF THE BOUNDARY. INSTALL CLASSIFIED SEAL OFFS WITHIN 10 FEET OF THE BOUNDARY, AT A PANEL OR JUNCTION BOX IS PREFERRED.

WRIGHT engineering corporation
ELECTRICAL ENGINEERING AND DESIGN
165 EAST CHILTON DRIVE
CHANDLER, ARIZONA 85225
PHONE: 480.497.5829
FAX: 480.497.5807
www.wrightengineering.us
Wright Project # 23319

CALL TWO WORKING DAYS BEFORE YOU DIG
602-263-1100
1-800-STAKE-IT
(OUTSIDE MARICOPA COUNTY)

ISSUED FOR BID

NO	BY	DATE	REVISIONS	DATE	APP.

Registered Professional Engineer (Electrical) Certificate No. 73954 JACOB BIELEFELDT Date Signed 11-24-2025 Expires 9-30-27

PREPARED BY:	WRIGHT ENGINEERING
DESIGNED BY:	JHB
DRAWN BY:	XAG
CHECKED BY:	JHB
SCALE:	AS NOTED
DATE	NOV 2025
JOB NO.	B614

TITLE: ELECTRICAL NOTES + LEGEND

JOB: TOWN OF JEROME WASTEWATER TREATMENT PLANT
YAVAPAI CO. AZ

PREPARED BY: PACE Advanced Water Engineering
8723 E. VIA de COMMERCIO, SUITE A-204 | SCOTTSDALE, CA 85258
P: (408) 991-3595 | www.pacewater.com

SHEET E1.2
72 OF 99 SHEETS
JOB NO. B614

THESE DRAWINGS ARE THE PROPERTY OF P.A.C.E. AND SHALL NOT BE REPRODUCED IN ANY MANNER NOR BE USED FOR CONSTRUCTION UNLESS STAMPED "ISSUED FOR CONSTRUCTION".

H:\2023\23319-Jerome WWTP\23319-E.dwg - Tab: E1.2 - by jacobb on 11/24/25 at 6:56:46 PM

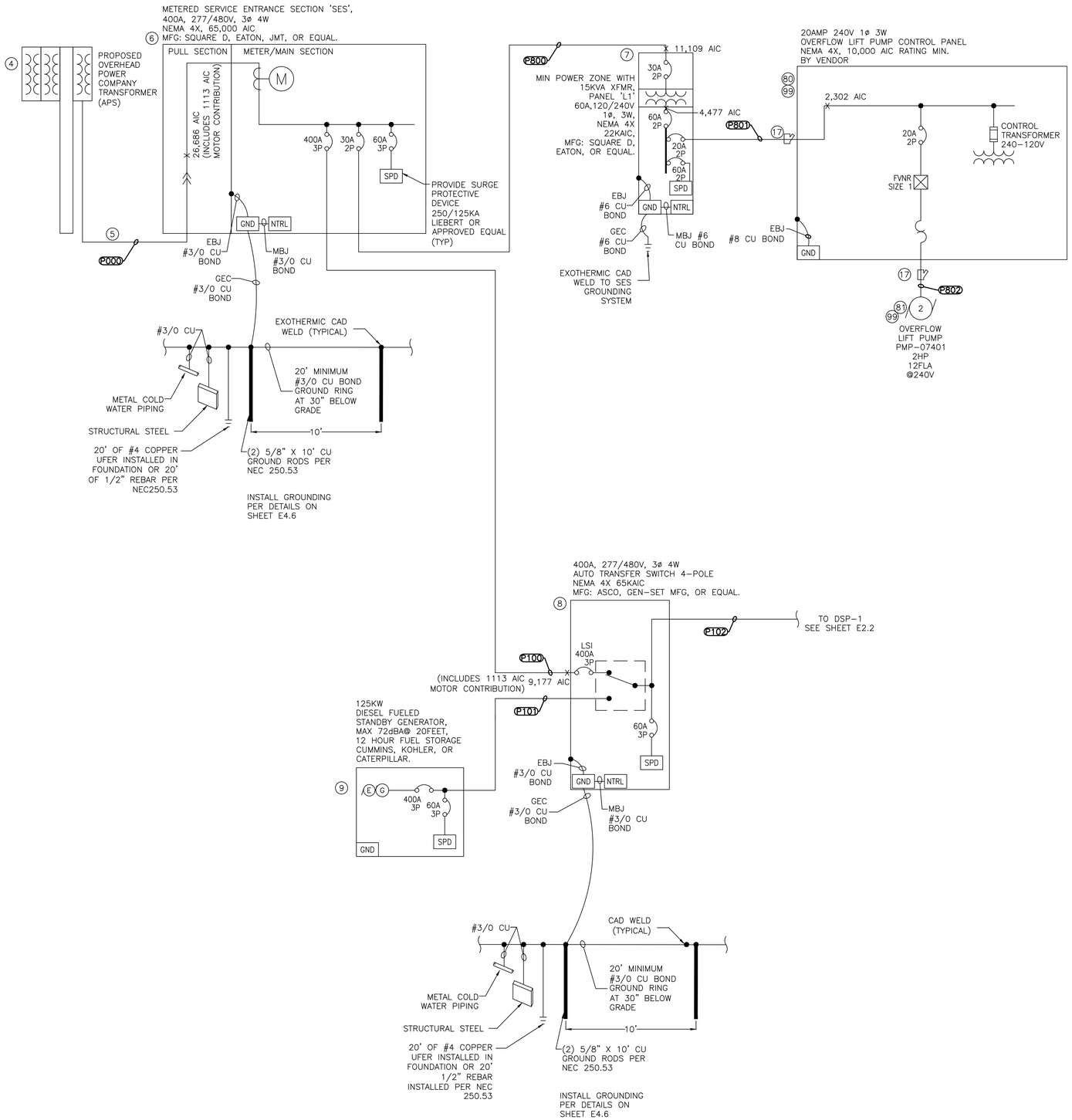

CONSTRUCTION NOTES

4. COORDINATE WITH APS TO REPLACE THE EXISTING POLE MOUNTED SINGLE PHASE TRANSFORMER. APS TO INSTALL THREE PHASE TRANSFORMERS. CONTRACTOR SHALL VERIFY LOCATION OF NEW TRANSFORMER WITH APS. APS PLANS WILL DETERMINE EXACT LOCATION AND TAKE PRECEDENCE OVER THESE DRAWINGS. COORDINATE ALL WORK WITH APS.
5. APS SERVICE LINE. TRENCH AND INSTALL CONDUIT PER APS SPECIFICATIONS. POWER COMPANY PLANS WILL DETERMINE EXACT LOCATION OF CONDUIT AND TAKE PRECEDENCE OVER THESE DRAWINGS.
6. SES, 400 AMP, 277/480V, 3ø, 4W, SEE DETAIL 1 ON E4.1.
7. MINI-POWER ZONE AND PANELBOARD. SEE DETAIL 1 ON E4.1.
8. ATS 400A 277/480V, 3ø, 4W, SEE DETAIL 2 ON SHEET E4.1.
9. GENERATOR 125KW, 277/480V, 3ø, 4W, SEE DETAIL 1 ON E4.3.
17. CLASSIFIED SEAL OFF LISTED FOR CLASS 1 DIV 1. LOCATE WITHIN 10 FEET OF CLASSIFIED AREA BOUNDARY. PVC COATED RMS EYS TYPE OR EQUIVALENT. SEAL SHALL HAVE SEALING COMPOUND CHICO, OR EQUAL.
80. OVERFLOW LIFT PUMP CONTROL PANEL, BY VENDOR. 240V, 1ø, 3W. ELECTRICAL CONTRACTOR SHALL MAKE ALL POWER AND CONTROL CONNECTIONS PER THESE PLANS AND SPECIFICATIONS AND THE MANUFACTURERS REQUIREMENTS. SEE DETAIL 1 ON SHEET E4.4.
81. OVERFLOW LIFT PUMP. ELECTRICAL CONTRACTOR SHALL MAKE ALL POWER AND CONTROL CONNECTIONS PER THESE PLANS AND SPECIFICATIONS AND THE MANUFACTURERS REQUIREMENTS. SEE DETAIL 4 ON SHEET E4.5.
99. CLASSIFIED AREA VERIFY BOUNDARY WITH THE NFPA. INSTALL ANY PANELS, DISCONNECTS, SPLICES, ARC MAKING EQUIPMENT OUT OF THE BOUNDARY, WHERE NOT POSSIBLE THEN INSTALL CLASS 1 DIV 1 LISTED EQUIPMENT. ALL CONDUIT WITHIN BOUNDARY SHALL BE CLASS 1 DIV 1 OR 2 RATED AS REQUIRED BY THE BOUNDARY. USE PVC COATED THREADED RMC CONDUIT. INSTALL STAINLESS STEEL 316 ENCLOSURES, HARDWARE AND EQUIPMENT WITHIN 10 FEET OF THE BOUNDARY. INSTALL CLASSIFIED SEAL OFFS WITHIN 10 FEET OF THE BOUNDARY, AT A PANEL OR JUNCTION BOX IS PREFERRED.

1A SINGLE LINE DIAGRAM
NO SCALE

277/480V 3ø 4W

WRIGHT engineering corporation
ELECTRICAL ENGINEERING AND DESIGN
165 EAST CHILTON DRIVE
CHANDLER, ARIZONA 85225
PHONE: 480.497.5829
FAX: 480.497.5807
www.wrightengineering.us
Wright Project # 23319

CALL TWO WORKING DAYS BEFORE YOU DIG
602-263-1100
1-800-STAKE-IT
(OUTSIDE MARICOPA COUNTY)

NO	BY	DATE	REVISIONS	DATE	APP.

Registered Professional Engineer (Electrical) Certificate No. 73954 JASON BELLEDIT 3-31-27 Expires 3-31-27

PREPARED BY: WRIGHT ENGINEERING
DESIGNED BY: JHB
DRAWN BY: XAG
CHECKED BY: JHB
SCALE: AS NOTED
DATE: NOV 2025
JOB NO.: B614

TITLE: ELECTRICAL SINGLE LINE DIAGRAM I

JOB: TOWN OF JEROME WASTEWATER TREATMENT PLANT
YAVAPAI CO. AZ

PREPARED BY:

PACE
Advanced Water Engineering
8723 E. Via de Commercio, Suite 104, Scottsdale, CA 85258
p. (408) 991-3595 | www.pacewater.com

SHEET
E2.1
73 OF 99 SHEETS

JOB NO. B614

ISSUED FOR BID

THESE DRAWINGS ARE THE PROPERTY OF P.A.C.E. AND SHALL NOT BE REPRODUCED IN ANY MANNER NOR BE USED FOR CONSTRUCTION UNLESS STAMPED "ISSUED FOR CONSTRUCTION".

H:\2025\2513-Jerome WW TP\2513-E Dwgs - Feb 03 - 1\y-yvada.ctb 11/4/25 4:58:48 PM

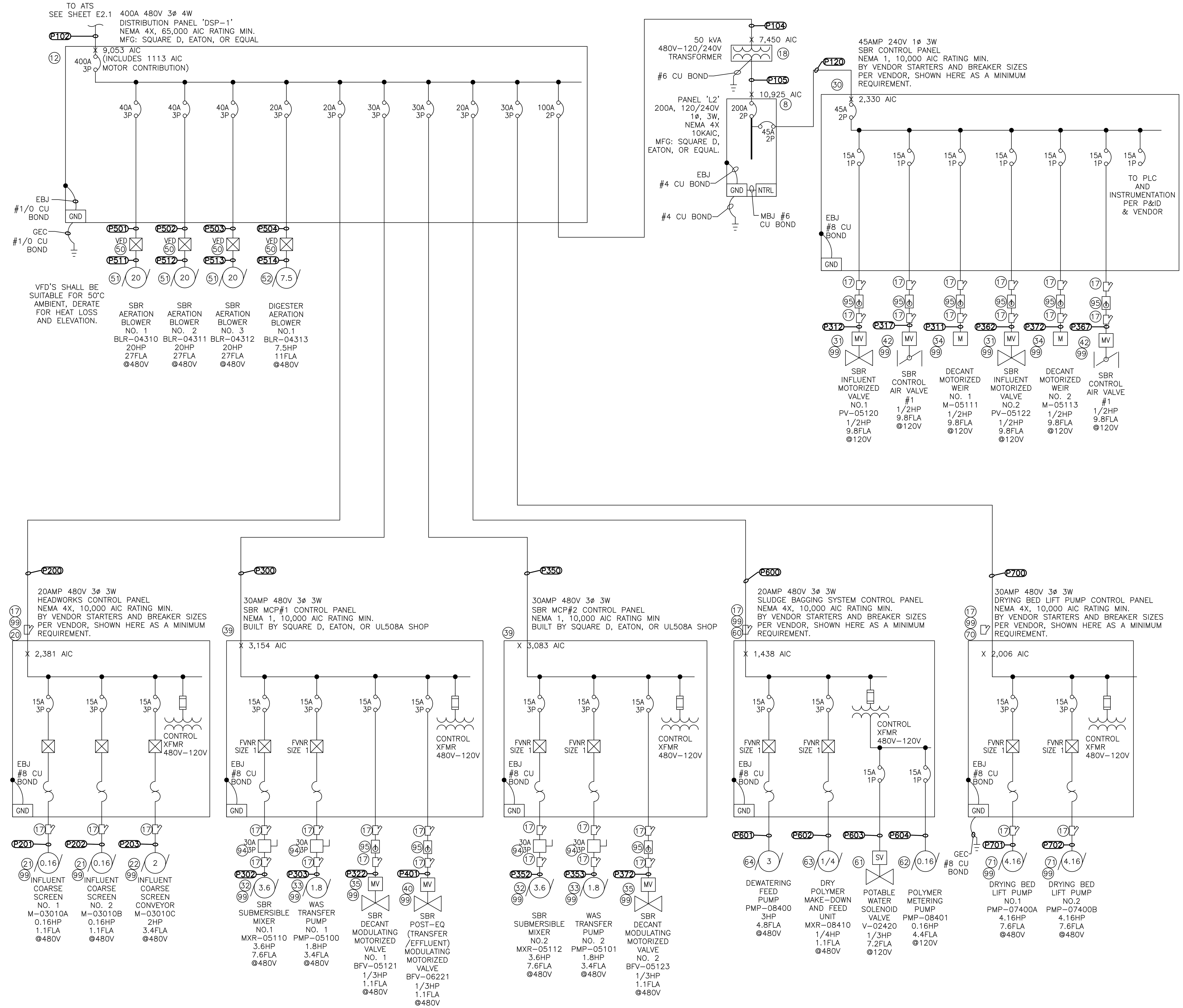

1B SINGLE LINE DIAGRAM
NO SCALE

CONSTRUCTION NOTES

(12) DISTRIBUTION PANEL DSP-1 400A 277/480V, 3ø, 4W, SEE DETAIL 2 ON SHEET E4.1.

(17) CLASSIFIED SEAL OFF LISTED FOR CLASS 1 DIV 1. LOCATE WITHIN 10 FEET OF CLASSIFIED AREA BOUNDARY. PVC COATED RMS EYS TYPE OR EQUIVALENT. SEAL SHALL HAVE SEALING COMPOUND CHICO, OR EQUAL.

(20) 20A HEADWORKS CONTROL PANEL, BY VENDOR CLASS 1 DIVISION 2 LISTED. ELECTRICAL CONTRACTOR SHALL MAKE ALL POWER AND CONTROL CONNECTIONS PER THESE PLANS AND SPECIFICATIONS AND THE MANUFACTURERS REQUIREMENTS. SEE DETAIL 1 ON SHEET E4.4.

(21) INFLUENT COARSE SCREEN MOTOR. ELECTRICAL CONTRACTOR SHALL MAKE ALL POWER AND CONTROL CONNECTIONS PER THESE PLANS AND SPECIFICATIONS AND THE MANUFACTURERS REQUIREMENTS.

(22) INFLUENT CONVEYOR MOTOR. ELECTRICAL CONTRACTOR SHALL MAKE ALL POWER AND CONTROL CONNECTIONS PER THESE PLANS AND SPECIFICATIONS AND THE MANUFACTURERS REQUIREMENTS.

(30) SBR PANEL BY VENDOR, ELECTRICAL CONTRACTOR SHALL MAKE ALL POWER AND CONTROL CONNECTIONS PER THESE PLANS AND SPECIFICATIONS AND THE MANUFACTURERS REQUIREMENTS.

(31) SBR INFLUENT VALVE. ELECTRICAL CONTRACTOR SHALL MAKE ALL POWER AND CONTROL CONNECTIONS PER THESE PLANS AND SPECIFICATIONS AND THE MANUFACTURERS REQUIREMENTS.

(32) SBR SUBMERSIBLE MIXER. ELECTRICAL CONTRACTOR SHALL MAKE ALL POWER AND CONTROL CONNECTIONS PER THESE PLANS AND SPECIFICATIONS AND THE MANUFACTURERS REQUIREMENTS.

(33) WAS TRANSFER PUMP. ELECTRICAL CONTRACTOR SHALL MAKE ALL POWER AND CONTROL CONNECTIONS PER THESE PLANS AND SPECIFICATIONS AND THE MANUFACTURERS REQUIREMENTS.

(34) DECANT MOTOR. ELECTRICAL CONTRACTOR SHALL MAKE ALL POWER AND CONTROL CONNECTIONS PER THESE PLANS AND SPECIFICATIONS AND THE MANUFACTURERS REQUIREMENTS.

(35) SBR DECANT VALVE. ELECTRICAL CONTRACTOR SHALL MAKE ALL POWER AND CONTROL CONNECTIONS PER THESE PLANS AND SPECIFICATIONS AND THE MANUFACTURERS REQUIREMENTS.

(39) SBR MOTOR CONTROL PANEL, PROVIDE AND INSTALL. ELECTRICAL CONTRACTOR SHALL MAKE ALL POWER AND CONTROL CONNECTIONS PER THESE PLANS AND SPECIFICATIONS AND THE MANUFACTURERS REQUIREMENTS.

(40) SBR EFFLUENT VALVE. ELECTRICAL CONTRACTOR SHALL MAKE ALL POWER AND CONTROL CONNECTIONS PER THESE PLANS AND SPECIFICATIONS AND THE MANUFACTURERS REQUIREMENTS.

(42) SBR AIR VALVE. ELECTRICAL CONTRACTOR SHALL MAKE ALL POWER AND CONTROL CONNECTIONS PER THESE PLANS AND SPECIFICATIONS AND THE MANUFACTURERS REQUIREMENTS.

(50) VARIABLE FREQUENCY DRIVE. ELECTRICAL CONTRACTOR SHALL MAKE ALL POWER AND CONTROL CONNECTIONS PER THESE PLANS AND SPECIFICATIONS AND THE MANUFACTURERS REQUIREMENTS.

(51) SBR AERATION BLOWER WITH INTEGRAL DISCONNECT. ELECTRICAL CONTRACTOR SHALL MAKE ALL POWER AND CONTROL CONNECTIONS PER THESE PLANS AND SPECIFICATIONS AND THE MANUFACTURERS REQUIREMENTS.

(52) DIGESTER AERATION BLOWER WITH INTEGRAL DISCONNECT. ELECTRICAL CONTRACTOR SHALL MAKE ALL POWER AND CONTROL CONNECTIONS PER THESE PLANS AND SPECIFICATIONS AND THE MANUFACTURERS REQUIREMENTS.

(60) 20A SLUDGE BAGGING SYSTEM CONTROL PANEL, BY VENDOR. ELECTRICAL CONTRACTOR SHALL MAKE ALL POWER AND CONTROL CONNECTIONS PER THESE PLANS AND SPECIFICATIONS AND THE MANUFACTURERS REQUIREMENTS.

(61) POTABLE WATER VALVE. ELECTRICAL CONTRACTOR SHALL MAKE ALL POWER AND CONTROL CONNECTIONS PER THESE PLANS AND SPECIFICATIONS AND THE MANUFACTURERS REQUIREMENTS.

(62) POLYMER METERING PUMP. ELECTRICAL CONTRACTOR SHALL MAKE ALL POWER AND CONTROL CONNECTIONS PER THESE PLANS AND SPECIFICATIONS AND THE MANUFACTURERS REQUIREMENTS.

(63) DRY POLYMER MIXER. ELECTRICAL CONTRACTOR SHALL MAKE ALL POWER AND CONTROL CONNECTIONS PER THESE PLANS AND SPECIFICATIONS AND THE MANUFACTURERS REQUIREMENTS.

(64) DEWATERING FEED PUMP. ELECTRICAL CONTRACTOR SHALL MAKE ALL POWER AND CONTROL CONNECTIONS PER THESE PLANS AND SPECIFICATIONS AND THE MANUFACTURERS REQUIREMENTS.

(70) 30A DRYING BED LIFT PUMP CONTROL PANEL, 480V, 3ø, 4W. ELECTRICAL CONTRACTOR SHALL MAKE ALL POWER AND CONTROL CONNECTIONS PER THESE PLANS AND SPECIFICATIONS AND THE MANUFACTURERS REQUIREMENTS. SEE DETAIL 1 ON SHEET E4.4.

(71) DRYING BED LIFT PUMP. ELECTRICAL CONTRACTOR SHALL MAKE ALL POWER AND CONTROL CONNECTIONS PER THESE PLANS AND SPECIFICATIONS AND THE MANUFACTURERS REQUIREMENTS. SEE DETAIL 4 ON SHEET E4.5.

(94) NON-FUSED DISCONNECT, NEMA 4X FOR OUTDOOR AND CLASS 1 DIV 1 WITHIN CLASSIFIED BOUNDARY. IF LOCATION IS ABOVE BOUNDARY, NEMA 4X WITH CLASSIFIED SEAL OFFS IS ACCEPTABLE. PROVIDE PERMANENT LABEL SUITABLE FOR CORROSIVE ENVIRONMENTS AND UV RESISTANT. MATCH LABEL NAMING CONVENTION WITH P&ID. SEE DETAIL 5 ON SHEET E4.2 & SEE DETAIL 1 ON SHEET E4.4.

(95) ROTARY TYPE DISCONNECT, NEMA 4X FOR OUTDOOR AND CLASS 1 DIV 1 WITHIN CLASSIFIED BOUNDARY. IF LOCATION IS ABOVE BOUNDARY, NEMA 4X WITH CLASSIFIED SEAL OFFS IS ACCEPTABLE. PROVIDE PERMANENT LABEL SUITABLE FOR CORROSIVE ENVIRONMENTS AND UV RESISTANT. MATCH LABEL NAMING CONVENTION WITH P&ID. SEE DETAIL 5 ON SHEET E4.2 & SEE DETAIL 1 ON SHEET E4.4.

(99) CLASSIFIED AREA VERIFY BOUNDARY WITH THE NFPA. INSTALL ANY PANELS, DISCONNECTS, SPLICES, ARC MAKING EQUIPMENT OUT OF THE BOUNDARY, WHERE NOT POSSIBLE THEN INSTALL CLASS 1 DIV 1 LISTED EQUIPMENT. ALL CONDUIT WITHIN BOUNDARY SHALL BE CLASS 1 DIV 1 OR 2 RATED AS REQUIRED BY THE BOUNDARY. USE PVC COATED THREADED RMC CONDUIT, INSTALL STAINLESS STEEL 316 ENCLOSURES, HARDWARE AND EQUIPMENT WITHIN 10 FEET OF THE BOUNDARY. INSTALL CLASSIFIED SEAL OFFS WITHIN 10 FEET OF THE BOUNDARY, AT A PANEL OR JUNCTION BOX IS PREFERRED.

ISSUED FOR BID

WRIGHT engineering corporation
ELECTRICAL ENGINEERING AND DESIGN
165 EAST CHILTON DRIVE
CHANDLER, ARIZONA 85225
PHONE: 480.497.5829
FAX: 480.497.5807
www.wrightengineering.us
Wright Project # 23319

CALL TWO WORKING DAYS BEFORE YOU DIG
602-263-1100
1-800-STAKE-IT
(OUTSIDE MARICOPA COUNTY)

NO	BY	DATE	REVISIONS	DATE	APP.

Registered Professional Engineer (Electrical) Certificate No. 73954 JACOB BIELEFELDT Date Signed 11-24-2025 Expires 9-30-27

PREPARED BY: WRIGHT ENGINEERING
DESIGNED BY: JHB
DRAWN BY: XAG
CHECKED BY: JHB SCALE: AS NOTED
DATE NOV 2025
JOB NO. B614

TITLE
ELECTRICAL
SINGLE LINE DIAGRAM II

JOB
TOWN OF JEROME
WASTEWATER TREATMENT PLANT
YAVAPAI CO. AZ

PREPARED BY:
PACE Advanced Water Engineering
8723 E. VIA de COMMERCIO, SUITE A-204 | SCOTTSDALE, CA 85258
P: (408) 991-3595 | www.pacewater.com

THESE DRAWINGS ARE THE PROPERTY OF P.A.C.E. AND SHALL NOT BE REPRODUCED IN ANY MANNER NOR BE USED FOR CONSTRUCTION UNLESS STAMPED "ISSUED FOR CONSTRUCTION".

H:\2023\23319-Jerome WWTP\23319-E.dwg - Tab: E2.2 - by jacobb on 11/24/25 at 6:56:46 PM

SES LOAD CALCULATION SUMMARY

LOAD DESCRIPTION	LOAD	STANDBY
MCC–A	256.6	256.6
PANEL L1	5.0	0
TOTAL AMPS AT 480V 3ø	261.6	256.6
TOTAL KVA AT 480V 3ø	217.5	217.5

MCC LOAD CALCULATION SUMMARY

LOAD DESCRIPTION	LOAD	STANDBY
SBR AERATION BLOWER NO. 1 BLR–04310 (20HP)	27.0	27.0
SBR AERATION BLOWER NO. 2 BLR–04311 (20HP)	27.0	27.0
SBR AERATION BLOWER NO. 3 BLR–04312 (20HP)	27.0	27.0
DIGESTION AERATION BLOWER NO. 1 BLR–04313 (7.5HP)	11.0	11.0
SBR SUBMERSIBLE MIXER NO. 1 MXR–05110 (3.6HP)	7.6	7.6
SBR SUBMERSIBLE MIXER NO. 2 MXR–05112 (3.6HP)	7.6	7.6
WAS TRANSFER PUMP NO. 1 PMP–05100 (1.8HP)	3.4	3.4
WAS TRANSFER PUMP NO. 2 PMP–05101 (1.8HP)	3.4	3.4
SBR DECANT MODULATING VALVE NO. 1 BFV–05121 (1/3HP)	1.1	1.1
SBR DECANT VALVE NO. 2 BFV–05123 (1/3HP)	1.1	1.1
SBR POST–EQ VALVE BFV–05121 (1/3HP)	1.1	1.1
DRYING BED LIFT PUMP CONTROL PANEL	19.1	19.1
HEADWORKS CONTROL PANEL	5.6	5.6
SLUDGE BAGGING SYSTEM CONTROL PANEL	12.1	12.1
PANEL 'L2'	95.7	95.7
25% OF THE LARGEST MOTOR	**6.8**	**6.8**
TOTAL AMPS / 480V 3ø	256.6	256.6
TOTAL KVA AT / ø	213.3	213.3

DRYING BED LIFT PUMP CONTROL PANEL LOAD CALCULATION SUMMARY

LOAD DESCRIPTION	LOAD	STANDBY
DRYING BED LIFT PUMP NO. 1 PMP–07400A (4.16HP)	7.6	7.6
DRYING BED LIFT PUMP NO. 2 PMP–07400B (4.16HP)	7.6	7.6
CONTROL	2.0	2.0
25% OF THE LARGEST MOTOR	1.9	1.9
TOTAL AMPS / 480V 3ø	19.1	19.1
TOTAL KVA AT / ø	15.9	15.9

HEADWORKS CONTROL PANEL LOAD CALCULATION SUMMARY

LOAD DESCRIPTION	LOAD	STANDBY
INFLUENT COARSE SCREEN NO. 1 M–03010A (.16HP)	1.1	1.1
INFLUENT COARSE SCREEN NO. 2 M–03010B (.16HP)	1.1	1.1
INFLUENT COARSE SCREEN CONVERYOR M–03010C (1/2HP)	1.1	1.1
CONTROL	2.0	2.0
25% OF THE LARGEST MOTOR	**0.3**	**0.3**
TOTAL AMPS / 480V 3ø	5.6	5.6
TOTAL KVA AT / ø	4.6	4.6

SLUDGE BAGGING SYSTEM CONTROL PANEL LOAD CALCULATION SUMMARY

LOAD DESCRIPTION	LOAD	STANDBY
DEWATERING FEED PUMP PMP–08400 (3HP)	4.8	4.8
DRY POLYMER MAKE–DOWN AND FEED UNIT MXR–08410 (1/4HP)	1.1	1.1
CONTROL	5.0	5.0
25% OF THE LARGEST MOTOR	**1.2**	**1.2**
TOTAL AMPS / 480V 3ø	12.1	12.1
TOTAL KVA AT / ø	10.1	10.1

SBR CONTROL PANEL LOAD CALCULATION SUMMARY

LOAD DESCRIPTION	LOAD Aø	LOAD Bø	STANDBY
SBR INFLUENT VALVE NO. 1 PV–05120 (1/2HP)	9.8		9.8
SBR INFLUENT VALVE NO. 2 PV–05122 (1/2HP)		9.8	9.8
DECANT MOTOR NO. 1 M–05111 (1/2HP)	9.8		9.8
DECANT MOTOR NO. 2 M–05113 (1/2HP)		9.8	9.8
SBR AIR VALVE #1 (1/2 HP)	9.8		9.8
SBR AIR VALVE #2 (1/2 HP)		9.8	9.8
CONTROL	2.0		2.0
25% OF THE LARGEST MOTOR	**2.5**		**2.5**
TOTAL AMPS / 120V 1ø	33.9	29.4	33.9
TOTAL KVA AT / ø	4.1	3.5	4.1

PANEL NAME: L1			120/240V, 1ø, 3W				60A MAIN BKR		
LOCATION: SEE SITE PLAN			TYPE: PLUG–IN				PEDESTAL MTD., NEMA 4X		
CKT NO.	BKR SIZE	DESCRIPTION	LOAD	Aø	Bø	LOAD	DESCRIPTION	BKR SIZE	CKT NO.
1	20/	OVERFLOW LIFT PUMP MOTOR CONTROL PANEL	1200	1200		0	SPARE	20/1	2
3	/2		1200		1200	0	SPARE	20/1	4
5	20/1	SPARE	0	0		0	SPARE	20/1	6
CODE TOTAL VA/ø				1200	1200	*INDICATES LOAD @ 125%			
CODE TOTAL AMPS/ø				10.0	10.0	22,000 AIC BREAKERS			

PANEL NAME: L2			120/240V, 1ø, 3W				200A MAIN BKR		
LOCATION: BUILDING			TYPE: PLUG–IN				WALL MTD., NEMA 4X		
CKT NO.	BKR SIZE	DESCRIPTION	LOAD	Aø	Bø	LOAD	DESCRIPTION	BKR SIZE	CKT NO.
1	20/1	*BUILDING EXTERIOR LIGHTS	235	435		200	FLOW METER	20/1	2
3	20/1	*LAB LIGHTS + BLOWER ROOM + EM LIGHT	963		5031	4068	SBR CONTROL PANEL	45/	4
5	20/1	BLOWER ROOM + EXTERIOR RECEPTACLE	900	4428		3528		/2	6
7	20/1	*RESTROOM LIGHTS + EXHAUST FAN + RECEPTACLE	420		1620	1200	GENERATOR ON BOARD PANEL	60/	8
9	20/1	LAB RECEPTACLES 3	1080	2280		1200		/2	10
11	20/1	LAB RECEPTACLES 4	1440		7940	6500	LAB TANKLESS WATER HEATER	60/	12
13	20/	*SBR AREA LIGHTING*	302	6802		6500		/2	14
15	/2		302		6802	6500	RR TANKLESS WATER HEATER	60/	16
17	20/	A/C UNIT OUTDOOR	1759	8259		6500		/2	18
19	/2		1759		1759	0	BUSSED SPACE		20
21	20/1	A/C UNIT INDOOR	600	600		0	BUSSED SPACE		22
23		BUSSED SPACE	0		0	0	BUSSED SPACE		24
25		BUSSED SPACE	0	0		0	BUSSED SPACE		26
27		BUSSED SPACE	0		0	0	BUSSED SPACE		28
29		BUSSED SPACE	0	0		0	BUSSED SPACE		30
31		BUSSED SPACE	0		0	0	BUSSED SPACE		32
33		BUSSED SPACE	0	0		0	BUSSED SPACE		34
35		BUSSED SPACE	0		0	0	BUSSED SPACE		36
37		BUSSED SPACE	0	0		0	BUSSED SPACE		38
39		BUSSED SPACE	0		0	0	BUSSED SPACE		40
41		BUSSED SPACE	0	0		0	BUSSED SPACE		42
CODE TOTAL VA/ø				22804	23152	*INDICATES LOAD @ 125%			
CODE TOTAL AMPS/ø				190.0	192.9	22,000 AIC BREAKERS			

WRIGHT engineering corporation
ELECTRICAL ENGINEERING AND DESIGN
165 EAST CHILTON DRIVE
CHANDLER, ARIZONA 85225
PHONE: 480.497.5829
FAX: 480.497.5807
www.wrightengineering.us

Wright Project # 23319

CALL TWO WORKING DAYS BEFORE YOU DIG
602-263-1100
1-800-STAKE-IT
(OUTSIDE MARICOPA COUNTY)

NO	BY	DATE	REVISIONS	DATE	APP.

Registered Professional Engineer (Electrical) Certificate No. 73954 JAMES BILLEDT 3-31-27 Expires 9-30-27

PREPARED BY: WRIGHT ENGINEERING
DESIGNED BY: JHB
DRAWN BY: XAG
CHECKED BY: JHB
SCALE: AS NOTED
DATE: NOV 2025
JOB NO. B614

THESE DRAWINGS ARE THE PROPERTY OF P.A.C.E. AND SHALL NOT BE REPRODUCED IN ANY MANNER NOR BE USED FOR CONSTRUCTION UNLESS STAMPED "ISSUED FOR CONSTRUCTION".

TITLE
ELECTRICAL
LOAD CALCULATIONS

JOB
TOWN OF JEROME
WASTEWATER
TREATMENT PLANT
YAVAPAI CO. AZ

ISSUED FOR BID

PREPARED BY:

PACE
Advanced Water Engineering
8723 E. VIA de COMMERCIO, 1ST FLR. SCOTTSDALE, CA 85258
P: (480) 991-3595 | www.pacewater.com

SHEET
E2.3
75 OF 99 SHEETS

JOB NO. B614

N:\2025\2025-Pace\Jerome WWTP\2025 Elec Eng\ - Title E2.3 - by pseals on 11/05/25 at 9:46 PM

CONDUIT AND WIRE SCHEDULE FOR POWER

CONDUIT NO.	CONDUIT SIZE	WIRE POWER	WIRE GROUND	FROM	TO	REMARKS
POWER COMPANY						
P000	PER POWER COMPANY (APS) PLANS AND SPECIFICATIONS			POWER COMPANY TRANSFORMER	SES	
MAIN POWER						
P100	(2) 3.5"	4-#350KCMIL (2) PARALLEL	1-#3/0 (2) PARALLEL	SES	AUTOMATIC TRANSFER SWITCH	(2) PARALLEL CONDUCTORS TOTAL DISTANCE 1085'
P101	(2)3"	4-#3/0 (2) PARALLEL	1-#2 (2) PARALLEL	GENERATOR	AUTOMATIC TRANSFER SWITCH	(2) PARALLEL CONDUCTORS
P102	(2)3"	4-#3/0 (2) PARALLEL	1-#2 (2) PARALLEL	AUTOMATIC TRANSFER SWITCH	DSP-1	(2) PARALLEL CONDUCTORS
P103	1"	3-#10	1-#10	PANEL 'L2'	GENERATOR'S ON-BOARD PANEL	
P104	1.5"	2-#2	1-#8	DISTRIBUTION PANEL DSP-1	50KVA TRANSFORMER T2	
P105	2"	3-#3/0	1-#6	50KVA TRANSFORMER T2	PANEL 'L2'	
P120	1"	3-#6	1-#10	PANEL 'L2'	SBR PANEL	
P121	1"	2-#12	1-#12	PANEL 'L2'	AREA LIGHT	CKT. L2-7
P122	1"	2-#12	1-#12	PANEL 'L2'	BUILDING MISC.	SEE SITE FOR CKT.
P123	1"	2-#12	1-#12	PANEL 'L2'	SITE RECEPTACLE	CKT. L2-9
P131	1"	PULL ROPE		SEE SITE PLAN		SPARE
P132	2"	PULL ROPE		SEE SITE PLAN		SPARE
P133	3.5"	PULL ROPE		SEE SITE PLAN		SPARE
HEADWORKS STATION						
P200	1"	3-#10	1-#10	DISTRIBUTION PANEL DSP-1	HEADWORKS CONTROL PANEL	
P201	1"	3-#12	1-#12	HEADWORKS STATION CONTROL PANEL	INFLUENT COARSE SCREEN	M-03010A
P202	1"	3-#12	1-#12	HEADWORKS STATION CONTROL PANEL	INFLUENT COARSE SCREEN	M-03010B
P203	1"	3-#12	1-#12	HEADWORKS STATION CONTROL PANEL	INFLUENT COARSE SCREEN CONVEYOR	M-03010C
P204	1"	2-#12	1-#12	HEADWORKS STATION CONTROL PANEL	SOLENOID VALVE	V-02020

CONDUIT AND WIRE SCHEDULE FOR POWER

CONDUIT NO.	CONDUIT SIZE	WIRE POWER	WIRE GROUND	FROM	TO	REMARKS
SEQUENCING BATCH REACTOR						
P300	1"	3-#10	1-#10	DISTRIBUTION PANEL DSP-1	MCP#1	
P301A	1"	3-#12	1-#12	MCP#1	J-BOX P1	MXR-05110
		3-#12	1-#12			PMP-05100
		3-#12	1-#12			BFV-05121
P301B	1"	2-#12	1-#12	SBR CONTROL PANEL		M-05111
		2-#12	1-#12			PV-05120
		2-#12	1-#12			SBR AIR VALVE #1
P302	1"	3-#12	1-#12	J-BOX P1	SBR MIXER #1	MXR-05110
P303	1"	3-#12	1-#12		WAS TRANSFER PUMP #1	PMP-05100
P322	1"	3-#12	1-#12		DECANTER VALVE #1	BFV-05121
P311	1"	2-#12	1-#12		DECANTER #1	M-05111
P312	1"	2-#12	1-#12		SBR INFLUENT VALVE #1	PV-05120
P317	1"	2-#12	1-#12		SBR AIR VALVE #1	
P350	1"	3-#12	1-#12	DISTRIBUTION PANEL DSP-1	MCP#2	
P351A	1"	3-#12	1-#12	MCP#2	J-BOX P2	MXR-05112
		3-#12	1-#12			PMP-05101
		3-#12	1-#12			BFV-05123
P351B	1"	2-#12	1-#12	SBR CONTROL PANEL		M-05113
		2-#12	1-#12			PV-05122
		2-#12	1-#12			SBR AIR VALVE #2
P352	1"	3-#12	1-#12	J-BOX P2	SBR MIXER #2	MXR-05112
P353	1"	3-#12	1-#12		WAS TRANSFER PUMP #2	PMP-05101
P372	1"	3-#12	1-#12		DECANTER VALVE #2	BFV-05123
P361	1"	2-#12	1-#12		DECANTER #2	M-05113
P362	1"	2-#12	1-#12		SBR INFLUENT VALVE #2	PV-05122
P367	1"	2-#12	1-#12		SBR AIR VALVE #2	

CONDUIT AND WIRE SCHEDULE FOR POWER

CONDUIT NO.	CONDUIT SIZE	WIRE POWER	WIRE GROUND	FROM	TO	REMARKS
CHLORINE CONTACT AND DIGESTER						
P400	3"	2-#12	1-#12	PANEL 'L2'	FLOW METER	FM-06240
P401	3"	2-#12	1-#12	DISTRIBUTION PANEL DSP-1	BUTTERFLY VALVE	BFV-06221
BLOWER ROOM						
P501	1"	3-#8	1-#8	DISTRIBUTION PANEL DSP-1	AERATION BLOWER VFD #1	BLR-04310
P511	1"	3-#8	1-#8	AERATION BLOWER VFD #1	BLR-04310	
P502	1"	3-#8	1-#8	DISTRIBUTION PANEL DSP-1	AERATION BLOWER VFD #2	BLR-04311
P512	1"	3-#8	1-#8	AERATION BLOWER VFD #2	BLR-04311	
P503	1"	3-#8	1-#8	DISTRIBUTION PANEL DSP-1	AERATION BLOWER VFD #3	BLR-04312
P513	1"	3-#8	1-#8	AERATION BLOWER VFD #3	BLR-04312	
P504	1"	3-#12	1-#12	DISTRIBUTION PANEL DSP-1	DIGESTION BLOWER VFD #4	BLR-04313
P514	1"	3-#12	1-#12	DIGESTION BLOWER VFD #4	BLR-04313	
DEWATERING						
P600	1"	3-#10	1-#10	DISTRIBUTION PANEL DSP-1	SLUDGE BAGGING SYSTEM CONTROL PANEL	
P601	1"	3-#12	1-#12	SLUDGE BAGGING SYSTEM CONTROL PANEL	DEWATERING FEED PUMP	PMP-08400
P602	1"	3-#12	1-#12	SLUDGE BAGGING SYSTEM CONTROL PANEL	DRY POLYMER MIXING UNIT	MXR-08410
P603	1"	2-#12	1-#12	SLUDGE BAGGING SYSTEM CONTROL PANEL	POTABLE WATER VALVE	V-02420
P604	1"	2-#12	1-#12	SLUDGE BAGGING SYSTEM CONTROL PANEL	POLYMER PUMP	PMP-08401
DRYING BED LIFT STATION						
P700	2"	3-#8	1-#8	DISTRIBUTION PANEL DSP-1	DRYING BED LIFT STATION CONTROL PANEL	TOTAL DISTANCE 225'
P701	1"	3-#12	1-#12	DRYING BED LIFT STATION CONTROL PANEL	DRYING BED LIFT PUMP	PMP-07400A
P702	1"	3-#12	1-#12	DRYING BED LIFT STATION CONTROL PANEL	DRYING BED LIFT PUMP	PMP-07400B
P703	1"	3-#12	1-#12	DRYING BED LIFT STATION CONTROL PANEL	RECEPTACLE & AREA LIGHT	
OVERFLOW LIFT STATION						
P800	1"	2-#10	1-#10	SES	PANEL 'L1'	
P801	1"	2-#12	1-#12	PANEL 'L1'	OVERFLOW CONTROL PANEL	
P802	1"	2-#12	1-#12	OVERFLOW CONTROL PANEL	OVERFLOW PUMP	PMP-07401

NO	BY	DATE	REVISIONS	DATE	APP.

Registered Professional Engineer (Electrical) Certificate No. 73954 JAMES RILEY TOOT Date Signed 9-30-25 Expires 9-30-27

PREPARED BY: WRIGHT ENGINEERING
DESIGNED BY: JHB
DRAWN BY: XAG
CHECKED BY: JHB
SCALE: AS NOTED
DATE: NOV 2025
JOB NO.: B614

THESE DRAWINGS ARE THE PROPERTY OF P.A.C.E. AND SHALL NOT BE REPRODUCED IN ANY MANNER NOR BE USED FOR CONSTRUCTION UNLESS STAMPED "ISSUED FOR CONSTRUCTION".

TITLE: ELECTRICAL CONDUIT + WIRE TABLES I

JOB: TOWN OF JEROME WASTEWATER TREATMENT PLANT
YAVAPAI CO. AZ

PREPARED BY:
PACE
Advanced Water Engineering
8723 E. Via de Commercio, Suite 104, Scottsdale, CA 85258
p. (408) 991-3595 | www.pacewater.com

SHEET
E2.4
76 OF 99 SHEETS

JOB NO. B614

ISSUED FOR BID

WRIGHT engineering corporation
ELECTRICAL ENGINEERING AND DESIGN
165 EAST CHILTON DRIVE
CHANDLER, ARIZONA 85225
PHONE: 480.497.5829
FAX: 480.497.5807
www.wrightengineering.us
Wright Project # 23319

CALL TWO WORKING DAYS BEFORE YOU DIG
602-263-1100
1-800-STAKE-IT
(OUTSIDE MARICOPA COUNTY)

H:\2025\23319-Jerome WWTP\25\E2.4.dwg, 11x17, 1:1, by jhubbs on 11/04/25 at 2:56:48 PM

CONDUIT AND WIRE SCHEDULE FOR CONTROL

CONDUIT NO.	CONDUIT SIZE	POWER	GROUND	CONTROL	FROM	TO	REMARKS
GENERATOR/SES							
C101	3/4"		#14	(2)#14	AUTOMATIC TRANSFER SWITCH	GENERATOR	
C102	3/4"		#14	(2)#14	SBR CONTROL PANEL	AUTOMATIC TRANSFER SWITCH	
C103	3/4"		#14	(6)#14	SBR CONTROL PANEL	GENERATOR	
C104	3/4"		#14	(2)#14	GENERATOR	E-STOP	EST-01000
C105	2"	PULL ROPE			SBR CONTROL PANEL	MCC	
C106	1"	PULL ROPE			SEE SITE PLAN		SPARE
HEADWORKS STATION							
C200	3/4"		#14	(2)#14	SBR CONTROL PANEL	HEADWORKS CONTROL PANEL	
C201	3/4"		#14	(2)#14	HEADWORKS CONTROL PANEL	INFLUENT COARSE SCREEN	EST-03010A
C202	3/4"		#14	(2)#14	HEADWORKS CONTROL PANEL	INFLUENT COARSE SCREEN	EST-03010B
C203	3/4"		#14	(2)#14	HEADWORKS CONTROL PANEL	INFLUENT COARSE SCREEN CONVEYOR	EST-03010C
C204	3/4"		#14	(6)#14	HEADWORKS CONTROL PANEL	V-02020	ZSO-03023,ZSC-03023, HS-03023
C205	1.5"			(4) FACTORY CABLE	HEADWORKS CONTROL PANEL	CONDUIT BODY	LE-03031
C206	3/4"			FACTORY CABLE	HEADWORKS CONTROL PANEL	LEVEL SENSOR	LE-03031
C207	3/4"			FACTORY CABLE	HEADWORKS CONTROL PANEL	LEVEL SENSOR	LE-03032
C208	3/4"			FACTORY CABLE	HEADWORKS CONTROL PANEL	LEVEL SENSOR	LE-03033
C209	3/4"			FACTORY CABLE	HEADWORKS CONTROL PANEL	LEVEL SENSOR	LE-03034

TP=TWISTED SHIELDED PAIR

CONDUIT AND WIRE SCHEDULE FOR CONTROL

CONDUIT NO.	CONDUIT SIZE	POWER	GROUND	CONTROL	FROM	TO	REMARKS
SEQUENCING BATCH REACTOR							
C300	1"		#14	(6)#14	SBR CONTROL PANEL	MCP#1	MXR-05110
				(6)#14			PMP-05100
C350	1"		#14	(6)#14		MCP#2	MXR-05112
				(6)#14			PMP-05101
C301	1"		#14	(4)#14	MCP#1	J-BOX C1	ME & TE-05110
				(4)#14			ME & TE-05100
C351	1"		#14	(4)#14	MCP#2	J-BOX C2	ME & TE-05112
				(4)#14			ME & TE-05101
C302	1"			FACTORY CABLE	J-BOX C1	MXR-05110	ME & TE-05110
C303	1"			FACTORY CABLE		PMP-05100	ME & TE-05100
C352	1"			FACTORY CABLE	J-BOX C2	MXR-05112	ME & TE-05112
C353	1"			FACTORY CABLE		PMP-05101	ME & TE-05101
C310	1.5"		#14	(8)#14	SBR CONTROL PANEL	J-BOX C1	M-05111
				(8)#14			PV-05120
				(2)#14			LSH-05131A
				(2)#14			LSL-05131B
				(4)#14			SBR AIR VALVE #1
C360	1.5"		#14	(8)#14		J-BOX C2	M-05113
				(8)#14			PV-05122
				(2)#14			LSH-05133A
				(2)#14			LSL-05133B
				(4)#14			SBR AIR VALVE #2
C311	1"			FACTORY CABLE	J-BOX C1	DECANTER #1	M-05111
C312	1"			(8)#14		SBR INFLUENT VALVE #1	PV-05120
C313				FACTORY CABLE		HIGH LEVEL FLOAT #3	LSH-05231
C314	1"			(2) FACTORY CABLE		CONDUIT BODY 1	LSH-05131A, LSH-05131B
C315	3/4"			FACTORY CABLE	CONDUIT BODY 1	HIGH LEVEL FLOAT #1	LSH-05131A
C316	3/4"			FACTORY CABLE		LOW LEVEL FLOAT #1	LSL-05131B
C317	3/4"			(4)#14	J-BOX C1	SBR AIR VALVE #1	
C361	1"			FACTORY CABLE	J-BOX C2	DECANTER #2	M-05113
C362	1"			(8)#14		SBR INFLUENT VALVE #2	PV-05122
C363				FACTORY CABLE		HIGH LEVEL FLOAT #4	LSH-05233
C364	1"			(2) FACTORY CABLE		CONDUIT BODY 2	LSH-05133A, LSH-05133B
C365	3/4"			FACTORY CABLE	CONDUIT BODY 2	HIGH LEVEL FLOAT #2	LSH-05133A
C366	3/4"			FACTORY CABLE		LOW LEVEL FLOAT #2	LSL-05133B
C367	3/4"			(4)#14	J-BOX C2	SBR AIR VALVE #2	
C320	1"			#16 TP	SBR CONTROL PANEL	J-BOX C1	LE-05130
				#16 TP			BFV-05121
				#16 TP			LE-05230
				#16 TP			AT-05160A
C370	1"			#16 TP	SBR CONTROL PANEL	J-BOX C2	LE-05132
				#16 TP			BFV-05123
				#16 TP			LE-05232
				#16 TP			AT-05161A
C321	3/4"			FACTORY CABLE	J-BOX C1	LEVEL SENSOR #1	LE-05130
C322	3/4"			#16 TP		DECANTER VALVE	BFV-05121
C323				FACTORY CABLE		LEVEL SENSOR #3	LE-05230
C324	3/4"			#16 TP		D.O. ANALYZER	AT-05160A
C325				FACTORY CABLE	D.O. ANALYZER	D.O. SENSOR	AE-05160B
C371	3/4"			FACTORY CABLE	J-BOX C2	LEVEL SENSOR #2	LE-05132
C372	3/4"			#16 TP		DECANTER VALVE	BFV-05123
C373				FACTORY CABLE		LEVEL SENSOR #4	LE-05232
C374	3/4"			#16 TP		D.O. ANALYZER	AT-05161A
C375				FACTORY CABLE	D.O. ANALYZER	D.O. SENSOR	AE-05161B

TP=TWISTED SHIELDED PAIR

CONDUIT AND WIRE SCHEDULE FOR CONTROL

CONDUIT NO.	CONDUIT SIZE	POWER	GROUND	CONTROL	FROM	TO	REMARKS
CHLORINE CONTACT							
C400	3/4"			#16TP	SBR CONTROL PANEL	FLOW METER	FM-06240 CHLORINE CONTACT
C401	1"			(2)#16TP	SBR CONTROL PANEL	V-02420	ZSO-06221, ZSC-06221, HS-06221 CHLORINE CONTACT
BLOWER ROOM							
C501			#14	(4)#14, (2)#16TP, CAT6	SBR CONTROL PANEL	BLOWER VFD BLR-04310	
C502			#14	(4)#14, (2)#16TP, CAT6		BLOWER VFD BLR-04311	
C503			#14	(4)#14, (2)#16TP, CAT6		BLOWER VFD BLR-04312	
C504			#14	(4)#14, (2)#16TP, CAT6		BLOWER VFD BLR-04313	
C511	3/4"		#14	(2)#14	BLOWER VFD BLR-04310	MOTOR RTD	TS-04310
C512	3/4"		#14	(2)#14	BLOWER VFD BLR-04311	MOTOR RTD	TS-04311
C513	3/4"		#14	(2)#14	BLOWER VFD BLR-04312	MOTOR RTD	TS-04312
C514	3/4"		#14	(2)#14	BLOWER VFD BLR-04313	MOTOR RTD	TS-04313
C520	1"		#14	(16)#14	SBR CONTROL PANEL	J-BOX	TT-04310, TT-04311, TT-04312, TT-04313
C530	1"			(4)#16TP			PT-04310, PT-04311, PT-04312, PT-04313
C521	3/4"		#14	(2)#14	J-BOX	THERMOSTAT AIR LINE BLOWER BLR-04310	TT-04310
C522	3/4"		#14	(2)#14		THERMOSTAT AIR LINE BLOWER BLR-04311	TT-04311
C523	3/4"		#14	(2)#14		THERMOSTAT AIR LINE BLOWER BLR-04312	TT-04312
C524	3/4"		#14	(2)#14		THERMOSTAT AIR LINE BLOWER BLR-04313	TT-04313
C531	3/4"			#16TP	J-BOX	PRESSURE TRANSDUCER AIR LINE BLOWER BLR-04310	PT-04310, PT-04311, PT-04312, PT-04313
C532	3/4"			#16TP		PRESSURE TRANSDUCER AIR LINE BLOWER BLR-04311	PT-04310, PT-04311, PT-04312, PT-04313
C533	3/4"			#16TP		PRESSURE TRANSDUCER AIR LINE BLOWER BLR-04312	PT-04310, PT-04311, PT-04312, PT-04313
C534	3/4"			#16TP		PRESSURE TRANSDUCER AIR LINE BLOWER BLR-04313	PT-04310, PT-04311, PT-04312, PT-04313
DEWATERING							
C600	1"		#14	(4)#14	SBR CONTROL PANEL	SLUDGE BAGGING SYSTEM CONTROL PANEL	
C601	3/4"		#14	(2)#14	SLUDGE BAGGING SYSTEM CONTROL PANEL	DEWATERING PUMP	PMP-08400, VERIFY CABLE TYPE WITH VENDOR
C602	3/4"		#14	(2)#14	SLUDGE BAGGING SYSTEM CONTROL PANEL	DRY POLYMER MIXING UNIT	MXR-08410, VERIFY CABLE TYPE WITH VENDOR
C603	3/4"		#14	(2)#14	SLUDGE BAGGING SYSTEM CONTROL PANEL	INFLUENT PLUG VALVE	V-02420, VERIFY CABLE TYPE WITH VENDOR
C604	3/4"		#14	(2)#14	SLUDGE BAGGING SYSTEM CONTROL PANEL	POLYMER PUMP	PMP-08401, VERIFY CABLE TYPE WITH VENDOR
DRYING BED LIFT STATION							
C700	1"		#14	(4)#14	SBR CONTROL PANEL	DRYING BED LIFT STATION CONTROL PANEL	
C701	1"		FACTORY CABLE		DRYING BED LIFT STATION CONTROL PANEL	PMP-07400A	
C702	1"		FACTORY CABLE		DRYING BED LIFT STATION CONTROL PANEL	PMP-07400B	
C706	1"		(3) FACTORY CABLE		DRYING BED LIFT STATION CONTROL PANEL	LEVEL FLOATS	LSHH-07430A, LSH-07430B, LSL-07430C
OVERFLOW LIFT STATION							
C801	1"		#14	(4)#14	SBR CONTROL PANEL	DRYING BED LIFT STATION CONTROL PANEL	
C802	1"		FACTORY CABLE		DRYING BED LIFT STATION CONTROL PANEL	PMP-07401	
C803	1"		(2) FACTORY CABLE		DRYING BED LIFT STATION CONTROL PANEL	LEVEL FLOATS	LSHH-07431A, LSL-07431B

TP=TWISTED SHIELDED PAIR

NO	BY	DATE	REVISIONS	DATE	APP.

Registered Professional Engineer (Electrical) Certificate No. 73954 JASON BILLETDEAUX 09-30-27 Expires 9-30-27

PREPARED BY: WRIGHT ENGINEERING
DESIGNED BY: JHB
DRAWN BY: XAG
CHECKED BY: JHB
SCALE: AS NOTED
DATE: NOV 2025
JOB NO. B614

THESE DRAWINGS ARE THE PROPERTY OF P.A.C.E. AND SHALL NOT BE REPRODUCED IN ANY MANNER NOR BE USED FOR CONSTRUCTION UNLESS STAMPED "ISSUED FOR CONSTRUCTION".

TITLE: ELECTRICAL CONDUIT + WIRE TABLES II

JOB: TOWN OF JEROME WASTEWATER TREATMENT PLANT YAVAPAI CO. AZ

ISSUED FOR BID

PREPARED BY: PACE Advanced Water Engineering
8723 E. VIA de VENTURA, SUITE 230 | SCOTTSDALE, CA 85258
P: (480) 991-3955 | www.pacewater.com

WRIGHT engineering corporation
ELECTRICAL ENGINEERING AND DESIGN
165 EAST CHILTON DRIVE
CHANDLER, ARIZONA 85225
PHONE: 480.497.5829
FAX: 480.497.5807
www.wrightengineering.us
Wright Project # 23319

CALL TWO WORKING DAYS BEFORE YOU DIG
602-263-1100
1-800-STAKE-IT
(OUTSIDE MARICOPA COUNTY)

SHEET E2.5
77 OF 99 SHEETS
JOB NO. B614

C:\2025\01b_Jerome WWTP\23319 E Dwg Tabs E2.5 Hyperlink.dwt 11/7/2025 4:08:40 PM

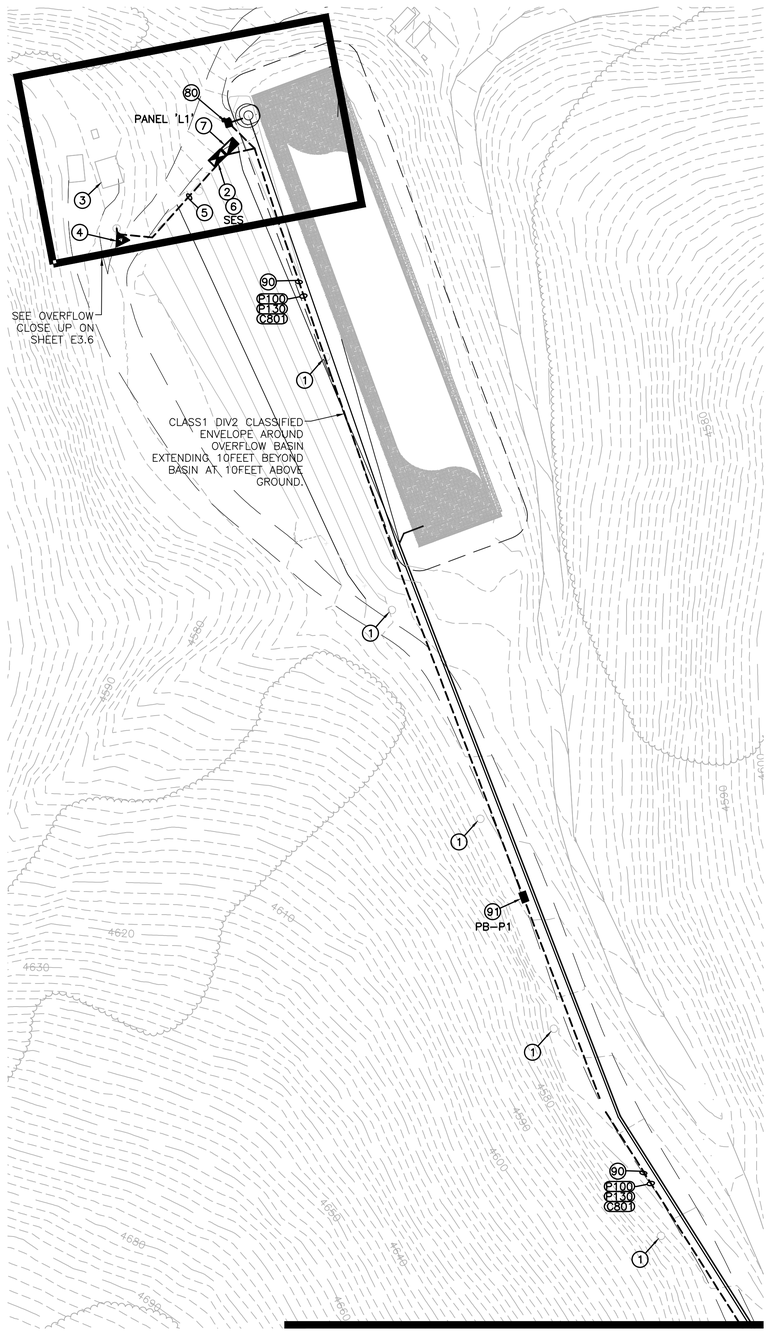

MATCHLINE 'A' SEE ABOVE RIGHT

MATCHLINE 'A' BELOW LEFT

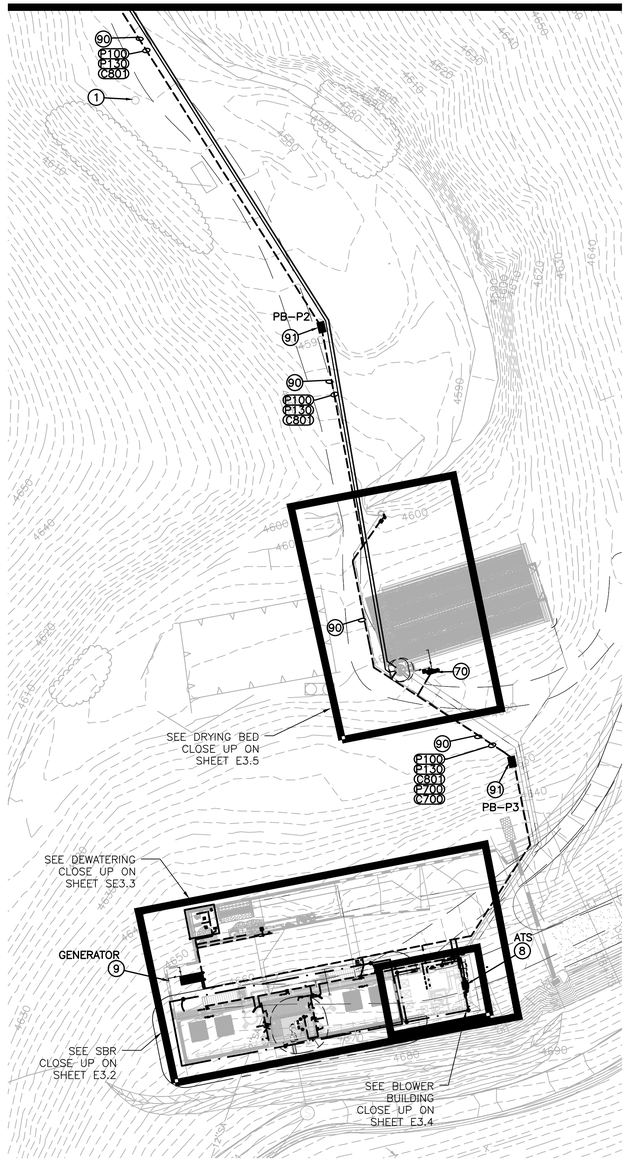

CONSTRUCTION NOTES

1. REMOVE ALL EXISTING CUSTOMER OWNED OVERHEAD ELECTRICAL AND POWER POLE AND DISPOSE OF PROPERLY. COORDINATE WITH OWNER FOR SCHEDULING.
2. REMOVE EXISTING SES AND PANEL AND DISPOSE OF PROPERLY. COORDINATE DISCONNECTION OF THE METER AND SECONDARY CONDUCTORS WITH APS
3. DE-ENERGIZE EXISTING LAB BUILDING UPON COMPLETION OF CONSTRUCTION OF THE NEW LAB. REMOVE ALL EXISTING CONDUCTORS AND ELECTRICAL EQUIPMENT AND DISPOSE OF PROPERLY. COORDINATE ALL WORK WITH OWNER AND POWER COMPANY PRIOR TO DE-ENERGIZATION.
4. COORDINATE WITH APS TO REPLACE THE EXISTING POLE MOUNTED SINGLE PHASE TRANSFORMER. APS TO INSTALL THREE PHASE TRANSFORMERS. CONTRACTOR SHALL VERIFY LOCATION OF NEW TRANSFORMER WITH APS. APS PLANS WILL DETERMINE EXACT LOCATION AND TAKE PRECEDENCE OVER THESE DRAWINGS. COORDINATE ALL WORK WITH APS.
5. APS SERVICE LINE. TRENCH AND INSTALL CONDUIT PER APS SPECIFICATIONS. POWER COMPANY PLANS WILL DETERMINE EXACT LOCATION OF CONDUIT AND TAKE PRECEDENCE OVER THESE DRAWINGS.
6. SES, 400 AMP, 277/480V, 3ø, 4W, SEE DETAIL 1 ON E4.1.
7. MINI-POWER ZONE AND PANELBOARD. SEE DETAIL 1 ON E4.1.
8. ATS 400A 277/480V, 3ø, 4W, SEE DETAIL 2 ON SHEET E4.1.
9. GENERATOR 125KW, 277/480V, 3ø, 4W, SEE DETAIL 1 ON E4.3.
70. 30A DRYING BED LIFT PUMP CONTROL PANEL, 480V, 3ø, 4W. ELECTRICAL CONTRACTOR SHALL MAKE ALL POWER AND CONTROL CONNECTIONS PER THESE PLANS AND SPECIFICATIONS AND THE MANUFACTURERS REQUIREMENTS. SEE DETAIL 1 ON SHEET E4.4.
80. OVERFLOW LIFT PUMP CONTROL PANEL, BY VENDOR. 240V, 1ø, 3W. ELECTRICAL CONTRACTOR SHALL MAKE ALL POWER AND CONTROL CONNECTIONS PER THESE PLANS AND SPECIFICATIONS AND THE MANUFACTURERS REQUIREMENTS. SEE DETAIL 1 ON SHEET E4.4.
90. JOINT TRENCH WITH WATER LINES. MAINTAIN 24-INCH SEPARATION. SEE DETAIL 3 ON SHEET E4.3.
91. STACKED #7 CONCRETE PULL BOX. INSTALL AS SHOWN OR AS NEEDED IF CONDUIT RUNS WILL EXCEED 360 DEGREE OF BENDS OR THE LENGTH EXCEEDS 400 FEET. INSTALL 1 FOR POWER AND 1 FOR CONTROL. SEE DETAIL 5 ON SHEET E4.3.

LEGEND

- PROPOSED 3ø POWER COMPANY TRANSFORMER
- SES 400A 277/480V 3ø 4W
- TRANSFORMER 480V-120/240V
- PANEL 120/240V 1ø 3W
- CONTROL PANEL
- EYS SEALS, CLASS 1 DIVISION 1
- ELECTRICAL SWITCH
- 120V GFCI RECEPTACLE
- 120V GFCI QUADRUPLEX RECEPTACLE
- ELECTRICAL AND COMMUNICATION PULL BOXES
- NEW PULL BOX
- NON FUSED NEMA 4X DISCONNECT
- UNDERGROUND ELECTRICAL CONDUIT
- ABOVE GROUND ELECTRICAL CONDUIT
- FLEXIBLE METALLIC CONDUIT
- GROUNDING ELECTRODE CONDUCTOR
- GROUND ROD WITH INSPECTION WELL. INSPECTION WELL IS ONLY FOR THE FIRST GROUND ROD CONNECTED TO

PROPOSED SITE PLAN ELECTRICAL

NORTH

GRAPHIC SCALE
30 15 0 15 30 60
1 INCH = 30 FEET

WRIGHT engineering corporation
ELECTRICAL ENGINEERING AND DESIGN
165 EAST CHILTON DRIVE
CHANDLER, ARIZONA 85225
PHONE: 480.497.5829
FAX: 480.497.5807
www.wrightengineering.us
Wright Project # 23319

CALL TWO WORKING DAYS BEFORE YOU DIG
602-263-1100
1-800-STAKE-IT
(OUTSIDE MARICOPA COUNTY)

NO	BY	DATE	REVISIONS	DATE	APP.

Registered Professional Engineer (Electrical)
Certificate No. 73954
JASON BELLEDUNT
Date 6-30-27
Expires 6-30-27

PREPARED BY: WRIGHT ENGINEERING
DESIGNED BY: JHB
DRAWN BY: XAG
CHECKED BY: JHB
SCALE: AS NOTED
DATE: NOV 2025
JOB NO. B614

TITLE
ELECTRICAL
PROPOSED SITE PLAN

JOB
TOWN OF JEROME
WASTEWATER
TREATMENT PLANT
YAVAPAI CO. AZ

ISSUED FOR BID

PREPARED BY:
PACE
Advanced Water Engineering
8723 E. VIA de COMMERCIO, SUITE 1-A, SCOTTSDALE, CA 85258
P: (480) 991-3595 | www.pacewater.com

SHEET
E3.1
78 OF 99 SHEETS
JOB NO. B614

THESE DRAWINGS ARE THE PROPERTY OF P.A.C.E. AND SHALL NOT BE REPRODUCED IN ANY MANNER NOR BE USED FOR CONSTRUCTION UNLESS STAMPED "ISSUED FOR CONSTRUCTION".

M:\2025\2519_Jerome_WWTP\2519.dwg, 11x 17, 1:1 plotted on 11/4/25 at 8:58:48 PM

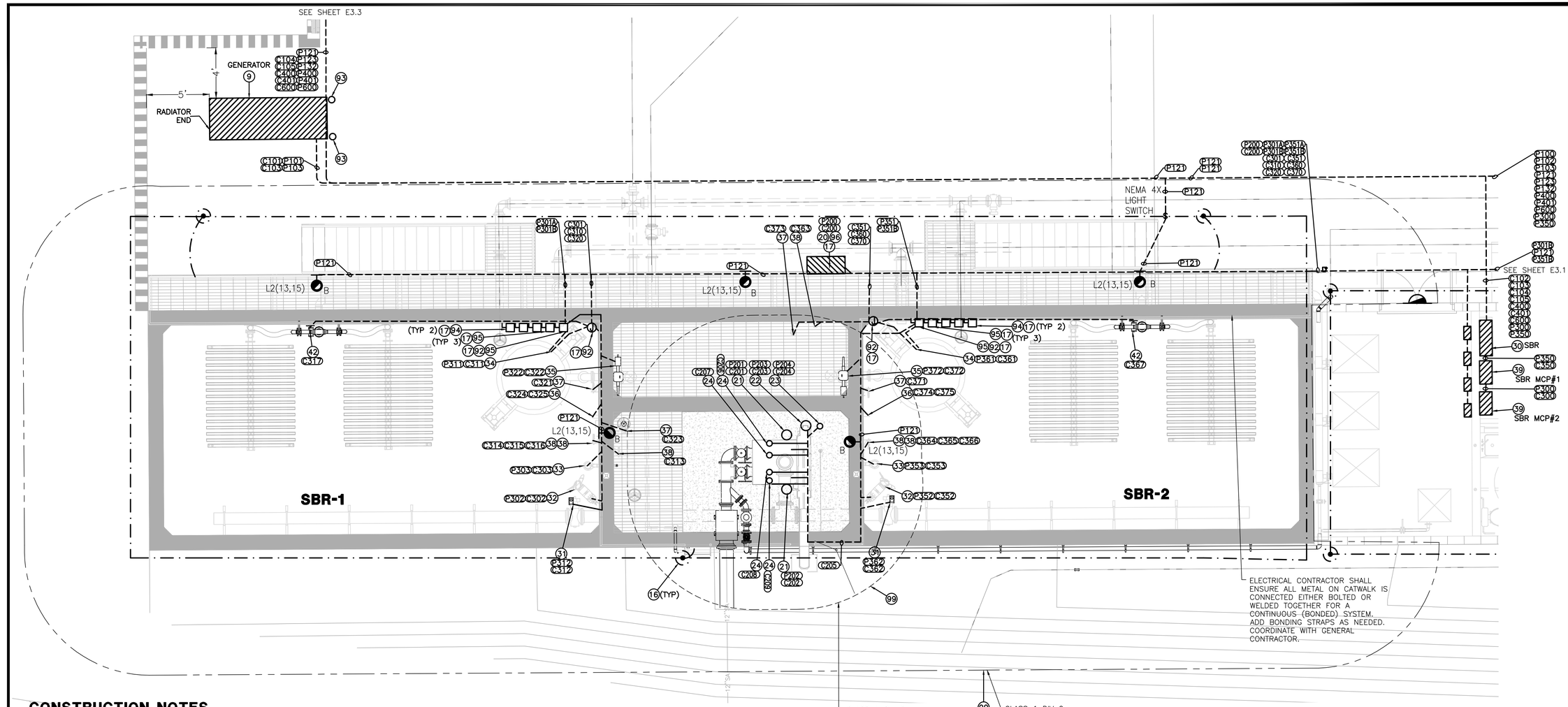

CONSTRUCTION NOTES

(9) GENERATOR 125KW, 277/480V, 3ø, 4W, SEE DETAIL 1 ON E4.3.

(16) LIGHTNING PROTECTION SYSTEM, PER NFPA AND DETAIL 6 ON SHEET E4.6

(17) CLASSIFIED SEAL OFF LISTED FOR CLASS 1 DIV 1. LOCATE WITHIN 10 FEET OF CLASSIFIED AREA BOUNDARY. PVC COATED RMS EYS TYPE OR EQUIVALENT. SEAL SHALL HAVE SEALING COMPOUND CHICO, OR EQUAL.

(20) 20A HEADWORKS CONTROL PANEL, BY VENDOR CLASS 1 DIVISION 2 LISTED. ELECTRICAL CONTRACTOR SHALL MAKE ALL POWER AND CONTROL CONNECTIONS PER THESE PLANS AND SPECIFICATIONS AND THE MANUFACTURERS REQUIREMENTS. SEE DETAIL 1 ON SHEET E4.4.

(21) INFLUENT COARSE SCREEN MOTOR. ELECTRICAL CONTRACTOR SHALL MAKE ALL POWER AND CONTROL CONNECTIONS PER THESE PLANS AND SPECIFICATIONS AND THE MANUFACTURERS REQUIREMENTS.

(22) INFLUENT CONVEYOR MOTOR. ELECTRICAL CONTRACTOR SHALL MAKE ALL POWER AND CONTROL CONNECTIONS PER THESE PLANS AND SPECIFICATIONS AND THE MANUFACTURERS REQUIREMENTS.

(23) POTABLE SOLENOID VALVE AT HEADWORKS. ELECTRICAL CONTRACTOR SHALL MAKE ALL POWER AND CONTROL CONNECTIONS PER THESE PLANS AND SPECIFICATIONS AND THE MANUFACTURERS REQUIREMENTS.

(24) ULTRASONIC LEVEL TRANSDUCER. ELECTRICAL CONTRACTOR SHALL MAKE ALL POWER AND CONTROL CONNECTIONS PER THESE PLANS AND SPECIFICATIONS AND THE MANUFACTURERS REQUIREMENTS.

(30) SBR PANEL BY VENDOR, ELECTRICAL CONTRACTOR SHALL MAKE ALL POWER AND CONTROL CONNECTIONS PER THESE PLANS AND SPECIFICATIONS AND THE MANUFACTURERS REQUIREMENTS.

(31) SBR INFLUENT VALVE. ELECTRICAL CONTRACTOR SHALL MAKE ALL POWER AND CONTROL CONNECTIONS PER THESE PLANS AND SPECIFICATIONS AND THE MANUFACTURERS REQUIREMENTS.

(32) SBR SUBMERSIBLE MIXER. ELECTRICAL CONTRACTOR SHALL MAKE ALL POWER AND CONTROL CONNECTIONS PER THESE PLANS AND SPECIFICATIONS AND THE MANUFACTURERS REQUIREMENTS.

(33) WAS TRANSFER PUMP. ELECTRICAL CONTRACTOR SHALL MAKE ALL POWER AND CONTROL CONNECTIONS PER THESE PLANS AND SPECIFICATIONS AND THE MANUFACTURERS REQUIREMENTS.

(34) DECANT MOTOR. ELECTRICAL CONTRACTOR SHALL MAKE ALL POWER AND CONTROL CONNECTIONS PER THESE PLANS AND SPECIFICATIONS AND THE MANUFACTURERS REQUIREMENTS.

(35) SBR DECANT VALVE. ELECTRICAL CONTRACTOR SHALL MAKE ALL POWER AND CONTROL CONNECTIONS PER THESE PLANS AND SPECIFICATIONS AND THE MANUFACTURERS REQUIREMENTS.

(36) DO TRANSMITTER AND ANALYZER. ELECTRICAL CONTRACTOR SHALL MAKE ALL POWER AND CONTROL CONNECTIONS PER THESE PLANS AND SPECIFICATIONS AND THE MANUFACTURERS REQUIREMENTS.

(37) SUBMERSIBLE PRESSURE TRANSDUCER. ELECTRICAL CONTRACTOR SHALL MAKE ALL POWER AND CONTROL CONNECTIONS PER THESE PLANS AND SPECIFICATIONS AND THE MANUFACTURERS REQUIREMENTS.

(38) LEVEL FLOAT. ELECTRICAL CONTRACTOR SHALL MAKE ALL POWER AND CONTROL CONNECTIONS PER THESE PLANS AND SPECIFICATIONS AND THE MANUFACTURERS REQUIREMENTS.

(39) SBR MOTOR CONTROL PANEL, PROVIDE AND INSTALL. ELECTRICAL CONTRACTOR SHALL MAKE ALL POWER AND CONTROL CONNECTIONS PER THESE PLANS AND SPECIFICATIONS AND THE MANUFACTURERS REQUIREMENTS.

(40) SBR EFFLUENT VALVE. ELECTRICAL CONTRACTOR SHALL MAKE ALL POWER AND CONTROL CONNECTIONS PER THESE PLANS AND SPECIFICATIONS AND THE MANUFACTURERS REQUIREMENTS.

(41) FLOW METER. ELECTRICAL CONTRACTOR SHALL MAKE ALL POWER AND CONTROL CONNECTIONS PER THESE PLANS AND SPECIFICATIONS AND THE MANUFACTURERS REQUIREMENTS.

(42) SBR AIR VALVE. ELECTRICAL CONTRACTOR SHALL MAKE ALL POWER AND CONTROL CONNECTIONS PER THESE PLANS AND SPECIFICATIONS AND THE MANUFACTURERS REQUIREMENTS.

(92) STANCHION MOUNTED NEMA 4X SST JUNCTION BOXES. MAINTAIN 3' CLEARANCE IN FRONT OF EQUIPMENT. EXTRA SLACK SHALL REMAIN IN THE J-BOX FOR FUTURE LEVEL ADJUSTMENT. SEE DETAIL 2 ON SHEET E4.2 AND DETAIL 1 ON SHEET E4.4.

(93) TRAFFIC BOLLARD TO BE INSTALLED PER CIVIL PLANS. LOCATE OUT OF 4 FOOT WORKING SPACE ENVELOPE PER NEC.

(94) NON-FUSED DISCONNECT, NEMA 4X FOR OUTDOOR AND CLASS 1 DIV 1 WITHIN CLASSIFIED BOUNDARY. IF LOCATION IS ABOVE BOUNDARY, NEMA 4X WITH CLASSIFIED SEAL OFFS IS ACCEPTABLE. PROVIDE PERMANENT LABEL SUITABLE FOR CORROSIVE ENVIRONMENTS AND UV RESISTANT. MATCH LABEL NAMING CONVENTION WITH P&ID. SEE DETAIL 5 ON SHEET E4.2 & SEE DETAIL 1 ON SHEET E4.4.

(95) ROTARY TYPE DISCONNECT, NEMA 4X FOR OUTDOOR AND CLASS 1 DIV 1 WITHIN CLASSIFIED BOUNDARY. IF LOCATION IS ABOVE BOUNDARY, NEMA 4X WITH CLASSIFIED SEAL OFFS IS ACCEPTABLE. PROVIDE PERMANENT LABEL SUITABLE FOR CORROSIVE ENVIRONMENTS AND UV RESISTANT. MATCH LABEL NAMING CONVENTION WITH P&ID. SEE DETAIL 5 ON SHEET E4.2 & SEE DETAIL 1 ON SHEET E4.4.

(96) E-STOP, NEMA 4X FOR OUTDOOR AND CLASS 1 DIV 1 WITHIN CLASSIFIED BOUNDARY. IF LOCATION IS ABOVE BOUNDARY, NEMA 4X WITH CLASSIFIED SEAL OFFS IS ACCEPTABLE. PROVIDE PERMANENT LABEL SUITABLE FOR CORROSIVE ENVIRONMENTS AND UV RESISTANT. MATCH LABEL NAMING CONVENTION WITH P&ID. SEE DETAIL 5 ON SHEET E4.2.

CLASS 1 DIV 2
PER NFPA 820
TABLE 5.2.2 SECTION 2C
COARSE FINE SCREEN FACILITIES NOT ENCLOSED, OPEN TO ATMOSPHERE/IF ENCLOSED, THEN THE CLASSIFICATION IS ONLY WITHIN THE TANK.

ENVELOPE: WITHIN A 10 FT AROUND EQUIPMENT AND OPEN CHANNEL

CLASS 1 DIV 2
PER NFPA 820
TABLE 5.2.2 SECTION 7C
PRIMARY SEDIMENTATION TANKS (SBR)
NOT ENCLOSED, OPEN TO ATMOSPHERE.

ENVELOPE: INTERIOR OF THE TANK FROM THE MINIMUM OPERATING WATER SURFACE TO THE TOP OF THE TANK WALL;

ENVELOPE 18 INCHES ABOVE THE TOP OF THE TANK AND EXTENDING 18 INCHES BEYOND THE EXTERIOR WALL;

ENVELOPE 18 INCHES ABOVE GRADE EXTENDING 10 FT HORIZONTALLY FROM THE EXTERIOR TANK WALLS

SBR PLAN ELECTRICAL

(99) CLASSIFIED AREA VERIFY BOUNDARY WITH THE NFPA. INSTALL ANY PANELS, DISCONNECTS, SPLICES, ARC MAKING EQUIPMENT OUT OF THE BOUNDARY, WHERE NOT POSSIBLE THEN INSTALL CLASS 1 DIV 1 LISTED EQUIPMENT. ALL CONDUIT WITHIN BOUNDARY SHALL BE CLASS 1 DIV 1 OR 2 RATED AS REQUIRED BY THE BOUNDARY. USE PVC COATED THREADED RMC CONDUIT, INSTALL STAINLESS STEEL 316 ENCLOSURES, HARDWARE AND EQUIPMENT WITHIN 10 FEET OF THE BOUNDARY. INSTALL CLASSIFIED SEAL OFFS WITHIN 10 FEET OF THE BOUNDARY, AT A PANEL OR JUNCTION BOX IS PREFERRED.

LEGEND

- PROPOSED 3ø POWER COMPANY TRANSFORMER
- SES 400A 277/480V 3ø 4W
- TRANSFORMER 480V–120/240V
- PANEL 120/240V 1ø 3W
- CONTROL PANEL
- EYS SEALS, CLASS 1 DIVISION 1
- ELECTRICAL SWITCH
- 120V GFCI RECEPTACLE
- 120V GFCI QUADRUPLEX RECEPTACLE
- ELECTRICAL AND COMMUNICATION PULL BOXES
- NEW PULL BOX
- NON FUSED NEMA 4X DISCONNECT
- UNDERGROUND ELECTRICAL CONDUIT
- ABOVE GROUND ELECTRICAL CONDUIT
- FLEXIBLE METALLIC CONDUIT
- GROUNDING ELECTRODE CONDUCTOR
- GROUND ROD WITH INSPECTION WELL. INSPECTION WELL IS ONLY FOR THE FIRST GROUND ROD CONNECTED TO

GRAPHIC SCALE
4 2 0 2 4 8
1 INCH = 4 FEET
NORTH

WRIGHT engineering corporation
ELECTRICAL ENGINEERING AND DESIGN
165 EAST CHILTON DRIVE
CHANDLER, ARIZONA 85225
PHONE: 480.497.5829
FAX: 480.497.5807
www.wrightengineering.us
Wright Project # 23319

CALL TWO WORKING DAYS BEFORE YOU DIG
602-263-1100
1-800-STAKE-IT
(OUTSIDE MARICOPA COUNTY)

NO	BY	DATE	REVISIONS	DATE	APP.

Registered Professional Engineer (Electrical) Certificate No. 73954 JAMES RILEY HEDT Date Signed 9-30-25 Expires 9-30-27

PREPARED BY: WRIGHT ENGINEERING
DESIGNED BY: JHB
DRAWN BY: XAG
CHECKED BY: JHB
SCALE: AS NOTED
DATE: NOV 2025
JOB NO. B614

THESE DRAWINGS ARE THE PROPERTY OF P.A.C.E. AND SHALL NOT BE REPRODUCED IN ANY MANNER NOR BE USED FOR CONSTRUCTION UNLESS STAMPED "ISSUED FOR CONSTRUCTION".

TITLE
ELECTRICAL
SBR PLAN

JOB
TOWN OF JEROME
WASTEWATER
TREATMENT PLANT
YAVAPAI CO. AZ

ISSUED FOR BID

PREPARED BY:
PACE
Advanced Water Engineering
Consulting, Design & Construction Services
8723 E. VIA DE VENTURA, SUITE A-140, SCOTTSDALE, AZ 85258
P: (480) 991-3595 | www.pacewater.com

SHEET
E3.2
79 OF 99 SHEETS
JOB NO. B614

X:\2025\25-Dwgs\WTP25115.dwg, Tab: E3.2, by:jessie.an 11/4/25 at 9:05:43 PM

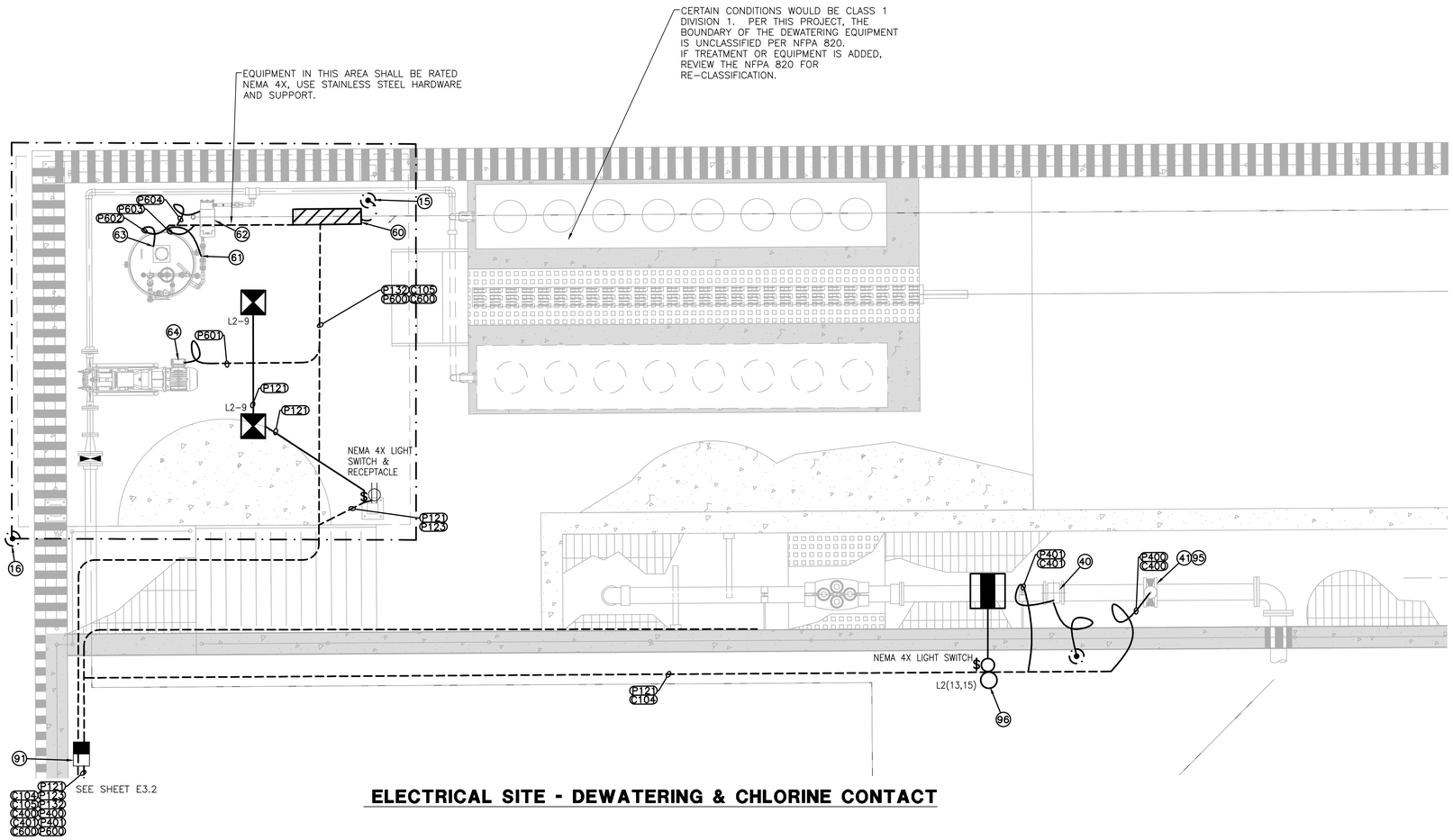

ELECTRICAL SITE - DEWATERING & CHLORINE CONTACT

CONSTRUCTION NOTES

(15) GROUNDING ELECTRODE CONDUCTORS, GROUND ROD, AND INSPECTION WELL FOR ONLY THE FIRST GROUND ROD, PER SINGLE LINE DIAGRAMS AND DETAILS ON SHEET E4.6.

(16) LIGHTNING PROTECTION SYSTEM, PER NFPA AND DETAIL 6 ON SHEET E4.6

(40) SBR EFFLUENT VALVE. ELECTRICAL CONTRACTOR SHALL MAKE ALL POWER AND CONTROL CONNECTIONS PER THESE PLANS AND SPECIFICATIONS AND THE MANUFACTURERS REQUIREMENTS.

(41) FLOW METER. ELECTRICAL CONTRACTOR SHALL MAKE ALL POWER AND CONTROL CONNECTIONS PER THESE PLANS AND SPECIFICATIONS AND THE MANUFACTURERS REQUIREMENTS.

(60) 20A SLUDGE BAGGING SYSTEM CONTROL PANEL, BY VENDOR. ELECTRICAL CONTRACTOR SHALL MAKE ALL POWER AND CONTROL CONNECTIONS PER THESE PLANS AND SPECIFICATIONS AND THE MANUFACTURERS REQUIREMENTS.

(61) POTABLE WATER VALVE. ELECTRICAL CONTRACTOR SHALL MAKE ALL POWER AND CONTROL CONNECTIONS PER THESE PLANS AND SPECIFICATIONS AND THE MANUFACTURERS REQUIREMENTS.

(62) POLYMER METERING PUMP. ELECTRICAL CONTRACTOR SHALL MAKE ALL POWER AND CONTROL CONNECTIONS PER THESE PLANS AND SPECIFICATIONS AND THE MANUFACTURERS REQUIREMENTS.

(63) DRY POLYMER MIXER. ELECTRICAL CONTRACTOR SHALL MAKE ALL POWER AND CONTROL CONNECTIONS PER THESE PLANS AND SPECIFICATIONS AND THE MANUFACTURERS REQUIREMENTS.

(64) DEWATERING FEED PUMP. ELECTRICAL CONTRACTOR SHALL MAKE ALL POWER AND CONTROL CONNECTIONS PER THESE PLANS AND SPECIFICATIONS AND THE MANUFACTURERS REQUIREMENTS.

(91) STACKED #7 CONCRETE PULL BOX. INSTALL AS SHOWN OR AS NEEDED IF CONDUIT RUNS WILL EXCEED 360 DEGREE OF BENDS OR THE LENGTH EXCEEDS 400 FEET. INSTALL 1 FOR POWER AND 1 FOR CONTROL. SEE DETAIL 5 ON SHEET E4.3.

(95) ROTARY TYPE DISCONNECT, NEMA 4X FOR OUTDOOR AND CLASS 1 DIV 1 WITHIN CLASSIFIED BOUNDARY. IF LOCATION IS ABOVE BOUNDARY, NEMA 4X WITH CLASSIFIED SEAL OFFS IS ACCEPTABLE. PROVIDE PERMANENT LABEL SUITABLE FOR CORROSIVE ENVIRONMENTS AND UV RESISTANT. MATCH LABEL NAMING CONVENTION WITH P&ID. SEE DETAIL 5 ON SHEET E4.2 & SEE DETAIL 1 ON SHEET E4.4.

(96) E-STOP, NEMA 4X FOR OUTDOOR AND CLASS 1 DIV 1 WITHIN CLASSIFIED BOUNDARY. IF LOCATION IS ABOVE BOUNDARY, NEMA 4X WITH CLASSIFIED SEAL OFFS IS ACCEPTABLE. PROVIDE PERMANENT LABEL SUITABLE FOR CORROSIVE ENVIRONMENTS AND UV RESISTANT. MATCH LABEL NAMING CONVENTION WITH P&ID. SEE DETAIL 5 ON SHEET E4.2.

LEGEND

- PROPOSED 3ø POWER COMPANY TRANSFORMER
- SES 400A 277/480V 3ø 4W
- TRANSFORMER 480V-120/240V
- PANEL 120/240V 1ø 3W
- CONTROL PANEL
- EYS SEALS, CLASS 1 DIVISION 1
- $ ELECTRICAL SWITCH
- 120V GFCI RECEPTACLE
- 120V GFCI QUADRUPLEX RECEPTACLE
- ELECTRICAL AND COMMUNICATION PULL BOXES
- NEW PULL BOX
- NON FUSED NEMA 4X DISCONNECT
- UNDERGROUND ELECTRICAL CONDUIT
- ABOVE GROUND ELECTRICAL CONDUIT
- FLEXIBLE METALLIC CONDUIT
- GROUNDING ELECTRODE CONDUCTOR
- GROUND ROD WITH INSPECTION WELL. INSPECTION WELL IS ONLY FOR THE FIRST GROUND ROD CONNECTED TO THE GROUNDING ELECTRODE CONDUCTOR.

GRAPHIC SCALE
2 1 0 1 2 4
1 INCH = 2 FEET
NORTH

WRIGHT engineering corporation
ELECTRICAL ENGINEERING AND DESIGN
165 EAST CHILTON DRIVE
CHANDLER, ARIZONA 85225
PHONE: 480.497.5829
FAX: 480.497.5807
www.wrightengineering.us
Wright Project # 23319

CALL TWO WORKING DAYS BEFORE YOU DIG
602-263-1100
1-800-STAKE-IT
(OUTSIDE MARICOPA COUNTY)

ISSUED FOR BID

NO	BY	DATE	REVISIONS	DATE	APP.

Registered Professional Engineer (Electrical) Certificate No. 73954 JAMES BELLEDIT 08-31-27 Expires 8-31-27

PREPARED BY: WRIGHT ENGINEERING
DESIGNED BY: JHB
DRAWN BY: XAG
CHECKED BY: JHB
DATE: NOV 2025
JOB NO.: B614
SCALE: AS NOTED

THESE DRAWINGS ARE THE PROPERTY OF P.A.C.E. AND SHALL NOT BE REPRODUCED IN ANY MANNER NOR BE USED FOR CONSTRUCTION UNLESS STAMPED "ISSUED FOR CONSTRUCTION".

TITLE: ELECTRICAL DEWATERING PAD

JOB: TOWN OF JEROME WASTEWATER TREATMENT PLANT YAVAPAI CO. AZ

PREPARED BY:
PACE
Advanced Water Engineering
8723 E. Via de Commercio, Suite 104, SCOTTSDALE, CA 85258
P: (480) 991-3395 | www.pacewater.com

SHEET E3.3
80 OF 99 SHEETS

JOB NO. B614

I:\JOBS\2019\Jerome WWTP\2019 E Dwg - TAC E3.3 - Dewatering.dwg, 11/26/25 4:58:43 PM

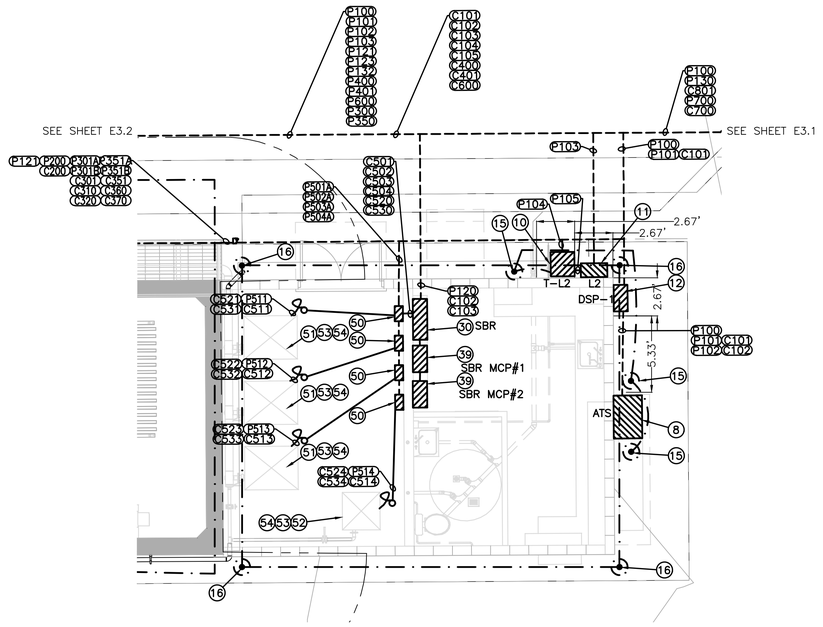

OPS BLOWER ELECTRICAL

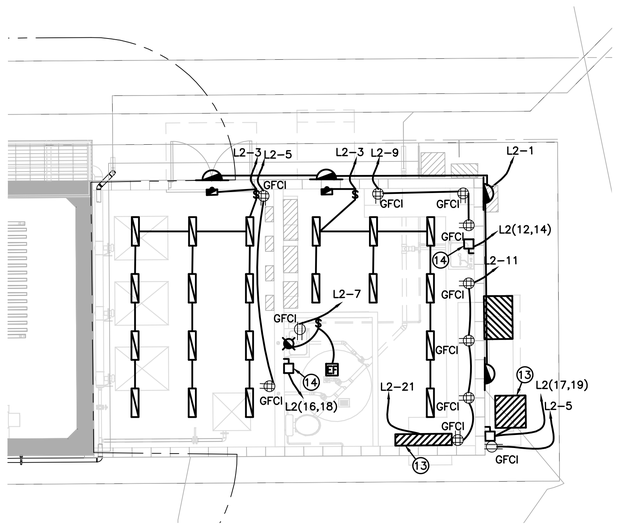

OPS BLOWER LIGHTING & POWER

CONSTRUCTION NOTES

8. ATS 400A 277/480V, 3ø, 4W, SEE DETAIL 2 ON SHEET E4.1.
10. TRANSFORMER 50KVA 480V – 120/240V 1ø, SEE DETAIL 2 ON SHEET E4.1.
11. PANELBOARD, 120/240V, 1ø, 3W, SEE DETAIL 2 ON E4.1.
12. DISTRIBUTION PANEL DSP-1 400A 277/480V, 3ø, 4W, SEE DETAIL 2 ON SHEET E4.1.
13. ELECTRICAL CONTRACTOR SHALL INSTALL POWER FEED TO MINI SPLIT AIR CONDITIONER AND HEAT PUMP & MAKE ALL 240V CONNECTIONS.
14. TANKLESS WATER HEATER & DISCONENCT. ELECTRICAL CONTRACTOR SHALL MAKE ALL POWER AND CONTROL CONNECTIONS PER THESE PLANS AND SPECIFICATIONS AND THE MANUFACTURERS REQUIREMENTS.
15. GROUNDING ELECTRODE CONDUCTORS, GROUND ROD, AND INSPECTION WELL FOR ONLY THE FIRST GROUND ROD, PER SINGLE LINE DIAGRAMS AND DETAILS ON SHEET E4.6.
16. LIGHTNING PROTECTION SYSTEM, PER NFPA AND DETAIL 6 ON SHEET E4.6
30. SBR PANEL BY VENDOR, ELECTRICAL CONTRACTOR SHALL MAKE ALL POWER AND CONTROL CONNECTIONS PER THESE PLANS AND SPECIFICATIONS AND THE MANUFACTURERS REQUIREMENTS.
50. VARIABLE FREQUENCY DRIVE. ELECTRICAL CONTRACTOR SHALL MAKE ALL POWER AND CONTROL CONNECTIONS PER THESE PLANS AND SPECIFICATIONS AND THE MANUFACTURERS REQUIREMENTS.
51. SBR AERATION BLOWER WITH INTEGRAL DISCONNECT. ELECTRICAL CONTRACTOR SHALL MAKE ALL POWER AND CONTROL CONNECTIONS PER THESE PLANS AND SPECIFICATIONS AND THE MANUFACTURERS REQUIREMENTS.
52. DIGESTER AERATION BLOWER WITH INTEGRAL DISCONNECT. ELECTRICAL CONTRACTOR SHALL MAKE ALL POWER AND CONTROL CONNECTIONS PER THESE PLANS AND SPECIFICATIONS AND THE MANUFACTURERS REQUIREMENTS.
53. PRESSURE TRANSDUCER. ELECTRICAL CONTRACTOR SHALL MAKE ALL POWER AND CONTROL CONNECTIONS PER THESE PLANS AND SPECIFICATIONS AND THE MANUFACTURERS REQUIREMENTS.
54. TEMPERATURE TRANSDUCER. ELECTRICAL CONTRACTOR SHALL MAKE ALL POWER AND CONTROL CONNECTIONS PER THESE PLANS AND SPECIFICATIONS AND THE MANUFACTURERS REQUIREMENTS.

LEGEND

- PROPOSED 3ø POWER COMPANY TRANSFORMER
- SES 400A 277/480V 3ø 4W
- TRANSFORMER 480V–120/240V
- PANEL 120/240V 1ø 3W
- CONTROL PANEL
- EYS SEALS, CLASS 1 DIVISION 1
- ELECTRICAL SWITCH
- 120V GFCI RECEPTACLE
- 120V GFCI QUADRUPLEX RECEPTACLE
- ELECTRICAL AND COMMUNICATION PULL BOXES
- NEW PULL BOX
- NON FUSED NEMA 4X DISCONNECT
- UNDERGROUND ELECTRICAL CONDUIT
- ABOVE GROUND ELECTRICAL CONDUIT
- FLEXIBLE METALLIC CONDUIT
- GROUNDING ELECTRODE CONDUCTOR
- GROUND ROD WITH INSPECTION WELL. INSPECTION WELL IS ONLY FOR THE FIRST GROUND ROD CONNECTED TO

GRAPHIC SCALE
5 2.5 0 2.5 5 10
1 INCH = 5 FEET
NORTH

WRIGHT engineering corporation
ELECTRICAL ENGINEERING AND DESIGN
165 EAST CHILTON DRIVE
CHANDLER, ARIZONA 85225
PHONE: 480.497.5829
FAX: 480.497.5807
www.wrightengineering.us
Wright Project # 23319

CALL TWO WORKING DAYS BEFORE YOU DIG
602-263-1100
1-800-STAKE-IT
(OUTSIDE MARICOPA COUNTY)

NO	BY	DATE	REVISIONS	DATE	APP.

Registered Professional Engineer (Electrical) Certificate No. 73954 JAMES RILLETT DAY Date Signed 11-24-25 Expires 9-30-27

PREPARED BY: WRIGHT ENGINEERING
DESIGNED BY: JHB
DRAWN BY: XAG
CHECKED BY: JHB
DATE: NOV 2025
JOB NO.: B614
SCALE: AS NOTED

THESE DRAWINGS ARE THE PROPERTY OF P.A.C.E. AND SHALL NOT BE REPRODUCED IN ANY MANNER NOR BE USED FOR CONSTRUCTION UNLESS STAMPED "ISSUED FOR CONSTRUCTION".

TITLE: ELECTRICAL BLOWER OPS

JOB: TOWN OF JEROME WASTEWATER TREATMENT PLANT YAVAPAI CO. AZ

ISSUED FOR BID

PREPARED BY:
PACE
Advanced Water Engineering
8723 E VIA de VENTURA, SUITE A-200, SCOTTSDALE, CA 85258
P: (480) 991-3955 | www.pacewater.com

SHEET
E3.4
81 OF 99 SHEETS

JOB NO. B614

C:\2025\01b_Jerome WWTP\2025 E Dwg - Tab: E3.4 - by jaime on 11/25/25 at 08:43 PM

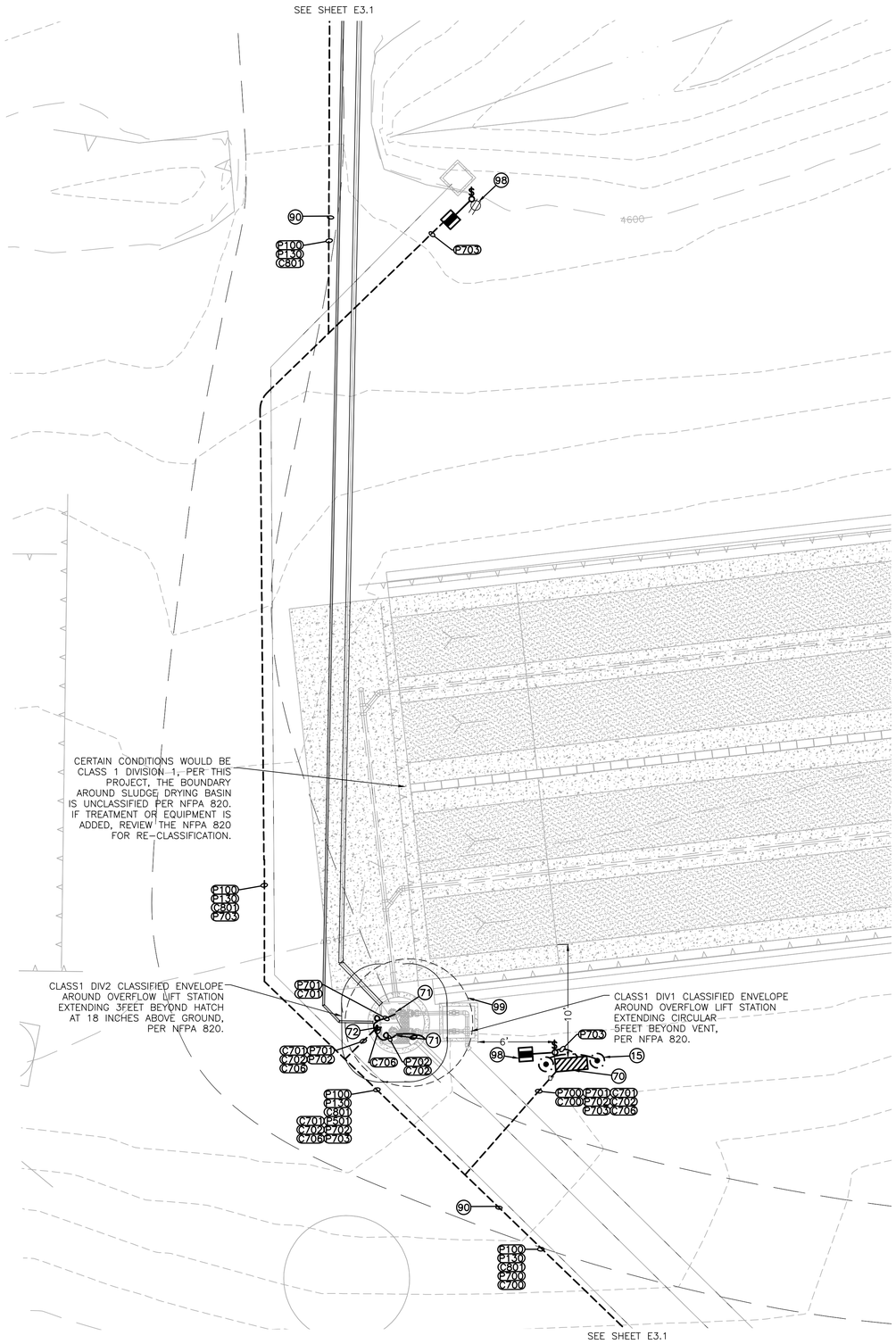

DRYING BED LIFT STATION ELECTRICAL

CONSTRUCTION NOTES

(15) GROUNDING ELECTRODE CONDUCTORS, GROUND ROD, AND INSPECTION WELL FOR ONLY THE FIRST GROUND ROD. PER SINGLE LINE DIAGRAMS AND DETAILS ON SHEET E4.6.

(70) 30A DRYING BED LIFT PUMP CONTROL PANEL, 480V, 3ø, 4W. ELECTRICAL CONTRACTOR SHALL MAKE ALL POWER AND CONTROL CONNECTIONS PER THESE PLANS AND SPECIFICATIONS AND THE MANUFACTURERS REQUIREMENTS. SEE DETAIL 1 ON SHEET E4.4.

(71) DRYING BED LIFT PUMP. ELECTRICAL CONTRACTOR SHALL MAKE ALL POWER AND CONTROL CONNECTIONS PER THESE PLANS AND SPECIFICATIONS AND THE MANUFACTURERS REQUIREMENTS. SEE DETAIL 4 ON SHEET E4.5.

(72) LEVEL FLOAT. ELECTRICAL CONTRACTOR SHALL MAKE ALL POWER AND CONTROL CONNECTIONS PER THESE PLANS AND SPECIFICATIONS AND THE MANUFACTURERS REQUIREMENTS. SEE DETAIL 4 ON SHEET E4.5.

(90) JOINT TRENCH WITH WATER LINES. MAINTAIN 24-INCH SEPARATION. SEE DETAIL 3 ON SHEET E4.3.

(98) 20A 120V GFCI DUPLEX RECEPTACLE WITH METAL WEATHERPROOF WHILE-IN-USE AND LOCKABLE COVER INSTALLED ONTO LIGHT POLE. SEE DETAIL 2 ON SHEET E4.5.

(99) CLASSIFIED AREA VERIFY BOUNDARY WITH THE NFPA. INSTALL ANY PANELS, DISCONNECTS, SPLICES, ARC MAKING EQUIPMENT OUT OF THE BOUNDARY, WHERE NOT POSSIBLE THEN INSTALL CLASS 1 DIV 1 LISTED EQUIPMENT. ALL CONDUIT WITHIN BOUNDARY SHALL BE CLASS 1 DIV 1 OR 2 RATED AS REQUIRED BY THE BOUNDARY. USE PVC COATED THREADED RMC CONDUIT, INSTALL STAINLESS STEEL 316 ENCLOSURES, HARDWARE AND EQUIPMENT WITHIN 10 FEET OF THE BOUNDARY. INSTALL CLASSIFIED SEAL OFFS WITHIN 10 FEET OF THE BOUNDARY, AT A PANEL OR JUNCTION BOX IS PREFERRED.

LEGEND

- PROPOSED 3ø POWER COMPANY TRANSFORMER
- SES 400A 277/480V 3ø 4W
- TRANSFORMER 480V-120/240V
- PANEL 120/240V 1ø 3W
- CONTROL PANEL
- EYS SEALS, CLASS 1 DIVISION 1
- ELECTRICAL SWITCH
- 120V GFCI RECEPTACLE
- 120V GFCI QUADRUPLEX RECEPTACLE
- ELECTRICAL AND COMMUNICATION PULL BOXES
- NEW PULL BOX
- NON FUSED NEMA 4X DISCONNECT
- UNDERGROUND ELECTRICAL CONDUIT
- ABOVE GROUND ELECTRICAL CONDUIT
- FLEXIBLE METALLIC CONDUIT
- GROUNDING ELECTRODE CONDUCTOR
- GROUND ROD WITH INSPECTION WELL. INSPECTION WELL IS ONLY FOR THE FIRST GROUND ROD CONNECTED TO

GRAPHIC SCALE
5 2.5 0 2.5 5 10
1 INCH = 5 FEET
NORTH

WRIGHT engineering corporation
ELECTRICAL ENGINEERING AND DESIGN
165 EAST CHILTON DRIVE
CHANDLER, ARIZONA 85225
PHONE: 480.497.5829
FAX: 480.497.5807
www.wrightengineering.us
Wright Project # 23319

CALL TWO WORKING DAYS BEFORE YOU DIG
602-263-1100
1-800-STAKE-IT
(OUTSIDE MARICOPA COUNTY)

NO	BY	DATE	REVISIONS	DATE	APP.

Registered Professional Engineer (Retired) Certificate No. 73954 JAMES RUSSELL DAVIS Date Signed 9-30-25 Expires 9-30-27

PREPARED BY: WRIGHT ENGINEERING
DESIGNED BY: JHB
DRAWN BY: XAG
CHECKED BY: JHB
SCALE: AS NOTED
DATE: NOV 2025
JOB NO.: B614

THESE DRAWINGS ARE THE PROPERTY OF P.A.C.E. AND SHALL NOT BE REPRODUCED IN ANY MANNER NOR BE USED FOR CONSTRUCTION UNLESS STAMPED "ISSUED FOR CONSTRUCTION".

TITLE
ELECTRICAL
DRYING BED LIFT STATION

JOB
TOWN OF JEROME
WASTEWATER
TREATMENT PLANT
YAVAPAI CO. AZ

ISSUED FOR BID

PREPARED BY:
PACE
Advanced Water Engineering
8723 E. Via de Commercio, Suite 1-104, Scottsdale, CA 85258
P: (480) 991-3595 | www.pacewater.com

SHEET
E3.5
82 OF 99 SHEETS
JOB NO. B614

10/22/2025 by:Jamie WWTP25.dwg, Tab: E3.1, by:jaustin on 10/22/25 at 3:58:49 PM

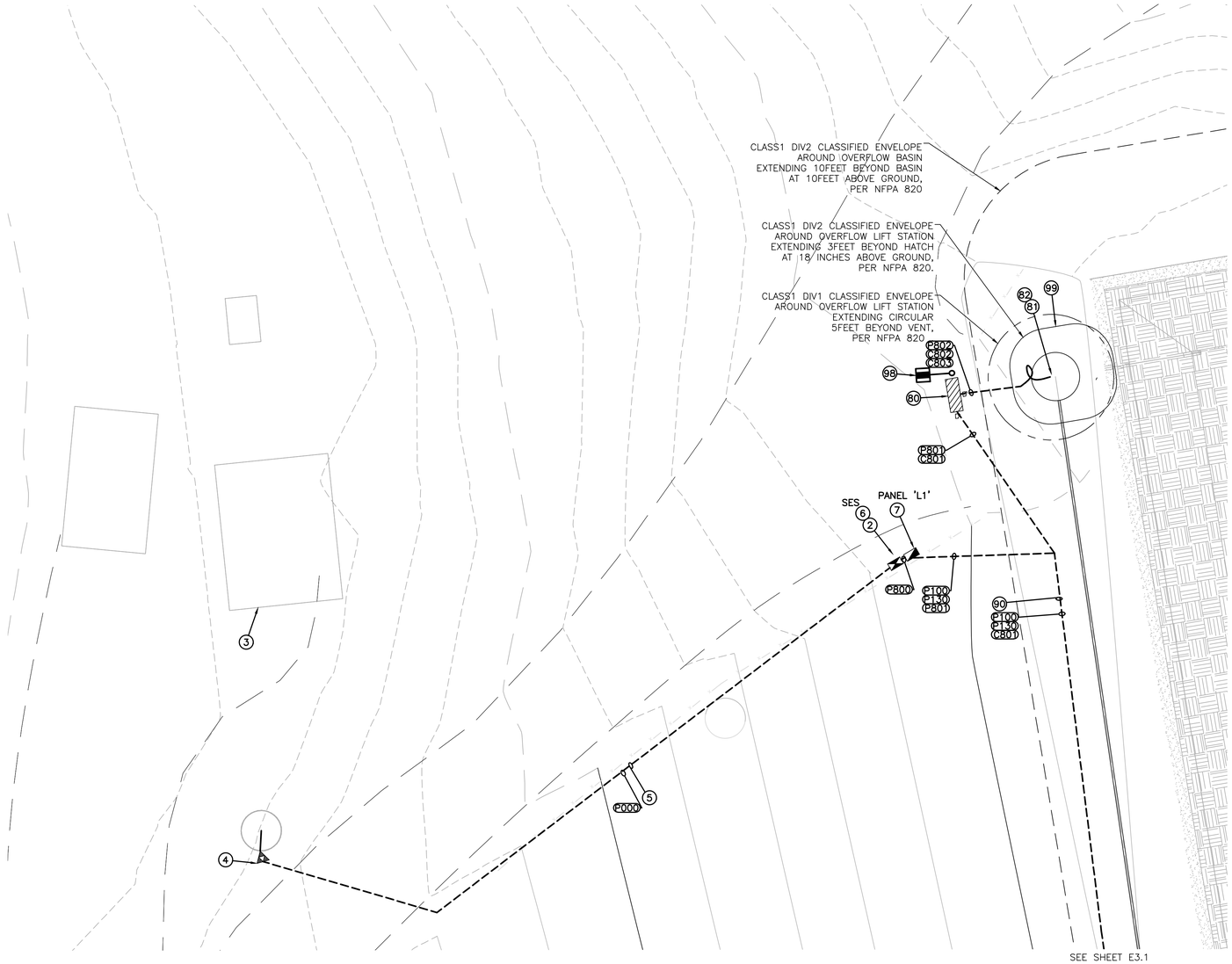

CONSTRUCTION NOTES

(2) REMOVE EXISTING SES AND PANEL AND DISPOSE OF PROPERLY. COORDINATE DISCONNECTION OF THE METER AND SECONDARY CONDUCTORS WITH APS

(3) DE-ENERGIZE EXISTING LAB BUILDING UPON COMPLETION OF CONSTRUCTION OF THE NEW LAB. REMOVE ALL EXISTING CONDUCTORS AND ELECTRICAL EQUIPMENT AND DISPOSE OF PROPERLY. COORDINATE ALL WORK WITH OWNER AND POWER COMPANY PRIOR TO DE-ENERGIZATION.

(4) COORDINATE WITH APS TO REPLACE THE EXISTING POLE MOUNTED SINGLE PHASE TRANSFORMER. APS TO INSTALL THREE PHASE TRANSFORMERS. CONTRACTOR SHALL VERIFY LOCATION OF NEW TRANSFORMER WITH APS. APS PLANS WILL DETERMINE EXACT LOCATION AND TAKE PRECEDENCE OVER THESE DRAWINGS. COORDINATE ALL WORK WITH APS.

(5) APS SERVICE LINE. TRENCH AND INSTALL CONDUIT PER APS SPECIFICATIONS. POWER COMPANY PLANS WILL DETERMINE EXACT LOCATION OF CONDUIT AND TAKE PRECEDENCE OVER THESE DRAWINGS.

(6) SES, 400 AMP, 277/480V, 3ø, 4W, SEE DETAIL 1 ON E4.1.

(80) OVERFLOW LIFT PUMP CONTROL PANEL, BY VENDOR. 240V, 1ø, 3W. ELECTRICAL CONTRACTOR SHALL MAKE ALL POWER AND CONTROL CONNECTIONS PER THESE PLANS AND SPECIFICATIONS AND THE MANUFACTURERS REQUIREMENTS. SEE DETAIL 1 ON SHEET E4.4.

(81) OVERFLOW LIFT PUMP. ELECTRICAL CONTRACTOR SHALL MAKE ALL POWER AND CONTROL CONNECTIONS PER THESE PLANS AND SPECIFICATIONS AND THE MANUFACTURERS REQUIREMENTS. SEE DETAIL 4 ON SHEET E4.5.

(82) LEVEL FLOAT. ELECTRICAL CONTRACTOR SHALL MAKE ALL POWER AND CONTROL CONNECTIONS PER THESE PLANS AND SPECIFICATIONS AND THE MANUFACTURERS REQUIREMENTS. SEE DETAIL 4 ON SHEET E4.5.

(90) JOINT TRENCH WITH WATER LINES. MAINTAIN 24-INCH SEPARATION. SEE DETAIL 3 ON SHEET E4.3.

(98) 20A 120V GFCI DUPLEX RECEPTACLE WITH METAL WEATHERPROOF WHILE-IN-USE AND LOCKABLE COVER INSTALLED ONTO LIGHT POLE. SEE DETAIL 2 ON SHEET E4.5.

LEGEND

- PROPOSED 3ø POWER COMPANY TRANSFORMER
- SES 400A 277/480V 3ø 4W
- TRANSFORMER 480V-120/240V
- PANEL 120/240V 1ø 3W
- CONTROL PANEL
- EYS SEALS, CLASS 1 DIVISION 1
- ELECTRICAL SWITCH
- 120V GFCI RECEPTACLE
- 120V GFCI QUADRUPLEX RECEPTACLE
- ELECTRICAL AND COMMUNICATION PULL BOXES
- NEW PULL BOX
- NON FUSED NEMA 4X DISCONNECT
- UNDERGROUND ELECTRICAL CONDUIT
- ABOVE GROUND ELECTRICAL CONDUIT
- FLEXIBLE METALLIC CONDUIT
- GROUNDING ELECTRODE CONDUCTOR
- GROUND ROD WITH INSPECTION WELL. INSPECTION WELL IS ONLY FOR THE FIRST GROUND ROD CONNECTED TO

ELECTRICAL SITE PLAN - SES & OVERFLOW PUMP STATION

NORTH

GRAPHIC SCALE
5 2.5 0 2.5 5 10
1 INCH = 5 FEET

WRIGHT engineering corporation
ELECTRICAL ENGINEERING AND DESIGN
165 EAST CHILTON DRIVE
CHANDLER, ARIZONA 85225
PHONE: 480.497.5829
FAX: 480.497.5807
www.wrightengineering.us
Wright Project # 23319

CALL TWO WORKING DAYS BEFORE YOU DIG
602-263-1100
1-800-STAKE-IT
(OUTSIDE MARICOPA COUNTY)

NO	BY	DATE	REVISIONS	DATE	APP.

Registered Professional Engineer (Electrical) Certificate No. 73954 JAMES RUSSELL LOTT 09-30-24 Expires 9-30-27

PREPARED BY: WRIGHT ENGINEERING
DESIGNED BY: JHB
DRAWN BY: XAG
CHECKED BY: JHB
SCALE: AS NOTED
DATE: NOV 2025
JOB NO. B614

TITLE: ELECTRICAL OVERFLOW BASIN

JOB: TOWN OF JEROME WASTEWATER TREATMENT PLANT
YAVAPAI CO. AZ

PREPARED BY:
PACE
Advanced Water Engineering
8723 E. VIA de VENTURA, SUITE A-200, SCOTTSDALE, CA 85258
P: (480) 991-3595 | www.pacewater.com

ISSUED FOR BID

SHEET
E3.6
83 OF 99 SHEETS

JOB NO. B614

THESE DRAWINGS ARE THE PROPERTY OF P.A.C.E. AND SHALL NOT BE REPRODUCED IN ANY MANNER NOR BE USED FOR CONSTRUCTION UNLESS STAMPED "ISSUED FOR CONSTRUCTION".

K:\2025\25-pwww\WWTP\25195.dwg Tab: E3.6 by pwww on 11/05/25 at 8:40:41 PM

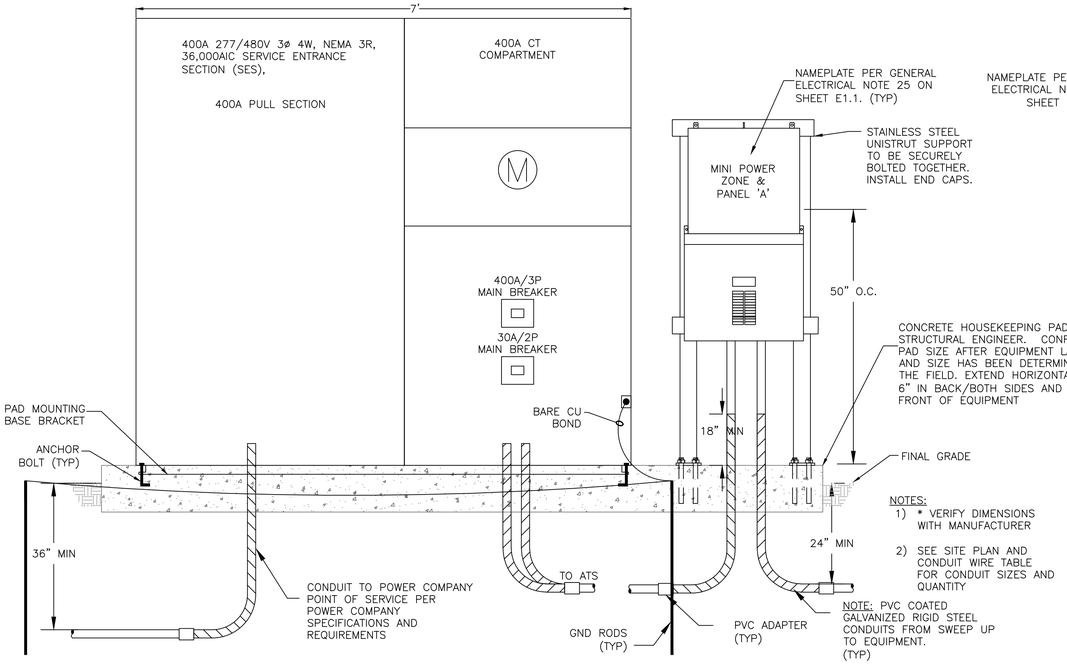

1 SES ELEVATION DETAIL
NO SCALE

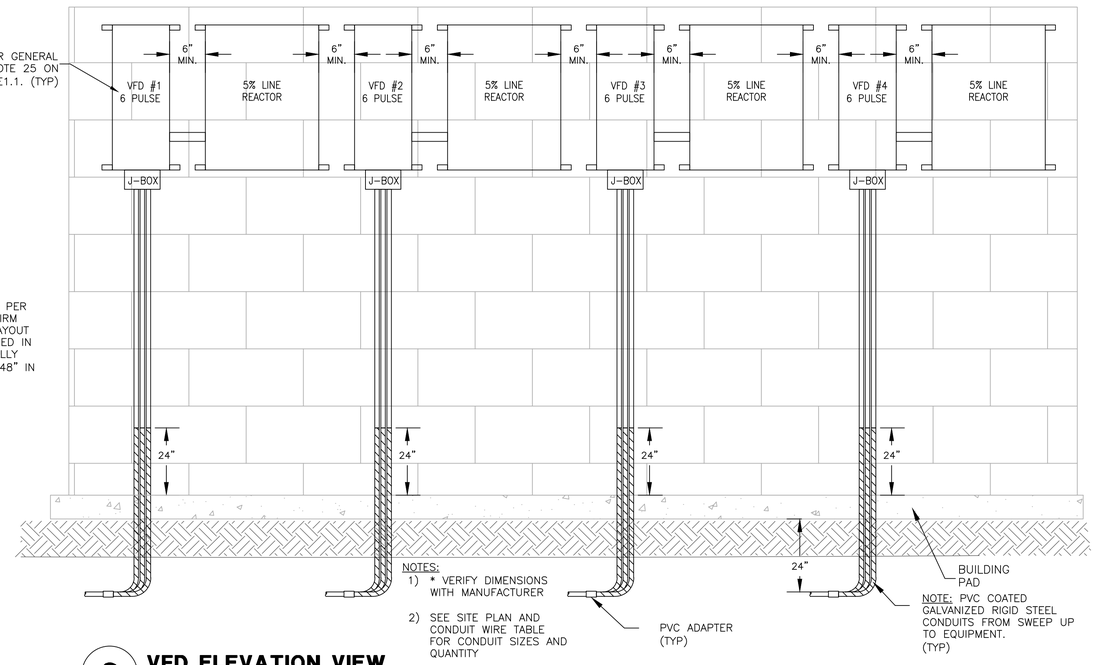

3 VFD ELEVATION VIEW
NOT TO SCALE

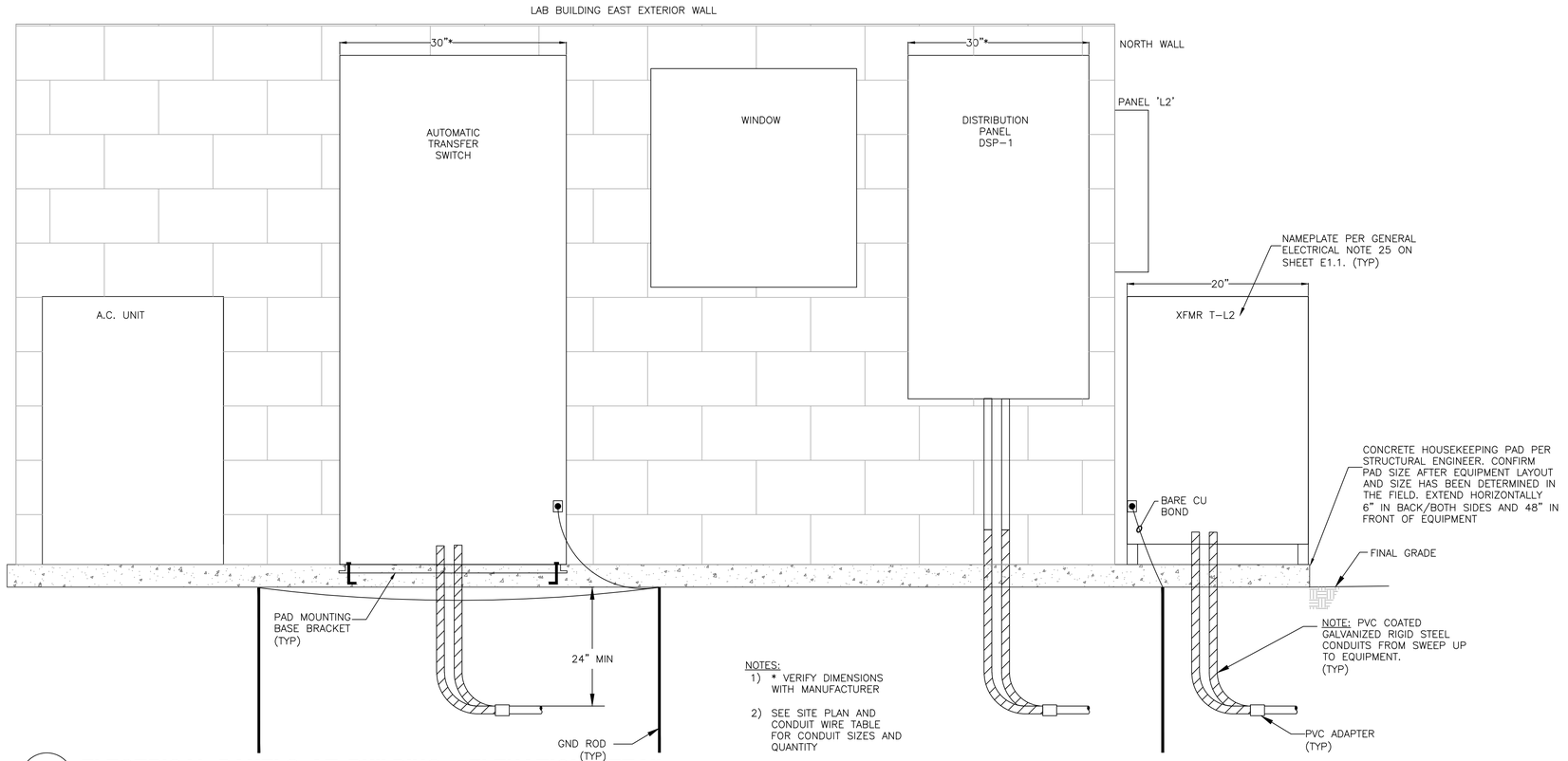

2 ELECTRICAL PANELS AT BUILDING - ELEVATION DETAIL
NO SCALE

WRIGHT engineering corporation
ELECTRICAL ENGINEERING AND DESIGN
165 EAST CHILTON DRIVE
CHANDLER, ARIZONA 85225
PHONE: 480.497.5829
FAX: 480.497.5807
www.wrightengineering.us
Wright Project # 23319

CALL TWO WORKING DAYS BEFORE YOU DIG
602-263-1100
1-800-STAKE-IT
(OUTSIDE MARICOPA COUNTY)

NO	BY	DATE	REVISIONS	DATE	APP.

Registered Professional Engineer (Electrical) Certificate No. 73954 JASON BILLEDT 09-30-24 Expires 9-30-27

PREPARED BY: WRIGHT ENGINEERING
DESIGNED BY: JHB
DRAWN BY: XAG
CHECKED BY: JHB
SCALE: AS NOTED
DATE: NOV 2025
JOB NO. B614

THESE DRAWINGS ARE THE PROPERTY OF P.A.C.E. AND SHALL NOT BE REPRODUCED IN ANY MANNER NOR BE USED FOR CONSTRUCTION UNLESS STAMPED "ISSUED FOR CONSTRUCTION".

TITLE: ELECTRICAL DETAILS I

JOB: TOWN OF JEROME WASTEWATER TREATMENT PLANT
YAVAPAI CO. AZ

PREPARED BY:
PACE
Advanced Water Engineering
8721 E. Via de Commercio, Suite 104 | Scottsdale, CA 85258
P: (408) 991-3595 | www.pacewater.com

ISSUED FOR BID

SHEET
E4.1
84 OF 99 SHEETS

JOB NO. B614

I:\2025\2519-Jerome WWTP\2025 ES Dwg - Tab E4.1 by jacob on 11/24/25 at 8:56:49 PM

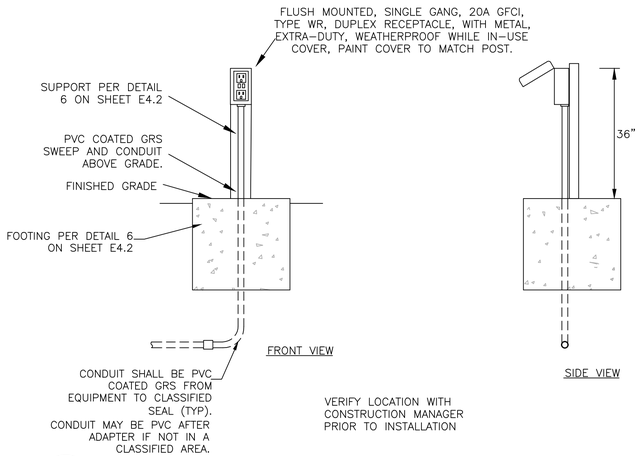

1 RECEPTACLE PEDESTAL DETAIL

NO SCALE

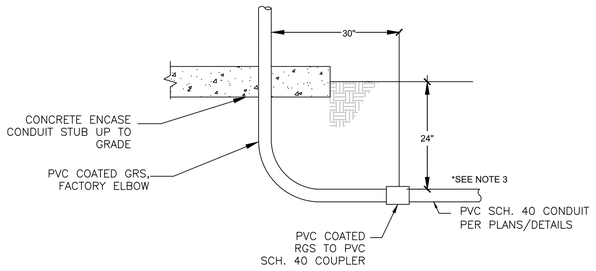

NOTES:
1. ALL DIMENSIONS SHOWN ARE MINIMUM.
2. PROVIDE 6 INCH COVER OF CONCRETE WITHIN 2 FEET OF ALL DRIVABLE AREAS PER DETAILS AND PLAN.
3. CONDUITS THROUGH CLASSIFIED AREA SHALL BE PVC COATED RGS UNDERGROUND

2 TYPICAL CONDUIT STUB UP DETAIL

NO SCALE

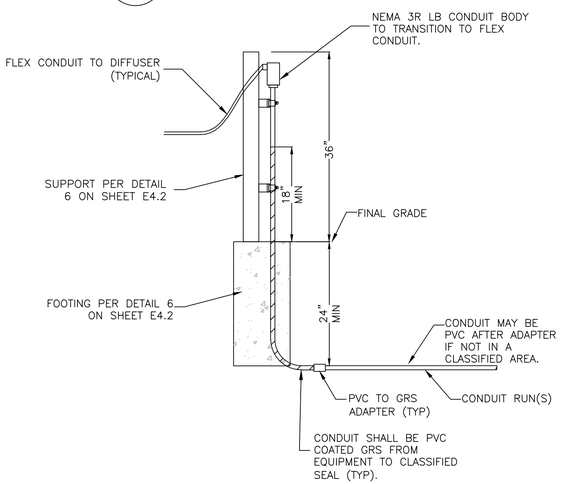

3 CONDUIT TO EQUIPMENT SUPPORT DETAIL

NO SCALE

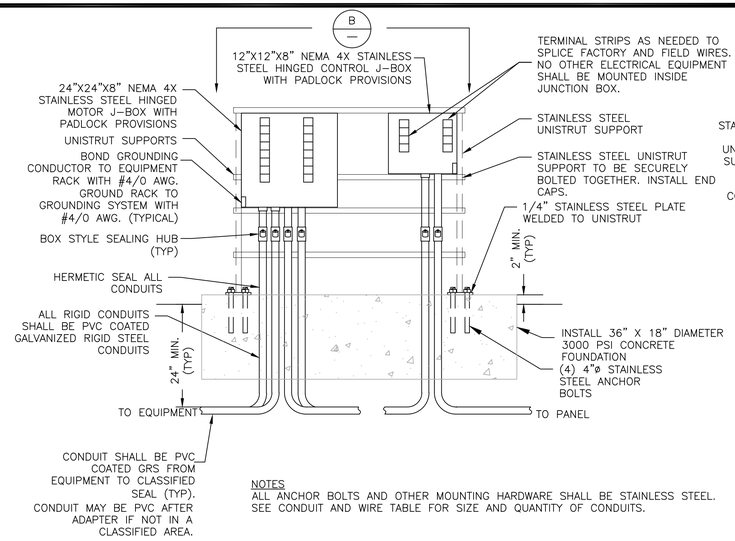

NOTES
ALL ANCHOR BOLTS AND OTHER MOUNTING HARDWARE SHALL BE STAINLESS STEEL.
SEE CONDUIT AND WIRE TABLE FOR SIZE AND QUANTITY OF CONDUITS.

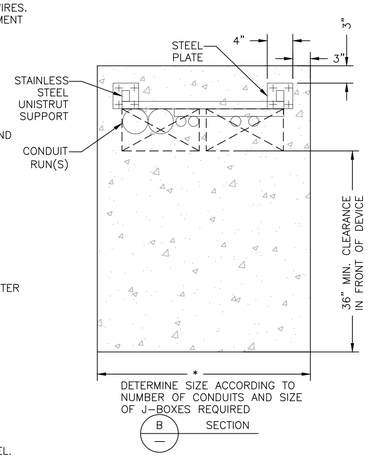

NOTES:
1) A 36" MIN. CLEARANCE SHALL BE MAINTAINED IN FRONT OF ALL ELECTRICAL DEVICES.

2) ALL EXPOSED CONDUITS SHALL BE GALVANIZED RIGID STEEL TO BELOW GRADE PAST 90° BEND TO PVC/GRS ADAPTER UNLESS OTHERWISE NOTED ON PLANS. WRAP PER GENERAL NOTE 11 ON SHEET E1.1.

3) ALL JUNCTION BOXES SHALL BE NEMA-4X STAINLESS STEEL UNLESS OTHERWISE NOTED ON PLANS.

4) ALL BARE STEEL COMPONENTS SHALL BE PRIMED AND PAINTED TAN TO MATCH SURROUNDING EQUIPMENT.

5) SEE RESPECTIVE SITE PLAN FOR CONDUIT SIZE AND QUANTITY DESIGNATIONS.

6)CONTRACTOR SHALL MAINTAIN AN 18" AIR GAP FOR CONDUIT RUN COMING FROM WET WELL. AIR GAP SHALL BE LOCATED AT THE JUNCTION BOX. CONTRACTOR SHALL INSTALL HERMETIC SEALS AT THE END OF THE THE CONDUIT RUNS INTO VAULT WALL TO PREVENT MOISTURE FROM ENTERING CONDUIT. CONDUIT SHALL BE CONTINUOUS GRS FROM WET WELL TO AIR GAP.

4 STANCHION MOUNTED JUNCTION BOX

NO SCALE

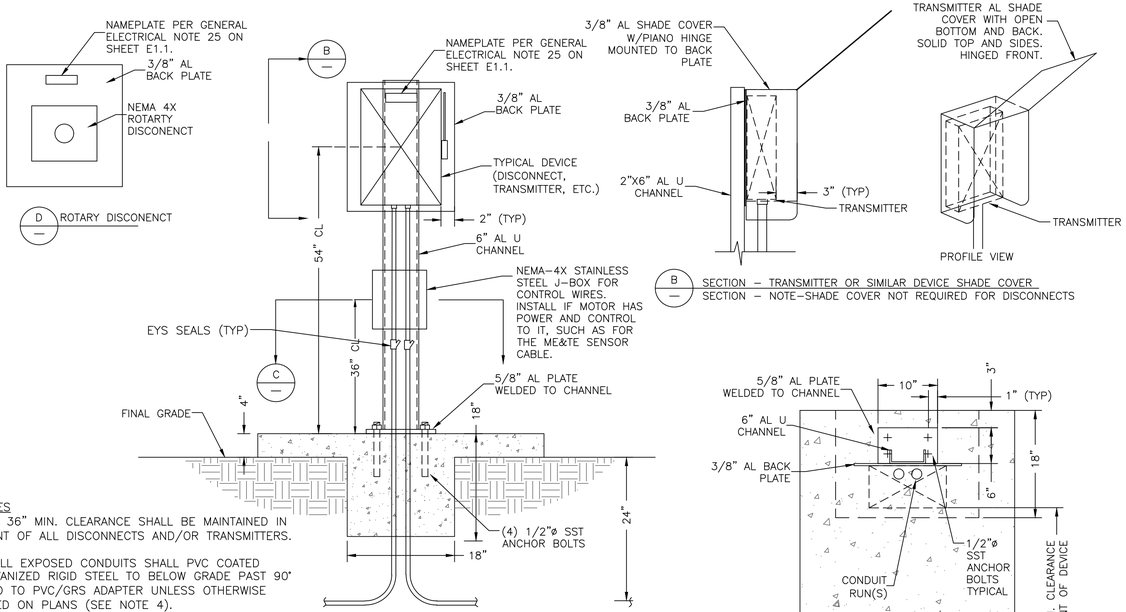

NOTES
1) A 36" MIN. CLEARANCE SHALL BE MAINTAINED IN FRONT OF ALL DISCONNECTS AND/OR TRANSMITTERS.

2) ALL EXPOSED CONDUITS SHALL PVC COATED GALVANIZED RIGID STEEL TO BELOW GRADE PAST 90° BEND TO PVC/GRS ADAPTER UNLESS OTHERWISE NOTED ON PLANS (SEE NOTE 4).

3) ALL DISCONNECTS SHALL BE NEMA-4X STAINLESS STEEL UNLESS OTHERWISE NOTED ON PLANS.

4)CONTRACTOR SHALL MAINTAIN 18" AIR GAP ON CONDUIT RUN COMING FROM WET WELL. AIR GAP SHALL BE LOCATED AT THE JUNCTION BOX. AIR GAP SHALL CONFORM TO THE NATIONAL ELECTRICAL CODE FOR CLASS 1, DIVISION 1 HAZARDOUS AREA. CONTRACTOR SHALL INSTALL HERMETIC SEALS AT THE END OF THE THE CONDUIT RUNS INTO VAULT WALL TO PREVENT MOISTURE FROM ENTERING CONDUIT. CONDUIT SHALL BE CONTINUOUS GRS FROM WET WELL TO 18" AIR GAP.

5 DISCONNECT/CONTROL NEMA 4X J-BOX DETAIL

NO SCALE

WRIGHT engineering corporation
ELECTRICAL ENGINEERING AND DESIGN
165 EAST CHILTON DRIVE
CHANDLER, ARIZONA 85225
PHONE: 480.497.5829
FAX: 480.497.5807
www.wrightengineering.us
Wright Project # 23319

CALL TWO WORKING DAYS BEFORE YOU DIG
602-263-1100
1-800-STAKE-IT
(OUTSIDE MARICOPA COUNTY)

NO	BY	DATE	REVISIONS	DATE	APP.

Registered Professional Engineer (Electrical) Certificate No. 73954 JASON BILLESDON Date Signed 9-30-25 Expires 9-30-27

PREPARED BY: WRIGHT ENGINEERING
DESIGNED BY: JHB
DRAWN BY: XAG
CHECKED BY: JHB
SCALE: AS NOTED
DATE: NOV 2025
JOB NO. B614

THESE DRAWINGS ARE THE PROPERTY OF P.A.C.E. AND SHALL NOT BE REPRODUCED IN ANY MANNER NOR BE USED FOR CONSTRUCTION UNLESS STAMPED "ISSUED FOR CONSTRUCTION".

TITLE: ELECTRICAL DETAILS II

JOB: TOWN OF JEROME WASTEWATER TREATMENT PLANT YAVAPAI CO. AZ

ISSUED FOR BID

PREPARED BY:
PACE
Advanced Water Engineering
8723 E. Via de Ventura, Suite 100, SCOTTSDALE, CA 85258
P: (480) 991-3955 | www.pacewater.com

SHEET E4.2
85 OF 99 SHEETS

JOB NO. B614

I:\2025\25-jerome WWTP\25-015 E4.2 - Tab E4.2 - Detail.dwg, Tab: E4.2 - by jacob on 11/24/25 at 3:56:10 PM

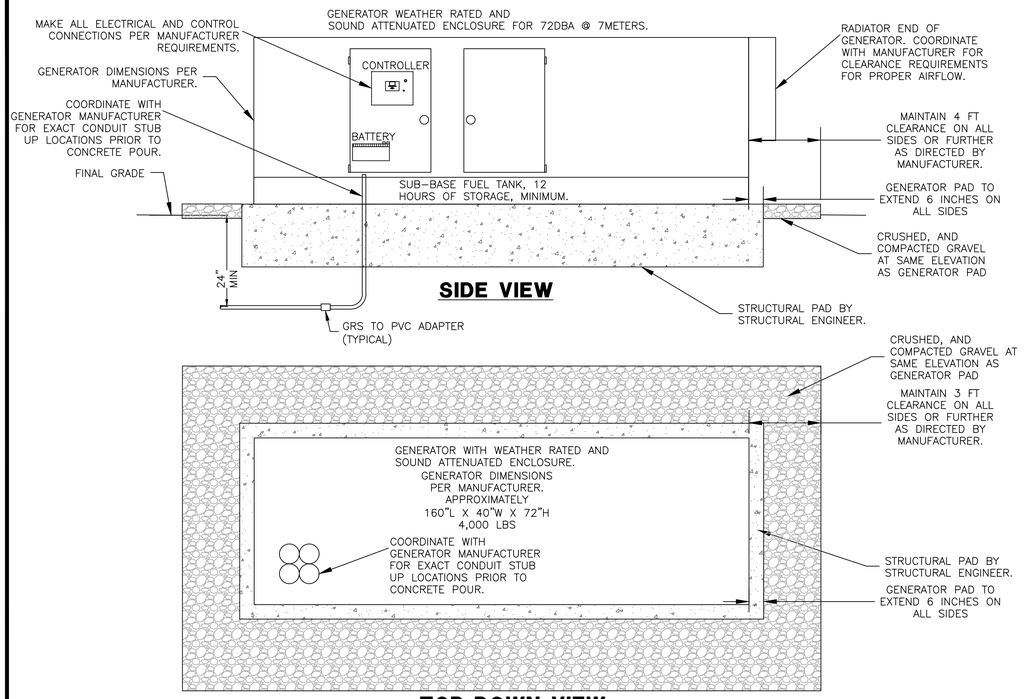

1 GENERATOR INSTALLATION DETAIL

NO SCALE

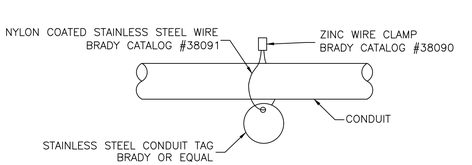

2 CONDUIT TAG DETAIL

NO SCALE

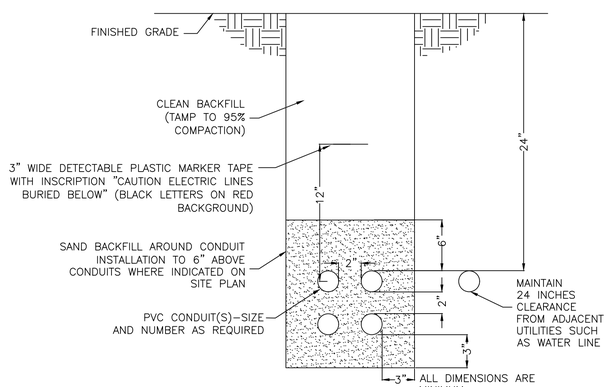

NOTE:

1) THIS CONDUIT DUCT BANK DETAIL SHALL BE REFERENCED FOR ALL UNDER GROUND CONDUIT INSTALLATIONS.

2) INSTALL CONDUIT SPACERS EVERY 6 FT. MAX., CARLON OR EQUAL.

3 CONDUIT DUCT BANK INSTALLATION DETAIL

NO SCALE

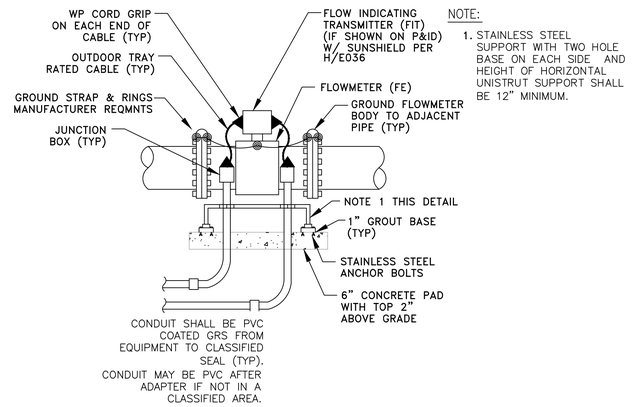

NOTE:

1. STAINLESS STEEL SUPPORT WITH TWO HOLE BASE ON EACH SIDE AND HEIGHT OF HORIZONTAL UNISTRUT SUPPORT SHALL BE 12" MINIMUM.

4 FLOWMETER DETAIL

NO SCALE

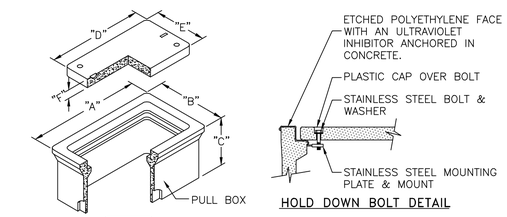

HOLD DOWN BOLT DETAIL

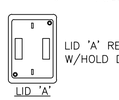

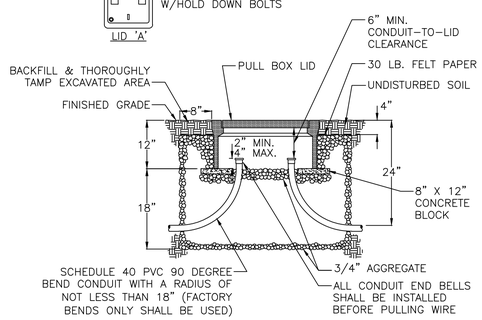

5 PULL BOX INSTALLATION DETAIL

NO SCALE

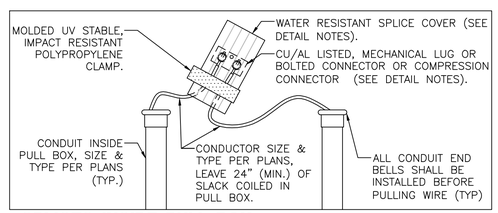

SPLICES INSIDE PULL BOX

DETAIL NOTES:

1. THE PULL BOX SHALL BE MADE OF A HIGH DENSITY REINFORCED CONCRETE MATERIAL WITH END & SIDE KNOCKOUTS, & NON-SETTLING SHOULDERS TO MAINTAIN GRADE, MANUFACTURED WITH APPROXIMATE DIMENSIONS AS SHOWN.
2. STEEL REINFORCEMENT SHALL BE AS REGULARLY USED IN STANDARD PRODUCTS OF THE RESPECTIVE MANUFACTURER.
3. COVER LETTERING SHALL BE 1" LETTERS CAST IN STANDARD MARKINGS: "ELECTRIC" OR "HIGH VOLTAGE" OR "COMMUNICATIONS". AS REQUIRED.
4. THE PULL BOX SHALL HAVE AN ETCHED POLYETHYLENE FACE WITH AN ULTRAVIOLET INHIBITOR ANCHORED IN CONCRETE.
5. ALL CABLE & CONDUCTOR SPLICES MADE USING CU/AL LISTED, MECHANICAL LUG OR BOLTED CONNECTOR OR COMPRESSION CONNECTOR, (TYCO ELECTRONICS, NSI INDUSTRIES, ILSCO OR APPROVED EQUAL). CONNECTION TO BE INSULATED & MADE WATER RESISTANT WITH TYCO ELECTRONICS GELCAP-SL, NSI INDUSTRIES ESSLK-2/0 OR 3M SCOTCHCAST SPLICE KIT 85 SERIES.

DATA TABLE

PULLBOX TYPE	PULLBOX LENGTH	PULLBOX WIDTH	PULLBOX HEIGHT	LID LENGTH	LID WIDTH	LID HEIGHT
	"A"	"B"	"C"	"D"	"E"	"F"
#3-1/2	19-3/4"	14-1/4"	12"	15-1/2"	10"	1-3/4"
#5	25-1/8"	15-5/8"	12"	20-3/4"	10-5/8"	2"
#7	35"	22"	12"	30-1/2"	17-1/2"	2"
#9	40-1/2"	28-1/4"	18"	35-1/2"	24"	3"

WRIGHT engineering corporation
ELECTRICAL ENGINEERING AND DESIGN
165 EAST CHILTON DRIVE
CHANDLER, ARIZONA 85225
PHONE: 480.497.5829
FAX: 480.497.5807
www.wrightengineering.us
Wright Project # 23319

CALL TWO WORKING DAYS BEFORE YOU DIG
602-263-1100
1-800-STAKE-IT
(OUTSIDE MARICOPA COUNTY)

NO	BY	DATE	REVISIONS	DATE	APP.

Registered Professional Engineer (Electrical) Certificate No. 73954 JASON BILLEDT 04-24-27 Expires 6-30-27

PREPARED BY: WRIGHT ENGINEERING
DESIGNED BY: JHB
DRAWN BY: XAG
CHECKED BY: JHB
SCALE: AS NOTED
DATE: NOV 2025
JOB NO. B614

TITLE: ELECTRICAL DETAILS III

JOB: TOWN OF JEROME WASTEWATER TREATMENT PLANT YAVAPAI CO. AZ

PREPARED BY: PACE Advanced Water Engineering
8123 E. VIA DE COMERCIO, BUILDING 3, SCOTTSDALE, CA 85258
P: (480) 991-3555 | www.pacewater.com

ISSUED FOR BID

SHEET E4.3
86 OF 99 SHEETS

JOB NO. B614

THESE DRAWINGS ARE THE PROPERTY OF P.A.C.E. AND SHALL NOT BE REPRODUCED IN ANY MANNER NOR BE USED FOR CONSTRUCTION UNLESS STAMPED "ISSUED FOR CONSTRUCTION".

N:\2025\25-Homes\WWTP\E4.3.dwg, 11x17, 1:1, 11/25/2025 at 10:45:47 PM

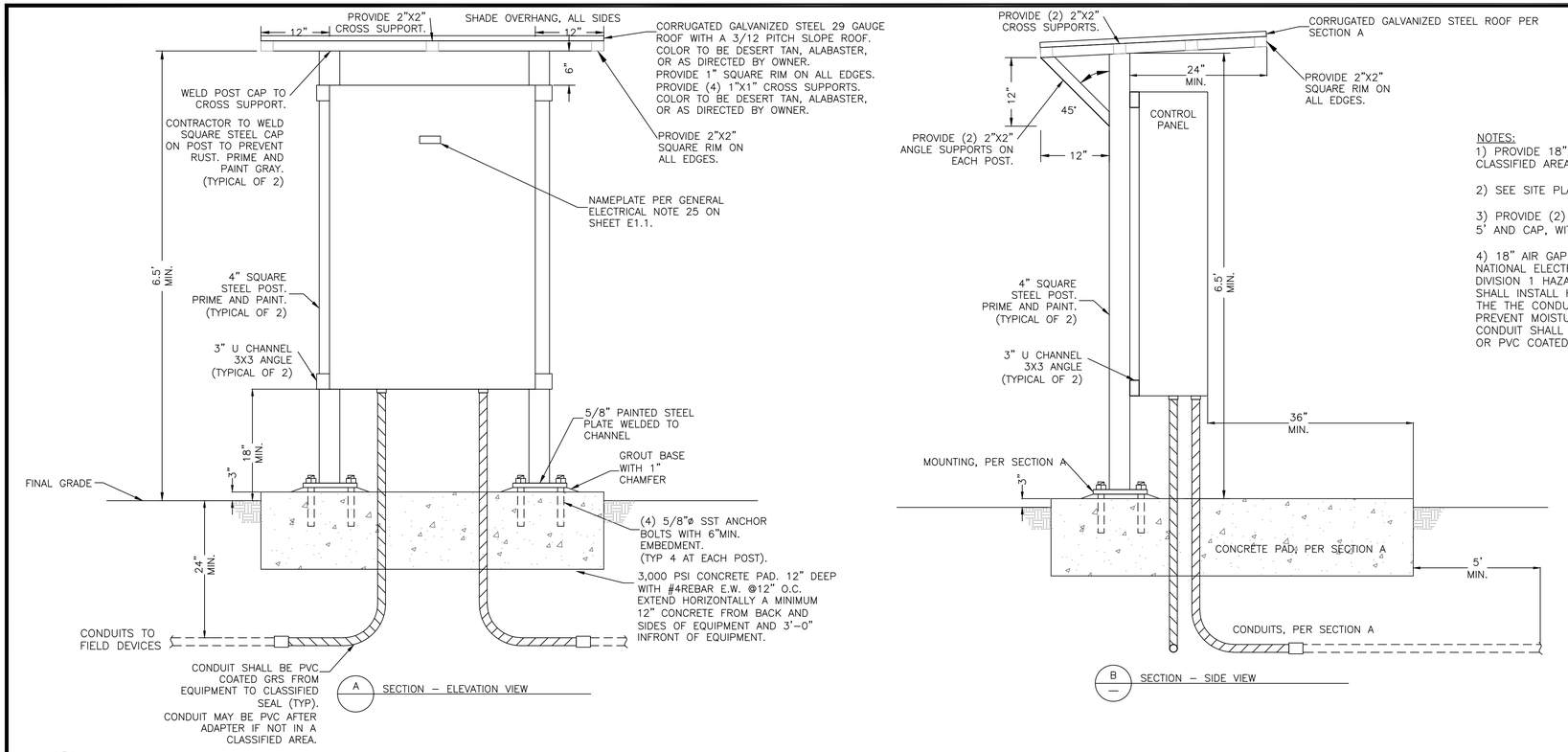

NOTES:
1) PROVIDE 18" AIR GAP WHEN CONDUITS ENTER CLASSIFIED AREAS.

2) SEE SITE PLAN FOR QUANTITY OF CONDUITS.

3) PROVIDE (2) 1.5" SPARE CONDUITS, EXTEND 5' AND CAP, WITH DETECTABLE PULL ROPE.

4) 18" AIR GAP SHALL CONFORM TO THE NATIONAL ELECTRICAL CODE FOR CLASS 1, DIVISION 1 HAZARDOUS AREA. CONTRACTOR SHALL INSTALL HERMETIC SEALS AT THE END OF THE THE CONDUIT RUNS INTO VAULT WALL TO PREVENT MOISTURE FROM ENTERING CONDUIT. CONDUIT SHALL BE CONTINUOUS GRS WRAPPED OR PVC COATED FROM WET WELL TO AIR GAP.

1 FREESTANDING CONTROL PANEL

NO SCALE

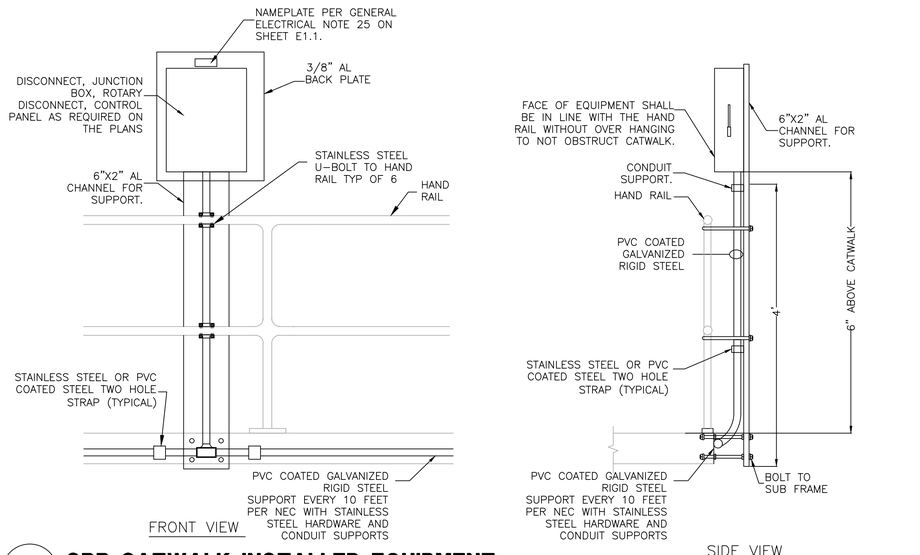

2 SBR CATWALK INSTALLED EQUIPMENT

NO SCALE

WRIGHT engineering corporation
ELECTRICAL ENGINEERING AND DESIGN
165 EAST CHILTON DRIVE
CHANDLER, ARIZONA 85225
PHONE: 480.497.5829
FAX: 480.497.5807
www.wrightengineering.us
Wright Project # 23319

CALL TWO WORKING DAYS BEFORE YOU DIG
602-263-1100
1-800-STAKE-IT
(OUTSIDE MARICOPA COUNTY)

NO	BY	DATE	REVISIONS	DATE	APP.

Registered Professional Engineer (Electrical) Certificate No. 73954 JASON RILEY LOTT Date Signed 9-30-25 Expires 9-30-27

PREPARED BY: WRIGHT ENGINEERING
DESIGNED BY: JHB
DRAWN BY: XAG
CHECKED BY: JHB
SCALE: AS NOTED
DATE: NOV 2025
JOB NO. B614

TITLE: ELECTRICAL DETAILS IV

JOB: TOWN OF JEROME WASTEWATER TREATMENT PLANT
YAVAPAI CO. AZ

PREPARED BY:
PACE
Advanced Water Engineering
8712 E. Via de Commercio, Suite 3A, Scottsdale, CA 85258
P: (480) 991-3595 | www.pacewater.com

ISSUED FOR BID

SHEET
E4.4
87 OF 99 SHEETS

JOB NO. B614

THESE DRAWINGS ARE THE PROPERTY OF P.A.C.E. AND SHALL NOT BE REPRODUCED IN any MANNER NOR BE USED FOR CONSTRUCTION UNLESS STAMPED "ISSUED FOR CONSTRUCTION".

H:\2025\2519-Jerome WWTP\2519-Elec Fac E4.4 - Hy pvdbl on 11/04/25 at 10:56 PM

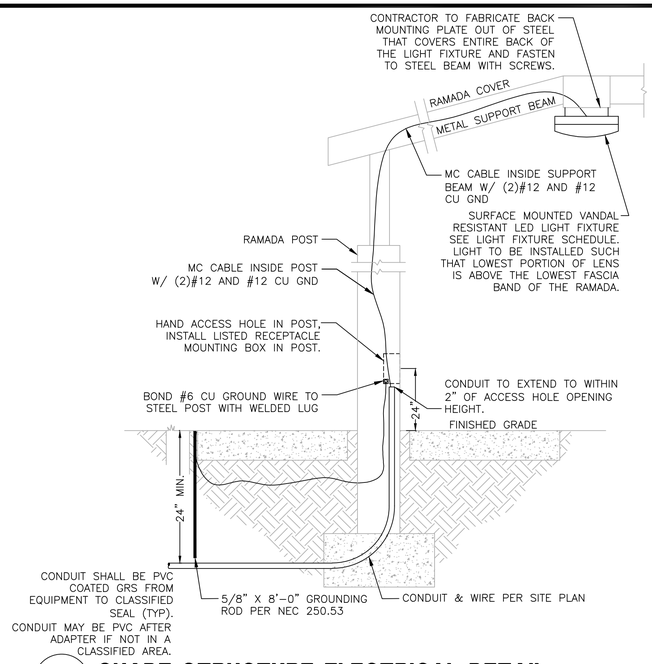

1 SHADE STRUCTURE ELECTRICAL DETAIL

NO SCALE

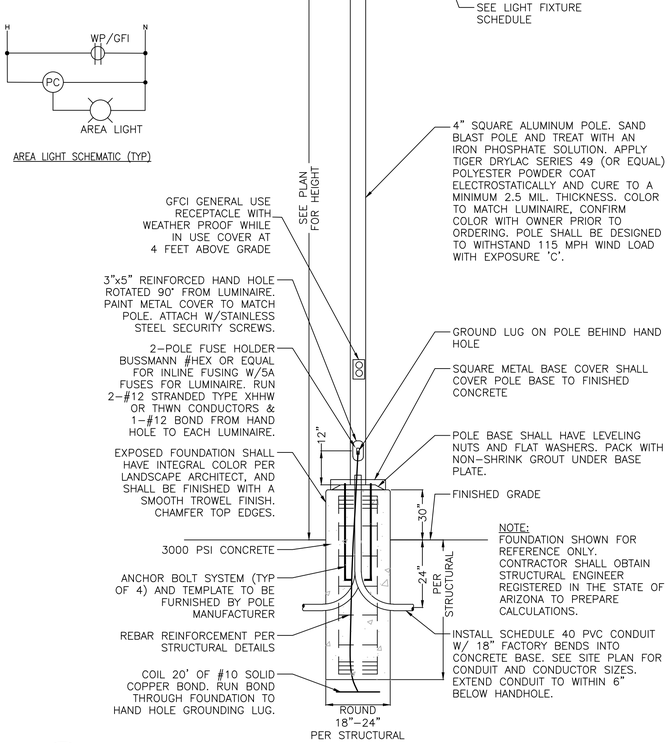

2 AREA LIGHT DETAIL

NO SCALE

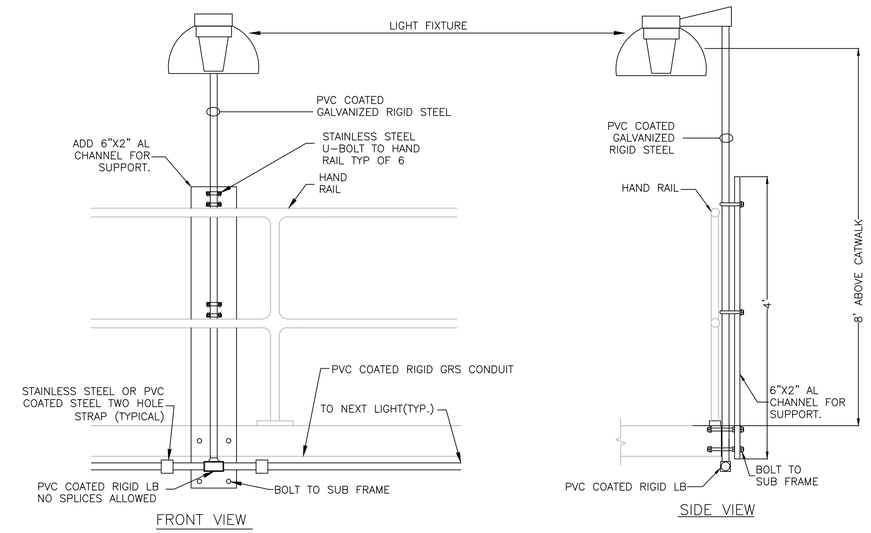

3 SBR LIGHT DETAIL

NO SCALE

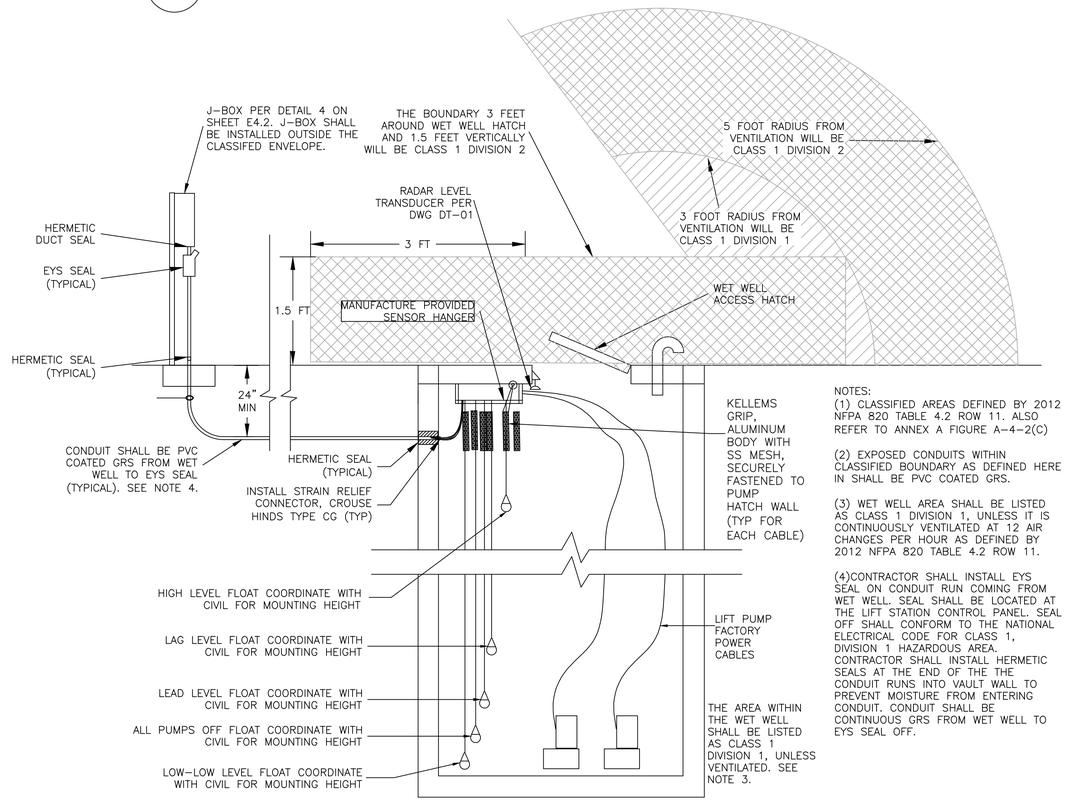

NOTES:
(1) CLASSIFIED AREAS DEFINED BY 2012 NFPA 820 TABLE 4.2 ROW 11. ALSO REFER TO ANNEX A FIGURE A-4-2(C)

(2) EXPOSED CONDUITS WITHIN CLASSIFIED BOUNDARY AS DEFINED HERE IN SHALL BE PVC COATED GRS.

(3) WET WELL AREA SHALL BE LISTED AS CLASS 1 DIVISION 1, UNLESS IT IS CONTINUOUSLY VENTILATED AT 12 AIR CHANGES PER HOUR AS DEFINED BY 2012 NFPA 820 TABLE 4.2 ROW 11.

(4)CONTRACTOR SHALL INSTALL EYS SEAL ON CONDUIT RUN COMING FROM WET WELL. SEAL SHALL BE LOCATED AT THE LIFT STATION CONTROL PANEL. SEAL OFF SHALL CONFORM TO THE NATIONAL ELECTRICAL CODE FOR CLASS 1, DIVISION 1 HAZARDOUS AREA. CONTRACTOR SHALL INSTALL HERMETIC SEALS AT THE END OF THE THE CONDUIT RUNS INTO VAULT WALL TO PREVENT MOISTURE FROM ENTERING CONDUIT. CONDUIT SHALL BE CONTINUOUS GRS FROM WET WELL TO EYS SEAL OFF.

4 LIFT STATION DETAIL

NO SCALE

NOTE
LEVEL CONTROLS SHOWN FOR REFERENCE ONLY, MOUNT LEVEL CONTROLS PER CIVIIL/MECHANICAL DRAWINGS.

WRIGHT engineering corporation
ELECTRICAL ENGINEERING AND DESIGN
165 EAST CHILTON DRIVE
CHANDLER, ARIZONA 85225
PHONE: 480.497.5829
FAX: 480.497.5807
www.wrightengineering.us
Wright Project # 23319

CALL TWO WORKING DAYS BEFORE YOU DIG
602-263-1100
1-800-STAKE-IT
(OUTSIDE MARICOPA COUNTY)

NO	BY	DATE	REVISIONS	DATE	APP.

Registered Professional Engineer (Electrical) Certificate No. 73954 JAMES BELLEDIT 3-24-25 Expires 9-30-27

PREPARED BY: WRIGHT ENGINEERING
DESIGNED BY: JHB
DRAWN BY: XAG
CHECKED BY: JHB
DATE: NOV 2025
JOB NO. B614
SCALE: AS NOTED

THESE DRAWINGS ARE THE PROPERTY OF P.A.C.E. AND SHALL NOT BE REPRODUCED IN ANY MANNER NOR BE USED FOR CONSTRUCTION UNLESS STAMPED "ISSUED FOR CONSTRUCTION".

TITLE
ELECTRICAL DETAILS V

JOB
TOWN OF JEROME
WASTEWATER TREATMENT PLANT
YAVAPAI CO. AZ

ISSUED FOR BID

PREPARED BY:
PACE
Advanced Water Engineering
8723 E. VIA DE COMERCIO, STE. 104, SCOTTSDALE, CA 85258
P. (480) 991-3595 | www.pacewater.com

SHEET
E4.5
88 OF 99 SHEETS

JOB NO. B614

K:\2025\2519-James WWTP\2519-E.dwg Tab: E4.5 by paceb on 11/04/25 at 8:49:40 PM

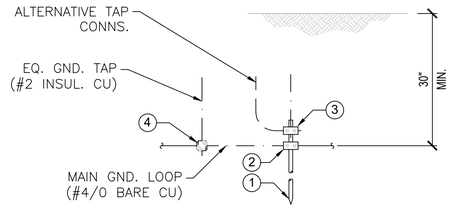

BILL OF MATERIALS		
NO.	DESCRIPTION	QTY
1	GROUND ROD, 3/4" DIA. x 10', COPPER-CLAD STEEL	1
2	GROUND ROD CONNECTOR (5/8"-3/4", 2/0 SOL-250) BURNDY #GAR6429 OR EQUAL.	1
3	GROUND ROD CONNECTOR (5/8"-3/4", #4 SOL-2/0) BURNDY #GAR6426 OR EQUAL.	1
4	GROUND CABLE CONNECTOR (#2/0-250 TO #4-#2/0) BURNDY #GX2926 OR EQUAL.	1

1 GROUND ROD INSTALLATION DETAIL
NO SCALE

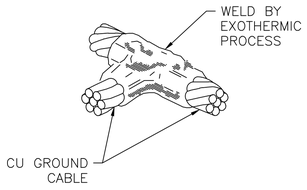

2 GROUND RING CONNECTION DETAIL
NO SCALE

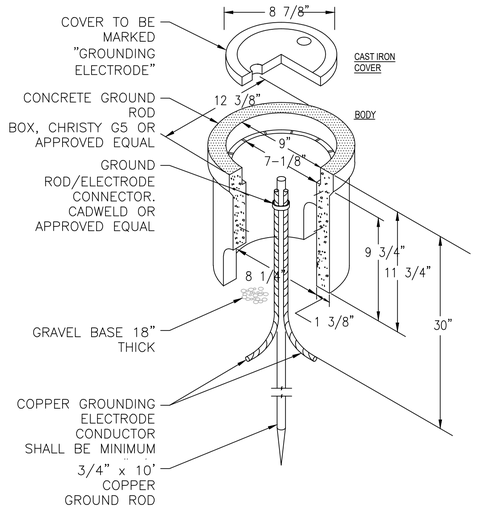

4 CONCRETE GROUND ROD INSPECTION DETAIL
NO SCALE

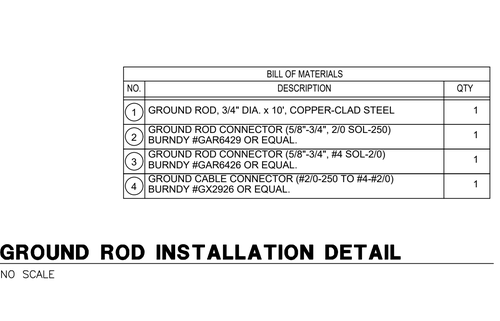

BILL OF MATERIALS		
NO.	DESCRIPTION	QTY
1	#4 RE-BAR, 1/2" DIA. – USE GND. CONN. BURNDY #GAR1126	1
2	#5 OR #6 RE-BAR, 5/8" OR 3/4" DIA. – USE GND. CONN. BURNDY #GAR6426	1
3	#7 OR #8 RE-BAR, 7/8" OR 1" DIA. – USE GND. CONN. BURNDY #GAR1426	1

3 GROUND ROD TO REBAR DETAIL
NO SCALE

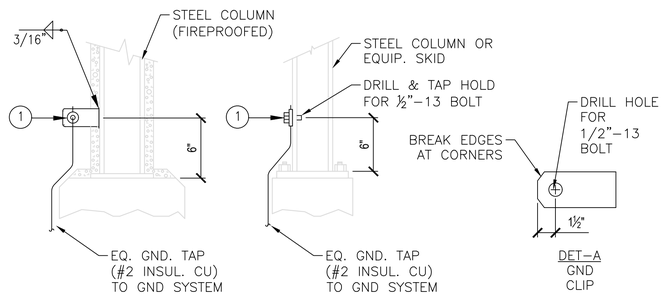

BILL OF MATERIALS		
NO.	DESCRIPTION	QTY
1	SERVIT POST CONNECTOR, 2/C, 1/2"–13 LONG STUD, #2–#2/0 W/ NUT & LOCKWASHER, BURNDY#K2C25B1	1
2	GROUND CLIP, MILD STEEL, 5" x 3" x 1/4" FIELD FABRICATE – SEE DET–A	1

5 GROUNDING CONNECTION - EQUIP/STEEL COLUMN
NO SCALE

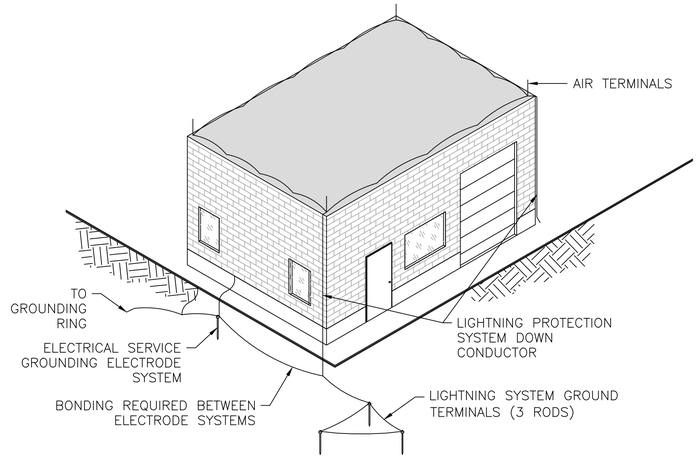

NOTES:
1. THE LIGHTNING ROD IS CONNECTED TO GROUND WITH AT LEAST TWO DOWN CONDUCTORS LOCATED ON OPPOSITE FACADES WHEREVER POSSIBLE.
2. THE DOWN CONDUCTORS MUST BE INSTALLED OUTSIDE THE BUILDING, AVOIDING THE PROXIMITY OF ELECTRICAL CABLES AND GAS. ITS PATH MUST BE AS STRAIGHT AS POSSIBLE, USING THE SHORTEST PATH TO EARTH, AVOIDING ANY SHARP BEND OR LIFT.
3. INSTALL IN ACCORDANCE WITH NFPA 780, NEC 250.60 AND NEC 250.106.
4. DETAIL SHOWN FOR REFERENCE ONLY.

6 LIGHTNING PROTECTION SYSTEM DETAIL
NO SCALE

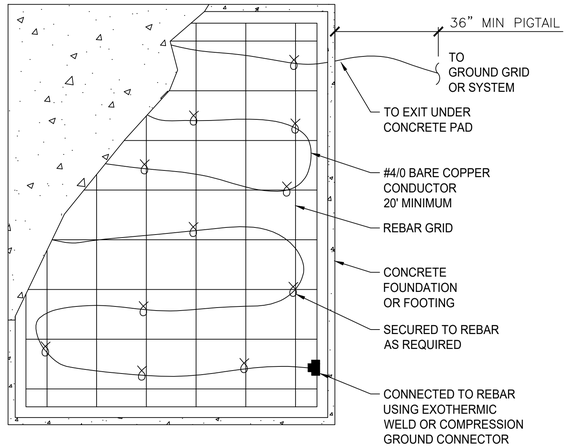

7 CONCRETE GROUNDING DETAIL
NO SCALE

WRIGHT engineering corporation
ELECTRICAL ENGINEERING AND DESIGN
165 EAST CHILTON DRIVE
CHANDLER, ARIZONA 85225
PHONE: 480.497.5829
FAX: 480.497.5807
www.wrightengineering.us
Wright Project # 23319

CALL TWO WORKING DAYS BEFORE YOU DIG
602-263-1100
1-800-STAKE-IT
(OUTSIDE MARICOPA COUNTY)

NO	BY	DATE	REVISIONS	DATE	APP.

Registered Professional Engineer (Electrical) Certificate No. 73954 JASON RILEY LOTT Date Signed 9-30-25 Expires 9-30-27

PREPARED BY: WRIGHT ENGINEERING
DESIGNED BY: JHB
DRAWN BY: XAG
CHECKED BY: JHB
SCALE: AS NOTED
DATE: NOV 2025
JOB NO. B614

TITLE: ELECTRICAL DETAILS VI

JOB: TOWN OF JEROME WASTEWATER TREATMENT PLANT YAVAPAI CO. AZ

PREPARED BY: PACE Advanced Water Engineering
8721 E. Via de Ventura, Suite 110, SCOTTSDALE, CA 85258
P: (480) 991-3595 | www.pacewater.com

ISSUED FOR BID

SHEET E4.6
89 OF 99 SHEETS

JOB NO. B614

THESE DRAWINGS ARE THE PROPERTY OF P.A.C.E. AND SHALL NOT BE REPRODUCED IN ANY MANNER NOR BE USED FOR CONSTRUCTION UNLESS STAMPED "ISSUED FOR CONSTRUCTION".

T:\2025\2519_Jerome WWTP\CAD\E4.6.dwg, Tab: E4.6, by jason on 11/04/25 at 3:56:31 PM

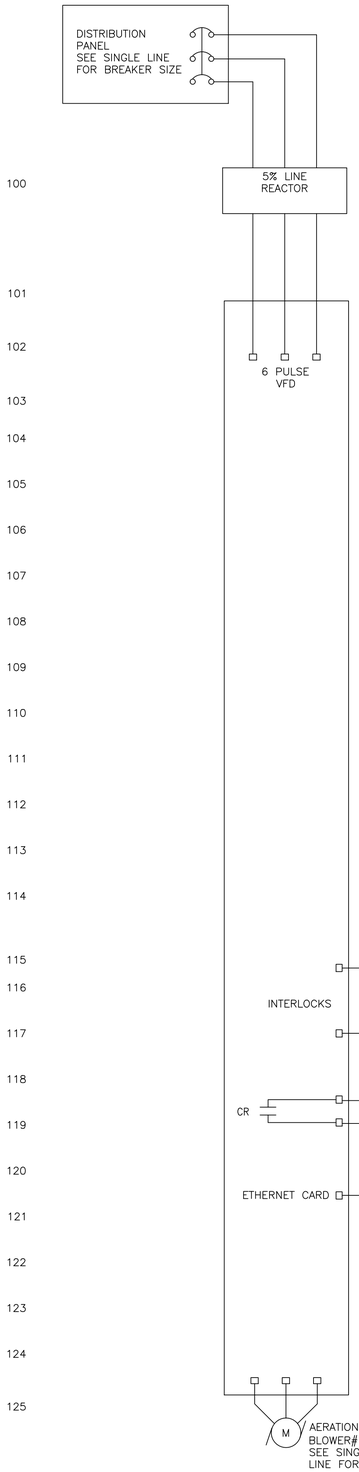

AERATION BLOWER #1 CONTROL SCHEMATIC

24VDC, 120VAC & 480VAC

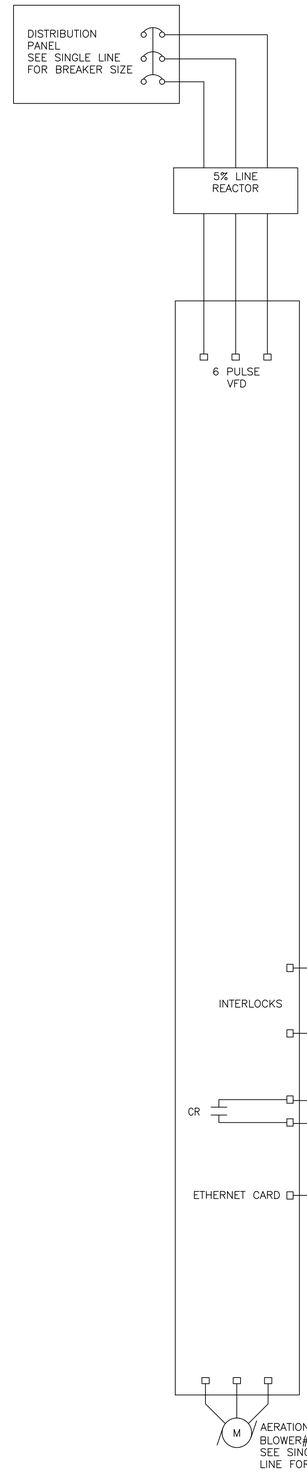

AERATION BLOWER #2 CONTROL SCHEMATIC

24VDC, 120VAC & 480VAC

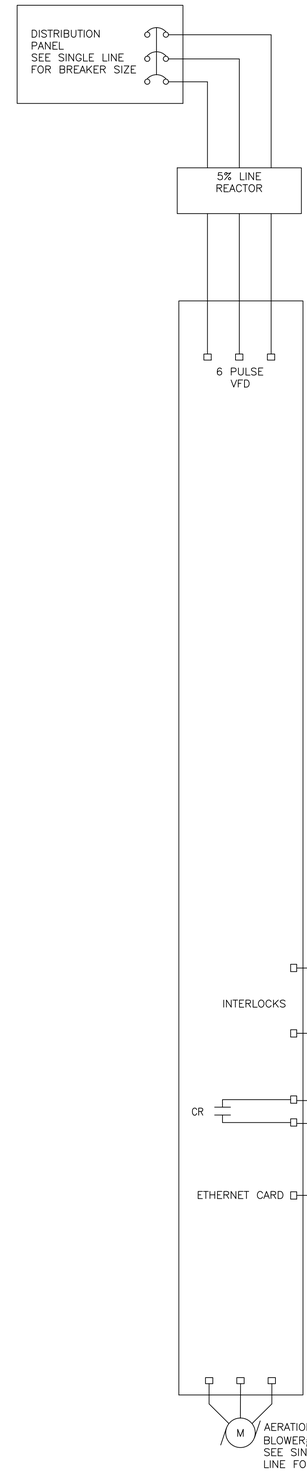

AERATION BLOWER #3 CONTROL SCHEMATIC

24VDC, 120VAC & 480VAC

WRIGHT engineering corporation
ELECTRICAL ENGINEERING AND DESIGN
165 EAST CHILTON DRIVE
CHANDLER, ARIZONA 85225
PHONE: 480.497.5829
FAX: 480.497.5807
www.wrightengineering.us
Wright Project # 23319

CALL TWO WORKING DAYS BEFORE YOU DIG
602-263-1100
1-800-STAKE-IT
(OUTSIDE MARICOPA COUNTY)

NO	BY	DATE	REVISIONS	DATE	APP.

Registered Professional Engineer (Electrical) Certificate No. 73954 JAMES RILLETT DYER Date Signed 9-30-25 Expires 9-30-27

PREPARED BY: WRIGHT ENGINEERING
DESIGNED BY: JHB
DRAWN BY: XAG
CHECKED BY: JHB
SCALE: AS NOTED
DATE: NOV 2025
JOB NO.: B614

THESE DRAWINGS ARE THE PROPERTY OF P.A.C.E. AND SHALL NOT BE REPRODUCED IN ANY MANNER NOR BE USED FOR CONSTRUCTION UNLESS STAMPED "ISSUED FOR CONSTRUCTION".

ISSUED FOR BID

TITLE: ELECTRICAL SCHEMATICS I

JOB: TOWN OF JEROME WASTEWATER TREATMENT PLANT YAVAPAI CO. AZ

PREPARED BY:
PACE
Advanced Water Engineering
8723 E. Via de Commercio, Suite A-104, Scottsdale, AZ 85258
P: (480) 991-3595 | www.pacewater.com

SHEET E5.1
90 OF 99 SHEETS

JOB NO. B614

I:\JOBS\2019\-Jerome WWTP\2019-E.dwg, 10/1/2025 9:41:11 AM, Jeff, 1:1

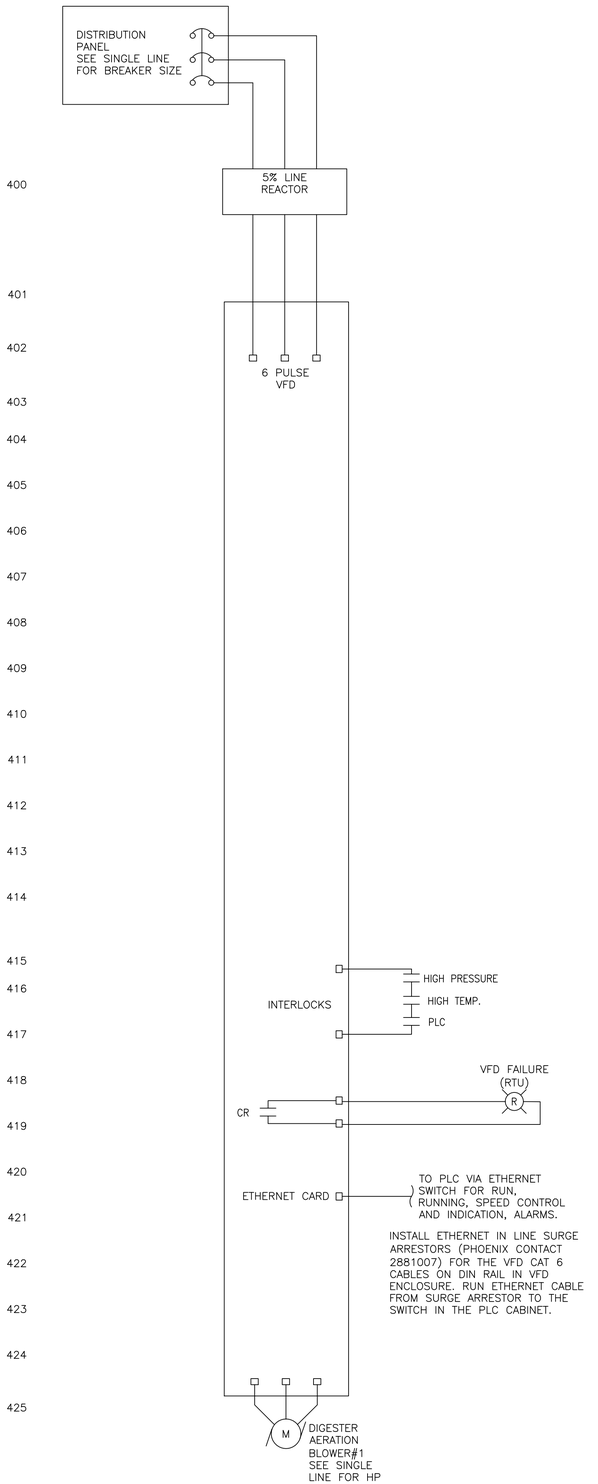

DIGESTER AERATION BLOWER #1 CONTROL SCHEMATIC

24VDC, 120VAC & 480VAC

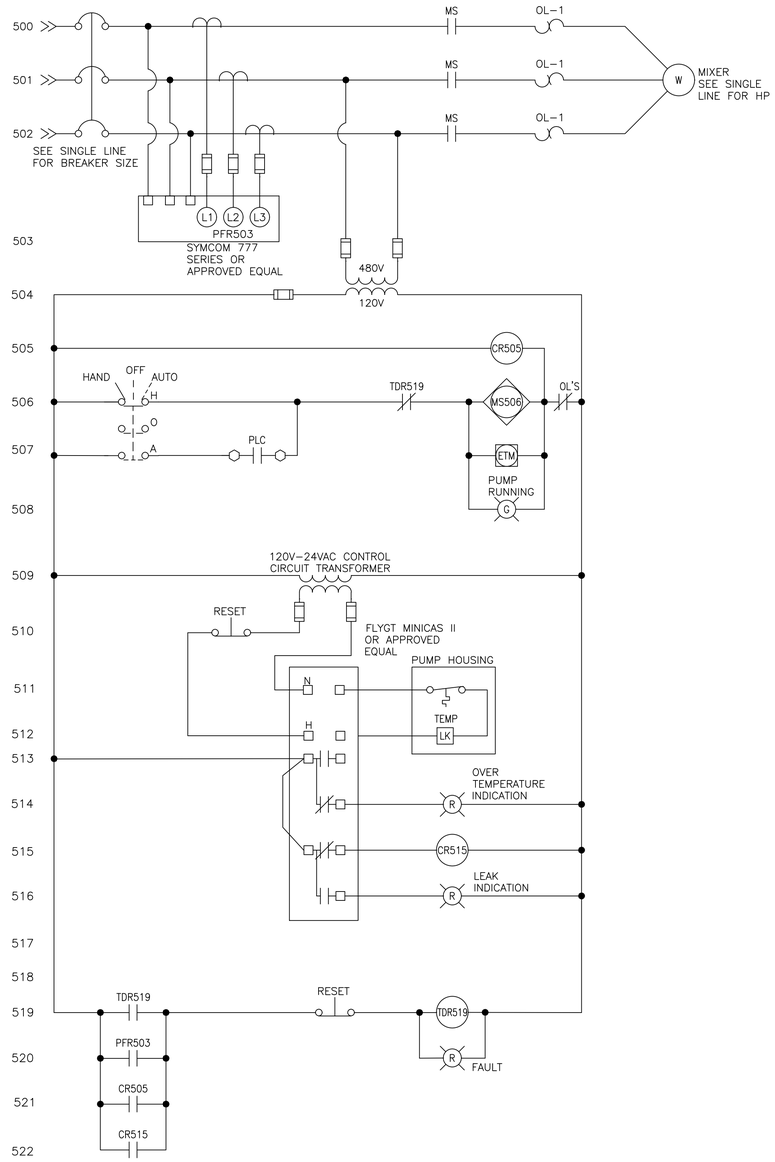

MIXER #1 CONTROL SCHEMATIC

120V

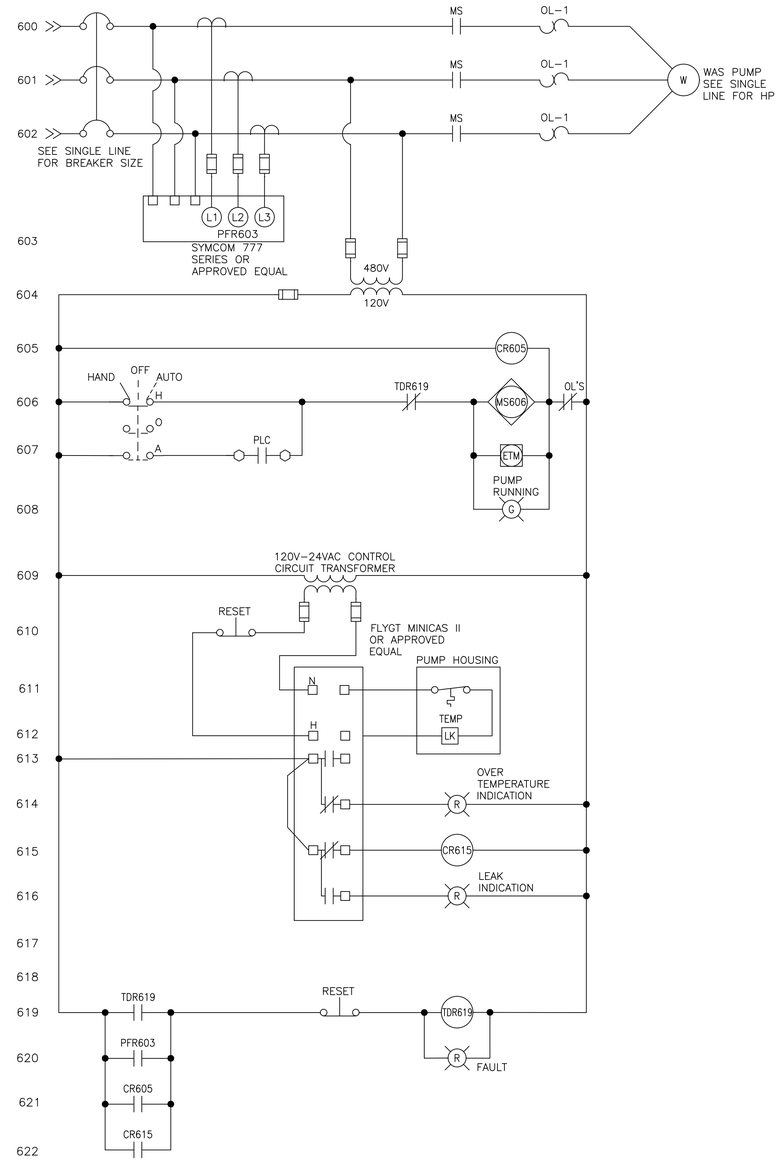

WAS PUMP #1 CONTROL SCHEMATIC

120V

NO	BY	DATE	REVISIONS	DATE	APP.

Registered Professional Engineer (Retired) Certificate No. 73954 JAMES BILLELIST ... Expires 9-30-27

PREPARED BY: WRIGHT ENGINEERING
DESIGNED BY: JHB
DRAWN BY: XAG
CHECKED BY: JHB
SCALE: AS NOTED
DATE: NOV 2025
JOB NO.: B614

THESE DRAWINGS ARE THE PROPERTY OF P.A.C.E. AND SHALL NOT BE REPRODUCED IN ANY MANNER NOR BE USED FOR CONSTRUCTION UNLESS STAMPED "ISSUED FOR CONSTRUCTION".

TITLE
ELECTRICAL SCHEMATICS II

JOB
TOWN OF JEROME
WASTEWATER
TREATMENT PLANT
YAVAPAI CO. AZ

ISSUED FOR BID

PREPARED BY:
PACE
Advanced Water Engineering
8723 E. VIA de COMERCIO, SUITE A, SCOTTSDALE, CA 85258
P. (480) 991-3595 | www.pacewater.com

SHEET
E5.2
91 OF 99 SHEETS

JOB NO. B614

WRIGHT engineering corporation
ELECTRICAL ENGINEERING AND DESIGN
165 EAST CHILTON DRIVE
CHANDLER, ARIZONA 85225
PHONE: 480.497.5829
FAX: 480.497.5807
www.wrightengineering.us
Wright Project # 23319

CALL TWO WORKING DAYS BEFORE YOU DIG
602-263-1100
1-800-STAKE-IT
(OUTSIDE MARICOPA COUNTY)

X:\2025\25-Current WWTP\25-E.dwg, Tab: E5.2, by jessie on 11/04/25 at 8:46:43 PM

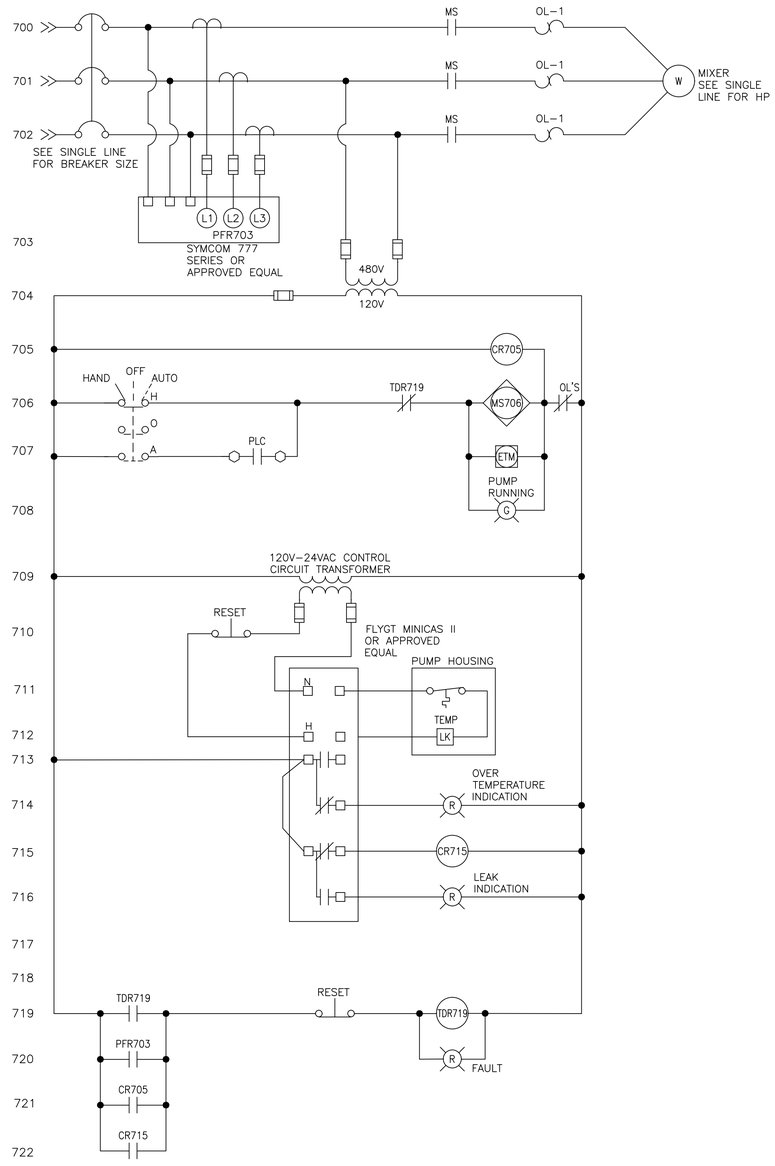

MIXER #2 CONTROL SCHEMATIC

120V

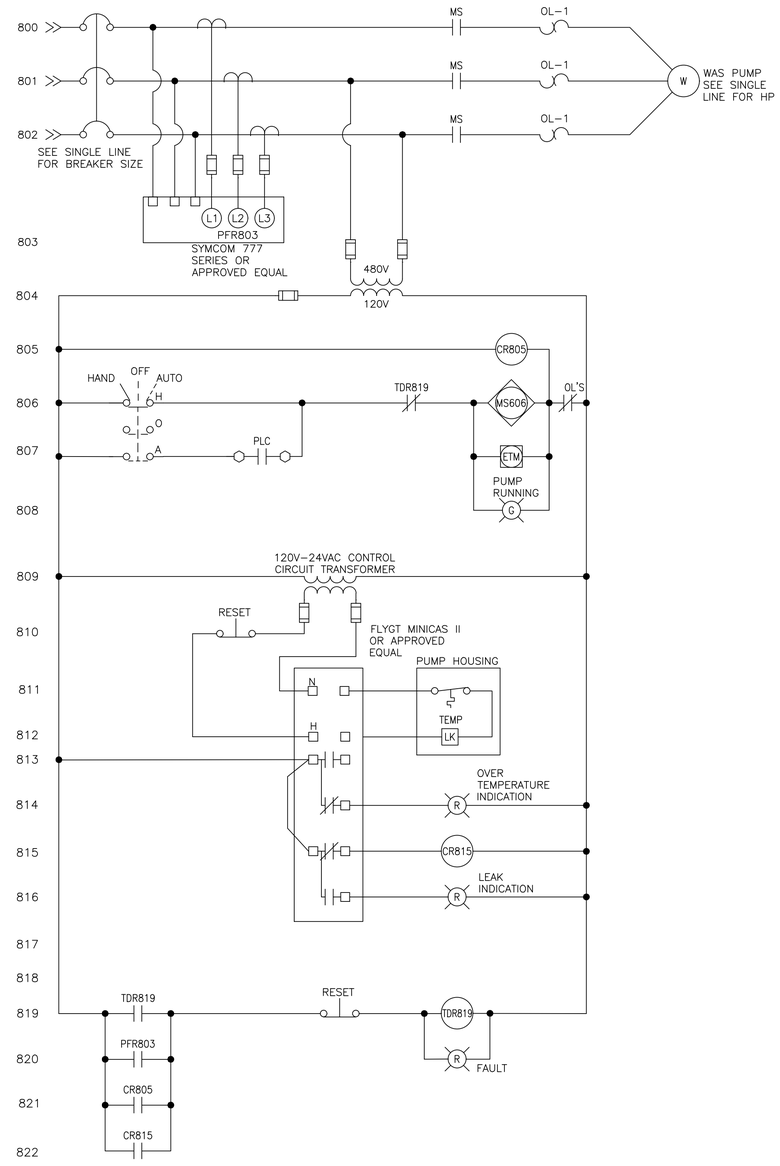

WAS PUMP #2 CONTROL SCHEMATIC

120V

NO	BY	DATE	REVISIONS	DATE	APP.

Registered Professional Engineer (Electrical)
Certificate No. 73954
JASON
BILLSTEDT
Date Signed 9-30-25
Expires 9-30-27

PREPARED BY: WRIGHT ENGINEERING
DESIGNED BY: JHB
DRAWN BY: XAG
CHECKED BY: JHB
DATE: NOV 2025
JOB NO.: B614
SCALE: AS NOTED

THESE DRAWINGS ARE THE PROPERTY OF P.A.C.E. AND SHALL NOT BE REPRODUCED IN ANY MANNER NOR BE USED FOR CONSTRUCTION UNLESS STAMPED "ISSUED FOR CONSTRUCTION".

TITLE
ELECTRICAL SCHEMATICS III

JOB
TOWN OF JEROME
WASTEWATER
TREATMENT PLANT
YAVAPAI CO. AZ

ISSUED FOR BID

PREPARED BY:
PACE
Advanced Water Engineering
8723 E. VIA DE COMMERCIO, 1ST FLOOR, SCOTTSDALE, CA 85258
P.: (408) 991-3595 | www.pacewater.com

SHEET
E5.3
92 OF 99 SHEETS

JOB NO. B614

WRIGHT engineering corporation
ELECTRICAL ENGINEERING AND DESIGN
165 EAST CHILTON DRIVE
CHANDLER, ARIZONA 85225
PHONE: 480.497.5829
FAX: 480.497.5807
www.wrightengineering.us
Wright Project # 23319

CALL TWO WORKING DAYS
BEFORE YOU DIG
602-263-1100
1-800-STAKE-IT
(OUTSIDE MARICOPA COUNTY)

X:\2025\25-Current WWTP\25-E.dwg, Tab: E5.3, by jason.xin 11/04/25 at 01:40 PM

INSTRUMENT IDENTIFICATION LETTERS (FSS)

	FIRST – LETTER (F)		SUCCEEDING – LETTERS (SS)		
	MEASURED OF INITIATING VARIABLE	MODIFIER	READOUT PASSIVE FUNCTION	OUTPUT FUNCTION	MODIFIER
A	ANALYSIS		ALARM		
B	BURNER, COMBUSTION		USER'S CHOICE	USER'S CHOICE	USER'S CHOICE
C	CONDUCTIVITY			CONTROLLER	
D	DENSITY	DIFFERENTIAL			
E	VOLTAGE		SENSOR, PRIMARY ELEMENT		
F	FLOW RATE	RATIO (FRACTION)			
G	GAUGE, GENERAL		GLASS VIEWING DEVICE		
H	HAND				HIGH, OPENED
I	CURRENT (ELEC.)		INDICATING, INDICATOR		
J	POWER		SCAN		
K	TIME, TIME SCHEDULE	TIME RATE OF CHANGE		CONTROL STATION	
L	LEVEL		LIGHT		LOW, CLOSED
M	MOISTURE, MOTION	MOMENTARY			MIDDLE
N	INTRUSION, STATUS	MOMENTARY	STATUS	USER'S CHOICE	USER'S CHOICE
O	OPERATOR, TORQUE		ORIFICE, RESTRICTION		USER'S CHOICE
P	PRESSURE, VACUUM		POINT (TEST) CONNECTION		
Q	QUANTITY	INTEGRATE, TOTALIZE			
R	RESET, RADIATION		RECORD OR PRINT		
S	SPEED, FREQUENCY	SAFETY		SWITCH	SLOW
T	TEMPERATURE			TRANSDUCER, TRANSMITTER	TEST
U	MULTIVARIABLE		MULTIFUNCTION	MULTIFUNCTION	MULTIFUNCTION
V	VIBRATION, MECH. ANALYSIS			VALVE, DAMPER LOUVER	
W	WEIGHT, FORCE		WELL		
X	SWITCH	X AXIS	UNCLASSIFIED	UNCLASSIFIED	UNCLASSIFIED
Y	EVENT, STATE, PRESENCE	Y AXIS	UNCLASSIFIED	RELAY, COMPUTE, CONVERT	
Z	POSITION DIMENSION	Z AXIS		DRIVER, ACTUATOR, UNCLASSIFIED FINAL CONTROL ELEMENT	

LINE NUMBERING

00" – INFLT – 001 (EXAMPLE)
- SEQUENTIAL LINE NO.
- FLUID CODE
- NOMINAL LINE SIZE

EQUIPMENT NUMBERING

F SS – PP T NN (EXAMPLE)
- ITEM NUMBER
- SERIES (TRAIN) LOCATION
- PROCESS LOCATION
- SUCCEEDING LETTERS (INSTRUMENT ID)
- FIRST LETTER (INSTRUMENT ID)

EXAMPLE:
LT-04032 = SBR TANK #2 LEVEL TRANSDUCER

PROCESS LOCATION (PP)		SERIES LOCATION (TT)	
00	GENERAL/MISCELLANEOUS	0	SHEET 0
01	FIELD	1	SHEET 1
02	POTABLE WATER	2	SHEET 2
03	HEADWORKS	3	SHEET 3
04	SBR AERATION	4	SHEET 4
05	SBR PROCESS	5	SHEET 5
06	DISINFECTION	6	SHEET 6
07	RETURN PS	7	SHEET 7
08	DEWATERING	8	SHEET 8

FLUID CODE ABBREVIATION		EQUIPMENT NUMBERS	
		EQUIPMENT ABBREVIATIONS	# STARTING AT
BP	BYPASS		
BW	BACKWASH		
CDS	CHEMICAL DOSING		
CVR	CONVEYOR	PUMPS (PMP)	00–09
DR	DRAIN	MOTORS (M/MXR/BLR)	10–19
EFFLT	EFFLUENT	VALVES (XV/V/SV)	20–29
EXH	EXHAUST/EXHAUST FAN	LEVEL INST (LT/LS)	30–39
FA	FOUL AIR	FLOW INST (FT/FS/FE/FIT)	40–49
FLTRT	FILTRATE	PRESSURE INST (PT/PS/PG)	50–59
GRT	GRIT	ANALYTICAL (AT)	60–69
INFLT	INFLUENT	MEMBRANE (SMU)	70–79
MLSS	MIX LIQUOR	BUBBLE DIFFUSER (XBD)	80–85
OF	OVERFLOW	MISCELLANEOUS (MISC)	90–99
PA	PROCESS AIR		
PW	POTABLE WATER		
RAS	RETURN ACTIVATED SLUDGE		
RECYC	RECYCLE		
RET	RETURN		
RNS	RINSE		
RW	RECLAIMED WATER		
SECPR	SECONDARY PROCESS		
SD	SLUDGE DISCHARGE		
SNT	SUPERNATANT		
SWR	SEWER		
TERT	TERTIARY		
TW	TREATED WATER		
WAS	WASTE ACTIVATED SLUDGE		
WTR	WATER		
WW	WASTE WATER		

GENERAL INSTRUMENT OR FUNCTION SYMBOLS

	FIELD MOUNTED	PRIMARY LOCATION ACCESSIBLE TO OPERATOR	PRIMARY LOCATION INACCESSIBLE TO OPERATOR	AUXILIARY LOCATION ACCESSIBLE TO OPERATOR
DISCRETE INSTRUMENTS	○	⊖	⊖	⊖
SHARED DISPLAY SHARED CONTROL	○	⊖	⊖	⊖
COMPUTER FUNCTION	⬡	⬡	⬡	⬡
PROGRAMMABLE LOGIC CONTROL	◇	◇	◇	◇

HARDWARE INTERLOCK (I)

PLC "SOFT" INTERLOCK (I)

VALVE SYMBOLS

NC NO
- GATE VALVE
- GATE VALVE
- BALL VALVE
- DIAPHRAGM VALVE
- PLUG VALVE
- 3-WAY BALL VALVE
- NEEDLE VALVE/KNIFE GATE
- MUD VALVE
- FLANGED BUTTERFLY VALVE
- LUGGED BUTTERFLY VALVE
- CHECK VALVE
- DOUBLE LEAF CHECK VALVE
- WEIR GATE/TELESCOPE VALVE
- STOP LOG/GATE
- SLUICE/SLIDE GATE

VALVE ACTUATORS

- DIAPHRAGM ACTUATOR
- MOTOR ACTUATOR (M)
- SOLENOID ACTUATOR (S)
- CYLINDER ACTUATOR
- LEVER
- HAND WHEEL
- CHAIN WHEEL

RELIEF DEVICES

- AIR/PRESSURE RELIEF
- VACUUM RELIEF
- RUPTURE DISK FOR PRESSURE RELIEF
- RUPTURE DISK FOR VACUUM RELIEF

REGULATORS

- PRESSURE REDUCING
- BACK PRESSURE
- REGULATOR WITH EXTERNAL PILOT
- DIFFERENTIAL PRESSURE

PIPING SYMBOLS

- Y STRAINER
- BLIND FLANGE
- FUNNEL
- CONCENTRIC REDUCER
- ECCENTRIC REDUCER
- EDUCTOR
- WELDED CAP
- WELDED PIPE END
- SCREWED CAP
- UNION
- CAMLOCK FITTING
- FLEXIBLE LINE
- SPECTACLE BLIND
- EXPANSION JOINT
- TP XX — TIE-IN POINT
- FLEX JOINT

MECHANICAL EQUIPMENT

- METERING PUMP
- CENTRIFUGAL PUMP OR BLOWER
- SUBMERSIBLE PUMP
- TURBINE PUMP
- ROTARY BLOWER
- MIXER
- PROGRESSIVE CAVITY PUMP
- AERATOR
- EXHAUST FAN
- VERTICAL MULTI-STAGE PUMP
- ROTARY LOBE PUMP
- DECANTER
- ULTRA SONIC LEVEL TRANSMITTER
- CHEMICAL INJECTOR
- FLOW METER OR MOTOR
- ROTOMETER
- MAZZI INJECTOR
- VORTEX SHEDDING
- SONIC
- GRINDER
- STATIC MIXER
- SILENCER
- RADAR LEVEL TRANSMITTER
- AV SENSOR
- HORN/STROBE LIGHT (H/S)

NOTE: ALL PRESSURE GAUGES AND OTHER SMALL PROCESS MECHANICAL INSTRUMENT EQUIPMENT SHALL BE SUPPLIED WITH ISOLATION VALVES AND ADDITIONAL APPURTENANCES (E.G. PRESSURE PULSATION DAMPENERS/SNUBBERS) AS REQUIRED FOR PROPER OPERATION

ABBREVIATIONS

ACP	ACCESS CONTROL PANEL	NTU	TURBIDITY
AE	ANALYTICAL SENSOR	OC	ODOR CONTROL
AI	ANALOG INPUT	OCA	OPEN–CLOSE–AUTO
AIT	ANALYTICAL INDICATOR TRANSMITTER	OCR	OPEN–CLOSE–REMOTE
AMP	AMPERE	OFS	OFF SPEC.
AO	ANALOG OUTPUT	OIT	OPERATOR INTERFACE TERMINAL
AT	ANALYTICAL TRANSMITTER	OO	ON/OFF (MAINTAINED)
ATS	AUTOMATIC TRANSFER SWITCH	OOA	ON–OFF–AUTO
AV	AIR VELOCITY	OOR	ON–OFF–REMOTE
BLR	BLOWER	OSC	OPEN–STOP–CLOSE
CB	CIRCUIT BREAKER	PE	PRESSURE SENSOR
CBL	COARSE BUBBLE DIFFUSER	PG	PRESSURE GAUGE
CE	CONDUCTIVITY SENSOR (TDS)	PH	POTENTIAL OF HYDROGEN
CFR	CHEMICAL FEEDER	PI	PRESSURE INDICATOR / PULSE INPUT
CG	COMBUSTIBLE GASES	PID	PROPORTIONAL–INTEGRAL–DERIVATIVE
CHV	CHECK VALVE	PIT	PRESSURE INDICATOR TRANSMITTER
CL2	CHLORINE	PLC	PROGRAMMABLE LOGIC CONTROLLER
CMP	COMPACTOR	PMP	PUMP
CON	CONVEYOR	PNL	PANEL
CWC	COMPACTOR/WASHER/CONVEYOR	PO	PULSE OUTPUT
DCS	DISTRIBUTED CONTROL SYSTEM	PPG	POUNDS PER GALLON
DI	DIGITAL INPUT	PPH	POUNDS PER HOUR
DO	DISSOLVED OXYGEN / DIGITAL OUTPUT	PPM	PARTS PER MILLION
DRY	BIOSOLIDS DRYER	PRESS	PRESSURE
DSS	DISTRIBUTION SWITCHBOARD SECTION	PRV	PRESSURE RELIEF OR REDUCING VALVE
DWG	DRAWING	PSH	PRESSURE SWITCH HIGH
EST	EMERGENCY STOP	PSI	POUNDS PER SQUARE INCH
ETM	ELAPSED TIME METER	PSL	PRESSURE SWITCH LOW
EXIST	EXISTING	PT	PRESSURE TRANSMITTER
FBD	FINE BUBBLE DIFFUSER	PV	PROCESS VARIABLE
FC	FAIL CLOSED	REM	REMOTE
FCV	MODULATING CONTROL VALVE	RF	RADIO FREQUENCY
FE	FLOW SENSOR	RIO	REMOTE INPUT–OUTPUT
FeCL2	FERROUS CHLORIDE	RST	RESET
FI	FLOW INDICATOR	RTU	REMOTE TELEMETRY UNIT
FIT	FLOW INDICATOR TRANSMITTER	SES	SERVICE ENTRANCE SECTION
FR	FORWARD–REVERSE	SG	SLUICE GATE
FS	FINE SCREEN / FULL SPEED	SLC	SINGLE LOOP CONTROLLER
FSL	FLOW SWITCH LOW	SLOS	START–LOCK–OFF–STOP
FT	FLOW TRANSMITTER	SO2	SULFUR D
GDR	GRINDER	SMU	SUBMERGED MEMBRANE UNIT
GPD	GALLONS PER DAY	SP	SETPOINT
GPH	GALLONS PER HOUR	SPD	SPEED
GPM	GALLONS PER MINUTE	SPR	SPARE
GRC	GRIT CLASSIFIER	SS	START/STOP (MAINTAINED)
H_2S	HYDROGEN SULFIDE	SSS	SOLID STATE STARTER (SOFT START)
HMI	HUMAN MACHINE INTERFACE	STG	MANUAL STOP GATE
HOA	HAND–OFF–AUTO	SUG	SLUICE GATE
HOR	HAND–OFF–REMOTE	SV	SOLENOID VALVE
JB	JUNCTION BOX	TC	TABLET CHLORINATOR
KGV	KNIFE GATE VALVE	TDS	TOTAL DISSOLVED SOLIDS
LAN	LOCAL AREA NETWORK	TE	TEMPERATURE SENSOR
LCP	LOCAL CONTROL PANEL	TG	TEMPERATURE GAUGE
LE	LEVEL SENSOR	TI	TEMPERATURE INDICATOR
LIT	LEVEL INDICATOR TRANSMITTER	TIT	TEMPERATURE INDICATOR TRANSMITTER
LOS	LOCK–OFF–STOP	TNK	TANK
LR	LOCAL / REMOTE	TS	TEMPERATURE SWITCH
LSH	LEVEL SWITCH HIGH	TSH	TEMPERATURE SWITCH HIGH
LSHH	LEVEL SWITCH HIGH HIGH	TT	TEMPERATURE TRANSMITTER
LSL	LEVEL SWITCH LOW	TV	TELESCOPING VALVE
LSLL	LEVEL SWITCH LOW LOW	UPS	UNINTERRUPTIBLE POWER SUPPLY
LSM	LEVEL SWITCH MEDIUM	UVU	ULTRAVIOLET UNIT
LT	LEVEL TRANSMITTER	V	MANUAL VALVE
MCAS	MINI CONTROL AND STATUS	VFD	VARIABLE FREQUENCY DRIVE
MCC	MOTOR CONTROL CENTER	WE	WEIR
ME	MOISTURE SENSOR	WEG	WEIR GATE
MGD	MILLION GALLONS PER DAY	WR	ADJUSTABLE WEIR
MGL	MILLIGRAM PER LITER	XV	AUTOMATED OPEN/CLOSE VALVE/GATE
MOT	MOTOR	ZS	SWITCH POSITION
MS	MOTOR STARTER		
MTU	MASTER TELEMETRY UNIT		
MXR	MIXER		
NaHSO3	SODIUM BISULFITE		
NaOCL	SODIUM HYPOCHLORITE		

LINE CODES

- MAJOR PROCESS LINE
- MINOR PROCESS LINE
- AIR
- ELECTRICAL
- PLC TO HMI COMMUNICATION
- AUTO–DIALER AND PRIORITY LEVEL

00"–XXX — LINE SIZE & NUMBER

PROCESS CONTINUATION WITHIN SCOPE

INSTRUMENT NUMBERING

FSS NPPNNN — XX – DEVICE FUNCTION
- FIRST LETTER (INSTRUMENT ID)
- SUCCEEDING LETTERS (INSTRUMENT ID)
- EQUIPMENT NUMBER

LINE NUMBER GROUPS

000	OVERFLOW/ BYPASS/ DRAIN/ SUPERNATANT/SCNG
100	INFLUENT/ MIX LIQUOR/ SECONDARY EFFLUENT / EFFLUENT
200	TERTIARY/ REUSE WATER/ BACKWASH/ RECYCLE WATER
300	PERMEATE/ FILTRATE/ CENTRATE
400	PROCESS AIR
500	CHEMICAL DOSING/ POLYMER
600	FOUL AIR
700	WATER/ TREATED WATER/ FILTERED WATER
800	RAS/ SOLIDS
900	WAS/ SCUM/ WASTE WATER/ RAW WATER

EQUIPMENT SUPPLIED BY IDENTIFIER

✳ AQUA–AEROBICS

NO	BY	DATE	REVISIONS	DATE	APP.

THESE DRAWINGS ARE THE PROPERTY OF P.A.C.E. AND SHALL NOT BE REPRODUCED IN ANY MANNER NOR BE USED FOR CONSTRUCTION UNLESS STAMPED 'ISSUED FOR CONSTRUCTION'.

Registered Professional Engineer (Civil) CERTIFICATE NO. 70097 Signed 12/31/25 ARIZONA, U.S.A. Expires 12/31/28

PREPARED BY: PACE
DESIGNED BY: NE
DRAWN BY: DS, WW
CHECKED BY: TP
SCALE: AS NOTED
DATE: NOV 2025
JOB NO.: B614

TITLE: **P&ID GENERAL NOTES**

JOB: TOWN OF JEROME WASTEWATER TREATMENT PLANT — YAVAPAI CO. AZ

100% ISSUED FOR BID

PREPARED BY: TAYLOR B. PIERCE — R.C.E 70097 — DATE

PACE
Advanced Water Engineering
8723 E. Via de Ventura, Suite F-200, SCOTTSDALE, CA 85258
P: (480) 991-3995 | www.pacewater.com

SHEET **I0.0**
93 OF 99 SHEETS

JOB NO. B614

W:\B614\Engineering\B614-30\sheets\B614-I0.1 GENERAL.dwg - Tab: B614-I0.0 GENERAL - by nsddingson on 12/17/25 at 9:55:33 AM

AUTO-DIALER

PRIORITY NO. ALARM
NOTIFICATION

SCREEN

FAIL ALARM YA 03010

FAIL Y1 03010

HMI

HMI

FAIL Y1 03010

SBR CONTROL PANEL (VENDOR)

SBR CONTROL PANEL (VENDOR)

(480 VAC) CB

MCC

MCC

MS 03010 POT/HIM
HS 03010A HOA
MS 03010B POT/HIM
HS 03010B HOA
MS 03010C POT/HIM
HS 03010C HOA
G RUNNING
Y FAULT
ETM
HEADWORKS CONTROL PANEL

SEWER MAIN FROM COLLECTION SYSTEM
12"-SWR-101

ROCK TRAP

8"-SWR-102

EST 03010A
M-03010A
LE-03031
LE-03032
EST 03010B
M-03010B
LE-03033
LE-03034

PV-03021
PV-03022

CLIMBER BAR SCREENS

10"-INFLT-103
A SCREENED INFLUENT TO SBR REF SHT I1.1

ZSO 03023
ZSC 03023
HS 03023
SV 03023

POTABLE WATER FROM TOWN
2"-WTR-701

V-02020

A DRYING BED LIFT STATION RETURN REF SHT I1.4
3"-DR RET-001

CV-07020

BV-07021

EST 03010C
M-03010C

1"-DR-005

DISPOSAL

HEADWORKS

W:\B614\Engineering\B614-30sheets\B614-I1.1.dwg - Tab: I1.0 - by naddington on 11/17/25 at 9:55:57 AM

NO	BY	DATE	REVISIONS	DATE	APP.

Registered Professional Engineer (Civil)
CERTIFICATE NO. 70097
Timothy B. Pierce
Signed
ARIZONA, U.S.A.
Expires 12/31/28

PREPARED BY: PACE
DESIGNED BY: NE
DRAWN BY: DS, WW
CHECKED BY: TP
SCALE: AS NOTED
DATE: NOV 2025
JOB NO: B614

THESE DRAWINGS ARE THE PROPERTY OF P.A.C.E. AND SHALL NOT BE REPRODUCED IN ANY MANNER NOR BE USED FOR CONSTRUCTION UNLESS STAMPED "ISSUED FOR CONSTRUCTION".

100% ISSUED FOR BID

PREPARED BY: TAYLOR B. PIERCE R.C.E 70097 DATE

PACE
Advanced Water Engineering
8723 E. Via de Ventura, Suite 130 SCOTTSDALE, CA 85258
P: (480) 991-3995 | www.paceaz.com

TITLE: HEADWORKS

JOB: TOWN OF JEROME
WASTEWATER
TREATMENT PLANT
YAVAPAI CO. AZ

SHEET
I1.0
94 OF 99 SHEETS

JOB NO. B614

HEADWORKS

AUTO-DIALER

PRIORITY NO. ALARM NOTIFICATION

SBR INFLUENT VALVE (1) | SBR #1 MIXER (2) | SBR #1 LEVEL (1)(1)(1)(1) | SBR #1 DO (2)(2) | WAS PUMP #1 (1) | DECANTER (1) | DECANT VALVE (1)

HMI

FAIL ALARM YA 05120 — OPEN YI 05120 — CLOSE YI 05120
FAIL ALARM YA 05110 — RUNNING YI 05110 — AUTO POS. YI 05110
HIGH ALARM LAH 05130 — LOW ALARM LAL 05130 — LEVEL LIR 05130 FT
HIGH ALARM LAH 05131 A — LOW ALARM LAL 05131 B
HIGH ALARM LAH 05160 A — LOW ALARM LAL 05160 A — DO AIR 05160 A mg/L
FAIL ALARM YA 05100 — RUNNING YI 05100 — AUTO POS. ZI 05100
FAIL ALARM YA 05111 — OPEN YI 05111 — CLOSE YI 05111
% OPEN YA 05121 — FAIL ALARM YA 05121 — % OPEN YI 05121 — CLOSED YIC 05121

OPEN YO 05120 — CLOSE YC 05120 — OPEN YI 05120 — CLOSE YI 05120 — DO — DO — DI — DI
RUN YC 05110 — RUNNING YI 05110 — AUTO POS. YI 05110 — DO — DI — DI
LEVEL LIR 05130 FT — AI
HIGH LEVEL LI 05131 A — LOW LEVEL LI 05131 B — DI — DI
DO AIR 05160 A mg/L — AI
RUN YC 05100 — RUNNING YI 05100 — AUTO POS. ZI 05100 — DO — DI — DI
OPEN YO 05111 — CLOSE YC 05111 — OPEN YI 05111 — CLOSE YI 05111 — DO — DO — DI — DI
% OPEN SC 05121 — CLOSE YO 05121 — % OPENED YI 05121 — CLOSED YIC 05121 — AO — AO — AI — AI

(120 VAC) CB — (120 VAC) CB — (480 VAC) CB

SBR CONTROL PANEL (VENDOR)

RTM 05110 — MS 05110 — HS 05110 HOA — TS 05110 TEMP — MA 05110 LEAK
MA 05100 LEAK — TS 05100 TEMP — MS 05100 — HS 05100 HOA

MCC

B — PROCESS AIR FROM BLOWER BUILDING — 4"-PA-402 — REF SHT I1.3
A — PROCESS AIR FROM BLOWER BUILDING — 4"-PA-401 — REF SHT I1.3
A — SCREENED INFLUENT FROM HEADWORKS — 10"-INFLT-103 — REF SHT I1.0
C — SUPERNATANT FROM AEROBIC DIGESTER — 6"-SNT-003 — REF SHT I1.2

SAME AS SBR #1

2"-WAS-901 — A — WASTE SLUDGE TO AEROBIC DIGESTER — REF SHT I1.2

SBR INFLUENT VALVE 1: HS 05120 — ZSO 05120 — ZSC 05120 — PV 05120 — BFV-04326A 4"x3" — BFV-04326B 4"x3" — PV-05120
SBR INFLUENT VALVE 2: HS 05122 — ZSO 05122 — ZSC 05122 — PV 05122 — BFV-04327A 4"x3" — BFV-04327B 4"x3" — PV-05122

3"-PA-404 — 3"-PA-405 — 3"-PA-406 — 3"-PA-407

LE 05130 — LSH 05131A — LSL 05131B — AT 05160A — AE 05160B DO
LE 05132 — LSH 05133A — LSL 05133B — AT 05161A — AE 05161B DO

SBR DECANTER 1 M-05111 — BFV 05121 — ZSO 05121 — ZSC 05121 — HS 05121 — BFV-05121
SBR DECANTER 2 M-05113 — BFV 05123 — ZSO 05123 — ZSC 05123 — HS 05123 — BFV-05123

SBR MIXER 1 MXR-05110 — ME 05110 LEAK — TE 05110 TEMP
SBR MIXER 2 MXR-05112 — ME 05112 LEAK — TE 05112 TEMP

ME 05100 LEAK — TE 05100 TEMP — WAS PUMP 1 PMP-05100
ME 05101 LEAK — TE 05101 TEMP — WAS PUMP 2 PMP-05101

FBD-04180 — SBR 1 — V-08120 — PV-08122
FBD-04181 — SBR 2 — V-08121 — PV-08123

6"-EFFLT-104 — B — EFFLUENT TO SURGE BASIN — REF SHT I1.2
6"-OF-002 — C — OVERFLOW TO DRYING BED LIFT STATION — REF SHT I1.4
6"-WAS-902 — D — WASTE SLUDGE TO DEWATERING — REF SHT I1.4

SEQUENCING BATCH REACTOR

NO	BY	DATE	REVISIONS	DATE	APP.

Registered Professional Engineer (Civil) — CERTIFICATE NO. 70097 — Timothy B. Pierce — Signed — ARIZONA, U.S.A. — Expires 12/31/28

PREPARED BY: PACE
DESIGNED BY: NE
DRAWN BY: DS, WW
CHECKED BY: TP
SCALE: AS NOTED
DATE: NOV 2025
JOB NO.: B614

TITLE: SEQUENCING BATCH REACTOR

JOB: TOWN OF JEROME WASTEWATER TREATMENT PLANT — YAVAPAI CO. AZ

100% ISSUED FOR BID

PREPARED BY: TAYLOR B. PIERCE — R.C.E. 70097 — DATE

PACE
Advanced Water Engineering
8723 E. VIA DE COMMERCIO, BLDG. 4, SUITE 4, SCOTTSDALE, CA 85258
P: (480) 991-3955 | www.paceaztr.com

SHEET I1.1
95 OF 99 SHEETS

JOB NO. B614

THESE DRAWINGS ARE THE PROPERTY OF P.A.C.E. AND SHALL NOT BE REPRODUCED IN ANY MANNER NOR BE USED FOR CONSTRUCTION UNLESS STAMPED "ISSUED FOR CONSTRUCTION".

W:\B614\Engineering\B614-30sheet\B614I1.1.dwg - Tab: I1.1 - by neddington on 11/17/25 at 8:55:57 AM

AUTO-DIALER

PRIORITY NO. ALARM NOTIFICATION

SURGE BASIN LEVEL

EFFLUENT FLOW METER

EFFLUENT DISCHARGE VALVE

DIGESTER LEVEL SWITCHES

HIGH ALARM LAH 05230 | HIGH ALARM LAH 05231 | % OPEN YA 05221 | FAIL ALARM YA 05221 | HIGH ALARM LAH 05232 | LOW ALARM LAL 05232 | HIGH ALARM LAH 05233

LEVEL LIR 05230 FT | HIGH LEVEL LI 05231 | GPM FIR 05240 GPM | TOTAL FQIR 05240 MG | % OPEN YI 05221 | CLOSED YIC 05221 | LEVEL LIR 05232 FT | HIGH LEVEL LI 05233

HMI

LEVEL LIR 05230 FT | HIGH LEVEL LI 05231 | GPM FI 05240 GPM | TOTAL FQI 05240 MG | % OPEN SC 05221 | CLOSE YO 05221 | % OPENED YI 05221 | CLOSED YIC 05221 | LEVEL LIR 05232 FT | HIGH LEVEL LI 05233

SBR CONTROL PANEL (VENDOR)

AI | DI | AI | AO | AO | AI | AI | AI | DI

(120 VAC) CB | (480 VAC) CB

MCC

C PROCESS AIR FROM BLOWER BUILDING REF SHT I1.3 — 2"-PA-403

A WASTE SLUDGE FROM SBR REF SHT I1.1 — 2"-WAS-901

LE 05232 | LSH 05233 | V-05220 | 6"-SNT-003 | C SUPERNATANT TO SBR 1 REF SHT I1.1

CBD-04280 | V-08220

AEROBIC DIGESTER

PV-08221 | 6"-SD-801 | A DIGESTED SLUDGE TO DEWATERING REF SHT I1.4

ZSO 06221 | ZSC 06221 | HS 06221 | BFV 06221

FT 06240 | FE 06240

LE 05230 | LSH 05231

B EFFLUENT FROM SBR REF SHT I1.1 — 6"-EFFLT-104

6"-EFFLT-105 | PV-06220 | FM-06240 | BFV-06221

CHLORINATION TABLET FEEDER

TAB-06290

V-06222 (WEIR SLIDE GATE)

DECHLORINATION TABLET FEEDER

TAB-06291

6"-EFFLT-106 | — TREATED EFFLUENT TO BITTER CREEK

SURGE BASIN

CHLORINE CONTACT BASIN

CHLORINE CONTACT AND DIGESTER

100% ISSUED FOR BID

PREPARED BY: TAYLOR B. PIERCE

PACE Advanced Water Engineering
8723 E. Via de Commercio, Suite 104, SCOTTSDALE, CA 85258
P: (408) 991-3595 | www.pacewater.com
R.C.E 70097 DATE

NO	BY	DATE	REVISIONS	DATE	APP.

Registered Professional Engineer (Civil) CERTIFICATE NO. 70097 Timothy B. Pierce Signed ARIZONA, U.S.A. Expires 12/31/28

THESE DRAWINGS ARE THE PROPERTY OF P.A.C.E. AND SHALL NOT BE REPRODUCED IN ANY MANNER NOR BE USED FOR CONSTRUCTION UNLESS STAMPED "ISSUED FOR CONSTRUCTION".

PREPARED BY: PACE
DESIGNED BY: NE
DRAWN BY: DS, WW
CHECKED BY: TP
SCALE: AS NOTED
DATE: NOV 2025
JOB NO.: B614

TITLE: CHLORINE CONTACT & DIGESTER

JOB: TOWN OF JEROME WASTEWATER TREATMENT PLANT — YAVAPAI CO. AZ

SHEET I1.2
96 OF 99 SHEETS

JOB NO. B614

W:\B614\Engineering\B614-Sheets\B614-I1.1.dwg - Tab: I1.2 - by reddington on 11/17/25 at 9:55:57 AM

AUTO-DIALER

PRIORITY NO. 1 ALARM NOTIFICATION

AERATION BLOWER #1 | AERATION BLOWER #2 | AERATION BLOWER #3 | DIGESTER BLOWER #1 | SBR #1 AIR VALVE | SBR #2 AIR VALVE

HMI

SBR CONTROL PANEL (VENDOR)

MCC

NOTE:
CONTRACTOR TO REVIEW SHOP DRAWINGS FROM EQUIPMENT MANUFACTURER FOR SIZE, NUMBER AND SCOPE OF SUPPLY OF VALVES AND INSTRUMENTS.

BLOWER 1: AMBIENT AIR → ENCLOSURE AIR FILTER → BLR-04310 → PT 04310 / TT 04310 → BLOW OFF VALVE → CV-04320A → BFV-04320B → 3" → 6" → 6"x4" → BFV-04325A → ZSO 04325A / ZSC 04325A / XV 04325A → 4"-PA-401 → A PROCESS AIR TO SBR 1 REF SHT I1.1

BLOWER 2: AMBIENT AIR → ENCLOSURE AIR FILTER → BLR-04311 → PT 04311 / TT 04311 → BLOW OFF VALVE → CV-04321A → BFV-04321B → 3"

BLOWER 3: AMBIENT AIR → ENCLOSURE AIR FILTER → BLR-04312 → PT 04312 / TT 04312 → BLOW OFF VALVE → CV-04322A → BFV-04322B → 3" → 2"x6" → BFV-04524

BLOWER 4: AMBIENT AIR → ENCLOSURE AIR FILTER → BLR-04313 → PT 04313 / TT 04313 → BLOW OFF VALVE → CV-04323A → BFV-04523B → 2" → 6"x4" → BFV-04325B → ZSO 04325B / ZSC 04325B / XV 04325B → 4"-PA-402 → B PROCESS AIR TO SBR 2 REF SHT I1.1

→ 2"-PA-403 → C PROCESS AIR TO AEROBIC DIGESTER REF SHT I1.2

BLOWER ROOM

100% ISSUED FOR BID

NO	BY	DATE	REVISIONS	DATE	APP.

Registered Professional Engineer (Civil) CERTIFICATE NO. 70097 Nicholas E. Ellsworth Signed 12/31/25 ARIZONA U.S.A. Expires 12/31/28

PREPARED BY: PACE
DESIGNED BY: NE
DRAWN BY: DS, WW
CHECKED BY: TP
SCALE: AS NOTED
DATE: NOV 2025
JOB NO.: B614

THESE DRAWINGS ARE THE PROPERTY OF P.A.C.E. AND SHALL NOT BE REPRODUCED IN ANY MANNER NOR BE USED FOR CONSTRUCTION UNLESS STAMPED 'ISSUED FOR CONSTRUCTION'.

TITLE: BLOWER ROOM

JOB: TOWN OF JEROME WASTEWATER TREATMENT PLANT — YAVAPAI CO. AZ

PREPARED BY: TAYLOR B. PIERCE — R.C.E 70097 — DATE
PACE Advanced Water Engineering
8723 E. Via de Commercio, Suite 104 | CONTROL | Tucson, AZ 85258
P: (480) 991-3995 | www.pacewater.com

SHEET I1.3
97 OF 99 SHEETS

JOB NO. B614

W:\B614\Engineering\B614-30\sheets\B614-I1.1.dwg - Tab: I1.3 - by reddington on 11/17/25 at 9:35:57 AM

AUTO-DIALER

PRIORITY NO. ALARM NOTIFICATION

DEWATERING FEED PUMP

SLUDGE FEED VALVE

DRYING BED LIFT STATION PUMPS

HMI

SBR CONTROL PANEL (VENDOR)

MCC

(480VAC) CB

(120 VAC) CB

FAIL ALARM YA 08400

RUNNING Y1 08400

RUN YC 08400

DI

DO

FAIL ALARM YA 08420B

OPEN Y1 08420B

CLOSE YC 08420B

FAIL ALARM YA 07400A

FAIL ALARM YA 07400B

RUNNING Y1 07400A

RUNNING Y1 07400B

SLUDGE BAGGING SYSTEM CONTROL PANEL

MS 08400 HOA

HS 08400 HOA

G RUNNING

Y FAULT

ETM

DRYING BED LIFT STATION CONTROL PANEL

MS 07400A HOA

HS 07400A HOA

MS 07400B HOA

HS 07400B HOA

OVERFLOW LIFT STATION CONTROL PANEL

HS 07401 HO

C OVERFLOW FROM SBR REF SHT I1.1

8"-OF-002

A DIGESTED SLUDGE FROM DIGESTER REF SHT I1.2

6"-SD-801

D WASTE SLUDGE FROM SBR 1 & 2 REF SHT I1.1

6"-WAS-902

— POTABLE WATER FROM TOWN

2"-PW-702

V-02420

PV-08421

6"x4"

PV-08420A

4"-WAS-903

PV-08420B

ZSO 08420B

ZSC 08420B

XV 08420B

PV-08422A

PV-08422B

SLUDGE DRYING BEDS

DISPOSAL

4"-FLTRT-302

4"-FLTRT-301

SLUDGE BAGGING UNIT BAG-08490

BV-08423

PMP-08400

MXR-08410

DRY POLYMER MIXING UNIT

BV-08425

CV-08424

1"-CDS-501

PMP-08401

ARV-07422

3"-DR RET-001

A OVERFLOW RETURN TO HEADWORKS REF SHT I1.0

LSHH 07430A

LSH 07430B

LSL 07430C

CV-07420A

V-07420B

CV-07421A

V-07421B

PMP-07400A

PMP-07400B

DRYING BED LIFT STATION

4"-OF-003

EMERGENCY OVERFLOW BASIN

ARV-07425

2"-OF RET-004

BV-07424

CV-07423

4"-OF-004

LSHH 07431A

LSL 07431B

PMP-07401

OVERFLOW LIFT STATION

DEWATERING AND LIFT STATIONS

100% ISSUED FOR BID

PREPARED BY: TAYLOR B. PIERCE R.C.E 70097 DATE

PACE Advanced Water Engineering
8723 E. Via de Commercio, Suite 1-1, Scottsdale, CA 85258
P: (480) 991-3595 | www.pacewater.com

TITLE: DEWATERING & LIFT STATIONS

JOB: TOWN OF JEROME WASTEWATER TREATMENT PLANT AZ
YAVAPAI CO.

SHEET I1.4
98 OF 99 SHEETS

JOB NO. B614

NO	BY	DATE	REVISIONS	DATE	APP.

Registered Professional Engineer (Civil) CERTIFICATE NO. 70097 Timothy B. Pierce Signed ARIZONA, U.S.A. Expires 12/31/28

PREPARED BY: PACE
DESIGNED BY: NE
DRAWN BY: DS, WW
CHECKED BY: TP
SCALE: AS NOTED
DATE: NOV 2025
JOB NO. B614

THESE DRAWINGS ARE THE PROPERTY OF P.A.C.E. AND SHALL NOT BE REPRODUCED IN ANY MANNER NOR BE USED FOR CONSTRUCTION UNLESS STAMPED "ISSUED FOR CONSTRUCTION".

V:\B614\Engineering\B614-30\sheets\B614-I1.1.dwg - Tab: I1.4 - by raddington on 11/17/25 at 9:55:57 AM

AUTO-DIALER

PRIORITY NO. ALARM NOTIFICATION

ATS

GENERATOR

FAULT ALARM YA 01003

LOW ALARM YA 01003

UTILITY SWITCH POSITION YI 01001

FAULT YI 01003

OFF / RUNNING YI 01003

LOW FUEL LEVEL YI 01003

HMI

HMI

UTILITY SWITCH POSITION YI 01001

FAULT YI 01003

OFF / RUNNING YI 01003

LOW FUEL LEVEL YI 01003

SBR CONTROL PANEL (VENDOR)

SBR CONTROL PANEL (VENDOR)

DI

DI

DI

DI

RUN R

FAIL A

I

MCC

MCC

(480 VAC) CB

C

C

C

C

C

E

E

LOCATED ON GENERATOR

ANNUNCIATOR

SWITCH POSITION

DI 01002

DO 01002

GEN RUN

EST 01000

C

ON-BOARD POWER ZONE

POWER FROM APS

C1

TRANSFORMER (BY UTILITY)

POWER TO E

SES

ATS

C CALL

GENERATOR

POWER TO E

SES, ATS, AND STAND-BY GENERATOR

100% ISSUED FOR BID

PREPARED BY: TAYLOR B. PIERCE R.C.E. 70097 DATE

PACE
Advanced Water Engineering
8723 E. VIA DE VENTURA, SUITE A, SCOTTSDALE, CA 85258
P: (480) 991-3595 | www.pacewater.com

JOB: TOWN OF JEROME WASTEWATER TREATMENT PLANT — YAVAPAI CO. AZ

TITLE: GENERATOR

SHEET I1.5

99 OF 99 SHEETS

JOB NO. B614

NO	BY	DATE	REVISIONS	DATE	APP.

Registered Professional Engineer (Civil) CERTIFICATE NO. 70097 TAYLOR B. PIERCE Signed ARIZONA, U.S.A. Expires 12/31/28

PREPARED BY: PACE
DESIGNED BY: NE
DRAWN BY: DS, WW
CHECKED BY: TP
SCALE: AS NOTED
DATE: NOV 2025
JOB NO.: B614

THESE DRAWINGS ARE THE PROPERTY OF P.A.C.E. AND SHALL NOT BE REPRODUCED IN ANY MANNER NOR BE USED FOR CONSTRUCTION UNLESS STAMPED 'ISSUED FOR CONSTRUCTION'.

W:\B614\Engineering\B614-30sheets\B614I1.1.dwg - Tab: I1.5 - by neddington on 11/17/25 at 8:55:57 AM

BID FORM FOR CONSTRUCTION CONTRACT
ADDENDUM 2 VERSION

Contractor Name: _____

The terms used in this Bid with initial capital letters have the meanings stated in the Instructions to Bidders, the General Conditions, and the Supplementary Conditions.

ARTICLE 1—OWNER AND BIDDER

1.01 This Bid is submitted to:

Town of Jerome
Submitted electronically via email to tpierce@pacewater.com. Alternatively, Bidder may submit a hard copy the Town of Jerome, 600 Clark Street, Jerome, AZ 86331.

The undersigned Bidder proposes and agrees, if this Bid is accepted, to enter into an Agreement with Owner in the form included in the Bidding Documents to perform all Work as specified or indicated in the Bidding Documents for the prices and within the times indicated in this Bid and in accordance with the other terms and conditions of the Bidding Documents.

ARTICLE 2—ATTACHMENTS TO THIS BID

2.01 The following documents are submitted with and made a condition of this Bid:

A. Required Bid security;

B. List of Proposed Subcontractors;

~~C. List of Proposed Suppliers;~~

D. Evidence of authority to do business in the state of the Project; or a written covenant to obtain such authority within the time for acceptance of Bids;

E. Contractor's license number as evidence of Bidder's State Contractor's License or a covenant by Bidder to obtain said license within the time for acceptance of Bids;

F. Required Bidder Qualification Statement with supporting data; ~~and~~

G. If Bid amount exceeds $10,000, signed Compliance Statement (RD 400-6). Refer to specific equal opportunity requirements set forth in the Supplementary Conditions of the Construction Contract (EJCDC C-800);

H. If Bid amount exceeds $25,000, signed Certification Regarding Debarment, Suspension, Ineligibility and Voluntary Exclusion - Lower Tier Covered Transactions (AD-1048);

I. If Bid amount exceeds $100,000, signed RD Instruction 1940-Q Exhibit A-1, Certification for Contracts, Grants, and Loans.

ARTICLE 3—BASIS OF BID—LUMP SUM BID AND UNIT PRICES

3.01 *Lump Sum Bids*

A. Bidder will complete the Work in accordance with the Contract Documents for the following lump sum (stipulated) price(s), together with any Unit Prices indicated in Paragraph 3.02:

Copyright© 2018 National Society of Professional Engineers, American Council of Engineering Companies, and American Society of Civil Engineers. All rights reserved.

1. Lump Sum Price (Base Bid and Alternates)

BASE BID LUMP SUM BREAKDOWN					
	Item Description	**Unit**	**Estimated Qty**	**Bid Unit Price**	**Total Bid Price**
1	**ACCESS ROAD & SITE WORK**				
1.1	SWPPP	LS	1	$	$
1.2	Access Road (cut, grading, paving)	CY	3,672	$	$
1.3	Roadway Appurtenance (guardrail, gates, catch basins)	LS	1	$	$
1.4	Traffic Control	LS	1	$	$
2	**12" SEWER LINE IMPROVEMENTS**				
2.1	12" FPVC New Sewer Main	LF	149	$	$
2.2	Sewer Road Alignment Cut to Fill	CY	498	$	$
2.3	48" Manholes	EA	2	$	$
2.4	Bypass Plumbing and Equipment	LS	1	$	$
3	**TREATMENT PLANT SITE**				
3.1	Survey, Staking & Materials Testing	LS	1	$	$
3.2	Clearing & Grubbing	LS	1	$	$
3.3	Earthwork (Shoring, Erosion Control & Final Site Grading)	LS	1	$	$
3.4	Earthwork (Excavation, Fill & Backfill)	CY	1,628	$	$
3.5	Yard Piping	LS	1	$	$

Copyright© 2018 National Society of Professional Engineers, American Council of Engineering Companies, and American Society of Civil Engineers. All rights reserved.

BASE BID LUMP SUM BREAKDOWN					
	Item Description	**Unit**	**Estimated Qty**	**Bid Unit Price**	**Total Bid Price**
3.6	Fencing	LF	150	$	$
3.7	Blower / Admin Building	SF	528	$	$
3.8	Reed Bed Conversion to Drying Beds	LS	1	$	$
3.9	Wetland Cells Conversion to Emergency Overflow	LS	1	$	$
3.10	Retaining Walls	LF	295	$	$
3.11	Structural Concrete (SBR Tanks, Site, Chlorine Contact Channel)	CY	275	$	$
3.12	SBR Equipment	LS	1	$	$
3.13	Headworks Equipment	LS	1	$	$
3.14	Sludge Bagging Unit	LS	1	$	$
3.15	Polymer Dosing System	LS	1	$	$
3.16	Sludge Feed Pump	LS	1	$	$
3.17	Shade Structure	LS	1	$	$
3.18	Disinfection & Miscellaneous Equipment	LS	1	$	$
3.19	Site Electrical and Standby Generator	LS	1	$	$

Copyright© 2018 National Society of Professional Engineers, American Council of Engineering Companies, and American Society of Civil Engineers. All rights reserved.

BASE BID LUMP SUM BREAKDOWN					
	Item Description	**Unit**	**Estimated Qty**	**Bid Unit Price**	**Total Bid Price**
3.20	Upgrade Site to 3 Phase Power	LS	1	$	$
4	**OTHER**				
4.1	Mobilization/Demobilization	LS	1	$	$
4.2	Taxes	LS	1	$	$
				TOTAL BASE BID LUMP SUM AMOUNT	$

BID ALTERNATES LUMP SUM BREAKDOWN					
NEW 12" SEWER AND ACCESS ROAD					
	Item Description	**Unit**	**Estimated Qty**	**Bid Unit Price**	**Total Bid Price**
1	**Bid Adder:** 12" FPVC New Sewer Main	LF	1,660	$	$
2	**Bid Adder:** Restore Lateral Connections	EA	5	$	$
3	**Bid Adder:** Sewer Road Alignment Cut to Fill	CY	4,010	$	$
4	**Bid Adder:** 48" Manholes	EA	10	$	$
5	**Bid Adder:** Rockfall Barrier	LF	150	$	$
				TOTAL ALTERNATES LUMP SUM AMOUNT	

Copyright© 2018 National Society of Professional Engineers, American Council of Engineering Companies, and American Society of Civil Engineers. All rights reserved.

TOTAL LUMP SUM PRICE (BASE BID AND ALTERNATES)		
	Item Description	**Total Bid Price**
1	Total Lump Sum for Base Bid	$
2	Total Lump Sum for Bid Adder: New 12" Sewer and Access Road	$
	TOTAL LUMP SUM BASE BID AND ALTERNATES PRICE	$

B. All specified cash allowance(s) are included in the price(s) set forth below, and have been computed in accordance with Paragraph 13.02 of the General Conditions.

TOTAL ALLOWANCE PRICE		
	Item Description	**Total Bid Price**
1	Materials Testing	$
	TOTAL ALLOWANCE PRICE	$

ARTICLE 4—DELETED

ARTICLE 5—DELETED

ARTICLE 6—TIME OF COMPLETION

6.01 Bidder agrees that the Work will be substantially complete and will be completed and ready for final payment in accordance with Paragraph 15.06 of the General Conditions on or before the dates or within the number of calendar days indicated in the Agreement.

6.02 **[Deleted]**

6.03 **[Deleted]**

6.04 Bidder accepts the provisions of the Agreement as to liquidated damages.

ARTICLE 7—BIDDER'S ACKNOWLEDGEMENTS: ACCEPTANCE PERIOD, INSTRUCTIONS, AND RECEIPT OF ADDENDA

7.01 *Bid Acceptance Period*

A. This Bid will remain subject to acceptance for 60 days after the Bid opening, or for such longer period of time that Bidder may agree to in writing upon request of Owner.

Copyright© 2018 National Society of Professional Engineers, American Council of Engineering Companies, and American Society of Civil Engineers. All rights reserved.

7.02 *Instructions to Bidders*

A. Bidder accepts all of the terms and conditions of the Instructions to Bidders, including without limitation those dealing with the disposition of Bid security.

7.03 *Receipt of Addenda*

A. Bidder hereby acknowledges receipt of the following Addenda:

Addendum Number	Addendum Date

7.04 **[Deleted]**

ARTICLE 8—BIDDER'S REPRESENTATIONS AND CERTIFICATIONS

8.01 *Bidder's Representations*

A. In submitting this Bid, Bidder represents the following:

1. Bidder has examined and carefully studied the Bidding Documents, including Addenda.

2. **[Deleted]**

3. Bidder is familiar with all Laws and Regulations that may affect cost, progress, and performance of the Work**, including all American Iron and Steel requirements.**

4. Bidder has carefully studied the reports of explorations and tests of subsurface conditions at or adjacent to the Site and the drawings of physical conditions relating to existing surface or subsurface structures at the Site that have been identified in the Supplementary Conditions, with respect to the Technical Data in such reports and drawings.

5. Bidder has carefully studied the reports and drawings relating to Hazardous Environmental Conditions, if any, at or adjacent to the Site that have been identified in the Supplementary Conditions, with respect to Technical Data in such reports and drawings.

6. Bidder has considered the information known to Bidder itself; information commonly known to contractors doing business in the locality of the Site; information and observations obtained from visits to the Site; the Bidding Documents; and the Technical Data identified in the Supplementary Conditions or by definition, with respect to the effect of such information, observations, and Technical Data on (a) the cost, progress, and performance of the Work; (b) the means, methods, techniques, sequences, and procedures of construction to be employed by Bidder, if selected as Contractor; and (c) Bidder's (Contractor's) safety precautions and programs.

7. Based on the information and observations referred to in the preceding paragraph, Bidder agrees that no further examinations, investigations, explorations, tests, studies,

Copyright© 2018 National Society of Professional Engineers, American Council of Engineering Companies, and American Society of Civil Engineers. All rights reserved.

or data are necessary for the performance of the Work at the Contract Price, within the Contract Times, and in accordance with the other terms and conditions of the Contract.

8. Bidder is aware of the general nature of work to be performed by Owner and others at the Site that relates to the Work as indicated in the Bidding Documents.

9. Bidder has given Engineer written notice of all conflicts, errors, ambiguities, or discrepancies that Bidder has discovered in the Bidding Documents, and of discrepancies between Site conditions and the Contract Documents, and the written resolution thereof by Engineer is acceptable to Contractor.

10. The Bidding Documents are generally sufficient to indicate and convey understanding of all terms and conditions for performance and furnishing of the Work.

11. The submission of this Bid constitutes an incontrovertible representation by Bidder that without exception the Bid and all prices in the Bid are premised upon performing and furnishing the Work required by the Bidding Documents.

8.02 *Bidder's Certifications*

A. The Bidder certifies the following:

1. This Bid is genuine and not made in the interest of or on behalf of any undisclosed individual or entity and is not submitted in conformity with any collusive agreement or rules of any group, association, organization, or corporation.

2. Bidder has not directly or indirectly induced or solicited any other Bidder to submit a false or sham Bid.

3. Bidder has not solicited or induced any individual or entity to refrain from bidding.

4. Bidder has not engaged in corrupt, fraudulent, collusive, or coercive practices in competing for the Contract. For the purposes of this Paragraph 8.02.A:

a. Corrupt practice means the offering, giving, receiving, or soliciting of anything of value likely to influence the action of a public official in the bidding process.

b. Fraudulent practice means an intentional misrepresentation of facts made (a) to influence the bidding process to the detriment of Owner, (b) to establish bid prices at artificial non-competitive levels, or (c) to deprive Owner of the benefits of free and open competition.

c. Collusive practice means a scheme or arrangement between two or more Bidders, with or without the knowledge of Owner, a purpose of which is to establish bid prices at artificial, non-competitive levels.

d. Coercive practice means harming or threatening to harm, directly or indirectly, persons or their property to influence their participation in the bidding process or affect the execution of the Contract.

Copyright© 2018 National Society of Professional Engineers, American Council of Engineering Companies, and American Society of Civil Engineers. All rights reserved.

BIDDER hereby submits this Bid as set forth above:

Bidder:

_____

(typed or printed name of organization)

By: _____

(individual's signature)

Name: _____

(typed or printed)

Title: _____

(typed or printed)

Date: _____

(typed or printed)

If Bidder is a corporation, a partnership, or a joint venture, attach evidence of authority to sign.

Attest: _____

(individual's signature)

Name: _____

(typed or printed)

Title: _____

(typed or printed)

Date: _____

(typed or printed)

Address for giving notices:

_____

_____

Bidder's Contact:

Name: _____

(typed or printed)

Title: _____

(typed or printed)

Phone: _____

Email: _____

Address:

_____

_____

_____

Bidder's Contractor License No.: (if applicable) _____

Copyright© 2018 National Society of Professional Engineers, American Council of Engineering Companies, and American Society of Civil Engineers. All rights reserved.

Jerome Wastewater Treatment Plant Improvements

ADDENDUM #3

Date: May 20, 2026

Quest CDN #9117808

This addendum is to formally issue responses to bidder questions and minor modifications. Reminder: Acknowledge receipt of this addendum on the Bid Form.

Attachments:

1. Attachment 1 – Pre-Bid Meeting Sign-In Sheet
2. Attachment 2 – Property Boundary Survey Map
3. Attachment 3 – USDA-RD Letter of Conditions
4. Attachment 4 – Douglas Rd Easement Exhibit

Questions

1. Do prevailing wages apply to this project?

   Response: *Prevailing wages do not apply to this project.*

2. Will there be any coatings on the concrete basins?

   Response: *Coatings are not required in the proposed treatment basins.*

3. Will the Town pay for stored material?

   Response: *Yes, the pay application form that will be used accounts for and allows payment/tracking of stored materials.*

4. What is the engineer's cost estimate?

   Response: *The engineer's cost estimate, which was compiled in 2019, is approximately $6M. The USDA-RD Letter of Conditions is **attached** and includes the total funding amount the Town was awarded by USDA-RD.*

5. When is the anticipated notice to proceed?

   Response: *The NTP is expected within 30 days of Town Council's contract award decision, contingent on USDA-RD concurrence.*

6. The Geotech Report mentions a slurry fill is required in certain backfilled areas, is that included in the project scope? Similarly, is compacted AB required under the slabs as noted in the Geotech Report?

   Response: *Subgrade prep for slabs-on-grade will conform to the requirements of the Geotech Report, which specifies 1ft compacted engineered fill beneath slabs on grade. Slurry fill is not required by the Geotech Report but is called for in the structural sheets and shall be placed where shown.*

7. Is HDPE an acceptable alternative to FPVC for the proposed sewer? If acceptable, please specify a DR rating for the alternate material.

   Response: *DR21 HDPE may be considered as an equal to FPVC provided the Contractor submits an alternative design in accordance with MAG Section 738 demonstrating equivalent hydraulic capacity and proper structural/installation design. Pipe shall be fusion-welded only, with appropriate restraint at manholes and transitions. Design shall account for thermal expansion and contraction as well. FPVC remains the basis of design until HDPE substitution is formally reviewed and accepted.*

8. Are there any other areas designated for fill material?

   Response: *Proposed disposal location for excess material is as shown on the construction plans. The contractor may coordinate with the Town to locate additional disposal areas on the WWTP site or within Town. Neighboring property owner, Verde Ex has previously expressed an interest in excess material; the contractor may also negotiate the disposal of said material directly with Verde Ex, the Jerome State Historic Park or any other nearby landowners.*

9. Is it possible to perform a site walk at a later date?

   Response: *Additional site walks may be performed at a later time. Please coordinate with the Town Public Works Director, Marty Boland at (520) 904-5272.*

10. Can the gravity sewer main be accessed from any location other than the WWTP, as shown on the plans?

    Response: *Yes, the gravity sewer main can also be accessed from Douglas Road. The Town has acquired an easement for this area, which may be used by the Contractor as needed. The limits of the easement are shown in Attachment 5. Work shall terminate at the wash crossing. The Contractor may not cross beyond the easement boundary, modify the existing crossing in any way, nor impact the existing drainage pattern without prior review and approval from Yavapai County.*

11. Please relocate the junction boxes to be near their individual pieces of equipment. Each piece of equipment has a limited length of cable. The arrangement shown will require specialized cable lengths, which would change depending on how conduit is run, not allowing us to be able to estimate the length needed. As well, we have found that operators prefer to have the disconnect near the piece of equipment.

    Response: *The junction boxes can be field re-located during construction to be placed near their respective pieces of equipment. Please use standard cable lengths for estimating purposes.*

Town of Jerome
Pre-Bid Meeting Sign-In Sheet

Thursday, May 12, 2026
2:00 PM

Town of Jerome WWTP Improvements Pre-Bid Meeting Sign-In

Company	Contact Name	Phone	Email Address
Winwater of Phoenix	Austin Malcom	308-224-5283	apmalcom@winsupply.com
Winwater PHX	Griffin Dvinack	320-212-5535	griffin@PHXWinWater.com
TECHNOLOGY CONSTRUCTION	GARRETT SWEETLAND	602-292-7871	garrett@TCIAZ.NET
KLEAR CIVIL CORP	GARRY HAGDEM	623-742-8329	garry.hagdem@KCORPCORP.com
HAYDON CONSTRUCTION	MIKE SHIPLEY	480.901.0537 ~~480-32~~	MSHIPLEY@HAYDON.COM
~~[illegible]~~			
Eagle Mtn	Travis Johanson	928-22-0-0767	Travis@Emcaz.com
EAGLE MNT CONST	JASON WOODS	928-600-1107	JASON.WOODS@EMCAZ.COM
L&M PAINTING	GILLES BUSSIERES	602-576-2710	GILLES@LMPAINTINGCO.COM
SEC	Richard Noone	928 634 5889	rnoone@sec-landmgt.com

Town of Jerome
Pre-Bid Meeting Sign-In Sheet

Thursday, May 12, 2026
2:00 PM

Town of Jerome WWTP Improvements Pre-Bid Meeting Sign-In

Company	Contact Name	Phone	Email Address
Hensel Phelps	Larry V. Tackett	623-698-1186	ltackett@henselphelps.com
Kasey Martin	Rain For Rent	480-276-5068	Kmartin@rainforrent.com
LOENBRO	JON CAMPING	406 231 7293	JCAMPING@LOENBRO.COM
B4 Enterprises	Kedrick Jessop	435-704-6583	Kedrick@b4concrete.com
FANN Environmental	David Syme	928-308-6812	dimsyme@FANNENVIRONMENTAL.com
VIRTUAL ATTENDEES			
FILANC	Klete Rogers		krogers@filanc.com
FILANC	Dan East		deast@filanc.com
PACE	Duong Do	(714) 481-7223	do@pacewater.com
PACE	Andrea Jaycox	(602) 502-9683	ajaycox@pacewater.com
PACE	Nathan Tesch	(602) 695-4679	ntesch@pacewater.com
Superior Underground Services	Chris White	480-261-7800	cwhite@superiorundergroundservices.com

CEMETERY FENCELINE
END EASEMENT C
BEGIN EASEMENTS D & Y

TEMP. EASEMENT Y
50'w x 235 LF +/-

BEGIN IMPROVED ROAD
TO TREATMENT PLANT AT
FENCELINE

EASEMENT D
28'w x 235 LF +/-

EXISTING CEMETERY ROAD
SEE NOTE 1

CEMETERY

401-03-001L
TOWN OF JEROME

401-03-043C
JEROME VERDE DEVELOPMENT LLC

EASEMENT C
16'w x 1009 LF
SEE NOTE 1

END EASEMENTS D & Y AT PROPERTY LINE

174.92'

401-03-001C
STEWART

IMPROVED ROAD TO
TREATMENT PLANT

WASTEWATER TREATMENT PLANT

CEMETERY FENCELINE
END EASEMENT B
BEGIN EASEMENT C

8" ELECTRIC EASEMENT
BOOK 1080 DAL, PAGE 622

EXISTING GRAVEL
PARKING AREA

EASEMENT B
26'w x 74 LF

401-03-001P
JEROME VERDE DEVELOPMENT LLC

MH-11

TEMP. EASEMENT X
50'w x 180 LF +/-

EASEMENT A
26'w x 177 LF

SEE ENLARGEMENT

401-03-001N
TOWN OF JEROME

401-11-0031A
CROSBY

401-11-007C
LEACHMAN

401-11-006

401-11-005B

401-11-005A

401-11-004

401-11-003

401-11-002C

401-11-002B

401-11-002A

401-11-001

NORTH DR

THIS BLDG
HAS BEEN
REMOVED

401-11-008
McWHIRTER

89A

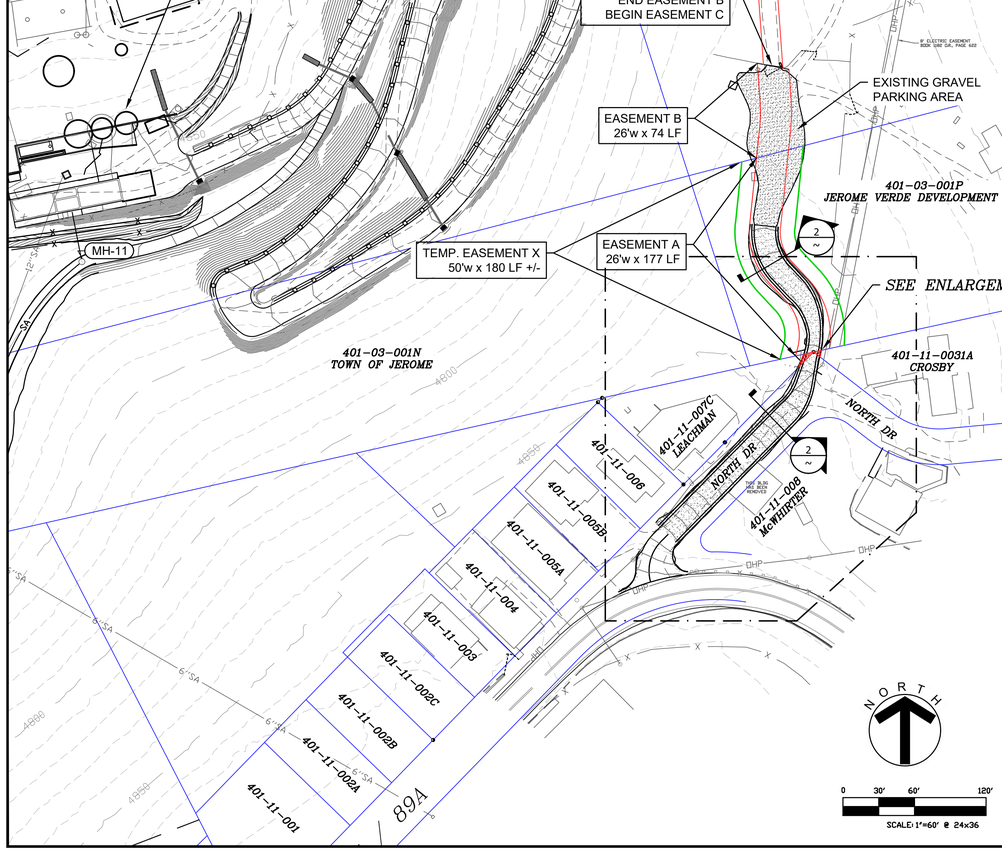

EXISTING ROAD

PROPOSED 26'
ACCESS EASEMENT

PROPOSED 50' TEMP
CONST. EASEMENT

ROAD NARROWS TO 9' LANE
AT PROPERTY CORNER

401-03-001N
TOWN OF JEROME

401-03-001P
JEROME VERDE DEVELOPMENT LLC

EXISTING
OVERHEAD
POWER LINE

EXISTING 8' WIDE
POWER LINE
EASEMENT

EASEMENT F
20 SF +/-

EASEMENT E
43 SF +/-

EXISTING
POWER
POLE

401-11-0031A
CROSBY

401-11-007C
LEACHMAN

NORTH DR

30'

40'

18'

EXISTING
OVERHEAD
POWER LINE

THIS BLDG
HAS BEEN
REMOVED

401-11-008
McWHIRTER

HAMPSHIRE/89A

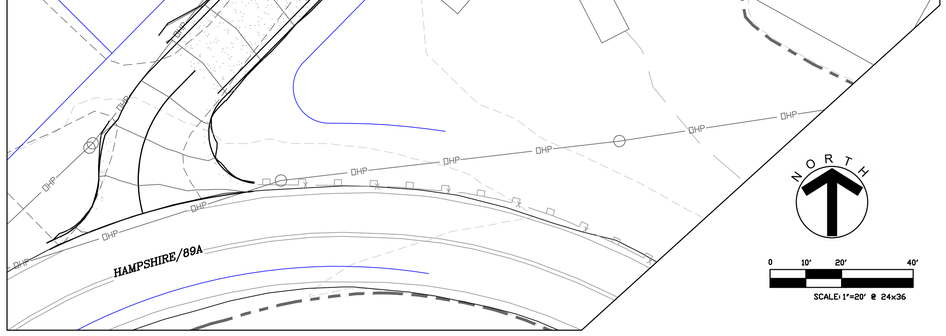

SUMMARY OF ACCESS EASEMENTS					
EASMT	LOCATION	LENGTH (FT)	WIDTH (FT)	AREA (SF)	AREA (AC)
A	401-03-001P	177	26	4,602	0.106
B	401-03-043C	74	26	1,924	0.044
C	401-03-043C	1,009	16	16,144	0.371
D	401-03-043C	235	28	6,580	0.151
E	401-11-007C	NA	NA	43	NA
F	401-11-031A	NA	NA	20	NA
X*	401-03-001P	180	50	4,320*	0.099
Y*	401-03-043C	NA	NA	5,170*	0.119

*EASEMENTS "X" & "Y" ARE TEMPORARY CONSTRUCTION EASEMENTS. AREA= TOTAL EASEMENT MINUS PERMANENT EASEMENT

NOTES

1. THE CEMETERY IS A HISTORICAL SITE. NO IMPROVEMENTS ARE ALLOWED BEYOND THE EXISTING ROADWAY. THE PROPOSED EASEMENT THROUGH THE SITE SHALL BE FOR THE USE AND MAINTENANCE OF THE EXISTING ROADWAY.
2. THE EXISTING ROAD ALONG NORTH STREET WILL BE WIDENED TO 18' FOR TRUCK ACCESS TO THE TREATMENT PLANT. SEE DETAIL 2.
4. THE EXISTING ROAD FROM NORTH STREET TO THE CEMETARY WILL BE WIDENED FOR TRUCK ACCESS TO THE TREATMENT PLANT. SEE DETAIL 2.
5. THE EXISTING ROAD FROM THE CEMETARY TO THE TREATMENT PLANT WILL BE WIDENED TO 18' FOR TRUCK ACCESS. SEE DETAIL 1.
6. 50' WIDE TEMPORARY CONSTRUCTION EASEMENTS ARE PROPOSED FOR CONSTRUCTING THE ACCESS ROADS TO THE CEMETARY AND TREATMENT PLANT.
7. TOTAL EASEMENT AREAS ARE APPROXIMATE BASED ON LINEAR FOOTAGE. FINAL AREAS WILL BE MORE PRECISE AND MAY VARY.

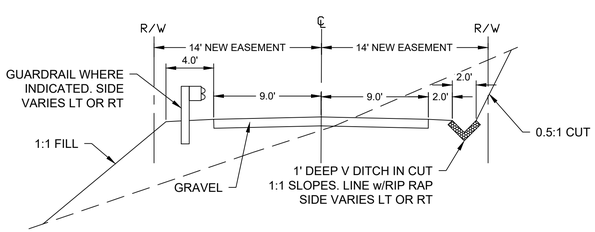

1 TYPICAL ACCESS ROAD TO TREATMENT PLANT 1"=6'

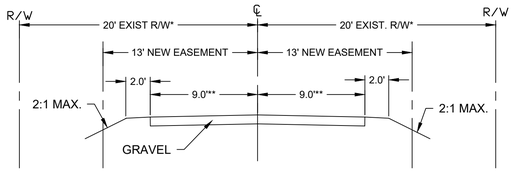

*NORTH DRIVE HAS 40' EXISTING RIGHT OF WAY.
**LANE WIDTH VARIES PER PLAN

2 TYPICAL ACCESS ROAD HWY 89A TO CEMETARY 1"=6'

THIS EXHIBIT SHOWS PROPOSED EASEMENTS FOR ACCESS TO THE TOWN OF JEROME WASTEWATER TREATMENT PLANT. EASEMENTS SHALL BE FOR ROAD CONSTRUCTION & MAINTENANCE AND FOR ACCESS TO THE TREATMENT PLANT. TO BE OBTAINED BY THE TOWN OF JEROME.

EXHIBIT. NOT FOR CONSTRUCTION. FOR AGENCY REVIEW ONLY

TOWN OF JEROME
WASTEWATER TREATMENT PLANT IMPROVEMENTS

SEC Inc.
825 COVE PARKWAY
COTTONWOOD, AZ 86326
928-282-7787

PROPOSED ACCESS EASEMENTS EXHIBIT

DATE	DRAWN	SHEET
4/11/24	NMW	1 OF 1
SCALE	CHECKED	PROJECT NO.
AS SHOWN	KG	19-1101CE

S:\LAND PROJECTS 2004 ENGINEERING\19-1101CE JEROME WWTP\DWG\C3D\EXHIBITS\ROAD EASEMENTS.DWG

©2024, SEC, Inc., All Rights Reserved. This document is protected under the United States Copyright Act. No part may be reproduced in any form or by any means or stored in a database or retrieval system, without the prior written permission of SEC, Inc. These plan documents have been prepared using technical knowledge that would be applied by other qualified registrants who practice the same profession in the same area and at the same time. Efforts have been made to be as accurate as possible. However, plan documents could contain unintentional technical inaccuracies, typographical errors or omissions. Users of these plan documents should understand that it is highly probable that errors and omissions will occur in any plan/document preparation process.

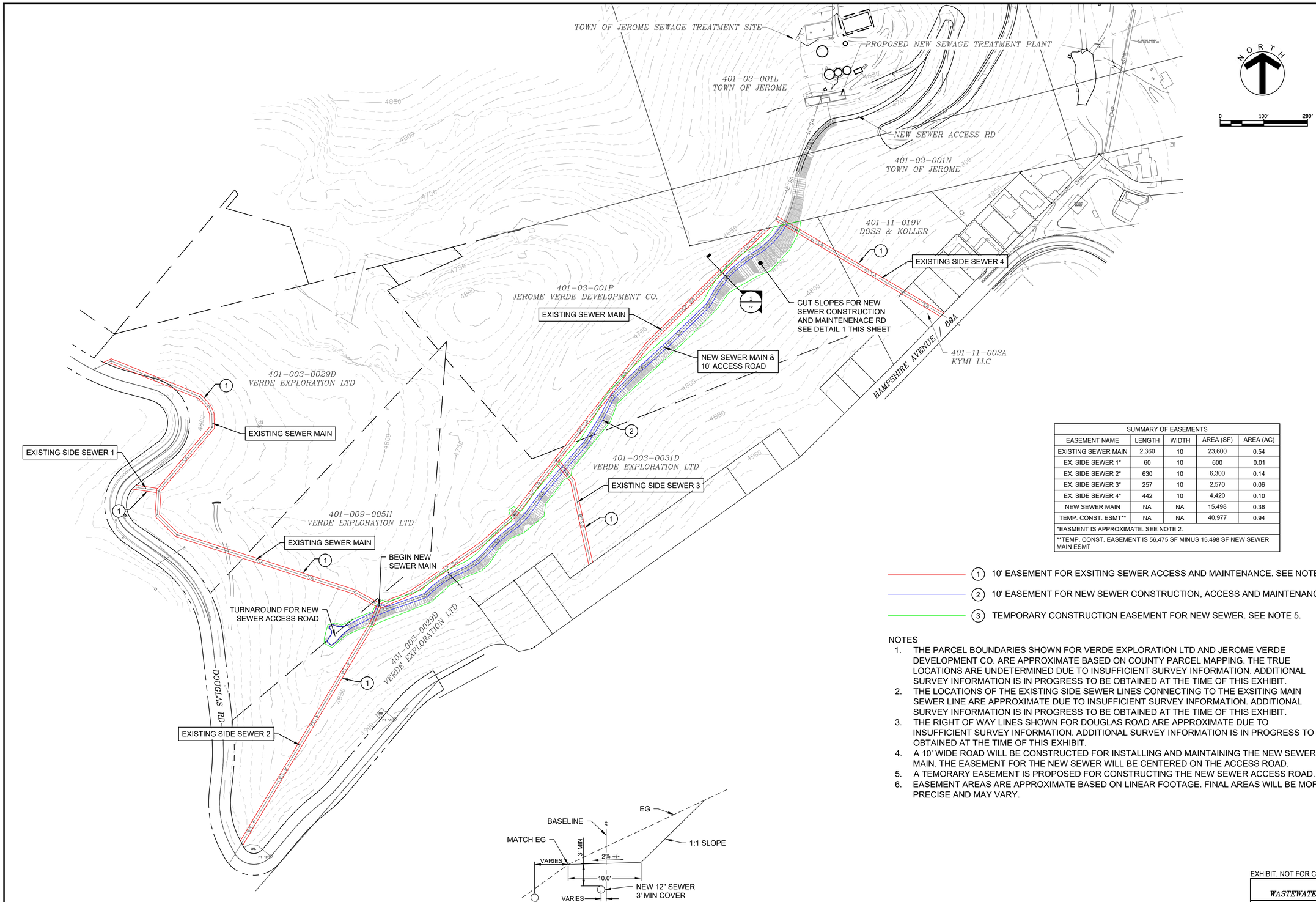

SUMMARY OF EASEMENTS				
EASEMENT NAME	LENGTH	WIDTH	AREA (SF)	AREA (AC)
EXISTING SEWER MAIN	2,360	10	23,600	0.54
EX. SIDE SEWER 1*	60	10	600	0.01
EX. SIDE SEWER 2*	630	10	6,300	0.14
EX. SIDE SEWER 3*	257	10	2,570	0.06
EX. SIDE SEWER 4*	442	10	4,420	0.10
NEW SEWER MAIN	NA	NA	15,498	0.36
TEMP. CONST. ESMT**	NA	NA	40,977	0.94
*EASMENT IS APPROXIMATE. SEE NOTE 2.				
**TEMP. CONST. EASEMENT IS 56,475 SF MINUS 15,498 SF NEW SEWER MAIN ESMT				

(1) 10' EASEMENT FOR EXSITING SEWER ACCESS AND MAINTENANCE. SEE NOTE 2.

(2) 10' EASEMENT FOR NEW SEWER CONSTRUCTION, ACCESS AND MAINTENANCE. SEE NOTE 4

(3) TEMPORARY CONSTRUCTION EASEMENT FOR NEW SEWER. SEE NOTE 5.

NOTES

1. THE PARCEL BOUNDARIES SHOWN FOR VERDE EXPLORATION LTD AND JEROME VERDE DEVELOPMENT CO. ARE APPROXIMATE BASED ON COUNTY PARCEL MAPPING. THE TRUE LOCATIONS ARE UNDETERMINED DUE TO INSUFFICIENT SURVEY INFORMATION. ADDITIONAL SURVEY INFORMATION IS IN PROGRESS TO BE OBTAINED AT THE TIME OF THIS EXHIBIT.
2. THE LOCATIONS OF THE EXISTING SIDE SEWER LINES CONNECTING TO THE EXSITING MAIN SEWER LINE ARE APPROXIMATE DUE TO INSUFFICIENT SURVEY INFORMATION. ADDITIONAL SURVEY INFORMATION IS IN PROGRESS TO BE OBTAINED AT THE TIME OF THIS EXHIBIT.
3. THE RIGHT OF WAY LINES SHOWN FOR DOUGLAS ROAD ARE APPROXIMATE DUE TO INSUFFICIENT SURVEY INFORMATION. ADDITIONAL SURVEY INFORMATION IS IN PROGRESS TO BE OBTAINED AT THE TIME OF THIS EXHIBIT.
4. A 10' WIDE ROAD WILL BE CONSTRUCTED FOR INSTALLING AND MAINTAINING THE NEW SEWER MAIN. THE EASEMENT FOR THE NEW SEWER WILL BE CENTERED ON THE ACCESS ROAD.
5. A TEMORARY EASEMENT IS PROPOSED FOR CONSTRUCTING THE NEW SEWER ACCESS ROAD.
6. EASEMENT AREAS ARE APPROXIMATE BASED ON LINEAR FOOTAGE. FINAL AREAS WILL BE MORE PRECISE AND MAY VARY.

1 TYPICAL SEWER CONSTRUCTION ROAD
1"=6'

THIS EXHIBIT SHOWS PROPOSED EASEMENTS FOR CONSTRUCTION AND MAINTENANCE OF EXISTING AND NEW SEWER LINES TO BE OBTAINED BY THE TOWN OF JEROME.

EXHIBIT. NOT FOR CONSTRUCTION. FOR AGENCY REVIEW ONLY

TOWN OF JEROME
WASTEWATER TREATMENT PLANT IMPROVEMENTS

PROPOSED SEWER EASEMENTS EXHIBIT

SEC Inc.
825 COVE PARKWAY
COTTONWOOD, AZ 86326
928-282-7787

DATE	DRAWN	SHEET
2/28/24	NMW	1 OF 1
SCALE	CHECKED	PROJECT NO.
AS SHOWN	KG	19-1101CE

©2024, SEC, Inc., All Rights Reserved. This document is protected under the United States Copyright Act. No part may be, reproduced in any form or by any means or stored in a database or retrieval system, without the prior written permission of SEC, Inc. These plans/documents have been prepared using technical knowledge that would be applied by other qualified registrants who practice the same profession in the same area and at the same time. Efforts have been made to be as accurate as possible. However, plans/documents could contain unintentional technical inaccuracies, typographical errors or omissions. Users of these plans/documents should understand that it is highly probable that errors and omissions will occur in any plan/document preparation process.

USDA
United States Department of Agriculture

Rural Development

State Office

230 N. 1st Avenue
#206
Phoenix, AZ 85003

Voice 602-280-8701
Fax 855-699-8035
TDD 602-280-8705

April 8, 2022

Town of Jerome, Arizona
600 Clark Street (PO Box 335)
Jerome, AZ 86331

SUBJECT: Letter of Conditions
Recipient Name: Town of Jerome, Arizona

Project Name: Sewer Rehab SEARCH 2020
CFDA NUMBER – 10.760

RUS Loan (SECD):	$1,819,000.00
RUS Grant (SECD)	$4,830,000.00
SEARCH Grant:	$30,000.00 (previously funded)

Dear Ms. Gallagher:

This letter establishes conditions which must be understood and agreed to by you before further consideration may be given to your application. The loan and/or grant will be administered on behalf of the Rural Utilities Service (RUS) by the State and Area staff of USDA Rural Development (RD), both of which are referred to throughout this letter as the Agency. Any changes in project cost, source of funds, scope of project, or any other significant changes in the project or applicant must be reported to and concurred with by the Agency by written amendment to this letter. This includes any significant changes in the Applicant's financial condition, operation, organizational structure or executive leadership. Any changes made without Agency concurrence shall be cause for discontinuing processing of the application.

This letter does not constitute loan and/or grant approval, nor does it ensure that funds are or will be available for the project. The funding is being processed on the basis of a loan not to exceed $1,819,000.00 and/or a grant not to exceed $4,830,000.00. The loan and/or grant will be considered approved on the date Form RD 1940-1, "Request for Obligation of Funds" is signed by the Agency approval official.

The applicant will ensure projects are completed in a timely, efficient, and economical manner. You must meet all conditions set forth under Section III – Requirements Prior to Advertising for Bids within 1 year of this letter.

If you do not meet the conditions of this letter, the Agency reserves the right to withdraw Agency funding.

If you agree to meet the conditions set forth in this letter and desire further consideration be given to your application, please complete and return the following forms within 14 days:

Form RD 1942-46, "Letter of Intent to Meet Conditions"

USDA is an equal opportunity provider, employer and lender.

Form RD 1940-1, "Request for Obligation of Funds"

All parties may access information and regulations referenced in this letter at our website located at https://www.rd.usda.gov/programs-services/water-environmental-programs/water-waste-disposal-loan-grant-program.

The conditions are as follows:

SECTION I - PROJECT SCOPE

1. Project Description – Funds will be used to design, purchase, and install necessary equipment and components to address high ammonia and copper levels in the area along with line improvements to the aging wastewater system. This project is addressing the Arizona Department of Environmental Quality (ADEQ) consent order to meet compliance.

Facilities will be designed and constructed in accordance with sound engineering practices and must meet the requirements of Federal, State, and local agencies. The proposed facility design must be based on the Preliminary Engineering Report (PER), prepared by PACE dated/amended December 2021, as concurred with by the Agency.

2. Project Funding – The Agency is offering the following funding for your project:

RUS Loan (SECD)-	$ 1,819,000.00
RUS Grant -	$ 4,830,000.00
SEARCH Grant -	$30,000.00 (previously funded)
Other Funding -	$ -0-

TOTAL PROJECT COST - $ 6,679,000.00

Any changes in funding sources following obligation of Agency funds must be reported to the processing official. Prior to loan closing, any increase in non-Agency funding will be applied first as a reduction to Agency grant funds, up to the total amount of the grant, and then as a reduction to Agency loan funds.

The applicant must certify that they have exhausted all other funding avenues and have no pending funding considerations from any other sources. Further, the applicant must certify that they do not intend to apply anywhere else for funding for this project. If, after obligation of Agency funds, other funding becomes available, the Agency reserves the right to deobligate any and all funding for this project and to re-underwrite. This may result in the offering of a different funding package to for this project.

Prior to advertisement for construction bids, you must provide evidence of applicant contributions and other funding sources. This evidence should include a copy of the commitment letter. Agency funds will not be used to pre-finance funds committed to the project from other sources.

3. Project Budget – Funding from all sources has been budgeted for the estimated expenditures as follows:

Project Costs:	**Total Budgeted:**
Development/Construction	
Access Road	$778,553
10" Sewer Line Improv.	$925,000
Treatment Plant Site	$558,500
Concrete Tanks	$142,500
General Conditions	$806,306
Equipment	$1,435,000
Contingency	$383,893
Engineering Fees	
Includes:	
Pre-Development (PER/ER)	$30,000
Study & Report Phase	$69,020
Design Phase	$646,500
Permitting & Fees	$89,000
Bid Services	$45,000
Engineering Const. Services	$501,000
Post Construction Services	$5,000
Contingency (Non-Construction)	$67,776
Interest/Fees – Const. Loan	$167,452
Interest/Fees – Bridge Loan	$28,500
TOTAL	$6,679,000

Project feasibility and funding will be reassessed if there is a significant change in project costs after bids are received. Obligated loan and/or grant funds not needed to complete the proposed project will be deobligated. Any reduction will be applied to Agency grant funds first. If actual project costs exceed the project cost estimates, an additional contribution by the Owner may be necessary. An "Amended Letter of Conditions" will be issued for any changes to the total project budget.

4. Project Timeline – To ensure that the project proceeds in a timely manner, key processing milestones have been established in accordance with the PER or other Agency approved documentation. **Projects should be completed and Agency funds fully disbursed within three years of obligation.** By agreeing to the terms herein, you agree to comply with the milestones identified below. If, for any reason, one or more of the milestones cannot be met, you must notify the Agency in writing at least 30 days prior to the referenced date. Should your final completion date become more than three years after obligation the written request will follow the procedures outlined in Section VI of this letter, including the submission of not less than 90 days prior to the benchmark. The correspondence must contain a valid explanation as to why the milestone cannot be met and include a proposed revised project completion schedule. If the Agency agrees to the modification, a written confirmation will be issued. The Agency reserves the right to de-obligate loan and/or grant funds, or take other appropriate action, if the established or amended deadlines are not met.

Milestone	Date
Design Phase	09/07/2022
Bid Process and Permitting	12/30/2022
Start Construction Period	01/16/2023
Substantial Completion	12/29/2023
Final Completion	06/12/2024

SECTION II – RATES & TERMS

5. Interest Rates and Loan Terms – The interest rate will be the lower of the rate in effect at the time of loan approval or the time of loan closing, unless you request otherwise. Should the interest rate be reduced, the payment will be recalculated to the lower amount. The payment due date will be established as the day that the loan closes.

Your loan will be scheduled for repayment over a period of 40 years. Payments will be equal monthly amortized installments, beginning one month after closing. For planning purposes, use a 1.25% interest which provides for a monthly payment of $4,821.00. The precise payment amount will be based on the interest rate at which the loan is closed and may be different than the one above.

6. Security – The loan will be secured by a General Obligation, Revenue, or Other bond with first, or parity lien position in the amount of $1,819,000.00. The bond will be fully registered as to both principal and interest in the name of the "United States of America, Acting through the United States Department of Agriculture." Bond Counsel will be utilized in preparation of these documents.

The bond/security instruments and any ordinance or resolution relating thereto must not contain any provision in conflict with the Agency Loan Resolution, applicable regulations, or associated laws. There must be no defeasance or refinancing clause in conflict with the graduation requirements of 7 U.S.C. 1983.

If the loan will be on parity with another lender/s, the bond/security instrument must specify that, in the event of default, each lender will be affected on a proportionate basis.

Additional security requirements are contained in RUS Bulletin 1780-27, "Loan Resolution (Public Bodies) and/or RUS Bulletin 1780-12, "Water and Waste System Grant Agreement". A draft of all security instruments, including draft bond resolution, must be reviewed and concurred in by the Agency prior to advertising for bids. Bond/loan resolutions must be duly adopted and executed prior to loan closing.

The Grant Agreement will be executed prior to the first disbursement of grant funds. The grantee understands that any property acquired or improved with Federal grant funds may have use and disposition conditions which apply to the property as provided by 2 CFR part 200 in effect at this time and as may be subsequently modified. The grantee understands that any sale or transfer of property is subject to the interest of the United States Government in the market value in proportion to its participation the project.

7. Reserves – Reserves must be properly budgeted and set aside to maintain the financial viability and sustainability of any operation. Reserves are important to fund unanticipated emergency repairs, to assist with debt service should the need arise, and for the replacement of assets which have a useful life less

than the repayment period of the loan. The following reserves are required to be established as a condition of this loan:

a. **Debt Service Reserve** – Unless a General Obligation Bond secures the lien, as a part of this Agency loan proposal, you must establish a debt service reserve fund equal to at least one annual loan installment that accumulates at the rate of 10% of one annual payment per year for ten years or until the balance is equal to one annual loan payment. For planning purposes, 10% of the proposed loan installment would equal $482.10 per month; this amount should be deposited monthly until a total of $57,852 has accumulated. Prior written concurrence from the Agency must be obtained before funds may be withdrawn from this account during the life of the loan. When funds are withdrawn during the life of the loan, deposits will continue as designated above until the fully funded amount is reached.

b. **Short-Lived Asset Reserve** – You must establish a short-lived asset reserve fund. Based on the PER, you must deposit at least $3,333 into the short-lived asset reserve fund annually for the life of the loan to pay for repairs and/or replacement of major system assets. It is your responsibility to assess your facility's short-lived asset needs on a regular basis and adjust the amount deposited to meet those needs.

SECTION III –REQUIREMENTS PRIOR TO ADVERTISING FOR BIDS

8. Organization – The Bond Counsel transcripts of proceedings must show that your organization is a duly incorporated public body and has continued legal existence. Your organization must have the authority to own, construct, operate, and maintain the proposed facility, as well as for borrowing money, pledging security and raising revenues.

9. Suspension and Debarment Screening – You will be asked to provide information on the principals of your organization. Agency staff must conduct screening for suspension and debarment of the entity, as well as its principals through the Do Not Pay Portal.

a. Principal –
    i. An officer, director, owner, partner, principal investigator, or other person within a participant with management or supervisory responsibilities related to a covered transaction; or
    ii. A consultant or other person, whether or not employed by the participant or paid with federal funds, who –
        1. Is in a position to handle federal funds;
        2. Is in a position to influence or control the use of those funds; or,
        3. Occupies a technical or professional position capable of substantially influencing the development or outcome of an activity required to perform the covered transaction. (2 CFR §180.995)

10. Environmental Requirements – The project, as proposed, has been evaluated to be consistent with the National Environmental Policy Act. Other Federal, State, tribal, and local laws, regulations and/or permits may apply or be required. If the project or any project element deviates from or is modified from the originally approved project, additional environmental review may be required.

This project has applied the Nationwide Programmatic Agreement Among the U.S. Department of Agriculture Rural Development Programs, National Conference of State Historic Preservation Officers,

and the Advisory Council on Historic Preservation for Sequencing Section 106 (NPA). This agreement allows the Agency to obligate funds prior to the completion of Section 106 of the National Historic Preservation Act. The Agreement stipulates, among other things, that the Section 106 process must be complete prior to the awarding of funds and prior to construction. Rural Development is in receipt of your signed NPA Awareness Certification form. In the Awareness Certification, you have acknowledged your awareness of these and other requirements and have agreed that you must complete the Section 106 process before the environmental review component of your application can be finalized and before construction. These historic preservation requirements must be met prior to final approval and prior to taking any action that would have an adverse effect on historic properties or hinder completion of the consultation process required under Section 106 of the National Historic Preservation Act (NHPA). Do not initiate any type of ground disturbing activity, enter into construction contracts, initiate construction, rehabilitation, or purchase land or equipment prior to receiving notification from the Agency that these requirements have been met. Taking any of these actions prior to completion of the required reviews could result in loss of program funds.

11. Engineering Services – You have been required to complete an Agreement for Engineering Services, which should consist of the Engineers Joint Contract Documents Committee (EJCDC) documents as indicated in RUS Bulletin 1780-26, "Guidance for the Use of EJCDC Documents on Water and Waste Projects with RUS Financial Assistance," or other approved form of agreement. The Agency will provide concurrence prior to advertising for bids and must approve any modifications to this agreement.

12. Contract Documents, Final Plans, and Specifications- All development will be completed by contract in accordance with applicable provisions of RUS Instruction 1780, Subpart C – Planning, Designing, Bidding, Contracting, Constructing and Inspections, (copy available upon request), and in compliance with all statutory requirements. You are responsible to share this with your engineer before pre-design.

a. The plans and specifications and all proposals required by law must be approved by Arizona Department of Environmental Quality.

b. In preparing final design and providing service to the planned project area, you and your engineer will comply with all zoning and planning requirements of the appropriate governing bodies where service is to be provided.

c. The Agency will need to concur in the plans and specifications prior to advertising for bids. The Agency may require an updated cost estimate if a significant amount of time has elapsed between the original project cost estimate and advertising for bids.

d. The use of any procurement method other than competitive sealed bids must be requested in writing and approved by the Agency.

e. The contract documents must consist of the EJCDC construction contract documents as indicated in RUS Bulletin 1780-26 or other Agency-approved forms of agreement.

f. **American Iron and Steel Requirements.** Section 746 of Title VII of the Consolidated Appropriations Act of 2017 (Division A - Agriculture, Rural Development, Food and Drug Administration, and Related Agencies Appropriations Act, 2017) and subsequent statutes

mandating domestic preference applies the American Iron and Steel (AIS) requirement to obligations made after May 5, 2017:

(1) No Federal funds made available for this fiscal year for the rural water, wastewater, waste disposal, and solid waste management programs authorized by the Consolidated Farm and Rural Development Act (7 U.S.C. 1926 et seq.) shall be used for a project for the construction, alteration, maintenance, or repair of a public water or wastewater system unless all of the iron and steel products used in the project are produced in the United States.
(2) The term "iron and steel products" means the following products made primarily of iron or steel: lined or unlined pipes and fittings, manhole covers and other municipal castings, hydrants, tanks, flanges, pipe clamps and restraints, valves, structural steel, reinforced precast concrete, and construction materials.
(3) The requirement shall not apply in any case or category of cases in which the Secretary of Agriculture (in this section referred to as the "Secretary") or the designee of the Secretary finds that—
   (a) applying the requirement would be inconsistent with the public interest;
   (b) iron and steel products are not produced in the United States in sufficient and reasonably available quantities or of a satisfactory quality; or
   (c) inclusion of iron and steel products produced in the United States will increase the cost of the overall project by more than 25 percent.
(4) Owners are ultimately responsible for compliance with AIS requirements (as defined in RUS Bulletin 1780-35).
   (a) ***Sign*** loan resolutions, grant agreements and letters of intent to meet conditions which include AIS language, accepting AIS requirements in those documents and in the letter of conditions.
   (b) ***Sign*** agreements for engineering services, executed construction contracts and all other appropriate and necessary documents which include AIS language.
   Change Orders and Partial Payment Estimates: ***Acknowledge*** responsibility for compliance with AIS requirements by signing change orders (EJCDC C-941) and partial payment estimates (EJCDC C-620).
   (c) Substantial completion of project: ***Obtain*** the certification letters from the consulting engineer and ***maintain*** this documentation for the life of the loan.
   (d) *Special Cases*
   i. Where Owner provides their own engineering, the Owner's responsibilities will include items listed in Section 5 of RUS Bulletin 1780-35.
   ii. Where Owner performs their own construction, the Owner's responsibilities will include items listed in Section 6 of RUS Bulletin 1780-35.
   iii. Where Owner directly procures AIS products, Owner must ***utilize*** EJCDC Procurement Series standard contract documents following RUS Bulletin 1780-26 Exhibit D and ***obtain*** manufacturers' certifications and provide copies to Engineer and Contractor.

13. Legal Services –A legal services agreement is required with your attorney and bond counsel, if applicable, for any legal work needed in connection with this project. The agreement should stipulate an hourly rate for the work, with a "not to exceed" amount for the services, including reimbursable expenses. RUS Bulletin 1780-7, "Legal Services Agreement," or similar format may be used. The Agency will provide concurrence prior to advertising for bids. Any changes to the fees or services spelled out in the original agreement must be reflected in an amendment to the agreement and have prior Agency concurrence.

14. **Property Rights** - Prior to advertising for bids, you and your legal counsel must furnish satisfactory evidence that you have adequate continuous and valid control over the lands and rights-of-way needed for the project. Acquisitions of necessary land and rights must be accomplished in accordance with the Uniform Relocation Assistance and Real Property Acquisition Policies Act. Such control over the lands and rights will be evidenced by the following:

a. **Right-of-Way Map** – Your engineer will provide a map clearly showing the location of all lands and rights-of-way needed for the project. The map must designate public and private lands and rights and the appropriate legal ownership thereof.
b. **Form RD 442-20, "Right-of-Way Easement"** – This form, or similar format, may be used to obtain any necessary easements for the proposed project.
c. **Form RD 442-21, "Right-of-Way Certificate"** – You will provide a certification on this form that all right-of-way requirements have been obtained for the proposed project.
d. **Form RD 442-22, "Opinion of Counsel Relative to Rights-of-Way"** – Your attorney will provide a certification and legal opinion on this form addressing rights-of-way, easements, and title.
e. Preliminary Title Work (Title Opinion) – When applicable, your attorney or title company will provide a preliminary title opinion for any property related to the facility, currently owned and to be acquired, along with copies of deeds, contracts or options for purchasing said property. Form RD 1927-9, "Preliminary Title Opinion," may be used.
e. Title Work (Title Insurance when a security interest is not taken in the real estate) – When applicable, your attorney or title company will secure an Owners' Title Insurance policy on all real estate to be acquired in connection with this project. This policy should be in an amount equal to the market value of the property as improved.

The approving official may waive title defects or restrictions, such as utility easements, that do not adversely affect the suitability, successful operation, security value, or transferability of the facility. Any such waivers must be provided by the approving official in writing prior to closing or the start of construction, whichever occurs first.

You are responsible for the acquisition of all property rights necessary for the project and for determining that prices paid are reasonable and fair. The Agency may require an appraisal by an independent appraiser or Agency employee in order to validate the price to be paid.

15. **System Policies, Procedures, Contracts, and Agreements** – The facility must be operated on a sound business plan which involves adopting policies, procedures, and/or ordinances outlining the conditions of service and use of the proposed system. Mandatory connection policies should be used where enforceable. The policies, procedures, and/or ordinances must contain an effective collection policy for accounts not paid in full within a specified number of days after the date of billing. They should include appropriate late fees, specified timeframes for disconnection of service, and reconnection fees. A draft of these policies, procedures, and/or ordinances must be submitted for Agency review and concurrence, along with the documents below, before closing instructions may be issued unless otherwise stated.

a. Conflict of Interest Policy – Prior to obligation of funds, you must certify in writing that your organization has in place up-to-date written standards of conduct covering conflict of interest. The standards of conduct must include disciplinary actions in the event of a violation by officers,

employees, or agents of the borrower. The standards identified herein apply to any parent, affiliate or subsidiary organization of the borrower that is not a state or local government, or Indian Tribe. Policies and accompanying documents shall be furnished to Rural Development upon request.

You must also submit a disclosure of planned or potential transactions related to the use of Federal funds that may constitute or present the appearance of personal or organizational conflict of interest. Disclosure must be in the form of a written letter signed and dated by the applicant's official. A negative disclosure in the same format is required if no conflicts are anticipated.

Sample conflict of interest policies may be found at the National Council of Nonprofits website, https://www.councilofnonprofits.org/tools-resources/conflict-of-interest, or in Internal Revenue Service Form 1023, Appendix A, "Sample Conflict of Interest Policy," at http://www.irs.gov/pub/irs-pdf/i1023.pdf. Though these examples reference non-profit corporations, the requirement applies to all types of Agency borrowers.

Assistance in developing a conflict of interest policy is available through Agency-contracted technical assistance providers if desired.

b. **Sewer User Agreement** – Projects not involving mandatory connection require users to execute a Water/Sewer Users Agreement. The draft agreement must receive Agency concurrence prior to advertising for bids. RUS Bulletin 1780-9, "Water Users Agreement," or similar format may be used.

c. **Contracts for Other Services/Lease Agreement** – Drafts of any contracts or other forms of agreements for other services, including audit, management, operation, and maintenance, or lease agreements covering real property essential to the successful operation of the facility, must be submitted to the Agency for review and concurrence prior to advertising for bids.

d. **Parity/Intercreditor Agreement** – Projects with parity liens must have in place a written agreement between the parity lenders. The draft agreement must receive Agency concurrence prior to advertising for bids.

Fully executed copies of any policies, procedures, ordinances, contracts, or agreements above must be submitted prior to loan closing, with the exception of the conflict of interest policy, which must be in place prior to obligation of funds.

16. Closing Instructions – The Agency will prepare closing instructions as soon as the requirements of the previous paragraphs are complete, as well as a draft of the security instrument(s). Both your bond and legal counsel must comply with these instructions when closing the Agency loan/grant. will change over each successive year and user rates will need to be adjusted on a regular basis.

17. System Users – This letter of conditions is based upon your indication at application that there will be at least 173 residential users, 73 non-residential users, and no bulk / wholesale users on the existing and/or proposed system when construction is completed.

Before the Agency can agree to the project being advertised for construction bids, you must certify that the number of users indicated at application are currently using the system or signed up to use the system once it is operational.

If the actual number of existing and/or proposed users that have signed up for service is less than the number indicated at the time of application, you must provide the Agency with a written plan on how you will obtain the necessary revenue to adequately cash flow the expected operation, maintenance, debt service, and reserve requirements of the proposed project (e.g., increase user rates, sign up an adequate number of other users, reduce project scope, etc.). Similar action is required if there is cause to modify the anticipated flows or volumes presented following approval.

If you are relying on mandatory connection requirements, you must provide evidence of the authorizing ordinance or statute along with your user certification.

If project does not involve mandatory connections, you must provide the following:

a. **Positive Program to Encourage Connections** – You must provide a positive program to encourage connection by all users as soon as service is available. The program will be reviewed by the Agency prior to advertising for bids. A guide for developing your positive program is available from the Agency.
b. **Sewer User Agreements** – Users will be required to execute a Sewer Users Agreement prior to advertising for construction bids. The amount of cash contributions required will be set by you and concurred with by the Agency. Contributions should be an amount high enough to indicate sincere interest on the part of the potential user, but not so high as to preclude service to low-income families, and must have a deadline for the contribution to be used or forfeited. RUS Bulletin 1780-9, "Water Users Agreement," or similar agreement may be used.
c. **Service Declination Statement** – Each potential user who is located along planned lines and declines the offered service will be provided an opportunity to sign a "Service Declination Statement."

18. <u>Construction Account</u> – A separate construction account, subject to Agency audit, will be established for deposit of all project funds. These funds must be deposited in a bank with Federal Deposit Insurance Corporation (FDIC) insurance coverage. **If the balance in the account containing these funds exceeds the FDIC insurance coverage, the excess amount must be collaterally secured.** A separate account will not be required for Federal funds and other funds; however, the recipient must be able to separately identify, report and account for all Federal funds, including the receipt, obligation and expenditure of funds. Financial institutions or depositaries accepting deposits of public funds and providing other financial agency services to the Federal Government are required to pledge adequate, acceptable securities as collateral, in accordance with 202.6, 31 CFR Part 202. All funds in the account will be secured by a collateral pledge equaling at least 100 percent of the highest amount of funds expected to be deposited in the construction account at any one time.

19. <u>Interim Financing</u> – The Agency's policy is to utilize interim financing for all loans exceeding $500,000. Prepayment penalties on interim financing are not allowed. Borrowers are required to seek interim financing initially from private or cooperative lenders if funds can be borrowed at reasonable interest rates on an interim basis from those sources for the construction period. The fact that a commercial lender's rates are higher than current Agency interest rates does not necessarily mean that the commercial rate is not reasonable.

20. <u>Proposed Operating Budget</u> – You must establish and/or maintain a rate schedule that provides adequate income to meet the minimum requirements for operation and maintenance (O and M), debt service, and reserves. Prior to advertising for bids, you must submit a proposed annual operating budget to the Agency, as well as your proposed rate schedule. The operating budget should be based on a typical

year cash flow after completion of the construction phase and should be signed by the appropriate official of your organization. Form RD 442-7, "Operating Budget," or similar format may be utilized for this purpose. It is expected that O and M expenses will change over each successive year and user rates will need to be adjusted on a regular basis.

Technical assistance is available at no cost to help you evaluate and complete a rate analysis on your system. This assistance is available free to your organization. If you are interested, please contact our office for information.

21. Permits –The owner or responsible party will be required to obtain all applicable permits for the project, prior to advertising for bids. The consulting engineer must submit written evidence that all applicable permits required prior to construction have been obtained with submission to the Agency of the final plans, specifications, and bid documents.

22. Risk and Resilience Assessment/Emergency Response Plan (RRA/ERP) – The Agency requires all financed water and wastewater systems to have a RRA/ERP in place. New water or wastewater systems must provide a certification that an ERP is complete prior to the start of operation, and a certification that an RRA is complete must be submitted within one year of the start of operation. Borrowers with existing systems must provide a certification that an RRA/ERP has been completed prior to advertising for bids. Technical assistance is available in preparing these documents at no cost to you.

The RRA/ERP documents themselves are not submitted to the Agency. The RRA/ERP must address potential impacts from natural disasters and other emergency events. It should include plans to address impacts of flash flooding in areas where severe drought or wildfires occur. The documents should be reviewed and updated every five years at a minimum.

23. Bid Authorization - Once all the conditions outlined in Section III of this letter have been met, the Agency will authorize you to advertise the project for construction bids. Such advertisement must be in accordance with applicable State statutes.

SECTION IV - REQUIREMENTS PRIOR TO START OF CONSTRUCTION

24. Disbursement of Agency Funds - Agency funds will be disbursed electronically into the construction account as they are needed. SF 3881, "ACH Vendor/Miscellaneous Payment Enrollment Form," must be completed and submitted to the Agency prior to commencement of construction.

The order of disbursement is as follows: 1) Applicant contribution, 2) other funding sources, 3) interim financing or Agency loan funds, and 4) Agency grant funds. Interim financing or Agency loan funds will be expended after all other funding sources unless a written agreement is reached with all other funding sources on how funds are to be disbursed prior the first disbursement. Interim financing funds or Agency loan funds must be used prior to the use of Agency grant funds. Agency Grant funds must not be disbursed prior to loan funds except as authorized in 7 CFR 1780.45(d).

Grant funds are to be deposited in an interest-bearing account (exception provided below) in accordance with 2 CFR Part 200 and interest in excess of $500 per year remitted to the Agency. The funds should be disbursed by the recipient immediately upon receipt, and there should be little interest accrual on the Federal funds. Recipients shall maintain advances of Federal funds in interest-bearing accounts, unless:

- The recipient receives less than $120,000 in Federal awards per year.
- The best reasonably available interest-bearing account would not be expected to earn interest in excess of $500 per year on Federal cash balances.
- The depository would require an average or minimum balance so high that it would not be feasible within the expected Federal and non-Federal cash resources.
- A foreign government or banking system prohibits or precludes interest-bearing accounts.

25. Bid Tabulation – Immediately after bid opening, you must provide the Agency with the bid tabulation and your engineer's evaluation of bids and recommendations for contract awards. If the Agency agrees that the construction bids received are acceptable, adequate funds are available to cover the total project costs, and all the requirements of Section III of this letter have been satisfied, the Agency will authorize you to issue the Notice of Award.

a. **Cost Overruns –** If bids are higher than expected, or if unexpected construction problems are encountered, you must utilize all options to reduce cost overruns. Negotiations, redesign, use of bidding alternatives, rebidding or other means will be considered prior to commitment of subsequent funding by the Agency. Any requests for subsequent funding to cover cost overruns will be contingent on the availability of funds. Cost overruns exceeding 20 percent of the development cost at time of loan or grant approval or where the scope of the original purpose has changed will compete for funds with all other applications on hand as of that date.
b. **Excess Funds** - If bids are lower than anticipated at time of obligation, excess funds must be deobligated prior to start of construction except in the cases addressed in this paragraph. In cases where the original PER for the project included items that were not bid, or were bid as an alternate, the State Office official may modify the project to fully utilize obligated funds for those items. Amendments to the PER, ER, and Letter of Conditions may be needed for any work not included in the original project scope. In all cases, prior to start of construction, excess funds will be deobligated, with grant funds being deobligated first. Excess funds do not include contingency funds as described in this letter.

26. Suspension and Debarment Screening – In accordance with 2 CFR Part 180, Subpart C, as a condition of the transaction and the responsibilities to persons at the next lower tier with whom you enter into transactions, you must conduct screening for suspension and debarment of lower tier recipients (e.g., vendors, contractors, etc.).

27. Contract Review – Your attorney will certify that the executed contract documents, including performance and payment bonds, if required, are adequate and that the persons executing these documents have been properly authorized to do so in accordance with 7 CFR 1780.61(b).

Once your attorney has certified that they are acceptable, the contract documents will be submitted to the Agency for concurrence. Construction cannot commence until the Agency has concurred in the construction contracts.

28. Final Rights of Way – Your attorney or title company must furnish a separate final title opinion or Title Insurance Policy on all real property related to the facility, now owned and to be acquired for this project, as of the day of loan closing or start of construction, whichever occurs first. Form RD 1927-10, "Final Title Opinion" may be used.

If any of the right-of-way forms listed previously in this letter contain exceptions that do not adversely affect the suitability, successful operation, security value, or transferability of the facility, the approving official must provide a written waiver prior to the issuance of the Notice to Proceed.

29. Insurance and Bonding Requirements - Prior to the start of construction or loan closing, whichever occurs first, you must acquire and submit to the Agency proof of the types of insurance and bond coverage for the borrower shown below. The use of deductibles may be allowed, providing you have the financial resources to cover potential claims requiring payment of the deductible. The Agency strongly recommends that you have your engineer, attorney, and insurance provider(s) review proposed types and amounts of coverage, including any exclusions and deductible provisions. It is your responsibility and not that of the Agency to assure that adequate insurance and fidelity bond coverage is maintained.

a. **General Liability Insurance** – Include vehicular coverage.
b. **Workers' Compensation** – In accordance with appropriate State laws.
c. **Guaranty or Fidelity Insurance**–Coverage for all persons who have access to funds, including persons working under a contract or management agreement. Coverage may be provided either for all individual positions or persons, or through "blanket" coverage providing protection for all appropriate employees. Each position is to be insured in an amount equal to the maximum amount of funds expected to be under the control of that position at any one time. The minimum coverage allowed will be an amount equal to the total annual debt service payment on the Agency loans. The coverage may be increased during construction based on the anticipated monthly advances.
d. **National Flood Insurance** - If the project involves acquisition or construction in a designated special flood area, the community in which the acquisition or construction is situated must be currently participating in the national flood insurance program. Additionally, if the project involves acquisition or constriction in designated special flood or mudslide prone areas, a flood insurance policy must be in place at the time of loan closing.
e. **Real Property Insurance** – Fire and extended coverage will normally be maintained on all structures except reservoirs, pipelines and other structures if such structures are not normally insured, and subsurface lift stations except for the value of electrical and pumping equipment. The Agency will be listed as mortgagee on the policy when the Agency has a lien on the property. Prior to the acceptance of the facility from the contractor(s), you must obtain real property insurance (fire and extended coverage) on all facilities identified above.

The Agency is to be listed as "Other Insured" so as to receive notifications on all insurance, regardless of security. Insurance types described above are required to be continued throughout the life of the loan. See Section VII.

30. Initial Civil Rights Compliance Review – The Agency will conduct an initial civil rights compliance review of the borrower prior to loan closing or start of construction, whichever occurs first, in accordance with 7 CFR 1901, Subpart E. You are expected to comply with the completion of the review, including the furnishing of any documents, records, or other applicable material.

SECTION V – REQUIREMENTS PRIOR TO CLOSING

31. Interim Financing. Interim financing is being used. Generally, loan closing will occur near the end of construction when interim funds are fully disbursed. Documents detailed above from Sections II and III regarding security, electronic payments (Form 3550-28), and system policies, procedures, contracts, and agreements must be adopted and/or executed and submitted to the Agency prior to loan closing.

32. Electronic Payments – Payments will be made through an electronic preauthorized debit system. You will be required to complete Form RD 3550-28, "Authorization Agreement for Preauthorized Payments," for all new and existing indebtedness to the Agency prior to loan closing.

33. Other Requirements – All requirements contained in the Agency's closing instructions, as well as any requirements of your bond counsel and/or attorney, must be met prior to loan closing.

a. **System for Award Management**. You will be required to maintain a Dun and Bradstreet Data Universal Numbering System (DUNS) number and maintain an active registration in the System for Award Management (SAM) database. Renewal can be completed online at: http://sam.gov. This registration must be renewed and revalidated every 12 months for as long as there is an active loan, grant, or guaranteed loan with the Agency.

   To ensure the information is current, accurate and complete, and to prevent the SAM account expiration, the review and updates must be performed within 365 days of the activation date, commonly referred to as the expiration date. The registration process may take up to 10 business days. (See 2 CFR Part 25 and the "Help" section at http://sam.gov).

b. **Litigation.** You are required to notify the Agency within 30 days of receiving notification of being involved in any type of litigation prior to loan closing or start of construction, whichever occurs first. Additional documentation regarding the situation and litigation may be requested by the Agency.

c. **Certified Operator**. Evidence must be provided that your system has or will have a certified operator, as defined by applicable State or Federal requirements, available prior to the system becoming operational, or that a suitable supervisory agreement with a certified operator is in effect.

SECTION VI – REQUIREMENTS DURING CONSTRUCTION AND POST CONSTRUCTION

34. Construction Completion Timeframe – Following the benchmarks established in Section I, Item 4, Project Timeline, all projects should be completed and Agency funds fully disbursed within three years of the date of obligation. If funds are not disbursed within three years of obligation and you have not already done so per Section I, Item 4, you must submit a written request for extension of time to the Agency with adequate justification of the circumstances, including any beyond your control. The request must be submitted at least 90 days prior to the end of the three-year timeframe and include a revised estimated date of completion. The Agency will typically only allow one extension. Subsequent requests for waivers beyond the initial extension or requests that exceed five years from the initial date of obligation will be submitted to the RUS, Water and Environmental Programs for consideration. The Agency retains the right to de-obligate any loan and/or grant monies, or take other appropriate action, related to unliquidated funds that exceed the timeframes above and are not under an active extension.

35. Resident Inspector(s) – Full-time inspection is required unless you request an exception. Such requests must be made in writing and the Agency must provide written concurrence. Inspection services are to be provided by the consulting engineer unless other arrangements are requested in writing and concurred with by the Agency. A resume of qualifications of any resident inspector(s) will be submitted

to the owner and Agency for review and concurrence prior to the pre-construction conference. The resident inspector(s) must attend the preconstruction conference.

36. Preconstruction Conference – A preconstruction conference will be held prior to the issuance of the Notice to Proceed. The consulting engineer will review the planned development with the Agency, owner, resident inspector, attorney, contractor, other funders, and other interested parties, and will provide minutes of this meeting to the owner and Agency.

37. Inspections - The Agency requires a preconstruction conference, pre-final, final, and warranty inspections. Your engineer will schedule a warranty inspection with the contractor and the Agency before the end of the [one-year] warranty period to address and/or resolve any outstanding warranty issues. The Agency will conduct an inspection with you of your records management system at the same time and will continue to inspect the facility and your records system every three years for the life of the loan. See Section VII of this letter.

38. Change Orders – A Change Order must be submitted for all modifications to the approved scope of work, including existing contracts. This includes non-physical modifications such as any time extension requests. Prior written Agency concurrence is required for all Change Orders.

39. Payments – Prior Agency concurrence is required for all invoices and requests for payment before Agency funds will be released. Requests for payment related to a contract or service agreement will be signed by the owner, project engineer, and contractor or service provider prior to Agency concurrence. Invoices not related to a construction contract or service agreement will include the owner's written concurrence.

40. Use of Remaining Funds – As stated above, applicant contribution and connection or tap fees will be the first funds expended in the project. Funds remaining after all costs incident to the basic project have been paid or provided will be handled as follows:

a. Funds remaining after the applicant contribution and connection fees may be considered in direct proportion to the amounts of funding obtained from each source. The use of Agency funding will be limited to eligible loan and grant purposes, provided the use will not result in major changes to the original scope of work and the purpose of the loan and grant remains the same.
b. Any reductions in the Agency funding will be first applied to the grant funds.
c. Grant funds not expended for authorized purposes will be cancelled (de-obligated) within 90 days of final completion of project. Prior to actual cancellation, you, your attorney and engineer will be notified of the Agency's intent to cancel the remaining funds and given appropriate appeal rights.
d. Under no circumstances is it appropriate to use remaining funds as contributions to a new project outside the scope of the funded project.
e. Loan funds that are not needed will be cancelled (de-obligated) prior to loan closing.

41. Technical, Managerial and Financial Capacity - It is required that members of the Board of Directors, City Council members, trustees, commissioners and other governing members possess the necessary technical, managerial, and financial capacity skills to consistently comply with pertinent Federal and State laws and requirements. It is recommended members receive training within one year of appointment or election to the governing board, and a refresher training for all governing members on a routine basis. The content and amount of training should be tailored to the needs of the individual and the

utility system. Technical assistance providers are available to provide this training for your organization, often at no cost. Contact the Agency for additional information.

42. Reporting Requirements Related to Expenditure of Funds -- An annual audit under 2 CFR 200 is required if you expend $750,000 or more in Federal financial assistance per fiscal year. The total Federal funds expended from all sources shall be used to determine Federal financial assistance expended. Expenditures of interim financing are considered Federal expenditures.

All audits are to be performed in accordance with 2 CFR Part 200, as adopted by USDA through 2 CFR Part 400. Further guidance on preparing an acceptable audit can be obtained from the Agency. The audit must be prepared by an independent licensed Certified Public Accountant, or a State or Federal auditor if allowed by State law and must be submitted within 9 months of your fiscal year end. Both the audit and accompanying management report must be submitted for review.

If an audit is required, you must enter into a written agreement with the auditor and submit a copy of that agreement to the Agency prior to the advertisement of construction bids. The audit agreement may include terms and conditions that the borrower and auditor deem appropriate; however, the agreement should include the type of audit to be completed, the time frame in which the audit will be completed, and how irregularities will be reported.

SECTION VII – SERVICING REQUIREMENTS DURING THE TERM OF THE LOAN

43. Prepayment and Extra Payments - Prepayments of scheduled installments, or any portion thereof, may be made at any time at the option of borrower, with no penalty.

Security instruments, including bonding documents, must contain the following language regarding extra payments, unless prohibited by State statute:

> *Prepayments of scheduled installments, or any portion thereof, may be made at any time at the option of borrower. Refunds, extra payments and loan proceeds obtained from outside sources for the purpose of paying down the Agency debt, shall, after payment of interest, be applied to the installments last to become due under this note and shall not affect the obligation of borrower to pay the remaining installments as scheduled in your security instruments.*

44. Annual Financial Reporting/Audit Requirements – You are required to submit an annual financial report at the end of each fiscal year. The annual report will be certified by the appropriate organization official, and will consist of financial information, a current rate schedule, and listing of board members with their terms. Financial statements must be prepared on an accrual basis of accounting in accordance with generally accepted accounting principles (GAAP). The annual report will include separate reporting for each water and waste disposal facility, and itemized cash accounts by type (debt service, short-lived assets, etc.) under each facility. All records, books and supporting material are to be retained for three years after the issuance of the annual report. Technical assistance is available, at no cost, with preparing financial reports.

The type of financial information that must be submitted is specified below:

a. **Audits** – An audit under the Single Audit Act is required if you expend $750,000 or more in Federal financial assistance per fiscal year. The total Federal funds expended from all sources

shall be used to determine Federal financial assistance expended. Expenditures of interim financing are considered Federal expenditures.

See Section VI for additional information regarding audits.

b. **Financial Statements** – If you expend less than $750,000 in Federal financial assistance per fiscal year, you may submit financial statements in lieu of an audit which include, at a minimum, a balance sheet and an income and expense statement. You may use Form RD 442-2, "Statement of Budget, Income and Equity," and 442-3, "Balance Sheet," or similar format to provide the financial information. The financial statements must be signed by the appropriate borrower official and submitted within 60 days of your fiscal year end.

c. **(if applicable) Quarterly Reports** – Quarterly Income and Expense Statements will be required until the processing office waives this requirement. You may use Form RD 442-2, "Statement of Budget, Income and Equity," or similar format to provide this information. The reports are to be signed by the appropriate borrower official and submitted within 30 days of each quarter's end. The Agency will notify you in writing when quarterly reports are no longer required.

45. Annual Budget and Projected Cash Flow - Thirty days prior to the beginning of each fiscal year, you will be required to submit an annual budget and projected cash flow to this office. The budget must be signed by the appropriate borrower official. Form RD 442-2, "Statement of Budget, Income and Equity," or similar format may be used.

Technical assistance is available at no cost to help you evaluate and complete a rate analysis on your system, as well as completing the annual budget.

46. Graduation - By accepting this loan, you are also agreeing to refinance (graduate) the unpaid loan balance in whole, or in part, upon request of the Government. If at any time the Agency determines you can obtain a loan for such purposes from responsible cooperative or private sources at reasonable rates and terms, you will be requested to refinance. Your ability to refinance will be assessed every other year for those loans that are five years old or older.

47. Security/Operational Inspections – The Agency will inspect the facility and conduct a review of your operations and records management system and conflict of interest policy every three years for the life of the loan. You must participate in these inspections and provide the required information.

48. System for Award Management. You will be required to maintain a Dun and Bradstreet Data Universal Numbering System (DUNS) number and maintain an active registration in the System for Award Management (SAM) database. Further information can be found at paragraph 34 of this letter.

49. Risk and Resiliency Assessment/Emergency Response Plan (RRA/ERP) – The RRA/ERP is further outlined under Section III of this letter. You will be required to submit a certification to the servicing office every five years that the RRA/ERP is current and covers all sites related to the facility. The RRA/ERP documents themselves are not submitted to the Agency. The RRA/ERP must address potential impacts from natural disasters and other emergency events. It should include plans to address impacts of flash flooding in areas where severe drought or wildfires occur. Technical assistance is available in preparing these documents at no cost to you.

50. Insurance. – Insurance requirements are further outlined in Section IV of this letter. You will be required to maintain insurance on the facility and employees as previously described in this letter for the life of the loan.

51. Statutory and National Policy Requirements – As a recipient of Federal funding, you are required to comply with U.S. statutory and public policy requirements, including but not limited to:

a. **Section 504 of the Rehabilitation Act of 1973** – Under Section 504 of the Rehabilitation Act of 1973, as amended (29 U.S.C. 794), no handicapped individual in the United States shall, solely by reason of their handicap, be excluded from participation in, be denied the benefits of, or be subjected to discrimination under any program or activity receiving Agency financial assistance.

b. **Civil Rights Act of 1964** – All borrowers are subject to, and facilities must be operated in accordance with, Title VI of the Civil Rights Act of 1964 (42 U.S.C. 2000d et seq.) and 7 CFR 1901, Subpart E, particularly as it relates to conducting and reporting of compliance reviews. Instruments of conveyance for loans and/or grants subject to the Act must contain the covenant required by Paragraph 1901.202(e) of this Title.

c. **The Americans with Disabilities Act (ADA) of 1990** – This Act (42 U.S.C. 12101 et seq.) prohibits discrimination on the basis of disability in employment, State and local government services, public transportation, public accommodations, facilities, and telecommunications.

d. **Age Discrimination Act of 1975** – This Act (42 U.S.C. 6101 et seq.) provides that no person in the United States shall on the basis of age, be excluded from participation in, be denied the benefits of, or be subjected to discrimination under any program or activity receiving Federal financial assistance.

e. **Limited English Proficiency (LEP) under Executive Order 13166** - LEP statutes and authorities prohibit exclusion from participation in, denial of benefits of, and discrimination under Federally-assisted and/or conducted programs on the ground of race, color, or national origin. Title VI of the Civil Rights Act of 1964 covers program access for LEP persons. LEP persons are individuals who do not speak English as their primary language and who have a limited ability to read, speak, write, or understand English. These individuals may be entitled to language assistance, free of charge. You must take reasonable steps to ensure that LEP persons receive the language assistance necessary to have meaningful access to USDA programs, services, and information your organization provides. These protections are pursuant to Executive Order 13166 entitled, "Improving Access to Services by Persons with Limited English Proficiency" and further affirmed in the USDA Departmental Regulation 4330-005, "Prohibition Against National Origin Discrimination Affecting Persons with Limited English Proficiency in Programs and Activities Conducted by USDA."

f. **Controlled Substances Act** - Even though state law may allow some activities, as a recipient of Federal funding, you are subject to the Controlled Substances Act. Specific questions about the Controlled Substances Act should be directed to the Servicing Official who will contact the Office of General Counsel, as appropriate.

52. <u>Compliance Reviews and Data Collection</u> – Agency financial programs must be extended without regard to race, color, religion, sex, national origin, marital status, age, or physical or mental handicap. You must display posters (provided by the Agency) informing users of these requirements, and the Agency will monitor your compliance with these requirements during regular compliance reviews.

The Agency will conduct regular compliance reviews of the borrower and its operation in accordance with 7 CFR Part 1901, Subpart E, and 36 CFR 1191, Americans with Disabilities Act (ADA) Accessibility Guidelines for Buildings and Facilities; Architectural Barriers Act (ABA) Accessibility Guidelines. Compliance reviews will typically be conducted in conjunction with the security inspections described in this letter.

If beneficiaries (users) are required to complete an application or screening for the use of the facility or service that you provide, you must request and collect data by race (American Indian or Alaska Native, Asian, Black or African American, White); ethnicity (Hispanic or Latino, Not Hispanic or Latino); and by sex. The Agency will utilize this data as part of the required compliance review.

<u>SECTION VIII – REMEDIES FOR NON-COMPLIANCE</u>

Non-compliance with the conditions in this letter or requirements of your security documents will be addressed under the provisions of Agency regulations, statutes, and other applicable policies.

We look forward to working with you to complete this project. If you have any questions, please contact Michael Dean at 928-910-4471 or by e-mail at Michael.dean2@usda.gov.

Sincerely,

JEFFREY A. HAYS
Community Programs Director

Attachments

cc: Community Programs Director
Accountant
Attorney
Bond Counsel
Engineer

FORMS and BULLETINS:

Form AD-3031 “Assurance Regarding Felony Convictions or Tax Delinquent Status for Corporate Applicants” – Item 30
Internal Revenue Service Form 1023, Appendix A, “Sample Conflict of Interest Policy” - Item 15
Form RD 440-22, “Promissory Note” – Item 6
Form RD 442-2, “Statement of Budget, Income and Equity” – Items 45 and 46
Form RD 442-3, “Balance Sheet” – Item 45
Form RD 442-7, “Operating Budget” – Item 20
Form RD 442-20, “Right-of-Way Easement” – Item 14
Form RD 442-21, “Right-of-Way Certificate” – Item 14
Form RD 442-22, “Opinion of Counsel Relative to Rights-of-Way” – Item 14
Form RD 1927-9, “Preliminary Title Opinion” – Item 14
Form RD 1927-10, “Final Title Opinion” – Item 28
Form RD 1940-1, “Request for Obligation of Funds” – Pages 1 and 2
Form RD 1942-8, “Resolution of Members or Stockholders” – Item 6
Form RD 1942-46, “Letter of Intent to Meet Conditions” – Page 2
Form RD 3550-28, “Authorization Agreement for Preauthorized Payments” – Items 32 and 33
Form UCC-1, “Financing Statement” – Item 6
Form UCC-1Ad, “UCC Financing Statement Addendum” – Item 6
SF 3881, “ACH Vendor/Miscellaneous Payment Enrollment Form” – Item 24
RUS Bulletin 1780-7, “Legal Services Agreement” – Item 13
RUS Bulletin 1780-9, “Water Users Agreement” - Items 15 and 17
RUS Bulletin 1780-12, “Water and Waste System Grant Agreement” – Item 6
RUS Bulletin 1780-26, “Guidance for the Use of EJCDC Documents on Water and Waste Projects with RUS Financial Assistance” – Items 11 and 12
RUS Bulletin 1780-27, “Loan Resolution (Public Bodies)” – Item 6
RUS Bulletin 1780-28, “Loan Resolution Security Agreement” – Item 6

Appendix A

A. Reporting Total Compensation of Recipient Executives

In the rare instance in which all of the following apply, please contact your POB Specialist for language to include in the LOC:

1. The total Federal funding authorized to date under this award is $30,000 or more;

2. In the preceding fiscal year, the applicant received—

   (A) 80 percent or more of their annual gross revenues from Federal procurement contracts (and subcontracts) and Federal financial assistance subject to the Transparency Act, as defined at 2 CFR 170.320 (and subawards); and

   (B) $25,000,000 or more in annual gross revenues from Federal procurement contracts (and subcontracts) and Federal financial assistance subject to the Transparency Act, as defined at 2 CFR 170.320 (and subawards); and

3. The public does not have access to information about the compensation of the executives through periodic reports filed under section 13(a) or 15(d) of the Securities Exchange Act of 1934 (15 U.S.C. 78m(a), 78o(d)) or section 6104 of the Internal Revenue Code of 1986. (To determine if the public has access to the compensation information, see the U.S. Security and Exchange Commission total compensation filings at http://www.sec.gov/answers/execomp.htm.)

B. Subaward and Subrecipients

In the rare instance in which there is a subrecipient in the project, please contact your POB Specialist for language to include in the LOC:

Subrecipient means an entity that:

i. Receives a subaward from the recipient under this award; and

ii. Is accountable to the recipient for the use of the Federal funds provided by the subaward.

a. Subaward means an award provided by a pass-through entity to a subrecipient for the subrecipient to carry out part of a Federal award received by the pass-through entity. It does not include payments to a contractor or payments to an individual that is a beneficiary of a Federal program.

EXHIBIT

±2.50 ACRES

LOCATED IN SECTION 23, T.16N., R.2E.,
GILA & SALT RIVER MERIDIAN,
YAVAPAI COUNTY, ARIZONA

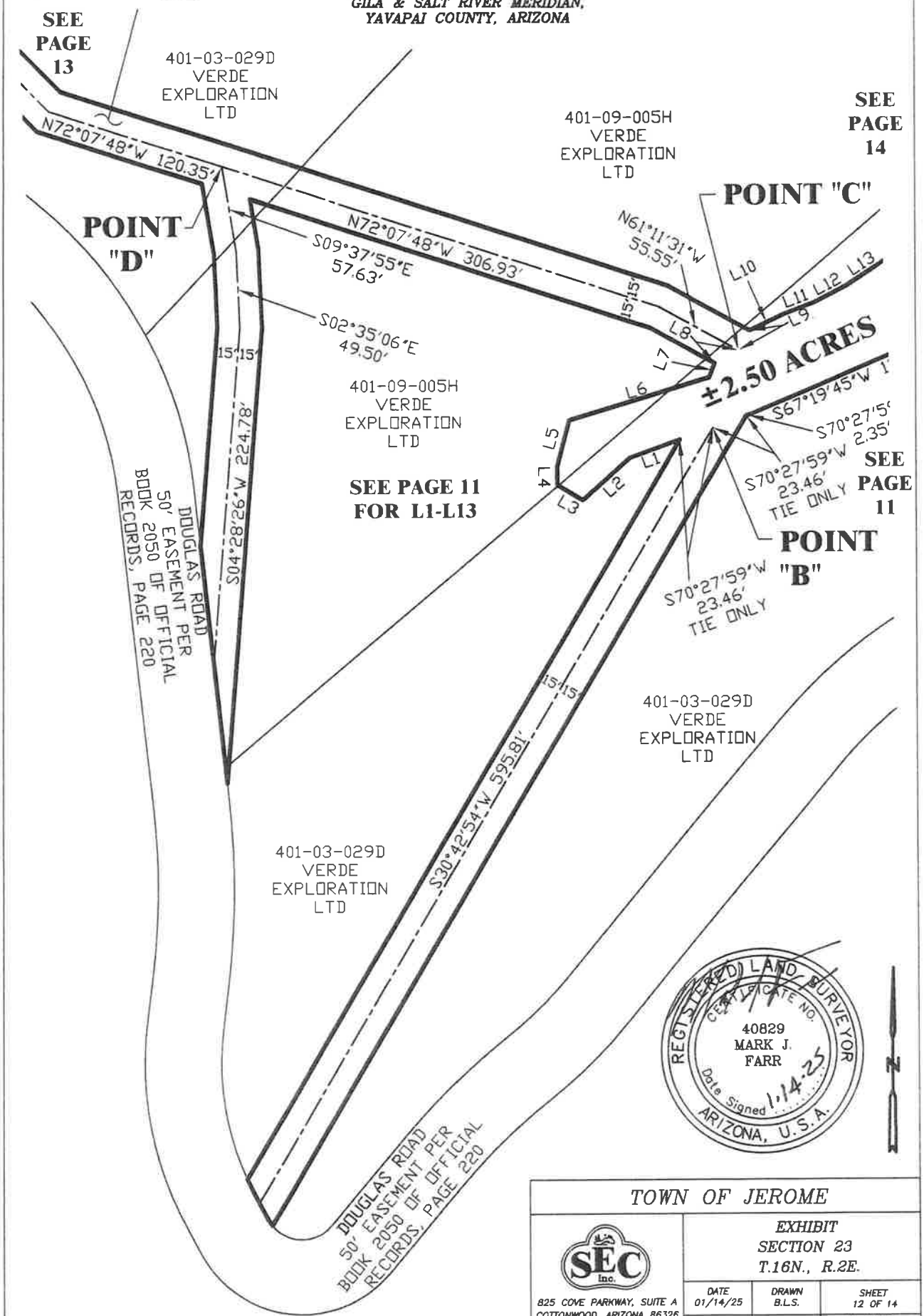

TOWN OF JEROME		
SEC Inc. 825 COVE PARKWAY, SUITE A COTTONWOOD, ARIZONA 86326 (928) 634-5889 www.sec-landmgt.com	EXHIBIT SECTION 23 T.16N., R.2E.	
	DATE 01/14/25	DRAWN B.L.S.
	SHEET 12 OF 14	
	SCALE NONE	CHECKED M.J.F.
	19-1101CE Town Jerome "Exhibit.dwg"	

Town of Jerome
Pre-Bid Meeting Sign-In Sheet

Thursday, May 12, 2026
2:00 PM

Town of Jerome WWTP Improvements Pre-Bid Meeting Sign-In

Company	Contact Name	Phone	Email Address
Winwater of Phoenix	Austin Malcom	308-224-5283	apmalcom@winsupply.com
Winwater PHX	Griffin Dvinack	320-212-5535	griffin@PHXWinWater.com
TECHNOLOGY CONSTRUCTION	GARRETT SWEETLAND	602-292-7871	garrett@TCIAZ.NET
KLEAR CIVIL CORP	GARRY HAGDEM	623-742-8329	garry.hagdem@KCORPCORP.com
HAYDON CONSTRUCTION	MIKE SHIPLEY	480.901.0537 ~~480-32~~	MSHIPLEY@HAYDON.COM
~~[illegible]~~			
Eagle Mtn	Travis Johanson	928-22-0-0767	Travis@Emcaz.com
EAGLE MNT CONST	JASON WOODS	928-600-1107	JASON.WOODS@EMCAZ.COM
L&M PAINTING	GILLES BUSSIERES	602-576-2710	GILLES@LMPAINTINGCO.COM
SEC	Richard Noone	928 634 5889	rnoone@sec-landmgt.com

Town of Jerome
Pre-Bid Meeting Sign-In Sheet

Thursday, May 12, 2026
2:00 PM

Town of Jerome WWTP Improvements Pre-Bid Meeting Sign-In

Company	Contact Name	Phone	Email Address
Hensel Phelps	Larry V. Tackett	623-698-1186	ltackett@henselphelps.com
Kasey Martin	Rain For Rent	480-276-5068	Kmartin@rainforrent.com
LOENBRO	JON CAMPING	406 231 7293	JCAMPING@LOENBRO.COM
B4 Enterprises	Kedrick Jessop	435-704-6583	Kedrick@b4concrete.com
FANN Environmental	David Syme	928-308-6812	dimsyme@FANNENVIRONMENTAL.com
VIRTUAL ATTENDEES			
FILANC	Klete Rogers		krogers@filanc.com
FILANC	Dan East		deast@filanc.com
PACE	Duong Do	(714) 481-7223	do@pacewater.com
PACE	Andrea Jaycox	(602) 502-9683	ajaycox@pacewater.com
PACE	Nathan Tesch	(602) 695-4679	ntesch@pacewater.com
Superior Underground Services	Chris White	480-261-7800	cwhite@superiorundergroundservices.com

CEMETERY FENCELINE
END EASEMENT C
BEGIN EASEMENTS D & Y

TEMP. EASEMENT Y
50'w x 235 LF +/-

BEGIN IMPROVED ROAD
TO TREATMENT PLANT AT
FENCELINE

EASEMENT D
28'w x 235 LF +/-

EXISTING CEMETERY ROAD
SEE NOTE 1

CEMETERY

401-03-001L
TOWN OF JEROME

401-03-043C
JEROME VERDE DEVELOPMENT LLC

EASEMENT C
16'w x 1009 LF
SEE NOTE 1

END EASEMENTS D & Y AT PROPERTY LINE

174.92'

401-03-001C
STEWART

IMPROVED ROAD TO
TREATMENT PLANT

WASTEWATER TREATMENT PLANT

CEMETERY FENCELINE
END EASEMENT B
BEGIN EASEMENT C

8" ELECTRIC EASEMENT
BOOK 1080 DAL, PAGE 622

EXISTING GRAVEL
PARKING AREA

EASEMENT B
26'w x 74 LF

401-03-001P
JEROME VERDE DEVELOPMENT LLC

MH-11

TEMP. EASEMENT X
50'w x 180 LF +/-

EASEMENT A
26'w x 177 LF

SEE ENLARGEMENT

401-03-001N
TOWN OF JEROME

401-11-0031A
CROSBY

401-11-007C
LEACHMAN

401-11-006

401-11-005B

401-11-005A

401-11-004

401-11-003

401-11-002C

401-11-002B

401-11-002A

401-11-001

NORTH DR

THIS BLDG
HAS BEEN
REMOVED

401-11-008
McWHIRTER

89A

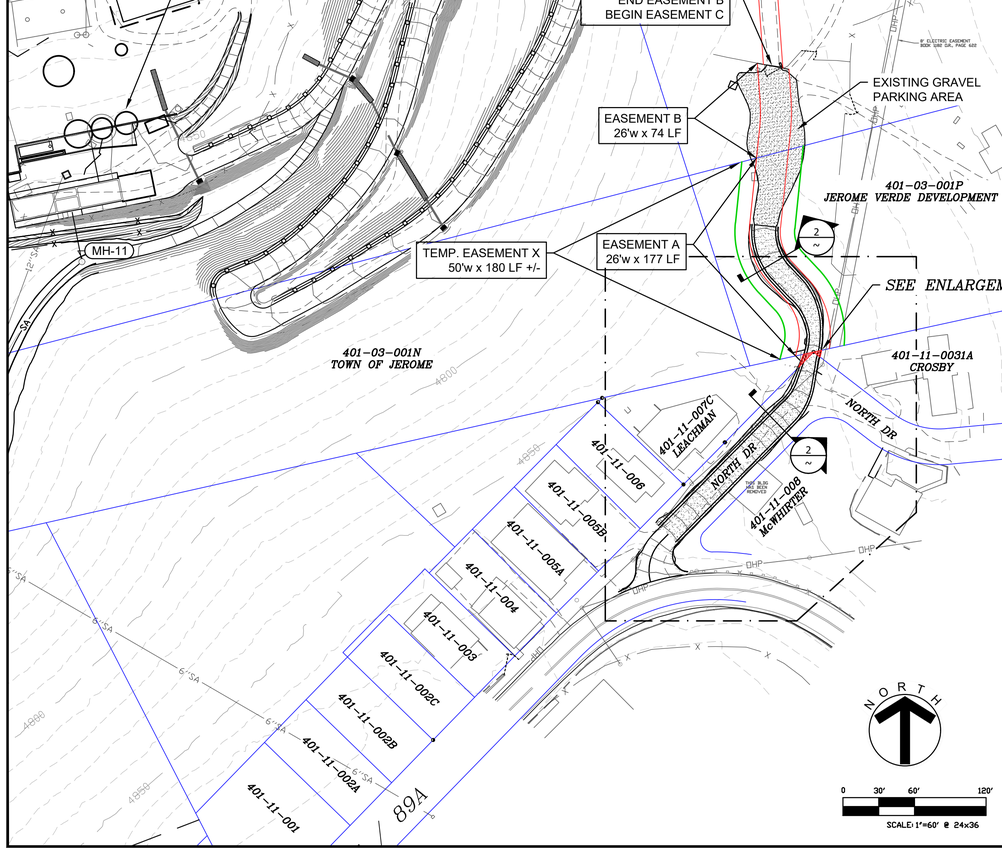

EXISTING ROAD

PROPOSED 26'
ACCESS EASEMENT

PROPOSED 50' TEMP
CONST. EASEMENT

ROAD NARROWS TO 9' LANE
AT PROPERTY CORNER

401-03-001N
TOWN OF JEROME

401-03-001P
JEROME VERDE DEVELOPMENT LLC

EXISTING
OVERHEAD
POWER LINE

EXISTING 8' WIDE
POWER LINE
EASEMENT

EASEMENT F
20 SF +/-

EASEMENT E
43 SF +/-

EXISTING
POWER
POLE

401-11-0031A
CROSBY

401-11-007C
LEACHMAN

NORTH DR

30'

40'

18'

EXISTING
OVERHEAD
POWER LINE

THIS BLDG
HAS BEEN
REMOVED

401-11-008
McWHIRTER

HAMPSHIRE/89A

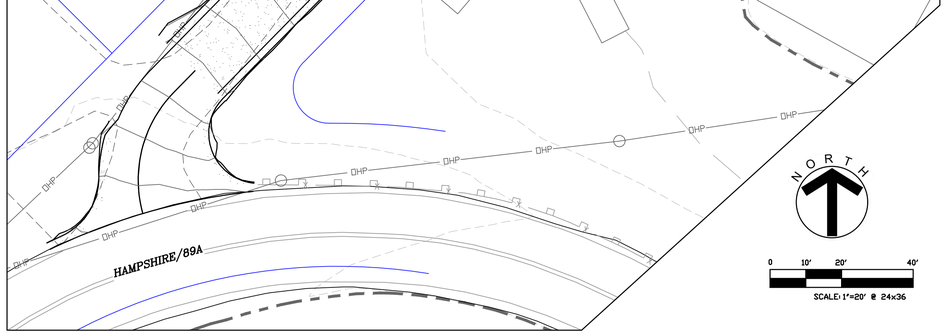

SUMMARY OF ACCESS EASEMENTS					
EASMT	LOCATION	LENGTH (FT)	WIDTH (FT)	AREA (SF)	AREA (AC)
A	401-03-001P	177	26	4,602	0.106
B	401-03-043C	74	26	1,924	0.044
C	401-03-043C	1,009	16	16,144	0.371
D	401-03-043C	235	28	6,580	0.151
E	401-11-007C	NA	NA	43	NA
F	401-11-031A	NA	NA	20	NA
X*	401-03-001P	180	50	4,320*	0.099
Y*	401-03-043C	NA	NA	5,170*	0.119

*EASEMENTS "X" & "Y" ARE TEMPORARY CONSTRUCTION EASEMENTS. AREA= TOTAL EASEMENT MINUS PERMANENT EASEMENT

NOTES

1. THE CEMETERY IS A HISTORICAL SITE. NO IMPROVEMENTS ARE ALLOWED BEYOND THE EXISTING ROADWAY. THE PROPOSED EASEMENT THROUGH THE SITE SHALL BE FOR THE USE AND MAINTENANCE OF THE EXISTING ROADWAY.
2. THE EXISTING ROAD ALONG NORTH STREET WILL BE WIDENED TO 18' FOR TRUCK ACCESS TO THE TREATMENT PLANT. SEE DETAIL 2.
4. THE EXISTING ROAD FROM NORTH STREET TO THE CEMETARY WILL BE WIDENED FOR TRUCK ACCESS TO THE TREATMENT PLANT. SEE DETAIL 2.
5. THE EXISTING ROAD FROM THE CEMETARY TO THE TREATMENT PLANT WILL BE WIDENED TO 18' FOR TRUCK ACCESS. SEE DETAIL 1.
6. 50' WIDE TEMPORARY CONSTRUCTION EASEMENTS ARE PROPOSED FOR CONSTRUCTING THE ACCESS ROADS TO THE CEMETARY AND TREATMENT PLANT.
7. TOTAL EASEMENT AREAS ARE APPROXIMATE BASED ON LINEAR FOOTAGE. FINAL AREAS WILL BE MORE PRECISE AND MAY VARY.

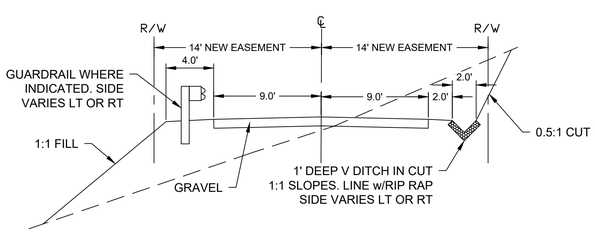

1 TYPICAL ACCESS ROAD TO TREATMENT PLANT 1"=6'

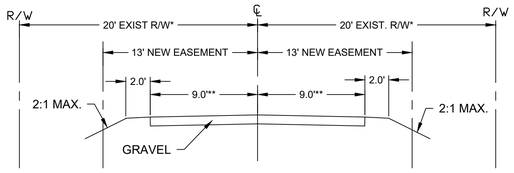

*NORTH DRIVE HAS 40' EXISTING RIGHT OF WAY.
**LANE WIDTH VARIES PER PLAN

2 TYPICAL ACCESS ROAD HWY 89A TO CEMETARY 1"=6'

THIS EXHIBIT SHOWS PROPOSED EASEMENTS FOR ACCESS TO THE TOWN OF JEROME WASTEWATER TREATMENT PLANT. EASEMENTS SHALL BE FOR ROAD CONSTRUCTION & MAINTENANCE AND FOR ACCESS TO THE TREATMENT PLANT. TO BE OBTAINED BY THE TOWN OF JEROME.

EXHIBIT. NOT FOR CONSTRUCTION. FOR AGENCY REVIEW ONLY

TOWN OF JEROME
WASTEWATER TREATMENT PLANT IMPROVEMENTS

SEC Inc.
825 COVE PARKWAY
COTTONWOOD, AZ 86326
928-282-7787

PROPOSED ACCESS EASEMENTS EXHIBIT

DATE	DRAWN	SHEET
4/11/24	NMW	1 OF 1
SCALE	CHECKED	PROJECT NO.
AS SHOWN	KG	19-1101CE

S:\LAND PROJECTS 2004 ENGINEERING\19-1101CE JEROME WWTP\DWG\C3D\EXHIBITS\ROAD EASEMENTS.DWG

©2024, SEC, Inc., All Rights Reserved. This document is protected under the United States Copyright Act. No part may be reproduced in any form or by any means or stored in a database or retrieval system, without the prior written permission of SEC, Inc. These plan documents have been prepared using technical knowledge that would be applied by other qualified registrants who practice the same profession in the same area and at the same time. Efforts have been made to be as accurate as possible. However, plan documents could contain unintentional technical inaccuracies, typographical errors or omissions. Users of these plan documents should understand that it is highly probable that errors and omissions will occur in any plan/document preparation process.

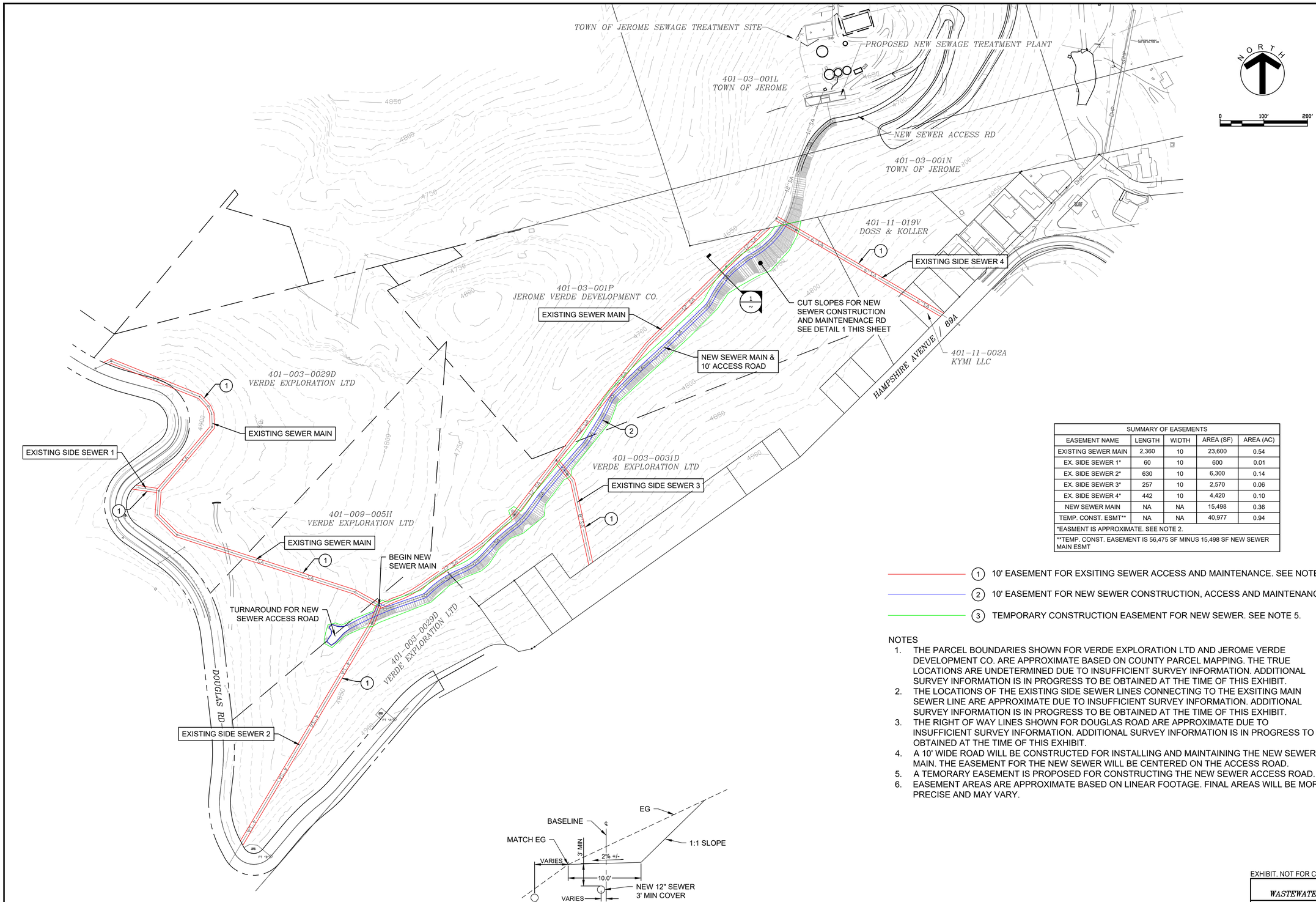

1 TYPICAL SEWER CONSTRUCTION ROAD
1"=6'

SUMMARY OF EASEMENTS				
EASEMENT NAME	LENGTH	WIDTH	AREA (SF)	AREA (AC)
EXISTING SEWER MAIN	2,360	10	23,600	0.54
EX. SIDE SEWER 1*	60	10	600	0.01
EX. SIDE SEWER 2*	630	10	6,300	0.14
EX. SIDE SEWER 3*	257	10	2,570	0.06
EX. SIDE SEWER 4*	442	10	4,420	0.10
NEW SEWER MAIN	NA	NA	15,498	0.36
TEMP. CONST. ESMT**	NA	NA	40,977	0.94
*EASMENT IS APPROXIMATE. SEE NOTE 2.				
**TEMP. CONST. EASEMENT IS 56,475 SF MINUS 15,498 SF NEW SEWER MAIN ESMT				

(1) 10' EASEMENT FOR EXSITING SEWER ACCESS AND MAINTENANCE. SEE NOTE 2.

(2) 10' EASEMENT FOR NEW SEWER CONSTRUCTION, ACCESS AND MAINTENANCE. SEE NOTE 4

(3) TEMPORARY CONSTRUCTION EASEMENT FOR NEW SEWER. SEE NOTE 5.

NOTES

1. THE PARCEL BOUNDARIES SHOWN FOR VERDE EXPLORATION LTD AND JEROME VERDE DEVELOPMENT CO. ARE APPROXIMATE BASED ON COUNTY PARCEL MAPPING. THE TRUE LOCATIONS ARE UNDETERMINED DUE TO INSUFFICIENT SURVEY INFORMATION. ADDITIONAL SURVEY INFORMATION IS IN PROGRESS TO BE OBTAINED AT THE TIME OF THIS EXHIBIT.
2. THE LOCATIONS OF THE EXISTING SIDE SEWER LINES CONNECTING TO THE EXSITING MAIN SEWER LINE ARE APPROXIMATE DUE TO INSUFFICIENT SURVEY INFORMATION. ADDITIONAL SURVEY INFORMATION IS IN PROGRESS TO BE OBTAINED AT THE TIME OF THIS EXHIBIT.
3. THE RIGHT OF WAY LINES SHOWN FOR DOUGLAS ROAD ARE APPROXIMATE DUE TO INSUFFICIENT SURVEY INFORMATION. ADDITIONAL SURVEY INFORMATION IS IN PROGRESS TO BE OBTAINED AT THE TIME OF THIS EXHIBIT.
4. A 10' WIDE ROAD WILL BE CONSTRUCTED FOR INSTALLING AND MAINTAINING THE NEW SEWER MAIN. THE EASEMENT FOR THE NEW SEWER WILL BE CENTERED ON THE ACCESS ROAD.
5. A TEMORARY EASEMENT IS PROPOSED FOR CONSTRUCTING THE NEW SEWER ACCESS ROAD.
6. EASEMENT AREAS ARE APPROXIMATE BASED ON LINEAR FOOTAGE. FINAL AREAS WILL BE MORE PRECISE AND MAY VARY.

THIS EXHIBIT SHOWS PROPOSED EASEMENTS FOR CONSTRUCTION AND MAINTENANCE OF EXISTING AND NEW SEWER LINES TO BE OBTAINED BY THE TOWN OF JEROME.

EXHIBIT. NOT FOR CONSTRUCTION. FOR AGENCY REVIEW ONLY

TOWN OF JEROME
WASTEWATER TREATMENT PLANT IMPROVEMENTS

SEC Inc.
825 COVE PARKWAY
COTTONWOOD, AZ 86326
928-282-7787

PROPOSED SEWER EASEMENTS EXHIBIT

DATE	DRAWN	SHEET
2/28/24	NMW	1 OF 1
SCALE	CHECKED	PROJECT NO.
AS SHOWN	KG	19-1101CE

©2024, SEC, Inc., All Rights Reserved. This document is protected under the United States Copyright Act. No part may be, reproduced in any form or by any means or stored in a database or retrieval system, without the prior written permission of SEC, Inc. These plans/documents have been prepared using technical knowledge that would be applied by other qualified registrants who practice the same profession in the same area and at the same time. Efforts have been made to be as accurate as possible. However, plans/documents could contain unintentional technical inaccuracies, typographical errors or omissions. Users of these plans/documents should understand that it is highly probable that errors and omissions will occur in any plan/document preparation process.

USDA
United States Department of Agriculture

Rural Development

State Office

230 N. 1st Avenue
#206
Phoenix, AZ 85003

Voice 602-280-8701
Fax 855-699-8035
TDD 602-280-8705

April 8, 2022

Town of Jerome, Arizona
600 Clark Street (PO Box 335)
Jerome, AZ 86331

SUBJECT: Letter of Conditions
Recipient Name: Town of Jerome, Arizona

Project Name: Sewer Rehab SEARCH 2020
CFDA NUMBER – 10.760

RUS Loan (SECD):	$1,819,000.00
RUS Grant (SECD)	$4,830,000.00
SEARCH Grant:	$30,000.00 (previously funded)

Dear Ms. Gallagher:

This letter establishes conditions which must be understood and agreed to by you before further consideration may be given to your application. The loan and/or grant will be administered on behalf of the Rural Utilities Service (RUS) by the State and Area staff of USDA Rural Development (RD), both of which are referred to throughout this letter as the Agency. Any changes in project cost, source of funds, scope of project, or any other significant changes in the project or applicant must be reported to and concurred with by the Agency by written amendment to this letter. This includes any significant changes in the Applicant's financial condition, operation, organizational structure or executive leadership. Any changes made without Agency concurrence shall be cause for discontinuing processing of the application.

This letter does not constitute loan and/or grant approval, nor does it ensure that funds are or will be available for the project. The funding is being processed on the basis of a loan not to exceed $1,819,000.00 and/or a grant not to exceed $4,830,000.00. The loan and/or grant will be considered approved on the date Form RD 1940-1, "Request for Obligation of Funds" is signed by the Agency approval official.

The applicant will ensure projects are completed in a timely, efficient, and economical manner. You must meet all conditions set forth under Section III – Requirements Prior to Advertising for Bids within 1 year of this letter.

If you do not meet the conditions of this letter, the Agency reserves the right to withdraw Agency funding.

If you agree to meet the conditions set forth in this letter and desire further consideration be given to your application, please complete and return the following forms within 14 days:

Form RD 1942-46, "Letter of Intent to Meet Conditions"

USDA is an equal opportunity provider, employer and lender.

Form RD 1940-1, "Request for Obligation of Funds"

All parties may access information and regulations referenced in this letter at our website located at https://www.rd.usda.gov/programs-services/water-environmental-programs/water-waste-disposal-loan-grant-program.

The conditions are as follows:

SECTION I - PROJECT SCOPE

1. Project Description – Funds will be used to design, purchase, and install necessary equipment and components to address high ammonia and copper levels in the area along with line improvements to the aging wastewater system. This project is addressing the Arizona Department of Environmental Quality (ADEQ) consent order to meet compliance.

Facilities will be designed and constructed in accordance with sound engineering practices and must meet the requirements of Federal, State, and local agencies. The proposed facility design must be based on the Preliminary Engineering Report (PER), prepared by PACE dated/amended December 2021, as concurred with by the Agency.

2. Project Funding – The Agency is offering the following funding for your project:

RUS Loan (SECD)-	$ 1,819,000.00
RUS Grant -	$ 4,830,000.00
SEARCH Grant -	$30,000.00 (previously funded)
Other Funding -	$ -0-

TOTAL PROJECT COST - $ 6,679,000.00

Any changes in funding sources following obligation of Agency funds must be reported to the processing official. Prior to loan closing, any increase in non-Agency funding will be applied first as a reduction to Agency grant funds, up to the total amount of the grant, and then as a reduction to Agency loan funds.

The applicant must certify that they have exhausted all other funding avenues and have no pending funding considerations from any other sources. Further, the applicant must certify that they do not intend to apply anywhere else for funding for this project. If, after obligation of Agency funds, other funding becomes available, the Agency reserves the right to deobligate any and all funding for this project and to re-underwrite. This may result in the offering of a different funding package to for this project.

Prior to advertisement for construction bids, you must provide evidence of applicant contributions and other funding sources. This evidence should include a copy of the commitment letter. Agency funds will not be used to pre-finance funds committed to the project from other sources.

3. Project Budget – Funding from all sources has been budgeted for the estimated expenditures as follows:

Project Costs:	**Total Budgeted:**
Development/Construction	
Access Road	$778,553
10" Sewer Line Improv.	$925,000
Treatment Plant Site	$558,500
Concrete Tanks	$142,500
General Conditions	$806,306
Equipment	$1,435,000
Contingency	$383,893
Engineering Fees	
Includes:	
Pre-Development (PER/ER)	$30,000
Study & Report Phase	$69,020
Design Phase	$646,500
Permitting & Fees	$89,000
Bid Services	$45,000
Engineering Const. Services	$501,000
Post Construction Services	$5,000
Contingency (Non-Construction)	$67,776
Interest/Fees – Const. Loan	$167,452
Interest/Fees – Bridge Loan	$28,500
TOTAL	$6,679,000

Project feasibility and funding will be reassessed if there is a significant change in project costs after bids are received. Obligated loan and/or grant funds not needed to complete the proposed project will be deobligated. Any reduction will be applied to Agency grant funds first. If actual project costs exceed the project cost estimates, an additional contribution by the Owner may be necessary. An "Amended Letter of Conditions" will be issued for any changes to the total project budget.

4. Project Timeline – To ensure that the project proceeds in a timely manner, key processing milestones have been established in accordance with the PER or other Agency approved documentation. **Projects should be completed and Agency funds fully disbursed within three years of obligation.** By agreeing to the terms herein, you agree to comply with the milestones identified below. If, for any reason, one or more of the milestones cannot be met, you must notify the Agency in writing at least 30 days prior to the referenced date. Should your final completion date become more than three years after obligation the written request will follow the procedures outlined in Section VI of this letter, including the submission of not less than 90 days prior to the benchmark. The correspondence must contain a valid explanation as to why the milestone cannot be met and include a proposed revised project completion schedule. If the Agency agrees to the modification, a written confirmation will be issued. The Agency reserves the right to de-obligate loan and/or grant funds, or take other appropriate action, if the established or amended deadlines are not met.

Milestone	Date
Design Phase	09/07/2022
Bid Process and Permitting	12/30/2022
Start Construction Period	01/16/2023
Substantial Completion	12/29/2023
Final Completion	06/12/2024

SECTION II – RATES & TERMS

5. Interest Rates and Loan Terms – The interest rate will be the lower of the rate in effect at the time of loan approval or the time of loan closing, unless you request otherwise. Should the interest rate be reduced, the payment will be recalculated to the lower amount. The payment due date will be established as the day that the loan closes.

Your loan will be scheduled for repayment over a period of 40 years. Payments will be equal monthly amortized installments, beginning one month after closing. For planning purposes, use a 1.25% interest which provides for a monthly payment of $4,821.00. The precise payment amount will be based on the interest rate at which the loan is closed and may be different than the one above.

6. Security – The loan will be secured by a General Obligation, Revenue, or Other bond with first, or parity lien position in the amount of $1,819,000.00. The bond will be fully registered as to both principal and interest in the name of the "United States of America, Acting through the United States Department of Agriculture." Bond Counsel will be utilized in preparation of these documents.

The bond/security instruments and any ordinance or resolution relating thereto must not contain any provision in conflict with the Agency Loan Resolution, applicable regulations, or associated laws. There must be no defeasance or refinancing clause in conflict with the graduation requirements of 7 U.S.C. 1983.

If the loan will be on parity with another lender/s, the bond/security instrument must specify that, in the event of default, each lender will be affected on a proportionate basis.

Additional security requirements are contained in RUS Bulletin 1780-27, "Loan Resolution (Public Bodies) and/or RUS Bulletin 1780-12, "Water and Waste System Grant Agreement". A draft of all security instruments, including draft bond resolution, must be reviewed and concurred in by the Agency prior to advertising for bids. Bond/loan resolutions must be duly adopted and executed prior to loan closing.

The Grant Agreement will be executed prior to the first disbursement of grant funds. The grantee understands that any property acquired or improved with Federal grant funds may have use and disposition conditions which apply to the property as provided by 2 CFR part 200 in effect at this time and as may be subsequently modified. The grantee understands that any sale or transfer of property is subject to the interest of the United States Government in the market value in proportion to its participation the project.

7. Reserves – Reserves must be properly budgeted and set aside to maintain the financial viability and sustainability of any operation. Reserves are important to fund unanticipated emergency repairs, to assist with debt service should the need arise, and for the replacement of assets which have a useful life less

than the repayment period of the loan. The following reserves are required to be established as a condition of this loan:

a. **Debt Service Reserve** – Unless a General Obligation Bond secures the lien, as a part of this Agency loan proposal, you must establish a debt service reserve fund equal to at least one annual loan installment that accumulates at the rate of 10% of one annual payment per year for ten years or until the balance is equal to one annual loan payment. For planning purposes, 10% of the proposed loan installment would equal $482.10 per month; this amount should be deposited monthly until a total of $57,852 has accumulated. Prior written concurrence from the Agency must be obtained before funds may be withdrawn from this account during the life of the loan. When funds are withdrawn during the life of the loan, deposits will continue as designated above until the fully funded amount is reached.

b. **Short-Lived Asset Reserve** – You must establish a short-lived asset reserve fund. Based on the PER, you must deposit at least $3,333 into the short-lived asset reserve fund annually for the life of the loan to pay for repairs and/or replacement of major system assets. It is your responsibility to assess your facility's short-lived asset needs on a regular basis and adjust the amount deposited to meet those needs.

SECTION III –REQUIREMENTS PRIOR TO ADVERTISING FOR BIDS

8. Organization – The Bond Counsel transcripts of proceedings must show that your organization is a duly incorporated public body and has continued legal existence. Your organization must have the authority to own, construct, operate, and maintain the proposed facility, as well as for borrowing money, pledging security and raising revenues.

9. Suspension and Debarment Screening – You will be asked to provide information on the principals of your organization. Agency staff must conduct screening for suspension and debarment of the entity, as well as its principals through the Do Not Pay Portal.

a. Principal –
    i. An officer, director, owner, partner, principal investigator, or other person within a participant with management or supervisory responsibilities related to a covered transaction; or
    ii. A consultant or other person, whether or not employed by the participant or paid with federal funds, who –
        1. Is in a position to handle federal funds;
        2. Is in a position to influence or control the use of those funds; or,
        3. Occupies a technical or professional position capable of substantially influencing the development or outcome of an activity required to perform the covered transaction. (2 CFR §180.995)

10. Environmental Requirements – The project, as proposed, has been evaluated to be consistent with the National Environmental Policy Act. Other Federal, State, tribal, and local laws, regulations and/or permits may apply or be required. If the project or any project element deviates from or is modified from the originally approved project, additional environmental review may be required.

This project has applied the Nationwide Programmatic Agreement Among the U.S. Department of Agriculture Rural Development Programs, National Conference of State Historic Preservation Officers,

and the Advisory Council on Historic Preservation for Sequencing Section 106 (NPA). This agreement allows the Agency to obligate funds prior to the completion of Section 106 of the National Historic Preservation Act. The Agreement stipulates, among other things, that the Section 106 process must be complete prior to the awarding of funds and prior to construction. Rural Development is in receipt of your signed NPA Awareness Certification form. In the Awareness Certification, you have acknowledged your awareness of these and other requirements and have agreed that you must complete the Section 106 process before the environmental review component of your application can be finalized and before construction. These historic preservation requirements must be met prior to final approval and prior to taking any action that would have an adverse effect on historic properties or hinder completion of the consultation process required under Section 106 of the National Historic Preservation Act (NHPA). Do not initiate any type of ground disturbing activity, enter into construction contracts, initiate construction, rehabilitation, or purchase land or equipment prior to receiving notification from the Agency that these requirements have been met. Taking any of these actions prior to completion of the required reviews could result in loss of program funds.

11. Engineering Services – You have been required to complete an Agreement for Engineering Services, which should consist of the Engineers Joint Contract Documents Committee (EJCDC) documents as indicated in RUS Bulletin 1780-26, "Guidance for the Use of EJCDC Documents on Water and Waste Projects with RUS Financial Assistance," or other approved form of agreement. The Agency will provide concurrence prior to advertising for bids and must approve any modifications to this agreement.

12. Contract Documents, Final Plans, and Specifications- All development will be completed by contract in accordance with applicable provisions of RUS Instruction 1780, Subpart C – Planning, Designing, Bidding, Contracting, Constructing and Inspections, (copy available upon request), and in compliance with all statutory requirements. You are responsible to share this with your engineer before pre-design.

a. The plans and specifications and all proposals required by law must be approved by Arizona Department of Environmental Quality.

b. In preparing final design and providing service to the planned project area, you and your engineer will comply with all zoning and planning requirements of the appropriate governing bodies where service is to be provided.

c. The Agency will need to concur in the plans and specifications prior to advertising for bids. The Agency may require an updated cost estimate if a significant amount of time has elapsed between the original project cost estimate and advertising for bids.

d. The use of any procurement method other than competitive sealed bids must be requested in writing and approved by the Agency.

e. The contract documents must consist of the EJCDC construction contract documents as indicated in RUS Bulletin 1780-26 or other Agency-approved forms of agreement.

f. **American Iron and Steel Requirements.** Section 746 of Title VII of the Consolidated Appropriations Act of 2017 (Division A - Agriculture, Rural Development, Food and Drug Administration, and Related Agencies Appropriations Act, 2017) and subsequent statutes

mandating domestic preference applies the American Iron and Steel (AIS) requirement to obligations made after May 5, 2017:

(1) No Federal funds made available for this fiscal year for the rural water, wastewater, waste disposal, and solid waste management programs authorized by the Consolidated Farm and Rural Development Act (7 U.S.C. 1926 et seq.) shall be used for a project for the construction, alteration, maintenance, or repair of a public water or wastewater system unless all of the iron and steel products used in the project are produced in the United States.
(2) The term "iron and steel products" means the following products made primarily of iron or steel: lined or unlined pipes and fittings, manhole covers and other municipal castings, hydrants, tanks, flanges, pipe clamps and restraints, valves, structural steel, reinforced precast concrete, and construction materials.
(3) The requirement shall not apply in any case or category of cases in which the Secretary of Agriculture (in this section referred to as the "Secretary") or the designee of the Secretary finds that—
   (a) applying the requirement would be inconsistent with the public interest;
   (b) iron and steel products are not produced in the United States in sufficient and reasonably available quantities or of a satisfactory quality; or
   (c) inclusion of iron and steel products produced in the United States will increase the cost of the overall project by more than 25 percent.
(4) Owners are ultimately responsible for compliance with AIS requirements (as defined in RUS Bulletin 1780-35).
   (a) ***Sign*** loan resolutions, grant agreements and letters of intent to meet conditions which include AIS language, accepting AIS requirements in those documents and in the letter of conditions.
   (b) ***Sign*** agreements for engineering services, executed construction contracts and all other appropriate and necessary documents which include AIS language.
   Change Orders and Partial Payment Estimates: ***Acknowledge*** responsibility for compliance with AIS requirements by signing change orders (EJCDC C-941) and partial payment estimates (EJCDC C-620).
   (c) Substantial completion of project: ***Obtain*** the certification letters from the consulting engineer and ***maintain*** this documentation for the life of the loan.
   (d) *Special Cases*
   i. Where Owner provides their own engineering, the Owner's responsibilities will include items listed in Section 5 of RUS Bulletin 1780-35.
   ii. Where Owner performs their own construction, the Owner's responsibilities will include items listed in Section 6 of RUS Bulletin 1780-35.
   iii. Where Owner directly procures AIS products, Owner must ***utilize*** EJCDC Procurement Series standard contract documents following RUS Bulletin 1780-26 Exhibit D and ***obtain*** manufacturers' certifications and provide copies to Engineer and Contractor.

13. Legal Services –A legal services agreement is required with your attorney and bond counsel, if applicable, for any legal work needed in connection with this project. The agreement should stipulate an hourly rate for the work, with a "not to exceed" amount for the services, including reimbursable expenses. RUS Bulletin 1780-7, "Legal Services Agreement," or similar format may be used. The Agency will provide concurrence prior to advertising for bids. Any changes to the fees or services spelled out in the original agreement must be reflected in an amendment to the agreement and have prior Agency concurrence.

14. **Property Rights** - Prior to advertising for bids, you and your legal counsel must furnish satisfactory evidence that you have adequate continuous and valid control over the lands and rights-of-way needed for the project. Acquisitions of necessary land and rights must be accomplished in accordance with the Uniform Relocation Assistance and Real Property Acquisition Policies Act. Such control over the lands and rights will be evidenced by the following:

a. **Right-of-Way Map** – Your engineer will provide a map clearly showing the location of all lands and rights-of-way needed for the project. The map must designate public and private lands and rights and the appropriate legal ownership thereof.
b. **Form RD 442-20, "Right-of-Way Easement"** – This form, or similar format, may be used to obtain any necessary easements for the proposed project.
c. **Form RD 442-21, "Right-of-Way Certificate"** – You will provide a certification on this form that all right-of-way requirements have been obtained for the proposed project.
d. **Form RD 442-22, "Opinion of Counsel Relative to Rights-of-Way"** – Your attorney will provide a certification and legal opinion on this form addressing rights-of-way, easements, and title.
e. Preliminary Title Work (Title Opinion) – When applicable, your attorney or title company will provide a preliminary title opinion for any property related to the facility, currently owned and to be acquired, along with copies of deeds, contracts or options for purchasing said property. Form RD 1927-9, "Preliminary Title Opinion," may be used.
e. Title Work (Title Insurance when a security interest is not taken in the real estate) – When applicable, your attorney or title company will secure an Owners' Title Insurance policy on all real estate to be acquired in connection with this project. This policy should be in an amount equal to the market value of the property as improved.

The approving official may waive title defects or restrictions, such as utility easements, that do not adversely affect the suitability, successful operation, security value, or transferability of the facility. Any such waivers must be provided by the approving official in writing prior to closing or the start of construction, whichever occurs first.

You are responsible for the acquisition of all property rights necessary for the project and for determining that prices paid are reasonable and fair. The Agency may require an appraisal by an independent appraiser or Agency employee in order to validate the price to be paid.

15. **System Policies, Procedures, Contracts, and Agreements** – The facility must be operated on a sound business plan which involves adopting policies, procedures, and/or ordinances outlining the conditions of service and use of the proposed system. Mandatory connection policies should be used where enforceable. The policies, procedures, and/or ordinances must contain an effective collection policy for accounts not paid in full within a specified number of days after the date of billing. They should include appropriate late fees, specified timeframes for disconnection of service, and reconnection fees. A draft of these policies, procedures, and/or ordinances must be submitted for Agency review and concurrence, along with the documents below, before closing instructions may be issued unless otherwise stated.

a. Conflict of Interest Policy – Prior to obligation of funds, you must certify in writing that your organization has in place up-to-date written standards of conduct covering conflict of interest. The standards of conduct must include disciplinary actions in the event of a violation by officers,

employees, or agents of the borrower. The standards identified herein apply to any parent, affiliate or subsidiary organization of the borrower that is not a state or local government, or Indian Tribe. Policies and accompanying documents shall be furnished to Rural Development upon request.

You must also submit a disclosure of planned or potential transactions related to the use of Federal funds that may constitute or present the appearance of personal or organizational conflict of interest. Disclosure must be in the form of a written letter signed and dated by the applicant's official. A negative disclosure in the same format is required if no conflicts are anticipated.

Sample conflict of interest policies may be found at the National Council of Nonprofits website, https://www.councilofnonprofits.org/tools-resources/conflict-of-interest, or in Internal Revenue Service Form 1023, Appendix A, "Sample Conflict of Interest Policy," at http://www.irs.gov/pub/irs-pdf/i1023.pdf. Though these examples reference non-profit corporations, the requirement applies to all types of Agency borrowers.

Assistance in developing a conflict of interest policy is available through Agency-contracted technical assistance providers if desired.

b. **Sewer User Agreement** – Projects not involving mandatory connection require users to execute a Water/Sewer Users Agreement. The draft agreement must receive Agency concurrence prior to advertising for bids. RUS Bulletin 1780-9, "Water Users Agreement," or similar format may be used.

c. **Contracts for Other Services/Lease Agreement** – Drafts of any contracts or other forms of agreements for other services, including audit, management, operation, and maintenance, or lease agreements covering real property essential to the successful operation of the facility, must be submitted to the Agency for review and concurrence prior to advertising for bids.

d. **Parity/Intercreditor Agreement** – Projects with parity liens must have in place a written agreement between the parity lenders. The draft agreement must receive Agency concurrence prior to advertising for bids.

Fully executed copies of any policies, procedures, ordinances, contracts, or agreements above must be submitted prior to loan closing, with the exception of the conflict of interest policy, which must be in place prior to obligation of funds.

16. Closing Instructions – The Agency will prepare closing instructions as soon as the requirements of the previous paragraphs are complete, as well as a draft of the security instrument(s). Both your bond and legal counsel must comply with these instructions when closing the Agency loan/grant. will change over each successive year and user rates will need to be adjusted on a regular basis.

17. System Users – This letter of conditions is based upon your indication at application that there will be at least 173 residential users, 73 non-residential users, and no bulk / wholesale users on the existing and/or proposed system when construction is completed.

Before the Agency can agree to the project being advertised for construction bids, you must certify that the number of users indicated at application are currently using the system or signed up to use the system once it is operational.

If the actual number of existing and/or proposed users that have signed up for service is less than the number indicated at the time of application, you must provide the Agency with a written plan on how you will obtain the necessary revenue to adequately cash flow the expected operation, maintenance, debt service, and reserve requirements of the proposed project (e.g., increase user rates, sign up an adequate number of other users, reduce project scope, etc.). Similar action is required if there is cause to modify the anticipated flows or volumes presented following approval.

If you are relying on mandatory connection requirements, you must provide evidence of the authorizing ordinance or statute along with your user certification.

If project does not involve mandatory connections, you must provide the following:

a. **Positive Program to Encourage Connections** – You must provide a positive program to encourage connection by all users as soon as service is available. The program will be reviewed by the Agency prior to advertising for bids. A guide for developing your positive program is available from the Agency.
b. **Sewer User Agreements** – Users will be required to execute a Sewer Users Agreement prior to advertising for construction bids. The amount of cash contributions required will be set by you and concurred with by the Agency. Contributions should be an amount high enough to indicate sincere interest on the part of the potential user, but not so high as to preclude service to low-income families, and must have a deadline for the contribution to be used or forfeited. RUS Bulletin 1780-9, "Water Users Agreement," or similar agreement may be used.
c. **Service Declination Statement** – Each potential user who is located along planned lines and declines the offered service will be provided an opportunity to sign a "Service Declination Statement."

18. <u>Construction Account</u> – A separate construction account, subject to Agency audit, will be established for deposit of all project funds. These funds must be deposited in a bank with Federal Deposit Insurance Corporation (FDIC) insurance coverage. **If the balance in the account containing these funds exceeds the FDIC insurance coverage, the excess amount must be collaterally secured.** A separate account will not be required for Federal funds and other funds; however, the recipient must be able to separately identify, report and account for all Federal funds, including the receipt, obligation and expenditure of funds. Financial institutions or depositaries accepting deposits of public funds and providing other financial agency services to the Federal Government are required to pledge adequate, acceptable securities as collateral, in accordance with 202.6, 31 CFR Part 202. All funds in the account will be secured by a collateral pledge equaling at least 100 percent of the highest amount of funds expected to be deposited in the construction account at any one time.

19. <u>Interim Financing</u> – The Agency's policy is to utilize interim financing for all loans exceeding $500,000. Prepayment penalties on interim financing are not allowed. Borrowers are required to seek interim financing initially from private or cooperative lenders if funds can be borrowed at reasonable interest rates on an interim basis from those sources for the construction period. The fact that a commercial lender's rates are higher than current Agency interest rates does not necessarily mean that the commercial rate is not reasonable.

20. <u>Proposed Operating Budget</u> – You must establish and/or maintain a rate schedule that provides adequate income to meet the minimum requirements for operation and maintenance (O and M), debt service, and reserves. Prior to advertising for bids, you must submit a proposed annual operating budget to the Agency, as well as your proposed rate schedule. The operating budget should be based on a typical

year cash flow after completion of the construction phase and should be signed by the appropriate official of your organization. Form RD 442-7, "Operating Budget," or similar format may be utilized for this purpose. It is expected that O and M expenses will change over each successive year and user rates will need to be adjusted on a regular basis.

Technical assistance is available at no cost to help you evaluate and complete a rate analysis on your system. This assistance is available free to your organization. If you are interested, please contact our office for information.

21. Permits –The owner or responsible party will be required to obtain all applicable permits for the project, prior to advertising for bids. The consulting engineer must submit written evidence that all applicable permits required prior to construction have been obtained with submission to the Agency of the final plans, specifications, and bid documents.

22. Risk and Resilience Assessment/Emergency Response Plan (RRA/ERP) – The Agency requires all financed water and wastewater systems to have a RRA/ERP in place. New water or wastewater systems must provide a certification that an ERP is complete prior to the start of operation, and a certification that an RRA is complete must be submitted within one year of the start of operation. Borrowers with existing systems must provide a certification that an RRA/ERP has been completed prior to advertising for bids. Technical assistance is available in preparing these documents at no cost to you.

The RRA/ERP documents themselves are not submitted to the Agency. The RRA/ERP must address potential impacts from natural disasters and other emergency events. It should include plans to address impacts of flash flooding in areas where severe drought or wildfires occur. The documents should be reviewed and updated every five years at a minimum.

23. Bid Authorization - Once all the conditions outlined in Section III of this letter have been met, the Agency will authorize you to advertise the project for construction bids. Such advertisement must be in accordance with applicable State statutes.

SECTION IV - REQUIREMENTS PRIOR TO START OF CONSTRUCTION

24. Disbursement of Agency Funds - Agency funds will be disbursed electronically into the construction account as they are needed. SF 3881, "ACH Vendor/Miscellaneous Payment Enrollment Form," must be completed and submitted to the Agency prior to commencement of construction.

The order of disbursement is as follows: 1) Applicant contribution, 2) other funding sources, 3) interim financing or Agency loan funds, and 4) Agency grant funds. Interim financing or Agency loan funds will be expended after all other funding sources unless a written agreement is reached with all other funding sources on how funds are to be disbursed prior the first disbursement. Interim financing funds or Agency loan funds must be used prior to the use of Agency grant funds. Agency Grant funds must not be disbursed prior to loan funds except as authorized in 7 CFR 1780.45(d).

Grant funds are to be deposited in an interest-bearing account (exception provided below) in accordance with 2 CFR Part 200 and interest in excess of $500 per year remitted to the Agency. The funds should be disbursed by the recipient immediately upon receipt, and there should be little interest accrual on the Federal funds. Recipients shall maintain advances of Federal funds in interest-bearing accounts, unless:

- The recipient receives less than $120,000 in Federal awards per year.
- The best reasonably available interest-bearing account would not be expected to earn interest in excess of $500 per year on Federal cash balances.
- The depository would require an average or minimum balance so high that it would not be feasible within the expected Federal and non-Federal cash resources.
- A foreign government or banking system prohibits or precludes interest-bearing accounts.

25. Bid Tabulation – Immediately after bid opening, you must provide the Agency with the bid tabulation and your engineer's evaluation of bids and recommendations for contract awards. If the Agency agrees that the construction bids received are acceptable, adequate funds are available to cover the total project costs, and all the requirements of Section III of this letter have been satisfied, the Agency will authorize you to issue the Notice of Award.

a. **Cost Overruns –** If bids are higher than expected, or if unexpected construction problems are encountered, you must utilize all options to reduce cost overruns. Negotiations, redesign, use of bidding alternatives, rebidding or other means will be considered prior to commitment of subsequent funding by the Agency. Any requests for subsequent funding to cover cost overruns will be contingent on the availability of funds. Cost overruns exceeding 20 percent of the development cost at time of loan or grant approval or where the scope of the original purpose has changed will compete for funds with all other applications on hand as of that date.
b. **Excess Funds** - If bids are lower than anticipated at time of obligation, excess funds must be deobligated prior to start of construction except in the cases addressed in this paragraph. In cases where the original PER for the project included items that were not bid, or were bid as an alternate, the State Office official may modify the project to fully utilize obligated funds for those items. Amendments to the PER, ER, and Letter of Conditions may be needed for any work not included in the original project scope. In all cases, prior to start of construction, excess funds will be deobligated, with grant funds being deobligated first. Excess funds do not include contingency funds as described in this letter.

26. Suspension and Debarment Screening – In accordance with 2 CFR Part 180, Subpart C, as a condition of the transaction and the responsibilities to persons at the next lower tier with whom you enter into transactions, you must conduct screening for suspension and debarment of lower tier recipients (e.g., vendors, contractors, etc.).

27. Contract Review – Your attorney will certify that the executed contract documents, including performance and payment bonds, if required, are adequate and that the persons executing these documents have been properly authorized to do so in accordance with 7 CFR 1780.61(b).

Once your attorney has certified that they are acceptable, the contract documents will be submitted to the Agency for concurrence. Construction cannot commence until the Agency has concurred in the construction contracts.

28. Final Rights of Way – Your attorney or title company must furnish a separate final title opinion or Title Insurance Policy on all real property related to the facility, now owned and to be acquired for this project, as of the day of loan closing or start of construction, whichever occurs first. Form RD 1927-10, "Final Title Opinion" may be used.

If any of the right-of-way forms listed previously in this letter contain exceptions that do not adversely affect the suitability, successful operation, security value, or transferability of the facility, the approving official must provide a written waiver prior to the issuance of the Notice to Proceed.

29. Insurance and Bonding Requirements - Prior to the start of construction or loan closing, whichever occurs first, you must acquire and submit to the Agency proof of the types of insurance and bond coverage for the borrower shown below. The use of deductibles may be allowed, providing you have the financial resources to cover potential claims requiring payment of the deductible. The Agency strongly recommends that you have your engineer, attorney, and insurance provider(s) review proposed types and amounts of coverage, including any exclusions and deductible provisions. It is your responsibility and not that of the Agency to assure that adequate insurance and fidelity bond coverage is maintained.

a. **General Liability Insurance** – Include vehicular coverage.
b. **Workers' Compensation** – In accordance with appropriate State laws.
c. **Guaranty or Fidelity Insurance**–Coverage for all persons who have access to funds, including persons working under a contract or management agreement. Coverage may be provided either for all individual positions or persons, or through "blanket" coverage providing protection for all appropriate employees. Each position is to be insured in an amount equal to the maximum amount of funds expected to be under the control of that position at any one time. The minimum coverage allowed will be an amount equal to the total annual debt service payment on the Agency loans. The coverage may be increased during construction based on the anticipated monthly advances.
d. **National Flood Insurance** - If the project involves acquisition or construction in a designated special flood area, the community in which the acquisition or construction is situated must be currently participating in the national flood insurance program. Additionally, if the project involves acquisition or constriction in designated special flood or mudslide prone areas, a flood insurance policy must be in place at the time of loan closing.
e. **Real Property Insurance** – Fire and extended coverage will normally be maintained on all structures except reservoirs, pipelines and other structures if such structures are not normally insured, and subsurface lift stations except for the value of electrical and pumping equipment. The Agency will be listed as mortgagee on the policy when the Agency has a lien on the property. Prior to the acceptance of the facility from the contractor(s), you must obtain real property insurance (fire and extended coverage) on all facilities identified above.

The Agency is to be listed as "Other Insured" so as to receive notifications on all insurance, regardless of security. Insurance types described above are required to be continued throughout the life of the loan. See Section VII.

30. Initial Civil Rights Compliance Review – The Agency will conduct an initial civil rights compliance review of the borrower prior to loan closing or start of construction, whichever occurs first, in accordance with 7 CFR 1901, Subpart E. You are expected to comply with the completion of the review, including the furnishing of any documents, records, or other applicable material.

SECTION V – REQUIREMENTS PRIOR TO CLOSING

31. Interim Financing. Interim financing is being used. Generally, loan closing will occur near the end of construction when interim funds are fully disbursed. Documents detailed above from Sections II and III regarding security, electronic payments (Form 3550-28), and system policies, procedures, contracts, and agreements must be adopted and/or executed and submitted to the Agency prior to loan closing.

32. Electronic Payments – Payments will be made through an electronic preauthorized debit system. You will be required to complete Form RD 3550-28, "Authorization Agreement for Preauthorized Payments," for all new and existing indebtedness to the Agency prior to loan closing.

33. Other Requirements – All requirements contained in the Agency's closing instructions, as well as any requirements of your bond counsel and/or attorney, must be met prior to loan closing.

a. **System for Award Management**. You will be required to maintain a Dun and Bradstreet Data Universal Numbering System (DUNS) number and maintain an active registration in the System for Award Management (SAM) database. Renewal can be completed online at: http://sam.gov. This registration must be renewed and revalidated every 12 months for as long as there is an active loan, grant, or guaranteed loan with the Agency.

   To ensure the information is current, accurate and complete, and to prevent the SAM account expiration, the review and updates must be performed within 365 days of the activation date, commonly referred to as the expiration date. The registration process may take up to 10 business days. (See 2 CFR Part 25 and the "Help" section at http://sam.gov).

b. **Litigation.** You are required to notify the Agency within 30 days of receiving notification of being involved in any type of litigation prior to loan closing or start of construction, whichever occurs first. Additional documentation regarding the situation and litigation may be requested by the Agency.

c. **Certified Operator**. Evidence must be provided that your system has or will have a certified operator, as defined by applicable State or Federal requirements, available prior to the system becoming operational, or that a suitable supervisory agreement with a certified operator is in effect.

SECTION VI – REQUIREMENTS DURING CONSTRUCTION AND POST CONSTRUCTION

34. Construction Completion Timeframe – Following the benchmarks established in Section I, Item 4, Project Timeline, all projects should be completed and Agency funds fully disbursed within three years of the date of obligation. If funds are not disbursed within three years of obligation and you have not already done so per Section I, Item 4, you must submit a written request for extension of time to the Agency with adequate justification of the circumstances, including any beyond your control. The request must be submitted at least 90 days prior to the end of the three-year timeframe and include a revised estimated date of completion. The Agency will typically only allow one extension. Subsequent requests for waivers beyond the initial extension or requests that exceed five years from the initial date of obligation will be submitted to the RUS, Water and Environmental Programs for consideration. The Agency retains the right to de-obligate any loan and/or grant monies, or take other appropriate action, related to unliquidated funds that exceed the timeframes above and are not under an active extension.

35. Resident Inspector(s) – Full-time inspection is required unless you request an exception. Such requests must be made in writing and the Agency must provide written concurrence. Inspection services are to be provided by the consulting engineer unless other arrangements are requested in writing and concurred with by the Agency. A resume of qualifications of any resident inspector(s) will be submitted

to the owner and Agency for review and concurrence prior to the pre-construction conference. The resident inspector(s) must attend the preconstruction conference.

36. Preconstruction Conference – A preconstruction conference will be held prior to the issuance of the Notice to Proceed. The consulting engineer will review the planned development with the Agency, owner, resident inspector, attorney, contractor, other funders, and other interested parties, and will provide minutes of this meeting to the owner and Agency.

37. Inspections - The Agency requires a preconstruction conference, pre-final, final, and warranty inspections. Your engineer will schedule a warranty inspection with the contractor and the Agency before the end of the [one-year] warranty period to address and/or resolve any outstanding warranty issues. The Agency will conduct an inspection with you of your records management system at the same time and will continue to inspect the facility and your records system every three years for the life of the loan. See Section VII of this letter.

38. Change Orders – A Change Order must be submitted for all modifications to the approved scope of work, including existing contracts. This includes non-physical modifications such as any time extension requests. Prior written Agency concurrence is required for all Change Orders.

39. Payments – Prior Agency concurrence is required for all invoices and requests for payment before Agency funds will be released. Requests for payment related to a contract or service agreement will be signed by the owner, project engineer, and contractor or service provider prior to Agency concurrence. Invoices not related to a construction contract or service agreement will include the owner's written concurrence.

40. Use of Remaining Funds – As stated above, applicant contribution and connection or tap fees will be the first funds expended in the project. Funds remaining after all costs incident to the basic project have been paid or provided will be handled as follows:

a. Funds remaining after the applicant contribution and connection fees may be considered in direct proportion to the amounts of funding obtained from each source. The use of Agency funding will be limited to eligible loan and grant purposes, provided the use will not result in major changes to the original scope of work and the purpose of the loan and grant remains the same.
b. Any reductions in the Agency funding will be first applied to the grant funds.
c. Grant funds not expended for authorized purposes will be cancelled (de-obligated) within 90 days of final completion of project. Prior to actual cancellation, you, your attorney and engineer will be notified of the Agency's intent to cancel the remaining funds and given appropriate appeal rights.
d. Under no circumstances is it appropriate to use remaining funds as contributions to a new project outside the scope of the funded project.
e. Loan funds that are not needed will be cancelled (de-obligated) prior to loan closing.

41. Technical, Managerial and Financial Capacity - It is required that members of the Board of Directors, City Council members, trustees, commissioners and other governing members possess the necessary technical, managerial, and financial capacity skills to consistently comply with pertinent Federal and State laws and requirements. It is recommended members receive training within one year of appointment or election to the governing board, and a refresher training for all governing members on a routine basis. The content and amount of training should be tailored to the needs of the individual and the

utility system. Technical assistance providers are available to provide this training for your organization, often at no cost. Contact the Agency for additional information.

42. Reporting Requirements Related to Expenditure of Funds -- An annual audit under 2 CFR 200 is required if you expend $750,000 or more in Federal financial assistance per fiscal year. The total Federal funds expended from all sources shall be used to determine Federal financial assistance expended. Expenditures of interim financing are considered Federal expenditures.

All audits are to be performed in accordance with 2 CFR Part 200, as adopted by USDA through 2 CFR Part 400. Further guidance on preparing an acceptable audit can be obtained from the Agency. The audit must be prepared by an independent licensed Certified Public Accountant, or a State or Federal auditor if allowed by State law and must be submitted within 9 months of your fiscal year end. Both the audit and accompanying management report must be submitted for review.

If an audit is required, you must enter into a written agreement with the auditor and submit a copy of that agreement to the Agency prior to the advertisement of construction bids. The audit agreement may include terms and conditions that the borrower and auditor deem appropriate; however, the agreement should include the type of audit to be completed, the time frame in which the audit will be completed, and how irregularities will be reported.

SECTION VII – SERVICING REQUIREMENTS DURING THE TERM OF THE LOAN

43. Prepayment and Extra Payments - Prepayments of scheduled installments, or any portion thereof, may be made at any time at the option of borrower, with no penalty.

Security instruments, including bonding documents, must contain the following language regarding extra payments, unless prohibited by State statute:

> *Prepayments of scheduled installments, or any portion thereof, may be made at any time at the option of borrower. Refunds, extra payments and loan proceeds obtained from outside sources for the purpose of paying down the Agency debt, shall, after payment of interest, be applied to the installments last to become due under this note and shall not affect the obligation of borrower to pay the remaining installments as scheduled in your security instruments.*

44. Annual Financial Reporting/Audit Requirements – You are required to submit an annual financial report at the end of each fiscal year. The annual report will be certified by the appropriate organization official, and will consist of financial information, a current rate schedule, and listing of board members with their terms. Financial statements must be prepared on an accrual basis of accounting in accordance with generally accepted accounting principles (GAAP). The annual report will include separate reporting for each water and waste disposal facility, and itemized cash accounts by type (debt service, short-lived assets, etc.) under each facility. All records, books and supporting material are to be retained for three years after the issuance of the annual report. Technical assistance is available, at no cost, with preparing financial reports.

The type of financial information that must be submitted is specified below:

a. **Audits** – An audit under the Single Audit Act is required if you expend $750,000 or more in Federal financial assistance per fiscal year. The total Federal funds expended from all sources

shall be used to determine Federal financial assistance expended. Expenditures of interim financing are considered Federal expenditures.

See Section VI for additional information regarding audits.

b. **Financial Statements** – If you expend less than $750,000 in Federal financial assistance per fiscal year, you may submit financial statements in lieu of an audit which include, at a minimum, a balance sheet and an income and expense statement. You may use Form RD 442-2, "Statement of Budget, Income and Equity," and 442-3, "Balance Sheet," or similar format to provide the financial information. The financial statements must be signed by the appropriate borrower official and submitted within 60 days of your fiscal year end.

c. **(if applicable) Quarterly Reports** – Quarterly Income and Expense Statements will be required until the processing office waives this requirement. You may use Form RD 442-2, "Statement of Budget, Income and Equity," or similar format to provide this information. The reports are to be signed by the appropriate borrower official and submitted within 30 days of each quarter's end. The Agency will notify you in writing when quarterly reports are no longer required.

45. Annual Budget and Projected Cash Flow - Thirty days prior to the beginning of each fiscal year, you will be required to submit an annual budget and projected cash flow to this office. The budget must be signed by the appropriate borrower official. Form RD 442-2, "Statement of Budget, Income and Equity," or similar format may be used.

Technical assistance is available at no cost to help you evaluate and complete a rate analysis on your system, as well as completing the annual budget.

46. Graduation - By accepting this loan, you are also agreeing to refinance (graduate) the unpaid loan balance in whole, or in part, upon request of the Government. If at any time the Agency determines you can obtain a loan for such purposes from responsible cooperative or private sources at reasonable rates and terms, you will be requested to refinance. Your ability to refinance will be assessed every other year for those loans that are five years old or older.

47. Security/Operational Inspections – The Agency will inspect the facility and conduct a review of your operations and records management system and conflict of interest policy every three years for the life of the loan. You must participate in these inspections and provide the required information.

48. System for Award Management. You will be required to maintain a Dun and Bradstreet Data Universal Numbering System (DUNS) number and maintain an active registration in the System for Award Management (SAM) database. Further information can be found at paragraph 34 of this letter.

49. Risk and Resiliency Assessment/Emergency Response Plan (RRA/ERP) – The RRA/ERP is further outlined under Section III of this letter. You will be required to submit a certification to the servicing office every five years that the RRA/ERP is current and covers all sites related to the facility. The RRA/ERP documents themselves are not submitted to the Agency. The RRA/ERP must address potential impacts from natural disasters and other emergency events. It should include plans to address impacts of flash flooding in areas where severe drought or wildfires occur. Technical assistance is available in preparing these documents at no cost to you.

50. Insurance. – Insurance requirements are further outlined in Section IV of this letter. You will be required to maintain insurance on the facility and employees as previously described in this letter for the life of the loan.

51. Statutory and National Policy Requirements – As a recipient of Federal funding, you are required to comply with U.S. statutory and public policy requirements, including but not limited to:

a. **Section 504 of the Rehabilitation Act of 1973** – Under Section 504 of the Rehabilitation Act of 1973, as amended (29 U.S.C. 794), no handicapped individual in the United States shall, solely by reason of their handicap, be excluded from participation in, be denied the benefits of, or be subjected to discrimination under any program or activity receiving Agency financial assistance.

b. **Civil Rights Act of 1964** – All borrowers are subject to, and facilities must be operated in accordance with, Title VI of the Civil Rights Act of 1964 (42 U.S.C. 2000d et seq.) and 7 CFR 1901, Subpart E, particularly as it relates to conducting and reporting of compliance reviews. Instruments of conveyance for loans and/or grants subject to the Act must contain the covenant required by Paragraph 1901.202(e) of this Title.

c. **The Americans with Disabilities Act (ADA) of 1990** – This Act (42 U.S.C. 12101 et seq.) prohibits discrimination on the basis of disability in employment, State and local government services, public transportation, public accommodations, facilities, and telecommunications.

d. **Age Discrimination Act of 1975** – This Act (42 U.S.C. 6101 et seq.) provides that no person in the United States shall on the basis of age, be excluded from participation in, be denied the benefits of, or be subjected to discrimination under any program or activity receiving Federal financial assistance.

e. **Limited English Proficiency (LEP) under Executive Order 13166** - LEP statutes and authorities prohibit exclusion from participation in, denial of benefits of, and discrimination under Federally-assisted and/or conducted programs on the ground of race, color, or national origin. Title VI of the Civil Rights Act of 1964 covers program access for LEP persons. LEP persons are individuals who do not speak English as their primary language and who have a limited ability to read, speak, write, or understand English. These individuals may be entitled to language assistance, free of charge. You must take reasonable steps to ensure that LEP persons receive the language assistance necessary to have meaningful access to USDA programs, services, and information your organization provides. These protections are pursuant to Executive Order 13166 entitled, "Improving Access to Services by Persons with Limited English Proficiency" and further affirmed in the USDA Departmental Regulation 4330-005, "Prohibition Against National Origin Discrimination Affecting Persons with Limited English Proficiency in Programs and Activities Conducted by USDA."

f. **Controlled Substances Act** - Even though state law may allow some activities, as a recipient of Federal funding, you are subject to the Controlled Substances Act. Specific questions about the Controlled Substances Act should be directed to the Servicing Official who will contact the Office of General Counsel, as appropriate.

52. <u>Compliance Reviews and Data Collection</u> – Agency financial programs must be extended without regard to race, color, religion, sex, national origin, marital status, age, or physical or mental handicap. You must display posters (provided by the Agency) informing users of these requirements, and the Agency will monitor your compliance with these requirements during regular compliance reviews.

The Agency will conduct regular compliance reviews of the borrower and its operation in accordance with 7 CFR Part 1901, Subpart E, and 36 CFR 1191, Americans with Disabilities Act (ADA) Accessibility Guidelines for Buildings and Facilities; Architectural Barriers Act (ABA) Accessibility Guidelines. Compliance reviews will typically be conducted in conjunction with the security inspections described in this letter.

If beneficiaries (users) are required to complete an application or screening for the use of the facility or service that you provide, you must request and collect data by race (American Indian or Alaska Native, Asian, Black or African American, White); ethnicity (Hispanic or Latino, Not Hispanic or Latino); and by sex. The Agency will utilize this data as part of the required compliance review.

<u>SECTION VIII – REMEDIES FOR NON-COMPLIANCE</u>

Non-compliance with the conditions in this letter or requirements of your security documents will be addressed under the provisions of Agency regulations, statutes, and other applicable policies.

We look forward to working with you to complete this project. If you have any questions, please contact Michael Dean at 928-910-4471 or by e-mail at Michael.dean2@usda.gov.

Sincerely,

JEFFREY A. HAYS
Community Programs Director

Attachments

cc: Community Programs Director
Accountant
Attorney
Bond Counsel
Engineer

FORMS and BULLETINS:

Form AD-3031 “Assurance Regarding Felony Convictions or Tax Delinquent Status for Corporate Applicants” – Item 30
Internal Revenue Service Form 1023, Appendix A, “Sample Conflict of Interest Policy” - Item 15
Form RD 440-22, “Promissory Note” – Item 6
Form RD 442-2, “Statement of Budget, Income and Equity” – Items 45 and 46
Form RD 442-3, “Balance Sheet” – Item 45
Form RD 442-7, “Operating Budget” – Item 20
Form RD 442-20, “Right-of-Way Easement” – Item 14
Form RD 442-21, “Right-of-Way Certificate” – Item 14
Form RD 442-22, “Opinion of Counsel Relative to Rights-of-Way” – Item 14
Form RD 1927-9, “Preliminary Title Opinion” – Item 14
Form RD 1927-10, “Final Title Opinion” – Item 28
Form RD 1940-1, “Request for Obligation of Funds” – Pages 1 and 2
Form RD 1942-8, “Resolution of Members or Stockholders” – Item 6
Form RD 1942-46, “Letter of Intent to Meet Conditions” – Page 2
Form RD 3550-28, “Authorization Agreement for Preauthorized Payments” – Items 32 and 33
Form UCC-1, “Financing Statement” – Item 6
Form UCC-1Ad, “UCC Financing Statement Addendum” – Item 6
SF 3881, “ACH Vendor/Miscellaneous Payment Enrollment Form” – Item 24
RUS Bulletin 1780-7, “Legal Services Agreement” – Item 13
RUS Bulletin 1780-9, “Water Users Agreement” - Items 15 and 17
RUS Bulletin 1780-12, “Water and Waste System Grant Agreement” – Item 6
RUS Bulletin 1780-26, “Guidance for the Use of EJCDC Documents on Water and Waste Projects with RUS Financial Assistance” – Items 11 and 12
RUS Bulletin 1780-27, “Loan Resolution (Public Bodies)” – Item 6
RUS Bulletin 1780-28, “Loan Resolution Security Agreement” – Item 6

Appendix A

A. Reporting Total Compensation of Recipient Executives

In the rare instance in which all of the following apply, please contact your POB Specialist for language to include in the LOC:

1. The total Federal funding authorized to date under this award is $30,000 or more;

2. In the preceding fiscal year, the applicant received—

   (A) 80 percent or more of their annual gross revenues from Federal procurement contracts (and subcontracts) and Federal financial assistance subject to the Transparency Act, as defined at 2 CFR 170.320 (and subawards); and

   (B) $25,000,000 or more in annual gross revenues from Federal procurement contracts (and subcontracts) and Federal financial assistance subject to the Transparency Act, as defined at 2 CFR 170.320 (and subawards); and

3. The public does not have access to information about the compensation of the executives through periodic reports filed under section 13(a) or 15(d) of the Securities Exchange Act of 1934 (15 U.S.C. 78m(a), 78o(d)) or section 6104 of the Internal Revenue Code of 1986. (To determine if the public has access to the compensation information, see the U.S. Security and Exchange Commission total compensation filings at http://www.sec.gov/answers/execomp.htm.)

B. Subaward and Subrecipients

In the rare instance in which there is a subrecipient in the project, please contact your POB Specialist for language to include in the LOC:

Subrecipient means an entity that:

i. Receives a subaward from the recipient under this award; and

ii. Is accountable to the recipient for the use of the Federal funds provided by the subaward.

a. Subaward means an award provided by a pass-through entity to a subrecipient for the subrecipient to carry out part of a Federal award received by the pass-through entity. It does not include payments to a contractor or payments to an individual that is a beneficiary of a Federal program.

EXHIBIT

±2.50 ACRES

LOCATED IN SECTION 23, T.16N., R.2E.,
GILA & SALT RIVER MERIDIAN,
YAVAPAI COUNTY, ARIZONA

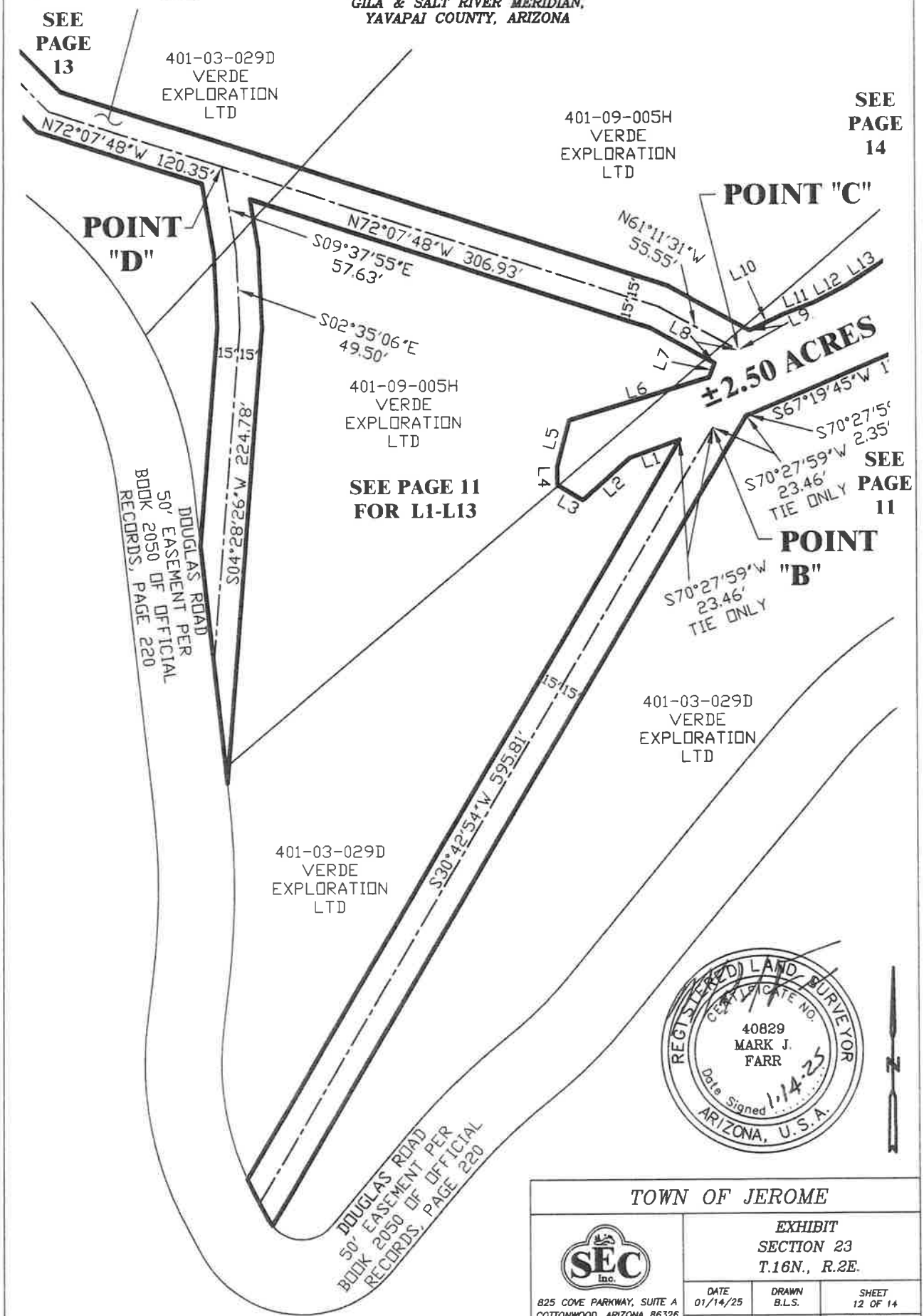

TOWN OF JEROME		
SEC Inc. 825 COVE PARKWAY, SUITE A COTTONWOOD, ARIZONA 86326 (928) 634-5889 www.sec-landmgt.com	EXHIBIT SECTION 23 T.16N., R.2E.	
	DATE 01/14/25	DRAWN B.L.S.
	SHEET 12 OF 14	
	SCALE NONE	CHECKED M.J.F.
	19-1101CE Town Jerome "Exhibit.dwg"	

Jerome Wastewater Treatment Plant Improvements

ADDENDUM #4

Date: May 27, 2026

Quest CDN #9117808

This addendum is to formally issue responses to bidder questions and minor modifications.
Reminder: Acknowledge receipt of this addendum on the Bid Form.

The bid date is being extended to **Wednesday, June 3rd at 2:30pm.**

Attachments:

1. None.

Clarifications

Re: Generator

1. The AIC rating for the automatic transfer switch shall be 42kAIC min.
2. The SPD for the generator and ATS shall be 200kA, in accordance with specification section 26 4313 – 2.02.

Questions

1. The plan has two pages of standard steel stud details; however, we can only identify the bathroom wall as the lone steel stud framed item in the plan set. Are there other areas where steel stud framing is intended?

   Response: *The bathroom wall and center dividing wall between the blower room and admin room are to be steel stud framed walls.*

2. Sunshade – It appears the roof of the sunshade is B deck over steel beams. We assume there is a roofing system intended for this structure, please provide details on how this roof is to be finished.

   Response: *The sunshade is 1.5" x 20 GA steel (B deck) over steel beams. No additional roofing system is required.*

3. Roof over blower room and admin room. S2.01 framing plan indicates this roof structure is a flat roof per detail 202 and 204 on S4.1. M7.0 shows some standing seam roof in the detail, the extent of which is unclear, along with the East elevation on sheet A4.0 may show standing seam roofing on the fascia. Please provide a roof plan with details on the intended roof structure and finishes and details of overhand framing if required as indicated on sheet A1.0.

   Response: *To achieve the overhang to the east side of the blower/admin building the structural roofing plan will be modified to show the deck on top of the wall and rotate the framing 90 degrees and extend over the CMU wall. The roofing system shall be provided above the structural deck and consists of a minimum R-38 roof panel insulation, per*

Yavapai County, and a standing seam metal roof system. Fascia, trim, attachments, and roofing support components shall be provided in accordance with the roofing manufacturer's recommendations and best practices. The roof shall have a minimum slope of 0.25:12 away from the SBR basins. Structural markups to be provided in subsequent addenda.

4. There are stoops drawn on the plan set outside of the double doors at the blower room and man door at the admin area. We do not find that they are called out anywhere to be included in the work. Are these part of the base bid or future amenities?

   Response: *The stoops are to be included in the work. Stoops and housekeeping pads shall be constructed per the 12" Concrete Equipment Pad Detail located on Sheet S1.3. Final dimensions shall be determined after equipment and building layout and sizing has been finalized.*

5. Electrical – P130 on sheet E3.1 is not on the conduit and wire schedule, please provide information for this run.

   Response: *P130 is a spare conduit. The conduit labeled P130 on the electrical site plan should be P132.*

6. We would like to ask for an extension on the bid due date.

   Response: *The bid due date has been extended to Wednesday, June 3rd at 2:30pm. The location will remain the same.*

7. Is the center wall in the blower/admin masonry?

   Response: *The center wall shall be metal studded wall, see typical steel stud wall per structural sheets.*

8. What type of framing is required for the bathroom walls?

   Response: *The bathroom walls shall be metal studded walls, see typical steel stud wall per structural sheets.*

9. What roof system is required? Sheet M7.0 states standing seam metal sloped roof but what support system?

   Response: *See response to question 3.*

10. Is the roof insulated? If so, what is required?

    Response: *Minimum R-38 roof panel insulation shall be supplied as required by Yavapai County.*

Jerome Wastewater Treatment Plant Improvements

ADDENDUM #5

Date: May 28, 2026

Quest CDN #9117808

This addendum is to formally issue responses to bidder questions and minor modifications.
Reminder: Acknowledge receipt of this addendum on the Bid Form.

The bid date is being extended to **Wednesday, June 3rd at 2:30pm.**

Attachments:

1. Attachment 1 – Framing Plan Revisions

Clarifications

Re: Roofing and Framing Details

1. Please see Attachment 1 for additional clarification on the proposed roofing system.

8723 E. Via de Commercio, #A-204 | Scottsdale, AZ 85258
P: (480) 991-3595 F: (480) 751-1810 | www.pacewater.com

PK ASSOCIATES, LLC
6900 E. Belleview Ave. #200
Greenwood Village, Colorado 80111
Phone: (720) 799-1058
Email: cadd@pkastructural.com
Website: www.pkastructural.com

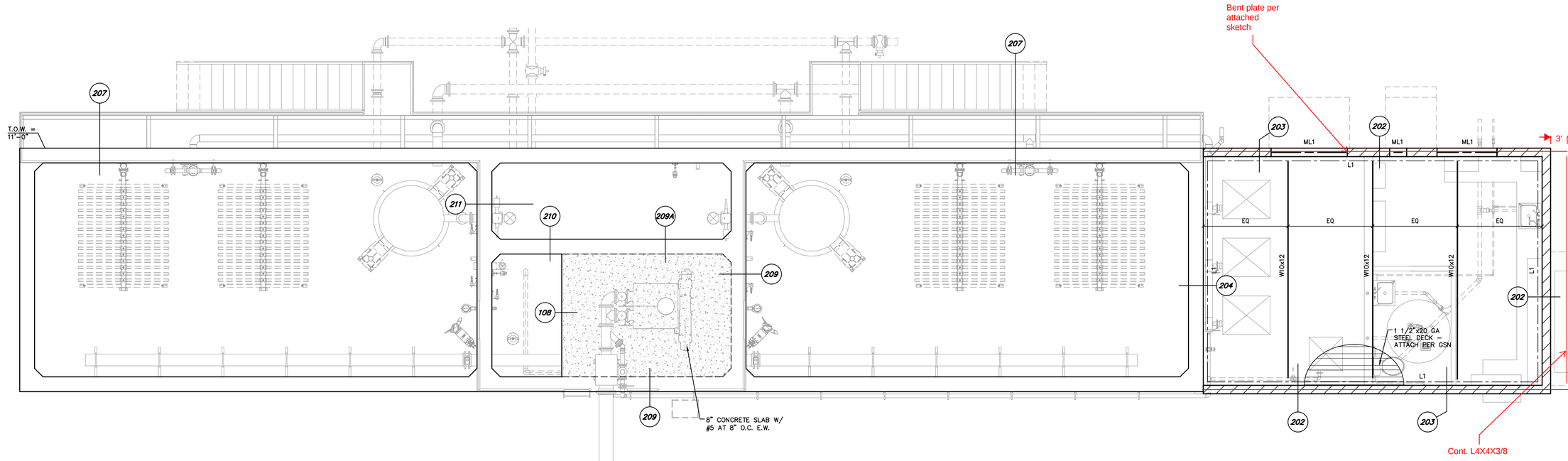

1 FRAMING PLAN

SCALE: 1/4"=1'-0"

LEDGER (L) SCHEDULE		
STEEL: 1. ALL LEDGERS SHALL HAVE MINIMUM OF 2 WELD PLATES OR ANCHOR BOLTS AS NOTED BELOW. 2. WELD PLATES OR ANCHOR BOLTS SHALL BE LOCATED NOT LESS THAN 6" NOR MORE THAN 1'-4" FROM END OF LEDGER OR LEDGER SPLICE.		
MARK	SIZE / TYPE	CONNECTION
L1	L4x4x1/4"	EMBED PER DETAIL 202 AND 204 AT 48" O.C.

MASONRY LINTEL (ML) SCHEDULE

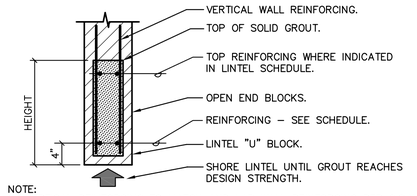

NOTE:
1. VERTICAL REINFORCING TO MATCH AND LAP WALL REINFORCING PER G.S.N.
2. EXTEND GROUT, OPEN END MASONRY UNITS AND REINFORCING 2'-0" PAST EACH JAMB. USE CORNER BARS WHERE 2'-0" CANNOT BE ACHIEVED.

MARK	HEIGHT	REINFORCING	REMARKS
ML1	16"	2- #5 BOTTOM	---

NO	BY	DATE	REVISIONS	DATE	APP.

Registered Professional Engineer (Civil) CERTIFICATE NO. 70374 JAMES APPLEYARD Date Signed 10/31/25 ARIZONA, U.S.A.

PREPARED BY: PKA
DESIGNED BY: JA
DRAWN BY: NS
CHECKED BY: JA
SCALE: AS NOTED
DATE: SEP 2025
JOB NO.: 23364

TITLE: FRAMING PLAN

THESE DRAWINGS ARE THE PROPERTY OF P.A.C.E. AND SHALL NOT BE REPRODUCED IN ANY MANNER NOR BE USED FOR CONSTRUCTION UNLESS STAMPED 'ISSUED FOR CONSTRUCTION'.

ISSUED FOR BID

JOB: TOWN OF JEROME WASTEWATER TREATMENT PLANT — YAVAPAI AZ

PREPARED BY: PACE Advanced Water Engineering
8723 E. VIA de VENTURA, SUITE 290 | SCOTTSDALE, CA 85258
P: (480) 991-3595 | www.paceadvisor.com
TAYLOR B. PIERCE R.C.E 70097 DATE

SHEET S2.01

60 OF 99 SHEETS

JOB NO. 23364

PK ASSOCIATES
CONSULTING STRUCTURAL ENGINEERS

Job Name Jerome

Job No. _____ Sheet No. _____

By J.A. Date 5/28/26

1. Steel deck
2. Cont. 1/4" bent steel plate
3. 1/2" x 6" x 6" steel plate w/ (2) 3/4" ø H.S. @ 4" O.C.
4. ± 1" dry pack
5. Cont. #5 in 8" deep grouted bond beam
6. Masonry Wall

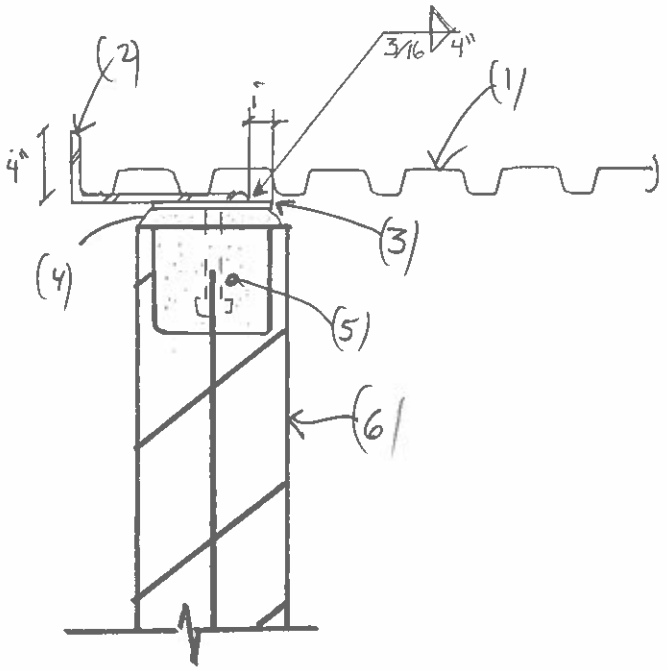

Steel Deck @ Masonry Wall

PK ASSOCIATES, LLC
6900 E. Belleview Ave. #200
Greenwood Village, Colorado 80111
Phone: (720) 799-1058
Email: cadd@pkastructural.com
Website: www.pkastructural.com

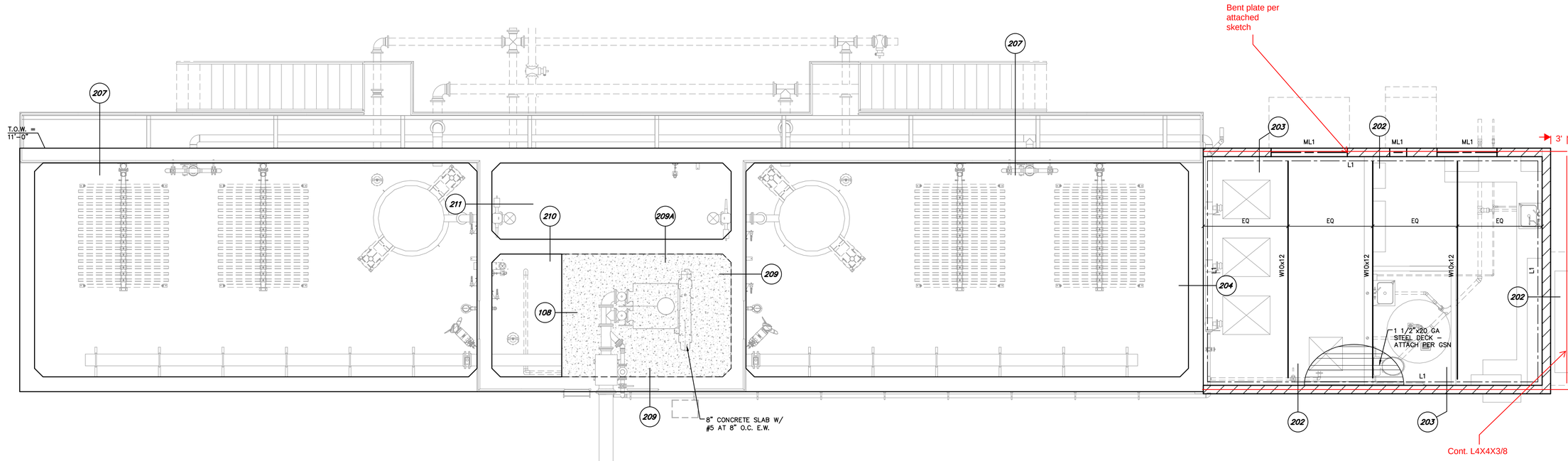

1 FRAMING PLAN

SCALE: 1/4"=1'-0"

LEDGER (L) SCHEDULE		
STEEL: 1. ALL LEDGERS SHALL HAVE MINIMUM OF 2 WELD PLATES OR ANCHOR BOLTS AS NOTED BELOW. 2. WELD PLATES OR ANCHOR BOLTS SHALL BE LOCATED NOT LESS THAN 6" NOR MORE THAN 1'-4" FROM END OF LEDGER OR LEDGER SPLICE.		
MARK	SIZE / TYPE	CONNECTION
L1	L4x4x1/4"	EMBED PER DETAIL 202 AND 204 AT 48" O.C.

MASONRY LINTEL (ML) SCHEDULE

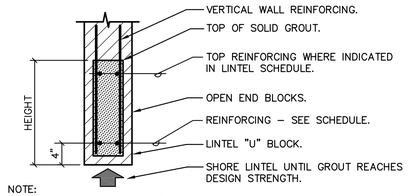

NOTE:
1. VERTICAL REINFORCING TO MATCH AND LAP WALL REINFORCING PER G.S.N.
2. EXTEND GROUT, OPEN END MASONRY UNITS AND REINFORCING 2'-0" PAST EACH JAMB. USE CORNER BARS WHERE 2'-0" CANNOT BE ACHIEVED.

MARK	HEIGHT	REINFORCING	REMARKS
ML1	16"	2- #5 BOTTOM	---

NO	BY	DATE	REVISIONS	DATE	APP.

Registered Professional Engineer (Civil) CERTIFICATE NO. 70374 JAMES APPLEYARD Date Signed 10/31/25 ARIZONA, U.S.A.

PREPARED BY: PKA
DESIGNED BY: JA
DRAWN BY: NS
CHECKED BY: JA
SCALE: AS NOTED
DATE: SEP 2025
JOB NO.: 23364

TITLE: FRAMING PLAN

THESE DRAWINGS ARE THE PROPERTY OF P.A.C.E. AND SHALL NOT BE REPRODUCED IN ANY MANNER NOR BE USED FOR CONSTRUCTION UNLESS STAMPED 'ISSUED FOR CONSTRUCTION'.

ISSUED FOR BID

JOB: TOWN OF JEROME WASTEWATER TREATMENT PLANT — YAVAPAI AZ

PREPARED BY: PACE Advanced Water Engineering
8723 E. VIA de VENTURA, SUITE 290 | SCOTTSDALE, CA 85258
P: (480) 991-3595 | www.paceadvisor.com
TAYLOR B. PIERCE R.C.E 70097 DATE

SHEET S2.01

60 OF 99 SHEETS

JOB NO. 23364

PK ASSOCIATES
CONSULTING STRUCTURAL ENGINEERS

Job Name Jerome

Job No. _____ Sheet No. _____

By J.A. Date 5/28/26

1. Steel deck
2. Cont. 1/4" bent steel plate
3. 1/2" x 6" x 6" steel plate w/ (2) 3/4" ø H.S. @ 4" O.C.
4. ± 1" dry pack
5. Cont. #5 in 8" deep grouted bond beam
6. Masonry Wall

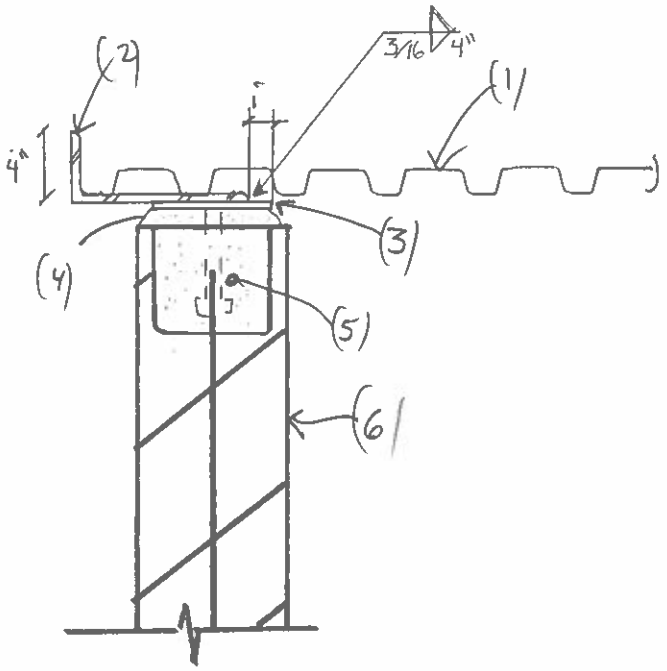

Steel Deck @ Masonry Wall

BID FORM FOR CONSTRUCTION CONTRACT
ADDENDUM 2 VERSION

Contractor Name: Fann Environmental, LLC

The terms used in this Bid with initial capital letters have the meanings stated in the Instructions to Bidders, the General Conditions, and the Supplementary Conditions.

ARTICLE 1—OWNER AND BIDDER

1.01 This Bid is submitted to:

Town of Jerome
Submitted electronically via email to tpierce@pacewater.com. Alternatively, Bidder may submit a hard copy the Town of Jerome, 600 Clark Street, Jerome, AZ 86331.

The undersigned Bidder proposes and agrees, if this Bid is accepted, to enter into an Agreement with Owner in the form included in the Bidding Documents to perform all Work as specified or indicated in the Bidding Documents for the prices and within the times indicated in this Bid and in accordance with the other terms and conditions of the Bidding Documents.

ARTICLE 2—ATTACHMENTS TO THIS BID

2.01 The following documents are submitted with and made a condition of this Bid:

A. Required Bid security;

B. List of Proposed Subcontractors;

~~C. List of Proposed Suppliers;~~

D. Evidence of authority to do business in the state of the Project; or a written covenant to obtain such authority within the time for acceptance of Bids;

E. Contractor's license number as evidence of Bidder's State Contractor's License or a covenant by Bidder to obtain said license within the time for acceptance of Bids;

F. Required Bidder Qualification Statement with supporting data; ~~and~~

G. If Bid amount exceeds $10,000, signed Compliance Statement (RD 400-6). Refer to specific equal opportunity requirements set forth in the Supplementary Conditions of the Construction Contract (EJCDC C-800);

H. If Bid amount exceeds $25,000, signed Certification Regarding Debarment, Suspension, Ineligibility and Voluntary Exclusion - Lower Tier Covered Transactions (AD-1048);

I. If Bid amount exceeds $100,000, signed RD Instruction 1940-Q Exhibit A-1, Certification for Contracts, Grants, and Loans.

ARTICLE 3—BASIS OF BID—LUMP SUM BID AND UNIT PRICES

3.01 *Lump Sum Bids*

A. Bidder will complete the Work in accordance with the Contract Documents for the following lump sum (stipulated) price(s), together with any Unit Prices indicated in Paragraph 3.02:

Copyright© 2018 National Society of Professional Engineers, American Council of Engineering Companies, and American Society of Civil Engineers. All rights reserved.

1. Lump Sum Price (Base Bid and Alternates)

BASE BID LUMP SUM BREAKDOWN					
	Item Description	Unit	Estimated Qty	Bid Unit Price	Total Bid Price
1	ACCESS ROAD & SITE WORK				
1.1	SWPPP	LS	1	$ 175,000.00	$ 175,000.00
1.2	Access Road (cut, grading, paving)	CY	3,672	$ 122.23	$ 448,828.56
1.3	Roadway Appurtenance (guardrail, gates, catch basins)	LS	1	$ 460,000.00	$ 460,000.00
1.4	Traffic Control	LS	1	$ 37,500.00	$ 37,500.00
2	12" SEWER LINE IMPROVEMENTS				
2.1	12" FPVC New Sewer Main	LF	149	$ 400.00	$ 59,600.00
2.2	Sewer Road Alignment Cut to Fill	CY	498	$ 95.00	$ 47,310.00
2.3	48" Manholes	EA	2	$ 10,500.00	$ 21,000.00
2.4	Bypass Plumbing and Equipment	LS	1	$ 26,000.00	$ 26,000.00
3	TREATMENT PLANT SITE				
3.1	Survey, Staking & Materials Testing	LS	1	$ 130,000.00	$ 130,000.00
3.2	Clearing & Grubbing	LS	1	$ 130,000.00	$ 130,000.00
3.3	Earthwork (Shoring, Erosion Control & Final Site Grading)	LS	1	$ 250,000.00	$ 250,000.00
3.4	Earthwork (Excavation, Fill & Backfill)	CY	1,628	$ 217.43	$ 353,976.04
3.5	Yard Piping	LS	1	$ 285,000.00	$ 285,000.00

Copyright© 2018 National Society of Professional Engineers, American Council of Engineering Companies, and American Society of Civil Engineers. All rights reserved.

BASE BID LUMP SUM BREAKDOWN					
	Item Description	Unit	Estimated Qty	Bid Unit Price	Total Bid Price
3.6	Fencing	LF	150	$ 95.00	$ 14,250.00
3.7	Blower / Admin Building	SF	528	$ 350.00	$ 184,800.00
3.8	Reed Bed Conversion to Drying Beds	LS	1	$ 450,000.00	$ 450,000.00
3.9	Wetland Cells Conversion to Emergency Overflow	LS	1	$ 408,175.00	$ 408,175.00
3.10	Retaining Walls	LF	295	$ 2,932.20	$ 864,999.00
3.11	Structural Concrete (SBR Tanks, Site, Chlorine Contact Channel)	CY	275	$ 3,200.00	$ 880,000.00
3.12	SBR Equipment	LS	1	$ 1,286,240.00	$ 1,286,240.00
3.13	Headworks Equipment	LS	1	$ 300,000.00	$ 300,000.00
3.14	Sludge Bagging Unit	LS	1	$ 197,972.00	$ 197,972.00
3.15	Polymer Dosing System	LS	1	$ 113,986.00	$ 113,986.00
3.16	Sludge Feed Pump	LS	1	$ 49,662.00	$ 49,662.00
3.17	Shade Structure	LS	1	$ 40,000.00	$ 40,000.00
3.18	Disinfection & Miscellaneous Equipment	LS	1	$ 30,000.00	$ 30,000.00
3.19	Site Electrical and Standby Generator	LS	1	$ 1,600,000.00	$ 1,600,000.00

Copyright© 2018 National Society of Professional Engineers, American Council of Engineering Companies, and American Society of Civil Engineers. All rights reserved.

BASE BID LUMP SUM BREAKDOWN					
	Item Description	**Unit**	**Estimated Qty**	**Bid Unit Price**	**Total Bid Price**
3.20	Upgrade Site to 3 Phase Power	LS	1	$ 210,000	$ 210,000.00
4	**OTHER**				
4.1	Mobilization/Demobilization	LS	1	$ 480,767.00	$ 480,767.00
4.2	Taxes	LS	1	$ 253,317.00	$ 253,317.00
				TOTAL BASE BID LUMP SUM AMOUNT	$ 9,788,382.60

BID ALTERNATES LUMP SUM BREAKDOWN NEW 12" SEWER AND ACCESS ROAD					
	Item Description	**Unit**	**Estimated Qty**	**Bid Unit Price**	**Total Bid Price**
1	**Bid Adder:** 12" FPVC New Sewer Main	LF	1,660	$ 195.25	$ 324,115.00
2	**Bid Adder:** Restore Lateral Connections	EA	5	$ 6,500.00	$ 32,500.00
3	**Bid Adder:** Sewer Road Alignment Cut to Fill	CY	4,010	$ 95.00	$ 380,950.00
4	**Bid Adder:** 48" Manholes	EA	10	$ 8,400.00	$ 84,000.00
5	**Bid Adder:** Rockfall Barrier	LF	150	$ 600.00	$ 90,000.00
				TOTAL ALTERNATES LUMP SUM AMOUNT	$ 911,565.00

Copyright© 2018 National Society of Professional Engineers, American Council of Engineering Companies, and American Society of Civil Engineers. All rights reserved.

TOTAL LUMP SUM PRICE (BASE BID AND ALTERNATES)			
	Item Description		**Total Bid Price**
1	Total Lump Sum for Base Bid	$	9,788,382.60
2	Total Lump Sum for Bid Adder: New 12" Sewer and Access Road	$	911,565.00
	TOTAL LUMP SUM BASE BID AND ALTERNATES PRICE	$	10,699,947.60

B. All specified cash allowance(s) are included in the price(s) set forth below, and have been computed in accordance with Paragraph 13.02 of the General Conditions.

TOTAL ALLOWANCE PRICE			
	Item Description		**Total Bid Price**
1	Materials Testing	$	65,000.00
	TOTAL ALLOWANCE PRICE	$	65,000.00

ARTICLE 4—DELETED

ARTICLE 5—DELETED

ARTICLE 6—TIME OF COMPLETION

6.01 Bidder agrees that the Work will be substantially complete and will be completed and ready for final payment in accordance with Paragraph 15.06 of the General Conditions on or before the dates or within the number of calendar days indicated in the Agreement.

6.02 **[Deleted]**

6.03 **[Deleted]**

6.04 Bidder accepts the provisions of the Agreement as to liquidated damages.

ARTICLE 7—BIDDER'S ACKNOWLEDGEMENTS: ACCEPTANCE PERIOD, INSTRUCTIONS, AND RECEIPT OF ADDENDA

7.01 *Bid Acceptance Period*

A. This Bid will remain subject to acceptance for 60 days after the Bid opening, or for such longer period of time that Bidder may agree to in writing upon request of Owner.

Copyright© 2018 National Society of Professional Engineers, American Council of Engineering Companies, and American Society of Civil Engineers. All rights reserved.

7.02 *Instructions to Bidders*

A. Bidder accepts all of the terms and conditions of the Instructions to Bidders, including without limitation those dealing with the disposition of Bid security.

7.03 *Receipt of Addenda*

A. Bidder hereby acknowledges receipt of the following Addenda:

Addendum Number	Addendum Date
1	5/7/2026
2	5/11/2026
3	5/20/2026
4	5/27/2026
5	5/28/2026

7.04 **[Deleted]**

ARTICLE 8—BIDDER'S REPRESENTATIONS AND CERTIFICATIONS

8.01 *Bidder's Representations*

A. In submitting this Bid, Bidder represents the following:

1. Bidder has examined and carefully studied the Bidding Documents, including Addenda.
2. **[Deleted]**
3. Bidder is familiar with all Laws and Regulations that may affect cost, progress, and performance of the Work**, including all American Iron and Steel requirements.**
4. Bidder has carefully studied the reports of explorations and tests of subsurface conditions at or adjacent to the Site and the drawings of physical conditions relating to existing surface or subsurface structures at the Site that have been identified in the Supplementary Conditions, with respect to the Technical Data in such reports and drawings.
5. Bidder has carefully studied the reports and drawings relating to Hazardous Environmental Conditions, if any, at or adjacent to the Site that have been identified in the Supplementary Conditions, with respect to Technical Data in such reports and drawings.
6. Bidder has considered the information known to Bidder itself; information commonly known to contractors doing business in the locality of the Site; information and observations obtained from visits to the Site; the Bidding Documents; and the Technical Data identified in the Supplementary Conditions or by definition, with respect to the effect of such information, observations, and Technical Data on (a) the cost, progress, and performance of the Work; (b) the means, methods, techniques, sequences, and procedures of construction to be employed by Bidder, if selected as Contractor; and (c) Bidder's (Contractor's) safety precautions and programs.
7. Based on the information and observations referred to in the preceding paragraph, Bidder agrees that no further examinations, investigations, explorations, tests, studies,

Copyright© 2018 National Society of Professional Engineers, American Council of Engineering Companies, and American Society of Civil Engineers. All rights reserved.

or data are necessary for the performance of the Work at the Contract Price, within the Contract Times, and in accordance with the other terms and conditions of the Contract.

8. Bidder is aware of the general nature of work to be performed by Owner and others at the Site that relates to the Work as indicated in the Bidding Documents.

9. Bidder has given Engineer written notice of all conflicts, errors, ambiguities, or discrepancies that Bidder has discovered in the Bidding Documents, and of discrepancies between Site conditions and the Contract Documents, and the written resolution thereof by Engineer is acceptable to Contractor.

10. The Bidding Documents are generally sufficient to indicate and convey understanding of all terms and conditions for performance and furnishing of the Work.

11. The submission of this Bid constitutes an incontrovertible representation by Bidder that without exception the Bid and all prices in the Bid are premised upon performing and furnishing the Work required by the Bidding Documents.

8.02 *Bidder's Certifications*

A. The Bidder certifies the following:

1. This Bid is genuine and not made in the interest of or on behalf of any undisclosed individual or entity and is not submitted in conformity with any collusive agreement or rules of any group, association, organization, or corporation.

2. Bidder has not directly or indirectly induced or solicited any other Bidder to submit a false or sham Bid.

3. Bidder has not solicited or induced any individual or entity to refrain from bidding.

4. Bidder has not engaged in corrupt, fraudulent, collusive, or coercive practices in competing for the Contract. For the purposes of this Paragraph 8.02.A:

a. Corrupt practice means the offering, giving, receiving, or soliciting of anything of value likely to influence the action of a public official in the bidding process.

b. Fraudulent practice means an intentional misrepresentation of facts made (a) to influence the bidding process to the detriment of Owner, (b) to establish bid prices at artificial non-competitive levels, or (c) to deprive Owner of the benefits of free and open competition.

c. Collusive practice means a scheme or arrangement between two or more Bidders, with or without the knowledge of Owner, a purpose of which is to establish bid prices at artificial, non-competitive levels.

d. Coercive practice means harming or threatening to harm, directly or indirectly, persons or their property to influence their participation in the bidding process or affect the execution of the Contract.

Copyright© 2018 National Society of Professional Engineers, American Council of Engineering Companies, and American Society of Civil Engineers. All rights reserved.

BIDDER hereby submits this Bid as set forth above:

Bidder:

Fann Environmental, LLC
(typed or printed name of organization)

By: _____
(individual's signature)

Name: Michael S. Young
(typed or printed)

Title: President
(typed or printed)

Date: 06/03/2026
(typed or printed)

If Bidder is a corporation, a partnership, or a joint venture, attach evidence of authority to sign.

Attest: _____
(individual's signature)

Name: Poppy Keegan
(typed or printed)

Title: Executive Assistant
(typed or printed)

Date: 06/03/2026
(typed or printed)

Address for giving notices:
6708 Corsair Ave Ste A
Prescott AZ 86301

Bidder's Contact:

Name: Michael S. Young
(typed or printed)

Title: President
(typed or printed)

Phone: (928) 778-5335

Email: mikeyoung@fannenvironmental.com

Address:
6708 Corsair Ave Ste A
Prescott AZ 86301

Bidder's Contractor License No.: (if applicable) AZ ROC#s 206365-A, 249529-B, 276357-CR11

Copyright© 2018 National Society of Professional Engineers, American Council of Engineering Companies, and American Society of Civil Engineers. All rights reserved.

BID BOND (PENAL SUM FORM)

Bidder	**Surety**
Name: Fann Environmental, LLC Address *(principal place of business)*: 6708 Corsair Avenue Suite A Prescott, AZ 86301	Name: Liberty Mutual Insurance Company Address *(principal place of business)*: 175 Berkeley Street, Boston MA 02117
Owner	**Bid**
Name: **Town of Jerome** Address *(principal place of business)*: **600 Clark Street, Jerome AZ, 86331**	Project *(name and location)*: **Jerome Wastewater Treatment Plant Improvements, Sewer Plant Road, Jerome, AZ 86331** Bid Due Date: **June 1, 2026**

Bond

Penal Sum: Ten percent (10%) of total bid amount

Date of Bond: June 1, 2026

Surety and Bidder, intending to be legally bound hereby, subject to the terms set forth in this Bid Bond, do each cause this Bid Bond to be duly executed by an authorized officer, agent, or representative.

Bidder	Surety
Fann Environmental, LLC *(Full formal name of Bidder)*	Liberty Mutual Insurance Company *(Full formal name of Surety) (corporate seal)*
By: _____ *(Signature)*	By: _____ *(Signature) (Attach Power of Attorney)*
Name: MICHAEL YOUNG *(Printed or typed)*	Name: Desirae Darko *(Printed or typed)*
Title: PRESIDENT	Title: Attorney-in-Fact
Attest: _____ *(Signature)*	Attest: _____ *(Signature)*
Name: Poppy Keegan *(Printed or typed)*	Name: Genny Beswick *(Printed or typed)*
Title: Executive Assistant	Title: CL Account Manager

Notes: (1) Note: Addresses are to be used for giving any required notice. (2) Provide execution by any additional parties, such as joint venturers, if necessary.

EJCDC® C-430, Bid Bond (Penal Sum Form).
Copyright© 2018 National Society of Professional Engineers, American Council of Engineering Companies, and American Society of Civil Engineers. All rights reserved.

1. Bidder and Surety, jointly and severally, bind themselves, their heirs, executors, administrators, successors, and assigns to pay to Owner upon default of Bidder the penal sum set forth on the face of this Bond. Payment of the penal sum is the extent of Bidder's and Surety's liability. Recovery of such penal sum under the terms of this Bond will be Owner's sole and exclusive remedy upon default of Bidder.

2. Default of Bidder occurs upon the failure of Bidder to deliver within the time required by the Bidding Documents (or any extension thereof agreed to in writing by Owner) the executed Agreement required by the Bidding Documents and any performance and payment bonds required by the Bidding Documents.

3. This obligation will be null and void if:

   3.1. Owner accepts Bidder's Bid and Bidder delivers within the time required by the Bidding Documents (or any extension thereof agreed to in writing by Owner) the executed Agreement required by the Bidding Documents and any performance and payment bonds required by the Bidding Documents, or

   3.2. All Bids are rejected by Owner, or

   3.3. Owner fails to issue a Notice of Award to Bidder within the time specified in the Bidding Documents (or any extension thereof agreed to in writing by Bidder and, if applicable, consented to by Surety when required by Paragraph 5 hereof).

4. Payment under this Bond will be due and payable upon default of Bidder and within 30 calendar days after receipt by Bidder and Surety of written notice of default from Owner, which notice will be given with reasonable promptness, identifying this Bond and the Project and including a statement of the amount due.

5. Surety waives notice of any and all defenses based on or arising out of any time extension to issue Notice of Award agreed to in writing by Owner and Bidder, provided that the total time for issuing Notice of Award including extensions does not in the aggregate exceed 120 days from the Bid due date without Surety's written consent.

6. No suit or action will be commenced under this Bond prior to 30 calendar days after the notice of default required in Paragraph 4 above is received by Bidder and Surety, and in no case later than one year after the Bid due date.

7. Any suit or action under this Bond will be commenced only in a court of competent jurisdiction located in the state in which the Project is located.

8. Notices required hereunder must be in writing and sent to Bidder and Surety at their respective addresses shown on the face of this Bond. Such notices may be sent by personal delivery, commercial courier, or by United States Postal Service registered or certified mail, return receipt requested, postage pre-paid, and will be deemed to be effective upon receipt by the party concerned.

9. Surety shall cause to be attached to this Bond a current and effective Power of Attorney evidencing the authority of the officer, agent, or representative who executed this Bond on behalf of Surety to execute, seal, and deliver such Bond and bind the Surety thereby.

10. This Bond is intended to conform to all applicable statutory requirements. Any applicable requirement of any applicable statute that has been omitted from this Bond will be deemed to be included herein as if set forth at length. If any provision of this Bond conflicts with any applicable statute, then the provision of said statute governs and the remainder of this Bond that is not in conflict therewith continues in full force and effect.

11. The term "Bid" as used herein includes a Bid, offer, or proposal as applicable.

Copyright© 2018 National Society of Professional Engineers, American Council of Engineering Companies, and American Society of Civil Engineers. All rights reserved.

POWER OF ATTORNEY

Liberty Mutual Insurance Company
The Ohio Casualty Insurance Company
West American Insurance Company

Certificate No: **8213139 - 969537**

KNOWN ALL PERSONS BY THESE PRESENTS: That The Ohio Casualty Insurance Company is a corporation duly organized under the laws of the State of New Hampshire, that Liberty Mutual Insurance Company is a corporation duly organized under the laws of the State of Massachusetts, and West American Insurance Company is a corporation duly organized under the laws of the State of Indiana (herein collectively called the "Companies"), pursuant to and by authority herein set forth, does hereby name, constitute and appoint, Blake C. Johnson, Cliff Spickler, Desirae Darko, Halle Finn, Lori L. Dawson - Brown, Nick Duckworth, Wendy Capirci

all of the city of Phoenix state of AZ each individually if there be more than one named, its true and lawful attorney-in-fact to make, execute, seal, acknowledge and deliver, for and on its behalf as surety and as its act and deed, any and all undertakings, bonds, recognizances and other surety obligations, in pursuance of these presents and shall be as binding upon the Companies as if they have been duly signed by the president and attested by the secretary of the Companies in their own proper persons.

IN WITNESS WHEREOF, this Power of Attorney has been subscribed by an authorized officer or official of the Companies and the corporate seals of the Companies have been affixed thereto this 14th day of February, 2025.

Liberty Mutual Insurance Company
The Ohio Casualty Insurance Company
West American Insurance Company

By: _____
Nathan J. Zangerle, Assistant Secretary

State of PENNSYLVANIA
County of MONTGOMERY ss

On this 14th day of February, 2025 before me personally appeared Nathan J. Zangerle, who acknowledged himself to be the Assistant Secretary of Liberty Mutual Insurance Company, The Ohio Casualty Company, and West American Insurance Company, and that he, as such, being authorized so to do, execute the foregoing instrument for the purposes therein contained by signing on behalf of the corporations by himself as a duly authorized officer.

IN WITNESS WHEREOF, I have hereunto subscribed my name and affixed my notarial seal at Plymouth Meeting, Pennsylvania, on the day and year first above written.

Commonwealth of Pennsylvania - Notary Seal
Teresa Pastella, Notary Public
Montgomery County
My commission expires March 28, 2029
Commission number 1126044
Member, Pennsylvania Association of Notaries

By: _____
Teresa Pastella, Notary Public

This Power of Attorney is made and executed pursuant to and by authority of the following By-laws and Authorizations of The Ohio Casualty Insurance Company, Liberty Mutual Insurance Company, and West American Insurance Company which resolutions are now in full force and effect reading as follows:

ARTICLE IV – OFFICERS: Section 12. Power of Attorney.
Any officer or other official of the Corporation authorized for that purpose in writing by the Chairman or the President, and subject to such limitation as the Chairman or the President may prescribe, shall appoint such attorneys-in-fact, as may be necessary to act in behalf of the Corporation to make, execute, seal, acknowledge and deliver as surety any and all undertakings, bonds, recognizances and other surety obligations. Such attorneys-in-fact, subject to the limitations set forth in their respective powers of attorney, shall have full power to bind the Corporation by their signature and execution of any such instruments and to attach thereto the seal of the Corporation. When so executed, such instruments shall be as binding as if signed by the President and attested to by the Secretary. Any power or authority granted to any representative or attorney-in-fact under the provisions of this article may be revoked at any time by the Board, the Chairman, the President or by the officer or officers granting such power or authority.

ARTICLE XIII – Execution of Contracts: Section 5. Surety Bonds and Undertakings.
Any officer of the Company authorized for that purpose in writing by the chairman or the president, and subject to such limitations as the chairman or the president may prescribe, shall appoint such attorneys-in-fact, as may be necessary to act in behalf of the Company to make, execute, seal, acknowledge and deliver as surety any and all undertakings, bonds, recognizances and other surety obligations. Such attorneys-in-fact subject to the limitations set forth in their respective powers of attorney, shall have full power to bind the Company by their signature and execution of any such instruments and to attach thereto the seal of the Company. When so executed such instruments shall be as binding as if signed by the president and attested by the secretary.

Certificate of Designation – The President of the Company, acting pursuant to the Bylaws of the Company, authorizes Nathan J. Zangerle, Assistant Secretary to appoint such attorneys-in-fact as may be necessary to act on behalf of the Company to make, execute, seal, acknowledge and deliver as surety any and all undertakings, bonds, recognizances and other surety obligations.

Authorization – By unanimous consent of the Company's Board of Directors, the Company consents that facsimile or mechanically reproduced signature of any assistant secretary of the Company, wherever appearing upon a certified copy of any power of attorney issued by the Company in connection with surety bonds, shall be valid and binding upon the Company with the same force and effect as though manually affixed.

I, Renee C. Llewellyn, the undersigned, Assistant Secretary, The Ohio Casualty Insurance Company, Liberty Mutual Insurance Company, and West American Insurance Company do hereby certify that the original power of attorney of which the foregoing is a full, true and correct copy of the Power of Attorney executed by said Companies, is in full force and effect and has not been revoked.

IN TESTIMONY WHEREOF, I have hereunto set my hand and affixed the seals of said Companies this 1st day of June, 2026.

By: _____
Renee C. Llewellyn, Assistant Secretary

Not valid for mortgage, note, loan, letter of credit, currency rate, interest rate or residual value guarantees.

For bond and/or Power of Attorney (POA) verification inquiries, please call 610-832-8240 or email HOSUR@libertymutual.com.

QUALIFICATIONS STATEMENT

ARTICLE 1—GENERAL INFORMATION

1.01 Provide contact information for the Business:

Legal Name of Business:	Fann Environmental, LLC		
Corporate Office			
Name:	Michael S. Young	Phone number:	(928) 778-5335
Title:	President	Email address:	mikeyoung@fannenvironmental.com
Business address of corporate office:	Using Clark Street, or PO Box? Corsair Ave		
	6708 Corsair Ave Ste A		
	Prescott AZ 86301		
Local Office			
Name:	Michael S. Young	Phone number:	(928) 778-5335
Title:	President	Email address:	mikeyoung@fannenvironmental.com
Business address of local office:	6708 Corsair Ave Ste A		
	Prescott AZ 86301		

1.02 Provide information on the Business's organizational structure:

Form of Business:	☐ Sole Proprietorship ☐ Partnership ☐ Corporation		
☒ Limited Liability Company ☐ Joint Venture comprised of the following companies:			
	1.		
	2.		
	3.		
Provide a separate Qualification Statement for each Joint Venturer.			
Date Business was formed:	10/2004	State in which Business was formed:	AZ
Is this Business authorized to operate in the Project location?	☒ Yes ☐ No ☐ Pending		

1.03 Identify all businesses that own Business in whole or in part (25% or greater), or that are wholly or partly (25% or greater) owned by Business:

Name of business:	N/A	Affiliation:	
Address:			
Name of business:		Affiliation:	
Address:			
Name of business:		Affiliation:	

Copyright© 2018 National Society of Professional Engineers, American Council of Engineering Companies, and American Society of Civil Engineers. All rights reserved.

Address:	

1.04 Provide information regarding the Business's officers, partners, and limits of authority.

Name:	Michael Young	Title:	President
Authorized to sign contracts: ☒ Yes ☐ No		Limit of Authority:	$ N/A
Name:	Michael Fann	Title:	Majority Member
Authorized to sign contracts: ☒ Yes ☐ No		Limit of Authority:	$ N/A
Name:	Linda O'Brien	Title:	Member
Authorized to sign contracts: ☐ Yes ☒ No		Limit of Authority:	$ 0
Name:	Gary Steinmetz, Dan Lee, Laurie Young	Title:	Members (non-signing)

ARTICLE 2—LICENSING

2.01 Provide information regarding licensure for Business:

Name of License:	A General Engineering		
Licensing Agency:	Arizona Registrar of Contractors		
License No:	206365	Expiration Date:	04/30/2027
Name of License:	B-1 General Commercial Contractor		
Licensing Agency:	Arizona Registrar of Contractors		
License No:	249529	Expiration Date:	09/30/2026

ARTICLE 3—DIVERSE BUSINESS CERTIFICATIONS

3.01 Provide information regarding Business's Diverse Business Certification, if any. Provide evidence of current certification.

Certification	Certifying Agency	Certification Date
☐ Disadvantaged Business Enterprise		
☐ Minority Business Enterprise		
☐ Woman-Owned Business Enterprise		
☐ Small Business Enterprise		
☐ Disabled Business Enterprise		
☐ Veteran-Owned Business Enterprise		
☐ Service-Disabled Veteran-Owned Business		
☐ HUBZone Business (Historically Underutilized) Business		
☐ Other		

Copyright© 2018 National Society of Professional Engineers, American Council of Engineering Companies, and American Society of Civil Engineers. All rights reserved.

☒ None

ARTICLE 4—SAFETY

4.01 Provide information regarding Business's safety organization and safety performance.

Name of Business's Safety Officer:	Paul Johnson	
Safety Certifications		
Certification Name	Issuing Agency	Expiration
OSHA 30-Hour Construction	USF OSHA Training Institute	N/A
OSHA Competent-Person Scaffolding	MN Assoc Builders & Contractors	N/A

4.02 Provide Worker's Compensation Insurance Experience Modification Rate (EMR), Total Recordable Frequency Rate (TRFR) for incidents, and Total Number of Recorded Manhours (MH) for the last 3 years and the EMR, TRFR, and MH history for the last 3 years of any proposed Subcontractor(s) that will provide Work valued at 10% or more of the Contract Price. Provide documentation of the EMR history for Business and Subcontractor(s).

*Note - Fann Environmental shares an insurance policy with Fann Contracting, therefore our EMR is impacted by their safety record. TRFR & MH are listed for Fann Env only per OSHA 300A. We had only a small cut w/ a few stitches in 2024 and a spider bite in 2023.

Year	2025			2024			2023		
Company	EMR	TRFR	MH	EMR	TRFR	MH	EMR	TRFR	MH
Fann Environmental	1.03*	0.00	34952	1.06*	5.44	36745	1.10*	5.47	36589

ARTICLE 5—FINANCIAL

5.01 Provide information regarding the Business's financial stability. Provide the most recent audited financial statement, and if such audited financial statement is not current, also provide the most current financial statement.

Financial Institution:	National Bank of Arizona	
Business address:	162 S Montezuma St Prescott AZ 86303	
Date of Business's most recent financial statement:	3/2026	☒ Attached
Date of Business's most recent audited financial statement:	N/A	☐ Attached
Financial indicators from the most recent financial statement		
Contractor's Current Ratio (Current Assets ÷ Current Liabilities)		2.47
Contractor's Quick Ratio ((Cash and Cash Equivalents + Accounts Receivable + Short Term Investments) ÷ Current Liabilities)		2.47

Copyright© 2018 National Society of Professional Engineers, American Council of Engineering Companies, and American Society of Civil Engineers. All rights reserved.

ARTICLE 6—SURETY INFORMATION

6.01 Provide information regarding the surety company that will issue required bonds on behalf of the Business, including but not limited to performance and payment bonds.

Surety Name:	Liberty Mutual Insurance Company		
Surety is a corporation organized and existing under the laws of the state of:		Massachusetts	
Is surety authorized to provide surety bonds in the Project location?		☒ Yes ☐ No	
Is surety listed in "Companies Holding Certificates of Authority as Acceptable Sureties on Federal Bonds and as Acceptable Reinsuring Companies" published in Department Circular 570 (as amended) by the Bureau of the Fiscal Service, U.S. Department of the Treasury? ☒ Yes ☐ No			
Mailing Address (principal place of business):	Agency of Record: INSURICA Southwest Insurance Services, LLC		
	4686 E Van Buren #310		
	Phoenix AZ 85008		
Physical Address (principal place of business):	4686 E Van Buren #310		
	Phoenix AZ 85008		
Phone (main):	(602) 273-1625	Phone (claims):	(602) 273-1625

ARTICLE 7—INSURANCE

7.01 Provide information regarding Business's insurance company(s), including but not limited to its Commercial General Liability carrier. Provide information for each provider.

Name of insurance provider, and type of policy (CLE, auto, etc.):			
Insurance Provider		Type of Policy (Coverage Provided)	
Phoenix Insurance Company		Commercial General Liability, Workers Comp	
Traveler's Indemnity Co of CT		Automobile Liability	
Traveler's Property Casualty Co of America		Umbrella	
St Paul Surplus Lines Insurance Co Zurich American Insurance Co		Pollution & Professional Liability Installation Floater & Contractors Equipment	
Are providers licensed or authorized to issue policies in the Project location?			☒ Yes ☐ No
Does provider have an A.M. Best Rating of A-VII or better?			☒ Yes ☐ No
Mailing Address (principal place of business):	Willis Towers Watson Insurance Services West, Inc.		
	PO Box 305191		
	Nashville TN 37230		
Physical Address (principal place of business):	Willis Towers Watson Insurance Services West, Inc.		
	1144 W Washington St		
	Tempe AZ 85288		
Phone (main):	(602) 245-6020	Phone (claims):	(602) 245-6020

Copyright© 2018 National Society of Professional Engineers, American Council of Engineering Companies, and American Society of Civil Engineers. All rights reserved.

ARTICLE 8—CONSTRUCTION EXPERIENCE

8.01 Provide information that will identify the overall size and capacity of the Business.

Average number of current full-time employees:	18
Estimate of revenue for the current year:	$9,000,000
Estimate of revenue for the previous year:	$9,616,000

8.02 Provide information regarding the Business's previous contracting experience.

Years of experience with projects like the proposed project:				
As a general contractor:	21	As a joint venturer:	8	
Has Business, or a predecessor in interest, or an affiliate identified in Paragraph 1.03:				
Been disqualified as a bidder by any local, state, or federal agency within the last 5 years? ☐ Yes ☒ No				
Been barred from contracting by any local, state, or federal agency within the last 5 years? ☐ Yes ☒ No				
Been released from a bid in the past 5 years? ☐ Yes ☒ No				
Defaulted on a project or failed to complete any contract awarded to it? ☐ Yes ☒ No				
Refused to construct or refused to provide materials defined in the contract documents or in a change order? ☐ Yes ☒ No				
Been a party to any currently pending litigation or arbitration? ☐ Yes ☒ No				
Provide full details in a separate attachment if the response to any of these questions is Yes.				

8.03 List all projects currently under contract in Schedule A and provide indicated information.

8.04 List a minimum of three and a maximum of six projects completed in the last 5 years in Schedule B and provide indicated information to demonstrate the Business's experience with projects similar in type and cost of construction.

8.05 In Schedule C, provide information on key individuals whom Business intends to assign to the Project. Provide resumes for those individuals included in Schedule C. Key individuals include the Project Manager, Project Superintendent, Quality Manager, and Safety Manager. Resumes may be provided for Business's key leaders as well.

ARTICLE 9—REQUIRED ATTACHMENTS

9.01 Provide the following information with the Statement of Qualifications:

A. If Business is a Joint Venture, separate Qualifications Statements for each Joint Venturer, as required in Paragraph 1.02. N/A

B. Diverse Business Certifications if required by Paragraph 3.01. None

C. Certification of Business's safety performance if required by Paragraph 4.02. Attached

D. Financial statements as required by Paragraph 5.01. Attached

Copyright© 2018 National Society of Professional Engineers, American Council of Engineering Companies, and American Society of Civil Engineers. All rights reserved.

E. Attachments providing additional information as required by Paragraph 8.02. N/A

F. Schedule A (Current Projects) as required by Paragraph 8.03. Attached

G. Schedule B (Previous Experience with Similar Projects) as required by Paragraph 8.04. Attached

H. Schedule C (Key Individuals) and resumes for the key individuals listed, as required by Paragraph 8.05. Attached

I. Additional items as pertinent.

List of Proposed Subcontractors
Resolution of Signing Authority for LLC
Evidence of Authority to Do Business
Evidence of Licensure
Compliance Statement
Certification Regarding Debarment
Certification for Contracts

Copyright© 2018 National Society of Professional Engineers, American Council of Engineering Companies, and American Society of Civil Engineers. All rights reserved.

This Statement of Qualifications is offered by:

Business: Fann Environmental, LLC
(typed or printed name of organization)

By: 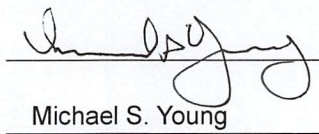
(individual's signature)

Name: Michael S. Young
(typed or printed)

Title: President
(typed or printed)

Date: 06/03/2026
(date signed)

(If Business is a corporation, a partnership, or a joint venture, attach evidence of authority to sign.)

Attest: 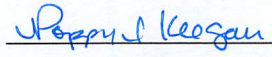
(individual's signature)

Name: Poppy Keegan
(typed or printed)

Title: Executive Assistant
(typed or printed)

Address for giving notices:
6708 Corsair Ave Ste A
Prescott, AZ 86301

Designated Representative:

Name: Michael S. Young
(typed or printed)

Title: President
(typed or printed)

Address:
6708 Corsair Ave Ste A
Prescott, AZ 86301

Phone: (928) 778-5335

Email: mikeyoung@fannenvironmental.com

EJCDC C-451, Qualifications Statement.
Copyright© 2018 National Society of Professional Engineers, American Council of Engineering Companies, and American Society of Civil Engineers. All rights reserved.

FANN Environmental, LLC
One Stop Environmental Solutions
6708 Corsair Ave., Suite A • Prescott, AZ 86301 • Phone: 928-778-5335 • Fax: 928-778-5870 • ROC-A-206365 • ROC B-249529

Article 9
Required Attachments

A. Joint Venture Qualifications - Not Applicable
B. Diverse Business Certifications - Not Applicable
C. Certification of Business Safety Performance
D. Financial Statement
E. Additional Info - Not Applicable
F. Schedule A Current Projects
G. Schedule B Previous Experience
H. Schedule C Key Individuals and Resumes
I. Additional Items as Pertinent:
   1. List of Proposed Subcontractors
   2. Resolution of Signing Authority
   3. Corporation Commission Entity Info (Evidence of Bidder's authority to do business in the state per 12.11)
   4. Contractor's Licenses (Evidence of Bidder's Licensure per 12.12)
   5. Compliance Statement (RD400-6)
   6. Certification Regarding Debarment (AD-1048)
   7. Certification for Contracts (RD Instruction 1940-Q Exhibit A-1)

Required Attachment C:
Certification of Safety Performance

June 1, 2026

RE: Fann Environmental, LLC
6708 Corsair Ave., Suite A
Prescott, AZ 86301

Workers Compensation Experience Modification History – 3 Years NCCI

To Whom It May Concern:

Willis Towers Watson, the insurance broker for Fann Environmental, LLC, confirms Fann Environmental' s 3 Year NCCI Experience Modification rate history is as follows:

EMOD Effective Date	NCCI EMOD
11/1/25	1.03
11/1/24	1.06
6/1/24	1.06
6/1/23	1.10

Please contact me should there be any questions regarding this information.

Sincerely,

Deanna Chew, CPCU, ARM, CRIS
Sr. Client Advocate
CA License # OL97350

Willis Towers Watson Insurance Services West, Inc.
d/b/a Willis Towers Watson West Insurance Services, Inc.
CA Insurance License # 0371719

1144 W. Washington Street
Tempe, AZ 85288
D: +1 602 787 6137
O: +1 602 245 6020
deanna.chew@wtwco.com

Required Attachment D:
Financial Statements

Fann Environmental LLC

Financial Statements

March 2026



Fann Environmental, LLC
Income Statement
March 2026

	Current Month	Year to Date	Previous Year to Date
Earned Revenue	$ 566,037	$ 1,793,329	$ 2,060,531
Cost of Earned Revenue	334,108	840,279	1,387,830
	231,929	**953,050**	**672,701**
Equipment Cost	10,438	8,701	5,548
Equipment and Job Overhead	34,188	93,032	63,772
	44,626	**101,733**	**69,320**
Gross Profit From Operations	**187,303**	**851,317**	**603,381**
Estimating Costs	4,744	14,727	12,793
Salaries	24,327	67,549	61,919
Payroll Expenses	-	-	-
Bonuses	-	-	-
Advertising	141	505	34
Contributions	582	737	994
Depreciation	211	634	553
Dues and Subscriptions	-	-	-
Interest	-	-	-
Insurance	7,722	23,165	21,005
Legal and Accounting	2,310	7,064	4,759
Office Expense	32	1,217	1,451
Rent	2,000	6,000	6,000
Taxes and Licenses	-	287	75
Travel and Entertainment	36	286	42
Telephone and Utilities	1,545	5,119	5,106
Bank Charges	(30)	(286)	(269)
Bad Debts	-	-	-
Computer Expenses	2,833	7,888	7,926
Employee Education	347	347	185
Building Maintenance and Repair	340	837	2,515
Miscellaneous	-	-	-
Total Administrative Expenses	**47,140**	**136,076**	**125,088**
Gain on Sale of Assets	-	19,643	-
Arizona Income Tax	-	-	-
Interest Income	2,213	4,891	14,322
Other Income (Expense)	4,392	5,838	3,636
NET INCOME (LOSS)	**146,768**	**745,613**	**496,251**
MEMBERS' DISTRIBUTIONS (Cash)	**-**	**-**	**(182,963)**
MEMBERS' DISTRIBUTIONS (Non-Cash)			
MEMBERS' EQUITY, beginning of period	**2,026,451**	**1,427,606**	**2,132,879**
MEMBERS' EQUITY, end of period	**$2,173,219**	**$ 2,173,219**	**$2,446,167**

Fann Environmental, LLC
Balance Sheet
March 2026

ASSETS	Current Year	Previous Year
Current Assets		
Cash	1,027,131	1,726,081
Accounts Receivable	1,887,275	1,563,403
Contract Assets	92,121	110,138
Deposits and Other Current Assets	3,907	4,036
Total Current Assets	**3,010,434**	**3,403,658**
Fixed Asssets		
Office & Computer Equipment	24,145	60,163
Construction Equipment	413,088	413,088
Trucks	761,167	679,011
Leasehold Improvements	13,597	13,597
	1,211,997	**1,165,860**
Less Accumulated Depreciation	831,751	764,685
Total Fixed Assets	**380,246**	**401,175**
TOTAL ASSETS	**3,390,680**	**3,804,833**
LIABILITIES AND MEMBERS' EQUITY		
Current Liabilities		
Accounts Payable	188,631	650,047
Contract Liabilities	949,935	684,695
Accrued Payroll and Related Liabilities	78,895	23,924
Total Current Liabilities	**1,217,461**	**1,358,666**
MEMBERS' EQUITY		
Members' contributions	10,000	10,000
Members' distributions	-	(182,963)
Retained earnings	2,163,219	2,619,130
Total Members' Equity	**2,173,219**	**2,446,167**
EQUITY	**3,390,680**	**$ 3,804,833**

Fann Environmental, LLC
Statement of Cash Flows
March 2026

Cash Flows from Operating Activities	end of 2025	current	Year to Date
Net Income (Loss)			**$ 745,613**
Adjustment to reconcile net income to net cash			
Accounts Receivable			
Depreciation			27,338
Gain on Sale of Assets			(19,643)
(Increase) Decrease in:			
Accounts Receivable	967,096	1,887,275	(920,179)
Contract Assets	202,770	92,121	110,649
Prepaid Expense & Deposits	9,768	3,907	5,861
Increase (Decrease) in:			
Accounts Payable	282,806	188,631	(94,175)
Contract Liabilities	571,707	949,935	378,228
Accrued Expense	55,965	78,645	22,680
Net Cash provided by Operating Activities			**256,372**
Cash Flows from Investing Activities			
Purchases of Property and Equipment		12,000	(12,000)
Proceeds from Sales of Assets		60,000	60,000
Net Cash used by Investing Activities			**48,000**
Cash Flows from Financing Activities			
Member Distributions		-	-
Net Cash used by Financing Activities			**-**
Net Increase (Decrease) in Cash			**$ 304,372**
Cash at beginning of period			**722,759**
Cash at end of period			**1,027,131**
Net Increase (Decrease) in Cash			**$ 304,372**
Non-Cash Transactions:			
			$ -

Schedule A—Current Projects

Name of Organization	Fann Environmental, LLC				
Project Owner	City of Prescott		Project Name	Yavapai Hills #1 Lift Station Rehabilitation	
General Description of Project	Installation of new wet wells and associated equipment and site improvements including fencing and maintenance road.				
Project Cost	$4,969,003.75		Date Project	6/2024-6/2026	
Key Project Personnel	Project Manager	Project Superintendent	Safety Manager	Quality Control Manager	
Name	Paul Johnson	David Syme	Paul Johnson	David Syme	
Reference Contact Information (listing names indicates approval to contacting the names individuals as a reference)					
	Name	Title/Position	Organization	Telephone	Email
Owner	Gwen Rowitsch	Public Works Director	City of Prescott	(928) 777-1130	gwen.rowitsch@prescott-az.gov
Designer	Rob Bryant	Lead Engineer, PE	Water Works Engineers	(480) 744-0636	robb@wwengineers.com
Construction Manager	David Bradley	Capital Projects Manager	City of Prescott	(928) 777-1130	david.bradley@prescott-az.gov

Project Owner	Lake Havasu City		Project Name	Installation of UV Disinfection Assemblies at Mulberry WWTP	
General Description of Project	Remove existing assemblies, install City-purchased equipment, including all electrical and controls.				
Project Cost	$86,679.00		Date Project	5/2026-6/2026	
Key Project Personnel	Project Manager	Project Superintendent	Safety Manager	Quality Control Manager	
Name	Ryan Shy	Ryan Shy	Paul Johnson	Michael Young	
Reference Contact Information (listing names indicates approval to contacting the names individuals as a reference)					
	Name	Title/Position	Organization	Telephone	Email
Owner	Jason Hart	Capital Program Manager	Lake Havasu City	(928) 854-0789	hartj@lhcaz.gov
Designer	N/A - Equip Manufacturer				
Construction Manager	Keith Lueken	Wastewater Supervisor	Lake Havasu City	(928) 855-3999	luekenk@lhcaz.gov

Project Owner	City of Prescott		Project Name	Sundog WWTP Facility Repairs/Improvements	
General Description of Project	Repairs and improvements at WWTP including clarifier, new mechanical bar screen, motorized plug valve, wet well float switch				
Project Cost	$601,301.00		Date Project	6/2026-8/2026	
Key Project Personnel	Project Manager	Project Superintendent	Safety Manager	Quality Control Manager	
Name	Michael Young	Robert Kinkade	Paul Johnson	Michael Young	
Reference Contact Information (listing names indicates approval to contacting the names individuals as a reference)					
	Name	Title/Position	Organization	Telephone	Email
Owner	Scott Bell	WW Operations Supervisor	City of Prescott	(928) 777-1630	scott.bell@prescott-az.gov
Designer	N/A - Equip Manufacturer				
Construction Manager	Will Bodine	Wastewater Super	City of Prescott	(928) 710-6455	william.bodine@prescott-az.gov

Copyright© 2018 National Society of Professional Engineers, American Council of Engineering Companies, and American Society of Civil Engineers. All rights reserved.

Schedule A—Current Projects Page 2

Name of Organization	Fann Environmental, LLC				
Project Owner	City of Sedona		Project Name	Secondary Clarifier Rehabilitation	
General Description of Project	Furnish and install 2 circular segmented scraper cage drive clarifiers for WWTP				
Project Cost	$748,744.00		Date Project	4/2026-8/2027 (long lead equipment)	
Key Project Personnel	Project Manager	Project Superintendent	Safety Manager	Quality Control Manager	
Name	Michael Young	David Syme	Paul Johnson	Michael Young	
Reference Contact Information (listing names indicates approval to contacting the names individuals as a reference)					
	Name	Title/Position	Organization	Telephone	Email
Owner	Roxanne Holland	Director of Wastewater	City of Sedona	(928) 203-5069	rholland@sedonaaz.gov
Designer	Adrian Williams	Engineer	WesTech Engineering	(801) 290-6403	awilliams@westechwater.com
Construction Manager	Dan Thurston	Wastewater PM/Eng	City of Sedona	(928) 203-5183	dthurston@sedonaaz.gov

Project Owner	Yavapai College		Project Name	Prescott Pines Well Water Supply Improvements	
General Description of Project	Furnish and install 50k gal bolted steel water storage tank and booster pump station to augment use of existing well				
Project Cost	$349,518.00		Date Project	7/2025-7/2027	
Key Project Personnel	Project Manager	Project Superintendent	Safety Manager	Quality Control Manager	
Name	Michael Young	TBD (Design Phase)	Paul Johnson	Michael Young	
Reference Contact Information (listing names indicates approval to contacting the names individuals as a reference)					
	Name	Title/Position	Organization	Telephone	Email
Owner	Ed Lacasse	Dir of Procurement	Yavapai College	(928) 776-2190	ed.lacasse@yc.edu
Designer					
Construction Manager	James Crockett	Facilities Director	Yavapai College	(928) 717-7641	james.crockett@yc.edu

Project Owner	Department of Veterans Affairs		Project Name	Install Elevators and Complete Space Buildout for B162 & B164	
General Description of Project	Install power to new elevator room, shunt trip for elevator, disconnects for cab lighting and controls, receptacles and switches				
Project Cost	$170,277.00		Date Project	4/2025-8/2026	
Key Project Personnel	Project Manager	Project Superintendent	Safety Manager	Quality Control Manager	
Name	Steve Myers	Steve Myers	Steve Myers	Steve Myers	
Reference Contact Information (listing names indicates approval to contacting the names individuals as a reference)					
	Name	Title/Position	Organization	Telephone	Email
Owner					
Designer			AESUS Design Group		
Construction Manager	John Crofoot	Project Superintendent	The Povolny Group	(509) 991-8538	jcrofoot@povolnygroup.com

Copyright© 2018 National Society of Professional Engineers, American Council of Engineering Companies, and American Society of Civil Engineers. All rights reserved.

Schedule B—Previous Experience with Similar Projects

Name of Organization	Fann Environmental, LLC				
Project Owner	Fort Mohave Tribal Utility Authority		Project Name	Clarifier Scum Baffle Replacement	
General Description of Project	Remove existing aluminum scum baffle and replace with new owner-provided equipment.				
Project Cost	$56,000.00		Date Project	6/2025	
Key Project Personnel	Project Manager	Project Superintendent	Safety Manager	Quality Control Manager	
Name	Michael Young	Robert Kinkade	Robert Kinkade	Robert Kinkade	
Reference Contact Information (listing names indicates approval to contacting the names individuals as a reference)					
	Name	Title/Position	Organization	Telephone	Email
Owner	John DeOcampo	Operations Manager	Fort Mohave TUA	(928) 768-1500	jdeocampo@fmtua.com
Designer	N/A Equip Manufacturer				
Construction Manager	Same as Owner				

Project Owner	Town of Prescott Valley		Project Name	Village Way Lift Station	
General Description of Project	Development of lift station site to include site improvements, wet well, vaults, pumps, grinder, mech & electrical systems				
Project Cost	$2,722,262.62		Date Project	10/2023-4/2025	
Key Project Personnel	Project Manager	Project Superintendent	Safety Manager	Quality Control Manager	
Name	Paul Johnson	David Syme	Paul Johnson	David Syme	
Reference Contact Information (listing names indicates approval to contacting the names individuals as a reference)					
	Name	Title/Position	Organization	Telephone	Email
Owner	Lisa Vaughan	Engineer, Utilities	Town of Prescott Valley	(928) 759-5506	lvaughan@prescottvalley-az.gov
Designer	Stefan Gustafsson	Asst Project Manager	Colliers Eng & Design	(602) 490-0535	stefan.gustafsson@collierseng.com
Construction Manager	Ed Shipley	Project Manager	Cavan Companies	(602) 490-0535	eshipley@cavancompanies.com

Project Owner	City of Cottonwood		Project Name	Rebuild Sand Filters with Skimmers	
General Description of Project	Rebuild of two 16' x 30' ABF sand filters with 8" cells with a skimmer on each at Cottonwood WWTP				
Project Cost	$451,649.00		Date Project	11/2023	
Key Project Personnel	Project Manager	Project Superintendent	Safety Manager	Quality Control Manager	
Name	Michael Young	Michael Young	Michael Young	Michael Young	
Reference Contact Information (listing names indicates approval to contacting the names individuals as a reference)					
	Name	Title/Position	Organization	Telephone	Email
Owner	Russell Freye	Utility Engineer	City of Cottonwood	(928) 340-2735	rfreye@cottonwoodaz.gov
Designer	Shawn Butterfield	Project Manager	Aqua-Aerobic Systems	(815) 639-4490	sbutterfield@aqua-aerobic.com
Construction Manager	Mathew Westcott	Wastewater Supervisor	City of Cottonwood	(928) 340-2196	mwestcott@cottonwoodaz.gov

Copyright© 2018 National Society of Professional Engineers, American Council of Engineering Companies, and American Society of Civil Engineers. All rights reserved.

Schedule B—Previous Experience with Similar Projects

Name of Organization	Fann Environmental, LLC			
Project Owner	City of Prescott	Project Name	Traveling Bridge Sand Filter Rehabilitation	
General Description of Project	Rebuild of underdrains of two 16' x 66' ABF sand filters with 12" cells and 22" media at Sundog WWTP			
Project Cost	$633,517.00	Date Project	2/2024-8/2024	
Key Project Personnel	Project Manager	Project Superintendent	Safety Manager	Quality Control Manager
Name	Michael Young	Michael Young	Michael Young	Michael Young

Reference Contact Information (listing names indicates approval to contacting the names individuals as a reference)

	Name	Title/Position	Organization	Telephone	Email
Owner	Gwen Rowitsch	Public Works Director	City of Prescott	(928) 777-1130	gwen.rowitsch@prescott-az.gov
Designer	Shawn Butterfield	Project Manager	Aqua-Aerobic Systems	(815) 639-4490	sbutterfield@aqua-aerobic.com
Construction Manager	Scott Gregorio (Retired)	Wastewater Super	City of Prescott		

Project Owner	Town of Clarkdale	Project Name	Backwash Lift Station Replacement	
General Description of Project	Install fiberglass lift station and 6' wet well w/ pumps, instruments/controls/electrical, pipe and appurtenance to tie in to existing			
Project Cost	$205,882.00	Date Project	11/2023	
Key Project Personnel	Project Manager	Project Superintendent	Safety Manager	Quality Control Manager
Name	Michael Young	David Syme / Ryan Shy (Elect)	Paul Johnson	David Syme

Reference Contact Information (listing names indicates approval to contacting the names individuals as a reference)

	Name	Title/Position	Organization	Telephone	Email
Owner	Lisa Waldschmidt	Water Resource Manager	Town of Clarkdale	(928) 202-2152	lisawaldschmidt@clarkdale.az.gov
Designer	N/A				
Construction Manager	N/A				

Project Owner		Project Name		
General Description of Project				
Project Cost		Date Project		
Key Project Personnel	Project Manager	Project Superintendent	Safety Manager	Quality Control Manager
Name				

Reference Contact Information (listing names indicates approval to contacting the names individuals as a reference)

	Name	Title/Position	Organization	Telephone	Email
Owner					
Designer					
Construction Manager					

Copyright© 2018 National Society of Professional Engineers, American Council of Engineering Companies, and American Society of Civil Engineers. All rights reserved.

Schedule C—Key Individuals

Project Manager			
Name of individual		Paul Johnson	
Years of experience as project manager		30+	
Years of experience with this organization		6.5	
Number of similar projects as project manager		8	
Number of similar projects in other positions			
Current Project Assignments			
Name of assignment		Percent of time used for this project	Estimated project completion date
Yavapai Hills #1 Lift Station Rehab		10%	6/2026
Reference Contact Information (listing names indicates approval to contact named individuals as a reference)			
Name	Scott McClinton	Name	Jesse Roybal
Title/Position	Capital Projects Manager	Title/Position	Water Division Supervisor
Organization	City of Prescott	Organization	Mohave County
Telephone	(928) 777-1130	Telephone	(928) 757- 0910
Email	scott.mcclinton@prescott-az.gov	Email	roybaj@mohave.gov
Project	Water Production Facility	Project	GVID Well 2/5 Construction
Candidate's role on project	Project Manager	Candidate's role on project	Project Manager

Project Superintendent			
Name of individual		David Syme	
Years of experience as project superintendent		30+	
Years of experience with this organization		7.5	
Number of similar projects as project superintendent		See years of experience, difficult to quantify	
Number of similar projects in other positions		See years of experience	
Current Project Assignments			
Name of assignment		Percent of time used for this project	Estimated project completion date
Yavapai Hills #1 Lift Station Rehab		5%	6/2026
Prescott Pines Well Water Supply Improvements		10%	7/2027
Reference Contact Information (listing names indicates approval to contact named individuals as a reference)			
Name	David Bradley	Name	Scott McClinton
Title/Position	Capital Projects Manager	Title/Position	Capital Projects Manager
Organization	City of Prescott	Organization	City of Prescott
Telephone	(928) 777-1130	Telephone	(928) 777-1130
Email	david.bradley@prescott-az.gov	Email	scott.mcclinton@prescott-az.gov
Project	Yavapai Hills LS#1 & Zone 7 Improvements	Project	Water Production Facility & Interm. Pump Stn.
Candidate's role on project	Project Superintendent	Candidate's role on project	Project Superintendent

Copyright© 2018 National Society of Professional Engineers, American Council of Engineering Companies, and American Society of Civil Engineers. All rights reserved.

Safety Manager			
Name of individual		Paul Johnson	
Years of experience as ~~project~~ manager (safety)		30+	
Years of experience with this organization		6.5	
Number of similar projects as ~~project~~ manager (safety)		Mr. Johnson is safety manager on nearly all FE projects	
Number of similar projects in other positions			
Current Project Assignments			
Name of assignment		Percent of time used for this project	Estimated project completion date
Occasional safety site visits for all projects			
Reference Contact Information (listing names indicates approval to contact named individuals as a reference)			
Name	See references under PM	Name	See references under PM
Title/Position		Title/Position	
Organization		Organization	
Telephone		Telephone	
Email		Email	
Project		Project	
Candidate's role on project		Candidate's role on project	

Quality Control Manager			
Name of individual		Michael Young	
Years of experience as ~~project superintendent~~ (QC)		22	
Years of experience with this organization		22 (45+ years experience in water/wastewater)	
Number of similar projects as ~~project superintendent~~ (QC)		As president of FE, Mike is involved in all projects to ensure they meet client and company standards	
Number of similar projects in other positions			
Current Project Assignments			
Name of assignment		Percent of time used for this project	Estimated project completion date
Sundog WWTP Facility Repairs/Improvements		5%	8/2026
Prescott Pines Water Well Improvements		10%	7/2027
Reference Contact Information (listing names indicates approval to contact named individuals as a reference)			
Name	Matthew Wood	Name	Scott McClinton
Title/Position	Utility Engineer	Title/Position	Capital Projects Manager
Organization	Page Utility Enterprises	Organization	City of Prescott
Telephone	(928) 645-2419	Telephone	(928) 777-1130
Email	mwood@pageutility.com	Email	scott.mcclinton@prescott-az.gov
Project	Multiple JOC projects over past 15 yrs	Project	Water Production Fac & Inter. Pump Stn.
Candidate's role on project	Project Manager/QC	Candidate's role on project	Project Executive

Copyright© 2018 National Society of Professional Engineers, American Council of Engineering Companies, and American Society of Civil Engineers. All rights reserved.

Michael S. Young
President

Summary of Experience

Mr. Young has 50 years of professional experience specializing in various aspects of water treatment and distribution, wastewater treatment and collection, effluent reuse and delivery methods hazardous materials and landfills. Mr. Young has extensive knowledge in the design, construction, operation and management of both water and wastewater facilities, development of capital improvement projects, and management of municipal utilities.

As the president of Fann Environmental, Mike is responsible for day-to-day business management, financial oversight, public relations and marketing. He provides hands-on project management, consulting, system troubleshooting, operator training, and new system start-up and commissioning.

Certifications

- Grade Four Water Distribution Operator Certification
- Grade Four Water Treatment Operator Certification
- Grade One Wastewater Treatment Operator Certification
- Grade Two Wastewater Collection Operator Certification

Education and Training

- Pump and Well Design Studies, University of California at Davis
- Water and Wastewater Utilities Management, Michigan State University
- Numerous community college courses in water and wastewater
- Ongoing continuing education and professional development training for Operator Certification
- Numerous seminars in supervisory, management, and computer skills

Professional Experience

2003 - Present · Fann Environmental, LLC

President, Project Manager

Relevant Projects

- CMAR City of Prescott Water Production and Intermediate Pump Stations
- Design-Build City of Prescott Chino Production Well Rehabilitation Program
- City of Page Job Order Contract Projects
- Various Navajo Tribal Utility Authority Projects
- Arizona Water Company Water Treatment Systems throughout Arizona

Consultant

- Municipal projects
- Water and wastewater system troubleshooting
- Overall utilities management
- ADEQ systems evaluations and technical assistance

Michael S. Young Professional Experience continued

1986 - 2003 · City of Prescott, Prescott AZ

Water Plant Operator

Water Production Foreman

Utilities Superintendent - Water and Wastewater Collections

Water Production Superintendent

As the Utilities and Water Superintendent, Mike was responsible for the entire water system that included 5 water production wells, one effluent recovery well, eight monitoring wells, 35 booster stations, 30 storage reservoirs and tanks, pumping facilities from fractional to 1000 horsepower, Chino Valley Well Field and high pressure booster station, over 80 pressure reducing stations, hundreds of miles of distribution and transmission mains from 2-inch to 36-inch. He was also involved in all water-related capital improvement projects, from the construction of storage reservoirs to design, build and operation of booster facilities.

1985 – 1988 · Hydro-Technology, Prescott AZ

Owner/Consultant

Water Production Foreman

As a water consulting business owner, Mike performed consulting services for numerous engineering firms and various private and public community water systems throughout Arizona. He participated in the design of a new production well facility for the City of Flagstaff and also provided over eight years of service to the City of Williams for troubleshooting their surface water treatment plant. He also provided consulting services for the Town of Show Low.

1978 - 1982 · Montecito Water District, Montecito CA

Water Treatment Supervisor

Water Operations and Maintenance Superintendent

As the water operations and maintenance superintendent, Mike was responsible for the operation and maintenance of the water system and was directly involved in a very extensive ground water basin study. During this time, pump testing was performed on over 25 wells with the drawdown and revolver being monitored closely on observation wells within the surrounding areas. During his tenure he attended the University of California at Davis where he studied well and pump design and completed a course through Michigan State University on supervision and management in the water/wastewater industry.

1975 – 1978 · Cachuma Operations and Maintenance Board, Santa Barbara CA

System Operator

As the system operator, Mike was responsible for controlling water flows up to 75 cos through the Tecolate Tunnel to maintain reservoir levels along the south coast from Goleta to Carpinteria, California. His responsibilities included coordinating with each water district and community starting with Goleta, Santa Barbara, Montecito, Summerland and Carpenter to meet their anticipated water demands. Other responsibilities included water quality sampling and field analysis to determine the level of the highest quality lake water and adjust the intake accordingly.

Paul Johnson

Operations Direct/Project Manager/Safety Manager

Summary of Experience

Mr. Johnson has over 30 years of professional experience in construction management and field operations. Paul is responsible for sourcing, hiring and scheduling of personnel. He collaborates with the superintendents, owners, subcontractors and suppliers to ensure that projects are being completed on time and within budget. Mr. Johnson maintains the company safety program working closely with employees and subcontractors to keep job sites in compliance and promoting a healthy safety culture. He is involved in estimating and bidding on negotiated and hard bid projects as well. Paul also manages the documentation of all of our current projects' progress on Procore construction software.

Certifications and Accreditations

- ASHE Health Care Construction Certificate
- OSHA 30
- University of Minnesota Storm Water Pollution Prevention Program (SWPPP)
- Procore Administration
- Dale Carnegie's Manager's Guide to Sustainable Employee Engagement completed

Professional Experience

2019 - Present · Fann Environmental, LLC

Project Manager and Operations Director

Relevant Projects

- Yavapai Hills Lift Station #1 Rehabilitation
- Village Way Lift Station
- CMAR City of Prescott Water Production Facility
- Ash Fork Water Infrastructure Improvements
- Arizona Water Company Mogollon Well No 3 Arsenic Treatment Facility
- Oak Creek Water District Arsenic Removal Systems and Tank Repairs
- City of Prescott Chino Production Well 3 Rehab
- City of Prescott Zone 56 Tank and Zone 7 Improvements

2014 - 2019 · Midwest Construction Group, Fargo ND

Director of Field Operations/PM/Safety Director

As Director of Field Operations, Paul was responsible for all aspects of the day to day operations including creating and maintaining construction budgets with a scope of up to $17 million. He sourced and hired superintendents and field personnel, trained and mentored new hires and assisted with the setting of goals/expectations and annual performance reviews. As the Safety Director, Paul maintained an effective safety program with a <.75 EMR for the division working closely with employees and subcontractors to keep job sites in compliance and promote a healthy safety culture. As a Project Manager, Paul participated in estimating and bidding negotiated and hard bid projects, managed projects utilizing Procore software, and created and in-house scope exhibits for contracts using AIA software.

Paul Johnson Professional Experience continued

2002 - 2013 · Nor-Son Inc., Baxter MN

Superintendent / Construction Manager

Paul had a full range of responsibilities associated with large commercial construction project management in this position. He field managed projects for Merit Health Care System (now Sanford Health) including being the Construction Manager for a $65 million addition on a hospital campus in downtown Fargo, ND. The project included a new Heart Center with a 4-suite cardiac catheter unit with emergency OR suite, remodeling and expansion of the Roger Maris Cancer Center, and a new parking structure. Paul also managed the remodeling of rural hospitals and clinics, and Hotel/Casino refacing and remodels in MN.

1999 – 2002 · Triebwasser, Helenske and Associates (now Helenske Design Group), Fargo ND

Construction Manager

As Construction Manager, Paul oversaw various projects mostly for the Minnesota State Colleges and University System at the Thief River Falls MN campus. Projects were phased, multi-million dollar contracts. His responsibilities included estimating for architectural staff, designing development budgets, marketing, and public relations.

1991-1999 · Stamson and Blair, Inc., Grand Rapids MN

Project Superintendent

This was Paul's first experience with commercial construction and full time Superintendent duties. He was responsible for daily jobsite operations and implementation of plans and specifications, coordination and scheduling of crews and subcontractors, supplies and equipment, and stringent quality control. He also managed communications between owners, architects, and engineers.

David "Bim" Syme
General Superintendent

Summary of Experience

Mr. Syme has also been working in the industry for over 40 years specializing in underground utilities, roadway construction, and project development, the last five years with Fann Environmental. Before joining FE, Bim had taken part in over 300 public and private projects ranging from $20,000 to $16 million plus throughout Arizona, Utah, and Wyoming. Bim is responsible for overseeing the operations of active projects, developing and overseeing the crews, managing the materials and equipment needed to complete projects and directing crews to keep projects within scope, time frame, and budget. Bim is well-respected within the construction community and has an extensive network of contacts in the industry and related utilities.

Certifications and Training

- OSHA 10
- NUCA Competent Person
- Competent Person Excavation, Trenching, Confined Space
- Storm Water Pollution Prevention Program (SWPPP)
- Forklift and Aerial Work Platform Training
- First Aid/CPR

Professional Experience

2019 - Present · Fann Environmental, LLC

General Superintendent

Relevant Projects

- Yavapai Hills #1 Lift Station Rehabilitation
- CMAR City of Prescott Intermediate Pump Stations
- Village Way Lift Station
- City of Prescott Zone 56 Tank and Zone 7 Improvements
- Arizona Water Company Mogollon Well No 3 Arsenic Treatment Facility

2013 - 2019 & 1984 - 2011 · Johansen Construction Inc., Mt. Pleasant UT

Arizona Branch Manager/Project Manager

- Specialized in underground pipeline construction for private and public contracts
- Worked over 300 jobs ranging from $20,000 to $16 million+ in Arizona, Utah, Wyoming
- Business development through competitive bidding, conducting weekly oral progress meetings with owners and employees/subcontractors, creating and managing production schedules for job projections, maintaining records of equipment use, safety training, weekly safety meetings, material costs, billing and labor schedules.

2011 - 2013 · West African Heavy Equipment Ltd / Bodie Machine and Metal Works LLC, Ghana, Africa

Operations Manager

Originally hired to manage rental of heavy machinery, but role transitioned to procuring, establishing and leading the company's overall gold mining operation including managing staff of over 135 Ghanaians and Americans, managing use and maintenance of 50 pieces of heavy equipment, overseeing product refinement and security and interacting and negotiating with local chiefs and commissioners.

Robert Kinkade

Ryan Shy
Electrical Department Manager/Superintendent

Summary of Experience

Mr. Shy has nearly 25 years of experience in the construction field. Ryan successfully completed the Arizona Statutes and Rules Training Course and Exam for Contractor Licensing and AZ CR-11 Electrical Licensing Exam. He began as a laborer and quickly worked his way up to journeyman and administrative level positions. Ryan has supervised both piping and electrical work as well as the work of subcontractors on Fann Environmental projects. His projects are consistently completed on time and within budget. Ryan has worked extensively with Arizona Public Service in coordination of providing new electrical service to several City of Prescott treatment facilities. He is often the first person clients call when they have an electrical emergency because they know he will be responsive and be able to make the repairs needed to get them back on track.

Certifications and Accreditations

- Arizona Registrar of Contractors CR-11 Contractors License
- 40 Hour EM385 Hazard Recognition
- Competent Person Excavation, Confined Space
- Forklift and Aerial Operator Safety
- MSHA 8 hour

Education

- Independent Electrical Contractors Association 4-year, 8,000 hour Apprenticeship Program

Professional Experience

2018 – Present · Fann Environmental, LLC

Electrical Department Manager Superintendent

Relevant Projects

- City of Prescott Water Production Facility and Intermediate Pump Stations
- Oak Creek Water District Arsenic Removal Systems and Tank Repairs
- City of Prescott Airport Well No 5 Improvements
- City of Prescott Zone 16 Tank, Pump Station, and Water Main
- Arizona Water Company Santiago Trail Nitrate Removal, Booster Station and Storage Tank

2015 – 2018 · LPC Construction, Yuma AZ

Project Superintendent

Duties included Estimating projects, reviewing submittals, plans, and specifications, building project schedules and ensuring subcontractors are adhering to plans, specifications and schedules, coordinating materials and subcontractor work, conducting weekly progress and safety meetings.

1999-2015 · Westmoor Electric, Yuma AZ

Laborer through Project Manager

Duties included installing conduit per plans, specifications and national electrical code, pulling and terminating wire for complete electrical system, laying out and coordinating electrical systems with other trades, operating backhoe, forklift, scissor lifts and boom lifts, overseeing electrical apprentices and laborers, communicating with engineers and owners on project issues.

FANN Environmental, LLC
One Stop Environmental Solutions
6708 Corsair Ave., Suite A • Prescott, AZ 86301 • Phone: 928-778-5335 • Fax: 928-778-5870 • ROC-A-206365 • ROC B-249529

List of Proposed Subcontractors

J Co Contracting LLC PO Box 3787 Prescott AZ 86302 AZROC 239181 KB-1	Concrete
Field Lining Systems Inc 439 S 3rd Avenue Avondale AZ 85323 AZROC 090068 CR-5	Liner Installation
Mammoth Tech LLC 1020 M Main St Cottonwood AZ 86326 AZROC 342200	Welding/Fabrication
Granite Basin Engineering 1981 Commerce Center Cir Prescott AZ 86301	Survey
CMT Technical Services 2355 N Steves Blvd Ste B Flagstaff AZ 86004	Materials Testing & Special Inspections

FANN Environmental, LLC
One Stop Environmental Solutions
6708 Corsair Ave., Suite A • Prescott, AZ 86301 • Phone: 928-778-5335 • Fax: 928-778-5870 • ROC-A-206365 • ROC B-249529

LLC Resolution of Signing Authority

WHEREAS, the Company is determined to grant signing and authority to certain persons described hereunder.

RESOLVED, that the Members are hereby authorized and approved to authorize and empower the following individual to make, execute, endorse and deliver in the name of and on behalf of the company, but shall not be limited to, any and all written instruments, agreements, documents, execution of deeds, powers of attorney, transfers, assignments, contracts, obligations, certificates, banking agreements and other instruments of whatever nature entered into by this Company.

Name: Michael S Young

Position/Title: Operating Member

Telephone Number: 928-713-9265

Email Address: mikeyoung@fannenvironmental.com

Signature: _____ 4/16/2025

Name: Michael W Fann

Position/Title: Majority Member

Telephone Number: 928-713-3286

Email Address: mfann@fanncontracting.com

Signature: _____ 4/16/2025

Continuation of *LLC Resolution of Signing Authority*

The undersigned hereby certify that they are the members of Fann Environmental, LLC on the date signed and that they agree to the resolution above:

Michael W. Fann _____ 4/16/2025

Michael S. Young, Sr. _____ 4/16/2025

Laurie L. Young _____ 05/07/25

Linda O'Brien _____ _____

Dan Lee _____ _____

Gary D. Steinmetz _____ _____

Continuation of *LLC Resolution of Signing Authority*

The undersigned hereby certify that they are the members of Fann Environmental, LLC on the date signed and that they agree to the resolution above:

Michael W. Fann _____ 4/16/2025

Michael S. Young, Sr. _____ 4/16/2025

Laurie L. Young _____ _____

Linda O'Brien _____ 5/21/2025

Dan Lee _____ 5/21/2025

Gary D. Steinmetz _____ 4-14-25

Business Search

Back

Business Name
FANN ENVIRONMENTAL, LLC

Business Type
Domestic Limited Liability Company

Business ID
L11594778

Business Status
Active

State of Formation/Jurisdiction

Principal Office Address
6708 Corsair Avenue, Suite A, PRESCOTT, AZ, Yavapai, 86301, United States

Mailing Address
-

Reason for Status
In Good Standing

Date of Formation
10/22/2004

Status Date
-

Management Structure
Member Managed

Period of Duration
Perpetual

Character of Business

-

Statutory Agent Information

Agent Type
Individual

Agent Name
LINDA O'BRIEN

Status
Active

Physical Address Attention
-

Statutory Agent Address (Physical Address)
6708 Corsair Avenue, Suite A, PRESCOTT, AZ, Yavapai, 86301, United States

Mailing Address Attention
-

Mailing Address
6708 Corsair Avenue, Suite A, PRESCOTT, AZ, Yavapai, 86301, United States

Effective Date
-

Principals Information (6)

Title	Principal Type	Name	Attention	Address	Mailing Address	Date Taking Office	Term of Office
Member	Individual	GARY D STEINMETZ	-	PO BOX 1925, CHINO VALLEY, AZ, 86314, United States	-	11/2011	-
Member	Individual	LINDA OBRIEN	-	PO BOX 3958, PRESCOTT, AZ, 86302, United States	-	10/2004	-
Member	Individual	DAN LEE	-	PO BOX 3958, PRESCOTT, AZ, 86302, United States	-	10/2004	-
Member	Individual	MICHAEL W FANN	-	PO BOX 4356, PRESCOTT, AZ, 86302, United States	-	10/2004	-
Member	Individual	LAURIE L YOUNG	-	13398 E REMINGTON RD, PRESCOTT VALLEY, AZ, 86314, United States	-	10/2004	-
Member	Individual	MICHAEL S YOUNG SR	-	13398 E REMINGTON RD, PRESCOTT VALLEY, AZ, 86314, United States	-	10/2004	-

Items per page: 10 1 – 6 of 6

Filing History | Name History | Stat. Agent History | Service History | Restructuring History | Microfilm History

Filing Number	Filing Date/Time	Effective Date	Filing Type	Filing Status	View Document
25011508382680	02/03/2025 11:53 AM	01/13/2025	Statement of Change - LLC Principal Address/Stat Agent	Approved	
03663301	11/04/2011 12:00 AM	11/07/2011	Articles of Amendment - LLC	Approved	
01083338	12/15/2004 12:00 AM	12/18/2004	Affidavit of Publication	Approved	
01046119	10/22/2004 12:00 AM	10/25/2004	Articles of Organization	Approved	

-------- IMPORTANT NOTICE --------
YOU MUST:

1. REPORT DISASSOCIATION OF QUALIFYING PARTY **IN WRITING** WITHIN 15 DAYS. [SEE A.R.S. § 32-1154(A)(18)]
2. REPORT A CHANGE OF ADDRESS **IN WRITING** WITHIN 30 DAYS. [SEE A.R.S § 32-1122(8)(1)]
3. REPORT ANY TRANSFER OF OWNERSHIP OF 25% OR MORE IMMEDIATELY [SEE A.R.S. § 32-1151.01]
4. REPORT ANY CHANGE IN LEGAL ENTITY, SUCH AS ANY CHANGE IN OWNERSHIP IN A SOLE PROPRIETORSHIP OR CHANGE OF A PARTNER IN A PARTNERSHIP OR THE CREATION OF A NEW CORPORATE ENTITY [SEE A.R.S § 32-1124(8)(F) § RULE R-4-9-110]

THIS IS YOUR IDENTIFICATION CARD

Licensee: **Fann Environmental LLC**

6708 Corsair Avenue, Suite A Prescott, AZ 86301, Prescott, AZ 86301

License No.: **ROC 206365**
Class: **A General Engineering**
License Effective Through: **2027-04-30**

ROC 206365

TOM COLE, DIRECTOR

State of Arizona Registrar of Contractors

Visit our license listing on the Registrar of Contractors Contractor Search using the QR Code to the right.

ROC 206365

STATE OF ARIZONA

License No. ROC 206365

Office of the
Registrar of Contractors

This is to certify that:

Fann Environmental LLC

DBA (if any)

Having been shown to possess all the necessary qualifications, and having complied with all the requirements of the law is by order of the Registrar of Contractors duly licensed and admitted to engage in and pursue the business of

A General Engineering

Contractor in the State of Arizona. Given my hand and the seal of the Registrar of Contractors in my office, City of Phoenix, on 2005-04-25

ROC 206365

Arizona Registrar of Contractors • 1931 •

TOM COLE, DIRECTOR,
ARIZONA REGISTRAR OF CONTRACTORS

-------- IMPORTANT NOTICE --------
YOU MUST:

1. REPORT DISASSOCIATION OF QUALIFYING PARTY **IN WRITING** WITHIN 15 DAYS. [SEE A.R.S. § 32-1154(A)(18)]
2. REPORT A CHANGE OF ADDRESS **IN WRITING** WITHIN 30 DAYS. [SEE A.R.S § 32-1122(8)(1)]
3. REPORT ANY TRANSFER OF OWNERSHIP OF 25% OR MORE IMMEDIATELY [SEE A.R.S. § 32-1151.01]
4. REPORT ANY CHANGE IN LEGAL ENTITY, SUCH AS ANY CHANGE IN OWNERSHIP IN A SOLE PROPRIETORSHIP OR CHANGE OF A PARTNER IN A PARTNERSHIP OR THE CREATION OF A NEW CORPORATE ENTITY [SEE A.R.S § 32-1124(8)(F) § RULE R-4-9-110]

THIS IS YOUR IDENTIFICATION CARD

Licensee: **Fann Environmental LLC**

6708 Corsair Ave Ste A, Prescott, AZ 86301

License No.: **ROC 249529**
Class: **B-1 General Commercial Contractor**
License Effective Through: **2026-09-30**

ROC 249529

TOM COLE, DIRECTOR

State of Arizona Registrar of Contractors

Visit our license listing on the Registrar of Contractors Contractor Search using the QR Code to the right.

ROC 249529

STATE OF ARIZONA

License No. ROC 249529

Office of the
Registrar of Contractors

This is to certify that:

Fann Environmental LLC

DBA (if any)

Having been shown to possess all the necessary qualifications, and having complied with all the requirements of the law is by order of the Registrar of Contractors duly licensed and admitted to engage in and pursue the business of

B-1 General Commercial Contractor

Contractor in the State of Arizona. Given my hand and the seal of the Registrar of Contractors in my office, City of Phoenix, on 2008-09-26

ROC 249529

Arizona Registrar of Contractors • 1931 •

TOM COLE, DIRECTOR,
ARIZONA REGISTRAR OF CONTRACTORS

-------- IMPORTANT NOTICE --------
YOU MUST:

1. REPORT DISASSOCIATION OF QUALIFYING PARTY **IN WRITING** WITHIN 15 DAYS. [SEE A.R.S. § 32-1154(A)(18)]
2. REPORT A CHANGE OF ADDRESS **IN WRITING** WITHIN 30 DAYS. [SEE A.R.S § 32-1122(8)(1)]
3. REPORT ANY TRANSFER OF OWNERSHIP OF 25% OR MORE IMMEDIATELY [SEE A.R.S. § 32-1151.01]
4. REPORT ANY CHANGE IN LEGAL ENTITY, SUCH AS ANY CHANGE IN OWNERSHIP IN A SOLE PROPRIETORSHIP OR CHANGE OF A PARTNER IN A PARTNERSHIP OR THE CREATION OF A NEW CORPORATE ENTITY [SEE A.R.S § 32-1124(8)(F) § RULE R-4-9-110]

THIS IS YOUR IDENTIFICATION CARD

Licensee: **Fann Environmental LLC**

6708 Corsair Avenue Suite A, Prescott, AZ 86301

License No.: **ROC 276357**
Class: **CR-11 Electrical**
License Effective Through: **2027-12-31**

ROC 276357

TOM COLE, DIRECTOR

State of Arizona Registrar of Contractors

Visit our license listing on the Registrar of Contractors Contractor Search using the QR Code to the right.

ROC 276357

STATE OF ARIZONA

License No. ROC 276357

Office of the
Registrar of Contractors

This is to certify that:

Fann Environmental LLC

DBA (if any)

Having been shown to possess all the necessary qualifications, and having complied with all the requirements of the law is by order of the Registrar of Contractors duly licensed and admitted to engage in and pursue the business of

CR-11 Electrical

Contractor in the State of Arizona. Given my hand and the seal of the Registrar of Contractors in my office, City of Phoenix, on 2011-12-26

ROC 276357

Arizona Registrar of Contractors • 1931 •

TOM COLE, DIRECTOR,
ARIZONA REGISTRAR OF CONTRACTORS

USDA
Form RD 400-6
(Rev. 12-09)

Form Approved
OMB No. 0575-0018

COMPLIANCE STATEMENT

This statement relates to a proposed contract with Town of Jerome

(Name of borrower or grantee)

who expects to finance the contract with assistance from either the Rural Housing Service (RHS), Rural Business-Cooperative Service (RBS), or the Rural Utilities Service (RUS) or their successor agencies, United States Department of Agriculture (whether by a loan, grant, loan insurance, guarantee, or other form of financial assistance). I am the undersigned bidder or prospective contractor, I represent that:

1. I ☒ have ☐ have not, participated in a previous contract or subcontract subject to Executive 11246 (regarding equal employment opportunity) or a preceding similar Executive Order.

2. If I have participated in such a contract or subcontract, I ☒ have, ☐ have not, filed all compliance reports that have been required to file in connection with the contract or subcontract.

☒ If the proposed contract is for $50,000 or more: or ☐ if the proposed nonconstruction contract is for $50,000 or more and I have 50 or more employees, I also represent that:

3. I ☒ have, ☐ have not previously had contracts subject to the written affirmative action programs requirements of the Secretary of Labor.

4. If I have participated in such a contract or subcontract, ☒ I have, ☐ have not developed and placed on file at each establishment affirmative action programs as required by the rules and regulations of the Secretary of Labor.

I understand that if I have failed to file any compliance reports that have been required of me, I am not eligible and will not be eligible to have my bid considered or to enter into the proposed contract unless and until I make an arrangement regarding such reports that is satisfactory to either the RHS, RBS or RUS, or to the office where the reports are required to be filed.

I also certify that I do not maintain or provide for my employees any segregated facilities at any of my establishments, and that I do not permit my employees to perform their services at any location, under my control, where segregated facilities are maintained. I certify further that I will not maintain or provide for my employees any segregated facilities at any of my establishments, and that I will not permit my employees to perform their services at any location, under my control, where segregated facilities are maintained. I agree that a breach of this certification is a violation of the Equal Opportunity clause in my contract. As used in this certification, the term "segregated facilities" means any waiting rooms, work areas, restrooms and wash rooms, restaurants and other eating areas time clocks, locker rooms and other storage or dressing areas, parking lots, drinking fountains, recreation or entertainment areas, transportation, and housing facilities provided for employees which are segregated by explicit directive or are in fact segregated on the basis of race, creed, color, or national origin, because of habit, local custom, or otherwise. I further agree that (except where I have obtained identical certifications for proposed subcontractors for specific time periods) I will obtain identical certifications from proposed subcontractors prior to the award of subcontracts exceeding $10,000 which are not exempt from the provisions of the Equal Opportunity clause; that I will retain such certifications in my files; and that I will forward the following notice to such proposed subcontractors (except where the proposed subcontractors have submitted identical certifications for specific time periods):

According to the Paperwork Reduction Act of 1995, an agency may not conduct or sponsor, and a person is not required to respond to a collection of information unless it displays the valid OMB control number. The valid OMB control number for this information collection is 0575-0018. The time required to complete this information collection is estimated to average 10 minutes per response, including the time for reviewing instructions, searching existing data sources, gathering and maintaining the data needed, and completing and reviewing the collection of information.

NOTICE TO PROSPECTIVE SUBCONTRACTORS OF REQUIREMENTS FOR CERTIFICATIONS OF NON-SEGREGATED FACILITIES

A certification of Nonsegregated Facilities, as required by the May 9, 1967, order (32F.R. 7439, May 19, 1967) on Elimination of Segregated Facilities, by the Secretary of Labor, must be submitted prior to the award of a subcontract exceeding $ 10,000 which is not exempt from the provisions of the Equal Opportunity clause. The certification may be submitted either for each subcontract or for all subcontracts during a period (i.e., quarterly, semiannually, or annually).

NOTE: The penalty for making false statements in offers is prescribed in 18 U.S.C. 1001.

Date 06/03/2026

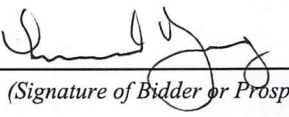

(Signature of Bidder or Prospective Contractor)

6708 Corsair Ave Ste A, Prescott, AZ 86301

Address (including Zip Code)

This form is available electronically.

Form Approved – OMB No. 0505-0027
Expiration Date: 04/30/2022

Certification Regarding Debarment, Suspension, Ineligibility and Voluntary Exclusion Lower Tier Covered Transactions

AD-1048

The following statement is made in accordance with the Privacy Act of 1974 (5 U.S.C. § 552a, as amended). This certification is required by the regulations implementing Executive Order 12549, Debarment and Suspension, and 2 C.F.R. §§ 180.300, 180.335, Participants' responsibilities. The regulations were amended and published on August 31, 2005, in 70 Fed. Reg. 51865-51880. Copies of the regulations may be obtained by contacting the Department of Agriculture agency offering the proposed covered transaction.

According to the Paperwork Reduction Act of 1995 an agency may not conduct or sponsor, and a person is not required to respond to a collection of information unless it displays a valid OMB control number. The valid OMB control number for this information collection is 0505-0027. The time required to complete this information collection is estimated to average 15 minutes per response, including the time for reviewing instructions, searching existing data sources, gathering and maintaining the data needed, and completing and reviewing the collection of information. The provisions of appropriate criminal and civil fraud privacy, and other statutes may be applicable to the information provided.

(Read instructions on page two before completing certification.)

A. The prospective lower tier participant certifies, by submission of this proposal, that neither it nor its principals is presently debarred, suspended, proposed for debarment, declared ineligible, or voluntarily excluded from participation in this transaction by any Federal department or agency;

B. Where the prospective lower tier participant is unable to certify to any of the statements in this certification, such prospective participant shall attach an explanation to this proposal.

ORGANIZATION NAME	PR/AWARD NUMBER OR PROJECT NAME
Fann Environmental, LLC	Jerome Wastewater Treatment Plant Improvements

NAME(S) AND TITLE(S) OF AUTHORIZED REPRESENTATIVE(S)

Michael Young, President

SIGNATURE(S)	DATE
	06/03/2023

In accordance with Federal civil rights law and U.S. Department of Agriculture (USDA) civil rights regulations and policies, the USDA, its agencies, offices, and employees, and institutions participating in or administering USDA programs are prohibited from discriminating based on race, color, national origin, religion, sex, gender identity (including gender expression), sexual orientation, disability, age, marital status, family/parental status, income derived from a public assistance program, political beliefs, or reprisal or retaliation for prior civil rights activity, in any program or activity conducted or funded by USDA (not all bases apply to all programs). Remedies and complaint filing deadlines vary by program or incident.

Persons with disabilities who require alternative means of communication for program information (e.g., Braille, large print, audiotape, American Sign Language, etc.) should contact the responsible agency or USDA's TARGET Center at (202) 720-2600 (voice and TTY) or contact USDA through the Federal Relay Service at (800) 877-8339. Additionally, program information may be made available in languages other than English.

To file a program discrimination complaint, complete the USDA Program Discrimination Complaint Form, AD-3027, found online at How to File a Program Discrimination Complaint (https://www.ascr.usda.gov/filing-program-discrimination-complaint-usda-customer) and at any USDA office or write a letter addressed to USDA and provide in the letter all of the information requested in the form. To request a copy of the complaint form, call (866) 632-9992. Submit your completed form or letter to USDA by: (1) mail: U.S. Department of Agriculture, Office of the Assistant Secretary for Civil Rights, 1400 Independence Avenue, SW, Washington, D.C. 20250-9410; (2) fax: (202) 690-7442.

Instructions for Certification

(1) By signing and submitting this form, the prospective lower tier participant is providing the certification set out on page 1 in accordance with these instructions.

(2) The certification in this clause is a material representation of fact upon which reliance was placed when this transaction was entered into. If it is later determined that the prospective lower tier participant knowingly rendered an erroneous certification, in addition to other remedies available to the Federal Government, the department or agency with which this transaction originated may pursue available remedies, including suspension or debarment.

(3) The prospective lower tier participant shall provide immediate written notice to the person(s) to which this proposal is submitted if at any time the prospective lower tier participant learns that its certification was erroneous when submitted or has become erroneous by reason of changed circumstances.

(4) The terms "covered transaction," "debarred," "suspended," "ineligible," "lower tier covered transaction," "participant," "person," "primary covered transaction," "principal," "proposal," and "voluntarily excluded," as used in this clause, have the meanings set out in the Definitions and Coverage sections of the rules implementing Executive Order 12549, at 2 C.F.R. Parts 180 and 417. You may contact the department or agency to which this proposal is being submitted for assistance in obtaining a copy of those regulations.

(5) The prospective lower tier participant agrees by submitting this form that, should the proposed covered transaction be entered into, it shall not knowingly enter into any lower tier covered transaction with a person who is debarred, suspended, declared ineligible, or voluntarily excluded from participation in this covered transaction, unless authorized by the department or agency with which this transaction originated.

(6) The prospective lower tier participant further agrees by submitting this form that it will include this clause titled "Certification Regarding Debarment, Suspension, Ineligibility and Voluntary Exclusion - Lower Tier Covered Transactions," without modification, in all lower tier covered transactions and in all solicitations for lower tier covered transactions.

(7) A participant in a covered transaction may rely upon a certification of a prospective participant in a lower tier covered transaction that is not debarred, suspended, ineligible, or voluntarily excluded from the covered transaction, unless it knows that the certification is erroneous. A participant may decide the method and frequency by which it determines the eligibility of its principals. Each participant may, but is not required to, check the System for Award Management (SAM) database.

(8) Nothing contained in the foregoing shall be construed to require establishment of a system of records to render in good faith the certification required by this clause. The knowledge and information of a participant is not required to exceed that which is normally possessed by a prudent person in the ordinary course of business dealings.

(9) Except for transactions authorized under paragraph (5) of these instructions, if a participant in a covered transaction knowingly enters into a lower tier covered transaction with a person who is suspended, debarred, ineligible, or voluntarily excluded from participation in this transaction, in addition to other remedies available to the Federal Government, the department or agency with which this transaction originated may pursue available remedies, including suspension and/or debarment.

CERTIFICATION FOR CONTRACTS, GRANTS AND LOANS

The undersigned certifies, to the best of his or her knowledge and belief, that:

1. No Federal appropriated funds have been paid or will be paid, by or on behalf of the undersigned, to any person for influencing or attempting to influence an officer or employee of any agency, a Member of Congress, an officer or employee of Congress, or an employee of a Member of Congress in connection with the awarding of any Federal contract, the making of any Federal grant or Federal loan, and the extension, continuation, renewal, amendment, or modification of any Federal contract, grant or loan.

2. If any funds other than Federal appropriated funds have been paid or will be paid to any person for influencing or attempting to influence an officer or employee of any agency, a Member of Congress, an officer or employee of Congress, or an employee of a Member of Congress in connection with this Federal contract, grant or loan, the undersigned shall complete and submit Standard Form - LLL, "Disclosure of Lobbying Activities," in accordance with its instructions.

3. The undersigned shall require that the language of this certification be included in the award documents for all subawards at all tiers (including contracts, subcontracts, and subgrants under grants and loans) and that all subrecipients shall certify and disclose accordingly.

This certification is a material representation of fact upon which reliance was placed when this transaction was made or entered into. Submission of this certification is a prerequisite for making or entering into this transaction imposed by section 1352, title 31, U.S. Code. Any person who fails to file the required certification shall be subject to a civil penalty of not less than $10,000 and not more than $100,000 for each such failure.

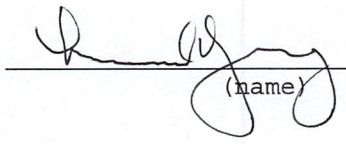

(name)

06/03/2026
(date)

President
(title)

oOo