Project Name: Watermark
Developer Name: Revels Road Investors LLC
210 Hangar Road
Kissimmee, FL 34741
407-870-0066
Owner: Revels Road Investors LLC
210 Hangar Road
Kissimmee, FL 34741
Legal Description: See Attached Survey
Total Acreage: 133.37 +/- Acres
Wetland Acreage: 1.16 +/- Acres
Net Land Area: 132.21 +/- Acres
Owned Land: 131.00 +/- Acres
Vacated ROW: 2.37 +/- Acres
Open Space Required: 33.05 Acres (132.21 x 25%)
Percentage of Uses: 100% Residential
Proposed Land Uses: Single Family Residential
Residential:
Type of Units: Single Family Residential
PUD Number of Units Provided: 290 Lots
Minimum Living Area: 1,600 Square Feet
Maximum Building Height: 35'

Minimum Parking Required: 2 spaces per house
Open Space Provided: 43.95 Acres (33.24%)
Retention Ponds with Amenities: 5.47 Acres
Retention Ponds: 5.07 Acres
Parks: 4.64 Acres
Plazas: None
Buffers: 3.26 Acres
Other Open Areas: 25.51 Acres
Water Retention: +/-10.54 Acres
Public or Civic Space: None
Public Access: Not Gated
Buffers:
Buffer 1: Minimum 15" Width / 6' Wall / 1 Canopy Tree per 50'
Buffer 2: Minimum 15" Width / 1 Canopy Tree per 50'
Buffer 3: Minimum 10' Width / 2 Canopy per 50' / 2 Understory per 50'.
Buffer 4: Minimum 10' Width / 2 Canopy per 50' / 2 Understory per 50'.
Buffer 5: Minimum 10' Width / 2 Canopy per 50' / 2 Understory per 50'.
Buffer 6: Minimum 10' Width / 2 Canopy per 50' / 2 Understory per 50'.
Buffer 7: Adjacent to Wetlands (25' Minimum)
Buffer 8: Minimum 10' Width / 2 Canopy per 50' / 2 Understory per 50'.
Buffer 9: Minimum 10' Width / 2 Canopy per 50' / 2 Understory per 50'.
Water and Sewer: Town of Howey in the Hills
Phase 2 Park to include Pool / Cabana / Tot Lot.

N

Scale: 1"= 150
150 0 150 300
SCALE IN FEET

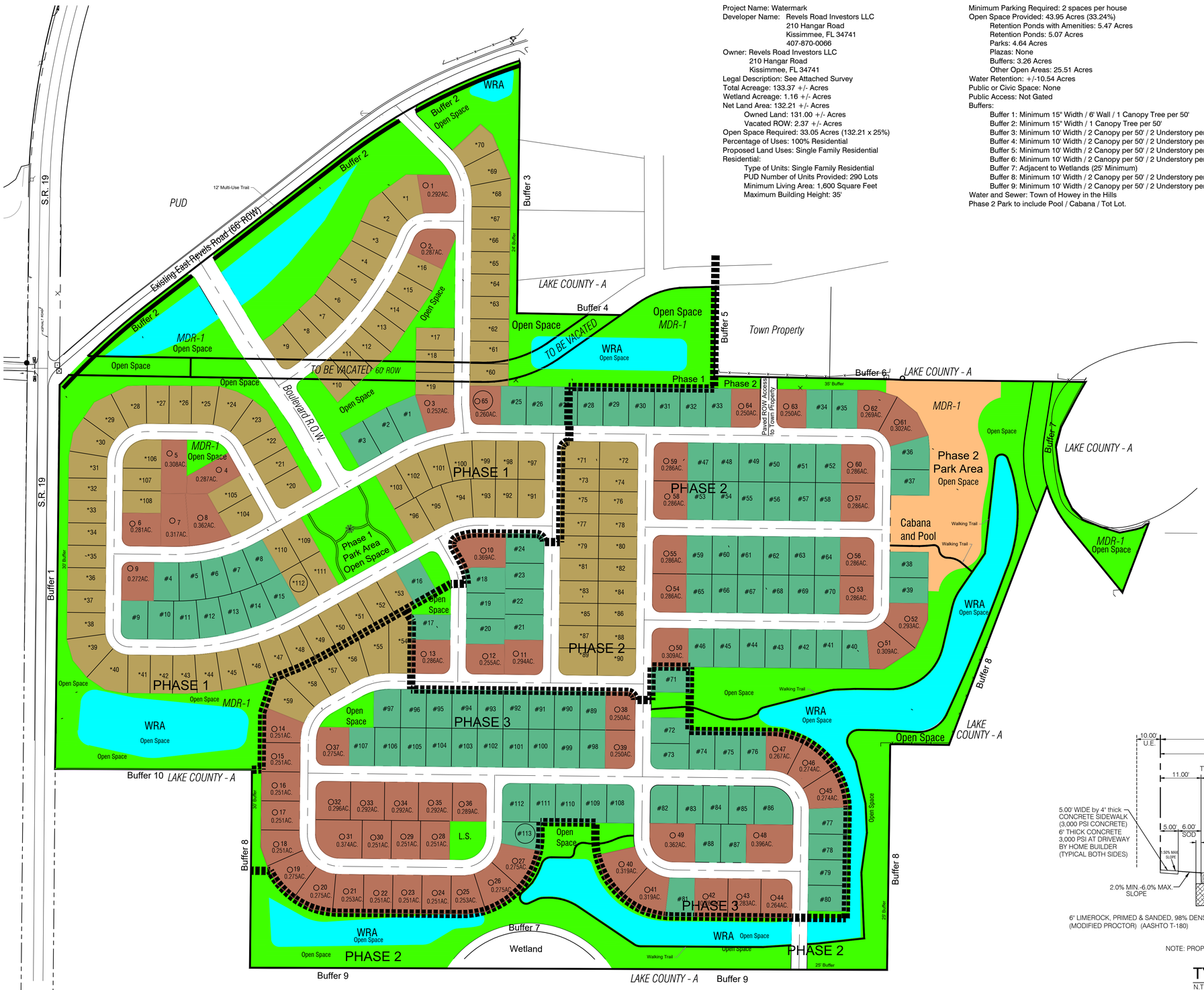

LEGEND

- *70' x 120' LOTS = 112 LOTS
- #80' X 120' LOTS = 113 LOTS
- ○ MIN. 80' (1/4 AC.) LOTS = 65 LOTS

TOTAL NUMBER OF LOTS = 290 LOTS

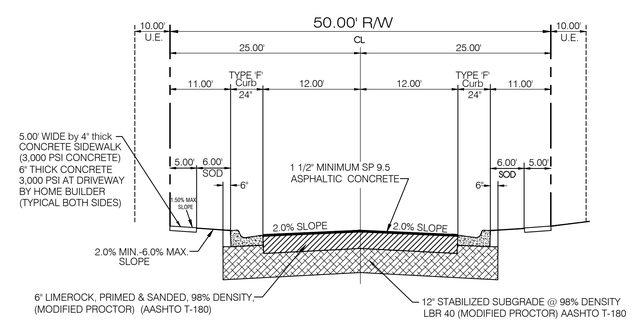

NOTE: PROPOSED CURB TO MEET TOWN OF HOWEY LIST OF SPECIFICATIONS.

TYPICAL ROAD SECTION

N.T.S.

DATE	REVISION
	1
	2
	3
	4
	5
	6
	7
	8

WATERMARK

CONCEPTUAL LAND USE PLAN

halff
902 North Sinclair Ave.
Tavares, Florida 32778
Office: 352.343.8481
Fax: 352.343.8495
Certificate of Authorization Number: 33380

DATE:	09/17/2024
DESIGNED BY:	SPH
DRAWN BY:	SPH
CHECKED BY.:	BT
JOB NO.:	45548.002
FILE NAME:	WATERMARKMAS

Sheet 1

BRETT TOBIAS, PE
Registered Eng #69017