LEGAL DESCRIPTION

A TRACT OF LAND BEING PART OF SECTION 23, TOWNSHIP 20 SOUTH, RANGE 25 EAST, LAKE COUNTY, FLORIDA, AND BEING MORE PARTICULARLY DESCRIBED AS FOLLOWS;

COMMERCIAL 1

A PORTION OF GOVERNMENT LOTS 2, 8, AND 9 LYING WESTERLY OF HIGHWAY 19, ALL LYING IN SECTION 23, TOWNSHIP 20 SOUTH, RANGE 25 EAST, LAKE COUNTY, FLORIDA BEING MORE PARTICULARLY DESCRIBED AS FOLLOWS: AS A POINT OF REFERENCE COMMENCE AT SOUTHWEST CORNER OF THE SOUTHWEST ¼ OF SECTION 23, TOWNSHIP 20 SOUTH, RANGE 25 EAST, LAKE COUNTY, FLORIDA AND PROCEED N 00°53'14" E, ALONG THE WEST BOUNDARY OF THE SOUTHWEST 1/4 OF SAID SECTION 23, A DISTANCE OF 1171.08 FEET TO A POINT ON THE NORTHERLY RIGHT OF WAY LINE OF COUNTY ROAD 48 SAID POINT LYING ON A CURVE CONCAVE NORTHEASTERLY HAVING A RADIUS OF 5679.58 FEET AND A CHORD BEARING AND DISTANCE OF S 69°35'43" E, A DISTANCE OF 1186.12 FEET; THENCE ALONG THE ARC OF SAID CURVE TO THE LEFT AND SAID NORTHERLY RIGHT OF WAY LINE, A DISTANCE OF 1188.29 FEET; THENCE S 75°35'20" E, ALONG SAID NORTHERLY RIGHT OF WAY LINE, A DISTANCE OF 1460.31 FEET TO A POINT OF CURVATURE OF A CURVE CONCAVE SOUTHWESTERLY HAVING A RADIUS OF 2341.83 FEET AND A CHORD BEARING AND DISTANCE OF S 72°35'58" E, A DISTANCE OF 223.25 FEET; THENCE ALONG THE ARC OF SAID CURVE TO THE RIGHT AND ALONG SAID NORTHERLY RIGHT OF WAY LINE, A DISTANCE OF 223.33 FEET; THENCE LEAVING SAID NORTHERLY RIGHT OF WAY LINE, N 15°36'38" E, A DISTANCE OF 52.62 FEET; THENCE N 75°08'12" E, A DISTANCE OF 258.80 FEET TO THE POINT OF BEGINNING; THENCE N 15°36'16" E, A DISTANCE OF 306.32 FEET; THENCE N 60°15'03" E, A DISTANCE OF 218.37 FEET; THENCE N 46°59'01" E, A DISTANCE OF 705.92 FEET; THENCE S 43°00'59" E, A DISTANCE OF 404.25 FEET TO A POINT OF CURVATURE OF A CURVE CONCAVE SOUTHWESTERLY HAVING A RADIUS OF 100.00 FEET AND A CHORD BEARING AND DISTANCE OF S 27°52'48" E, A DISTANCE OF 52.22 FEET; THENCE ALONG THE ARC OF SAID CURVE TO THE RIGHT, A DISTANCE OF 52.84 FEET TO A POINT OF REVERSE CURVATURE OF A CURVE CONCAVE NORTHEASTERLY HAVING A RADIUS OF 120.00 FEET AND A CHORD BEARING AND DISTANCE OF S 27°52'48" E, A DISTANCE OF 62.67 FEET; THENCE ALONG THE ARC OF SAID CURVE TO THE LEFT, A DISTANCE OF 63.40 FEET; THENCE S 43°00'59" E, A DISTANCE OF 125.00 FEET TO A POINT ON THE WESTERLY RIGHT OF WAY LINE OF STATE ROAD 19; THENCE S 46°59'01" W, ALONG SAID WESTERLY RIGHT OF WAY LINE, A DISTANCE OF 650.20 FEET TO A POINT ON THE NORTHERLY RIGHT OF WAY LINE OF STATE ROAD 19; THENCE S 75°06'54" W, ALONG SAID NORTHERLY RIGHT OF WAY LINE, A DISTANCE OF 210.88; THENCE LEAVING SAID NORTHERLY RIGHT OF WAY LINE, N 41°20'52" W, A DISTANCE OF 270.98 FEET TO A POINT OF CURVATURE OF A CURVE CONCAVE NORTHWESTERLY HAVING A RADIUS OF 133.42 FEET AND A CHORD BEARING AND DISTANCE OF S 62°15'27" W, A DISTANCE OF 62.77 FEET; THENCE ALONG THE ARC OF SAID CURVE TO THE RIGHT, A DISTANCE OF 63.36 FEET; THENCE S 75°51'45" W, A DISTANCE OF 298.03 FEET; THENCE S 75°08'12" W, A DISTANCE OF 229.89 FEET; THENCE S 15°36'38" W, A DISTANCE OF 28.52 FEET TO A POINT ON THE AFOREMENTIONED NORTHERLY RIGHT OF WAY LINE OF COUNTY ROAD 48 AND A POINT ON A CURVE CONCAVE SOUTHWESTERLY HAVING A RADIUS OF 2341.83 FEET AND A CHORD BEARING AND DISTANCE OF N 69°15'12" W, A DISTANCE OF 50.20 FEET; THENCE ALONG THE ARC OF SAID CURVE TO THE LEFT AND ALONG SAID NORTHERLY RIGHT OF WAY LINE, A DISTANCE OF 50.20 FEET TO THE POINT OF BEGINNING.

SAID PARCEL CONTAINING 630854 SQUARE FEET OR 14.48 ACRES MORE OR LESS.

TOGETHER WITH

COMMERCIAL 2

A PORTION OF GOVERNMENT LOT 9 LYING WESTERLY OF HIGHWAY 19, ALL LYING IN SECTION 23, TOWNSHIP 20 SOUTH, RANGE 25 EAST, LAKE COUNTY, FLORIDA BEING MORE PARTICULARLY DESCRIBED AS FOLLOWS: AS A POINT OF REFERENCE COMMENCE AT SOUTHWEST CORNER OF THE SOUTHWEST ¼ OF SECTION 23, TOWNSHIP 20 SOUTH, RANGE 25 EAST, LAKE COUNTY, FLORIDA AND PROCEED N 00°53'14" E, ALONG THE WEST BOUNDARY OF THE SOUTHWEST 1/4 OF SAID SECTION 23, A DISTANCE OF 1171.08 FEET TO A POINT ON THE NORTHERLY RIGHT OF WAY LINE OF COUNTY ROAD 48 SAID POINT LYING ON A CURVE CONCAVE NORTHEASTERLY HAVING A RADIUS OF 5679.58 FEET AND A CHORD BEARING AND DISTANCE OF S 69°35'43" E, A DISTANCE OF 1186.12 FEET; THENCE ALONG THE ARC OF SAID CURVE TO THE LEFT AND SAID NORTHERLY RIGHT OF WAY LINE, A DISTANCE OF 1188.29 FEET; THENCE S 75°35'20" E, ALONG SAID NORTHERLY RIGHT OF WAY LINE, A DISTANCE OF 1460.31 FEET TO A POINT OF CURVATURE OF A CURVE CONCAVE SOUTHWESTERLY HAVING A RADIUS OF 2341.83 FEET AND A CHORD BEARING AND DISTANCE OF S 68°56'00" E, A DISTANCE OF 521.94 FEET; THENCE ALONG THE ARC OF SAID CURVE TO THE RIGHT AND ALONG SAID NORTHERLY RIGHT OF WAY LINE, A DISTANCE OF 523.03 FEET TO A POINT ON THE NORTHERLY RIGHT OF WAY LINE OF STATE ROAD 19; THENCE N 75°06'54" E, ALONG SAID NORTHERLY RIGHT OF WAY LINE, A DISTANCE OF 742.75 FEET TO A POINT ON THE WESTERLY RIGHT OF WAY LINE OF STATE ROAD 19; THENCE N 46°59'01" E, ALONG SAID WESTERLY RIGHT OF WAY LINE, A DISTANCE OF 1328.28 TO THE POINT OF BEGINNING; THENCE LEAVING SAID WESTERLY RIGHT OF WAY LINE, N 89°48'40" W, A DISTANCE OF 738.20; THENCE S 46°59'01" W, A DISTANCE OF 50.00 FEET; THENCE S 43°00'59" E, A DISTANCE OF 269.48 FEET TO A POINT OF CURVATURE OF A CURVE CONCAVE NORTHEASTERLY HAVING A RADIUS OF 100.00 FEET AND A CHORD BEARING AND DISTANCE OF S 58°09'10" E, A DISTANCE OF 52.22 FEET; THENCE ALONG THE ARC OF SAID CURVE TO THE LEFT, A DISTANCE OF 52.84 FEET TO A POINT OF REVERSE CURVATURE OF A CURVE CONCAVE SOUTHWESTERLY HAVING A RADIUS OF 120.00 FEET AND A CHORD BEARING AND DISTANCE OF S 58°09'10" E, A DISTANCE OF 62.67 FEET; THENCE ALONG THE ARC OF SAID CURVE TO THE RIGHT, A DISTANCE OF 63.40 FEET; THENCE S 43°00'59" E, A DISTANCE OF 125.00 FEET TO A POINT ON THE AFOREMENTIONED WESTERLY RIGHT OF WAY OF STATE ROAD 19; THENCE N 46°59'01" E, ALONG SAID RIGHT OF WAY LINE, A DISTANCE OF 558.08 FEET TO THE POINT OF BEGINNING.

SAID PARCEL CONTAINING 155,772 SQUARE FEET OR 3.58 ACRES MORE OR LESS.

TOGETHER WITH

ACCESS EASEMENT

COMMENCE AT THE NORTHEAST CORNER OF THE SOUTHEAST 1/4 SECTION 23-20-25; THENCE SOUTH 00°28'42" WEST ALONG THE EAST LINE OF THE SOUTHEAST 1/4 OF SECTION 25, A DISTANCE OF 765.11 FEET TO THE NORTHERLY RIGHT OF WAY OF STATE ROAD 19; THENCE SOUTH 46°59'01" WEST ALONG THE NORTHERLY RIGHT OF WAY, A DISTANCE OF 1,350.12 FEET TO THE POINT OF BEGINNING; THENCE CONTINUE SOUTH 46°59'01" WEST, A DISTANCE OF 120.00 FEET; THENCE NORTH 43°00'59" WEST, A DISTANCE OF 125.00 FEET; TO A POINT OF CURVATURE OF A CURVE CONCAVE NORTHEASTERLY, HAVING A RADIUS OF 120.00 FEET AND A CHORD WHICH BEARS NORTH 27°52'48" WEST, A DISTANCE 62.67 FEET; THENCE ALONG THE ARC OF SAID CURVE TO THE RIGHT, A DISTANCE OF 63.40 FEET; TO A POINT OF REVERSE CURVATURE OF A CURVE HAVING A RADIUS OF 100.00 FEET AND A CHORD WHICH BEARS NORTH 27°52'48" WEST, AND A DISTANCE OF 52.22 FEET; THENCE ALONG THE ARC OF SAID CURVE TO THE LEFT, A DISTANCE OF 52.84 FEET; THENCE NORTH 43°00'59" WEST, A DISTANCE OF 404.25 FEET; THENCE NORTH 46°59'01" EAST, A DISTANCE OF 60.00 FEET; THENCE SOUTH 43°00'59" EAST, A DISTANCE OF 404.25 FEET; TO A POINT OF CURVATURE OF A CURVE CONCAVE NORTHEASTERLY, HAVING A RADIUS OF 100.00 FEET AND A CHORD WHICH BEARS SOUTH 58°09'10" EAST, A DISTANCE 52.22 FEET; THENCE ALONG THE ARC OF SAID CURVE TO THE LEFT, A DISTANCE OF 52.84 FEET; TO A POINT OF REVERSE CURVATURE OF A CURVE HAVING A RADIUS OF 120.00 FEET AND A CHORD WHICH BEARS SOUTH 58°09'10" EAST, AND A DISTANCE OF 62.67 FEET; THENCE ALONG THE ARC OF SAID CURVE TO THE RIGHT, A DISTANCE OF 63.40 FEET; THENCE SOUTH 43°00'59" EAST, A DISTANCE OF 125.00 FEE; TO THE POINT OF BEGINNING.

CONTAINING 49,343.34 SQUARE FEET OR 1.13 ACRES, MORE OR LESS.

PARCEL ID

- 23-20-25-0004-000-01600
- 23-20-25-0004-000-01700
- 23-20-25-0004-000-01800

ZONING
PLANNED UNIT DEVELOPMENT (PUD)

FUTURE LAND USE
PLANNED UNIT DEVELOPMENT (PUD)

AGENCIES TO BE NOTIFIED / UTILITY PROVIDERS

HOWEY IN THE HILLS
101 N. PALM AVENUE
HOWEY-IN-THE-HILLS, FL 34737
P: (352) 324-2290

WATER & WASTE WATER
HOWEY- IN-THE-HILLS
101 N. PALM AVENUE
HOWEY-IN-THE-HILLS, FL 34737
P: (352) 540-4368

SJRWMD
2501 S. BINION ROAD
APOPKA, FL 32703
P: (407) 659-4821

DUKE ENERGY
WILLIAM COPPINGER
150 PROGRESS ENERGY WAY
LONGWOOD, FL 32750

QUANTUM
JOSTIN BURBIDGE
P: (941) 815-6317

CABLE- COMCAST
THOMAS OSEBOLD

CONSTRUCTION PLANS

FOR:

LAKE HILLS SHOPPING CENTER

TOWN OF HOWEY IN THE HILLS, FL

SECTIONS 23, TOWNSHIP 20S, RANGE 25E

OCTOBER 2024

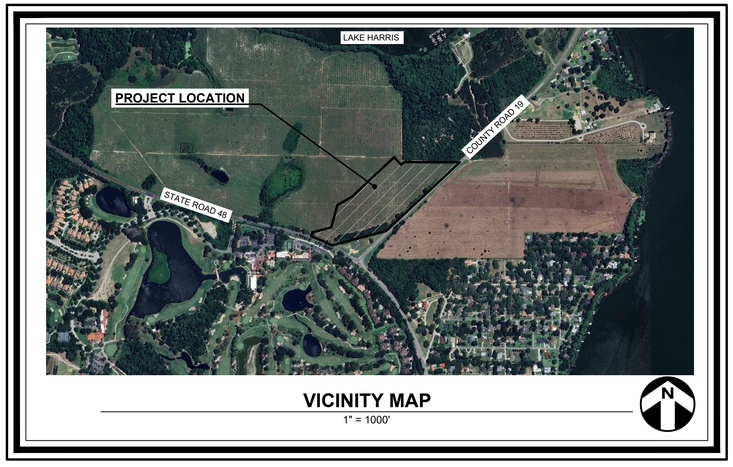

VICINITY MAP
1" = 1000'

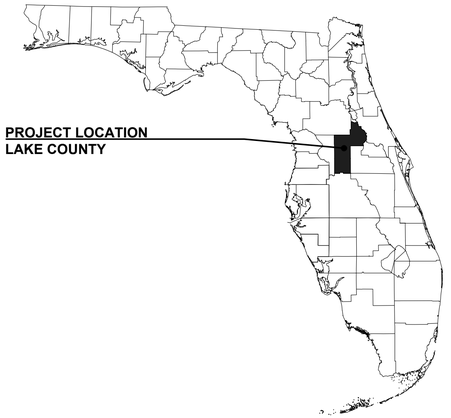

SHEET LIST	
SHEET #	SHEET TITLE
C001	COVER SHEET
C002	GENERAL NOTES
C007-C008	SWPPP AND DEMO PLAN
C009	MASTER SITE PLAN
C101-C102	GEOMETRY PLAN
C200-C201	UTILITY PLAN
C300-C301	DRAINAGE PLAN
C400-C402	GRADING PLAN
C410	ADA ACCESSIBILITY PLAN
C411	TEMPORARY SITE ACCESS AND STAGING PLAN
C500-C501	ROADWAY PLAN & PROFILES
C710	OFFSITE IMPROVEMENTS PLAN
C711	OFFSITE DRAINAGE AND GRADING PLAN
C712	OFFSITE CROSS SECTIONS
C800-C801	VEHICLE CIRCULATION PLAN
C900-C901	CONSTRUCTION DETAILS
C910-C913	CITY DETAILS
C920-C921	FDOT DETAILS

Sunshine811
Call 811 or visit sunshine811.com two full business days before digging to have buried facilities locared and marked.
Check positive response codes before you dig!

MADDEN
MOORHEAD & STOKES, LLC
CIVIL ENGINEERS
431 E. Horatio Avenue, Suite 260
Maitland, Florida 32751
(407) 629-8330
CA# 0007723

ENGINEER
MADDEN, MOORHEAD & STOKES, LLC
ATTN: BENJAMIN S. BECKHAM, PE, CFM
431 E HORATIO AVE, STE 260
(407) 629-8330 X 126
BBeckham@Madden-eng.com

SURVEYOR
HAMILTON ENGINEERING
& SURVEYING, LLC.
3409 W. LEMON STREET
TAMPA, FLORIDA 33609
PHONE: (813) 250-3535

OWNER
PUBLIX SUPER MARKETS, INC
3300 PUBLIX CORPORATE PARKWAY
LAKELAND, FL 33802

APPLICANT
WINDCREST ACQUISITIONS, LLC
605 E. ROBINSON ST. SUITE 340
ORLANDO, FL 32801
PHONE: (407) 219-3540 X.3

BENJAMIN S. BECKHAM LICENSE NO. 79452 STATE OF FLORIDA PROFESSIONAL ENGINEER

This item has been digitally signed and sealed by Benjamin S. Beckham, PE on the date adjacent to the seal.

Printed copies of this document are not considered signed and sealed and the signature must be verified on any electronic copies.

BENJAMIN S. BECKHAM LICENSE No. 79452 STATE OF FLORIDA PROFESSIONAL ENGINEER

This item has been electronically signed and sealed by Benjamin S. Beckham, P.E. using a digital signature and date. Printed copies of this document are not considered signed and sealed and the signature must be verified on any electronic copies.

Digitally signed by Benjamin S Beckham
Date: 2025.01.10 14:55:42 -05'00'

SUBMITTAL LOG		
DATE	SUBMITTAL	BY

LAKE HILLS SHOPPING CENTER - CONSTRUCTION PLANS
JOB No. 23041

GENERAL NOTES

1. ALL CONSTRUCTION WORK SHALL BE IN ACCORDANCE WITH THE LATEST LOCAL AGENCY DETAILS, THE FDOT "STANDARD SPECIFICATIONS FOR ROAD AND BRIDGE CONSTRUCTION" ADOPTED IN 1991 BY THE STATE OF FLORIDA, AND ALL SUPPLEMENTS THERETO, AND THE FDOT "STANDARD PLANS", WHICHEVER IS MORE STRINGENT.

2. ALL FDOT DESIGN INDICES ARE HEREBY INCORPORATED AS PLAN REFERENCES HEREIN. CONTRACTOR IS RESPONSIBLE FOR OBTAINING COMPLETE COPIES OF ALL APPLICABLE INDEX DRAWINGS AND CONSTRUCTING ALL WORKS IN CONFORMANCE WITH THE FDOT STANDARD PLANS, LATEST EDITION.

3. THE LOCATIONS OF EXISTING UTILITIES SUCH AS WATER MAINS, SEWER MAINS, GAS LINES, ETC., AS SHOWN ON THE PLANS, WITH THE EXCEPTION OF THE LOCATIONS OF EXISTING UTILITIES AT ALL POINTS OF CONNECTION TO AND AT ALL AREAS OF CONFLICT WITH UTILITY PROVIDER MAINS, WHICH HAVE BEEN FIELD VERIFIED, HAVE BEEN DETERMINED FROM THE BEST AVAILABLE INFORMATION AND ARE PROVIDED FOR THE CONVENIENCE OF THE CONTRACTOR. HOWEVER, THE ENGINEER AND OWNER DO NOT ASSUME RESPONSIBILITY FOR THE SIZES AND LOCATIONS SHOWN. THE CONTRACTOR SHALL BE RESPONSIBLE FOR FIELD VERIFICATION OF THE SIZE AND LOCATION OF ALL EXISTING UTILITIES SHOWN AND NOT SHOWN ON THESE PLANS.

4. CONTRACTOR, INCLUDING ANY SUB-CONTRACTORS, IS RESPONSIBLE TO ENSURE THAT ALL REQUIRED PERMITS ARE OBTAINED AND ARE IN HAND AT THE JOB SITE PRIOR TO THE COMMENCEMENT OF CONSTRUCTION. CONTRACTOR SHALL ABIDE BY ALL CONDITIONS CONTAINED THEREIN. PERMITS INCLUDED (BUT NOT NECESSARILY LIMITED TO) ARE:
   - ACOE NATIONWIDE OR INDIVIDUAL DREDGE AND FILL
   - FDEP WATER DISTRIBUTION
   - FDEP SANITARY SEWER COLLECTION AND TRANSMISSION
   - FDEP REUSE
   - FDEP DREDGE AND FILL
   - FDEP NPDES GENERIC PERMIT FOR STORM WATER DISCHARGE FROM LARGE AND SMALL CONSTRUCTION ACTIVITIES
   - FDOT DRIVEWAY CONNECTION
   - FDOT UTILITY
   - FDOT STORMWATER DISCHARGE CONNECTION
   - FLORIDA FISH AND WILDLIFE CONSERVATION COMMISSION PERMIT FOR IMPACTS TO PROTECTED SPECIES
   - LOCAL RIGHT OF WAY USE
   - LOCAL UNDERGROUND UTILITIES
   - WATER MANAGEMENT DISTRICT CONSUMPTIVE USE FOR CONSTRUCTION DEWATERING (CUP)
   - WATER MANAGEMENT DISTRICT ENVIRONMENTAL RESOURCE PERMIT (ERP)

5. CONTRACTOR IS RESPONSIBLE FOR VERIFYING ALL SETBACKS AND EASEMENTS BEFORE BEGINNING CONSTRUCTION.

6. BENCHMARKS AND OTHER REFERENCE POINTS SHALL BE CAREFULLY MAINTAINED THROUGHOUT THE CONSTRUCTION PERIOD. IF DISTURBED OR DESTROYED, THESE POINTS SHALL BE REPLACED BY A LICENSED FLORIDA PROFESSIONAL LAND SURVEYOR (P.L.S.) AT CONTRACTOR'S EXPENSE.

7. DIFFERING SITE CONDITIONS FROM THAT WHICH IS REPRESENTED HEREON, WHETHER ABOVE, ON, OR BELOW THE SURFACE OF THE GROUND, SHALL BE BROUGHT TO THE IMMEDIATE ATTENTION OF THE ENGINEER AND OWNER IN WRITING. NO CLAIM FOR EXPENSES INCURRED BY THE CONTRACTOR DUE TO DIFFERING SITE CONDITIONS WILL BE ALLOWED IF CONTRACTOR FAILS TO PROVIDE THE REQUIRED WRITTEN NOTIFICATION OF SUCH CONDITIONS TO THE ENGINEER AND OWNER.

8. THE CONTRACTOR SHALL BE RESPONSIBLE FOR DEMOLITION AND REMOVAL OF ALL EXISTING STRUCTURES, ETC., UNLESS OTHERWISE NOTED. ALL SOIL STRIPPINGS AND ANY UNSUITABLE MATERIAL SHALL BE REMOVED FROM THE SITE AND DISPOSED OF BY THE CONTRACTOR UNLESS OTHERWISE DIRECTED BY THE OWNER.

9. THE CONTRACTOR SHALL PROTECT ALL EXISTING STRUCTURES AND UTILITIES NOTED TO REMAIN FROM DAMAGE OR DISPLACEMENT DURING CONSTRUCTION. IN THE EVENT OBSTRUCTIONS ARE ENCOUNTERED, THE CONTRACTOR SHALL PROMPTLY NOTIFY THE ENGINEER AND THE UTILITY COMPANY. THE CONTRACTOR WILL BE RESPONSIBLE FOR ALL COSTS INCURRED TO REPAIR DAMAGE OR CORRECT DISPLACEMENT.

10. CONTRACTOR SHALL BE EXTREMELY CAUTIOUS WHEN WORKING NEAR TREES WHICH ARE TO BE SAVED, WHETHER SHOWN IN THE PLANS OR DESIGNATED IN THE FIELD. CONTRACTOR SHALL BECOME FAMILIAR WITH AND CONFORM WITH ALL TREE PROTECTION/PRESERVATION PROVISIONS OF THE PRELIMINARY SUBDIVISION PLAN/DEVELOPMENT PLAN AND LOCAL GOVERNMENT. CONTRACTOR SHALL BE RESPONSIBLE FOR REPLACEMENT AND MITIGATION COSTS FOR ANY TREES REMOVED THAT WERE DESIGNATED TO BE PRESERVED.

11. WHEN DETAILS ARE PROVIDED, CONTRACTOR SHALL CONSTRUCT JOB PER SPECIFIC DETAILS, AND NOT BY SCALING FROM THESE PLANS.

12. IT IS THE RESPONSIBILITY OF THE CONTRACTOR TO PROVIDE ANY REQUIRED TRAFFIC CONTROL PLANS. ALL WORK SHALL BE EXECUTED UNDER THE ESTABLISHED PLAN AND FDOT, AND LOCAL AGENCY APPROVED PROCEDURES.

13. THE CONTRACTOR SHALL RESTORE OFF SITE CONSTRUCTION AREAS TO EQUAL OR BETTER CONDITION THAN EXISTED PRIOR TO COMMENCEMENT OF CONSTRUCTION.

14. AS-BUILT DRAWINGS SHALL BE KEPT BY THE CONTRACTOR AND SUBMITTED TO THE PROJECT ENGINEER UPON PROJECT COMPLETION.

15. CONTRACTOR SHALL COMPLY WITH ALL LOCAL AGENCY REQUIREMENTS FOR INSPECTION AND TESTING.

16. ALL NEW UTILITIES AND UPGRADED UTILITIES PROVIDED TO OR ON THE SITE MUST BE INSTALLED UNDERGROUND.

17. THE CONTRACTOR SHALL BE RESPONSIBLE FOR THE RESTORATION OF ANY TRAFFIC SIGNAL EQUIPMENT INCLUDING BUT NOT LIMITED TO FIBER LOOP SENSORS PULL BOXES, CONDUIT TRAFFIC SIGNALS, AND CABINETS. ANY ITEMS DAMAGED BY THE CONTRACTOR WILL BE RESTORED TO THEIR ORIGINAL CONDITIONS UNLESS OTHERWISE AGREED UPON BY THE COUNTY TRAFFIC ENGINEER.

18. ALL CONSTRUCTION MUST BE IN ACCORDANCE WITH UTILITY PROVIDER'S STANDARDS AND CONSTRUCTION SPECIFICATIONS, LATEST EDITION.

19. CONTRACTOR SHALL NOTIFY ALL APPROPRIATE UTILITY COMPANIES OF PROPOSED START OF WORK IN ACCORDANCE WITH THEIR STANDARD REQUIREMENTS; INCLUDING BUT NOT LIMITED TO, WATER, RECLAIMED WATER, SEWER, POWER, TELEPHONE, GAS AND CABLE TV COMPANIES.

20. PRIOR TO COMMENCEMENT, CONTRACTOR SHALL PROVIDE ENGINEER WITH CONSTRUCTION SCHEDULE FOR VARIOUS SITE WORK ELEMENTS SO THAT PERIODIC SITE VISITS MAY BE COORDINATED TO ENSURE TIMELY CERTIFICATION OF COMPLETION TO AGENCIES AND AVOID DELAYS IN ISSUANCE OF CERTIFICATES OF OCCUPANCY/COMPLETION.

21. ALL RECOMMENDATIONS AND REQUIREMENTS OF INSPECTION PERSONNEL OTHER THAN OWNER/OWNER'S REPRESENTATIVE SHALL BE REPORTED TO ENGINEER/OWNER/OWNER'S REPRESENTATIVE PRIOR TO IMPLEMENTATION. COMPENSATION WILL NOT BE ALLOWED FOR WORK THAT IS NOT AUTHORIZED BY ENGINEER/OWNER/OWNER'S REPRESENTATIVE.

22. CONTRACTOR SHALL CONFIRM COMPATIBILITY OF PIPE SLOPES AND INVERTS DURING SHOP DRAWING AND MATERIALS ORDERING PHASE OF PROJECT AND ADVISE ENGINEER OF ANY DISCREPANCIES.

23. NO EXISTING MATERIAL SHALL BE USED IN NEW CONSTRUCTION UNLESS APPROVED DURING THE SHOP DRAWING APPROVAL PROCESS BY ENGINEER/OWNER/OWNER'S REPRESENTATIVE IN WRITING.

24. CONTRACTOR SHALL STAKE ALL IMPROVEMENTS USING THE PLAT(S), ROAD CENTERLINE GEOMETRY, AND BUILDING COORDINATES PROVIDED IN THESE PLANS. CONTRACTOR SHALL CONFIRM WITH THE ENGINEER THAT THE PLAT IS CURRENT PRIOR TO CONSTRUCTION.

25. CONTRACTOR SHALL CONFIRM THE BUILDING DIMENSIONS SHOWN HEREIN WITH THOSE IN THE FINAL ARCHITECTURAL DRAWINGS PRIOR TO STAKEOUT. IT IS THE CONTRACTOR'S SOLE RESPONSIBILITY TO COMPLETELY STAKE AND CHECK ALL IMPROVEMENTS TO ENSURE ADEQUATE POSITIONING, BOTH HORIZONTAL AND VERTICAL, INCLUDING MINIMUM BUILDING SETBACKS PRIOR TO THE INSTALLATION OF ANY IMPROVEMENT.

PAVING AND DRAINAGE

1. THE CONTRACTOR SHALL CONSTRUCT PAVEMENT IN ACCORDANCE WITH TYPICAL PAVEMENT SECTIONS AND LOCAL AGENCY SPECIFICATIONS. THE FINISHED PAVEMENT GRADES SHALL CONFORM TO THOSE SPECIFIED ON THE GRADING PLAN.

2. FLORIDA LAW (F.S. 553.851) PROTECTION OF UNDERGROUND PIPELINES MANDATES THAT "NO EXCAVATOR SHALL COMMENCE OR PERFORM ANY EXCAVATION IN ANY PUBLIC OR PRIVATE STREET, ALLEY, RIGHT-OF-WAY DEDICATED TO THE PUBLIC USE, OR GAS UTILITY EASEMENT WITHOUT FIRST OBTAINING INFORMATION CONCERNING THE POSSIBLE LOCATION OF GAS PIPELINES IN THE AREA OF THE PROPOSED EXCAVATION." THIS INCLUDES ANY OPERATION UTILIZING HAND TOOLS OR POWER TOOLS WHICH MOVES OR REMOVES ANY STRUCTURE, EARTH, ROCK, OR OTHER MASS OF MATERIAL BY SUCH METHODS AS DIGGING, BACKFILLING, DEMOLITION, GRADING, DITCHING, DRILLING, BORING AND CABLE PLOWING. THE EXCAVATOR MUST NOTIFY THE GAS UTILITY A MINIMUM OF 48 HOURS AND A MAXIMUM OF 5 DAYS PRIOR TO EXCAVATING (EXCLUDING SATURDAYS, SUNDAYS, AND LEGAL HOLIDAYS).

3. EXCAVATION, PAVING, AND STORM SEWER WORK SHALL BE DONE IN ACCORDANCE WITH FDOT "STANDARD SPECIFICATION FOR ROAD AND BRIDGE CONSTRUCTION", LATEST EDITION, AND LOCAL AGENCY SPECIFICATIONS.

4. UNLESS OTHERWISE NOTED, GRADE TO MEET EXISTING ELEVATIONS AT PROPERTY LINES. CONTRACTOR SHALL PROVIDE POSITIVE DRAINAGE OF THE SITE TO THE RETENTION PONDS AS SHOWN BY PROPOSED GRADES AND FLOW ARROWS.

5. DURING CONSTRUCTION, THE CONTRACTOR SHALL PROVIDE ADEQUATE DRAINAGE AND PROPER SOIL EROSION CONTROL MEASURES FOR PROTECTION OF ALL DRAINAGE AND SEWER STRUCTURES AND AT ALL ADJACENT LANDS AND ROADS.

6. THE CONTRACTOR IS RESPONSIBLE FOR OBTAINING ANY AND ALL GEOTECHNICAL REPORTS PREPARED FOR THE SITE. GEOTECHNICAL RECOMMENDATIONS ARE NOT THE RESPONSIBILITY OF ENGINEER. ENGINEER HAS RELIED ON THE GEOTECHNICAL REPORT(S) IN PREPARATION OF THE DRAWINGS. ANY CONFLICT BETWEEN INFORMATION WITHIN THE REPORT AND THESE DRAWINGS SHALL BE REPORTED TO ENGINEER/OWNER/OWNER'S REPRESENTATIVE. ENGINEER ASSUMES NO RESPONSIBILITY FOR THE CORRECTNESS, COMPLETENESS, OR ACCURACY OF GEOTECHNICAL INFORMATION.

7. THE SITE SHALL BE CLEARED OF ALL TREES EXCEPT THOSE WHICH ARE DESIGNATED TO BE SAVED OR RELOCATED. BEFORE CONSTRUCTION, THE CONTRACTOR SHALL MEET AT THE SITE WITH THE OWNER. AT THIS TIME, ANY TREES TO BE SAVED SHALL BE POINTED OUT AND TAGGED. THESE TREES SHALL BE PROTECTED FROM DAMAGE.

8. THE CONTRACTOR SHALL IMMEDIATELY NOTIFY THE SUPERVISING ENGINEER IF A PAVEMENT OR FOUNDATION STAKE IS DISTURBED.

9. THE CONTRACTOR SHALL INSTALL DROP CURBS AND HANDICAP RAMPS AT ALL INTERSECTIONS OF THE SIDEWALK WITH THE PROPOSED PAVEMENT, UNLESS OTHERWISE SPECIFIED.

10. FOR HORIZONTAL AND VERTICAL CLEARANCES BETWEEN STORM PIPES AND WATER MAINS/SERVICES, SEE WATER NOTES ON THIS SHEET AND FDEP SEPARATION TABLE ON UTILITY PLAN.

11. ALL PUBLIC STORM PIPE MATERIALS SHALL BE REINFORCED CONCRETE PIPE (RCP) ASTM C-76 CLASS III, UNLESS OTHERWISE SPECIFIED. LIFTING HOLES ARE PROHIBITED.

12. ALL PRIVATE STORM PIPE MATERIALS SHALL BE AS FOLLOWS:
    - 12.1. DIAMETERS LESS THAN OR EQUAL TO 12-INCH SHALL BE HIGH DENSITY POLYETHYLENE (HDPE) PIPE
    - 12.2. DIAMETERS GREATER THAN OR EQUAL TO 15-INCH SHALL BE POLYPROPYLENE (PP) PIPE.

13. MINIMUM COVER OVER ALL PIPE SHALL BE 36-INCHES FROM TOP OF PIPE TO FINISHED GRADE, UNLESS OTHERWISE NOTED.

14. ALL STORM SYSTEM MANHOLE AND INLET STRUCTURES SHALL BE PRECAST CONCRETE.

15. THE CONTRACTOR SHALL USE CONCRETE WITH A MINIMUM 28 DAY STRENGTH OF 3,000 P.S.I..

16. ALL SIDEWALK WIDTHS SHALL BE AS NOTED ON THE SITE PLAN AND SHALL HAVE 1-INCH DEEP CONTRACTION JOINTS EVERY 5-FEET AND AN EXPANSION JOINT EVERY 20-FEET (MINIMUM). MAXIMUM SIDEWALK CROSS SLOPES SHALL BE 2.00% AND MAXIMUM SIDEWALK RUNNING SLOPES SHALL BE 5.00% EXCEPT AT RAMP LOCATIONS. MAXIMUM RAMP SLOPES SHALL BE 8.33%.

17. PROVIDE FDOT TYPE III SILT FENCE ALONG THE PROPERTY LINES AND PHASE LINES AS WELL AS ANY CONSTRUCTION WITHIN THE OTHER PHASES THAT IS DEEMED NECESSARY.

18. ALL TEST REPORTS GENERATED BY A TESTING FIRM ARE TO HAVE COPIES SENT DIRECTLY TO THE LOCAL AGENCY AS SOON AS THEY ARE GENERATED. CLEARANCE FROM THE LOCAL AGENCY SHALL BE RECEIVED PRIOR TO PAVING.

19. THE BASE COURSE SHALL NOT BE CONSTRUCTED UNTIL AFTER SUBGRADE CONSTRUCTION HAS BEEN COMPLETED AND REQUIRED SUBGRADE TEST RESULTS HAVE BEEN SUBMITTED TO AND APPROVED BY THE LOCAL AGENCY'S ENGINEER.

20. THE FINISHED BASE COURSE SHALL BE PRIMED WITHOUT DELAY, PROTECTED FROM HEAVY TRAFFIC, AND CONTINUOUSLY MAINTAINED FREE OF DAMAGE UNTIL THE WEARING SURFACE IS APPLIED. ALL BAD AREAS SHALL BE CUT OUT AND REPLACED PRIOR TO APPLYING WEARING SURFACE.

21. ASSUMING ACCEPTABLE CURING, THE WEARING SURFACE SHALL BE APPLIED NO SOONER THAN SEVEN (7) DAYS AND NO LATER THAN THIRTY (30) DAYS AFTER BASE COMPLETION.

22. ALL CONCRETE PIPE JOINTS SHALL BE WRAPPED IN FILTER FABRIC.

23. ROADWAY MARKING, STRIPING, SIGNS, AND OTHER TRAFFIC CONTROL DEVICES SHALL BE IN ACCORDANCE WITH THE "MANUAL ON UNIFORM TRAFFIC CONTROL DEVICES FOR STREETS AND HIGHWAYS" (MUTCD), INCLUDING SUBSEQUENT REVISIONS AND ADDENDUMS, AS PUBLISHED BY THE USDOT FEDERAL HIGHWAY ADMINISTRATION AS WELL AS FDOT AND LOCAL AGENCY STANDARDS AND SPECIFICATIONS.

24. ALL OFFSITE ROADWAY MARKING/STRIPING MATERIAL SHALL BE THERMOPLASTIC UNLESS OTHERWISE SPECIFIED.

25. ALL ONSITE ROADWAY MARKING/STRIPING MATERIAL SHALL BE PAINT UNLESS OTHERWISE SPECIFIED.

26. REGULATORY SIGNS AND MARKINGS SHALL BE IN PLACE PRIOR TO FINAL INSPECTION OF PAVING AND DRAINAGE IMPROVEMENTS.

27. PAVEMENT RETURN RADII SHALL BE MEASURED TO THE EDGE OF PAVEMENT UNLESS OTHERWISE NOTED.

28. POND SLOPES AND BERMS SHALL BE SODDED TO TWO (2) FEET BELOW THE NORMAL WATER LINE (N.W.L.). IN THE CASE OF DRY BOTTOM PONDS, THE BOTTOM WILL BE SEEDED AND MULCHED UNLESS OTHERWISE SPECIFIED.

29. ALL PRECAST DRAINAGE STRUCTURES TO HAVE STEEL FRAME. ALL STRUCTURES IN PAVED AREAS TO HAVE STEEL RECTILINEAR GRATES WITH H-20 LOADING.

30. CONTRACTOR SHALL NOT COMPACT, STABILIZE, OR CONSTRUCT BASE COURSE WITHIN LANDSCAPE ISLANDS, TRACTS OR MEDIANS. WHERE SUCH TREATMENT DOES OCCUR, IT SHALL BE REMOVED AND REPLACED WITH SUITABLE PLANTING SOILS ACCEPTABLE TO LANDSCAPE ARCHITECT.

31. YARD DRAINS SHALL BE NYLOPLAST INLINE DRAINS AND DRAIN BASINS, OR APPROVED EQUAL, WITH CAST IRON GRATES AND WATERTIGHT ADAPTER CONNECTIONS. DOMED GRATES SHALL BE PROVIDED IN NON-SODDED AREAS.

32. ALL FIRE HYDRANT LOCATIONS SHALL BE MARKED BY PLACING BLUE REFLECTIVE PAVEMENT MARKERS IN THE CENTER OF THE NEAREST TRAVEL LANE.

33. MINIMUM LONGITUDINAL SLOPE OF CURB SHALL BE 0.30% UNLESS SPECIFIED OTHERWISE.

PAVING AND DRAINAGE (CONTINUED)

34. FINISHED FLOOR ELEVATION IS TYPICALLY 8" INCHES ABOVE DESIGN FINISHED GRADE AT OUTSIDE PERIMETER OF BUILDINGS EXCEPT AT ENTRIES AND WHERE OTHERWISE SHOWN.

35. CONTRACTOR SHALL REMOVE ALL MUCK DEPOSITS IN CONSTRUCTION AREAS AND AREAS TO BE FILLED. SEE GEOTECHNICAL REPORT.

36. DRAINAGE MANHOLES AND INLETS (NOT INCLUDING CONTROL STRUCTURES) IN THE PLANS ARE IDENTIFIED BY TOP TYPE ONLY. CONTRACTOR SHALL PROVIDE STANDARD DITCH BOTTOM INLET TOPS AND TYPE 'J' OR 'P' STRUCTURE BOTTOMS, SIZED AS REQUIRED TO ACCOMMODATE PIPE SIZES AND ORIENTATIONS SHOWN. SHOP DRAWINGS SHALL BE SUBMITTED WHICH CLEARLY REPRESENT SUCH DATA.

37. CONTRACTOR SHALL STABILIZE AND PROTECT ALL END WALL, MITERED END SECTION, FLARED END SECTION, ETC. STRUCTURES THROUGHOUT THE PROJECT UNTIL THE BANK SLOPES OF THE RECEIVING WATER BODY ARE STABILIZED AND ACCEPTED BY OWNER.

SANITARY SEWER

1. ROOF DRAINS, FOUNDATION DRAINS OR OTHER STORM WATER CONNECTIONS TO THE SANITARY SEWER ARE PROHIBITED.

2. ALL GRAVITY SEWER MUST BE SDR26 OR BETTER.

3. ALL SANITARY SERVICE LATERALS SHALL BE 6-INCH DIAMETER PVC AND SHALL END WITH A CLEAN OUT.

4. ALL SANITARY SEWER PIPE SHALL BE COLORED GREEN.

5. ALL SANITARY SEWER MANHOLES SHALL HAVE A MINIMUM DIAMETER OF 48-INCHES AND A MINIMUM ACCESS DIAMETER OF 22-INCHES.

6. MINIMUM COVER OVER ALL PIPE SHALL BE 36-INCHES FROM TOP OF PIPE TO FINISHED GRADE, UNLESS OTHERWISE NOTED.

7. FOR HORIZONTAL AND VERTICAL CLEARANCES BETWEEN SANITARY SEWER MAINS/ LATERALS AND WATER MAINS/SERVICES, SEE WATER NOTES ON THIS SHEET AND FDEP SEPARATION TABLE ON UTILITY PLAN.

8. WHERE SOIL REPORT INDICATES THE POSSIBILITY OF UNSUITABLE MATERIAL IN THE VICINITY OF SANITARY LINES, THE CONTRACTOR SHALL DETERMINE THE NATURE AND EXTENT OF THIS UNSUITABLE MATERIAL, PREPARE TRENCH, AND INSTALL THE SEWER LINE IN ACCORDANCE WITH ASTM D-2321. IT WILL BE THE CONTRACTOR'S RESPONSIBILITY TO NOTIFY THE ENGINEER OF THIS UNSUITABLE MATERIAL.

9. THE CONTRACTOR SHALL BE REQUIRED TO PERFORM INFILTRATION OR EXFILTRATION TEST, WHICHEVER IS APPLICABLE. INFILTRATION SHALL NOT EXCEED 50 GALLONS PER DAY PER INCH OF DIAMETER PER MILE OF LENGTH, OR THE COMPUTED EQUIVALENT FOR SHORTER LENGTHS OF TIME. THE CONTRACTOR SHALL MEET ALL REQUIREMENTS, CODES, AND ORDINANCES OF THE WASTEWATER TRANSMISSION AUTHORITY INCLUDING ADVANCED NOTIFICATION PRIOR TO CONSTRUCTION AND TESTING.

10. MADDEN, MOORHEAD & STOKES, LLC SHALL BE NOTIFIED A MINIMUM OF FIVE (5) FULL WORKING DAYS PRIOR TO CONSTRUCTION AND TESTING OF THE SANITARY SEWER, PHONE (407)-629-8330.

11. THE CONTRACTOR SHALL SUPPLY COMPLETE "AS BUILT" INFORMATION RELATIVE TO INVERTS, RIM ELEVATIONS, LOCATION OF MANHOLES AND LENGTHS OF PIPE. LATERALS SHALL BE LOCATED FROM THE CENTERLINE OF THE NEAREST DOWNSTREAM MANHOLE. THE INFORMATION SHALL BE SUBMITTED ON LEGIBLY MARKED-UP PRINTS TO THE ENGINEER WITHIN TWO (2) WEEKS OF COMPLETION OF SEWER CONSTRUCTION.

12. CONTRACTOR SHALL RECEIVE SEWER CERTIFICATION PRIOR TO PLACEMENT OF BASE COURSE.

13. MINIMUM SLOPE ON ALL SANITARY SEWER GRAVITY MAINS SHALL BE IN ACCORDANCE WITH UTILITY PROVIDER'S STANDARDS AND CONSTRUCTION SPECIFICATIONS, LATEST EDITION.

14. ALL SANITARY SERVICE LOCATIONS SHALL BE MARKED BY CUTTING AN "S" INTO THE CURB.

15. ALL LATERALS SHOULD BE RAN UP TO A MINIMUM OF 36" AND HAVE A GLUE CAP.

16. AIR RELEASE VALVES SHALL BE REQUIRED AT ALL HIGH POINTS ALONG THE FORCE MAIN.

17. THE CONTRACTOR IS RESPONSIBLE FOR ENSURING THAT AN EVEN TRANSITION IS MAINTAINED WHERE ASPHALT PAVING ABUTS MANHOLE/VALVE COVERS IN PAVED AREAS. AT EACH OF THESE LOCATIONS THE CONTRACTOR SHALL POUR AN 8-INCH THICK CONCRETE APRON AROUND THE MANHOLE/VALVE COVER A MINIMUM OF 4'x4' AT MANHOLES, AND 2'x2' AT VALVE COVERS LEVEL WITH THE FINAL LIFT OF ASPHALT.

18. PIPE LENGTHS SHOWN REPRESENT SCALED DISTANCES BETWEEN MANHOLE CENTERLINE.

19. INVERTS OF SANITARY SERVICE LATERALS AT THEIR CONNECTION TO SANITARY MANHOLES SHALL BE NO MORE THAN ONE (1) FOOT ABOVE THE MANHOLE INVERT.

20. PRIOR TO PAVING, CONTRACTOR SHALL VERIFY THE AS-BUILT SANITARY SEWER PIPE SLOPES. MINIMUM SLOPES SHALL BE IN ACCORDANCE WITH THE GREATER OF FDEP OR THE UTILITY PROVIDER'S MINIMUM CRITERIA. ANY LINE NOT MEETING MINIMUM SLOPES SHALL BE RELAYED BY CONTRACTOR TO MEET THE MINIMUM SLOPE REQUIREMENT AT NO ADDITIONAL COST.

21. MANHOLE LIFT HOLES AND GRADE ADJUSTMENT RINGS SHALL BE SEALED WITH NON-SHRINKING MORTAR OR OTHER APPROPRIATE MATERIAL.

22. INLET AND OUTLET PIPES SHALL BE JOINED TO THE MANHOLE WITH A GASKETED FLEXIBLE WATER-TIGHT CONNECTION OR ANOTHER WATER-TIGHT CONNECTION ARRANGEMENT THAT ALLOWS DIFFERENTIAL SETTLEMENT OF THE PIPE AND MANHOLE WALL.

23. WATER-TIGHT MANHOLE COVERS SHALL BE USED WHEREVER THE MANHOLE TOPS MAY BE FLOODED BY STREET RUNOFF OF HIGH WATER.

WATER

1. ALL MATERIALS AND CONSTRUCTION REQUIREMENTS FOR THE FIRE SERVICE, WATER LINES, CHECK VALVES, BACKFLOW PREVENTERS, GATE VALVES, ETC., SHALL BE IN ACCORDANCE WITH LOCAL AGENCY STANDARD DETAILS AND CONSTRUCTION SPECIFICATIONS.

2. ALL CONSTRUCTION AND MATERIALS SHALL BE IN COMPLIANCE WITH AWWA STANDARDS AND IN ACCORDANCE WITH LOCAL AGENCY STANDARDS.

3. ALL PUBLIC WATER SYSTEM COMPONENTS, EXCLUDING FIRE HYDRANTS, THAT WILL BE INSTALLED UNDER THIS PROJECT AND THAT WILL COME INTO CONTACT WITH DRINKING WATER WILL CONFORM TO NSF INTERNATIONAL STANDARD 61 AND WILL BE MARKED WITH THE NSF SEAL OF APPROVAL.

4. CONTRACTOR SHALL VERIFY SIZE AND TYPE OF EXISTING MAIN PRIOR TO ORDERING TAPPING MATERIALS FOR TIE-INS.

5. SITE CONTRACTOR SHALL COORDINATE AND VERIFY ALL UTILITY SERVICES WITH FINAL ARCHITECTURAL DRAWINGS AND BUILDING CONTRACTOR.

6. SITE UTILITY WORK SHALL TERMINATE 5-FEET FROM BUILDINGS UNLESS OTHERWISE STATED.

7. MINIMUM COVER OVER ALL PIPE SHALL BE 36-INCHES FROM TOP OF PIPE TO FINISHED GRADE, UNLESS OTHERWISE NOTED.

8. THE WATER MAIN SHALL BE LOCATED ABOVE THE STORMWATER AND SANITARY MAINS AT CONFLICTS, WHERE POSSIBLE.

WATER (CONTINUED)

9. VERTICAL SEPARATION BETWEEN UNDERGROUND POTABLE WATER MAINS AND SANITARY OR STORM SEWERS, WASTEWATER OR STORMWATER FORCE MAINS, AND RECLAIMED WATER PIPELINES:
   - 9.1. NEW OR RELOCATED, UNDERGROUND WATER MAINS CROSSING ANY EXISTING OR PROPOSED GRAVITY- OR VACUUM-TYPE SANITARY SEWER OR STORM SEWER SHALL BE LAID SO THE OUTSIDE OF THE WATER MAIN IS AT LEAST 12 INCHES ABOVE OR BELOW THE OUTSIDE OF THE OTHER PIPELINE. HOWEVER, IT IS PREFERABLE TO LAY THE WATER MAIN ABOVE THE OTHER PIPELINE.
   - 9.2. NEW OR RELOCATED, UNDERGROUND WATER MAINS CROSSING ANY EXISTING OR PROPOSED PRESSURE-TYPE SANITARY SEWER, WASTEWATER OR STORMWATER FORCE MAIN, OR PIPELINE CONVEYING RECLAIMED WATER SHALL BE LAID SO THE OUTSIDE OF THE WATER MAIN IS AT LEAST 12 INCHES ABOVE OR BELOW THE OUTSIDE OF THE OTHER PIPELINE. HOWEVER, IT IS PREFERABLE TO LAY THE WATER MAIN ABOVE THE OTHER PIPELINE.

10. HORIZONTAL SEPARATION BETWEEN UNDERGROUND WATER MAINS AND SANITARY OR STORM SEWERS, WASTEWATER OR STORMWATER FORCE MAINS, RECLAIMED WATER PIPELINES, AND ON-SITE SEWAGE TREATMENT AND DISPOSAL SYSTEMS:
    - 10.1. NEW OR RELOCATED, UNDERGROUND WATER MAINS SHALL BE LAID TO PROVIDE A HORIZONTAL DISTANCE OF AT LEAST THREE FEET BETWEEN THE OUTSIDE OF THE WATER MAIN AND THE OUTSIDE OF ANY EXISTING OR PROPOSED STORM SEWER, STORMWATER FORCE MAIN, OR PIPELINE CONVEYING RECLAIMED WATER REGULATED UNDER PART III OF CHAPTER 62-610, F.A.C.
    - 10.2. NEW OR RELOCATED, UNDERGROUND WATER MAINS SHALL BE LAID TO PROVIDE A HORIZONTAL DISTANCE OF AT LEAST THREE FEET, AND PREFERABLY TEN FEET, BETWEEN THE OUTSIDE OF THE WATER MAIN AND THE OUTSIDE OF ANY EXISTING OR PROPOSED VACUUM-TYPE SANITARY SEWER.
    - 10.3. NEW OR RELOCATED, UNDERGROUND WATER MAINS SHALL BE LAID TO PROVIDE A HORIZONTAL DISTANCE OF AT LEAST SIX FEET, AND PREFERABLY TEN FEET, BETWEEN THE OUTSIDE OF THE WATER MAIN AND THE OUTSIDE OF ANY EXISTING OR PROPOSED GRAVITY- OR PRESSURE-TYPE SANITARY SEWER, WASTEWATER FORCE MAIN, OR PIPELINE CONVEYING RECLAIMED WATER NOT REGULATED UNDER PART III OF CHAPTER 62-610, F.A.C. THE MINIMUM HORIZONTAL SEPARATION DISTANCE BETWEEN WATER MAINS AND GRAVITY-TYPE SANITARY SEWERS SHALL BE REDUCED TO THREE FEET WHERE THE BOTTOM OF THE WATER MAIN IS LAID AT LEAST SIX INCHES ABOVE THE TOP OF THE SEWER.
    - 10.4. NEW OR RELOCATED, UNDERGROUND WATER MAINS SHALL BE LAID TO PROVIDE A HORIZONTAL DISTANCE OF AT LEAST TEN FEET BETWEEN THE OUTSIDE OF THE WATER MAIN AND ALL PARTS OF ANY EXISTING OR PROPOSED "ON-SITE SEWAGE TREATMENT AND DISPOSAL SYSTEM" AS DEFINED IN SECTION 381.0065(2), F.S., AND RULE 64E-6.002, F.A.C.

11. AT THE UTILITY CROSSINGS DESCRIBED IN NOTES 8 AND 9 ABOVE, ONE FULL LENGTH OF WATER MAIN PIPE SHALL BE CENTERED ABOVE OR BELOW THE OTHER PIPELINE SO THE WATER MAIN JOINTS WILL BE AS FAR AS POSSIBLE FROM THE OTHER PIPELINE. ALTERNATIVELY, AT SUCH CROSSING, THE PIPES SHALL BE ARRANGED SO THAT ALL WATER MAIN JOINTS ARE AT LEAST THREE FEET FROM ALL JOINTS IN VACUUM-TYPE SANITARY SEWERS, STORM SEWERS, STORMWATER FORCE MAINS, OR PIPELINES CONVEYING RECLAIMED WATER REGULATED UNDER PART III OF CHAPTER 62-610, F.A.C., AND AT LEAST SIX FEET FROM ALL JOINTS IN GRAVITY-OR PRESSURE-TYPE SANITARY SEWERS, WASTEWATER FORCE MAINS, OR PIPELINES CONVEYING RECLAIMED WATER NOT REGULATED UNDER PART III OF CHAPTER 62-610, F.A.C.

12. WATER LINES 2-INCHES, OR LESS, IN DIAMETER SHALL BE POLYETHYLENE TUBING.

13. WATER LINES 4-INCH TO 12-INCH IN DIAMETER SHALL BE NSF LOGO PVC PIPE CONFORMING TO AWWA C-900 AND BE DR-18.

14. ALL FITTINGS SHALL BE DUCTILE IRON (D.I.) OR GRAY IRON MECHANICAL JOINTS WITH A MINIMUM PRESSURE RATING OF 250 P.S.I. CONFORMING TO ANSI A-21.10 / AWWA C-110, OR D.I. COMPACT FITTINGS FOR DIAMETERS 4-INCH TO 12-INCH CONFORMING TO ANSI A-21.53 / AWWA C-153.

15. FROM THE POINT OF SERVICE (P.O.S.) FORWARD AS DESIGNATED BY F.S. 633, FIRE SUPPLY PIPE SHALL BE DR-14 AND TESTED AT 200 PSI FOR TWO HOURS.

16. GATE VALVES SHALL CONFORM TO AWWA C-509-87, WITH WRENCH NUT EXTENSION STEMS AND OTHER APPURTENANCES AS REQUIRED AND SHALL BE IRON BODY, FULL BRONZE MOUNTED, DOUBLE DISK, PARALLEL SEAT, NON-RISING STEM VALVES WITH O-RING SEALS AND END CONNECTIONS AS CALLED FOR ON THE PLANS. ALL TEES, CAPS, PLUGS, BENDS, VALVES, ETC., SHALL BE PROVIDED WITH GRIP RING RESTRAINTS.

17. ALL NON-METALLIC WATER MAINS SHALL BE INSTALLED WITH A CONTINUOUS, INSULATED 10 GAUGE COPPER WIRE INSTALLED DIRECTLY ON TOP OF THE PIPE FOR LOCATION PURPOSES. IN ADDITION, ALL PVC WATER MAINS SHALL BE A SOLID BLUE COLOR. ALL LETTERING SHALL APPEAR LEGIBLY ON PIPE AND SHALL RUN THE ENTIRE LENGTH OF THE PIPE. LETTERING SHALL READ AS IS ACCEPTABLE FOR THE INTENDED USE.

18. SERVICE MAINS FOR FIRE HYDRANTS SHALL BE INSTALLED IN ACCORDANCE WITH NFPA 24, LATEST EDITION.

19. NEW FIRE HYDRANTS SHALL BE INSTALLED SO THAT 5-1/4" INCH PORT IS FACING THE ROADWAY BY WHICH IT IS ACCESSED. HYDRANTS SHALL BE POSITIONED NOT MORE THAN 5 FEET AWAY FROM THE CURB OR BERM OF THE ROADWAY.

20. HYDROSTATIC TESTING AND THE DISINFECTION OF THE WATER DISTRIBUTION SYSTEM SHALL BE DONE IN ACCORDANCE WITH AWWA STANDARDS. HYDROSTATIC TESTING TO BE DONE IN ACCORDANCE WITH AWWA C-600 FOR DUCTILE IRON PIPE AND C-605 FOR PVC PIPE. DISINFECTING AND BACTERIOLOGICAL EVALUATION TO BE DONE IN ACCORDANCE WITH AWWA C-651 AND RULE 62-555.340 F.A.C.

21. THE CONTRACTOR SHALL SUPPLY COMPLETE AS-BUILT INFORMATION RELATIVE TO LOCATION AND ELEVATION OF ALL WATER LINES AND SERVICES. THE INFORMATION SHALL BE SUBMITTED ON LEGIBLY MARKED-UP PRINTS TO THE ENGINEER WITHIN TWO (2) WEEKS OF THE COMPLETION OF THE WATER LINE CONSTRUCTION.

22. CONTRACTOR SHALL COORDINATE ALL UTILITIES SYSTEMS TEST SCHEDULING TO ALLOW ENGINEER'S ATTENDANCE PROVIDING MINIMUM NOTICE OF FIVE (5) WORKING DAYS. CONTRACTOR'S FAILURE TO PROPERLY NOTIFY ENGINEER MAY RESULT IN RETESTING AT ENGINEER'S OPTION AND AT CONTRACTOR'S EXPENSE.

23. NEW HYDRANTS SHALL BE TESTED AND IN PROPER WORKING ORDER WITH DOCUMENTATION SUPPLIED TO THE FIRE MARSHAL PRIOR TO ANY COMBUSTIBLE CONSTRUCTION. (I.E. FIRE FLOW TEST SHALL BE PERFORMED)

24. DEFLECTIONS AT PIPE JOINTS SHALL NOT EXCEED THE LESSOR OF THOSE RECOMMENDED BY THE PIPE MANUFACTURER OR UTILITY PROVIDER'S CONSTRUCTION SPECIFICATIONS.

25. ALL PIPE AND PIPE FITTINGS INSTALLED UNDER THIS PROJECT SHALL BE COLOR CODED IN ACCORDANCE WITH SUB PARAGRAPH 62-555.320(21)(B)3, F.A.C. USING BLUE AS A PREDOMINANT COLOR. ALL DUCTILE IRON WATER MAINS SHALL BE MARKED WITH A CONTINUOUS STRIPE LOCATED WITHIN THE TOP 90 DEGREES OF THE PIPE. SAID STRIPE SHALL BE A MINIMUM 2 INCHES IN WIDTH AND SHALL BE BLUE IN COLOR. BACKFILL SHALL NOT BE PLACED FOR 30 MINUTES FOLLOWING PAINT APPLICATION. FOR PIPE WITH AN INTERNAL DIAMETER OF 24" OR GREATER, TAPE OR PAINT SHALL BE APPLIED IN CONTINUOUS LINES A LONG EACH SIDE OF THE PIPE AS WELL AS ALONG THE TOP OF THE PIPE.

26. MARK RESIDENTIAL SERVICES WITH 6-FOOT HIGH PIECE OF 2"x4" PLANK PAINTED BLUE WITH LOT NUMBER CLEARLY MARKED AND A 'W' IMPRESSED IN THE CURB. IT IS THE INTENT THAT EVERY LOT IS PROVIDED WITH A WATER SERVICE; THEREFORE IT IS THE CONTRACTOR'S RESPONSIBILITY TO INSTALL A WATER SERVICE TO EACH LOT.

WATER (CONTINUED)

27. PIPE MATERIALS:
    PVC MAINS - ALL PIPE, PIPE FITTINGS, PIPE JOINT PACKING AND JOINTING MATERIALS, VALVES, FIRE HYDRANTS, AND METERS INSTALLED UNDER THIS PROJECT SHALL CONFORM TO APPLICABLE AWWA STANDARDS AND SHALL BE MANUFACTURED IN ACCORDANCE WITH AWWA STANDARD C900, LATEST EDITION. PVC SHALL BE MANUFACTURED IN ACCORDANCE WITH AWWA STANDARD C900. THE PVC SHALL HAVE A MINIMUM WORKING PRESSURE OF 150 P.S.I. AND SHALL HAVE A DIMENSION RATIO (DR) OF 18. PIPE SHALL BE THE SAME O.D. AS DUCTILE IRON PIPE.
    PVC JOINTS - SHALL BE IN ACCORDANCE WITH ASTM D3139.
    DUCTILE IRON MAINS - SHALL CONFORM TO ANSI/AWWA C150/C151. A MINIMUM OF CLASS 50 PIPE SHALL BE SUPPLIED.
    DUCTILE IRON JOINTS - SHALL BE IN ACCORDANCE WITH ANSI A21.11 AND AWWA C111.
    SERVICES - SHALL BE IN ACCORDANCE WITH AWWA C901/C800 STANDARDS FOR POLYETHYLENE TUBING, CLASS 160.

28. WATER MAIN CONNECTION SHALL BE MADE UNDER THE SUPERVISION OF THE UTILITY PROVIDER. ALL VALVES SHALL BE OPERATED BY UTILITY PROVIDER PERSONNEL ONLY.

29. ALL PIPE AND PIPE FITTINGS INSTALLED UNDER THIS PROJECT SHALL CONTAIN NO MORE THAN 8.0% LEAD, AND ANY SOLDER OR FLUX USED IN THIS PROJECT SHALL CONTAIN NO MORE THAN 0.2% LEAD.

30. NEW OR ALTERED FIRE HYDRANT LEADS SHALL HAVE A MINIMUM INSIDE DIAMETER OF 6-INCH AND SHALL INCLUDE AN AUXILIARY VALVE.

31. A CONTINUOUS AND UNIFORM BEDDING WILL BE PROVIDED IN TRENCHES FOR UNDERGROUND PIPE INSTALLED UNDER THIS PROJECT; BACKFILL MATERIAL WILL BE TAMPED IN LAYERS AROUND UNDERGROUND PIPE INSTALLED UNDER THIS PROJECT AND TO A SUFFICIENT HEIGHT ABOVE THE PIPE TO ADEQUATELY SUPPORT AND PROTECT THE PIPE; AND UNSUITABLY SIZED STONES (AS DESCRIBED IN APPLICABLE AWWA STANDARDS OR MANUFACTURERS' RECOMMENDED INSTALLATION PROCEDURES) FOUND IN TRENCHES WILL BE REMOVED FOR A DEPTH OF A LEAST SIX INCHES BELOW THE BOTTOM OF UNDERGROUND PIPE INSTALLED UNDER THIS PROJECT.

32. CONTRACTOR SHALL NOT ACTIVATE WATER SERVICE UNTIL FDEP HAS CLEARED THE SYSTEM FOR USE AND THE CLEARANCE LETTER HAS BEEN RECEIVED BY THE OWNER.

33. ENGINEER RESERVES THE RIGHT TO WITHHOLD AUTHORIZATION OF PAYMENT FOR ANY PORTION OF THE UTILITIES PIPE WORK WHICH HAS NOT BEEN TESTED, OBSERVED BY ENGINEER, AND REPORTED TO CONFORM TO PROJECT SPECIFICATIONS.

FIRE

THE 7TH EDITION OF THE FLORIDA FIRE PREVENTION CODE IS HEREBY INCORPORATED
NFPA 1, 2018 EDITION
NFPA 13, 2016 EDITION
NFPA 14, 2016 EDITION
NFPA 24, 2016 EDITION
NFPA 101, 2018 EDITION

DEMOLITION NOTES

1. EXISTING UNDERGROUND UTILITIES, UNLESS OTHERWISE NOTED, MAY BE CAPPED/PLUGGED AND ABANDONED IN PLACE EXCEPT WITHIN 30 FT. OF BUILDING. CAPPED AND PLUGGED PIPE ENDS SHALL BE ENCASED IN CONCRETE, 6" MINIMUM THICKNESS AROUND PIPE. MANHOLE BASES MAY BE LEFT IN PLACE PROVIDED THAT PIPE OPENINGS ARE PLUGGED AND REMAINING BASES ARE FILLED WITH CONCRETE 6" MINIMUM ABOVE HIGHEST INVERT.

2. CONTRACTOR SHALL BE KNOWLEDGEABLE OF THE CONSTRUCTION DOCUMENTS AND BE RESPONSIBLE FOR PROTECTING ANY EXISTING FACILITY SO DESIGNATED OR DESIGNATED TO BE UTILIZED IN THE WORK.

3. CONTRACTOR SHALL REMOVE ALL FOUNDATIONS, CONCRETE SLABS, AND UNDERGROUND STRUCTURES EXISTING ON THE SITE AT THE TIME OF BIDDING UNLESS OTHERWISE DIRECTED.

4. CONTRACTOR SHALL COORDINATE WITH APPLICABLE UTILITY COMPANIES AND BE RESPONSIBLE FOR THE TERMINATION, CAPPING-OFF AND REMOVAL OF ALL UNDERGROUND AND ABOVE-GROUND UTILITY SERVICES EXISTING AT THE TIME OF BIDDING UNLESS DIRECTED TO BID OTHERWISE.

5. CONTRACTOR IS RESPONSIBLE FOR IDENTIFYING AND DISPOSING ALL WASTE MATERIALS CONSISTENT WITH ALL RULES AND REGULATIONS APPLICABLE TO THE SPECIFIC MATERIAL FOUND.

SPECIAL PURPOSE

1. THE EXISTENCE AND LOCATION OF ANY OVERHEAD OR UNDERGROUND UTILITY LINES, PIPES, OR STRUCTURES SHOWN ON THESE PLANS ARE OBTAINED BY A RESEARCH OF THE AVAILABLE RECORDS. THE CONTRACTOR SHALL TAKE ALL NECESSARY PRECAUTIONS TO AVOID DAMAGE TO SAME. THE CONTRACTOR SHALL USE EXTREME CAUTION WHEN WORKING NEAR OVERHEAD UTILITIES SO AS TO SAFELY PROTECT ALL PERSONNEL AND EQUIPMENT AND SHALL BE RESPONSIBLE FOR ALL COST AND LIABILITY IN CONNECTION THEREWITH.

MADDEN
MOORHEAD & STOKES, LLC
CIVIL ENGINEERS
431 E. Horatio Avenue
Suite 260
Maitland, Florida 32751
(407) 629-8330
CA# 0007723

GENERAL NOTES
FOR
LAKE HILLS SHOPPING CENTER
TOWN OF HOWEY IN THE HILLS FLORIDA

WINDCREST DEVELOPMENT GROUP, INC.
605 E. ROBINSON ST. SUITE 340
ORLANDO, FL 32801
407-219-3540

	DATE	REVISIONS
1		
2		
3		
4		
5		
6		
7		
8		
9		
10		
11		

BENJAMIN S. BECKHAM
LICENSE
NO. 79452
STATE OF FLORIDA
PROFESSIONAL ENGINEER

This item has been digitally signed and sealed by Benjamin S. Beckham, PE on the date adjacent to the seal.

Printed copies of this document are not considered signed and sealed and the signature must be verified on any electronic copies.

ENGINEER OF RECORD

JOB #: 22041
DATE: 08/06/24
DATUM: NAVD 88
DESIGNED BY: KGS
DRAWN BY: JAS
APPROVED BY: BSB

C002

THESE DOCUMENTS AND THEIR CONTENTS ARE THE PROPERTY OF MADDEN, MOORHEAD & STOKES, LLC. AND ARE ISSUED ONLY FOR THE SPECIFIC PROJECT NOTED ON THESE DRAWINGS. ANY REPRODUCTIONS, REVISIONS OR MODIFICATIONS OF THESE DOCUMENTS WITHOUT THE EXPRESSED WRITTEN CONSENT OF MADDEN, MOORHEAD & STOKES, LLC. IS PROHIBITED BY LAW.

H:\Data\22MMS0410-Lake Harris Publix\Eng\Final\22041-C002 GENERAL NOTES.dwg January 10, 2025 2:20 PM

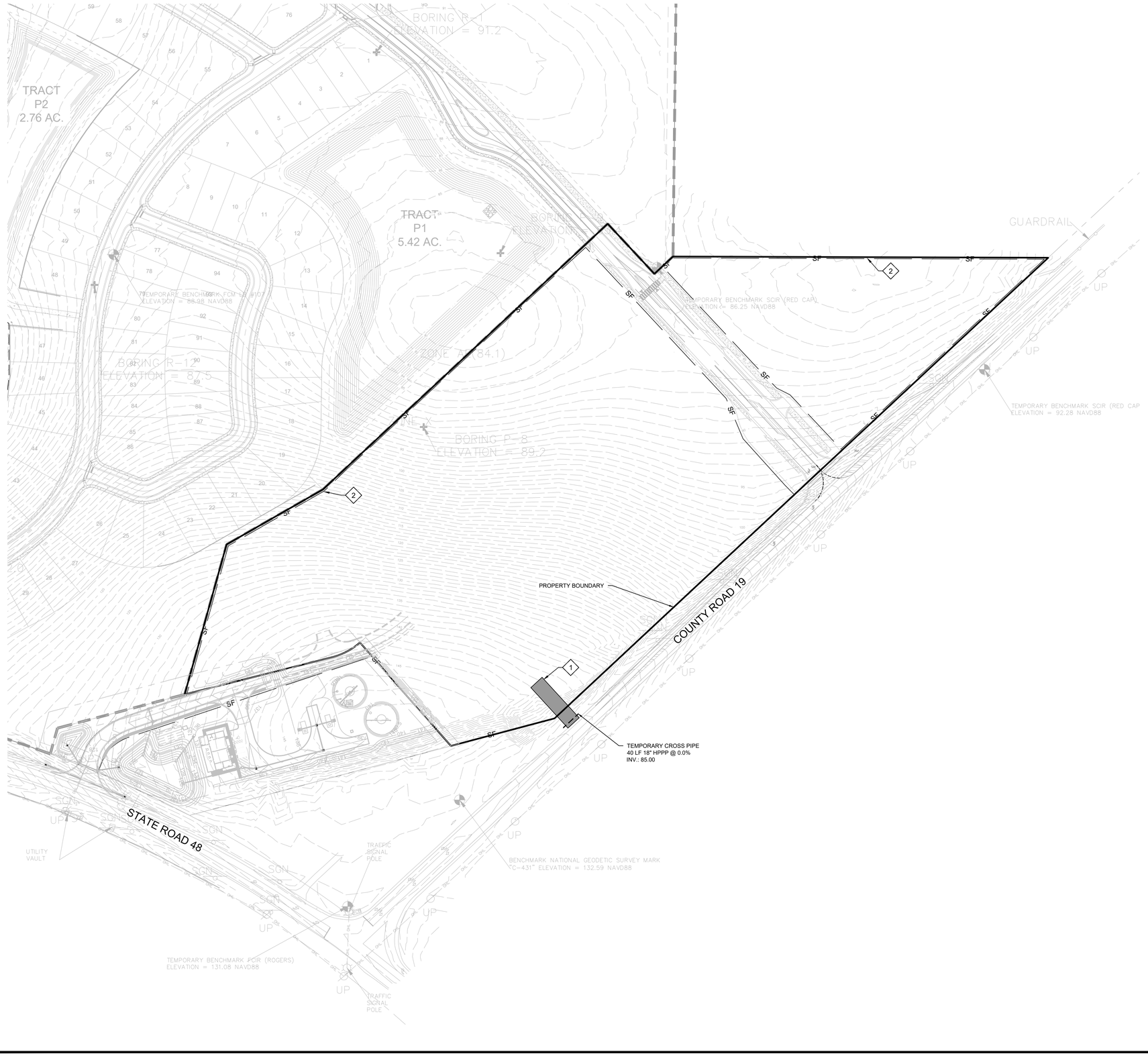

N
W E
S

0 50' 100' 200'
SCALE: 1"=100'

LEGEND

SF	STAKED EROSION CONTROL FENCE
	PROPERTY BOUNDARY

DEMOLITION NOTES

1. TEMPORARY CONSTRUCTION ENTRANCE (SEE DETAIL ON SHEET C008)
2. SINGLE STAKED SILT FENCE.

NOTES:

1. DROP INLET SEDIMENT BARRIERS ARE TO BE USED FOR SMALL, NEARLY LEVEL DRAINAGE AREAS. (LESS THAN 5%)
2. THE TOP OF STRUCTURE (PONDING HEIGHT) MUST BE WELL BELOW THE GROUND ELEVATION DOWNSLOPE TO PREVENT RUNOFF FROM BYPASSING THE INLET. EXCAVATION OF A BASIN ADJACENT TO THE DROP INLET OR A TEMPORARY DIKE ON THE DOWNSLOPE OF THE STRUCTURE MAY BE NECESSARY.
3. ALL SILT FENCE INSTALLED TO BE FDOT TYPE III.
4. WATER TRUCK SHALL BE ONSITE DURING CONSTRUCTION TO KEEP DUST LEVEL AT A MINIMUM. (OR USE OTHER METHODOLOGY FOR DUST ABATEMENT/CONTROL APPROVED BY COUNTY)

MADDEN
MOORHEAD & STOKES, LLC
CIVIL ENGINEERS
431 E. Horatio Avenue
Suite 260
Maitland, Florida 32751
(407) 629-8330
CA# 0007723

SWPPP & DEMOLITION PLAN
FOR
LAKE HILLS SHOPPING CENTER
TOWN OF HOWEY IN THE HILLS FLORIDA

WINDCREST DEVELOPMENT GROUP, INC.
605 E. ROBINSON ST. SUITE 340
ORLANDO, FL 32801
407-219-3540

	DATE	REVISIONS
1		
2		
3		
4		
5		
6		
7		
8		
9		
10		
11		

BENJAMIN S. BECKHAM
LICENSE
NO. 79452
STATE OF FLORIDA
PROFESSIONAL ENGINEER

This item has been digitally signed and sealed by Benjamin S. Beckham, PE on the date adjacent to the seal.

Printed copies of this document are not considered signed and sealed and the signature must be verified on any electronic copies.

ENGINEER OF RECORD

JOB #	22041
DATE:	08/06/24
DATUM:	NAVD 88
DESIGNED BY:	KGS
DRAWN BY:	JAS
APPROVED BY:	BSB

C007

THESE DOCUMENTS AND THEIR CONTENTS ARE THE PROPERTY OF MADDEN, MOORHEAD & STOKES, LLC. AND ARE ISSUED ONLY FOR THE SPECIFIC PROJECT NOTED ON THESE DRAWINGS. ANY REPRODUCTIONS, REVISIONS OR MODIFICATIONS OF THESE DOCUMENTS WITHOUT THE EXPRESSED WRITTEN CONSENT OF MADDEN, MOORHEAD & STOKES, LLC. IS PROHIBITED BY LAW.

H:\Data\22\MMS\0410-Lake Hams Public\Eng\Final\22041-C008-EROS AND DEMO PLAN.dwg January 10, 2025 2:20 PM

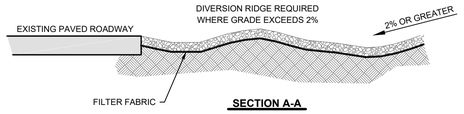

SECTION A-A

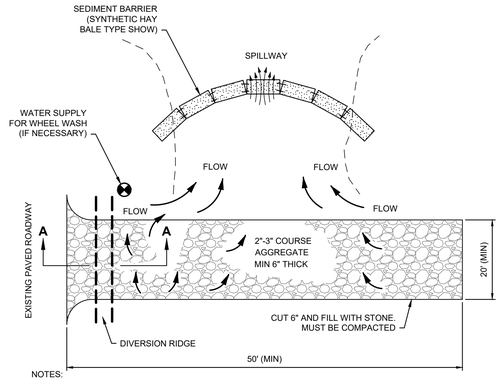

NOTES:

1. THE ENTRANCE SHALL BE MAINTAINED IN A CONDITION THAT WILL PREVENT TRACKING OR FLOWING OF SEDIMENT ONTO PUBLIC RIGHTS-OF WAY OR STORM WATER SYSTEMS. THEY MAY REQUIRE TOP DRESSING, REPAIR AND/OR CLEANOUT OF ANY MEASURES USED TO TRAP SEDIMENT.
2. WHEN NECESSARY, WHEELS SHALL BE CLEANED PRIOR TO ENTRANCE INTO THE PUBLIC RIGHT-OF-WAY.
3. WHEN WASHING IS REQUIRED, IT SHALL BE DONE ON AN AREA STABILIZED WITH CRUSHED STONE THAT DRAINS INTO AN APPROVED SEDIMENT TRAP OR SEDIMENT BASIN.

TEMPORARY CONSTRUCTION ENTRANCE (CE)

NTS

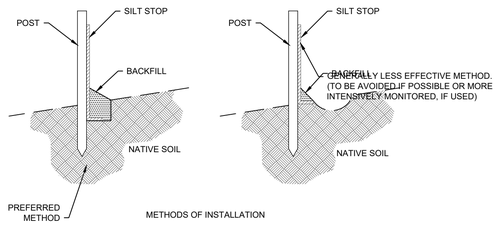

METHODS OF INSTALLATION

NOTE:

SILT FENCE TO BE PAID FOR UNDER THE CONTRACT UNIT PRICE FOR STAKED SILT FENCE (LF).

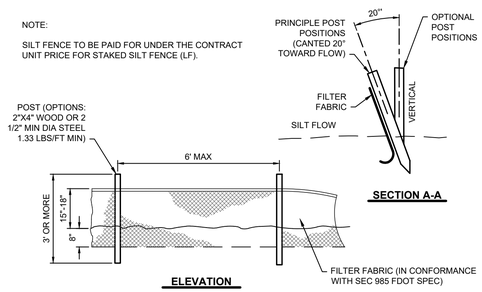

SECTION A-A

ELEVATION

NOTE:

THE EROSION BARRIER, AS SHOWN, IS NOT TO BE CONSTRUED TO MEAN THAT IT IS ALL THAT MAY BE REQUIRED. THE CONTRACTOR IS TO TAKE WHATEVER MEASURES NECESSARY TO CONTROL EROSION THROUGHOUT THE PROJECT. EROSION CONTROL WILL BE INSTALLED PRIOR TO LAND CLEARING AND SHALL REMAIN IN PLACE UNTIL THE AREA IS STABILIZED. (SEE OTHER EROSION AND TURBIDITY NOTES ON THE GENERAL NOTES SHEET OF THIS PLAN SET.)

STAKED EROSION CONTROL (SILT FENCE) (SF)

NTS

NOTES:

1. DROP INLET SEDIMENT BARRIERS ARE TO BE USED FOR SMALL, NEARLY LEVEL DRAINAGE AREAS. (LESS THAN 5%)
2. THE TOP OF STRUCTURE (PONDING HEIGHT) MUST BE WELL BELOW THE GROUND ELEVATION DOWNSLOPE TO PREVENT RUNOFF FROM BYPASSING THE INLET. EXCAVATION OF A BASIN ADJACENT TO THE DROP INLET OR A TEMPORARY DIKE ON THE DOWNSLOPE OF THE STRUCTURE MAY BE NECESSARY.
3. ALL EXISTING INLETS LOCATED ON EXISTING ROAD TO HAVE INLET PROTECTION DURING CONSTRUCTION.
4. ALL SILT FENCE INSTALLED (SINGLE OR DOUBLE) TO BE FDOT TYPE III.
5. WATER TRUCK SHALL BE ONSITE DURING CONSTRUCTION TO KEEP DUST LEVEL AT A MINIMUM. (OR USE OTHER METHODOLOGY FOT DUST ABATEMENT/CONTROL APPROVED BY COUNTY)
6. IF CONTRACTOR PERFORMS ANY WORK 100 FT OF THE EXISTING WETLAND DOUBLE ROW SILT FENCE TO BE INSTALLED.

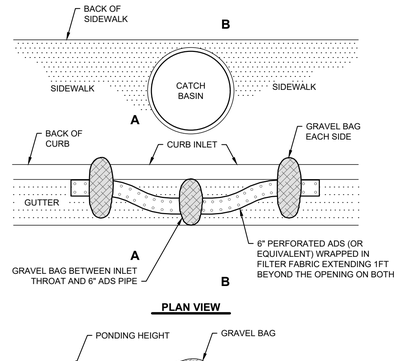

PLAN VIEW

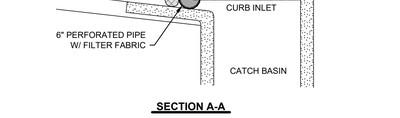

SECTION A-A

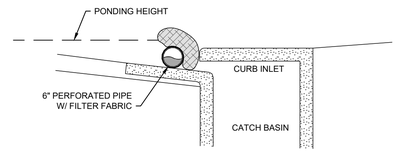

SECTION B-B

CURB INLET SEDIMENT BARRIER (CIP)

NTS

(INLET PROTECTION)

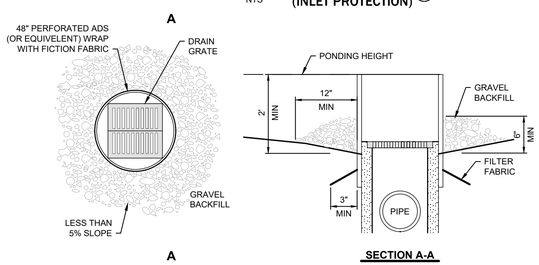

SECTION A-A

NOTES:

1. USE PIPE AND GRAVEL TYPE SEDIMENT BARRIER WHEN CURB INLET IS LOCATED IN GENTLY SLOPING STREET SEGMENT, WHERE WATER CAN POND AND ALLOW SEDIMENT TO SEPARATE FROM RUNOFF.
2. BARRIER SHALL ALLOW FOR OVERFLOW FROM SEVERE STORM EVENT.
3. INSPECT BARRIERS AND REMOVE SEDIMENT AFTER EACH STORM EVENT. SEDIMENT AND GRAVEL MUST BE REMOVED FROM THE TRAVELED WAY IMMEDIATELY.

DROP INLET SEDIMENT BARRIER (IP)

NTS

(INLET PROTECTION)

MADDEN
MOORHEAD & STOKES, LLC
CIVIL ENGINEERS
431 E. Horatio Avenue
Suite 260
Maitland, Florida 32751
(407) 629-8330
CA# 0007723

SWPPP & DEMOLITION PLAN

FOR

LAKE HILLS SHOPPING CENTER

FLORIDA

TOWN OF HOWEY IN THE HILLS

WINDCREST DEVELOPMENT GROUP, INC.
605 E. ROBINSON ST. SUITE 340
ORLANDO, FL 32801
407-219-3540

	DATE	REVISIONS
1	07/25/24	REVISED PER CITY OF LEESBURG COMMENTS
2		
3		
4		
5		
6		
7		
8		
9		
10		
11		

BENJAMIN S. BECKHAM
LICENSE
NO. 79452
STATE OF FLORIDA
PROFESSIONAL ENGINEER

This item has been digitally signed and sealed by Benjamin S. Beckham, PE on the date adjacent to the seal.

Printed copies of this document are not considered signed and sealed and the signature must be verified on any electronic copies.

ENGINEER OF RECORD

JOB # 22041
DATE: 08/06/24
DATUM: NAVD 88
DESIGNED BY: KGS
DRAWN BY: JAS
APPROVED BY: BSB

C008

THESE DOCUMENTS AND DESIGNS ARE THE PROPERTY OF MADDEN, MOORHEAD & STOKES, LLC AND ARE NOT TO BE USED IN WHOLE OR IN PART FOR ANY OTHER PROJECT WITHOUT THE WRITTEN AUTHORIZATION OF MADDEN, MOORHEAD & STOKES, LLC. © COPYRIGHT 2024 MADDEN, MOORHEAD & STOKES, LLC. ALL RIGHTS RESERVED.

H:\Data\22041\Civil\10-Lake Hams Pointe\Eng\Final\22041-C008-EROS AND DEMO PLAN.dwg January 19, 2025 2:29 PM

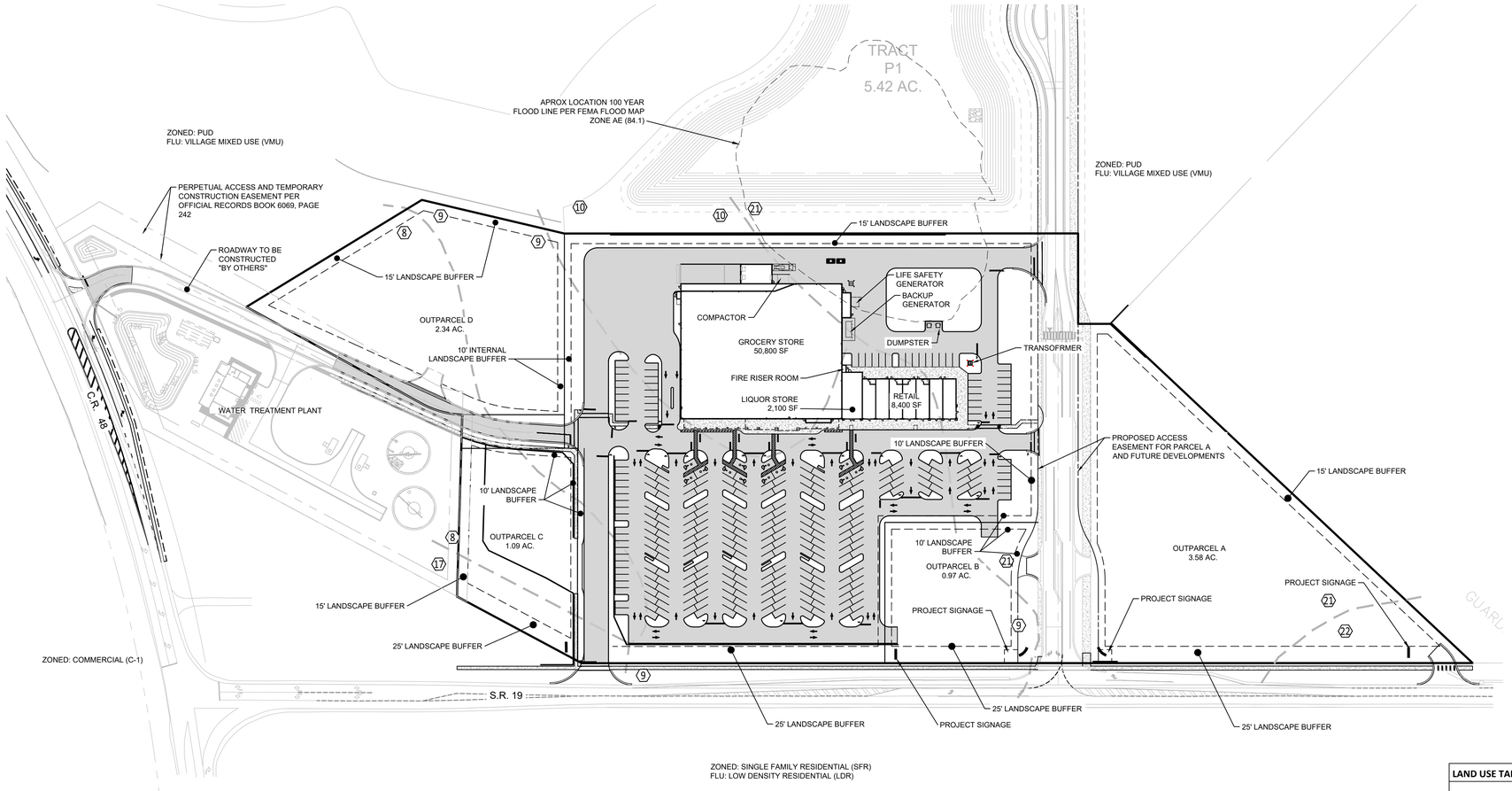

0 50' 100' 200'

SCALE: 1"=100'

SOILS LEGEND

SOIL NUMBER	SOIL NAME	HYDROLOGIC GROUP
8	CANDLER SANDS (0%-5% SLOPE)	A
9	CANDLER SANDS (5%-12% SLOPE)	A
10	CANDLER SANDS (12%-40% SLOPE)	A
21	LAKE SANDS (0%-5% SLOPE)	A
22	LAKE SANDS (5%-12% SLOPE)	A

SOURCE: USDA, NATURAL RESOURCE CONSERVATION SERVICE, SEMINOLE COUNTY, FLORIDA 2020

SITE DATA:

1.	**PARCEL ID:**	23-20-25-0002-000-01100
2.	**JURISDICTION:**	HOWEY-IN-THE-HILLS
3.	**ZONING:**	PUD
4.	**GROSS SITE AREA:**	18.43 ACRES ±
5.	**TOTAL BUILDING S.F.:**	61,300 SF
6.	**FLOOR AREA RATIO:**	
	MAXIMUM:	0.23 (PER OVERALL PD)
	PROPOSED:	0.08 F.A.R.
7.	MAX BUILDING HEIGHT:	35 FT (45 FT FOR PARAPETS, TOWERS, ETC.)
8.	PARKING:	
	REQUIRED:	306 SPACES
		5 SPACES PER 1,000SF OF BUILDING. AREA
		(61,300 SF / 1,000 SF) * 5 = 306 SPACES MIN.
	PROVIDED:	306 SPACES PROVIDED
9.	**OPEN SPACE:**	
	REQUIRED:	25%
	PROVIDED:	2AC
10.	DEDICATIONS & RESERVATIONS:	1.13 AC TO BE DEDICATED AS PUBLIC RIGHT-OF-WAY

LAND USE TABLE

LAND USE ID	OWNERSHIP	MAINTENANCE	AREA (SF)	AREA (AC)	AREA (%)	OPEN SPACE (AC)
GROCERY RETAIL	PRIVATE	PRIVATE	397,805.8001	9.13	49.56%	
OUTPARCEL A	PRIVATE	PRIVATE	155,771.8991	3.58	19.41%	0.90
OUTPARCEL B	PRIVATE	PRIVATE	42,387.7999	0.97	5.28%	0.24
OUTPARCEL C	PRIVATE	PRIVATE	47,569.7925	1.09	5.93%	0.27
OUTPARCEL D	PRIVATE	PRIVATE	102,057.3022	2.34	12.72%	0.59
SHARED ENTRANCE ROAD	PRIVATE	PRIVATE	7,675.3821	0.18	0.96%	
PUBLIC RIGHT-OF-WAY	PRIVATE	PRIVATE	49,343.3378	1.13	6.15%	
TOTAL			**802,611.3137**	**18.43**	**100.00%**	**2.00**

Trip Generation Summary

ITE Code	Land Use	Size	Daily Rate	Daily Trips	AM Peak Hour Rate	AM Total	AM Enter	AM Exit	PM Peak Hour Rate	PM Total	PM Enter	PM Exit
251	Senior Housing Single-Family	475 DU	4.31	2,047	0.27	127	42	85	0.31	150	91	59
252	Senior Housing Multifamily	125 DU	3.24	405	0.20	25	9	16	0.25	31	18	13
821	Shopping Plaza (40-150 KSF)	92.3 KSF	94.49	8,721	3.53	326	202	124	9.03	833	400	433
851	Convenience Store	5.0 KSF	762.28	3,811	62.54	313	156	157	49.11	246	125	121
934	Fast Food Restaurant with Drive-Thru	5.0 KSF	467.48	2,337	44.61	223	114	109	33.03	165	86	79
	Total Gross Trip Generation			17,322		1,014	523	491		1,425	720	705
	Internal Capture (Daily - 18.26%, AM -15.2%, PM - 21.4%)			*3,163*		*154*	*79*	*75*		*304*	*154*	*150*
	External Trips			14,159		860	444	416		1,121	566	555
	Retail Pass-by (40%)			2,852		111	69	42		262	126	136
	Convenience Pass-by (51%)			1,589		135	68	67		98	50	48
	Fast-Food Pass-by (49%)			936		93	47	46		64	33	31
	Total Pass-by			5377		339	184	155		424	209	215
	Total Net New External Trip Generation			**8,782**		**521**	**260**	**261**		**697**	**357**	**340**

ITE Trip Generation Manual, 11TH Edition
ITE equations were used as R^2 were greater than 0.75 and with more than 20 studies

MADDEN
MOORHEAD & STOKES, LLC
CIVIL ENGINEERS
431 E. Horatio Avenue
Suite 260
Maitland, Florida 32751
(407) 629-8330
CA# 0007723

MASTER SITE PLAN
FOR
LAKE HILLS SHOPPING CENTER
TOWN OF HOWEY IN THE HILLS FLORIDA

WINDCREST DEVELOPMENT GROUP, INC.
605 E. ROBINSON ST. SUITE 340
ORLANDO, FL 32801
407-219-3540

#	DATE	REVISIONS
1		
2		
3		
4		
5		
6		
7		
8		
9		
10		
11		

BENJAMIN S. BECKHAM LICENSE NO. 79452 STATE OF FLORIDA PROFESSIONAL ENGINEER

This item has been digitally signed and sealed by Benjamin S. Beckham, PE on the date adjacent to the seal.

Printed copies of this document are not considered signed and sealed and the signature must be verified on any electronic copies.

ENGINEER OF RECORD

JOB # 22041
DATE: 08/06/24
DATUM: NAVD 88
DESIGNED BY: KGS
DRAWN BY: JAS
APPROVED BY: BSB

C009

THESE DOCUMENTS AND DESIGNS ARE AND SHALL REMAIN THE PROPERTY OF MADDEN, MOORHEAD & STOKES, LLC AND SHALL NOT BE REUSED, PUBLISHED OR REPRODUCED IN ANY FORM WITHOUT THE EXPRESSED WRITTEN CONSENT OF MADDEN, MOORHEAD & STOKES, LLC. © 2024 MADDEN, MOORHEAD & STOKES, LLC

H:\Data\22\MD\0415-Lake Hams Pointe\Eng\Final\22041-C009 MASTER SITE PLAN.dwg January 10, 2025 2:21 PM

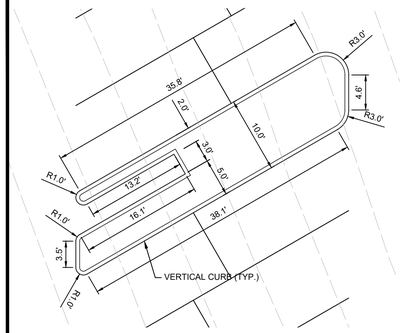

ISLAND DETAIL "A"
1" = 10'.

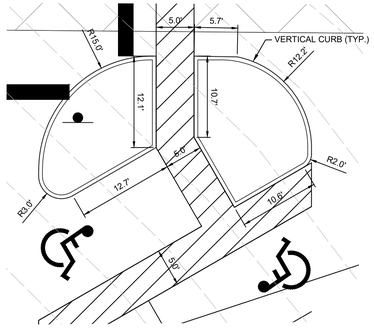

ISLAND DETAIL "B"
1" = 10'.

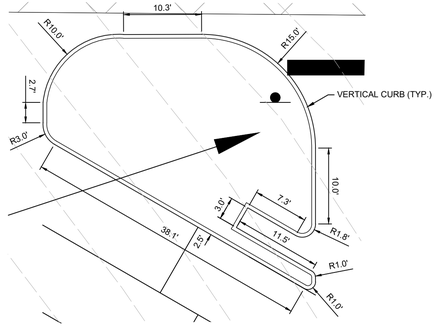

ISLAND DETAIL "C"
1" = 10'.

PUBLIX GENERATOR NOTES

1. ALL PUBLIX STORES WILL HAVE A STANDBY GENERATOR.
2. THE DEVELOPER IS RESPONSIBLE FOR ALL ZONING AND PERMITTING RELATED TO THE STANDBY GENERATOR. PUBLIX UTILIZES A 500KW STANDBY GENERATOR, CATERPILLAR MODEL C15 WITH A 1000-GALLON SUB-BASE DIESEL TANK. THE GENERATOR AND TANK MEET UL REQUIREMENTS. THE DOUBLE WALL TANK IS FL DEP APPROVED, AND THE GENERATOR HAS A SOUND ATTENUATED ENCLOSURE. CUT SHEETS FOR THE GENERATOR ARE AVAILABLE FOR DOWNLOAD AT WWW.CAT.COM. SEE EXHIBITS FOR CUT SHEETS FOR THE CUSTOM DIESEL TANK.
3. THE DEVELOPER WILL PROVIDE IMPACT PROTECTION FOR THE STANDBY GENERATOR PER ARCHITECTS PLANS BY OTHERS.
4. STANDBY GENERATOR PADS MUST BE SURROUNDED BY ASPHALT OR PAVED SURFACE. PADS MUST NOT BE SURROUNDED BY GRAVEL OR LANDSCAPE.
5. THE CIVIL ENGINEER SHALL VERIFY THAT THE 500 KW STANDBY GENERATOR AND ITS ASSOCIATED DIESEL FUEL TANK ARE:
   a. NOT WITHIN 500 FEET OF ANY EXISTING COMMUNITY WATER SUPPLY WELL
   b. NOT WITHIN 500 FEET OF ANY EXISTING NON-TRANSIENT, NON-COMMUNITY WATER SUPPLY WELL NOT WITHIN 100 FEET OF ANY OTHER MUNICIPAL WATER SUPPLY WELL.
6. THE CIVIL ENGINEER WILL COMPLETE, SIGN AND SEAL, AND SUBMIT TO PUBLIX, THE APPROPRIATE "DECLARATION OF COMPLIANCE WITH STORAGE TANK SITING REQUIREMENTS", CONTAINED WITHIN THE EXHIBITS SECTION.
7. REFER TO PROTOTYPE EXHIBITS FOR LOCATIONS AND DIMENSIONS OF THE EQUIPMENT PAD. NO UTILITIES ARE TO BE ROUTED THROUGH THIS AREA.
8. THE CIVIL ENGINEER WILL PROVIDE VERIFICATION THAT THE GENERATOR (INCLUDING DIESEL TANK) LOCATION IS NOT IN ANY ENVIRONMENTALLY PROTECTED AREAS OR DEFINED ENVIRONMENTALLY PROTECTED WELL FIELDS.

PUBLIX STRIPING NOTES

THE PREFERRED PRODUCT FOR TRAFFIC AND PAVEMENT MARKINGS; PARKING STALL LINES, SYMBOLS, CURB TOPS, STENCILS, WHEEL STOPS, IS COMPRISED OF TWO (2) COATS – FIRST COAT SHALL BE SHERWIN WILLIAMS PRO PARK WATERBORNE PAINT WITH CRUSHED GLASS ADDED FOR SLIP RESISTANCE. THE SECOND COAT TO BE APPLIED 30 DAYS AFTER THE FIRST COAT SHALL BE SOLVENT BASED, AEXCEL GORILLA PAINT WITH CRUSHED GLASS. GLASS USE SHALL BE 6 TO 8 POUNDS PER GALLON OF PAINT.

ALL ARROWS STOP BARS AND CROSSWALKS ARE TO BE THE SAME SPEC AS ABOVE. ALL BOLLARDS IN REAR SERVICE AREAS ARE TO BE PAINTED WITH SHERWIN WILLIAMS INDUSTRIAL ENAMEL, SAFETY YELLOW.

PAINT STRIPING IN ALL PARKING LOT AND PAVEMENT AREAS SHOULD BE CONSTRUCTED WITH A PAINT PRODUCT THAT PROVIDES A HIGH SLIP-RESISTANT FINISH AND PREVENTS INDIVIDUALS FROM SLIPPING WHEN STEPPING ON THE STRIPING IN BOTH WET AND DRY CONDITIONS.

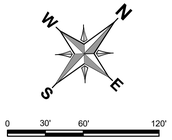

SCALE: 1"=60'

PAVEMENT LEGEND

HEAVY DUTY PAVEMENT

SIGN LEGEND: (PER FDOT INDEX 17349)

OM4-1
24" x 24"

R1-1
30" x 30"
HIGH INTENSITY

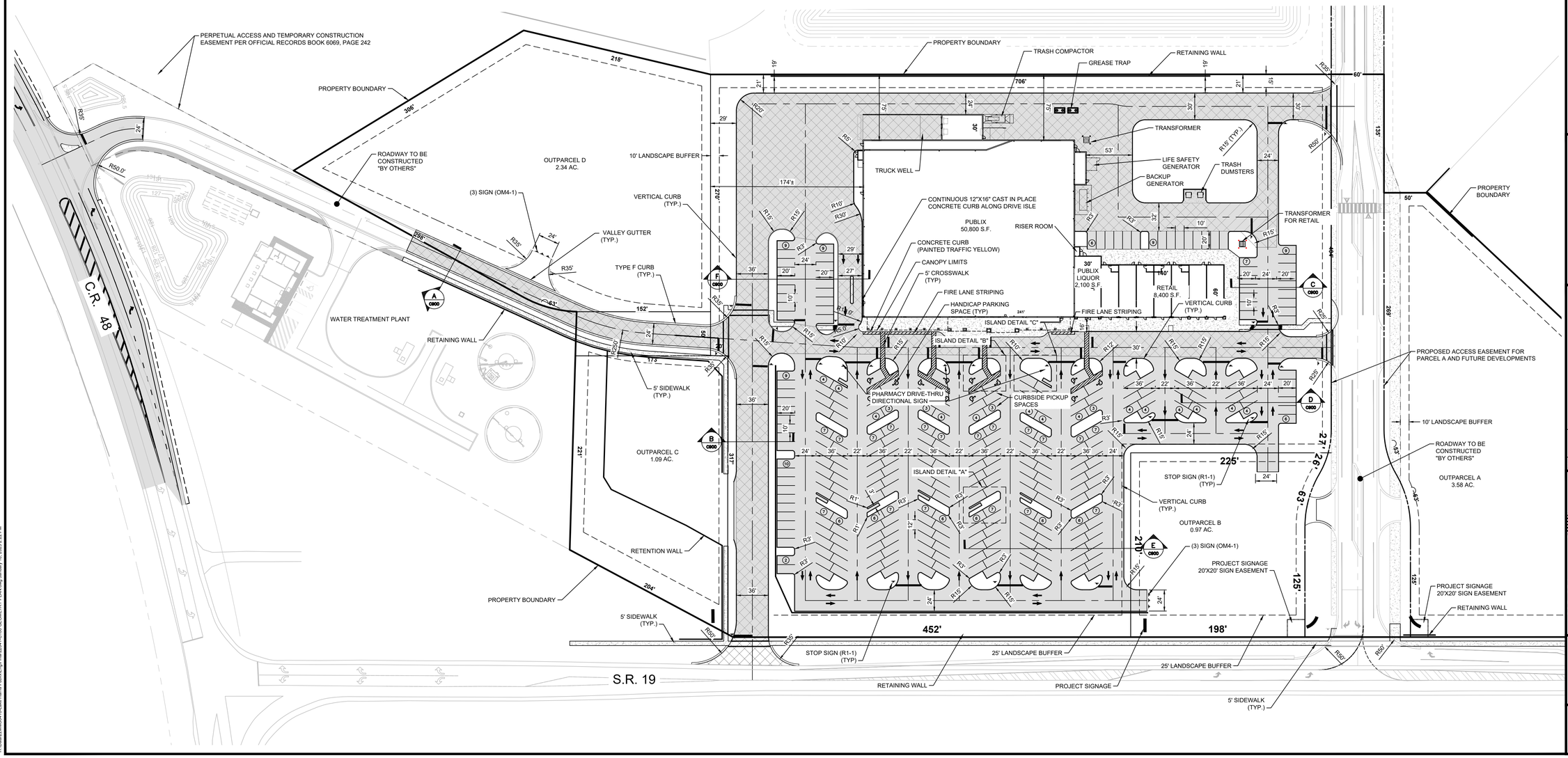

MADDEN
MOORHEAD & STOKES, LLC
CIVIL ENGINEERS
431 E. Horatio Avenue
Suite 260
Maitland, Florida 32751
(407) 629-8330
CA# 0007723

GEOMETRY PLAN

FOR

LAKE HILLS SHOPPING CENTER

FLORIDA

TOWN OF HOWEY IN THE HILLS

WINDCREST DEVELOPMENT GROUP, INC.
605 E. ROBINSON ST. SUITE 340
ORLANDO, FL 32801
407-219-3340

#	DATE	REVISIONS
1		
2		
3		
4		
5		
6		
7		
8		
9		
10		
11		

BENJAMIN S. BECKHAM
LICENSE
NO. 79452
STATE OF FLORIDA
PROFESSIONAL ENGINEER

This item has been digitally signed and sealed by Benjamin S. Beckham, PE on the date adjacent to the seal.

Printed copies of this document are not considered signed and sealed and the signature must be verified on any electronic copies.

ENGINEER OF RECORD

JOB #	22041
DATE:	08/06/24
DATUM:	NAVD 88
DESIGNED BY:	KGS
DRAWN BY:	JAS
APPROVED BY:	BSB

C101

THESE DOCUMENTS ARE THE PROPERTY OF MADDEN, MOORHEAD & STOKES, LLC AND ARE NOT TO BE USED IN WHOLE OR IN PART FOR ANY OTHER PROJECT WITHOUT THE EXPRESS WRITTEN AUTHORIZATION OF MADDEN, MOORHEAD & STOKES, LLC. © 2024 MADDEN, MOORHEAD & STOKES, LLC

H:\Data\22045\01\Lake Hams Publix\Eng\Final\22041 C100 GEOMETRY PLAN.dwg January 10, 2025 2:22 PM

SANITARYSTRUCTURE DATA	
NO.	STRUCTURE
SS1	RIM = 107.50' 48" SANITARY MANHOLE INV = 103.00' LAT1 INV = 103.00' LAT1 INV = 102.90' SP1
SS2	RIM = 106.81' 48" SANITARY MANHOLE INV = 101.79' SP1 INV = 101.79' LAT2 INV = 101.69' SP2
SS3	RIM = 106.45' 48" SANITARY MANHOLE INV = 97.50' SP2 INV = 97.40' SP3
SS4	RIM = 105.02' 48" SANITARY MANHOLE INV = 100.99' L39 INV = 100.89' SP4
SS5	RIM = 105.89' 48" SANITARY MANHOLE INV = 100.37' SP4 INV = 100.37' L23 INV = 100.27' SP5
SS6	RIM = 105.08' 60" DROP MANHOLE INV = 98.39' SP5 INV = 96.45' SP3 INV = 92.45' SP6

PIPE DATA				
NAME	SIZE	MATERIAL	PIPE LENGTH	SLOPE
LAT1	8"	PVC	57'	0.88%
LAT2	8"	PVC	62'	0.34%
SP1	8"	PVC	277'	0.40%
SP2	8"	PVC	173'	2.43%
SP3	8"	PVC	238'	0.40%
SP4	8"	PVC	128'	0.40%
SP5	8"	PVC	152'	1.24%
SP6	8"	PVC	248'	2.27%

FDEP SEPARATION REQUIREMENTS UNDER 62-555.314 EFFECTIVE 8-28-2003

HAZARD	HORIZONTAL SEPARATION	VERTICAL SEPARATION		JOINT SPACING
		WATER ABOVE	WATER BELOW	
STORM SEWER	3FT MIN	12IN PREF, 6IN MIN	12IN MIN	3FT MIN
STORM FORCE MAIN	3FT MIN	12IN MIN	12IN MIN	3FT MIN
RECLAIMED WATER IF REGULATED UNDER 62-610	3FT MIN	12IN MIN	12IN MIN	3FT MIN
RECLAIMED WATER IF NOT REGULATED UNDER 62-610	10FT PREF, 6FT MIN	12IN MIN	12IN MIN	6FT MIN
VACUUM SANITARY SEWER	10FT PREF, 3FT MIN	12IN PREF, 6IN MIN	12IN MIN	3FT MIN
GRAVITY SANITARY SEWER	10FT PREF, 6FT MIN, 3FT MIN IF WATER MAIN IS 6IN ABOVE GRAVITY SANITARY SEWER.	12IN PREF, 6IN MIN	12IN MIN	6FT MIN
SANITARY SEWER FORCE MAIN	10FT PREF, 6FT MIN	12IN MIN	12IN MIN	6FT MIN
SEWAGE TREATMENT & DISPOSAL SYSTEM	10FT MIN	NONE	NONE	NONE

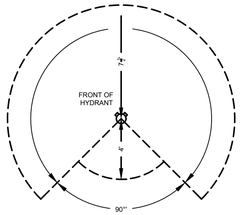

FIRE HYDRANT
CLEARANCE DETAIL

WATER NOTES

1. FIRE DEPARTMENT CONNECTION (NOTE: FIRE LINES DESIGNED BY OTHERS. SHOWN FOR INFORMATIONAL PURPOSES ONLY.)
2. POST INDICATOR VALVE
3. 6" FIRE HYDRANT ASSEMBLY
4. 8" X 8" X 8" TEE
5. 8" X 4" X 8" TEE
6. 8" X 2-1/2" X 8" TEE
7. 4" WATER METER WITH 4" BFP
8. 8" MASTER METER ASSEMBLY
9. 8" 90° BEND
10. 8" 45° BEND
11. 8" 22.5° BEND
12. 8" 11.25° BEND
13. 8" GATE VALVE
14. 3/4" HOSE BIBB
15. 2" WATER METER WITH 2" BFP
16. 4" DDCV
17. AUTOMATIC AIR RELEASE VALVE
18. 8" X 6" X 8" TEE
19. 6" GATE VALVE
20. 6" X 6" X 6" TEE
21. FIRE DEPARTMENT CONNECTION
22. 6" FIRE LINE

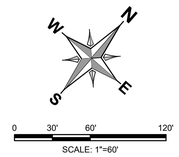

LEGEND

EXISTING	PROPOSED	
		BOUNDARY
		RIGHT OF WAY (MAJOR)
		RIGHT OF WAY (MINOR)
		TRACT LINE
		UTILITY EASEMENT (U.E.)
		DRAINAGE EASEMENT (D.E.)
		EASEMENT (OTHER)
		TOP OF BANK
		TOE OF SLOPE
		DITCH CENTER
		CURB
		CONCRETE WALK
		ASPHALT PAVEMENT
30	30	CONTOUR (MAJOR)
29	29	CONTOUR (MINOR)
DS-100	DS000	STORM STRUCTURE NUMBER
		STORM DRAINAGE MANHOLE
		STORM DRAINAGE INLET
		YARD DRAIN
		OUTFALL STRUCTURE
	OUT-1	PIPE END (OUTFALL)
	8" WM	WATER MAIN (WM)
	6" WM	WATER SERVICE LINE (W)
		WATER METER
		GATE VALVE & BOX
		PLUG VALVE & BOX
		BUTTERFLY VALVE & BOX
		CHECK VALVE
		2" BLOW-OFF VALVE ASSEMBLY
		BENDS
		TEE
		REDUCER
	DDCV	DOUBLE DETECTOR CHECK VALVE
		JUMPER CONNECTION
	BFP	BACKFLOW PREVENTER
		FIRE HYDRANT
SS-100		SANITARY SEWER STRUCTURE #
	S	SANITARY SEWER

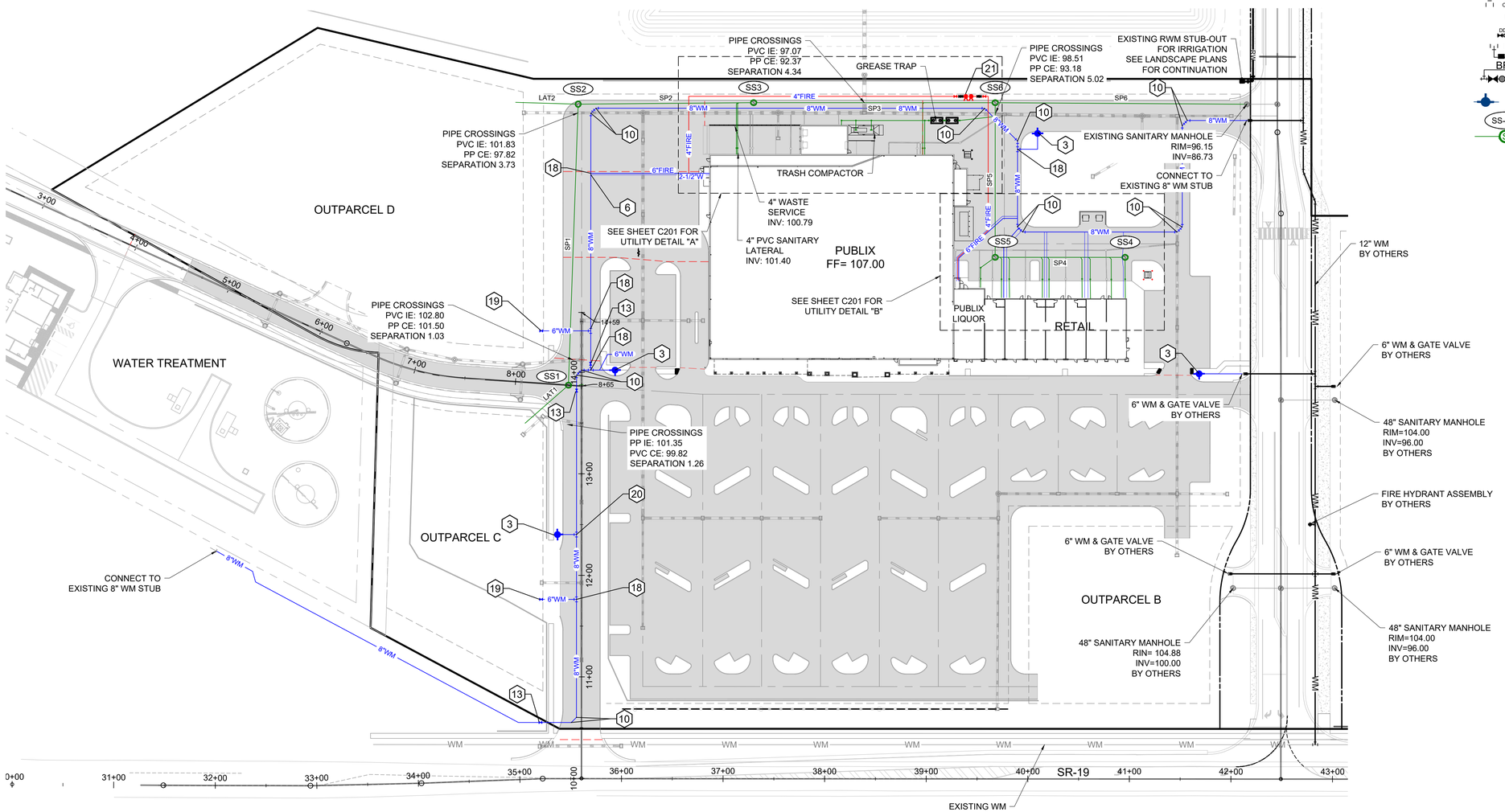

MADDEN
MOORHEAD & STOKES, LLC
CIVIL ENGINEERS
431 E. Horatio Avenue
Suite 260
Maitland, Florida 32751
(407) 629-8330
CA# 0007723

UTILITY PLAN
FOR
LAKE HILLS SHOPPING CENTER
TOWN OF HOWEY IN THE HILLS FLORIDA

WINDCREST DEVELOPMENT GROUP, INC.
605 E. ROBINSON ST - SUITE 340
ORLANDO, FL 32801
407-219-3540

NO.	DATE	REVISIONS
1		
2		
3		
4		
5		
6		
7		
8		
9		
10		
11		

BENJAMIN S. BECKHAM
LICENSE
NO. 79452
STATE OF FLORIDA
PROFESSIONAL ENGINEER

This item has been digitally signed and sealed by Benjamin S. Beckham, PE on the date adjacent to the seal.

Printed copies of this document are not considered signed and sealed and the signature must be verified on any electronic copies.

ENGINEER OF RECORD

JOB #	22041
DATE:	08/06/24
DATUM:	NAVD 88
DESIGNED BY:	KGS
DRAWN BY:	JAS
APPROVED BY:	BSB

C200

THESE DOCUMENTS ARE THE PROPERTY OF MADDEN, MOORHEAD & STOKES, LLC AND SHALL NOT BE USED IN WHOLE OR IN PART FOR ANY PROJECT OTHER THAN THE ONE FOR WHICH THEY WERE PREPARED. THEY ARE NOT TO BE LOANED, COPIED OR REPRODUCED WITHOUT THE WRITTEN CONSENT OF MADDEN, MOORHEAD & STOKES, LLC. © 2024 MADDEN, MOORHEAD & STOKES, LLC. ALL RIGHTS RESERVED.

H:\Data\22MB\041\Lake Hanis Pubix\Eng\Final\22041-C200-OVERALL UTILITY PLAN.dwg January 10, 2023 2:24 PM

SANITARY STRUCTURE DATA	
NO.	STRUCTURE
CO1	INV = 100.42' L1 INV = 100.42' L2
CO2	INV = 100.43' L3 INV = 100.43' L4
CO3	INV = 101.36' L5 INV = 101.36' L6
CO4	INV = 101.30' L6 INV = 101.30' L7 INV = 101.30' L8
CO5	INV = 101.23' L8 INV = 101.23' L9 INV = 101.23' L10
CO6	INV = 101.00' L11 INV = 101.00' L12
CO7	INV = 101.20' L13 INV = 101.20' L14
CO8	INV = 101.00' L14 INV = 101.00' L10 INV = 101.00' L15
CO9	INV = 100.95' L15 INV = 101.95' L16
CO10	INV = 101.65' L17 INV = 101.65' L18
CO11	INV = 101.35' L19 INV = 101.35' L20

SANITARY STRUCTURE DATA	
NO.	STRUCTURE
CO12	INV = 101.26' L21 INV = 101.26' L22
CO13	INV = 100.86' L22 INV = 100.86' L23
CO14	INV = 101.01' L24 INV = 101.01' L25
CO15	INV = 101.01' L26 INV = 101.01' L27
CO16	INV = 101.07' L28 INV = 101.07' L29
CO17	INV = 101.07' L30 INV = 101.07' L31
CO18	INV = 101.13' L32 INV = 101.13' L33
CO19	INV = 101.23' L34 INV = 101.23' L35
CO20	INV = 101.23' L36 INV = 101.23' L37
CO21	INV = 101.23' L38 INV = 101.23' L39

PIPE DATA				
NAME	SIZE	MATERIAL	PIPE LENGTH	SLOPE
L1	4"	PVC	6'	5.87%
L2	4"	PVC	43'	5.87%
L3	4"	PVC	6'	5.85%
L4	4"	PVC	44'	5.85%
L5	4"	PVC	4'	0.82%
L6	4"	PVC	14'	0.44%
L7	4"	PVC	9'	7.70%
L8	4"	PVC	15'	0.44%
L9	4"	PVC	9'	8.46%
L10	4"	PVC	53'	0.44%
L11	4"	PVC	6'	6.42%
L12	4"	PVC	44'	9.41%
L13	4"	PVC	6'	3.19%
L14	4"	PVC	27'	0.73%
L15	4"	PVC	4'	1.26%
L16	4"	PVC	2'	2.28%
L17	4"	PVC	2'	2.80%
L18	4"	PVC	2'	2.92%
L19	4"	PVC	2'	2.89%
L20	4"	PVC	34'	7.81%

PIPE DATA				
NAME	SIZE	MATERIAL	PIPE LENGTH	SLOPE
L21	4"	PVC	9'	1.68%
L22	4"	PVC	11'	3.64%
L23	4"	PVC	18'	2.78%
L24	4"	PVC	18'	2.16%
L25	4"	PVC	20'	3.01%
L26	4"	PVC	18'	2.16%
L27	4"	PVC	20'	3.04%
L28	4"	PVC	18'	1.86%
L29	4"	PVC	19'	2.56%
L30	4"	PVC	18'	1.83%
L31	4"	PVC	20'	2.53%
L32	4"	PVC	18'	1.48%
L33	4"	PVC	19'	2.14%
L34	4"	PVC Pipe	19'	0.87%
L35	4"	PVC Pipe	20'	2.49%
L36	4"	PVC Pipe	18'	0.90%
L37	4"	PVC Pipe	20'	2.06%
L38	4"	PVC Pipe	18'	0.90%
L39	4"	PVC Pipe	22'	1.12%

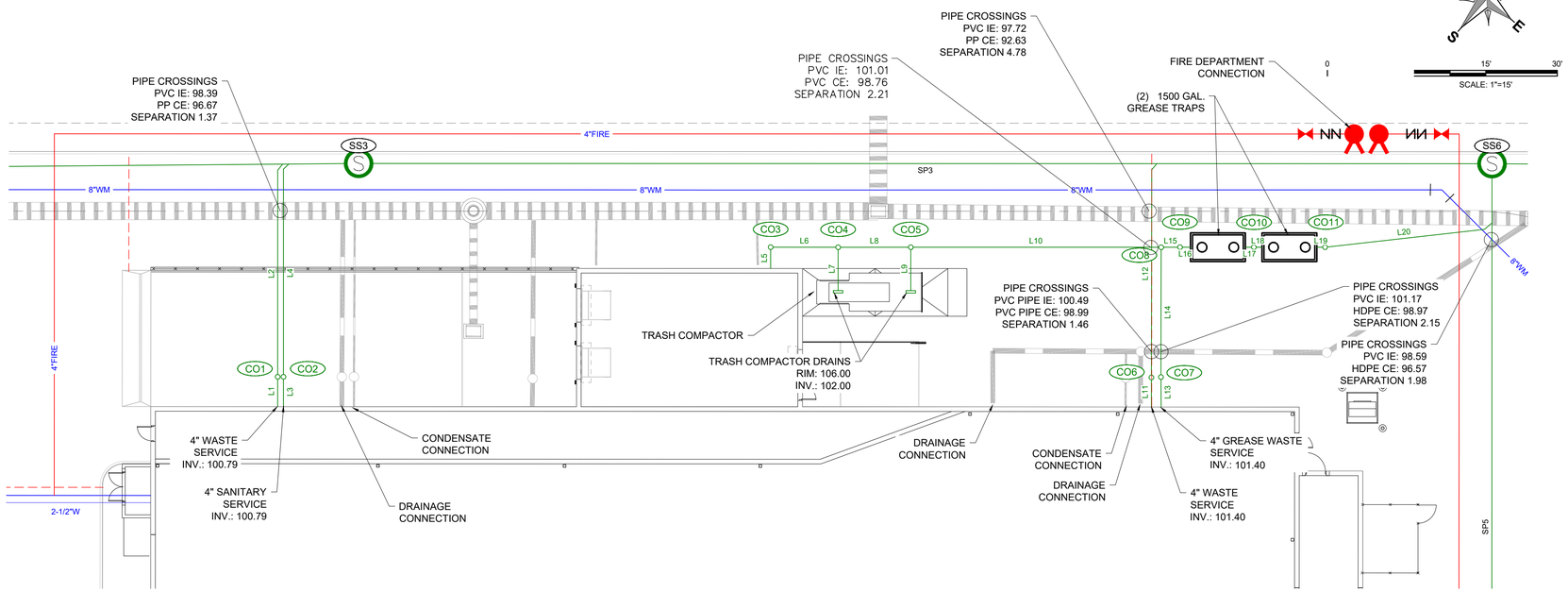

UTILITY DETAIL "A"

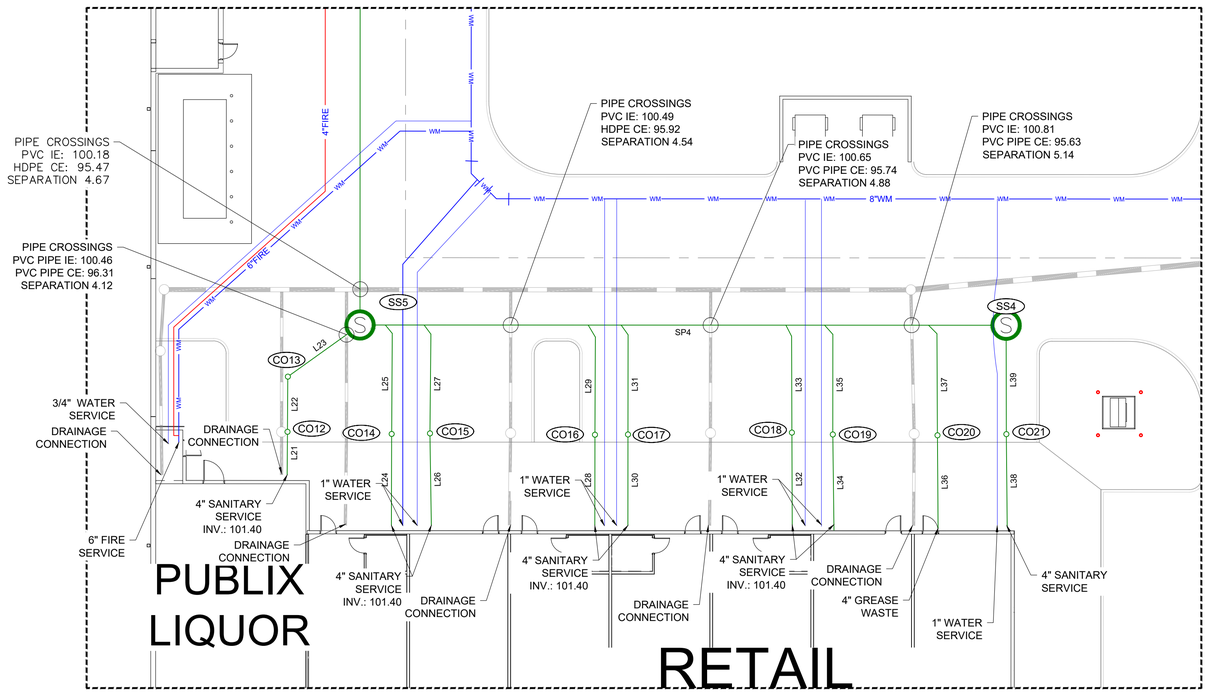

UTILITY DETAIL "B"

MADDEN
MOORHEAD & STOKES, LLC
CIVIL ENGINEERS
431 E. Horatio Avenue
Suite 260
Maitland, Florida 32751
(407) 629-8330
CA# 0007723

UTILITY PLAN
FOR
LAKE HILLS SHOPPING CENTER
TOWN OF HOWEY IN THE HILLS FLORIDA

WINDCREST DEVELOPMENT GROUP, INC.
600 E. ROBINSON ST. SUITE 340
ORLANDO, FL 32801
407-219-5540

REVISIONS	DATE
1	
2	
3	
4	
5	
6	
7	
8	
9	
10	
11	

BENJAMIN S. BECKHAM
LICENSE NO. 79452
STATE OF FLORIDA
PROFESSIONAL ENGINEER

This item has been digitally signed and sealed by Benjamin S. Beckham, PE on the date adjacent to the seal.

Printed copies of this document are not considered signed and sealed and the signature must be verified on any electronic copies.

ENGINEER OF RECORD

JOB # 22041
DATE: 08/06/24
DATUM: NAVD 88
DESIGNED BY: KGS
DRAWN BY: JAS
APPROVED BY: BSB

C201

THESE DOCUMENTS AND THEIR CONTENTS ARE THE PROPERTY OF MADDEN, MOORHEAD & STOKES, LLC AND SHALL NOT BE USED IN WHOLE OR IN PART FOR ANY PROJECT OTHER THAN THE ONE FOR WHICH THEY WERE PREPARED. THESE DOCUMENTS SHALL NOT BE REPRODUCED, PUBLISHED OR ALTERED IN ANY WAY WITHOUT THE WRITTEN CONSENT OF MADDEN, MOORHEAD & STOKES, LLC. ALL UNAUTHORIZED USE SHALL BE AT THE USER'S SOLE RISK AND WITHOUT LIABILITY TO MADDEN, MOORHEAD & STOKES, LLC.

H:\Data\22M8504\10-Lake Hams Public\Engr\Final\22041-C200-OVERALL UTILITY PLAN.dwg January 10, 2025 2:24 PM

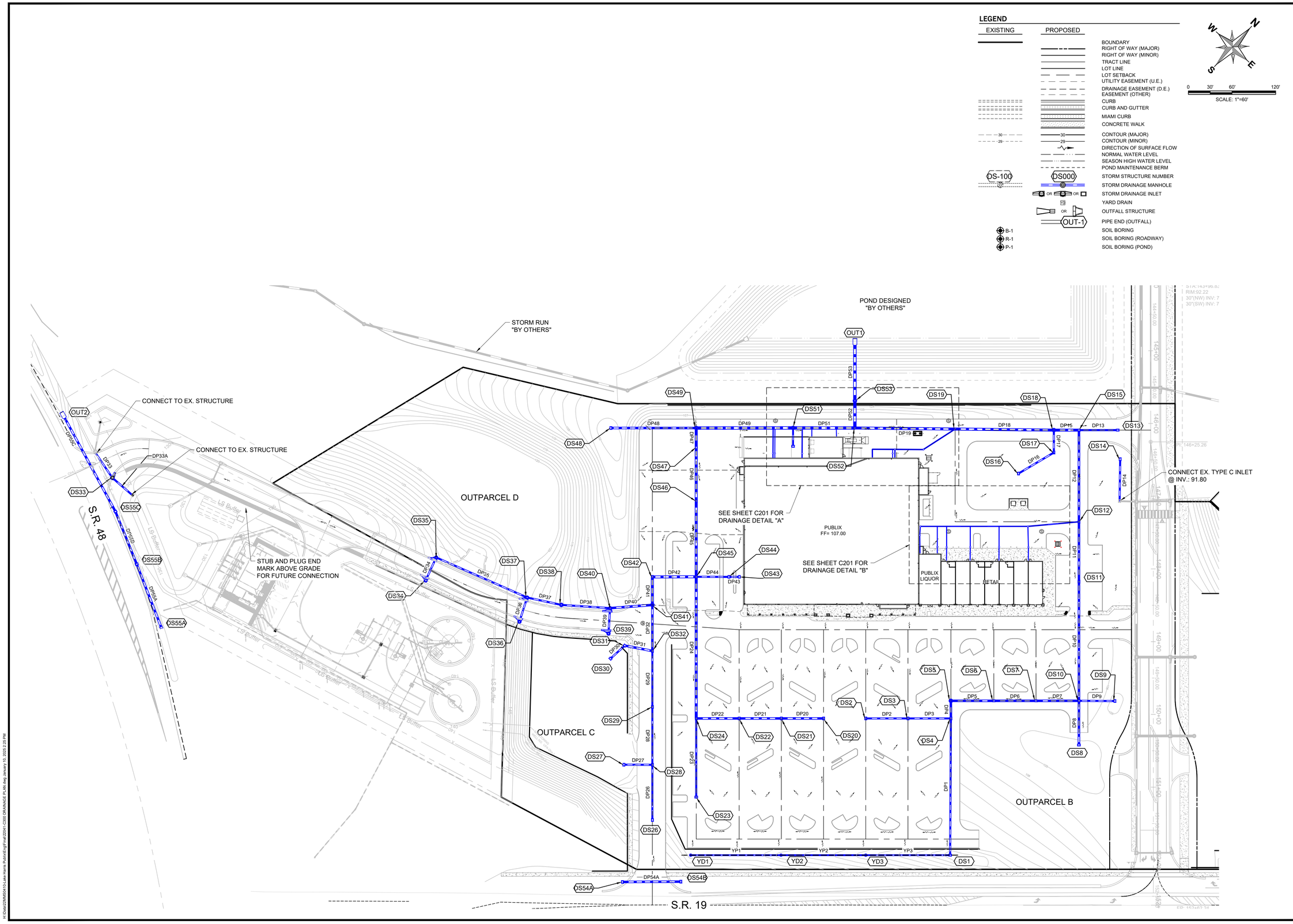

MADDEN
MOORHEAD & STOKES, LLC
CIVIL ENGINEERS
431 E. Horatio Avenue
Suite 260
Maitland, Florida 32751
(407) 629-8330
CA# 0007723

DRAINAGE PLAN
FOR
LAKE HILLS SHOPPING CENTER
TOWN OF HOWEY IN THE HILLS FLORIDA

WINDCREST DEVELOPMENT GROUP, INC.
605 E. ROBINSON ST. SUITE 340
ORLANDO, FL 32801
407-219-3540

	DATE	REVISIONS
1		
2		
3		
4		
5		
6		
7		
8		
9		
10		
11		

BENJAMIN S. BECKHAM
LICENSE
NO. 79452
STATE OF FLORIDA
PROFESSIONAL ENGINEER

This item has been digitally signed and sealed by Benjamin S. Beckham, PE on the date adjacent to the seal.

Printed copies of this document are not considered signed and sealed and the signature must be verified on any electronic copies.

ENGINEER OF RECORD

JOB #	22041
DATE:	08/06/24
DATUM:	NAVD 88
DESIGNED BY:	KGS
DRAWN BY:	JAS
APPROVED BY:	BSB

C300

STORM STRUCTURE DATA	
NO.	STRUCTURE
CO1	RIM = 103.00' CLEAN OUT INV = 100.75 L1 INV = 97.00 L2
CO2	RIM = 103.00' CLEAN OUT INV = 99.25 L3 INV = 96.00 L4
CO3	RIM = 102.85' CLEAN OUT INV = 98.75 L5 INV = 96.00 L6
CO5	RIM = 106.25' CLEAN OUT INV = 101.00 L11 INV = 101.00 L12
CO6	RIM = 106.25' CLEAN OUT INV = 100.25 L10 INV = 100.25 L13 INV = 98.00 L14
CO7	RIM = 106.46' CLEAN OUT INV = 97.75 L14 INV = 97.75 L15
CO8	RIM = 99.31' CLEAN OUT INV = 96.87 L16 INV = 96.87 L17
CO9	RIM = 106.25' CLEAN OUT INV = 94.83 CP1A INV = 94.83 L17 INV = 94.83 L18
CO10	RIM = 114.39' CLEAN OUT INV = 100.11 L19 INV = 100.11 L20
CO11	RIM = 101.35' CLEAN OUT INV = 98.92 L21 INV = 98.92 L22
CO12	RIM = 101.32' CLEAN OUT INV = 98.89 L23 INV = 98.89 L24

STORM STRUCTURE DATA	
NO.	STRUCTURE
CO13	RIM = 101.24' CLEAN OUT INV = 98.80 L25 INV = 98.80 L26
CO14	RIM = 101.19' CLEAN OUT INV = 98.76 L27 INV = 98.76 L28
CO15	RIM = 105.06' CLEAN OUT INV = 94.09 L18 INV = 94.09 L28 INV = 94.09 L29
DS1	RIM = 113.50' TYPE C INLET INV = 109.00 YP3 INV = 101.69 DP1
DS2	RIM = 104.85' TYPE C INLET INV = 100.25 DP2
DS3	RIM = 104.85' TYPE C INLET INV = 100.13 DP2 INV = 100.13 DP3
DS4	RIM = 104.85' TYPE C INLET INV = 98.08 DP1 INV = 100.02 DP3 INV = 98.08 DP4
DS5	RIM = 105.09' STORM MANHOLE INV = 98.01 DP4 INV = 98.01 DP5
DS6	RIM = 105.09' TYPE C INLET INV = 97.84 DP5 INV = 97.84 DP6
DS7	RIM = 105.09' TYPE C INLET INV = 97.66 DP6 INV = 97.66 DP7
DS8	RIM = 104.50' TYPE C INLET INV = 97.75 DP8

STORM STRUCTURE DATA	
NO.	STRUCTURE
DS9	RIM = 104.50' TYPE C INLET INV = 97.75 DP9
DS10	RIM = 105.09' TYPE C INLET INV = 97.49 DP7 INV = 97.49 DP9 INV = 97.49 DP8 INV = 97.49 DP10
DS11	RIM = 105.89' TYPE C INLET INV = 96.99 DP10 INV = 96.99 DP11
DS12	RIM = 104.48' TYPE C INLET INV = 96.75 DP11 INV = 93.75 L29 INV = 93.75 DP12
DS13	RIM = 96.95' TYPE C INLET INV = 92.00 DP13
DS14	RIM = 96.45' TYPE C INLET INV = 92.00 DP14
DS15	RIM = 99.50' TYPE C INLET INV = 93.36 DP12 INV = 91.50 DP13 INV = 91.50 DP15
DS16	RIM = 104.25' TYPE C INLET INV = 99.50 DP16
DS17	RIM = 100.75' TYPE C INLET INV = 96.25 DP17
DS18	RIM = 100.57' STORM MANHOLE INV = 91.25 DP15 INV = 96.00 DP17 INV = 91.25 DP18
DS19	RIM = 104.76' TYPE C INLET INV = 90.75 DP18 INV = 95.00 L15 INV = 90.75 DP19

STORM STRUCTURE DATA	
NO.	STRUCTURE
DS20	RIM = 104.85' TYPE C INLET INV = 99.25 DP20
DS21	RIM = 104.85' TYPE C INLET INV = 99.08 DP20 INV = 99.08 DP21
DS22	RIM = 104.85' TYPE C INLET INV = 98.90 DP21 INV = 98.90 DP22
DS23	RIM = 109.18' TYPE C INLET INV = 104.00 DP23
DS24	RIM = 104.85' TYPE C INLET INV = 98.73 DP22 INV = 98.73 DP23 INV = 98.73 DP24
DS26	RIM = 123.23' TYPE C INLET INV = 117.00 DP26
DS27	RIM = 118.00' TYPE C INLET INV = 110.50 DP27
DS28	RIM = 117.81' TYPE C INLET INV = 113.00 DP26 INV = 110.00 DP27 INV = 110.00 DP28
DS29	RIM = 112.13' TYPE C INLET INV = 107.25 DP28 INV = 107.25 DP29
DS30	RIM = 116.50' TYPE C INLET INV = 101.90 DP30
DS31	RIM = 106.50' TYPE C INLET INV = 101.50 DP30 INV = 101.50 DP31

STORM STRUCTURE DATA	
NO.	STRUCTURE
DS32	RIM = 107.53' TYPE C INLET INV = 103.00 DP29 INV = 101.25 DP31 INV = 101.25 DP32
DS33	RIM = 127.30' TYPE 5 INLET INV = 119.84 DP33A INV = 119.84 DP33
DS34	RIM = 129.75' TYPE 1 INLET INV = 123.00 DP34
DS35	RIM = 129.75' TYPE 1 INLET INV = 122.80 DP34 INV = 120.00 DP35
DS36	RIM = 118.49' TYPE 1 INLET INV = 113.00 DP36
DS37	RIM = 118.51' TYPE 1 INLET INV = 113.90 DP35 INV = 112.80 DP36 INV = 109.00 DP37
DS38	RIM = 114.50' STORM MANHOLE INV = 106.87 DP37 INV = 106.87 DP38
DS39	RIM = 109.12' TYPE 1 INLET INV = 104.00 DP39
DS40	RIM = 109.13' TYPE 1 INLET INV = 103.90 DP38 INV = 103.90 DP39 INV = 99.70 DP40
DS41	RIM = 107.75' STORM MANHOLE INV = 100.75 DP32 INV = 99.45 DP40 INV = 99.45 DP41
DS42	RIM = 107.01' TYPE C INLET INV = 99.33 DP41 INV = 99.33 DP42

STORM STRUCTURE DATA	
NO.	STRUCTURE
DS43	RIM = 106.06' TYPE C INLET INV = 101.25 DP43
DS44	RIM = 106.06' TYPE C INLET INV = 101.00 DP43 INV = 101.00 DP44
DS45	RIM = 105.92' TYPE C INLET INV = 99.15 DP42 INV = 100.75 DP44 INV = 98.14 DP24 INV = 96.84 DP45
DS46	RIM = 105.97' TYPE C INLET INV = 96.53 DP45 INV = 96.53 DP46
DS47	RIM = 106.11' TYPE C INLET INV = 96.31 DP46 INV = 96.31 DP47
DS48	RIM = 101.50' TYPE C INLET INV = 96.00 DP48
DS49	RIM = 106.36' STORM MANHOLE INV = 96.23 DP47 INV = 95.60 DP48 INV = 94.30 DP49
DS50	RIM = 102.75' TYPE C INLET INV = 98.20 DP50
DS51	RIM = 106.06' STORM MANHOLE INV = 93.40 DP49 INV = 98.00 DP50 INV = 93.40 DP51
DS52	RIM = 105.67' TYPE C INLET INV = 93.00 DP51 INV = 89.50 DP19 INV = 89.50 DP52
DS53	RIM = 96.17' STORM MANHOLE INV = 89.00 DP52 INV = 83.00 DP53

STORM STRUCTURE DATA	
NO.	STRUCTURE
DS54A	RIM = 127.00' TYPE C INLET INV = 123.00 DP54A
DS54B	RIM = 126.00' TYPE C INLET INV = 122.75 DP54A
DS55A	RIM = 130.00' TYPE C INLET INV = 125.00 DP55A
DS55B	RIM = 129.50' TYPE C INLET INV = 124.50 DP55A INV = 124.50 DP55B
DS55C	RIM = 128.75' TYPE C INLET INV = 122.35 DP55B INV = 122.35 DP55C
OUT1	RIM = 83.33' MITER END SECTION INV = 80.00 DP53
OUT2	RIM = 119.25' MITER END SECTION INV = 122.00 DP55C
YD1	RIM = 123.20' YARD DRAIN INV = 118.70 YP1
YD2	RIM = 121.40' YARD DRAIN INV = 116.90 YP1 INV = 116.90 YP2
YD3	RIM = 117.96' YARD DRAIN INV = 113.50 YP2 INV = 113.50 YP3

INSERTA TEE ® DETAIL (HP)

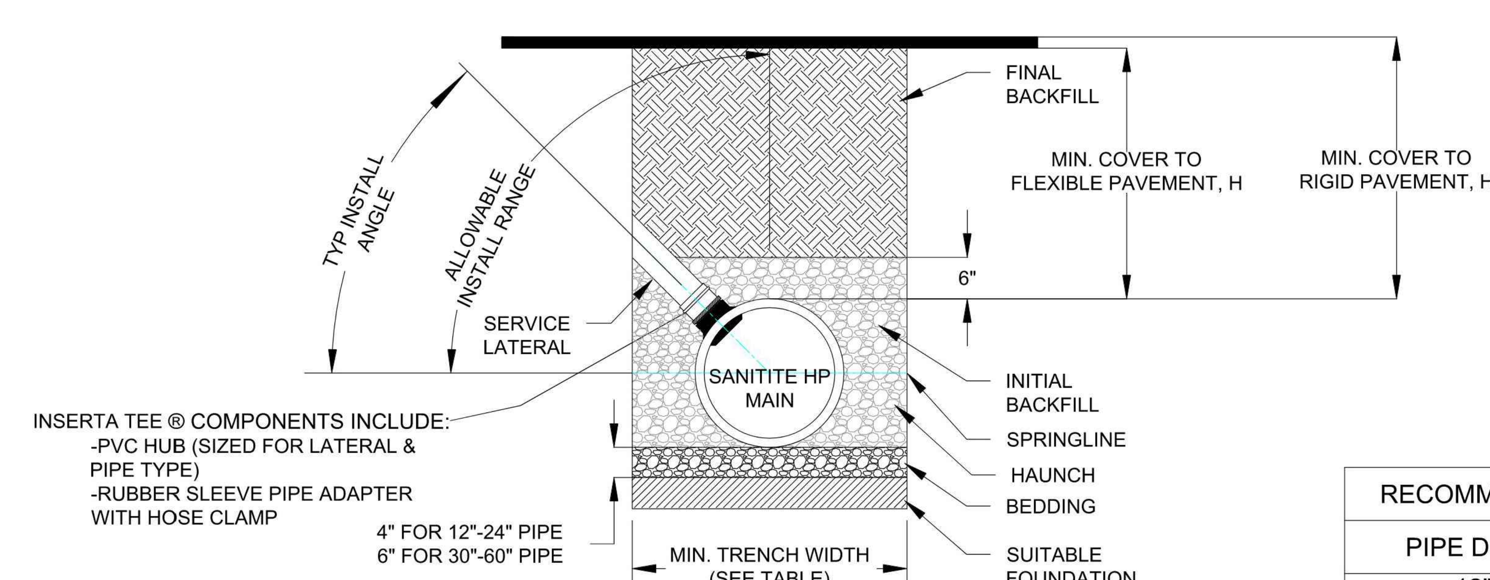

NOTES:

1. ALL PIPE SYSTEMS SHALL BE INSTALLED IN ACCORDANCE WITH ASTM D2321, "STANDARD PRACTICE FOR UNDERGROUND INSTALLATION OF THERMOPLASTIC PIPE FOR SEWERS AND OTHER GRAVITY FLOW APPLICATIONS", LATEST ADDITION

2. MEASURES SHOULD BE TAKEN TO PREVENT MIGRATION OF NATIVE FINES INTO BACKFILL MATERIAL, WHEN REQUIRED.

3. THE INSERTA TEE CONNECTION CAN BE INSTALLED UP TO A VERTICAL ORIENTATION, BUT A 45° INSTALL ANGLE IS MOST COMMON. GREATER ANGLES ARE SUBJECT TO DESIGN ENGINEER APPROVAL AND MAY REQUIRE PREMIUM BACKFILL.

4. FOUNDATION: WHERE THE TRENCH BOTTOM IS UNSTABLE, THE CONTRACTOR SHALL EXCAVATE TO A DEPTH REQUIRED BY THE ENGINEER AND REPLACE WITH SUITABLE MATERIAL AS SPECIFIED BY THE ENGINEER. AS AN ALTERNATIVE AND AT THE DISCRETION OF THE DESIGN ENGINEER, THE TRENCH BOTTOM MAY BE STABILIZED USING A GEOTEXTILE MATERIAL.

5. BEDDING: SUITABLE MATERIAL SHALL BE CLASS I, II OR III. THE CONTRACTOR SHALL PROVIDE DOCUMENTATION FOR MATERIAL SPECIFICATION TO ENGINEER. UNLESS OTHERWISE NOTED BY THE ENGINEER, MINIMUM BEDDING THICKNESS SHALL BE 4" (100mm) FOR 4"-24" (100mm-600mm); 6" (150mm) FOR 30"-60" (750mm-1500mm).

6. INITIAL BACKFILL: SUITABLE MATERIAL SHALL BE CLASS I, II OR III IN THE PIPE ZONE EXTENDING NOT LESS THAN 6" ABOVE CROWN OF PIPE. THE CONTRACTOR SHALL PROVIDE DOCUMENTATION FOR MATERIAL SPECIFICATION TO ENGINEER. MATERIAL SHALL BE INSTALLED AS REQUIRED IN ASTM D2321, LATEST EDITION.

7. MINIMUM COVER: MINIMUM COVER, H, IN NON-TRAFFIC APPLICATIONS (GRASS OR LANDSCAPE AREAS) IS 12" FROM THE TOP OF PIPE TO GROUND SURFACE. ADDITIONAL COVER MAY BE REQUIRED TO PREVENT FLOTATION. FOR TRAFFIC APPLICATIONS, MINIMUM COVER, H, IS 12" UP TO 48" DIAMETER PIPE AND 24" OF COVER FOR 54"-60" DIAMETER PIPE, MEASURED FROM TOP OF PIPE TO BOTTOM OF FLEXIBLE PAVEMENT OR TO TOP OF RIGID PAVEMENT.

RECOMMENDED MINIMUM TRENCH WIDTHS	
PIPE DIAM.	MIN. TRENCH WIDTH
12" (300mm)	30" (762mm)
15" (375mm)	34" (864mm)
18" (450mm)	39" (991mm)
24" (600mm)	48" (1219mm)
30" (750mm)	56" (1422mm)
36" (900mm)	64" (1626mm)
42" (1050mm)	72" (1829mm)
48" (1200mm)	80" (2032mm)
60" (1500mm)	96" (2438mm)

NOTE: FOR INSTALLATION INSTRUCTIONS, REFER TO DETAIL STD-1100. FOR PROTRUSION INFORMATION, REFER TO DETAIL STD-1101. FOR HOLE SAW INFORMATION, REFER TO DETAIL STD-1102.

ADVANCED DRAINAGE SYSTEMS, INC. ("ADS") HAS PREPARED THIS DETAIL BASED ON INFORMATION PROVIDED TO ADS. THIS DRAWING IS INTENDED TO DEPICT THE COMPONENTS AS REQUESTED. ADS HAS NOT PERFORMED ANY ENGINEERING OR DESIGN SERVICES FOR THIS PROJECT, NOR HAS ADS INDEPENDENTLY VERIFIED THE INFORMATION SUPPLIED. THE INSTALLATION DETAILS PROVIDED HEREIN ARE GENERAL RECOMMENDATIONS AND ARE NOT SPECIFIC FOR THIS PROJECT. THE DESIGN ENGINEER SHALL REVIEW THESE DETAILS PRIOR TO CONSTRUCTION. IT IS THE DESIGN ENGINEERS RESPONSIBILITY TO ENSURE THE DETAILS PROVIDED HEREIN MEETS OR EXCEEDS THE APPLICABLE NATIONAL, STATE, OR LOCAL REQUIREMENTS AND TO ENSURE THAT THE DETAILS PROVIDED HEREIN ARE ACCEPTABLE FOR THIS PROJECT.

INSERTA TEE DETAIL (HP)

DRAWING NUMBER STD-101J

ADS
4640 TRUEMAN BLVD
HILLIARD, OH 43026

DRAWN BY: HAK
DATE: 07/19/23
CK'S BY: ENG
SCALE: NTS
SHEET: 1

PIPE DATA				
NAME	SIZE	MATERIAL	PIPE LENGTH	SLOPE
DP1	18"	PP	188'	1.92%
DP2	18"	PP	58'	0.20%
DP3	18"	PP	59'	0.20%
DP4	24"	PP	24'	0.30%
DP5	24"	PP	59'	0.29%
DP6	24"	PP	58'	0.30%
DP7	24"	PP	59'	0.30%
DP8	24"	PP	61'	0.43%
DP9	18"	PP	49'	0.53%
DP10	24"	PP	164'	0.30%
DP11	24"	PP	82'	0.29%
DP12	24"	PP	126'	0.31%
DP13	18"	PP	53'	0.94%
DP14	18"	PP	58'	0.35%
DP15	30"	PP	34'	0.72%
DP16	18"	PP	57'	5.75%
DP17	18"	PP	31'	0.81%
DP18	30"	PP	136'	0.37%
DP19	30"	PP	138'	0.91%
DP20	24"	PP	58'	0.30%
DP21	24"	PP	58'	0.30%

PIPE DATA				
NAME	SIZE	MATERIAL	PIPE LENGTH	SLOPE
DP22	24"	PP	59'	0.30%
DP23	18"	PP	108'	4.87%
DP24	30"	PP	195'	0.30%
DP26	18"	PP	76'	5.27%
DP27	18"	PP	39'	1.28%
DP28	18"	PP	80'	3.46%
DP29	18"	PP	77'	5.52%
DP30	18"	PP	27'	1.50%
DP31	24"	PP	39'	0.65%
DP32	24"	PP	63'	0.79%
DP33	18"	PP	41'	3.27%
DP33A	18"	PP	35'	4.53%
DP34	18"	PP	35'	0.57%
DP35	18"	PP	137'	4.47%
DP36	18"	PP	35'	0.57%
DP37	18"	PP	48'	4.43%
DP38	18"	PP	67'	4.43%
DP39	18"	PP	35'	0.28%
DP40	24"	PP	58'	0.43%
DP41	30"	PP	38'	0.30%
DP42	30"	PP	60'	0.30%

PIPE DATA				
NAME	SIZE	MATERIAL	PIPE LENGTH	SLOPE
DP43	18"	PP	14'	1.75%
DP44	18"	PP	45'	0.56%
DP45	30"	PP	104'	0.30%
DP46	30"	PP	73'	0.30%
DP47	30"	PP	27'	0.30%
DP48	24"	PP	117'	0.34%
DP49	36"	PP	133'	0.67%
DP50	15"	PP	25'	0.79%
DP51	36"	PP	85'	0.47%
DP52	36"	PP	37'	1.34%
DP53	36"	PP	79'	3.81%
DP54A	24"	PP	80'	0.31%
DP55A	24"	PP	93'	0.54%
DP55B	24"	PP	78'	2.76%
DP55C	24"	PP	148'	0.24%
YP1	15"	PP	124'	1.45%
YP2	15"	PP	116'	2.92%
YP3	15"	PP	116'	3.88%

MADDEN
MOORHEAD & STOKES, LLC
CIVIL ENGINEERS
431 E. Horatio Avenue
Suite 260
Maitland, Florida 32751
(407) 629-8330
CA# 0007723

DRAINAGE PLAN
FOR
LAKE HILLS SHOPPING CENTER
TOWN OF HOWEY IN THE HILLS
FLORIDA

WINDCREST DEVELOPMENT GROUP, INC.
605 E. ROBINSON ST. SUITE 340
ORLANDO, FL 32801
407-219-3540

	DATE	REVISIONS
1		
2		
3		
4		
5		
6		
7		
8		
9		
10		
11		

BENJAMIN S. BECKHAM
LICENSE
NO. 79452
STATE OF FLORIDA
PROFESSIONAL ENGINEER

This item has been digitally signed and sealed by Benjamin S. Beckham, PE on the date adjacent to the seal.

Printed copies of this document are not considered signed and sealed and the signature must be verified on any electronic copies.

ENGINEER OF RECORD

JOB # 22041
DATE: 08/06/24
DATUM: NAVD 88
DESIGNED BY: KGS
DRAWN BY: JAS
APPROVED BY: BSB

C301

THESE DOCUMENTS AND THEIR CONTENTS ARE THE PROPERTY OF MADDEN, MOORHEAD & STOKES, LLC. AND ARE ISSUED ONLY FOR THE SPECIFIC PROJECT NOTED ON THESE DRAWINGS. ANY REPRODUCTIONS, REVISIONS OR MODIFICATIONS OF THESE DOCUMENTS WITHOUT THE EXPRESSED WRITTEN CONSENT OF MADDEN, MOORHEAD & STOKES, LLC. IS PROHIBITED BY LAW.

H:\Data\22MMS0410-Lake Harris Publix\Eng\Final\22041-C300 DRAINAGE PLAN.dwg January 10, 2025 2:26 PM

STORM STRUCTURE DATA	
NO.	STRUCTURE
CO1	INV = 100.75 L1 INV = 97.00 L2
CO2	INV = 99.25 L3 INV = 96.00 L4
CO3	INV = 98.75 L5 INV = 96.00 L6
CO5	INV = 101.00 L11 INV = 101.00 L12
CO6	INV = 100.25 L10 INV = 100.25 L13 INV = 98.00 L14
CO7	INV = 97.75 L14 INV = 97.75 L15
CO8	INV = 96.87 L16 INV = 96.87 L17
CO9	INV = 94.83 CP1A INV = 94.83 L17 INV = 94.83 L18

STORM STRUCTURE DATA	
NO.	STRUCTURE
CO10	INV = 100.11 L19 INV = 100.11 L20
CO11	INV = 98.92 L21 INV = 98.92 L22
CO12	INV = 98.89 L23 INV = 98.89 L24
CO13	INV = 98.80 L25 INV = 98.80 L26
CO14	INV = 98.76 L27 INV = 98.76 L28
CO15	INV = 94.09 L18 INV = 94.09 L28 INV = 94.09 L29

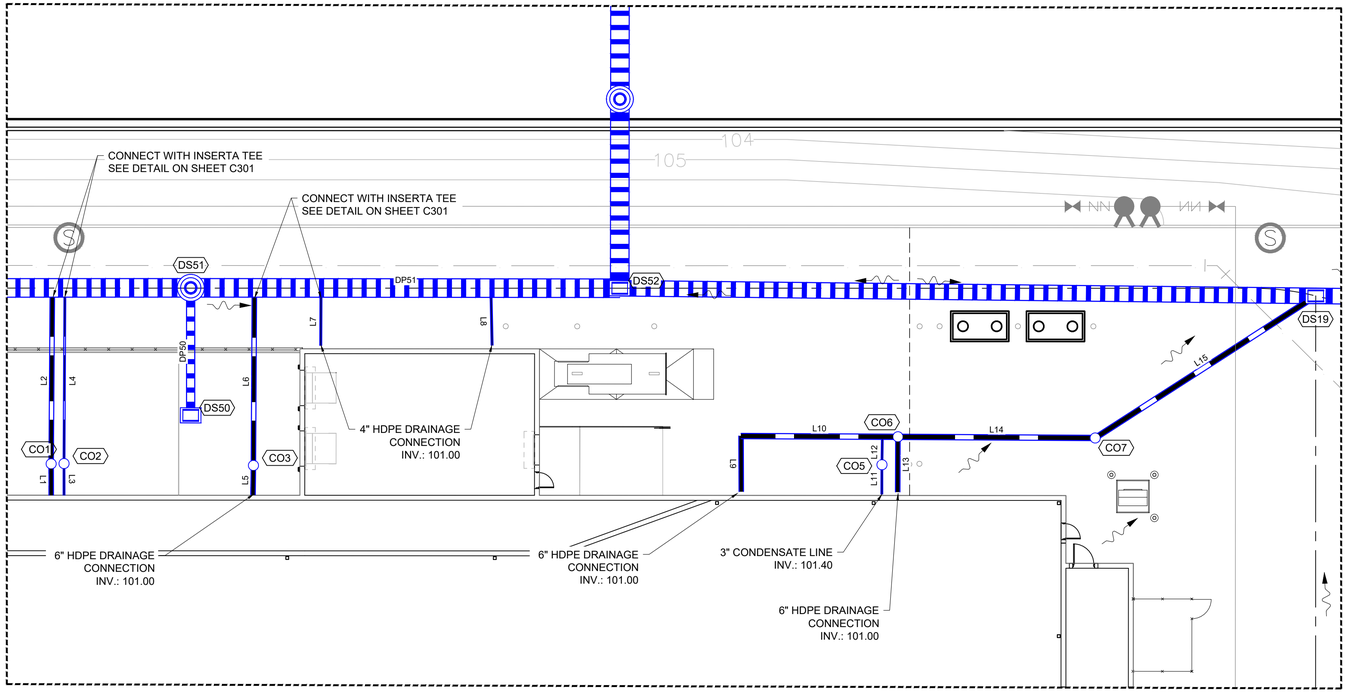

UTILITY DETAIL "A"

SCALE: 1"=15'

PIPE DATA				
NAME	SIZE	MATERIAL	PIPE LENGTH	SLOPE
DP50	15"	PP	25'	0.79%
L1	10"	HDPE	6'	4.00%
L2	10"	HDPE	33'	7.09%
L3	4"	HDPE	6'	4.01%
L4	4"	HDPE	33'	3.29%
L5	10"	HDPE	6'	4.32%
L6	10"	HDPE	33'	4.79%
L7	4"	HDPE	9'	68.09%
L8	4"	HDPE	9'	68.88%
L9	10"	HDPE	11'	2.28%

PIPE DATA				
NAME	SIZE	MATERIAL	PIPE LENGTH	SLOPE
L10	12"	HDPE	31'	1.61%
L11	4"	HDPE	6'	6.95%
L12	4"	HDPE	5'	6.95%
L13	10"	HDPE	11'	6.89%
L14	12"	HDPE	39'	0.64%
L15	12"	HDPE	52'	5.29%
L16	6"	HDPE	25'	16.81%
L17	6"	HDPE	12'	16.81%
L18	10"	HDPE	148'	0.50%
L19	6"	HDPE	8'	10.50%

PIPE DATA				
NAME	SIZE	MATERIAL	PIPE LENGTH	SLOPE
L20	6"	HDPE	28'	19.49%
L21	6"	HDPE	18'	11.43%
L22	6"	HDPE	28'	15.25%
L23	6"	HDPE	18'	11.60%
L24	6"	HDPE	28'	15.74%
L25	6"	HDPE	18'	12.00%
L26	6"	HDPE	28'	16.18%
L27	6"	HDPE	18'	12.33%
L28	6"	HDPE	29'	16.38%
L29	12"	HDPE	70'	0.49%

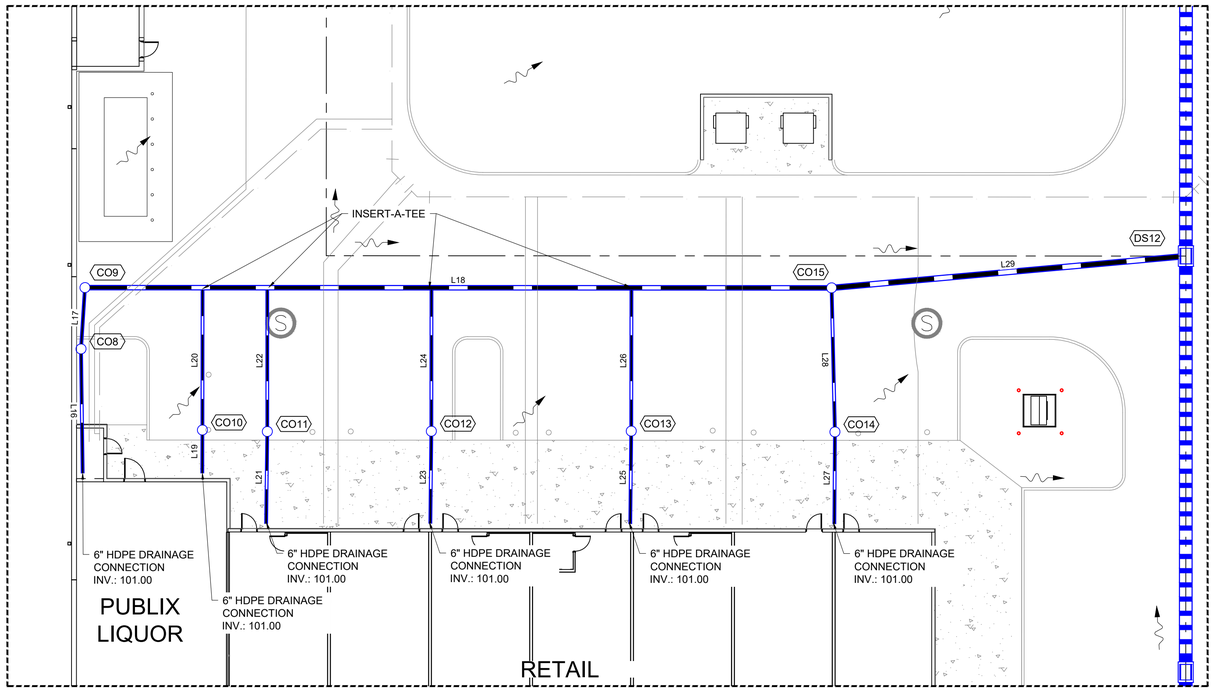

UTILITY DETAIL "B"

SCALE: 1"=15'

MADDEN
MOORHEAD & STOKES, LLC
CIVIL ENGINEERS
431 E. Horatio Avenue
Suite 260
Maitland, Florida 32751
(407) 629-8330
CA# 0007723

DRAINAGE PLAN

FOR

LAKE HILLS SHOPPING CENTER

TOWN OF HOWEY IN THE HILLS FLORIDA

WINDCREST DEVELOPMENT GROUP, INC.
605 E. ROBINSON ST. SUITE 340
ORLANDO, FL 32801
407-219-3540

REVISIONS	DATE
1	
2	
3	
4	
5	
6	
7	
8	
9	
10	
11	

BENJAMIN S. BECKHAM
LICENSE
NO. 79452
STATE OF FLORIDA
PROFESSIONAL ENGINEER

This item has been digitally signed and sealed by Benjamin S. Beckham, PE on the date adjacent to the seal.

Printed copies of this document are not considered signed and sealed and the signature must be verified on any electronic copies.

ENGINEER OF RECORD

JOB #	22041
DATE:	08/06/24
DATUM:	NAVD 88
DESIGNED BY:	KGS
DRAWN BY:	JAS
APPROVED BY:	BSB

C302

THESE DOCUMENTS AND DESIGNS ARE THE PROPERTY OF MADDEN, MOORHEAD & STOKES, LLC AND SHALL NOT BE USED IN WHOLE OR IN PART FOR ANY OTHER PROJECT WITHOUT THE WRITTEN AUTHORIZATION OF MADDEN, MOORHEAD & STOKES, LLC. © COPYRIGHT 2024 MADDEN, MOORHEAD & STOKES, LLC

I:\Data\22041\Civil\01-Lake Hams Pointe\Eng\Final\22041-C302 DRAINAGE PLAN.dwg January 10, 2025 2:27 PM

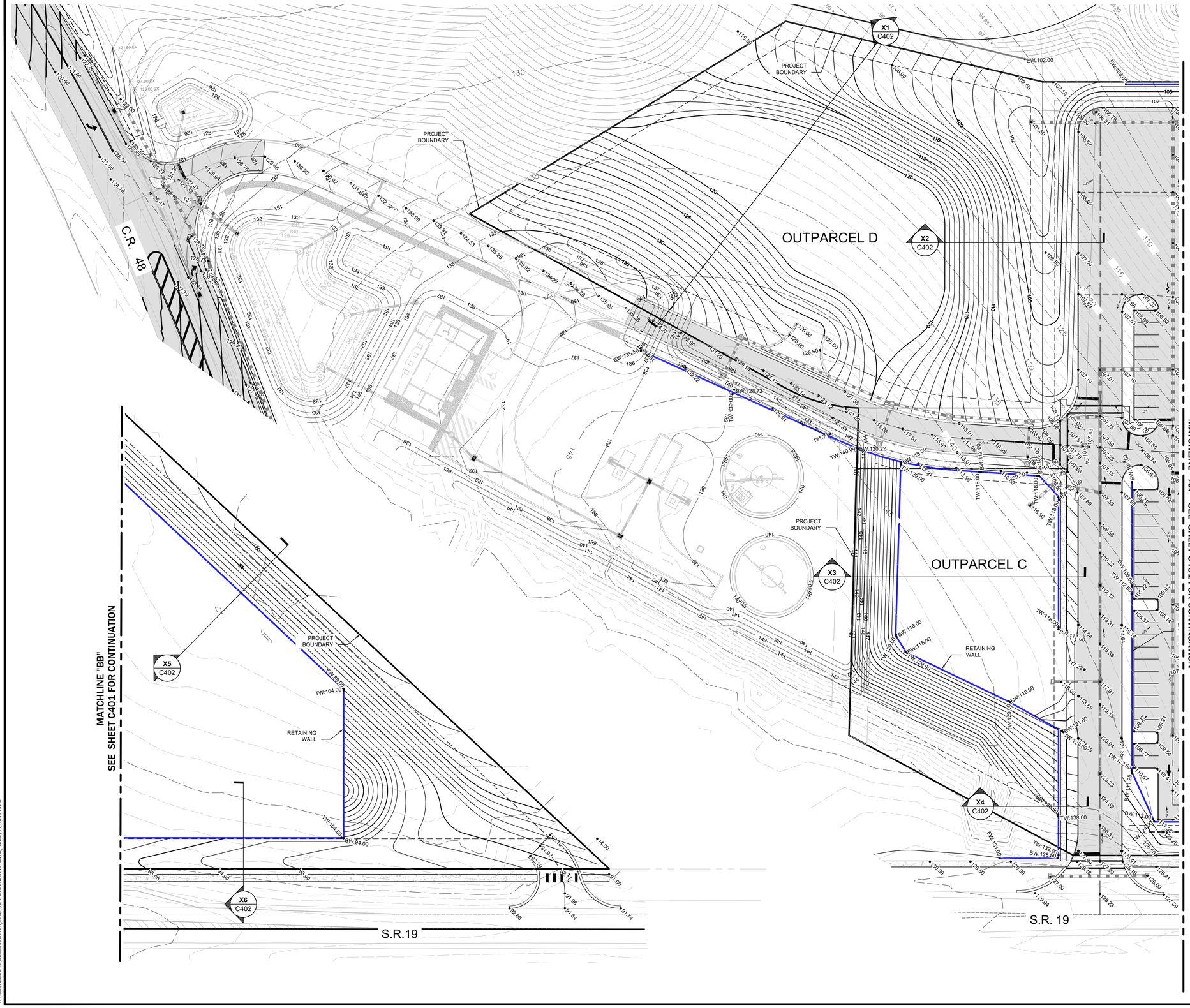

SCALE: 1"=40'

LEGEND

EXISTING	PROPOSED	
		BOUNDARY
		RIGHT OF WAY (MAJOR)
		RIGHT OF WAY (MINOR)
		TRACT LINE
		LOT LINE
		LOT SETBACK
		UTILITY EASEMENT (U.E.)
		DRAINAGE EASEMENT (D.E.)
		EASEMENT (OTHER)
		CURB
		CURB AND GUTTER
		MIAMI CURB
		CONCRETE WALK
+0.00 EX	• 0.00 OR • OR • 0.00 TW • 0.00 BW	SPOT ELEVATION
	• 0.00 LP • 0.00 HP	ROAD ℄ ELEVATION
30	30	CONTOUR (MAJOR)
29	29	CONTOUR (MINOR)
		DIRECTION OF SURFACE FLOW
		NORMAL WATER LEVEL
		SEASON HIGH WATER LEVEL
		POND MAINTENANCE BERM
DS-100	DS-100	STORM STRUCTURE NUMBER
		STORM DRAINAGE MANHOLE
		STORM DRAINAGE INLET
		CONTROL STRUCTURE
	OR	OUTFALL STRUCTURE
	OUT-1	PIPE END (OUTFALL)
B-1		SOIL BORING
R-1		SOIL BORING (ROADWAY)
P-1		SOIL BORING (POND)
	D.S.	DOWNSPOUT

MADDEN
MOORHEAD & STOKES, LLC
CIVIL ENGINEERS
431 E. Horatio Avenue
Suite 260
Maitland, Florida 32751
(407) 629-8330
CA# 0007723

GRADING PLAN
FOR
LAKE HILLS SHOPPING CENTER
TOWN OF HOWEY IN THE HILLS FLORIDA

WINDCREST DEVELOPMENT GROUP, INC.
605 E. ROBINSON ST. SUITE 340
ORLANDO, FL 32801
407-219-3540

	DATE	REVISIONS
1		
2		
3		
4		
5		
6		
7		
8		
9		
10		
11		

BENJAMIN S. BECKHAM
LICENSE
NO. 79452
STATE OF FLORIDA
PROFESSIONAL ENGINEER

This item has been digitally signed and sealed by Benjamin S. Beckham, PE on the date adjacent to the seal.

Printed copies of this document are not considered signed and sealed and the signature must be verified on any electronic copies.

ENGINEER OF RECORD

JOB #	22041
DATE:	08/06/24
DATUM:	NAVD 88
DESIGNED BY:	KGS
DRAWN BY:	JAS
APPROVED BY:	BSB

C400

THESE DOCUMENTS AND THEIR CONTENTS ARE THE PROPERTY OF MADDEN, MOORHEAD & STOKES, LLC. AND ARE ISSUED ONLY FOR THE SPECIFIC PROJECT NOTED ON THESE DRAWINGS. ANY REPRODUCTIONS, REVISIONS OR MODIFICATIONS OF THESE DOCUMENTS WITHOUT THE EXPRESSED WRITTEN CONSENT OF MADDEN, MOORHEAD & STOKES, LLC. IS PROHIBITED BY LAW.

H:\Data\22\MMS\0410-Lake Harris Public\Eng\Final\22041-C400-GRADING PLAN.dwg January 10, 2025 2:29 PM

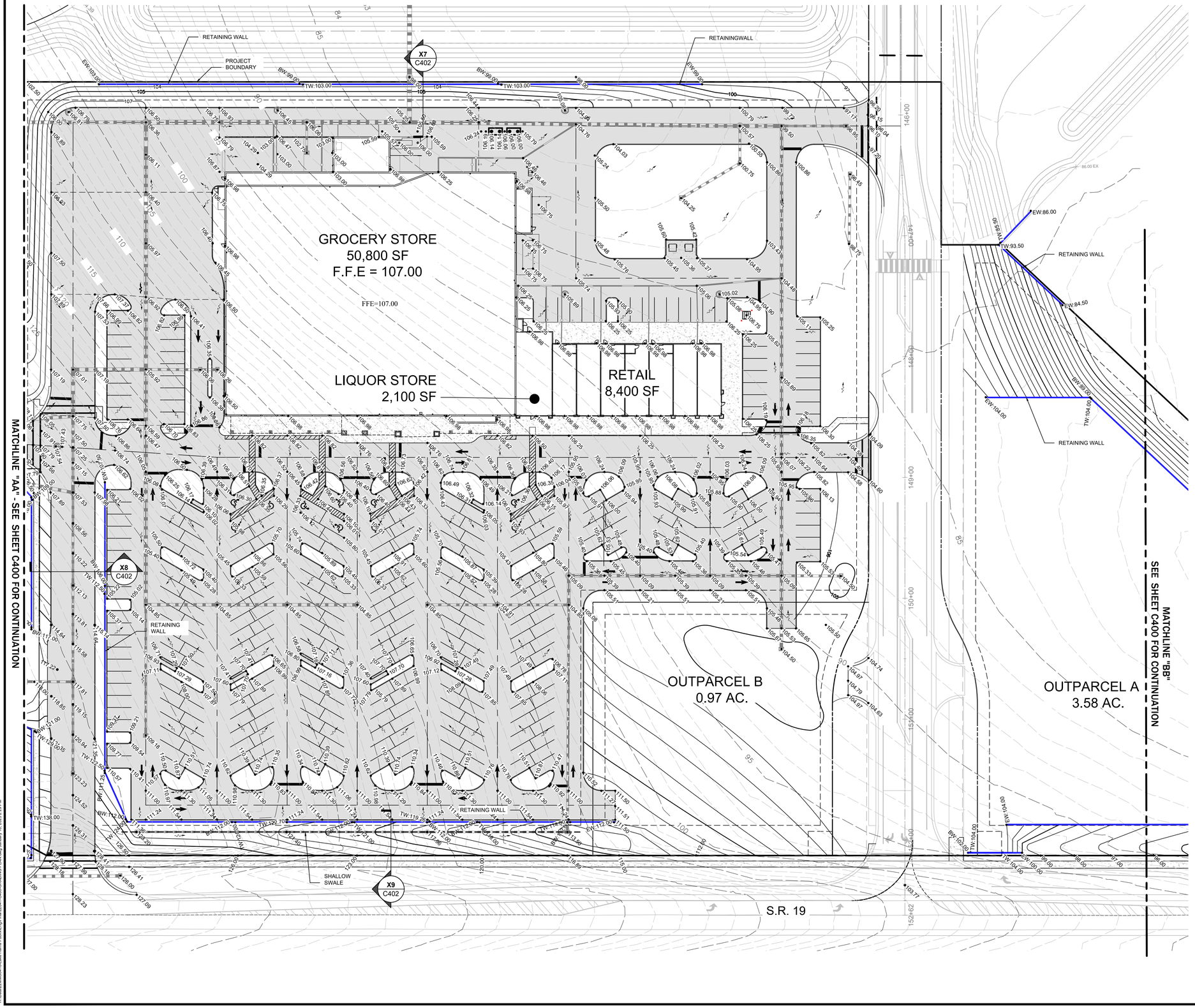

0 20' 40' 80'
SCALE: 1"=40'

LEGEND

EXISTING	PROPOSED	
		BOUNDARY
		RIGHT OF WAY (MAJOR)
		RIGHT OF WAY (MINOR)
		TRACT LINE
		LOT LINE
		LOT SETBACK
		UTILITY EASEMENT (U.E.)
		DRAINAGE EASEMENT (D.E.)
		EASEMENT (OTHER)
		CURB
		CURB AND GUTTER
		MIAMI CURB
		CONCRETE WALK
0.00 EX	0.00 OR, OR 0.00 TW, 0.00 BW	SPOT ELEVATION
	0.00 LP, 0.00 HP	ROAD ℄ ELEVATION
30	30	CONTOUR (MAJOR)
29	29	CONTOUR (MINOR)
		DIRECTION OF SURFACE FLOW
		NORMAL WATER LEVEL
		SEASON HIGH WATER LEVEL
		POND MAINTENANCE BERM
DS-100	DS-100	STORM STRUCTURE NUMBER
		STORM DRAINAGE MANHOLE
		STORM DRAINAGE INLET
		CONTROL STRUCTURE
	OR	OUTFALL STRUCTURE
	OUT-1	PIPE END (OUTFALL)
B-1		SOIL BORING
R-1		SOIL BORING (ROADWAY)
P-1		SOIL BORING (POND)
	D.S.	DOWNSPOUT

MADDEN
MOORHEAD & STOKES, LLC
CIVIL ENGINEERS
431 E. Horatio Avenue
Suite 260
Maitland, Florida 32751
(407) 629-8330
CA# 0007723

GRADING PLAN
FOR
LAKE HILLS SHOPPING CENTER
TOWN OF HOWEY IN THE HILLS FLORIDA

WINDCREST DEVELOPMENT GROUP, INC.
605 E. ROBINSON ST. SUITE 340
ORLANDO, FL 32801
407-219-3540

	DATE	REVISIONS
1		
2		
3		
4		
5		
6		
7		
8		
9		
10		
11		

BENJAMIN S. BECKHAM
LICENSE
NO. 79452
STATE OF FLORIDA
PROFESSIONAL ENGINEER

This item has been digitally signed and sealed by Benjamin S. Beckham, PE on the date adjacent to the seal.

Printed copies of this document are not considered signed and sealed and the signature must be verified on any electronic copies.

ENGINEER OF RECORD

JOB #	22041
DATE:	08/06/24
DATUM:	NAVD 88
DESIGNED BY:	KGS
DRAWN BY:	JAS
APPROVED BY:	BSB

C401

H:\Data\22MMS0410-Lake Harris Public\Eng\Final\22041-C400-GRADING PLAN.dwg January 10, 2025 2:29 PM

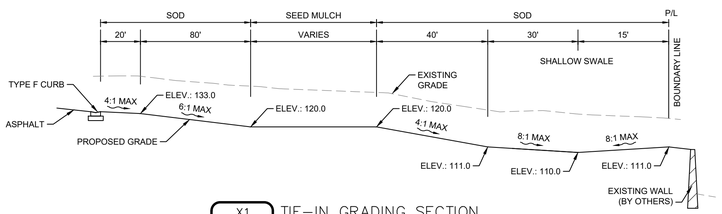

X1 — TIE–IN GRADING SECTION
– — N.T.S.

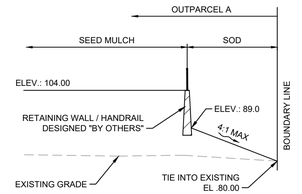

X5 — TIE–IN GRADING SECTION
– — N.T.S.

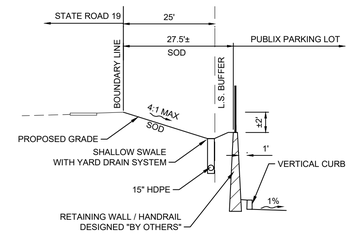

X9 — TIE–IN GRADING SECTION
– — N.T.S.

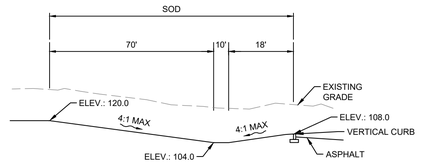

X2 — TIE–IN GRADING SECTION
– — N.T.S.

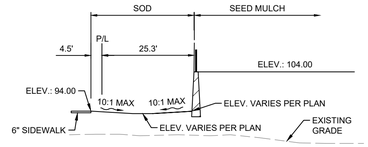

X6 — TIE–IN GRADING SECTION
– — N.T.S.

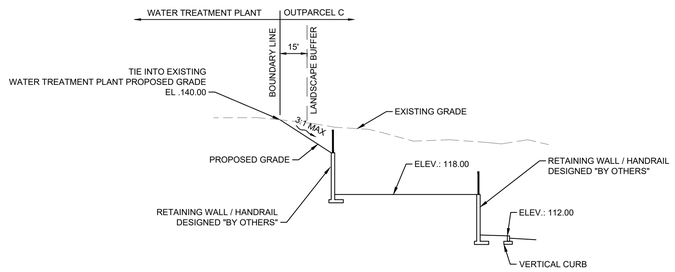

X3 — TIE–IN GRADING SECTION
– — N.T.S.

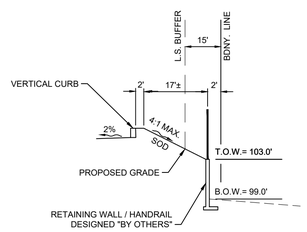

X7 — TIE–IN GRADING SECTION
– — N.T.S.

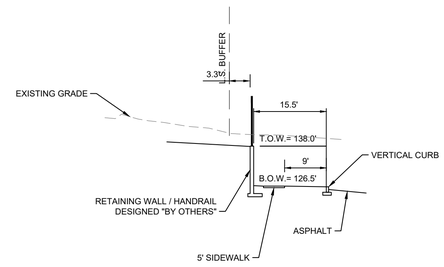

X4 — TIE–IN GRADING SECTION
– — N.T.S.

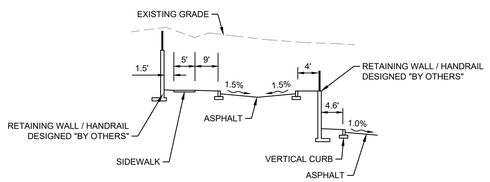

X8 — TIE–IN GRADING SECTION
– — N.T.S.

MADDEN
MOORHEAD & STOKES, LLC
CIVIL ENGINEERS
431 E. Horatio Avenue
Suite 260
Maitland, Florida 32751
(407) 629-8330
CA# 0007723

GRADING PLAN
FOR
LAKE HILLS SHOPPING CENTER
TOWN OF HOWEY IN THE HILLS — FLORIDA

WINDCREST DEVELOPMENT GROUP, INC.
605 E. ROBINSON ST. SUITE 340
ORLANDO, FL 32801
407-219-3540

#	DATE	REVISIONS
1		
2		
3		
4		
5		
6		
7		
8		
9		
10		
11		

BENJAMIN S. BECKHAM
LICENSE
NO. 79452
STATE OF FLORIDA
PROFESSIONAL ENGINEER

This item has been digitally signed and sealed by Benjamin S. Beckham, PE on the date adjacent to the seal.

Printed copies of this document are not considered signed and sealed and the signature must be verified on any electronic copies.

ENGINEER OF RECORD

JOB #	22041
DATE:	08/06/24
DATUM:	NAVD 88
DESIGNED BY:	KGS
DRAWN BY:	JAS
APPROVED BY:	BSB

C402

THESE DOCUMENTS AND THEIR CONTENTS ARE THE PROPERTY OF MADDEN, MOORHEAD & STOKES, LLC. ANY REPRODUCTION, UNAUTHORIZED USE OR DISCLOSURE OF THESE DOCUMENTS WITHOUT THE WRITTEN CONSENT OF MADDEN, MOORHEAD & STOKES, LLC IS STRICTLY PROHIBITED.

H:\Data\22041\Civil\10-Lake Hams Pointe\Eng\Final\22041-C402-GRADING PLAN.dwg January 10, 2025 2:29 PM

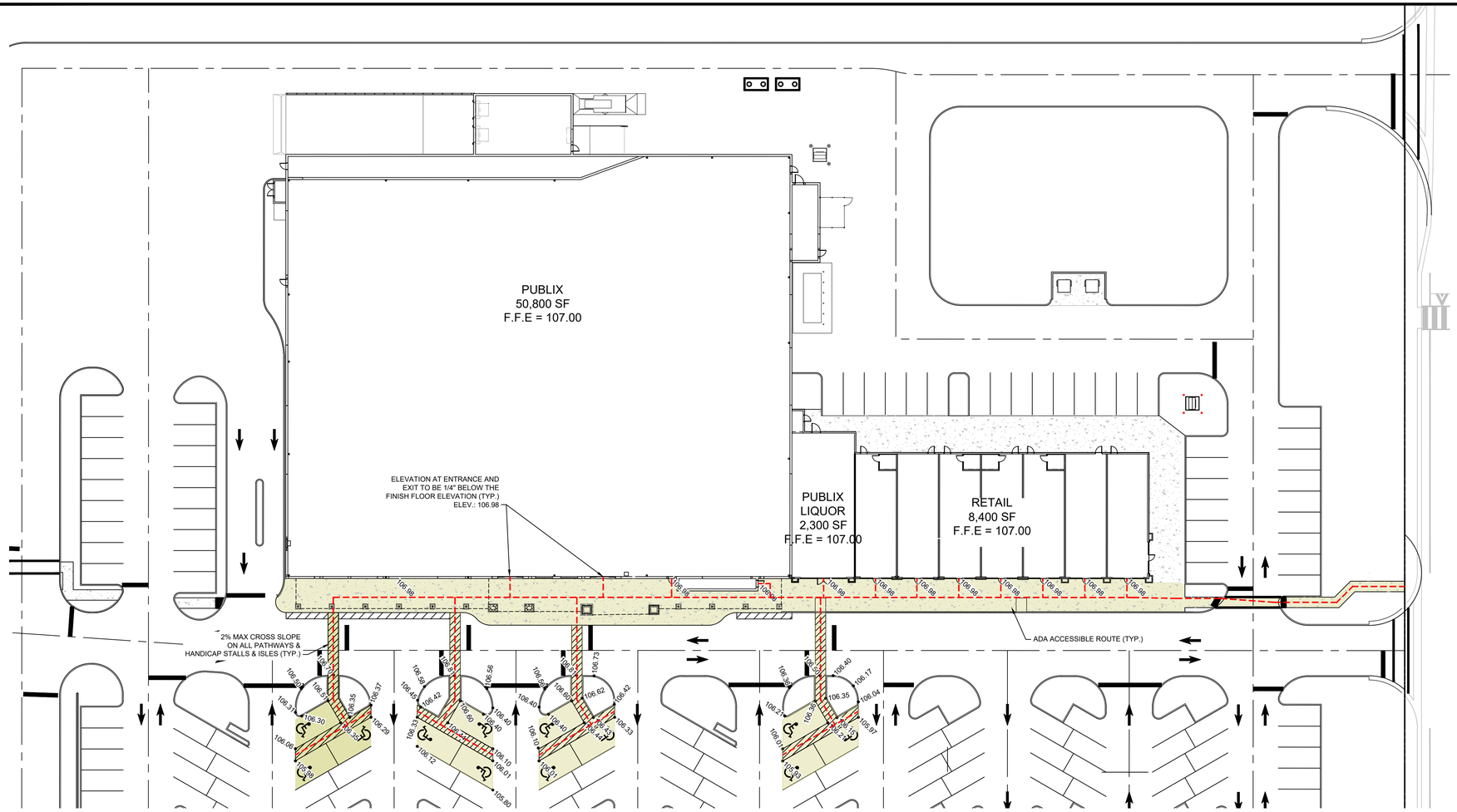

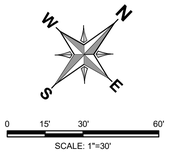

LEGEND

ADA ACCESSIBLE PATH

GENERAL NOTES:

1. PARKING:

REQUIRED:	306 SPACES
	5 SPACES PER 1,000SF OF BUILDING. AREA
	(61,300 SF / 1,000 SF) * 5 = 306 SPACES MIN.
PROVIDED:	12 HANDICAP SPACES
	294 STANDARD SPACES
	306 SPACES TOTAL

MADDEN
MOORHEAD & STOKES, LLC
CIVIL ENGINEERS
431 E. Horatio Avenue
Suite 260
Maitland, Florida 32751
(407) 629-8330
CA# 0007723

ADA ACCESIBILITY PLAN

FOR

LAKE HILLS SHOPPING CENTER

TOWN OF HOWEY IN THE HILLS FLORIDA

WINDCREST DEVELOPMENT GROUP, INC.
605 E. ROBINSON ST - SUITE 340
ORLANDO, FL 32801
407-219-3540

	DATE	REVISIONS
1		
2		
3		
4		
5		
6		
7		
8		
9		
10		
11		

THESE DOCUMENTS ARE THE PROPERTY OF MADDEN, MOORHEAD & STOKES, LLC AND ARE NOT TO BE USED IN WHOLE OR IN PART FOR ANY OTHER PROJECT WITHOUT THE EXPRESSED WRITTEN CONSENT OF MADDEN, MOORHEAD & STOKES, LLC. © COPYRIGHT 2024

BENJAMIN S. BECKHAM
LICENSE
NO. 79452
STATE OF
FLORIDA
PROFESSIONAL ENGINEER

This item has been digitally signed and sealed by Benjamin S. Beckham, PE on the date adjacent to the seal.

Printed copies of this document are not considered signed and sealed and the signature must be verified on any electronic copies.

ENGINEER OF RECORD

JOB #	22041
DATE:	08/06/24
DATUM:	NAVD 88
DESIGNED BY:	KGS
DRAWN BY:	JAS
APPROVED BY:	BSB

C410

MCCUE CRASHCORE BOLLARD REQUIRED AT ENTRY/EXIT AND CUSTOMER SEATING AREAS

PLACE @ 5'-6" OC

CONTRACTORS NOTE:

BOLLARDS SUPPLIED AND INSTALLED BY MCCUE PRIOR TO SIDEWALK BEING POURED. NO SUBSTITUTIONS. CONTACT MCCUE AND PUBLIX TO RECEIVE PUBLIX NATIONAL ACCOUNT PRICING FOR MATERIALS AND INSTALLATION.

ORDERING INFORMATION AND TIMING:

ORDER: 4 WEEKS PRIOR TO SIDEWALK POUR
RECEIVE: 2 WEEKS PRIOR TO SIDEWALK POUR
INSTALLATION: 1 WEEK PRIOR TO SIDEWALK POUR

CONTACT INFO:	YANI DE LA CRUZ
EMAIL:	YDELACRUZ@MCCUE.COM
DIRECT:	978-219-5282
OFFICE ADDRESS:	MCCUE, 13 CENTENNIAL DRIVE PEABODY, MA 01960
WEBSITE:	MCCUE.COM

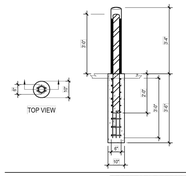

ACCEPTABLE DETAILS FOR BOLLARDS PROTECTING EQUIPMENT AND BUILDING COMPONENTS

PLACE AS NEEDED

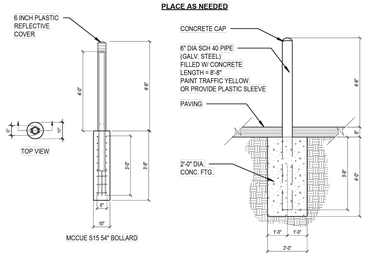

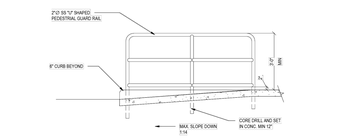

SECTION

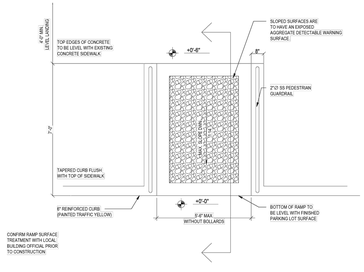

RETURN CURB RAMP DETECTABLE WARNING PLAN

USE IN FRONT OF PUBLIX STORE

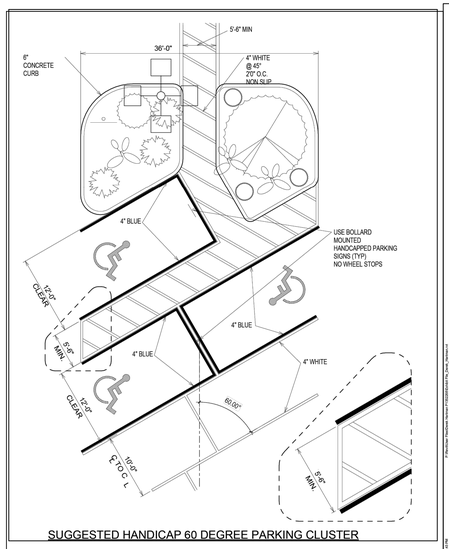

SUGGESTED HANDICAP 60 DEGREE PARKING CLUSTER

CONCRETE ISLAND WITH FLEXIBLE DELINEATOR POSTS (LANDSCAPE ISLAND MAYBE USED AS AN ALTERNATIVE IF WIDTH EXCEEDS 2'-6". PLANTING TYPE AND PLACEMENT SHOULD DETER PEDESTRIAN FOOT TRAFFIC, I.E. SHRUB OR HEDGE).

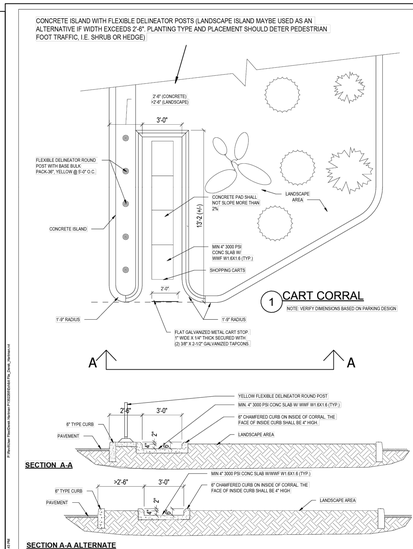

H:\Data\22\MSB\01\Lake Hamis Public\Engr\Final\2041-C410-ADA ACCESIBILITY PLANS.dwg January 19, 2023 2:29 PM
Autodesk Docs://Lake Hamis Public/2041-C410-ADA ACCESIBILITY PLANS.dwg

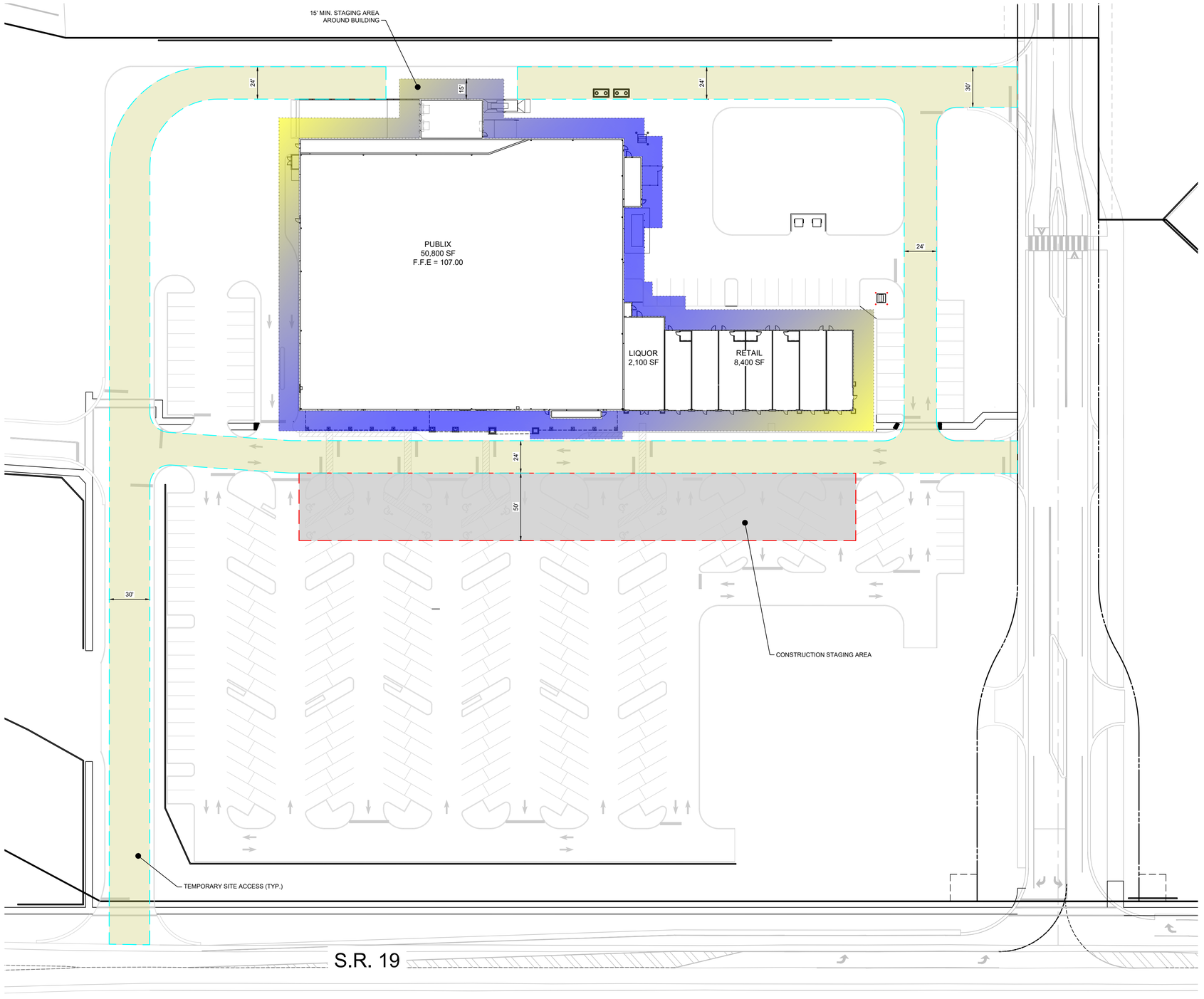

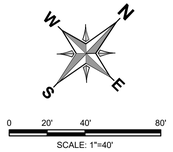

LEGEND

- TEMPORARY SITE ACCESS "SEE SHEET C007 FOR SWPPP CRITERIA AND CONSTRUCTION ACCESS"
- CONSTRUCTION STAGING AREA
- 15' MIN STAGING AREA AROUND BUILDING

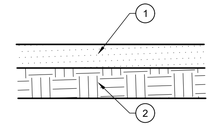

1. 8" OF LIME ROCK BASE. THE BASE COURSE SHOULD BE COMPACTED TO A MINIMUM DENSITY OF 98 PERCENT OF THE MODIFIED PROCTOR MAXIMUM DRY DENSITY AND EXHIBIT A MINIMUM LBR OF 100. THE LIMEROCK MATERIAL SHOULD COMPLY WITH THE LATEST EDITION OF THE FLORIDA DEPARTMENT OF TRANSPORTATION (FDOT) ROAD AND BRIDGE CONSTRUCTION SPECIFICATIONS.

   OR

   8" OF RECYCLED CONCRETE AGGREGATE (RCA) BASE.THE BASE COURSE MATERIAL SHOULD BE SOURCED FROM AN FDOT APPROVED SUPPLIER. THE BASE SHOULD BE COMPACTED TO A MINIMUM DENSITY OF 98 PERCENT OF THE MODIFIED PROCTOR MAXIMUM DRY DENSITY AND EXHIBIT A MINIMUM LBR OF 150. THE BASE MATERIAL SHOULD COMPLY WITH THE CRITERIA LISTED IN THE LATEST EDITION OF THE FDOT ROAD AND BRIDGE CONSTRUCTION SPECIFICATIONS.

2. 12" OF STABILIZED SUBGRADE MATERIALS IMMEDIATELY BENEATH THE BASE COURSE EXHIBIT A MINIMUM LIMEROCK BEARING RATIO (LBR) OF 40 AS SPECIFIED BY FLORIDA DEPARTMENT OF TRANSPORTATION (FDOT). THE STABILIZED SUBGRADE SHOULD BE COMPACTED TO AT LEAST 98 PERCENT OF THE MODIFIED PROCTOR MAXIMUM DRY DENSITY (ASTM D 1557) VALUE.

NOTE:
CONTRACTOR IS RESPONSIBLE FOR PROVIDING ADDITIONAL STABILIZATION IN AREAS THEY DEEM NECESSARY.

TEMPORARY SITE ACCESS AND CONSTRUCTION STAGING AREA PAVEMENT DETAIL

N.T.S.

MADDEN
MOORHEAD & STOKES, LLC
CIVIL ENGINEERS
431 E. Horatio Avenue
Suite 260
Maitland, Florida 32751
(407) 629-8330
CA# 0007723

TEMPORARY SITE ACCESS AND STAGING PLAN

FOR

LAKE HILLS SHOPPING CENTER

TOWN OF HOWEY IN THE HILLS FLORIDA

WINDCREST DEVELOPMENT GROUP, INC.
605 E. ROBINSON ST. SUITE 340
ORLANDO, FL 32801
407-219-3540

	DATE	REVISIONS
1		
2		
3		
4		
5		
6		
7		
8		
9		
10		
11		

BENJAMIN S. BECKHAM
LICENSE
NO. 79452
STATE OF FLORIDA
PROFESSIONAL ENGINEER

This item has been digitally signed and sealed by Benjamin S. Beckham, PE on the date adjacent to the seal.

Printed copies of this document are not considered signed and sealed and the signature must be verified on any electronic copies.

ENGINEER OF RECORD

JOB #	22041
DATE:	08/06/24
DATUM:	NAVD 88
DESIGNED BY:	KGS
DRAWN BY:	JAS
APPROVED BY:	BSB

C411

THESE DOCUMENTS AND THEIR CONTENTS ARE THE PROPERTY OF MADDEN, MOORHEAD & STOKES, LLC AND ARE ISSUED ONLY FOR THE SPECIFIC PROJECT NOTED ON THESE DRAWINGS. ANY REPRODUCTIONS, REVISIONS OR MODIFICATIONS OF THESE DOCUMENTS WITHOUT THE EXPRESSED WRITTEN CONSENT OF MADDEN, MOORHEAD & STOKES, LLC, IS PROHIBITED BY LAW.

H:\Data\22MMS0410-Lake Harris Public\Eng\Final\22041-C411-TEMP ACCESS STAGE PLAN.dwg January 10, 2025 2:30 PM

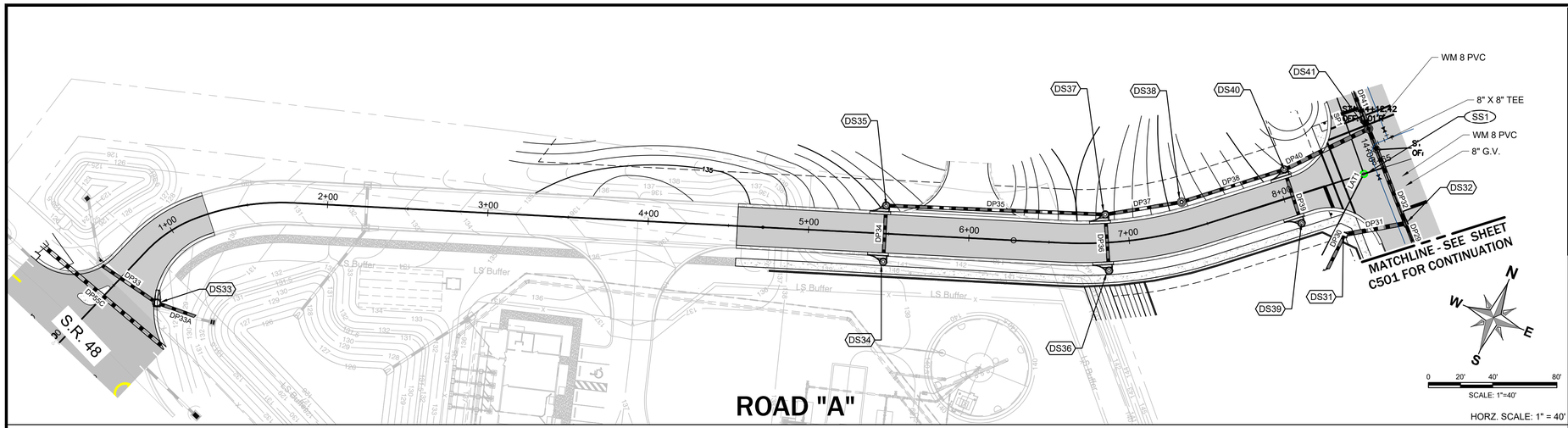

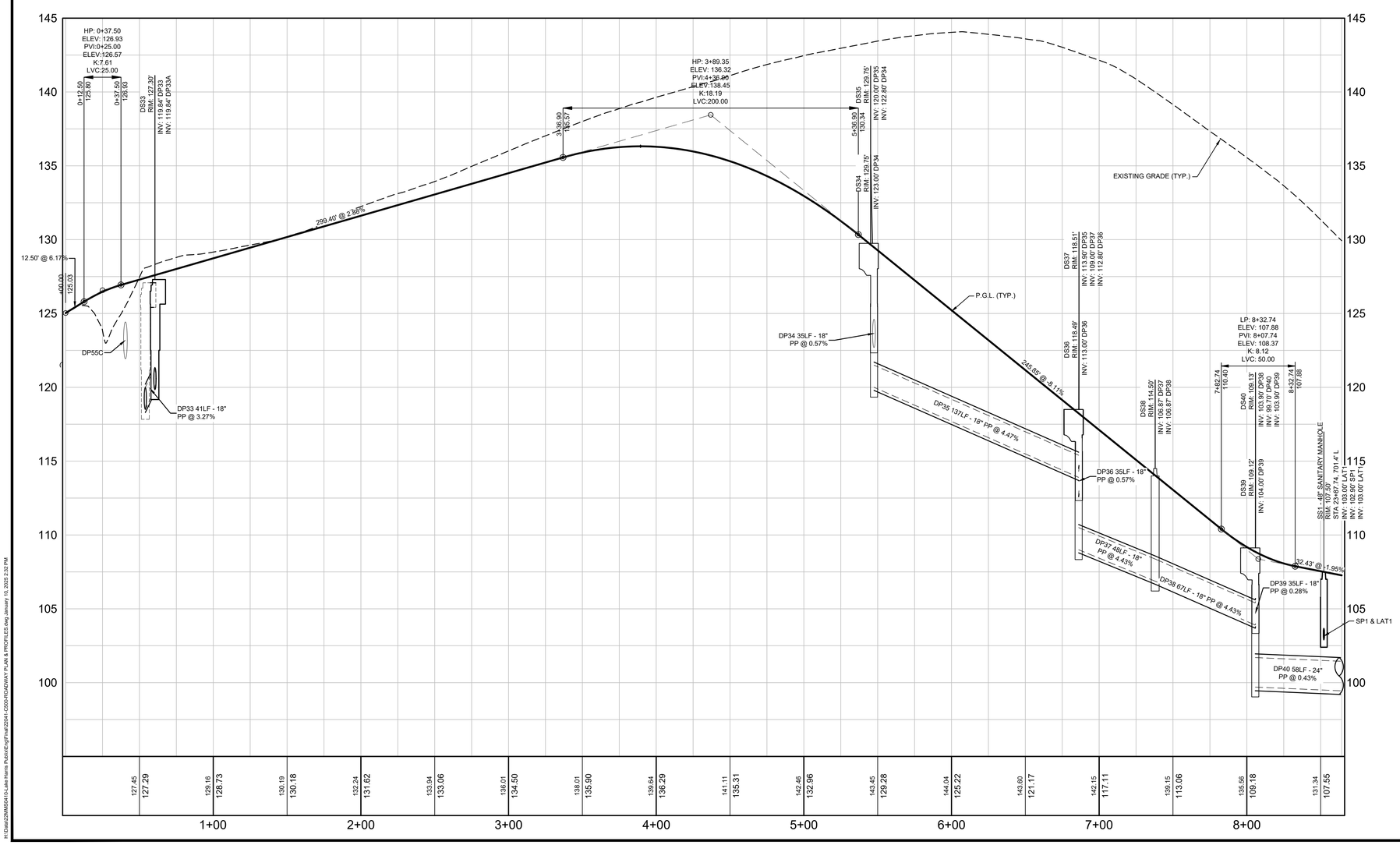

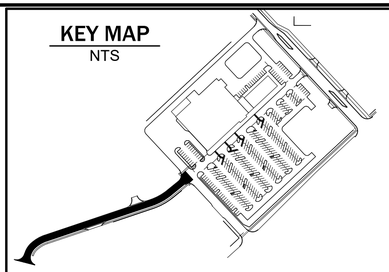

LEGEND

EXISTING	PROPOSED	
		BOUNDARY
		RIGHT OF WAY (MAJOR)
		RIGHT OF WAY (MINOR)
		TRACT LINE
		LOT LINE
		LOT SETBACK
		UTILITY EASEMENT (U.E.)
		DRAINAGE EASEMENT (D.E.)
		EASEMENT (OTHER)
		CURB
		CURB AND GUTTER
		MIAMI CURB
		CONCRETE WALK
		POND MAINTENANCE BERM
DS-100	DS000	STORM STRUCTURE NUMBER
		STORM DRAINAGE MANHOLE
	OR	STORM DRAINAGE INLET
	YD	YARD DRAIN
	OR	OUTFALL STRUCTURE
	OUT-1	PIPE END (OUTFALL)
		FIRE HYDRANT
	WM	WATER MAIN (WM)
	W	WATER SERVICE
	RWM	RECLAIM WATER MAIN (RM)
	FM	FORCE MAIN (FM)
		SANITARY SEWER STRUCTURE #
	S	SANITARY SEWER
		SINGLE SANITARY SERVICE (6")
		DOUBLE SANITARY SERVICE (6")
B-1		SOIL BORING
R-1		SOIL BORING (ROADWAY)
P-1		SOIL BORING (POND)

ESTIMATED WET SEASON WATER TABLE AND WATER TABLE LOCATED ON PROFILE BASED ON BOREHOLES. (REF: UNIVERSAL ENGINEERING SERVICES, PROJECT NO. 0130.2200427.000)

WATER MAIN AND RE-USE WATER LINES SHALL BE BURIED WITH A MINIMUM 36" GROUND COVER.

THE ENGINEER OF RECORD SHALL BE NOTIFIED IF ANY CROSSINGS DO NOT MEET THE REQUIRED SEPARATION CRITERIA PRIOR TO BACKFILLING. THE EOR WILL ASSIST THE PROJECT TEAM IN DETERMINING THE APPROPRIATE MODIFICATIONS NEEDED IN ORDER TO MEET THE SEPARATION REQUIREMENTS. NO BACKFILLING SHALL OCCUR UNTIL AFTER THE MODIFICATIONS ARE APPROVED BY THE OWNER AND AHJ (IF REQUIRED). CORRECTIONS COMPLETED, AND CORRECTIONS HAVE BEEN FIELD VERIFIED.

▽ ESTIMATED SEASONAL HIGH WATER LEVEL

MADDEN
MOORHEAD & STOKES, LLC
CIVIL ENGINEERS
431 E. Horatio Avenue
Suite 260
Maitland, Florida 32751
(407) 629-8330
CA# 0007723

ROADWAY PLAN & PROFILES
FOR
LAKE HILLS SHOPPING CENTER
TOWN OF HOWEY IN THE HILLS FLORIDA

WINDCREST DEVELOPMENT GROUP, INC.
605 E. ROBINSON ST. SUITE 340
ORLANDO, FL 32801
407-219-3540

	DATE	REVISIONS
1		
2		
3		
4		
5		
6		
7		
8		
9		
10		
11		

BENJAMIN S. BECKHAM
LICENSE
NO. 79452
STATE OF FLORIDA
PROFESSIONAL ENGINEER

This item has been digitally signed and sealed by Benjamin S. Beckham, PE on the date adjacent to the seal.

Printed copies of this document are not considered signed and sealed and the signature must be verified on any electronic copies.

ENGINEER OF RECORD

JOB #	22041
DATE:	08/06/24
DATUM:	NAVD 88
DESIGNED BY:	KGS
DRAWN BY:	JAS
APPROVED BY:	BSB

C500

THESE DOCUMENTS AND DESIGNS ARE AND SHALL REMAIN THE PROPERTY OF MADDEN, MOORHEAD & STOKES, LLC AND SHALL NOT BE USED IN WHOLE OR IN PART FOR ANY OTHER PROJECT WITHOUT THE WRITTEN AUTHORIZATION OF MADDEN, MOORHEAD & STOKES, LLC. © COPYRIGHT 2024 MADDEN, MOORHEAD & STOKES, LLC

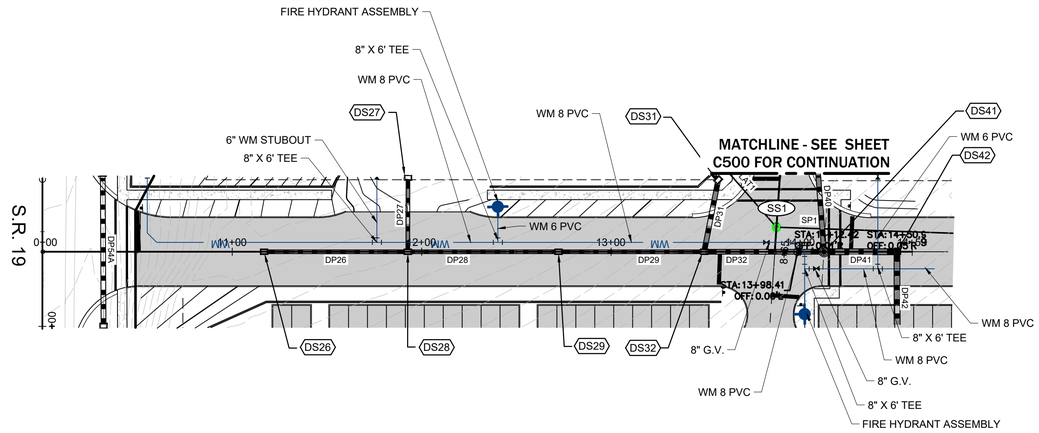

0 20' 40' 80'

SCALE: 1"=40'

KEY MAP

NTS

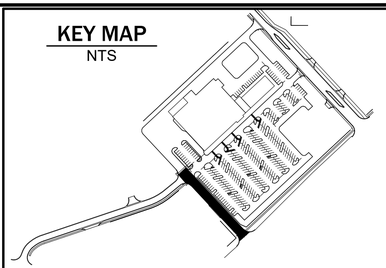

ROAD "A"

HORZ. SCALE: 1" = 40'

VERT. SCALE: 1" = 4'

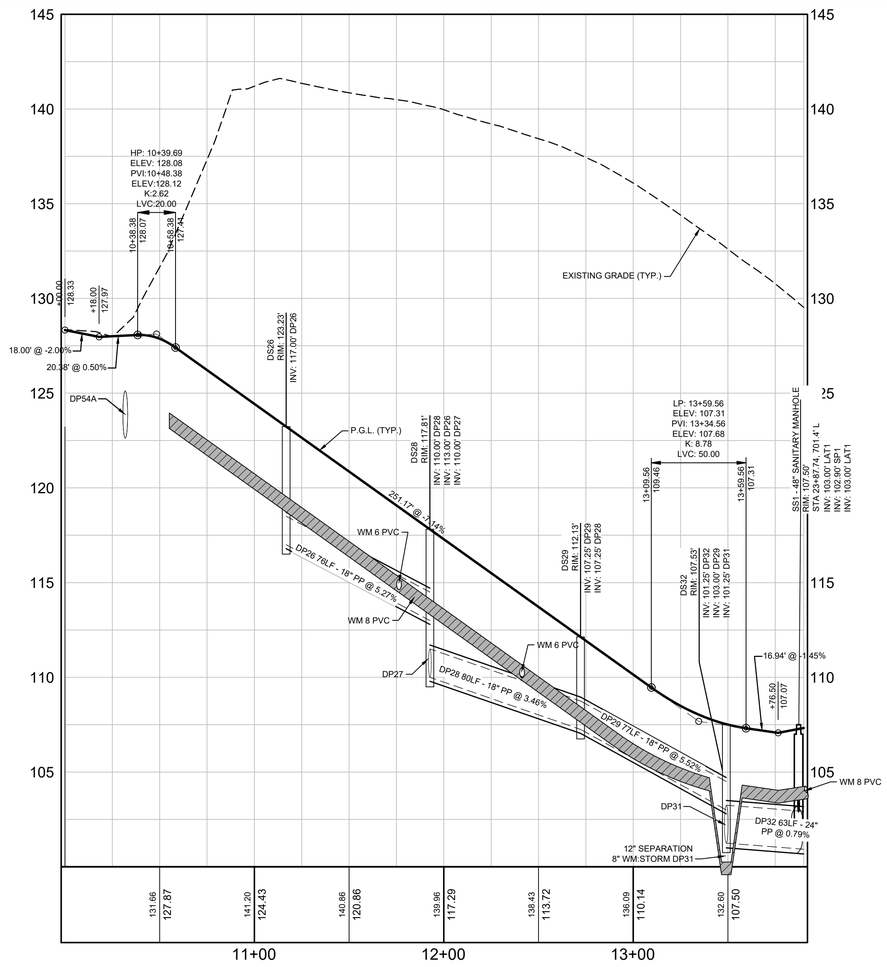

ESTIMATED WET SEASON WATER TABLE AND WATER TABLE LOCATED ON PROFILE BASED ON BOREHOLES. (REF: UNIVERSAL ENGINEERING SERVICES, PROJECT NO. 0130.2200427.000)

WATER MAIN AND RE-USE WATER LINES SHALL BE BURIED WITH A MINIMUM 36" GROUND COVER.

THE ENGINEER OF RECORD SHALL BE NOTIFIED IF ANY CROSSINGS DO NOT MEET THE REQUIRED SEPARATION CRITERIA PRIOR TO BACKFILLING. THE EOR WILL ASSIST THE PROJECT TEAM IN DETERMINING THE APPROPRIATE MODIFICATIONS NEEDED IN ORDER TO MEET THE SEPARATION REQUIREMENTS. NO BACKFILLING SHALL OCCUR UNTIL AFTER THE MODIFICATIONS ARE APPROVED BY THE OWNER AND AHJ (IF REQUIRED), CORRECTIONS COMPLETED, AND CORRECTIONS HAVE BEEN FIELD VERIFIED.

▽ ESTIMATED SEASONAL HIGH WATER LEVEL

LEGEND

EXISTING	PROPOSED	
		BOUNDARY
		RIGHT OF WAY (MAJOR)
		RIGHT OF WAY (MINOR)
		TRACT LINE
		LOT LINE
		LOT SETBACK
		UTILITY EASEMENT (U.E.)
		DRAINAGE EASEMENT (D.E.)
		EASEMENT (OTHER)
		CURB
		CURB AND GUTTER
		MIAMI CURB
		CONCRETE WALK
		POND MAINTENANCE BERM
DS-100	DS000	STORM STRUCTURE NUMBER
		STORM DRAINAGE MANHOLE
		STORM DRAINAGE INLET
		YARD DRAIN
		OUTFALL STRUCTURE
	OUT-1	PIPE END (OUTFALL)
		FIRE HYDRANT
	WM	WATER MAIN (WM)
	WS	WATER SERVICE
	RWM	RECLAIM WATER MAIN (RM)
	FM	FORCE MAIN (FM)
		SANITARY SEWER STRUCTURE #
	S	SANITARY SEWER
		SINGLE SANITARY SERVICE (6")
		DOUBLE SANITARY SERVICE (6")
B-1		SOIL BORING
R-1		SOIL BORING (ROADWAY)
P-1		SOIL BORING (POND)

MADDEN
MOORHEAD & STOKES, LLC
CIVIL ENGINEERS
431 E. Horatio Avenue
Suite 260
Maitland, Florida 32751
(407) 629-8330
CA# 0007723

ROADWAY PLAN & PROFILES

FOR

LAKE HILLS SHOPPING CENTER

TOWN OF HOWEY IN THE HILLS FLORIDA

WINDCREST DEVELOPMENT GROUP, INC.
605 E. ROBINSON ST. SUITE 340
ORLANDO, FL 32801
407-219-3540

#	DATE	REVISIONS
1		
2		
3		
4		
5		
6		
7		
8		
9		
10		
11		

BENJAMIN S. BECKHAM
LICENSE
NO. 79452
STATE OF FLORIDA
PROFESSIONAL ENGINEER

This item has been digitally signed and sealed by Benjamin S. Beckham, PE on the date adjacent to the seal.

Printed copies of this document are not considered signed and sealed and the signature must be verified on any electronic copies.

ENGINEER OF RECORD

JOB #	22041
DATE:	08/06/24
DATUM:	NAVD 88
DESIGNED BY:	KGS
DRAWN BY:	JAS
APPROVED BY:	BSB

C501

THESE DOCUMENTS ARE THE PROPERTY OF MADDEN, MOORHEAD & STOKES, LLC AND ARE NOT TO BE USED IN WHOLE OR IN PART FOR ANY OTHER PROJECT WITHOUT THE EXPRESS WRITTEN AUTHORIZATION OF MADDEN, MOORHEAD & STOKES, LLC. © 2024 MADDEN, MOORHEAD & STOKES, LLC

H:\Data\22041\Civil\04-Lake Hams Pointe\Engr\Hall\22041-C501-ROADWAY PLAN & PROFILES.dwg January 10, 2025 2:33 PM

COUNTY ROAD 48, POSTED SPEED 45 MPH,DESIGN SPEED 45 MPH

DEMOLITION AND EROSION CONTROL PLAN

LEGEND

SF — STAKED EROSION CONTROL FDOT TYPE III SILT FENCE

LIMITS OF 1" MILL

 # DEMOLITION NOTES

1. SINGLE STAKED SILT FENCE. (SEE DETAIL ON SHEET C003.1)
2. EXISTING PAVEMENT 1" MILL
3. DEMO EXISTING STORM

N E S W

0 20' 40' 80'

SCALE: 1"=40'

DIMENSION, STRIPING, AND SIGNAGE PLAN

 # CONSTRUCTION NOTES

1. WHITE THERMOPLASTIC TURN ARROWS (TYP.) PER FDOT INDEX 711-001
2. 6" WHITE SOLID THERMOPLASTIC PER FDOT INDEX 711-001
3. 6" YELLOW SOLID THERMOPLASTIC PER FDOT INDEX 711-001
4. 6" DOUBLE YELLOW THERMOPLASTIC PER FDOT INDEX 711-001
5. 18" YELLOW GORE STRIPE W/ 10' SPACING PER FDOT INDEX 711-001
6. REFLECTIVE PVMT. MARKERS W/ 40' SPACING PER FDOT INDEX 711-001
7. SPECIAL EMPHASIS CROSSWALK STRIPING PER FDOT INDEX # 711-001
8. 24" WHITE THERMOPLASTIC STOP BAR
9. R1-1 STOP SIGN
10. ADA HANDICAP RAMP. FDOT TYPE CR-F
11. 6" WHITE SKIP (6' X 10')

NOTES:

1. MILL EXISTING ROADWAY FULL WIDTH TO 1" MINIMUM DEPTH
2. FINISH GRADE OF SHOULDER TO BE BELOW EDGE OF PVMT. TO ALLOW FOR SOD PER FDOT STANDARD PLANS INDEX 570-010 (FORMERLY INDEX 105)
3. ALL DISTURBED AREAS SHALL BE SODDED
4. ALL UNPAVED AREAS WITHIN ROW SHALL BE SODDED
5. ALL LANE STRIPING TO BE 6" THERMOPLASTIC, UNLESS OTHERWISE NOTED
6. FOR SUPERPAVE UTILIZE TRAFFIC LEVEL C
7. ALL CONSTRUCTION MATERIALS AND ROADWAY DESIGN SHALL BE IN ACCORDANCE WITH THE LATEST LAKE COUNTY STANDARDS
8. ALL SIDEWALKS, DETECTABLE WARNING MATS AND CURB RAMPS SHALL BE BUILT AND INSPECTED TO MEET ADA REQUIREMENTS (MAX DESIGN CROSS-SLOPE = 1.50%; MAX DESIGN LOGITUDINAL SLOPE = 5.00%)
9. ANY DRIVEWAYS DISTURBED BY CONSTRUCTION SHALL BE REBUILT TO EXISTING CONDITIONS OR BETTER
10. ALL MAINTENANCE OF TRAFFIC SHALL BE IN ACCORDANCE WITH FDOT STANDARD PLAN INDEXES (PREFIX 102) 600-608, 625, 628, & 655 AS APPLICABLE

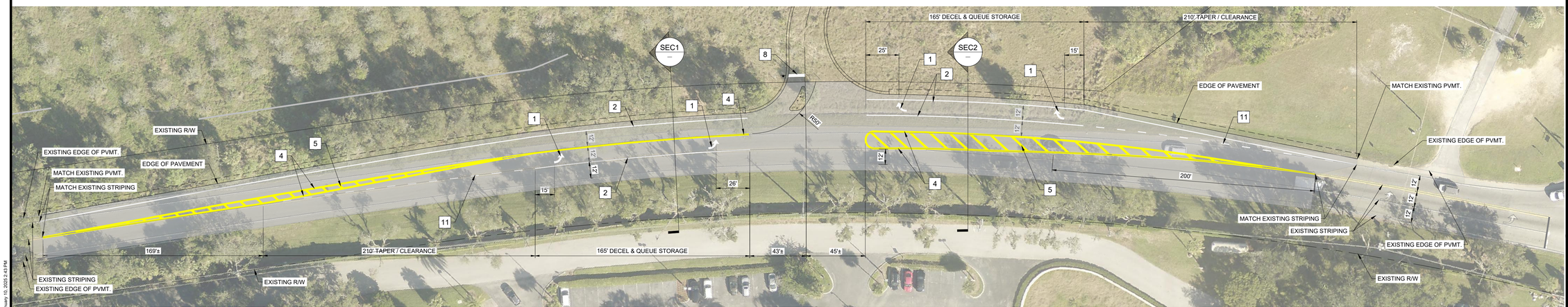

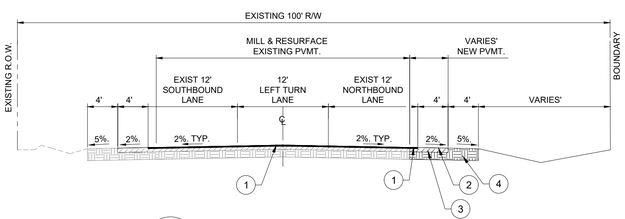

SEC1 — TYPICAL SECTION - 100' R.O.W.
C.R. 33 — N.T.S.

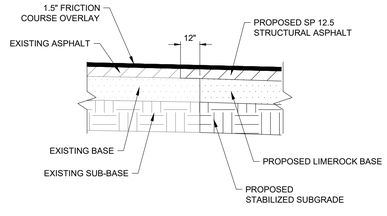

PW — PAVEMENT WIDENING DETAIL
C.R. 33 — N.T.S.

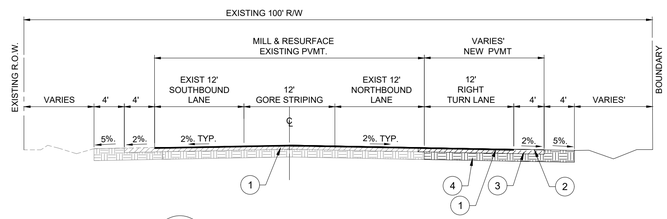

SEC2 — TYPICAL SECTION - 100' R.O.W.
C.R. 33 — N.T.S.

ROADWAY PVMT. SPECIFICATIONS

1. 1.5" FRICTION COURSE FC 12.5
2. 1-1/2 INCHES OF FLORIDA DOT ASPHALTIC CONCRETE MIX OF TYPE SP-9.5 PLACED AND COMPACTED IN ACCORDANCE WITH FLORIDA DEPARTMENT OF TRANSPORTATION SPECIFICATIONS.
3. 6-INCHES OF CRUSHED CONCRETE OR LIMEROCK BASE FROM A FDOT APPROVED MATERIAL PROVIDER, MEETING THE MINIMUM LBR AND GRADATION REQUIREMENTS OF SECTION 911, AND COMPACTED TO A DENSITY OF NOT LESS THAN 98 PERCENT OF THE MATERIAL'S MODIFIED PROCTOR DENSITY VALUE AS DETERMINED BY AASHTO T-180 TEST METHOD.
4. 12-INCHES OF STABILIZED SUBGRADE, MINIMUM LBR EQUAL TO 40, AND COMPACTED TO A MINIMUM DENSITY EQUIVALENT TO 98 PERCENT OF THE SOIL'S MODIFIED PROCTOR DENSITY VALUE AS DETERMINED BY AASHTO T-180 TEST METHOD.

MADDEN
MOORHEAD & STOKES, LLC
CIVIL ENGINEERS
431 E. Horatio Avenue
Suite 260
Maitland, Florida 32751
(407) 629-8330
CA# 0007723

OFFSITE IMPROVEMENTS PLAN
FOR
LAKE HILLS SHOPPING CENTER
TOWN OF HOWEY IN THE HILLS
FLORIDA

THE ACCEPTANCE AND USE OF THESE PLANS AND SPECIFICATIONS SHALL BE DEEMED TO BE AGREEMENT THAT THEY SHALL NOT BE USED BY OWNER OR OTHERS ON ANY OTHER PROJECT, FOR EXTENSIONS TO THIS PROJECT, OR TO COMPLETE THIS PROJECT WITH OTHERS WITHOUT THE SPECIFIC WRITTEN CONSENT OF MADDEN, MOORHEAD & STOKES, LLC. ALL COPYRIGHTS AND OTHER PROPERTY RIGHTS TO THESE PLANS AND SPECIFICATIONS ARE RESERVED BY MADDEN, MOORHEAD & STOKES, LLC. ANY REPRODUCTION, UNAUTHORIZED USE OR DISCLOSURE WITHOUT THE WRITTEN CONSENT OF MADDEN, MOORHEAD & STOKES, LLC IS PROHIBITED.

WINDCREST DEVELOPMENT GROUP, INC.
605 E. ROBINSON ST. SUITE 340
ORLANDO, FL 32801
407-219-3540

#	DATE	REVISIONS
1		
2		
3		
4		
5		
6		
7		
8		
9		
10		
11		

BENJAMIN S. BECKHAM
LICENSE
NO. 79452
STATE OF FLORIDA
PROFESSIONAL ENGINEER

This item has been digitally signed and sealed by Benjamin S. Beckham, PE on the date adjacent to the seal.

Printed copies of this document are not considered signed and sealed and the signature must be verified on any electronic copies.

ENGINEER OF RECORD

JOB #	22041
DATE:	08/06/24
DATUM:	NAVD 88
DESIGNED BY:	KGS
DRAWN BY:	JAS
APPROVED BY:	BSB

C710

H:\Data\22MMS\01\5-Lake Hami Pkdrive\Engr\Final\22041-C712-OFFSITE IMPROVEMENTS PLAN.dwg January 10, 2025 2:43 PM

COUNTY ROAD 48, POSTED SPEED 45 MPH,DESIGN SPEED 45 MPH

STORM STRUCTURE DATA	
NO.	STRUCTURE
DS33	RIM = 127.30' TYPE 5 INLET INV = 119.84 DP33A INV = 119.84 DP33
DS55A	RIM = 130.00' TYPE C INLET INV = 125.00 DP55A
DS55B	RIM = 129.50' TYPE C INLET INV = 124.50 DP55A INV = 124.50 DP55B
DS55C	RIM = 128.75' TYPE C INLET INV = 122.35 DP55B INV = 122.35 DP55C
OUT2	RIM = 119.25' MITER END SECTION INV = 122.00 DP55C

PIPE DATA				
NAME	SIZE	MATERIAL	PIPE LENGTH	SLOPE
DP33	18"	PP	41'	3.27%
DP33A	18"	PP	35'	4.53%
DP55A	24"	PP	93'	0.54%
DP55B	24"	PP	78'	2.76%
DP55C	24"	PP	148'	0.24%

KEY MAP

NTS

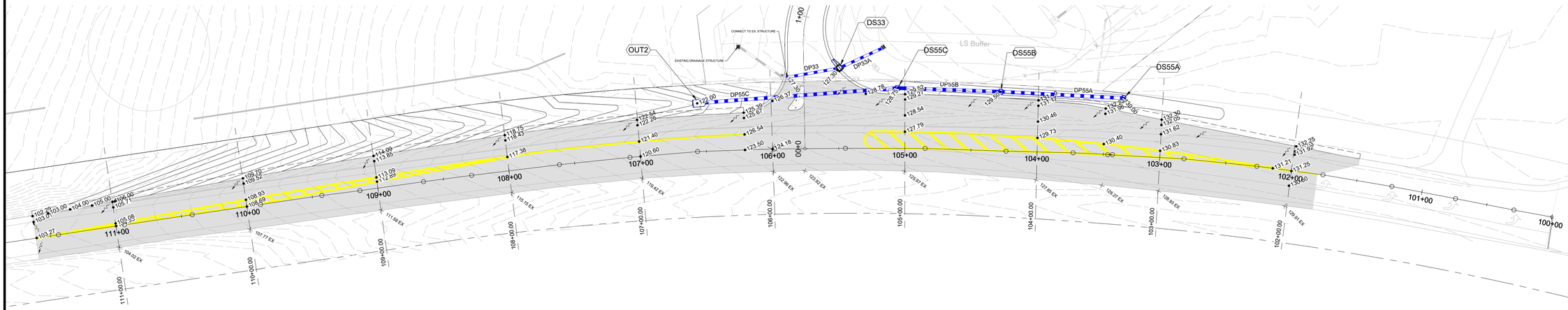

LEGEND

EXISTING | PROPOSED

- BOUNDARY
- RIGHT OF WAY (MAJOR)
- RIGHT OF WAY (MINOR)
- TRACT LINE
- LOT LINE
- LOT SETBACK
- UTILITY EASEMENT (U.E.)
- DRAINAGE EASEMENT (D.E.)
- EASEMENT (OTHER)
- CURB
- CURB AND GUTTER
- MIAMI CURB
- CONCRETE WALK
- SPOT ELEVATION
- ROAD ℄ ELEVATION
- CONTOUR (MAJOR)
- CONTOUR (MINOR)
- DIRECTION OF SURFACE FLOW
- NORMAL WATER LEVEL
- SEASON HIGH WATER LEVEL
- POND MAINTENANCE BERM
- STORM STRUCTURE NUMBER
- STORM DRAINAGE MANHOLE
- STORM DRAINAGE INLET
- CONTROL STRUCTURE
- OUTFALL STRUCTURE
- PIPE END (OUTFALL)

N E S W

0 20' 40' 80'

SCALE: 1"=40'

MADDEN
MOORHEAD & STOKES, LLC
CIVIL ENGINEERS
431 E. Horatio Avenue
Suite 260
Maitland, Florida 32751
(407) 629-8330
CA# 0007723

OFFSITE DRAINAGE AND GRADING PLAN

FOR

LAKE HILLS SHOPPING CENTER

TOWN OF HOWEY IN THE HILLS FLORIDA

WINDCREST DEVELOPMENT GROUP, INC.
605 E. ROBINSON ST. SUITE 340
ORLANDO, FL 32801
407-219-3540

	DATE	REVISIONS
1		
2		
3		
4		
5		
6		
7		
8		
9		
10		
11		

BENJAMIN S. BECKHAM
LICENSE
NO. 79452
STATE OF FLORIDA
PROFESSIONAL ENGINEER

This item has been digitally signed and sealed by Benjamin S. Beckham, PE on the date adjacent to the seal.

Printed copies of this document are not considered signed and sealed and the signature must be verified on any electronic copies.

ENGINEER OF RECORD

JOB #	22041
DATE:	08/06/24
DATUM:	NAVD 88
DESIGNED BY:	KGS
DRAWN BY:	JAS
APPROVED BY:	BSB

C711

H:\Data\22MMS0410-Lake Harris Public\Eng\Final\22041-C711-OFFSITE DRAINAGE AND GRADING.dwg January 10, 2025 2:35 PM

STA: 102+00.00
SCALE: H = 40, V = 20

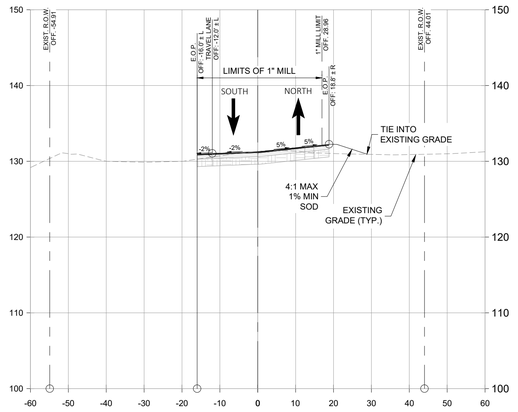

STA: 103+00.00
SCALE: H = 40, V = 20

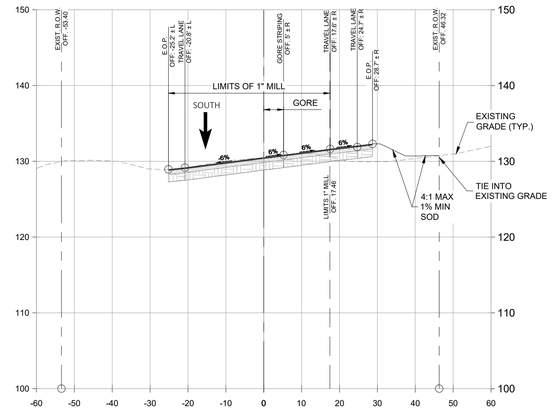

STA: 104+00.00
SCALE: H = 40, V = 20

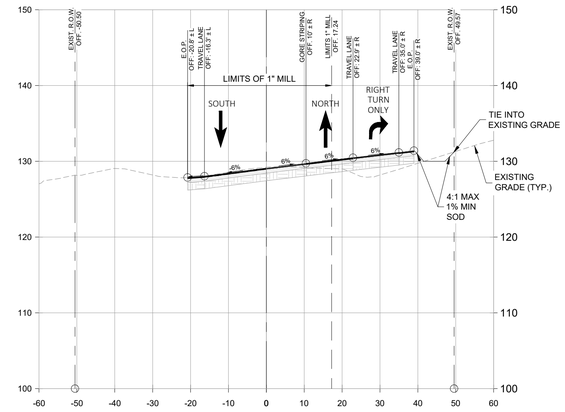

STA: 105+00.00
SCALE: H = 40, V = 20

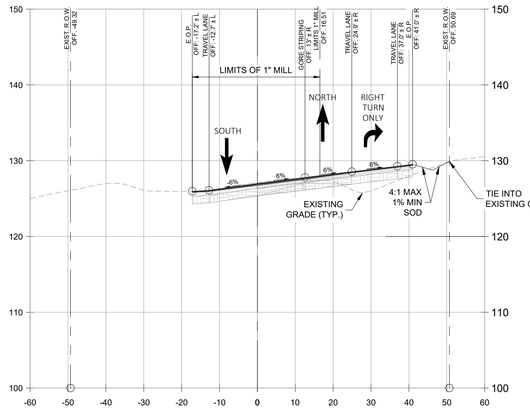

STA: 106+00.00
SCALE: H = 40, V = 20

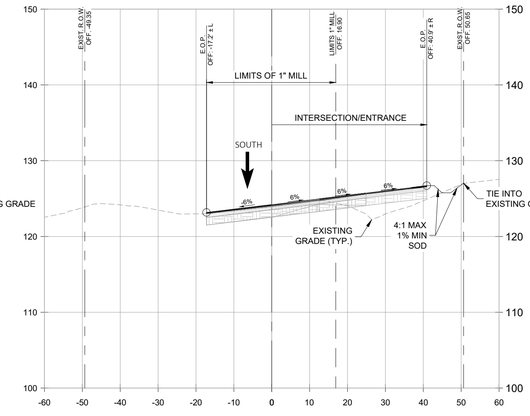

STA: 107+00.00
SCALE: H = 40, V = 20

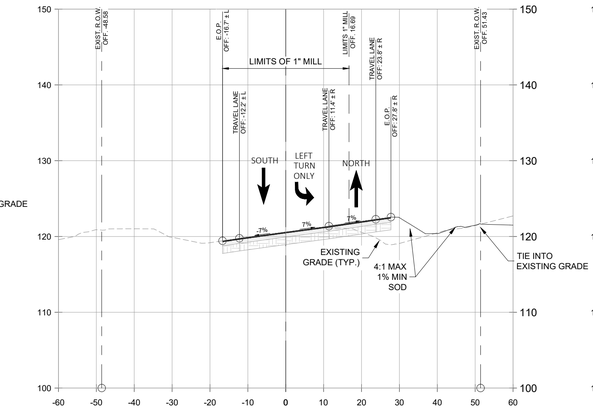

STA: 108+00.00
SCALE: H = 40, V = 20

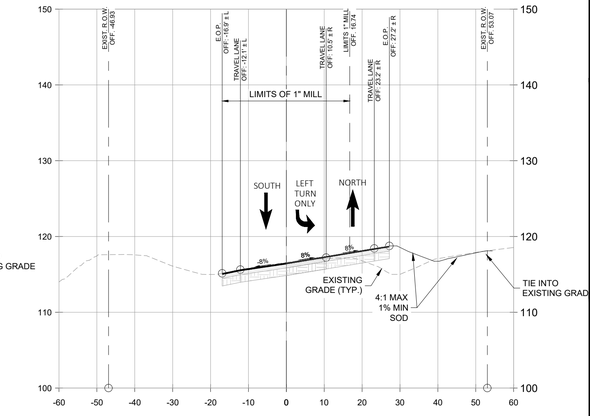

STA: 109+00.00
SCALE: H = 40, V = 20

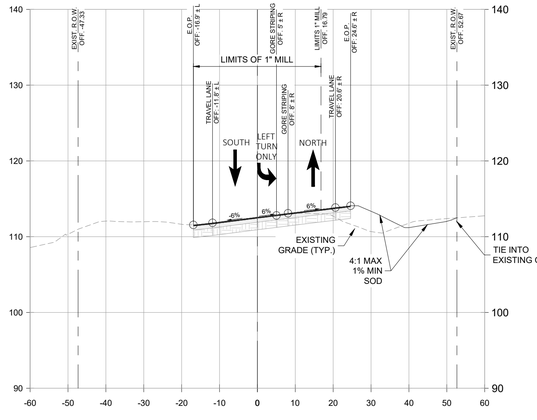

STA: 110+00.00
SCALE: H = 40, V = 20

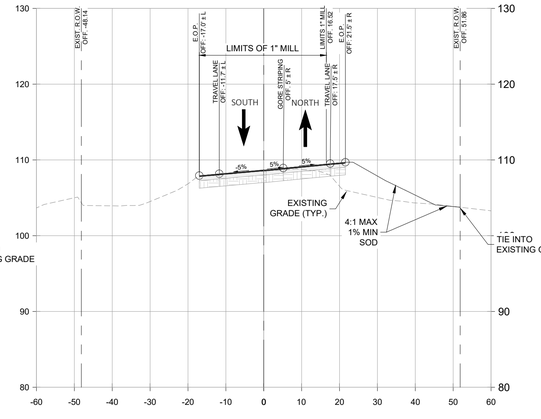

STA: 111+00.00
SCALE: H = 40, V = 20

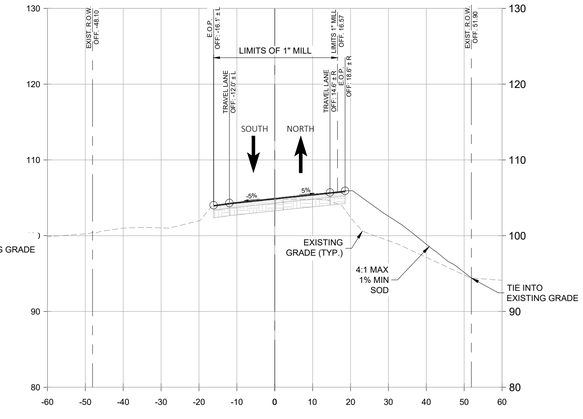

MADDEN
MOORHEAD & STOKES, LLC
CIVIL ENGINEERS
431 E. Horatio Avenue
Suite 260
Maitland, Florida 32751
(407) 629-8330
CA# 0007723

OFFSITE CROSS SECTIONS

FOR

LAKE HILLS SHOPPING CENTER

TOWN OF HOWEY IN THE HILLS FLORIDA

WINDCREST DEVELOPMENT GROUP, INC.
605 E. ROBINSON ST. SUITE 340
ORLANDO, FL 32801
407-219-3540

	DATE	REVISIONS
1		
2		
3		
4		
5		
6		
7		
8		
9		
10		
11		

BENJAMIN S. BECKHAM
LICENSE
NO. 79452
STATE OF FLORIDA
PROFESSIONAL ENGINEER

This item has been digitally signed and sealed by Benjamin S. Beckham, PE on the date adjacent to the seal.

Printed copies of this document are not considered signed and sealed and the signature must be verified on any electronic copies.

ENGINEER OF RECORD

JOB #	22041
DATE:	08/06/24
DATUM:	NAVD 88
DESIGNED BY:	KGS
DRAWN BY:	JAS
APPROVED BY:	BSB

C712

THESE DOCUMENTS AND THEIR CONTENTS ARE THE PROPERTY OF MADDEN, MOORHEAD & STOKES, LLC AND ARE NOT TO BE USED IN WHOLE OR IN PART FOR ANY PROJECT OTHER THAN THE ONE FOR WHICH THEY WERE PREPARED. THEY ARE NOT TO BE REPRODUCED, CHANGED OR COPIED IN ANY FORM OR MANNER WHATSOEVER, NOR ARE THEY TO BE ASSIGNED TO ANY THIRD PARTY, WITHOUT FIRST OBTAINING THE EXPRESS WRITTEN PERMISSION AND ADAPTATION OF MADDEN, MOORHEAD & STOKES, LLC.

H:\Data\22MMS\01-Lake Hams Public\Eng\Final\22041-CIT1-OFFSITE DRAINAGE AND GRADING.dwg January 15, 2025 2:35 PM

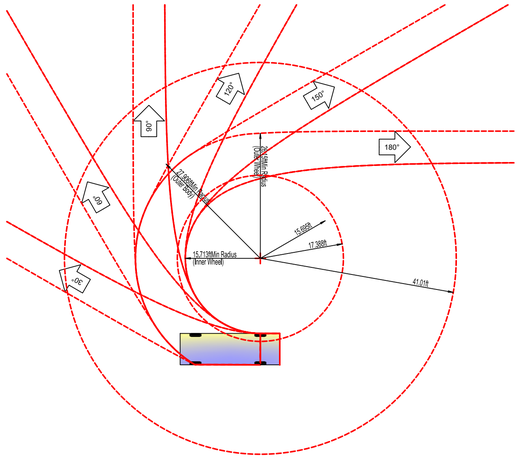

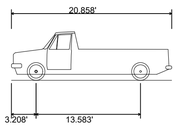

F-150 SUPERCAB 4X2 STYLESIDE 8' BOX
OVERALL LENGTH: 20.858'
TRACK WIDTH: 6.575'
LOCK-TO-LOCK TIME: 4.00 SEC
CURB TO CURB TURNING RADIUS: 26.150'

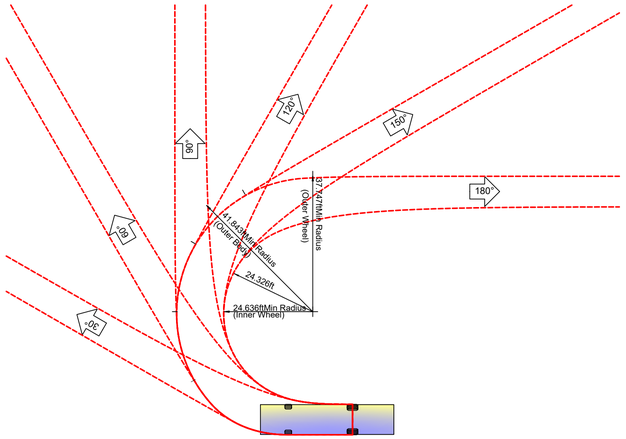

P75 AERIAL LADDER TRUCK TURNING TEMPLATE
N.T.S.

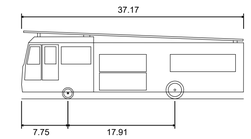

HP75 AERIAL LADDER TRUCK

OVERALL LENGTH: 37.17'
OVERALL WIDTH: 8.33'
TRACK WIDTH: 8.50'
LOCK-TO-LOCK TIME: 6.00S
MAX STEERING ANGLE (VIRTUAL): 31.80°

P75 AERIAL LADDER TRUCK VEHICLE PROFILE
N.T.S.

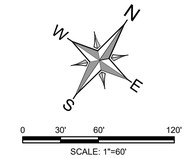

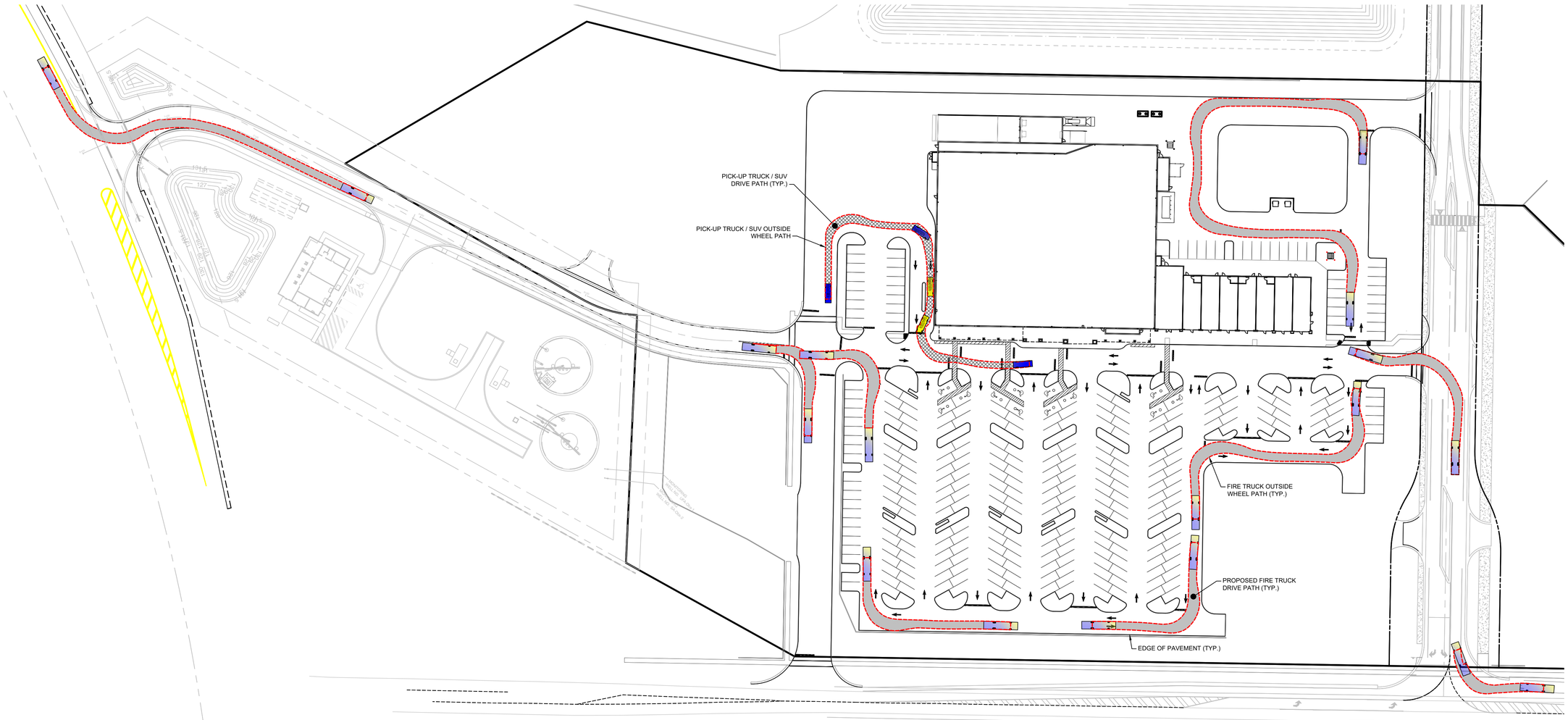

MADDEN
MOORHEAD & STOKES, LLC
CIVIL ENGINEERS
431 E. Horatio Avenue
Suite 260
Maitland, Florida 32751
(407) 629-8330
CA# 0007723

VEHICULAR CIRCULATION PLAN
FOR
LAKE HILLS SHOPPING CENTER
TOWN OF HOWEY IN THE HILLS FLORIDA

WINDCREST DEVELOPMENT GROUP, INC.
605 E. ROBINSON ST. SUITE 340
ORLANDO, FL 32801
407-219-3540

	DATE	REVISIONS
1		
2		
3		
4		
5		
6		
7		
8		
9		
10		
11		

BENJAMIN S. BECKHAM
LICENSE
NO. 79452
STATE OF FLORIDA
PROFESSIONAL ENGINEER

This item has been digitally signed and sealed by Benjamin S. Beckham, PE on the date adjacent to the seal.

Printed copies of this document are not considered signed and sealed and the signature must be verified on any electronic copies.

ENGINEER OF RECORD

JOB #	22041
DATE:	08/06/24
DATUM:	NAVD 88
DESIGNED BY:	KGS
DRAWN BY:	JAS
APPROVED BY:	BSB

C800

THESE DOCUMENTS AND THEIR CONTENTS ARE THE PROPERTY OF MADDEN, MOORHEAD & STOKES, LLC AND ARE ISSUED ONLY FOR THE SPECIFIC PROJECT NOTED ON THESE DRAWINGS. ANY REPRODUCTIONS, REVISIONS OR MODIFICATIONS OF THESE DOCUMENTS WITHOUT THE EXPRESSED WRITTEN CONSENT OF MADDEN, MOORHEAD & STOKES, LLC, IS PROHIBITED BY LAW.

H:\Data\22\MMS0410-Lake Harris Public\Eng\Final\22041-C800-VEHICLE CIRCULATION PLAN.dwg January 10, 2025 2:36 PM

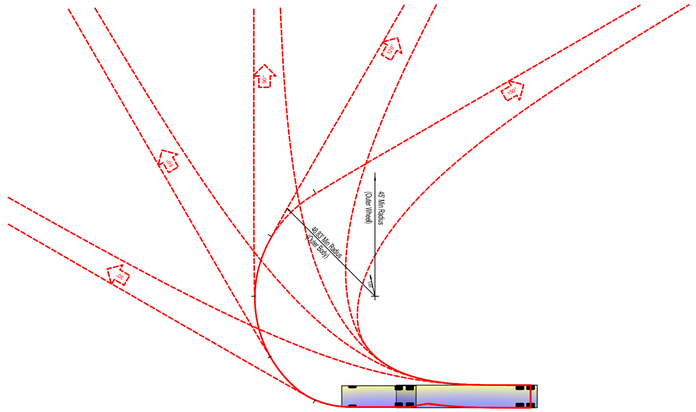

WB-67 - INTERSTATE SEMI-TRAILER TURNING TEMPLATE

N.T.S.

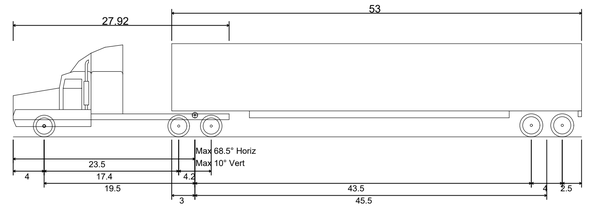

WB-67 - INTERSTATE SEMI-TRAILER

OVERALL LENGTH 73.50'
MAX TRACK WIDTH 8.50'
LOCK-TO-LOCK TIME: 6 sec
CURB TO CURB TURNING RADIUS: 45.00'

WB-67 - INTERSTATE SEMI-TRAILER VEHICLE PROFILE

N.T.S.

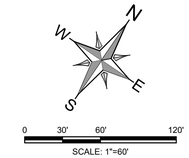

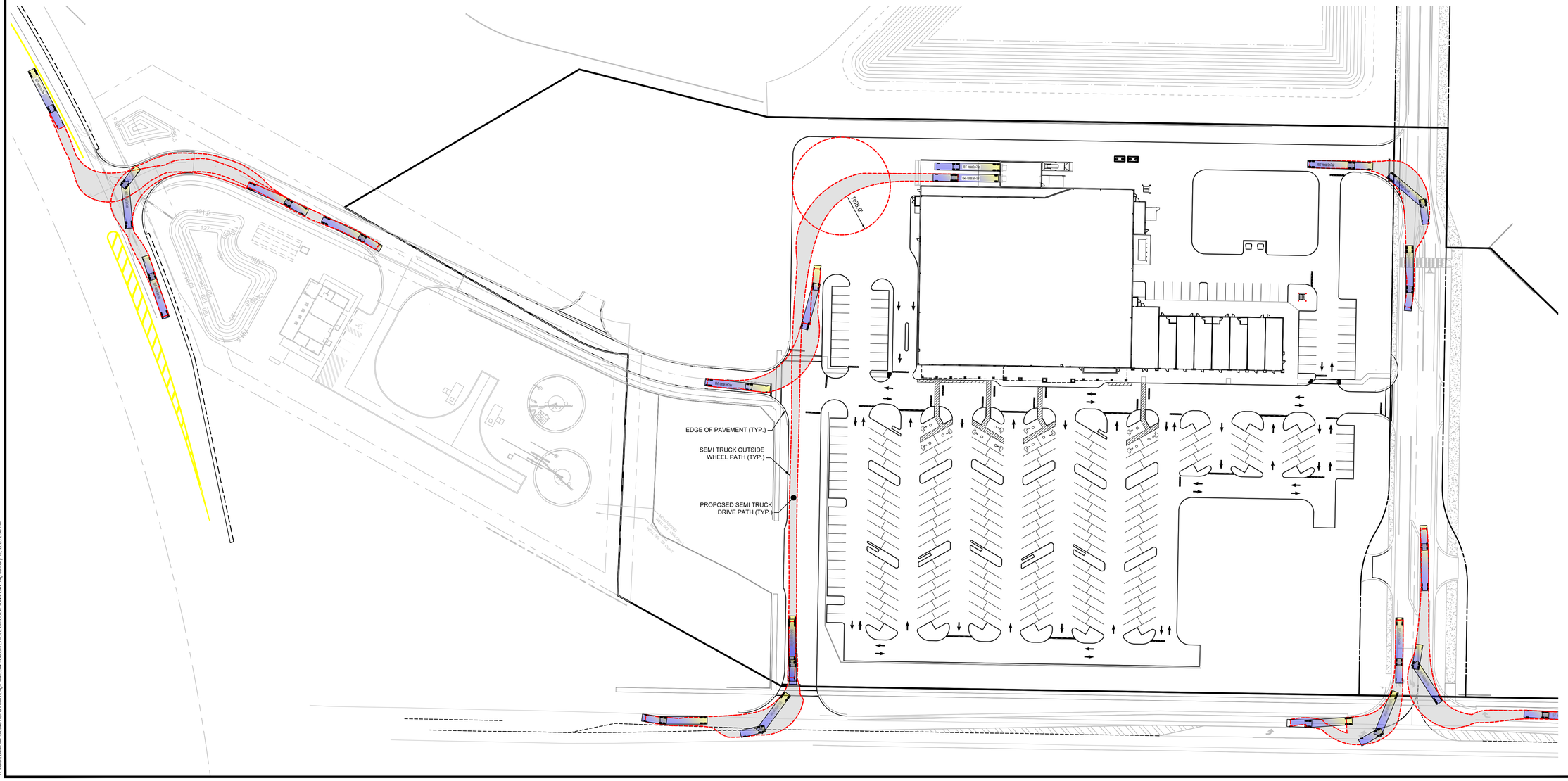

MADDEN
MOORHEAD & STOKES, LLC
CIVIL ENGINEERS
431 E. Horatio Avenue
Suite 260
Maitland, Florida 32751
(407) 629-8330
CA# 0007723

VEHICULAR CIRCULATION PLAN

FOR

LAKE HILLS SHOPPING CENTER

TOWN OF HOWEY IN THE HILLS FLORIDA

WINDCREST DEVELOPMENT GROUP, INC.
605 E. ROBINSON ST. SUITE 340
ORLANDO, FL 32801
407-219-3540

	DATE	REVISIONS
1		
2		
3		
4		
5		
6		
7		
8		
9		
10		
11		

BENJAMIN S. BECKHAM
LICENSE
NO. 79452
STATE OF FLORIDA
PROFESSIONAL ENGINEER

This item has been digitally signed and sealed by Benjamin S. Beckham, PE on the date adjacent to the seal.

Printed copies of this document are not considered signed and sealed and the signature must be verified on any electronic copies.

ENGINEER OF RECORD

JOB #	22041
DATE:	08/06/24
DATUM:	NAVD 88
DESIGNED BY:	KGS
DRAWN BY:	JAS
APPROVED BY:	BSB

C801

H:\Data\22MMS0410-Lake Harris Public\Eng\Final\22041-C800-VEHICLE CIRCULATION PLAN.dwg January 10, 2025 2:36 PM

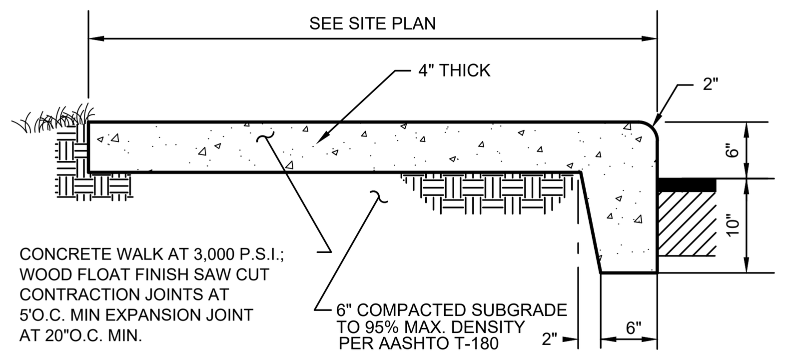

904 CONC WALK & CURB
N.T.S.

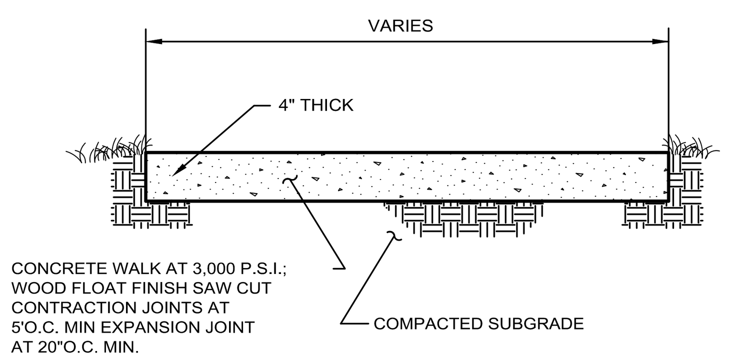

907 CONCRETE WALK
N.T.S.

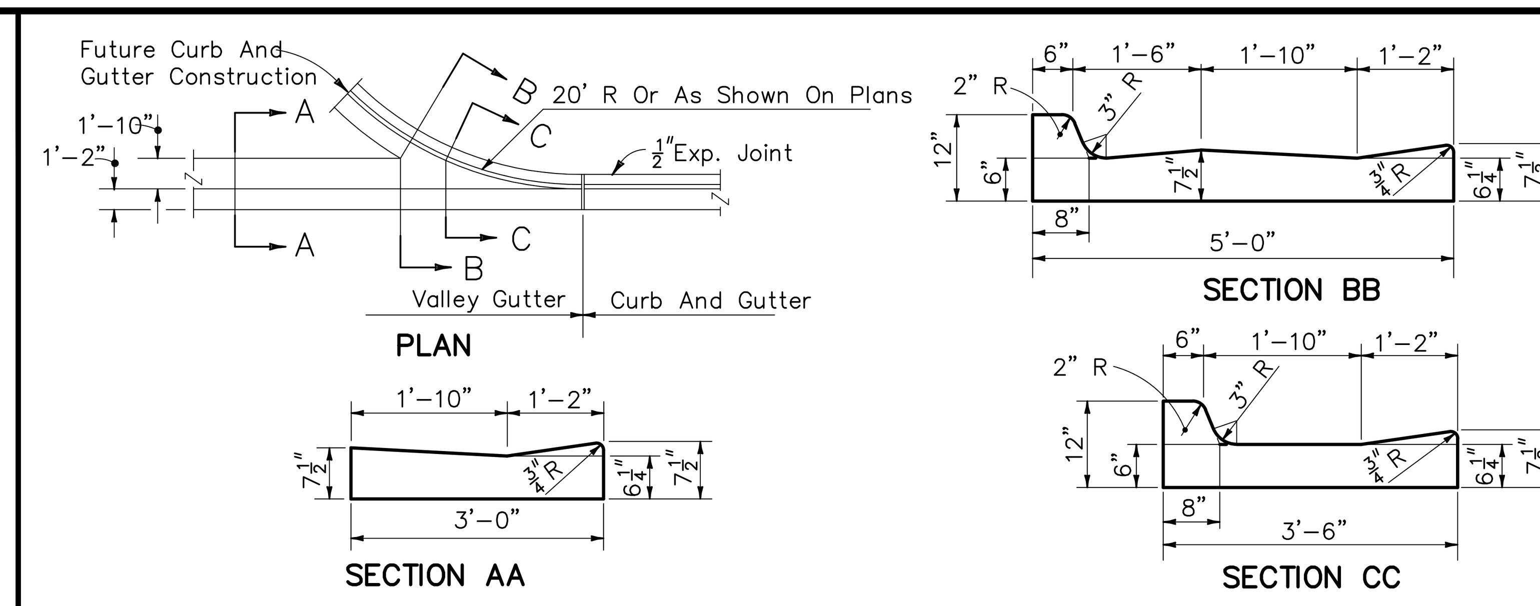

300V VALLEY GUTTER DETAIL
N.T.S.

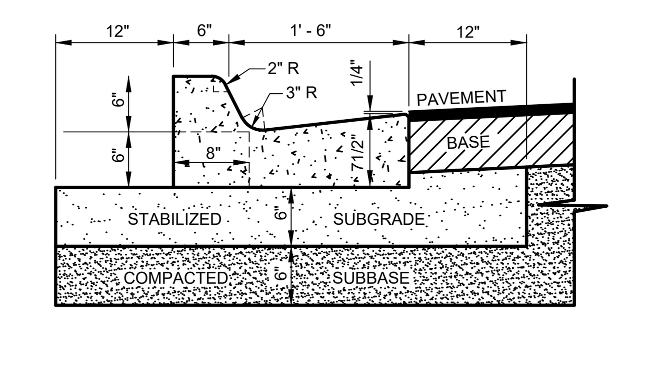

300F STANDARD CURB AND GUTTER
N.T.S.

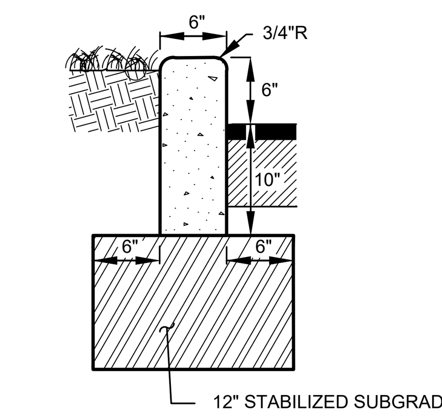

914 VERTICAL CURB DETAIL

PAVEMENT SPECIFICATIONS

LIGHT DUTY

(1) 2" OF FDOT SUPERPAVE SP-9.5 FINE MIX FOR LIGHT-DUTY AREAS . THE ASPHALT CONCRETE SHOULD BE PLACED WITHIN THE ALLOWABLE LIFT THICKNESSES FOR FINE TYPE SP MIXES PER THE LATEST EDITION OF FDOT, STANDARD SPECIFICATIONS FOR ROAD AND BRIDGE CONSTRUCTION.

(2) 6" OF LIME ROCK BASE. THE BASE COURSE SHOULD BE COMPACTED TO A MINIMUM DENSITY OF 98 PERCENT OF THE MODIFIED PROCTOR MAXIMUM DRY DENSITY AND EXHIBIT A MINIMUM LBR OF 100. THE LIMEROCK MATERIAL SHOULD COMPLY WITH THE LATEST EDITION OF THE FLORIDA DEPARTMENT OF TRANSPORTATION (FDOT) ROAD AND BRIDGE CONSTRUCTION SPECIFICATIONS.

OR

6" OF RECYCLED CONCRETE AGGREGATE (RCA) BASE.THE BASE COURSE MATERIAL SHOULD BE SOURCED FROM AN FDOT APPROVED SUPPLIER. THE BASE SHOULD BE COMPACTED TO A MINIMUM DENSITY OF 98 PERCENT OF THE MODIFIED PROCTOR MAXIMUM DRY DENSITY AND EXHIBIT A MINIMUM LBR OF 150. THE BASE MATERIAL SHOULD COMPLY WITH THE CRITERIA LISTED IN THE LATEST EDITION OF THE FDOT ROAD AND BRIDGE CONSTRUCTION SPECIFICATIONS.

(3) 12" OF STABILIZED SUBGRADE MATERIALS IMMEDIATELY BENEATH THE BASE COURSE EXHIBIT A MINIMUM LIMEROCK BEARING RATIO (LBR) OF 40 AS SPECIFIED BY FLORIDA DEPARTMENT OF TRANSPORTATION (FDOT). THE STABILIZED SUBGRADE SHOULD BE COMPACTED TO AT LEAST 98 PERCENT OF THE MODIFIED PROCTOR MAXIMUM DRY DENSITY (ASTM D 1557) VALUE.

NOTE:
1. ROADS SHALL BE CONSTRUCTED PER TOWN OF HOWEY IN THE HILLS STANDARDS AND SPECIFICATIONS.

HEAVY DUTY

(4) 2.5" OF FDOT SUPERPAVE SP-12.5 TOPPED WITH SP-9.5 FINE MIX FOR HEAVY DUTY AREAS. THE ASPHALT CONCRETE SHOULD BE PLACED WITHIN THE ALLOWABLE LIFT THICKNESSES FOR FINE TYPE SP MIXES PER THE LATEST EDITION OF FDOT, STANDARD SPECIFICATIONS FOR ROAD AND BRIDGE CONSTRUCTION.

(5) 8" OF LIME ROCK BASE. THE BASE COURSE SHOULD BE COMPACTED TO A MINIMUM DENSITY OF 98 PERCENT OF THE MODIFIED PROCTOR MAXIMUM DRY DENSITY AND EXHIBIT A MINIMUM LBR OF 100. THE LIMEROCK MATERIAL SHOULD COMPLY WITH THE LATEST EDITION OF THE FLORIDA DEPARTMENT OF TRANSPORTATION (FDOT) ROAD AND BRIDGE CONSTRUCTION SPECIFICATIONS.

OR

8" RECYCLED CONCRETE AGGREGATE (RCA) BASE.THE BASE COURSE MATERIAL SHOULD BE SOURCED FROM AN FDOT APPROVED SUPPLIER. THE BASE SHOULD BE COMPACTED TO A MINIMUM DENSITY OF 98 PERCENT OF THE MODIFIED PROCTOR MAXIMUM DRY DENSITY AND EXHIBIT A MINIMUM LBR OF 150. THE BASE MATERIAL SHOULD COMPLY WITH THE CRITERIA LISTED IN THE LATEST EDITION OF THE FDOT ROAD AND BRIDGE CONSTRUCTION SPECIFICATIONS.

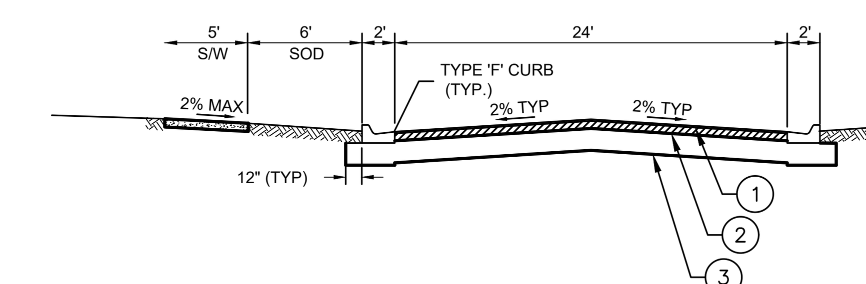

A 50' RIGHT OF WAY SECTION (TYP.)
NOT TO SCALE

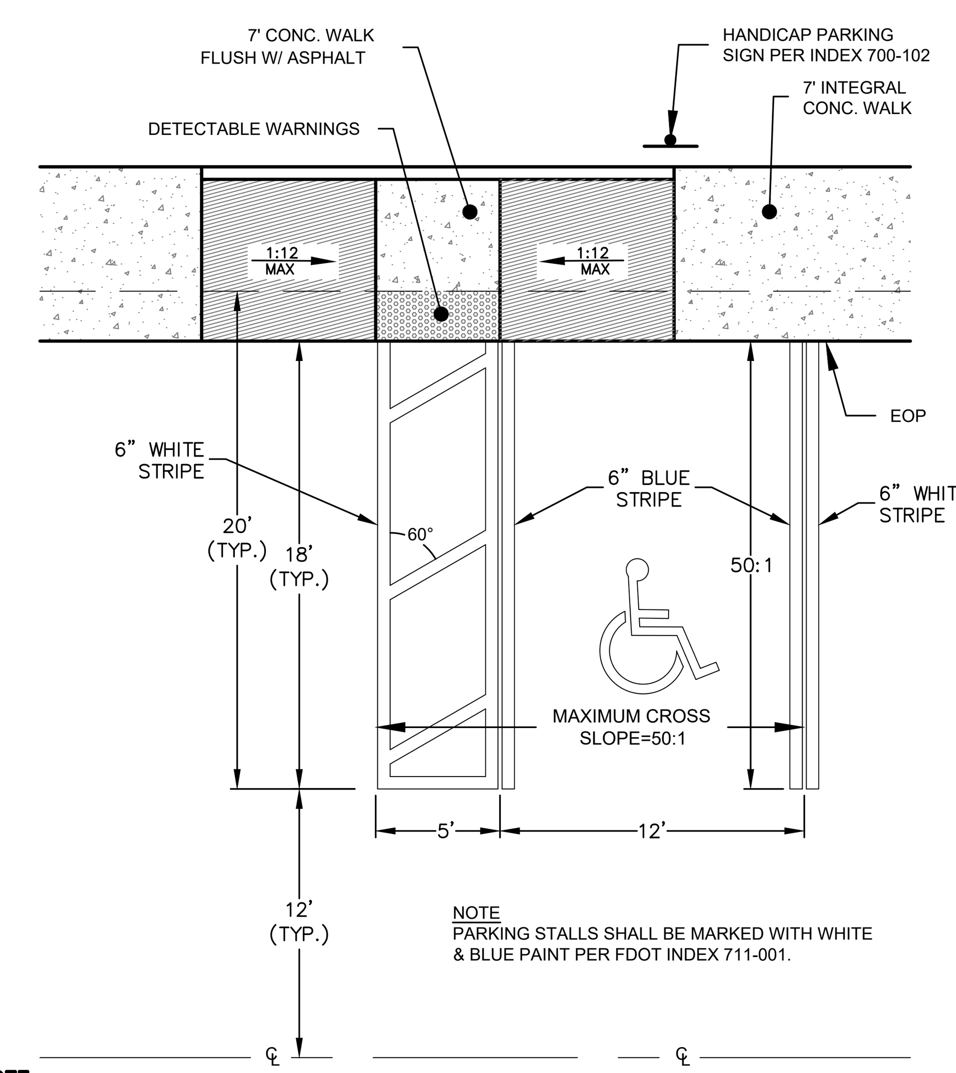

NOTE
PARKING STALLS SHALL BE MARKED WITH WHITE & BLUE PAINT PER FDOT INDEX 711-001.

NOTE:
1. ACCESSIBILITY:
   A. IN ACCORDANCE WITH THE FLORIDA ACCESSIBILITY CODE FOR BUILDING CONSTRUCTION, 4.1.3 SECTION (1). DATED OCT. 1997 AT LEAST ONE ACCESSIBLE ROUTE COMPLYING WITH 4.3 SHALL CONNECT ACCESSIBLE BUILDING OR FACILITY ENTRANCES WITH ALL ACCESSIBLE SPACES AND ELEMENTS WITHIN THE BUILDING OR FACILITY. DOORS ACCESSING THE BUILDING MUST BE DEPICTED ON SITE PLAN. RAMP DETAILS WITH SLOPE INFORMATION SHALL BE DEPICTED ON SITE PLAN.
   B. THE LOCATION OF HANDICAPPED PARKING STALLS, LOADING ZONES, SIDEWALKS AND RAMPS ON SITE SHALL MEET CHAPTER 316.1955 OF THE FLORIDA ACCESSIBILITY CODE: RAMPS SHALL NOT EXCEED 12:1 SLOPES PARKING SPACE AND AISLE SHALL NOT EXCEED 50:1 CROSS-SLOPE. (TLO 11-16-96) 12-11-96

NOTE: (HANDICAP SIGN ONLY)
1. ALL LETTERS SHALL BE BLACK AND SHALL CONFORM TO FDOT "DESIGN STANDARDS", CURRENT EDITION.
2. TOP PORTION OF SIGN SHALL HAVE REFLECTORIZED (ENGINEERING GRADE) BLUE BACKGROUND WITH WHITE REFLECTORIZED LEGEND AND BORDER.
3. BOTTOM PORTION OF SIGN SHALL HAVE A REFLECTORIZED (ENGINEERING GRADE) WHITE BACKGROUND WITH BLACK BORDER.
4. ONE SIGN REQUIRED FOR EACH PARKING SPACE.
5. BOTTOM OF SIGN SHALL BE 7' ABOVE GROUND IN ACCORDANCE WITH FDOT "DESIGN STANDARDS", CURRENT EDITION.

818 HANDICAP RAMP AND PARKING STALL DETAIL
N.T.S.

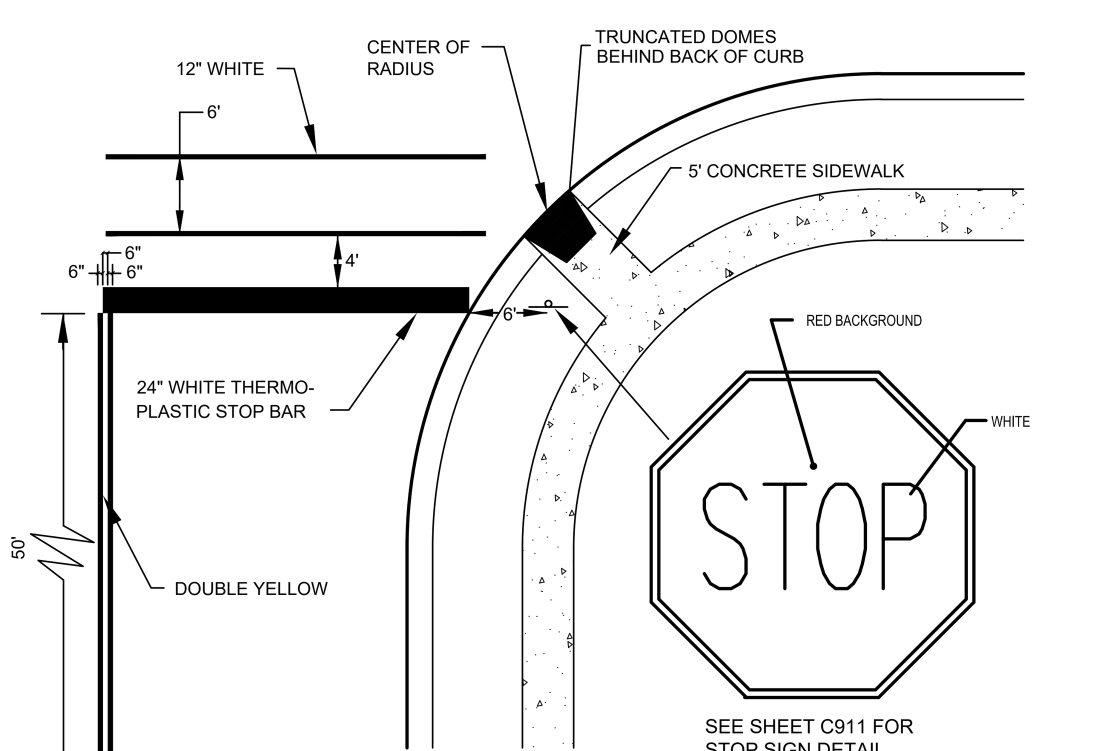

NOTE:
RAMPS RUNS SHALL HAVE A TACTILE SURFACE. RAMP LANDINGS ADJOINING VEHICULAR WAYS SHALL HAVE A TACTILE SURFACE 36" WIDE BORDERING THE VEHICULAR WAY. TACTILE SURFACES SHALL BE CONSTRUCTED AS SHOWN ON DETAIL TD ON SHEET DT-3.

917 STOP SIGN, BAR AND CROSSWALK
N.T.S.

All Letters
1" Series C
1" Spacing Between Lines of Text

FTP-20-06
1' X 1'-6"
2" Radii 3/8" Border
1" Series C Legend
Color
Background
Legend and Border

Top	*Bottom*
Blue	*White*
White	*Black*

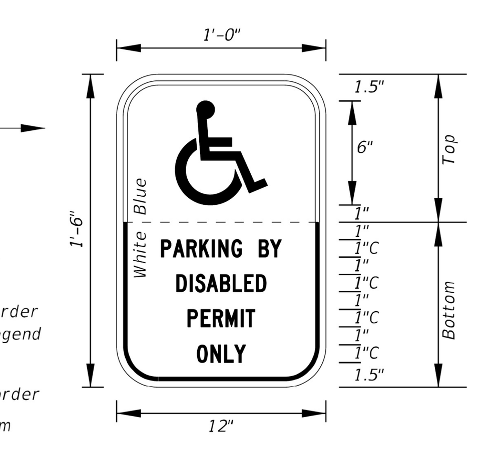

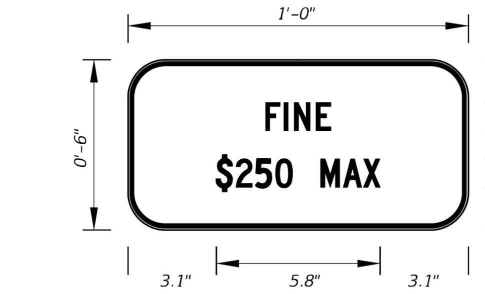

FTP-22-06
1' X 6"
1" Radii 3/8" Border
1" Series C Legend
White Background
Black Legend and Border

Supplemental Panel for the FTP-20-06 and FTP-21-06 signs

FDOT INDEX 700–102

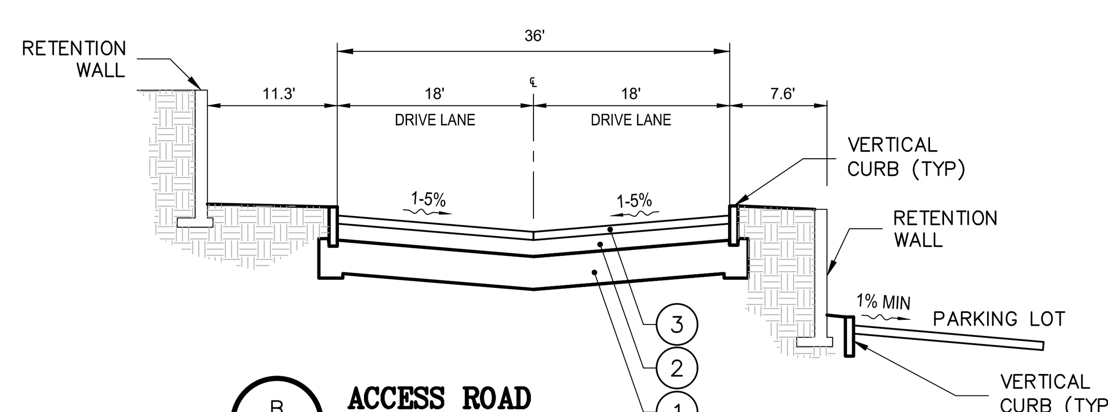

B ACCESS ROAD
N.T.S.

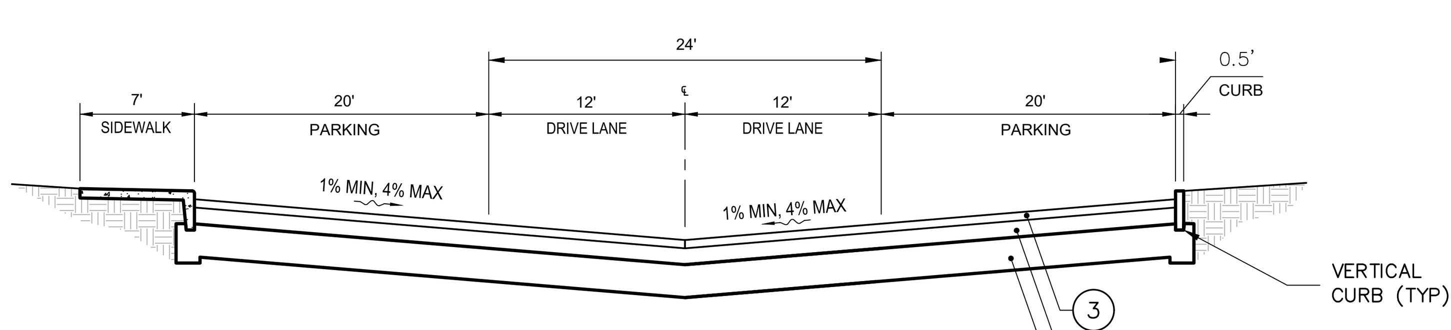

C TYPICAL PARKING LOT SECTION
N.T.S.

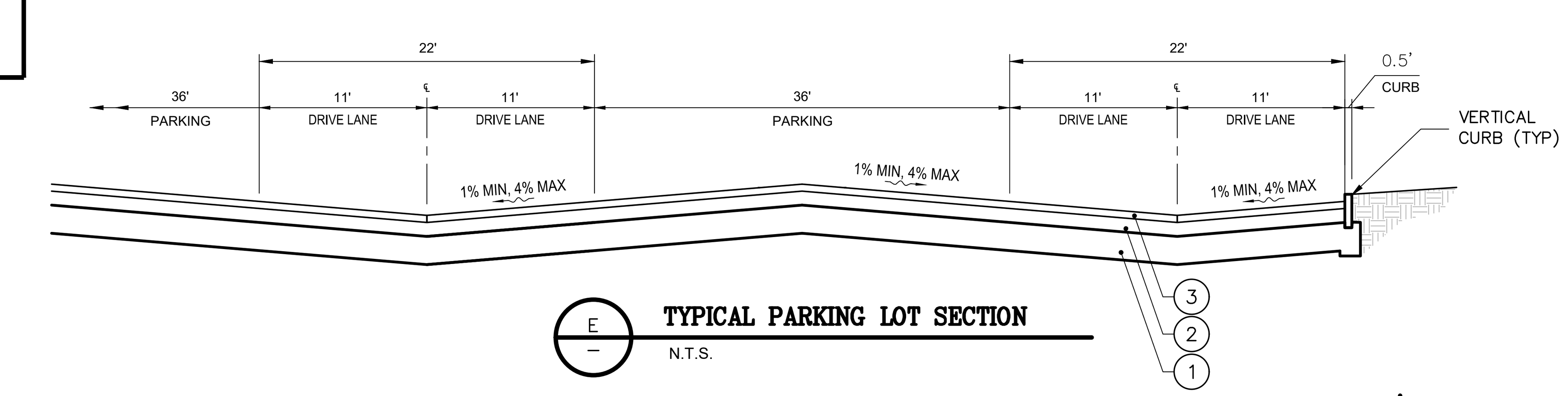

E TYPICAL PARKING LOT SECTION
N.T.S.

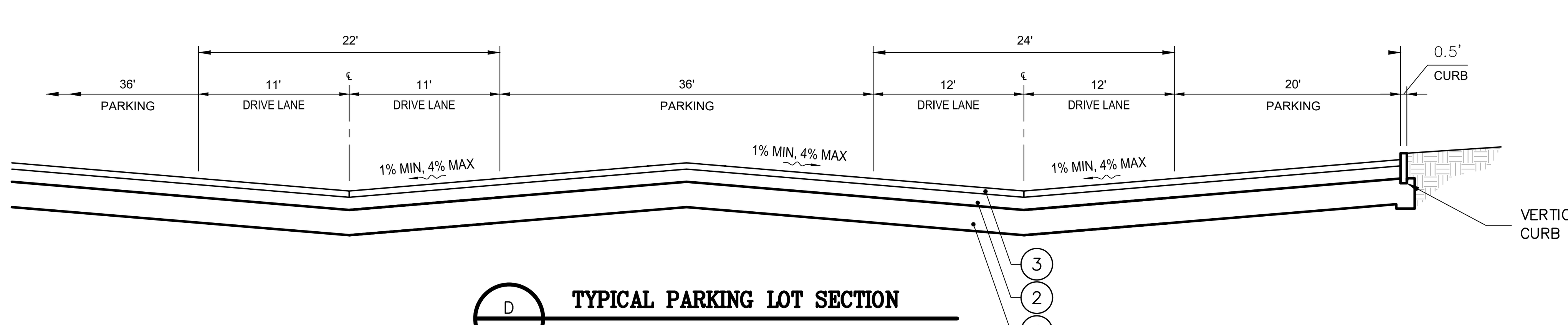

D TYPICAL PARKING LOT SECTION
N.T.S.

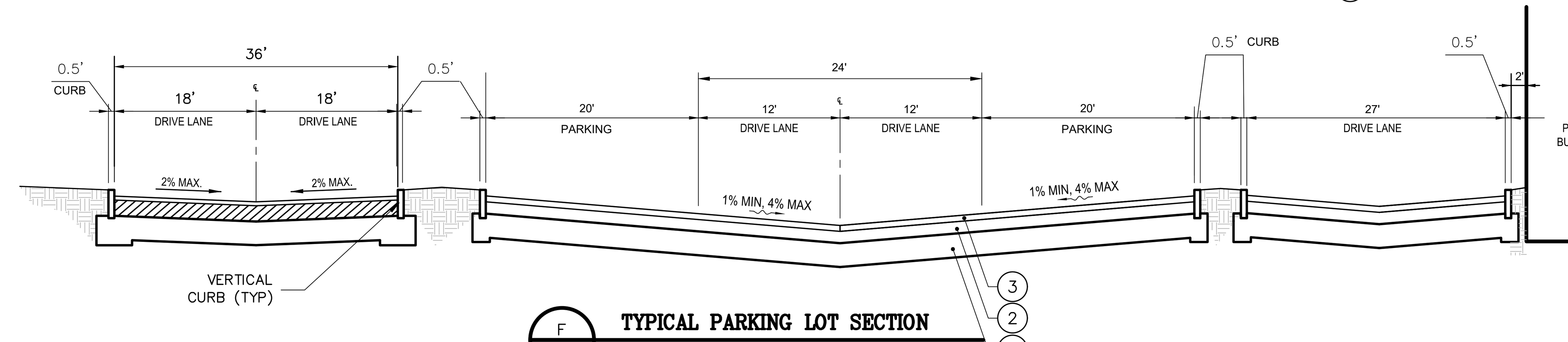

F TYPICAL PARKING LOT SECTION
N.T.S.

MADDEN
MOORHEAD & STOKES, LLC
CIVIL ENGINEERS
431 E. Horatio Avenue
Suite 260
Maitland, Florida 32751
(407) 629-8330
CA# 0007723

CONSTRUCTION DETAILS
FOR
LAKE HILLS SHOPPING CENTER
TOWN OF HOWEY IN THE HILLS FLORIDA

WINDCREST DEVELOPMENT GROUP, INC.
605 E. ROBINSON ST. SUITE 340
ORLANDO, FL 32801
407-219-3540

	DATE	REVISIONS
1		
2		
3		
4		
5		
6		
7		
8		
9		
10		
11		

BENJAMIN S. BECKHAM LICENSE NO. 79452 STATE OF FLORIDA PROFESSIONAL ENGINEER

This item has been digitally signed and sealed by Benjamin S. Beckham, PE on the date adjacent to the seal.

Printed copies of this document are not considered signed and sealed and the signature must be verified on any electronic copies.

ENGINEER OF RECORD

JOB #	22041
DATE:	08/06/24
DATUM:	NAVD 88
DESIGNED BY:	KGS
DRAWN BY:	JAS
APPROVED BY:	BSB

C900

THESE DOCUMENTS AND THEIR CONTENTS ARE THE PROPERTY OF MADDEN, MOORHEAD & STOKES, LLC. AND ARE ISSUED ONLY FOR THE SPECIFIC PROJECT NOTED ON THESE DRAWINGS. ANY REPRODUCTIONS, REVISIONS OR MODIFICATIONS OF THESE DOCUMENTS WITHOUT THE EXPRESSED WRITTEN CONSENT OF MADDEN, MOORHEAD & STOKES, LLC. IS PROHIBITED BY LAW.

H:\Data\22\MMS0410-Lake Harris Publix\Eng\Final\22041-C900-CONSTRUTION DETAILS.dwg January 10, 2025 2:36 PM

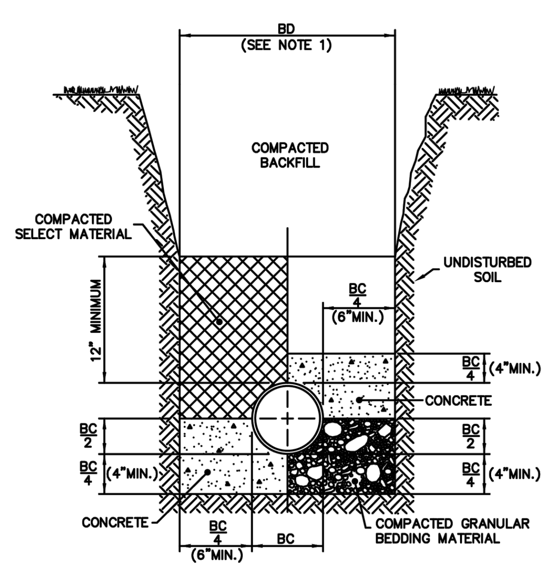

CLASS "A" BEDDING
SPECIAL CONDITIONS

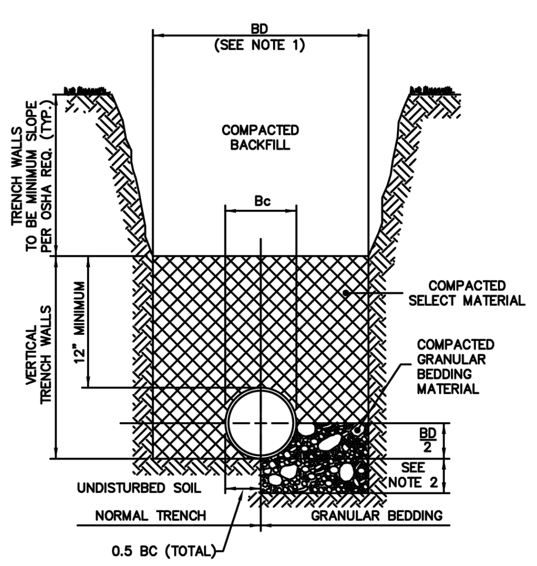

CLASS "B" BEDDING
NORMAL CONDITIONS

NOTES: FOR BEDDING AND TRENCHING

1. DIMENSION BC = PIPE O.D.
   DIMENSION BD = TRENCH WIDTH AT TOP OF PIPE
   MAXIMUM BD = BC + 30"
   MINIMUM BD = MAXIMUM DIMENSION OF BELL + 8" (UNSHEETED TRENCH)
2. DEPTH FOR REMOVAL FOR UNSUITABLE MATERIAL SHALL BE AS REQUIRED TO REACH SUITABLE FOUNDATION. FOR ROCK OR OTHER NON-CUSHIONING MATERIAL, DEPTH SHALL BE 6" BELOW BOTTOM OF UTILITY.
3. ALL BACKFILL AND SELECT MATERIAL UNDER ALL ROADWAYS, DRIVES (INCLUDING DIRT DRIVES), AND PARKING AREAS SHALL BE COMPACTED TO 98% OF THE MODIFIED PROCTOR MAXIMUM DRY DENSITY. (AASHTO T-180). BACKFILL AND SELECT MATERIAL UNDER ALL OTHER AREAS SHALL BE COMPACTED AS FOLLOWS: FROM BOTTOM OF TRENCH TO 12" ABOVE TOP OF PIPE – 95% OF MODIFIED PROCTOR MAXIMUM DRY DENSITY (AASHTO T-180). FROM 12" ABOVE TOP OF PIPE TO TOP OF BACKFILL – 90% OF MODIFIED PROCTOR MAXIMUM DRY DENSITY (AASHTO T-180)

TRENCHING AND BEDDING
NOT TO SCALE

Howey–in–the–Hills Standard Details | DATE: FEB 2022 | DETAIL PW-2

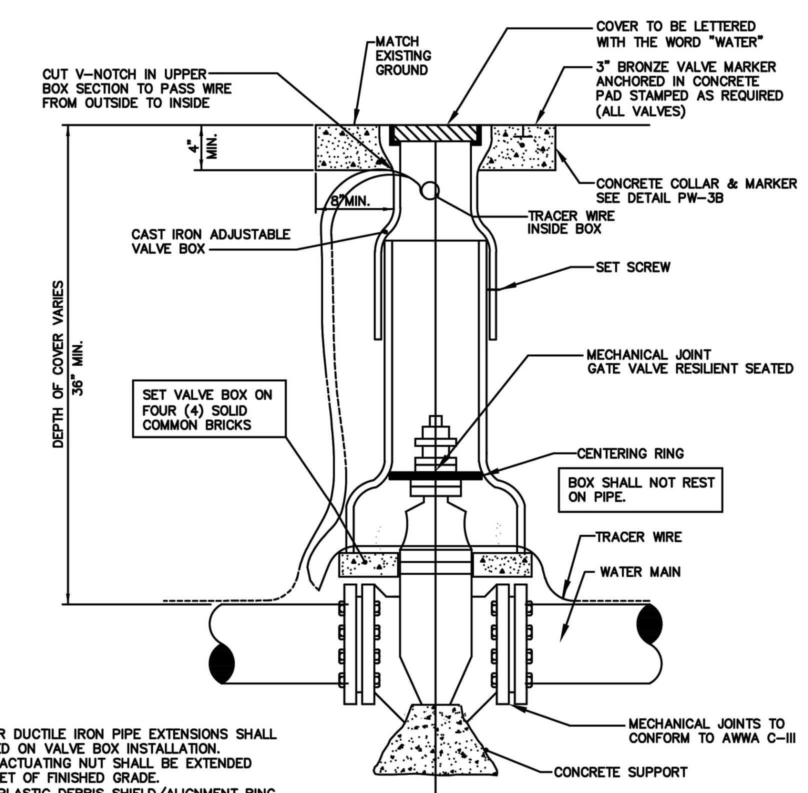

NOTES

1. PVC PIPE OR DUCTILE IRON PIPE EXTENSIONS SHALL NOT BE USED ON VALVE BOX INSTALLATION.
2. THE VALVE ACTUATING NUT SHALL BE EXTENDED WITHIN 2 FEET OF FINISHED GRADE.
3. PROVIDE A PLASTIC DEBRIS SHIELD/ALIGNMENT RING WHICH INSTALLS BELOW THE VALVE ACTUATING NUT. THIS SHIELD SHALL CENTER THE RISER PIPE BOX OVER THE ACTUATING NUT AND MINIMIZE INFILTRATION.
4. FOR NEW CONSTRUCTION, THE VALVE BOX SHALL BE ADJUSTED TO MIDRANGE TO ALLOW FOR FUTURE BOX ADJUSTMENTS.
5. VALVE BOX SHALL BE A TWO PIECE SCREW TYPE.

GATE VALVE AND BOX
NOT TO SCALE

Howey–in–the–Hills Standard Details | DATE: FEB 2022 | DETAIL PW-3A

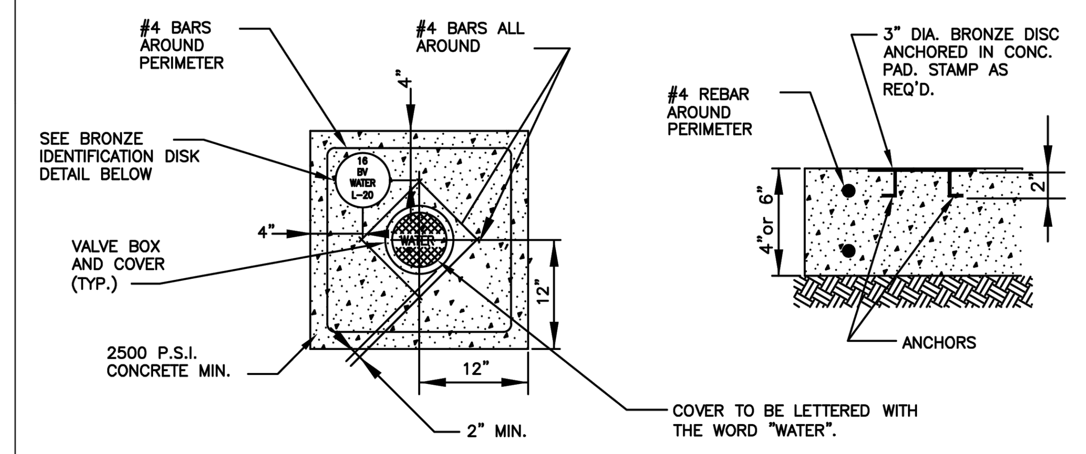

NOTE:

1. BRONZE IDENTIFICATION DISC SHALL BE REQUIRED FOR ALL VALVES.
2. 6" THICK CONCRETE PAD IN ROADWAY OR PAVED AREAS, 4" THICK CONCRETE PAD IN OTHER AREAS.

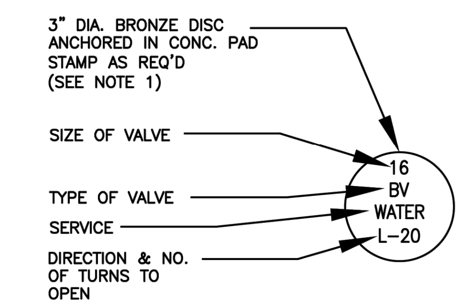

BRONZE IDENTIFICATION DISC DETAIL

VALVE COLLAR
NOT TO SCALE

Howey–in–the–Hills Standard Details | DATE: FEB 2022 | DETAIL PW-3B

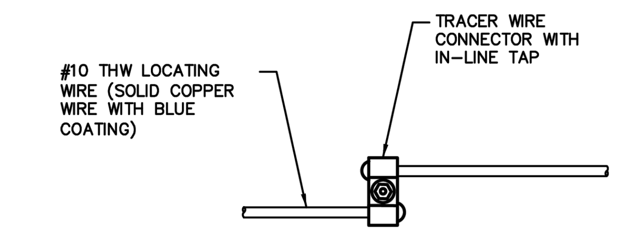

NOTES:

1. TRACER WIRE CONNECTOR SHALL BE DIRECT BURY, SELF-STRIPPING, LOCKING.
2. AFTER INSTALLATION OF THE LOCATING WIRE THE SYSTEM SHALL BE SUBJECTED TO TESTING, IN THE PRESENCE OF CITY UTILITY DIRECTOR OR HIS DESIGNEE PRIOR TO BACKFILL, IN ORDER TO CONFIRM THAT THE SYSTEM IS FUNCTIONAL.

LOCATING WIRE SPLICING
NOT TO SCALE

Howey–in–the–Hills Standard Details | DATE: FEB 2022 | DETAIL PW-5

TEMPORARY JUMPER CONNECTION NOTES

1. A TEMPORARY JUMPER CONNECTION IS REQUIRED AT ALL CONNECTIONS BETWEEN EXISTING ACTIVE WATER MAINS AND PROPOSED NEW WATER MAIN IMPROVEMENTS.
2. THE DETAILS TO BE USED FOR FILLING ANY WATER MAIN OF ANY SIZE FROM EXISTING ACTIVE WATER MAINS AND FOR FLUSHING OF NEW MAINS UP TO 8" DIAMETER (2.5 FPS MINIMUM VELOCITY) AND FOR PULLING BACTERIOLOGICAL SAMPLES FROM ANY NEW WATER MAIN OF ANY SIZE. THE JUMPER CONNECTION SHALL BE MAINTAINED UNTIL AFTER FILLING, FLUSHING, TESTING AND DISINFECTION OF THE NEW MAIN HAS BEEN SUCCESSFULLY COMPLETED AND CLEARANCE FOR USE FROM THE FLORIDA DEPARTMENT OF ENVIRONMENTAL PROTECTION (FDEP) AND OTHER PERTINENT AGENCIES HAS BEEN RECEIVED. THE JUMPER CONNECTION SHALL ALSO BE USED TO MAINTAIN A MINIMUM PRESSURE OF 20 PSI IN THE NEW MAINS ALL THE TIME AFTER DISINFECTION AND UNTIL THE FDEP CLEARANCE LETTER IS OBTAINED. ADEQUATE RESTRAINTS SHALL BE PROVIDED TEMPORARILY, AS REQUIRED. PIPE AND FITTINGS USED FOR CONNECTING THE NEW PIPE TO THE EXISTING PIPE SHALL BE DISINFECTED PRIOR TO INSTALLATION IN ACCORDANCE WITH AWWA C651, LATEST EDITION. THIS TAPPING SLEEVE AND THE EXTERIOR OF THE MAIN TO BE TAPPED SHALL BE DISINFECTED BY SPRAYING OR SWABBING PER SECTION II OF AWWA C561, LATEST EDITION.
3. FLUSHING OF 10" DIAMETER AND LARGE WATER MAINS MAY BE DONE THROUGH THE TIE-IN VALVE, IN THE PRESENCE OF THE UTILITY DIRECTOR OR HIS DESIGNEE. THE UTILITY DEPARTMENT WILL NOTIFIED IN WRITING 48 HOURS PRIOR TO THE FLUSHING OF SAID MAINS.

   THE FOLLOWING PROCEDURES SHALL BE FOLLOWED:

   A. THE TIE-IN VALVES SHALL BE OPERATED AND PRESSURE TESTED IN THE PRESENCE OF THE UTILITY COMPANY AND ENGINEER TO VERIFY WATER TIGHTNESS PRIOR TO THE TIE-IN. VALVES WHICH ARE NOT WATERTIGHT SHALL BE REPLACED OR A NEW VALVE INSTALLED IMMEDIATELY ADJACENT TO THE LEAKING VALVE.
   B. THE TEMPORARY JUMPER CONNECTION SHALL BE CONSTRUCTED AS DETAILED. THE JUMPER CONNECTION SHALL BE USED TO FILL THE NEW WATER MAIN AND FOR PROVIDING WATER FOR BACTERIOLOGICAL SAMPLING OF THE NEW MAIN AS REQUIRED BY THE FDEP PERMIT.
      – FLUSHING SHALL NOT BE ATTEMPTED DURING PEAK DEMAND HOURS OF THE EXISTING WATER MAIN.
      – ALL DOWNSTREAM VALVES IN THE NEW SYSTEM MUST BE OPEN PRIOR TO OPENING THE TIE-IN VALVE.
      – PROVIDE FOR AND MONITOR THE PRESSURE AT THE TIE-IN POINT, THE PRESSURE IN THE EXISTING MAIN MUST NOT DROP BELOW 35 psi.
      – TIE-IN VALVE SHALL BE OPENED A FEW TURNS ONLY, ENSURING A PRESSURE DROP ACROSS THE VALE IS ALWAYS GRATER THAN 10 psi.
   C. THE TIE-IN VALVE SHALL BE LOCKED CLOSED BY THE CITY UNTIL FLUSHING BEGINS.
   D. THE TIE-IN VALVE SHALL BE OPENED ONLY A FEW TURNS FOR FLUSHING OF THE NEW MAIN. THE PROCEDURE SHALL BE DIRECTED BY THE CITY AND OBSERVED BY THE ENGINEER.
   E. AFTER FLUSHING, THE TIE-IN VALVE SHALL BE CLOSED AND LOCKED IN THE CLOSED POSITION BY THE CITY.
4. THE CONTRACTOR SHALL PROVIDE DOCUMENTATION DEMONSTRATING THAT THE RPZ BACKFLOW PREVENTION DEVICE HAS BEEN TESTED WITHIN ONE YEAR AT THE TIME OF INSTALLATION AND IS IN GOOD WORKING ORDER AT THE TIME OF INSTALLATION. THE TEST SHALL BE PERFORMED BY A QUALIFIED BACKFLOW PREVENTION TECHNICIAN.
5. EXCEPT AS REQUIRED TO FLUSH LINES OF GREATER THAN 8" IN DIAMETER, THE TIE-IN VALVE SHALL REMAIN CLOSED AND SHALL BE LOCKED IN THE CLOSED POSITION BY THE CITY. THE TIE-IN VALVE SHALL REMAIN LOCKED CLOSED UNTIL THE NEW SYSTEM HAS BEEN CLEARED FOR USE BY FDEP AND ALL OTHER PERTINENT AGENCIES.
6. UPON RECEIPT OF CLEARANCE FOR USE FROM FDEP AND ALL OTHER PERTINENT AGENCIES, THE CONTRACTOR SHALL REMOVE THE JUMPER CONNECTION. THE CORPORATION STOPS ARE TO BE CLOSED AND PLUGGED WITH 2" BRASS PLUGS.
7. ALL INSTALLATION AND MAINTENANCE OF THE TEMPORARY JUMPER CONNECTION AND ASSOCIATED BACKFLOW PREVENTION DEVICE FITTINGS, VALVE, ETC., SHALL BE THE RESPONSIBILITY OF THE CONTRACTOR.

Howey–in–the–Hills Standard Details | DATE: FEB 2022 | DETAIL PW-6B

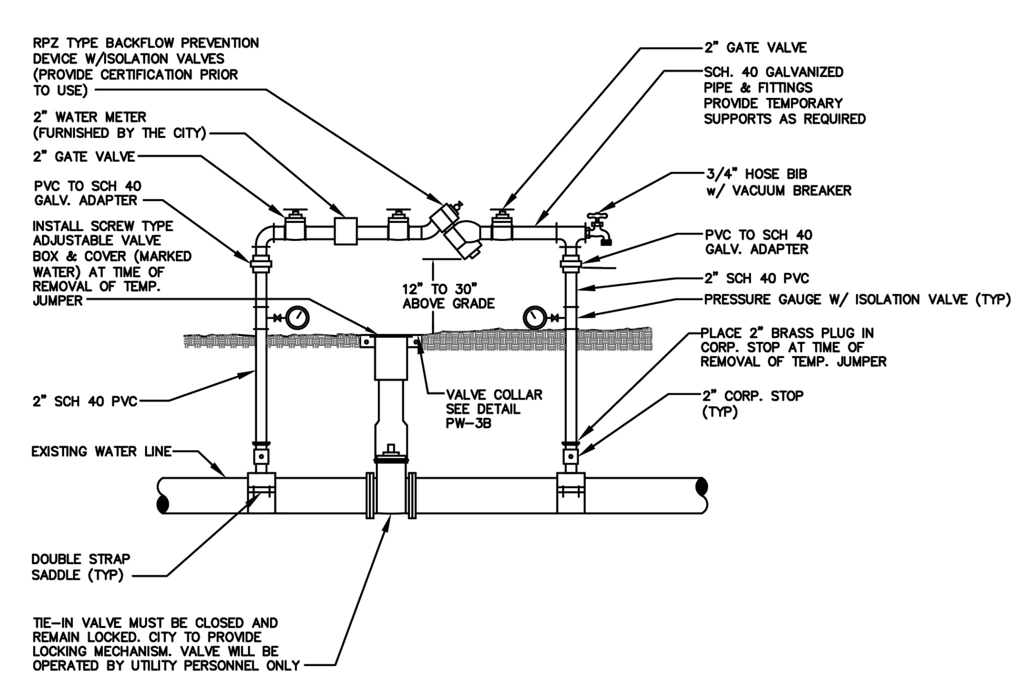

TEMPORARY JUMPER CONNECTION
NOT TO SCALE

NOTE: LOCATION TO BE DETERMINED AT TIME OF PRECONSTRUCTION CONFERENCE W/ CITY.

Howey–in–the–Hills Standard Details | DATE: FEB 2022 | DETAIL PW-6A

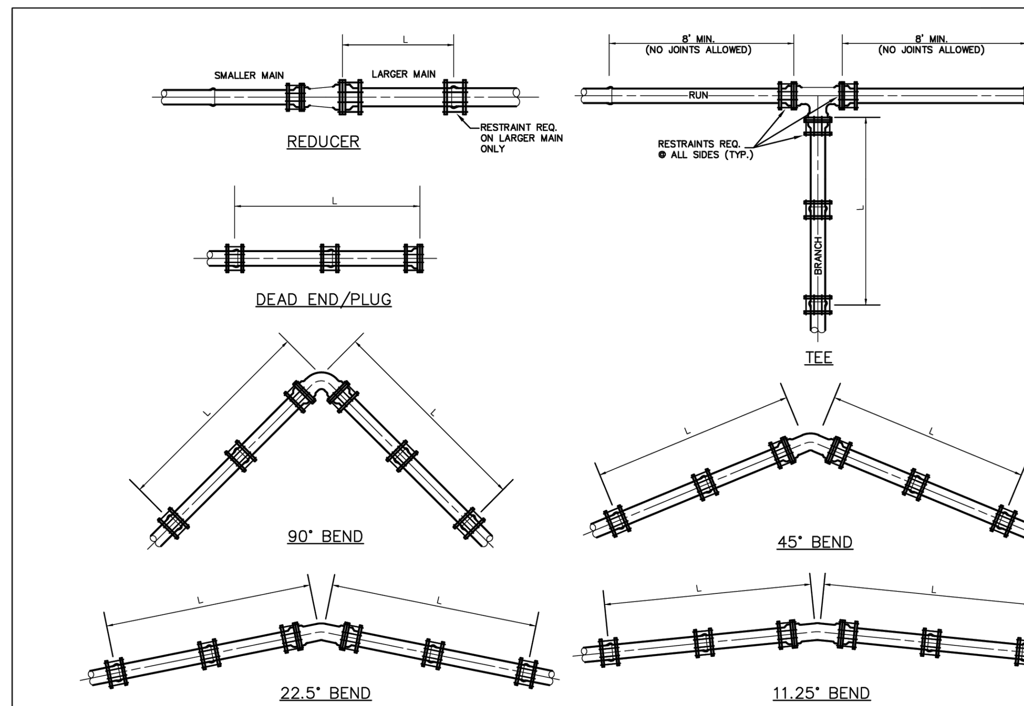

TABLE OF THRUST RESTRAINT LENGTHS

PIPE SIZE (inches)	90° BEND P.V.C. (L)	90° BEND DUCTILE IRON (L)	45° BEND P.V.C. (L)	45° BEND DUCTILE IRON (L)	22 1/2° BEND P.V.C. (L)	22 1/2° BEND DUCTILE IRON (L)	11 1/4° BEND P.V.C. (L)	11 1/4° BEND DUCTILE IRON (L)	TEES P.V.C. (L)	TEES DUCTILE IRON (L)	DEAD END & PLUG P.V.C. (L)	DEAD END & PLUG DUCTILE IRON (L)	REDUCER PIPE SIZES	REDUCER P.V.C. (L)	REDUCER DUCTILE IRON (L)
4	20'	16'	8'	7'	4'	3'	2'	2'	15'	10'	45'	29'	6"x4"	33'	21'
6	28'	22'	12'	9'	6'	4'	3'	2'	33'	21'	63'	40'	8"x6"	34'	22'
8	36'	29'	15'	12'	7'	6'	4'	3'	52'	33'	82'	52'	10"x8"	33'	21'
10	43'	34'	18'	14'	9'	7'	4'	3'	68'	43'	98'	63'	12"x10"	34'	22'
12	50'	40'	21'	17'	10'	8'	5'	4'	84'	54'	116'	74'	16"x12"	63'	40'
16	63'	51'	26'	21'	13'	10'	6'	5'	116'	74'	148'	94'	18"x16"	33'	21'
18	70,	56'	29'	23'	14'	11'	7'	6'	131'	83'	163'	103'	20"x18"	33'	21'
20	75'	61'	31'	25'	15'	12'	7'	6'	145'	92'	178'	113'	20"x20"	62'	39'
24	86'	70'	36'	29'	17'	14'	9'	7'	173'	110'	207'	132'			

THRUST RESTRAINT DESIGN NOTES

1. RESTRAINT JOINTS, FITTINGS, & VALVE REQUIREMENTS CALCULATED BY THE THRUST RESTRAINT DESIGN PROGRAM PROVIDED BY EBBA IRON SALES, INC.
2. DATA BASED ON MAX. PRESSURE OF 150 p.s.i., THE UNIFIED SOILS CLASSIFICATION SYSTEM (SOIL TYPE SP), THE PIPE BEDDED IN NATIVE SOIL w/ A MINIMUM OF 2.5' COMPACTED FILL OVER THE PIPE, AND USING A SAFETY FACTOR OF 1.5 FOR THE DATA.
3. ALL FITTINGS & VALVES SHALL HAVE RESTRAINED WITH "MEGA-LUG' RESTRAINTS, & ALL BELL & SPIGOT JOINTS TO BE RESTRAINED WITH A RESTRAINING HARNESS WITHIN THE REQUIRED LENGTH OF RESTRAINED PIPE (L).

THRUST RESTRAINT
NOT TO SCALE

Howey–in–the–Hills Standard Details | DATE: FEB 2022 | DETAIL PW-7

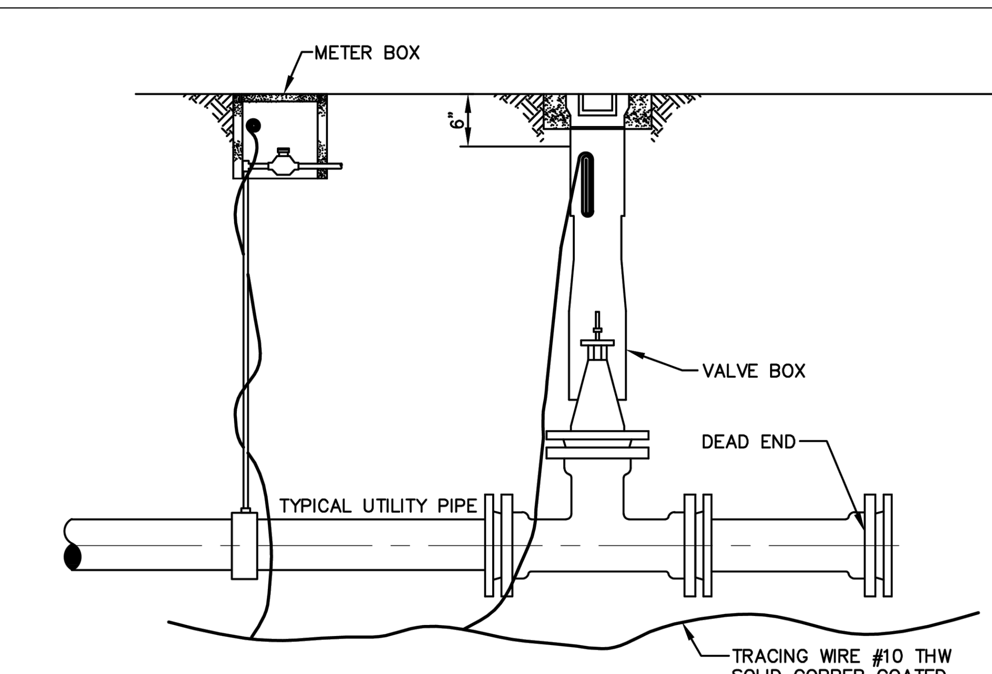

ALL PIPE INSTALLED VIA OPEN CUT SHALL BE INSTALLED WITH #10 THW SOLID COPPER COATED TRACING WIRE. ALL PIPE INSTALLED VIA HDD SHALL BE INSTALLED WITH TWO #10 COPPER CLAD STEEL WIRES.

THE TRACING WIRE MUST BE INSTALLED DIRECTLY BELOW THE PIPE AND BROUGHT TO THE SURFACE AT 500' MINIMUM INTERVALS. WIRE SHALL EXTEND A MINIMUM OF 12" ABOVE GRADE AT EACH INTERVAL AND BE COILED AND PLACED IN A VALVE BOX, METER BOX, MANHOLE, CLEANOUT, LOCATE WIRE BOX, OR OTHER APPLICABLE STRUCTURE.

COLOR CODING:

POTABLE WATER SYSTEM: BLUE
REUSE WATER SYSTEM: PANTONE PURPLE
SANITARY SEWER, FORCE MAINS AND LOW PRESSURE SEWER SYSTEMS: GREEN

1. FOR LOW PRESSURE SEWER, POTABLE WATER AND REUSE WATER SYSTEMS: WIRE SHALL BE INSTALLED BELOW ALL MAINS AND SERVICE LINES AND ATTACHED TO VALVES, HYDRANTS AND FITTINGS. WIRE INSTALLED WITH SERVICE LINES SHALL CONNECT TO THE WIRE INSTALLED BELOW THE MAIN AND EXTEND TO THE CURB STOP.
2. FIRE SPRINKLER LINES: WIRE SHALL CONNECT TO THE WIRE INSTALLED BELOW THE MAIN AND EXTEND TO THE RISER CONNECTION.
3. SANITARY SEWER FORCE MAINS: WIRE SHALL BE INSTALLED BELOW THE FORCE MAIN AND ATTACHED TO ALL VALVES AND FITTINGS AND BROUGHT TO THE SURFACE AND PLACED IN A METAL, CITY OF TAVARES APPROVED, VALVE BOX.
4. DEAD END MAINS: WIRE SHALL BE PLACED IN A PROPERLY IDENTIFIED METAL VALVE BOX AT THE END OF THE RUN.
5. WIRE SHALL NOT BE FASTENED OR COILED TO VALVE OPERATING NUT.
6. UTILITY TRACING WIRE SHALL BE IN ACCORDANCE WITH CITY CSM AND PER CITY'S APPROVED MANUFACTURER LIST.

UTILITY PIPE LOCATION MATERIAL – WIRE
NOT TO SCALE

Howey–in–the–Hills Standard Details | DATE: FEB 2022 | DETAIL PW-8

MADDEN
MOORHEAD & STOKES, LLC
CIVIL ENGINEERS
431 E. Horatio Avenue
Suite 260
Maitland, Florida 32751
(407) 629-8330
CA# 0007723

CITY DETAILS
FOR
LAKE HILLS SHOPPING CENTER
TOWN OF HOWEY IN THE HILLS
FLORIDA

WINDCREST DEVELOPMENT GROUP, INC.
605 E. ROBINSON ST. SUITE 340
ORLANDO, FL 32801
407-219-3540

	DATE	REVISIONS
1		
2		
3		
4		
5		
6		
7		
8		
9		
10		
11		

BENJAMIN S. BECKHAM
LICENSE
NO. 79452
STATE OF FLORIDA
PROFESSIONAL ENGINEER

This item has been digitally signed and sealed by Benjamin S. Beckham, PE on the date adjacent to the seal.

Printed copies of this document are not considered signed and sealed and the signature must be verified on any electronic copies.

ENGINEER OF RECORD

JOB # 22041
DATE: 08/06/24
DATUM: NAVD 88
DESIGNED BY: KGS
DRAWN BY: JAS
APPROVED BY: BSB

C910

THESE DOCUMENTS AND THEIR CONTENTS ARE THE PROPERTY OF MADDEN, MOORHEAD & STOKES, LLC. AND ARE ISSUED ONLY FOR THE SPECIFIC PROJECT NOTED ON THESE DRAWINGS. ANY REPRODUCTIONS, REVISIONS OR MODIFICATIONS OF THESE DOCUMENTS WITHOUT THE EXPRESSED WRITTEN CONSENT OF MADDEN, MOORHEAD & STOKES, LLC. IS PROHIBITED BY LAW.

H:\Data\22MMS0410-Lake Harris Publix\Eng\Final\22041-C910-CITY DETAILS.dwg January 10, 2025 2:37 PM

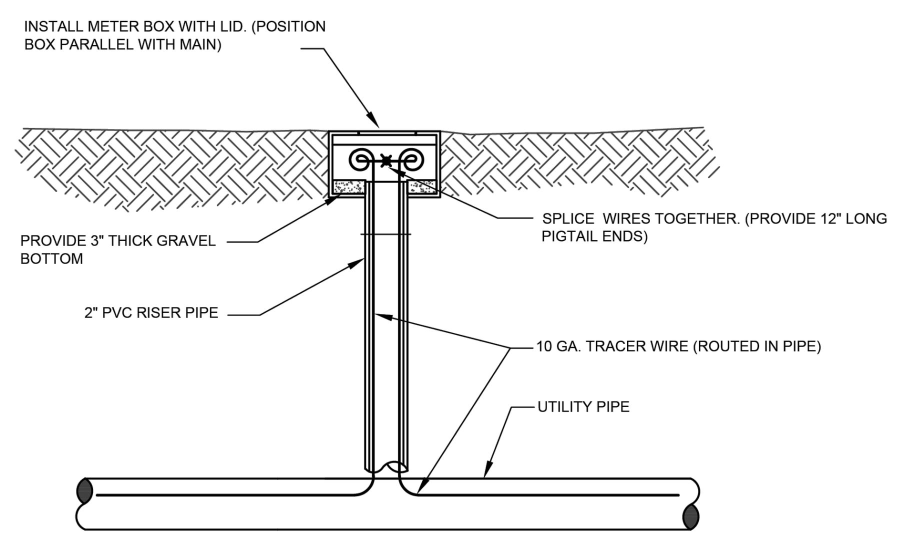

TRACER WIRE BOX UTILIZING METER BOX

NOTES:

1. TRACER WIRE STATION BOX TO BE INSTALLED WHERE THE WIRE CANNOT BE BROUGHT TO GRADE IN A VALVE BOX WITHIN THE MANDATORY 500 FOOT INTERVAL OR WHERE A SPLICE MUST BE MADE ON THE TRACER WIRING. NO UNDERGROUND SPLICES.
2. BOXES SHALL NOT BE LOCATED IN ROADWAYS OR DRIVEWAYS.
3. BOX AND LID PER DETAIL PW-19.
4. TRAFFIC RATED LID (STANDARD-NON BOLT DOWN)
5. LID COLOR SHALL BE PRE-MANUFACTURED OR PAINTED TO MATCH SERVICE (BLUE= POTABLE WATER, GREEN=WASTEWATER, PANTONE PURPLE=RECLAIMED WATER)

TRACER WIRE BOX

Howey—in—the—Hills
NOT TO SCALE
Standard Details
DATE: FEB 2022
DETAIL PW-9

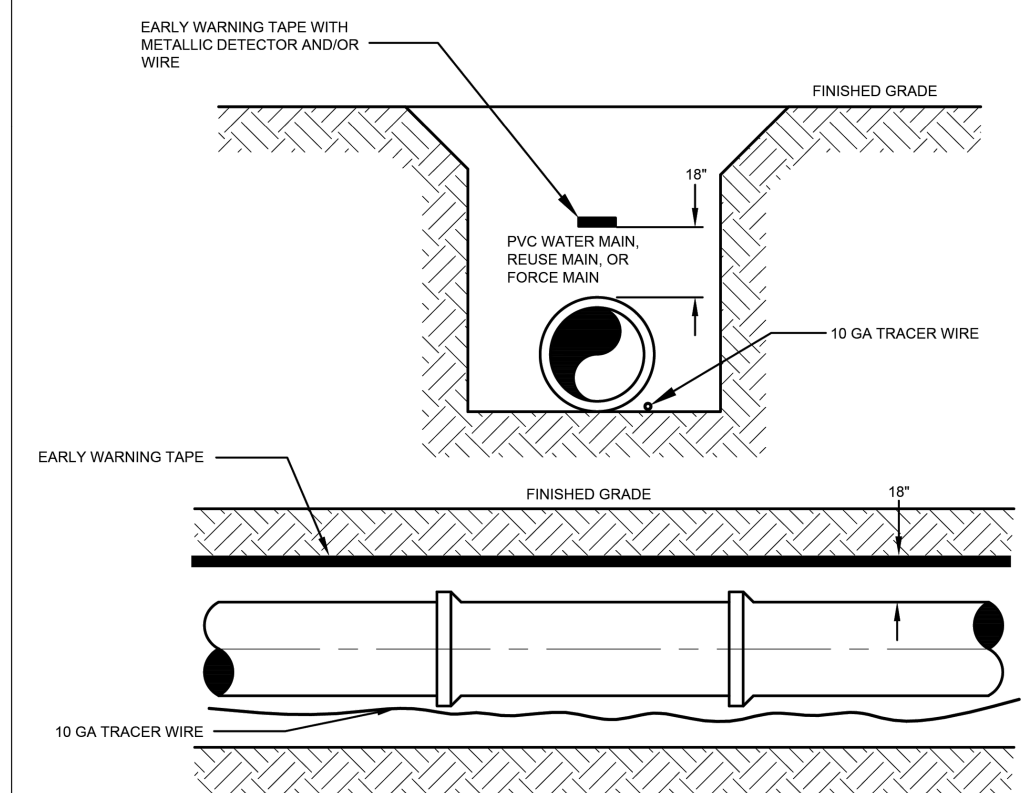

NOTES:

1. ALL MAINS INSTALLED BY OPEN CUT SHALL HAVE AN "EARLY WARNING" PROTECTION TAPE AND WIRE INSTALLED CONTINUOUSLY ALONG THE ALIGNMENT. THE PROTECTION TAPE SHALL BE PER THE CITY'S APPROVED MANUFACTURER LIST. TAPE SHALL BE INSTALLED DURING BACKFILLING 18" ABOVE THE PIPE AND SHALL BE CONTINUOUSLY MARKED FOR THE TYPE OF PIPE (EXAMPLE: CAUTION, WATER MAIN BURIED BELOW"). THE TAPE SHALL HAVE A METALLIC DETECTABLE STRIP INCLUDED AND COLOR CODED AS FOLLOWS:
   BLUE - POTABLE WATER
   GREEN - SANITARY FORCE MAIN, GRAVITY SEWER, LOW PRESSURE MAIN
   PANTONE PURPLE - RECLAIMED WATER
   RED - DEDICATED FIRE LINE
2. ALL PVC MAINS SHALL BE A SOLID COLOR AS DESCRIBED ABOVE.
   ALL DUCTILE IRON MAINS SHALL BE WRAPPED WITH COLOR CODED BAGS.
   ALL POTABLE WATER PIPE SHALL BEAR THE NATIONAL SANITATION FOUNDATION (NSL) SEAL OF APPROVAL.

UTILITY PIPE LOCATION MATERIAL — TAPE

NOT TO SCALE

Howey—in—the—Hills
Standard Details
DATE: FEB 2022
DETAIL PW-10

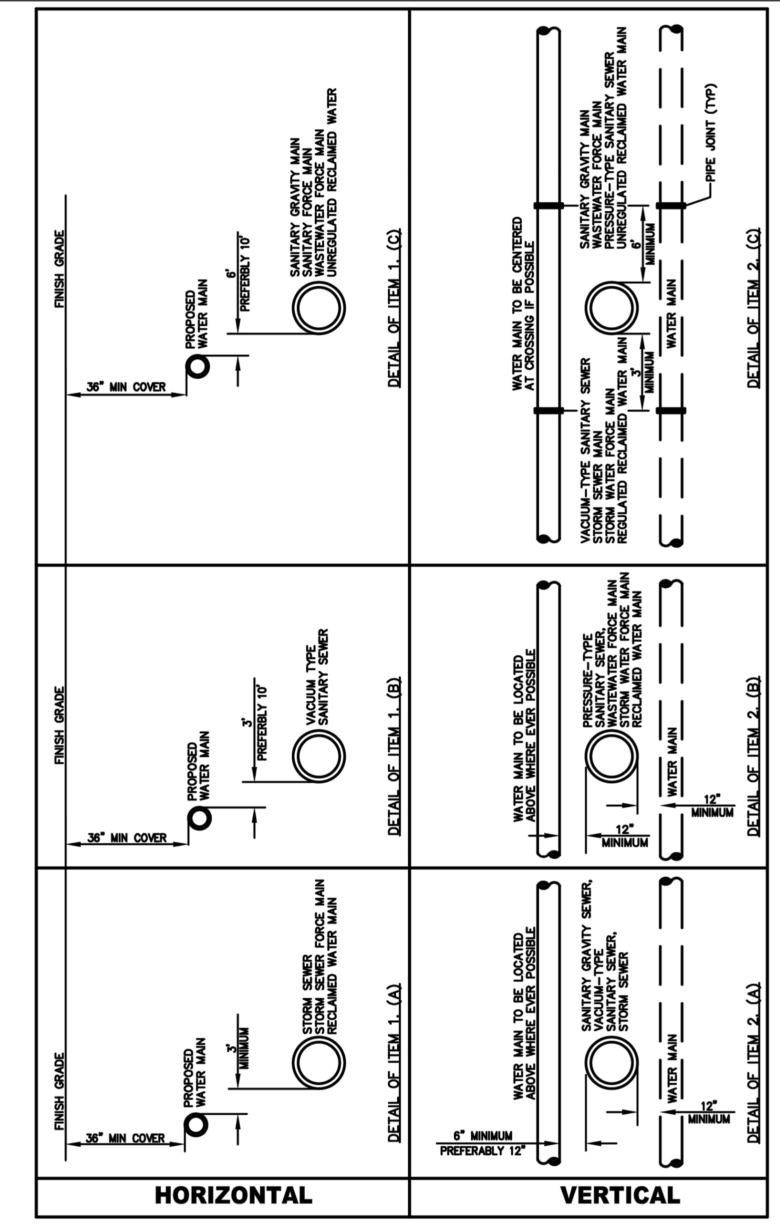

UTILITY SEPARATION

NOT TO SCALE

Howey—in—the—Hills
Standard Details
DATE: FEB 2022
DETAIL PW-11A

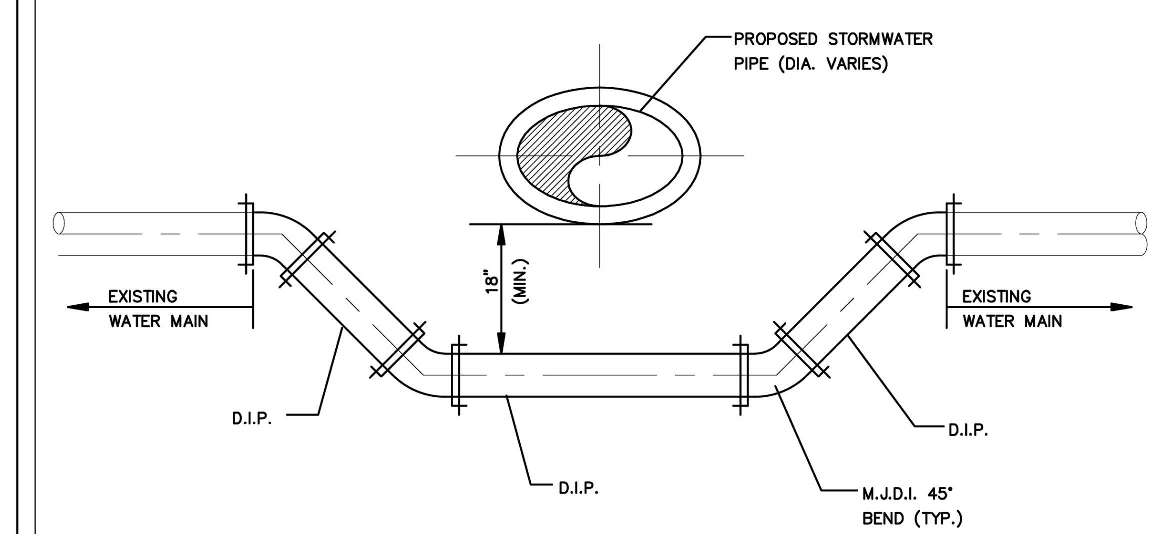

NOTES:

1. ALL PROPOSED JOINTS SHALL BE RESTRAINED.
2. ALL EXISTING JOINTS WITHIN SHALL BE RESTRAINED IN ACCORDANCE WITH GR-6.
3. ALL PIPING CLEARANCES SHALL BE IN ACCORDANCE WITH CHAPTER 62-555.314 F.A.C.

WATER LINE CROSSING

NOT TO SCALE

Howey—in—the—Hills
Standard Details
DATE: FEB 2022
DETAIL PW-11B

GENERAL WATER NOTES

1. WATER SYSTEM COMPONENTS SHALL BE INSTALLED IN STRICT ACCORDANCE WITH ALL LOCAL CODES AND REGULATIONS, CLEANED, DISINFECTED AND BACTERIOLOGICALLY CLEARED FOR SERVICE IN ACCORDANCE WITH THE LATEST AWWA STANDARDS AND CHAPTER 62-555 FLORIDA ADMINISTRATIVE CODE.
2. ALL PIPING SHALL BEAR THE "NSF" SEAL FOR POTABLE WATER.
3. WATER MAINS SHALL BE PVC CONFORMING TO AWWA C-900, DR 18 FOR PIPE SIZES 4"-12". PIPES 14" OR LARGER SHALL BE AWWA C-905, DR 18. ALL COUPLINGS, CLEANING COMPOUNDS, SOLVENTS, LUBRICANTS, AND PIPE PREPARATION, FOR LAYING, SHALL BE IN ACCORDANCE WITH THE PIPE MANUFACTURER'S LATEST RECOMMENDATIONS.
4. DEPTH OF WATER LINES TO BE 36" MINIMUM COVER FROM FINISH GRADE.
5. WATER MAINS TO BE LOCATED 5' FROM BACK OF CURB OR EDGE OF PAVEMENT UNLESS OTHERWISE NOTED.
6. ALL WATER MAINS UNDER PAVEMENT SHALL BE DUCTILE IRON.
7. ALL CASINGS UNDER PAVEMENT SHALL EXTEND 5' BEYOND THE BACK OF CURB.
8. DISINFECTING: FOLLOWING THE PRESSURE TESTING, THE CONTRACTOR SHALL DISINFECT ALL SECTIONS OF THE NEW WATER DISTRIBUTION SYSTEM. DISINFECTION SHALL BE IN ACCORDANCE WITH THE APPLICABLE PROVISIONS OF AWWA STANDARD C651 "DISINFECTING WATER MAINS", AND ALL APPROPRIATE AGENCY APPROVAL.
9. ALL HYDROSTATIC TESTS SHALL BE IN ACCORDANCE WITH AWWA C600 FOR DUCTILE IRON PIPE AND C605/M23 FOR PVC PIPE.
10. ALL WATER MAINS SHALL BE INSTALLED, PRESSURE AND LEAK TESTED IN ACCORDANCE WITH AWWA C600, (62-555.320(21)(B)1 AND 62-555.330, F.A.C. ALL INSTALLATION, TESTING AND FIELD PROCEDURES MUST BE PROVIDED AND MUST CONFORM TO THE APPLICABLE AWWA STANDARDS.
11. ALL PIPING MATERIALS AND SPECIFICATIONS COVERING PIPES, JOINTS AND PACKING MATERIALS, INTERNAL COATING AND LININGS, FITTINGS, SPECIALS AND APPURTENANCES SHALL ALL BE IN ACCORDANCE WITH THE CORRESPONDING AWWA STANDARDS AND BE CONFORMING TO NSF REQUIREMENTS, AS MAY BE APPLICABLE, WITH EXCEPTIONS ALLOWED ONLY IF DOCUMENTATION AND ASSURANCES ARE PROVIDED IN COMPLIANCE WITH PARAGRAPHS 62-555.320(3) (D), 622-555.320 (3) (B), AND 62-555.320 (21) (C), F.A.C. THE LEAD USE PROHIBITION IN RULE 62-555.322, F.A.C. SHALL ALSO APPLY. POLYETHYLENE TUBING SHALL BE PER AWWA C901. UNDERGROUND SERVICE LINES AND VALVES SHALL BE PER AWWA C800.

COLOR CODING

ALL PIPE AND PIPE FITTINGS INSTALLED UNDER THIS PROJECT WILL BE COLOR CODED OR MARKED IN ACCORDANCE WITH SUBPARAGRAPH 62-555.320(21)(B)3, F.A.C., USING BLUE AS A PREDOMINANT COLOR. (UNDERGROUND PLASTIC PIPE WILL BE SOLID-WALL BLUE PIPE, WILL HAVE A CO-EXTRUDED BLUE EXTERNAL SKIN, OR WILL BE WHITE OR BLACK PIPE WITH BLUE STRIPES INCORPORATED INTO, OR APPLIED TO, THE PIPE WALL; AND UNDERGROUND METAL OR CONCRETE PIPE WILL HAVE BLUE STRIPES APPLIED TO THE PIPE WALL. PIPE STRIPED DURING MANUFACTURING OF THE PIPE WILL HAVE CONTINUOUS STRIPES THAT RUN PARALLEL TO THE AXIS OF THE PIPE, THAT ARE LOCATED AT NO GREATER THAN 90-DEGREE INTERVALS AROUND THE PIPE, AND THAT WILL REMAIN INTACT DURING AND AFTER INSTALLATION OF THE PIPE. IF TAPE OR PAINT IS USED TO STRIPE PIPE DURING INSTALLATION OF THE PIPE, THE TAPE OR PAINT WILL BE APPLIED IN A CONTINUOUS LINE THAT RUNS PARALLEL TO THE AXIS OF THE PIPE AND THAT IS LOCATED ALONG THE TOP OF THE PIPE; FOR PIPE WITH AN INTERNAL DIAMETER OF 24 INCHES OR GREATER, TAPE OR PAINT WILL BE APPLIED IN CONTINUOUS LINES ALONG EACH SIDE OF THE PIPE AS WELL AS ALONG THE TOP OF THE PIPE. ABOVEGROUND PIPE WILL BE PAINTED BLUE OR WILL BE COLOR CODED OR MARKED LIKE UNDERGROUND PIPE.) [FAC 62\CELL 555.320(21)(B)3]

UNLESS DESCRIBED IN THE CITY CSM ELSEWHERE, ALL WATER MAINS SHALL BE INSTALLED IN ACCORDANCE WITH **CHAPTER 62-555.314, F.A.C.,** AND ANY UPDATES TO THE F.A.C., AND IN CONFORMANCE WITH ALL SEPARATION REQUIREMENTS AS FOUND THEREIN.

62-555.314 LOCATION OF PUBLIC WATER SYSTEM MAINS.

FOR THE PURPOSE OF THIS SECTION, THE PHRASE "WATER MAINS" SHALL MEAN MAINS, INCLUDING TREATMENT PLANT PROCESS PIPING, CONVEYING EITHER RAW, PARTIALLY TREATED, OR FINISHED DRINKING WATER; FIRE HYDRANT LEADS; AND SERVICE LINES THAT ARE UNDER THE CONTROL OF A PUBLIC WATER SYSTEM AND THAT HAVE AN INSIDE DIAMETER OF THREE INCHES OR GREATER.

(1) HORIZONTAL SEPARATION BETWEEN UNDERGROUND WATER MAINS AND SANITARY OR STORM SEWERS, WASTEWATER OR STORMWATER FORCE MAINS, RECLAIMED WATER PIPELINES, AND ON-SITE SEWAGE TREATMENT AND DISPOSAL SYSTEMS.

(A) NEW OR RELOCATED, UNDERGROUND WATER MAINS SHALL BE LAID TO PROVIDE A HORIZONTAL DISTANCE OF AT LEAST THREE FEET BETWEEN THE OUTSIDE OF THE WATER MAIN AND THE OUTSIDE OF ANY EXISTING OR PROPOSED STORM SEWER, STORMWATER FORCE MAIN, OR PIPELINE CONVEYING RECLAIMED WATER REGULATED UNDER PART III OF CHAPTER 62-610, F.A.C

(B) NEW OR RELOCATED, UNDERGROUND WATER MAINS SHALL BE LAID TO PROVIDE A HORIZONTAL DISTANCE OF AT LEAST THREE FEET, AND PREFERABLY TEN FEET, BETWEEN THE OUTSIDE OF THE WATER MAIN AND THE OUTSIDE OF ANY EXISTING OR PROPOSED VACUUM-TYPE SANITARY SEWER.

(C) NEW OR RELOCATED, UNDERGROUND WATER MAINS SHALL BE LAID TO PROVIDE A HORIZONTAL DISTANCE OF AT LEAST SIX FEET, AND PREFERABLY TEN FEET, BETWEEN THE OUTSIDE OF THE WATER MAIN AND THE OUTSIDE OF ANY EXISTING OR PROPOSED GRAVITY- OR PRESSURE-TYPE SANITARY SEWER, WASTEWATER FORCE MAIN, OR PIPELINE CONVEYING RECLAIMED WATER NOT REGULATED UNDER PART III OF CHAPTER 62-610, F.A.C. THE MINIMUM HORIZONTAL SEPARATION DISTANCE BETWEEN WATER MAINS AND GRAVITY-TYPE SANITARY SEWERS SHALL BE REDUCED TO THREE FEET WHERE THE BOTTOM OF THE WATER MAIN IS LAID AT LEAST SIX INCHES ABOVE THE TOP OF THE SEWER.

Howey—in—the—Hills
Standard Details
DATE: FEB 2022
DETAIL PW-11C

GENERAL WATER NOTES

(D) NEW OR RELOCATED, UNDERGROUND WATER MAINS SHALL BE LAID TO PROVIDE A HORIZONTAL DISTANCE OF AT LEAST TEN FEET BETWEEN THE OUTSIDE OF THE WATER MAIN AND ALL PARTS OF ANY EXISTING OR PROPOSED "ON-SITE SEWAGE TREATMENT AND DISPOSAL SYSTEM" AS DEFINED IN SECTION 381.0065(2), F.S., AND RULE 64E-6.002, F.A.C.

(2) VERTICAL SEPARATION BETWEEN UNDERGROUND WATER MAINS AND SANITARY OR STORM SEWERS, WASTEWATER OR STORMWATER FORCE MAINS AND RECLAIMED WATER PIPELINES.

(A) NEW OR RELOCATED, UNDERGROUND WATER MAINS CROSSING ANY EXISTING OR PROPOSED GRAVITY- OR VACUUM-TYPE SANITARY SEWER OR STORM SEWER SHALL BE LAID SO THE OUTSIDE OF THE WATER MAIN IS AT LEAST SIX INCHES, AND PREFERABLY 12 INCHES, ABOVE OR AT LEAST 12 INCHES BELOW THE OUTSIDE OF THE OTHER PIPELINE. HOWEVER, IT IS PREFERABLE TO LAY THE WATER MAIN ABOVE THE OTHER PIPELINE.

(3) SEPARATION BETWEEN WATER MAINS AND SANITARY OR STORM SEWER MANHOLES:

(A) NO WATER MAIN SHALL PASS THROUGH, OR COME INTO CONTACT WITH, ANY PART OF A SANITARY SEWER MANHOLE.

(B) EFFECTIVE AUGUST 28, 2003, WATER MAINS SHALL NOT BE CONSTRUCTED OR ALTERED TO PASS THROUGH, OR COME INTO CONTACT WITH, ANY PART OF A STORM SEWER MANHOLE OR INLET STRUCTURE. WHERE IT IS NOT TECHNICALLY FEASIBLE OR ECONOMICALLY SENSIBLE TO COMPLY WITH THIS REQUIREMENT (I.E., WHERE THERE IS A CONFLICT IN THE ROUTING OF A WATER MAIN AND A STORM SEWER AND WHERE ALTERNATIVE ROUTING OF THE WATER MAIN OR THE STORM SEWER IS NOT TECHNICALLY FEASIBLE OR IS NOT ECONOMICALLY SENSIBLE), THE DEPARTMENT SHALL ALLOW EXCEPTIONS TO THIS REQUIREMENT (I.E., THE DEPARTMENT SHALL ALLOW CONSTRUCTION OF CONFLICT MANHOLES), BUT SUPPLIERS OF WATER OR PERSONS PROPOSING TO CONSTRUCT CONFLICT MANHOLES MUST FIRST OBTAIN A SPECIFIC PERMIT FROM THE DEPARTMENT AND MUST PROVIDE IN THE PRELIMINARY DESIGN REPORT OR DRAWINGS, SPECIFICATIONS, AND DESIGN DATA ACCOMPANYING THEIR PERMIT APPLICATION THE FOLLOWING INFORMATION:
1. TECHNICAL OR ECONOMIC JUSTIFICATION FOR EACH CONFLICT MANHOLE.
2. A STATEMENT IDENTIFYING THE PARTY RESPONSIBLE FOR MAINTAINING EACH CONFLICT MANHOLE.
3. ASSURANCE OF COMPLIANCE WITH THE DESIGN AND CONSTRUCTION REQUIREMENTS IN SUB-PARAGRAPHS A. THROUGH D. BELOW. - 361
   A. EACH WATER MAIN PASSING THROUGH A CONFLICT MANHOLE SHALL HAVE A FLEXIBLE, WATERTIGHT JOINT ON EACH SIDE OF THE MANHOLE TO ACCOMMODATE DIFFERENTIAL SETTLING BETWEEN THE MAIN AND THE MANHOLE.
   B. WITHIN EACH CONFLICT MANHOLE, THE WATER MAIN PASSING THROUGH THE MANHOLE SHALL BE INSTALLED IN A WATERTIGHT CASING PIPE HAVING HIGH IMPACT STRENGTH (I.E., HAVING IMPACT STRENGTH AT LEAST EQUAL TO THAT OF 0.25-INCH-THICK DUCTILE IRON PIPE).
   C. EACH CONFLICT MANHOLE SHALL HAVE AN ACCESS OPENING, AND SHALL BE SIZED, TO ALLOW FOR EASY CLEANING OF THE MANHOLE.
   D. GRATINGS SHALL BE INSTALLED AT ALL STORM SEWER INLETS UPSTREAM OF EACH CONFLICT MANHOLE TO PREVENT LARGE OBJECTS FROM ENTERING THE MANHOLE.

(4) SEPARATION BETWEEN FIRE HYDRANT DRAINS AND SANITARY OR STORM SEWERS, WASTEWATER OR STORMWATER FORCE MAINS, RECLAIMED WATER PIPELINES, AND ON-SITE SEWAGE TREATMENT AND DISPOSAL SYSTEMS.

(A) NEW OR RELOCATED FIRE HYDRANTS WITH UNDERGROUND DRAINS SHALL BE LOCATED SO THAT THE DRAINS ARE AT LEAST THREE FEET FROM ANY EXISTING OR PROPOSED STORM SEWER, STORMWATER FORCE MAIN, OR PIPELINE CONVEYING RECLAIMED WATER REGULATED UNDER PART III OF CHAPTER 62-610, F.A.C.; AT LEAST THREE FEET, AND PREFERABLY TEN FEET, FROM ANY EXISTING OR PROPOSED VACUUM-TYPE SANITARY SEWER; AT LEAST SIX FEET, AND PREFERABLY TEN FEET, FROM ANY EXISTING OR PROPOSED GRAVITY- OR PRESSURE-TYPE SANITARY SEWER, WASTEWATER FORCE MAIN, OR PIPELINE CONVEYING RECLAIMED WATER NOT REGULATED UNDER PART III OF CHAPTER 62-610, F.A.C.; AND AT LEAST TEN FEET FROM ANY EXISTING OR PROPOSED "ON-SITE SEWAGE TREATMENT AND DISPOSAL SYSTEM" AS DEFINED IN SECTION 381.0065(2), F.S., AND RULE 64E-6.002, F.A.C.

Howey—in—the—Hills
Standard Details
DATE: FEB 2022
DETAIL PW-11D

GENERAL WATER NOTES

(5) EXCEPTIONS. WHERE IT IS NOT TECHNICALLY FEASIBLE OR ECONOMICALLY SENSIBLE TO COMPLY WITH THE REQUIREMENTS IN SUBSECTION (1) OR (2) ABOVE, THE DEPARTMENT SHALL ALLOW EXCEPTIONS TO THESE REQUIREMENTS IF SUPPLIERS OF WATER OR CONSTRUCTION PERMIT APPLICANTS PROVIDE TECHNICAL OR ECONOMIC JUSTIFICATION FOR EACH EXCEPTION AND PROVIDE ALTERNATIVE CONSTRUCTION FEATURES THAT AFFORD A SIMILAR LEVEL OF RELIABILITY AND PUBLIC HEALTH PROTECTION. ACCEPTABLE ALTERNATIVE CONSTRUCTION FEATURES INCLUDE THE FOLLOWING:

(A) WHERE AN UNDERGROUND WATER MAIN IS BEING LAID LESS THAN THE REQUIRED MINIMUM HORIZONTAL DISTANCE FROM ANOTHER PIPELINE AND WHERE AN UNDERGROUND WATER MAIN IS CROSSING ANOTHER PIPELINE AND JOINTS IN THE WATER MAIN ARE BEING LOCATED LESS THAN THE REQUIRED MINIMUM DISTANCE FROM JOINTS IN THE OTHER PIPELINE:
1. USE OF PRESSURE-RATED PIPE CONFORMING TO THE AMERICAN WATER WORKS ASSOCIATION STANDARDS INCORPORATED INTO RULE 62-555.330, F.A.C., FOR THE OTHER PIPELINE IF IT IS A GRAVITY- OR VACUUM-TYPE PIPELINE;
2. USE OF WELDED, FUSED, OR OTHERWISE RESTRAINED JOINTS FOR EITHER THE WATER MAIN OR THE OTHER PIPELINE; OR
3. USE OF WATERTIGHT CASING PIPE OR CONCRETE ENCASEMENT AT LEAST FOUR INCHES THICK FOR EITHER THE WATER MAIN OR THE OTHER PIPELINE.

(B) WHERE AN UNDERGROUND WATER MAIN IS BEING LAID LESS THAN THREE FEET HORIZONTALLY FROM ANOTHER PIPELINE AND WHERE AN UNDERGROUND WATER MAIN IS CROSSING ANOTHER PIPELINE AND IS BEING LAID LESS THAN THE REQUIRED MINIMUM VERTICAL DISTANCE FROM THE OTHER PIPELINE:
1. USE OF PIPE, OR CASING PIPE, HAVING HIGH IMPACT STRENGTH (I.E., HAVING AN IMPACT STRENGTH AT LEAST EQUAL TO THAT OF 0.25-INCH-THICK DUCTILE IRON PIPE) OR CONCRETE ENCASEMENT AT LEAST FOUR INCHES THICK FOR THE WATER MAIN; AND
2. USE OF PIPE, OR CASING PIPE, HAVING HIGH IMPACT STRENGTH (I.E., HAVING AN IMPACT STRENGTH AT LEAST EQUAL TO THAT OF 0.25-INCH-THICK DUCTILE IRON PIPE) OR CONCRETE ENCASEMENT AT LEAST FOUR INCHES THICK FOR THE OTHER PIPELINE IF IT IS NEW AND IS CONVEYING WASTEWATER OR RECLAIMED WATER.

Howey—in—the—Hills
Standard Details
DATE: FEB 2022
DETAIL PW-11E

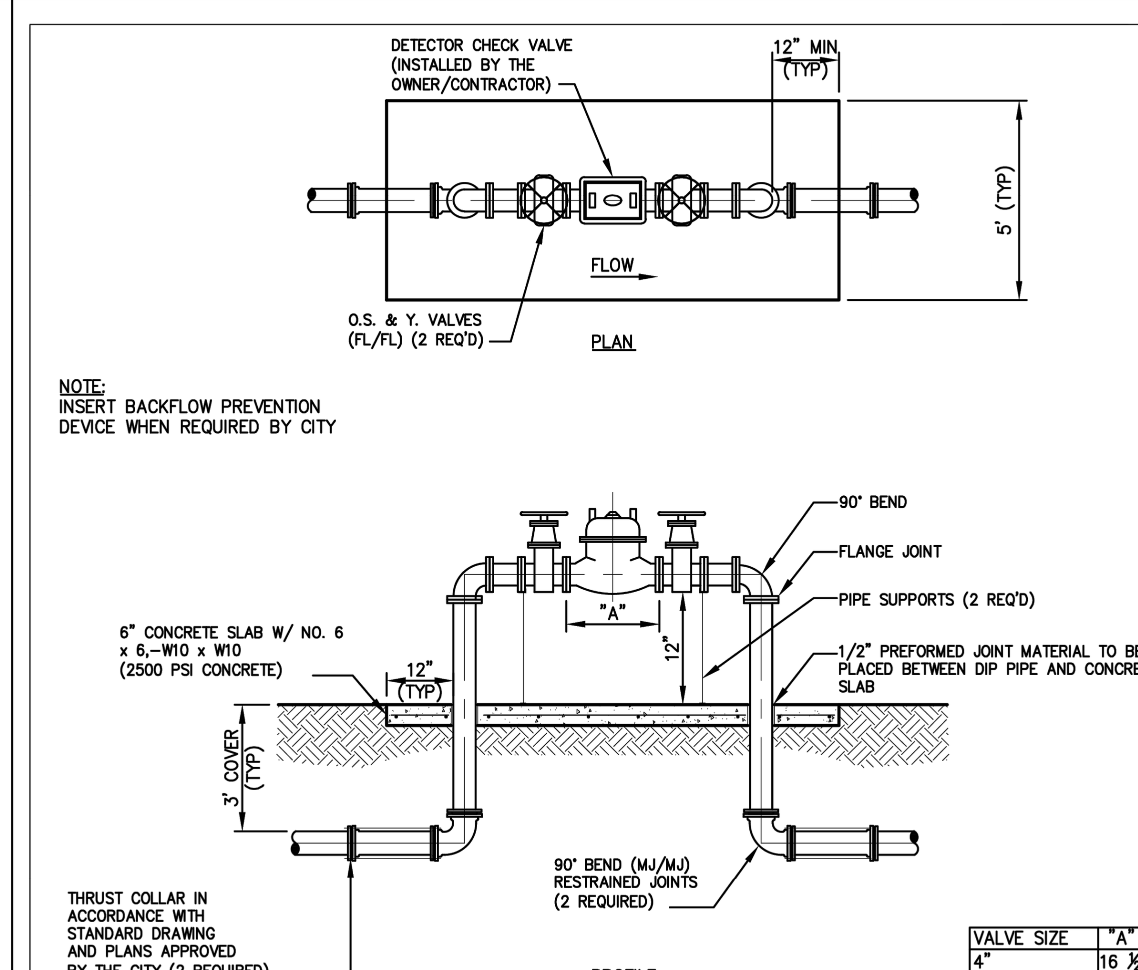

NOTE:
INSERT BACKFLOW PREVENTION DEVICE WHEN REQUIRED BY CITY

VALVE SIZE	"A"
4"	16 ½"
6"	22 ½"
8"	26 ½"

NOTES:

1. ALL ABOVE GROUND PIPE JOINTS SHALL BE FLANGED.
2. DETECTOR CHECK VALVE SHALL BE INSTALLED BY THE CONTRACTOR.

DETECTOR CHECK VALVE ASSEMBLY

NOT TO SCALE

Howey—in—the—Hills
Standard Details
DATE: FEB 2022
DETAIL PW-12

MADDEN
MOORHEAD & STOKES, LLC
CIVIL ENGINEERS
431 E. Horatio Avenue
Suite 260
Maitland, Florida 32751
(407) 629-8330
CA# 0007723

CITY DETAILS
FOR
LAKE HILLS SHOPPING CENTER
TOWN OF HOWEY IN THE HILLS
FLORIDA

WINDCREST DEVELOPMENT GROUP, INC.
605 E. ROBINSON ST. SUITE 340
ORLANDO, FL 32801
407-219-3540

	DATE	REVISIONS
1		
2		
3		
4		
5		
6		
7		
8		
9		
10		
11		

BENJAMIN S. BECKHAM LICENSE NO. 79452 STATE OF FLORIDA PROFESSIONAL ENGINEER

This item has been digitally signed and sealed by Benjamin S. Beckham, PE on the date adjacent to the seal.

Printed copies of this document are not considered signed and sealed and the signature must be verified on any electronic copies.

ENGINEER OF RECORD

JOB # 22041
DATE: 08/06/24
DATUM: NAVD 88
DESIGNED BY: KGS
DRAWN BY: JAS
APPROVED BY: BSB

C911

THESE DOCUMENTS AND THEIR CONTENTS ARE THE PROPERTY OF MADDEN, MOORHEAD & STOKES, LLC. AND ARE ISSUED ONLY FOR THE SPECIFIC PROJECT NOTED ON THESE DRAWINGS. ANY REPRODUCTIONS, REVISIONS OR MODIFICATIONS OF THESE DOCUMENTS WITHOUT THE EXPRESSED WRITTEN CONSENT OF MADDEN, MOORHEAD & STOKES, LLC. IS PROHIBITED BY LAW.

H:\Data\22MMS0410-Lake Harris Publix\Eng\Final\22041-C910-CITY DETAILS.dwg January 10, 2025 2:37 PM

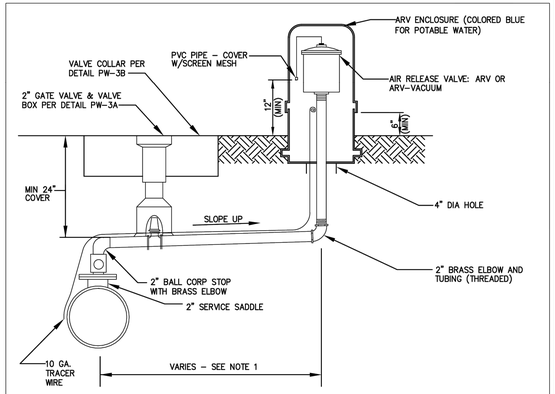

NOTES:

1. OFFSET DISTANCE SHOWN ON DRAWINGS.
2. ADJUST HORIZONTAL LOCATION OF ARV ENCLOSURE, AS REQUIRED TO AVOID SIDEWALK. LOCATE ARV ENCLOSURE WITHIN 1' OF R/W OR AS OTHERWISE DETERMINED BY THE CITY.

OFFSET AIR RELEASE VALVE VAULT

NOT TO SCALE

Howey-in-the-Hills Standard Details | DATE: FEB 2022 | DETAIL PW-13

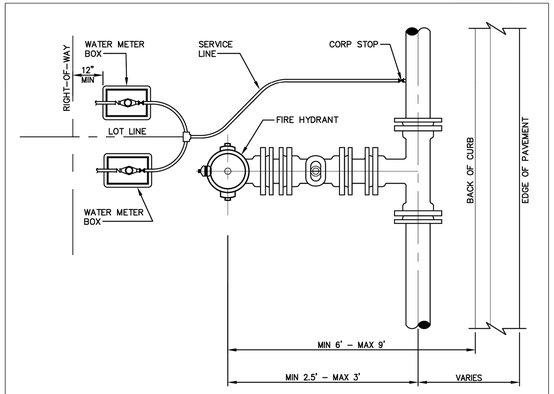

NOTES:

1. ALL METER BOXES TO BE LOCATED INSIDE ROAD R/W LINE
2. DETAIL TO BE USED WHERE FIRE HYDRANTS AND WATER SERVICES ARE LOCATED ON PLANS AND CONFLICT APPEARS APPARENT.

TYPICAL WATER SERVICE AND HYDRANT LOCATION

NOT TO SCALE

Howey-in-the-Hills Standard Details | DATE: FEB 2022 | DETAIL PW-14

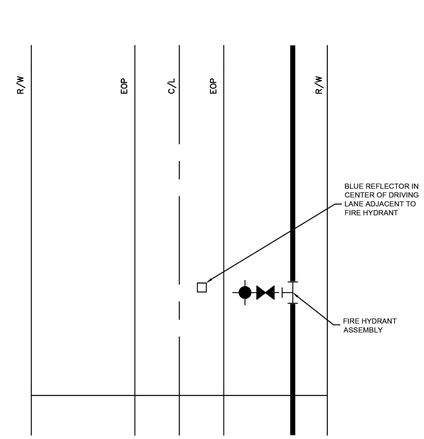

FIRE HYDRANT REFLECTOR

NOT TO SCALE

Howey-in-the-Hills Standard Details | DATE: FEB 2022 | DETAIL PW-15

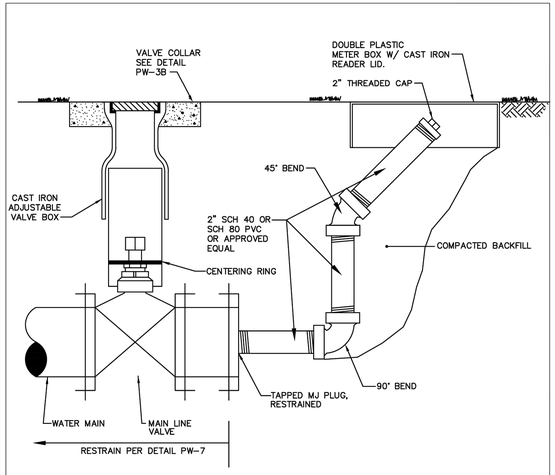

BLOWOFF VALVE

NOT TO SCALE

Howey-in-the-Hills Standard Details | DATE: FEB 2022 | DETAIL PW-16

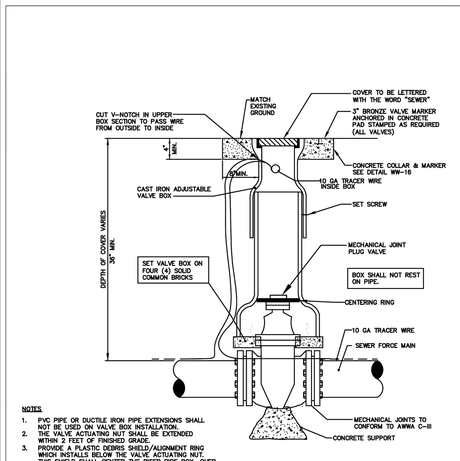

NOTES

1. PVC PIPE OR DUCTILE IRON PIPE EXTENSIONS SHALL NOT BE USED ON VALVE BOX INSTALLATION.
2. THE VALVE ACTUATING NUT SHALL BE EXTENDED WITHIN 2 FEET OF FINISHED GRADE.
3. PROVIDE A PLASTIC DEBRIS SHIELD/ALIGNMENT RING WHICH INSTALLS BELOW THE VALVE ACTUATING NUT. THIS SHIELD SHALL CENTER THE RISER PIPE BOX OVER THE ACTUATING NUT AND MINIMIZE INFILTRATION.
4. FOR NEW CONSTRUCTION, THE VALVE BOX SHALL BE ADJUSTED TO MIDRANGE TO ALLOW FOR FUTURE BOX ADJUSTMENTS.
5. VALVE BOX SHALL BE A TWO PIECE SCREW TYPE.

PLUG VALVE AND BOX

NOT TO SCALE

Howey-in-the-Hills Standard Details | DATE: FEB 2022 | DETAIL WW-13

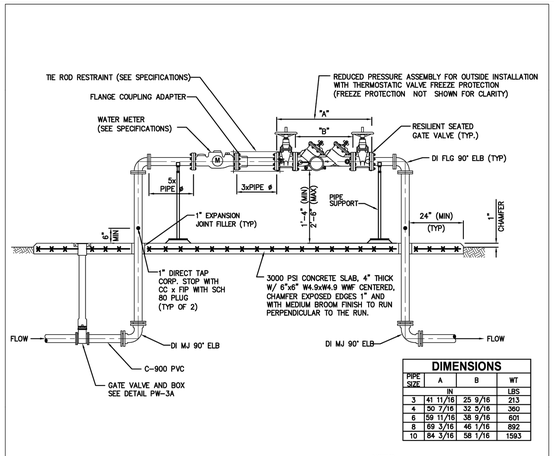

DIMENSIONS			
PIPE SIZE	A	B	WT
	IN		LBS
3	41 11/16	25 9/16	213
4	50 7/16	32 5/16	360
6	59 11/16	38 9/16	601
8	69 3/16	46 1/16	892
10	84 3/16	58 1/16	1593

NOTES:
1. ALL ABOVE GROUND PIPE TO BE PAINTED WITH 2 COATS OF APPROVED BLUE PAINT.

REDUCED PRESSURE BACKFLOW PREVENTER W/ WATER METER DETAIL

NOT TO SCALE

Howey-in-the-Hills Standard Details | DATE: FEB 2022 | DETAIL PW-23

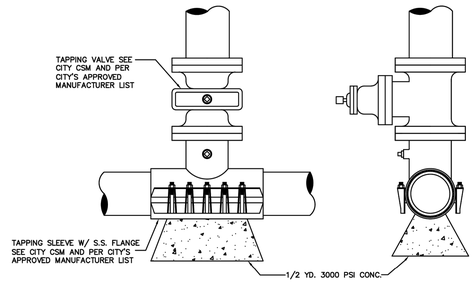

WET TAP SLEEVE AND TAPPING VALVE

NOT TO SCALE

Howey-in-the-Hills Standard Details | DATE: FEB 2022 | DETAIL PW-17

PAINTING

1. APPLY TWO COATS OF OSHA SAFETY INDUSTRIAL RED PAINT TO HYDRANT BARREL.
2. APPLY TWO COATS OF OSHA SAFETY INDUSTRIAL ENAMEL PAINT TO THE BONNET AND NOZZLE CAPS. THE UTILITY DEPARTMENT INSPECTOR WILL DETERMINE THE COLOR TO PAINT THE HYDRANT BONNET AND NOZZLE CAPS BY FLOW TESTING HYDRANT.

BLUE	1500 GPM OR MORE (SHERWIN WILLIAMS #SW4086)
GREEN	1000 GPM TO 1499 GPM (SHERWIN WILLIAMS #B54614)
ORANGE	500 GPM TO 999 GPM (SHERWIN WILLIAMS #B54E39)
RED	499 GPM OR LESS (SHERWIN WILLIAMS #B54R38)
RED	HYDRANT BARREL (SHERWIN WILLIAMS #B54R38)

SPECIFICATIONS

1. AWWA SPECIFICATIONS C-502
2. TWO 2-1/2" HOSE NOZZLE DISCHARGE
3. ONE 4-1/2" PUMPER NOZZLE DISCHARGE
4. ONE 1-1/2" OPERATING NUT, LEFT
5. ALL HYDRANTS SHALL BE EQUIPPED WITH FITTINGS TO ALLOW FOR ELEVATION ADJUSTMENTS.
6. 5¼" MAIN VALVE OPENING
7. RESTRAINED JOINTS OR ALL THREADED ROD REQUIRED TO SECURE PIPE, RISER AND VALVE IN THE FIRE HYDRANT ASSEMBLY TO THE MAIN

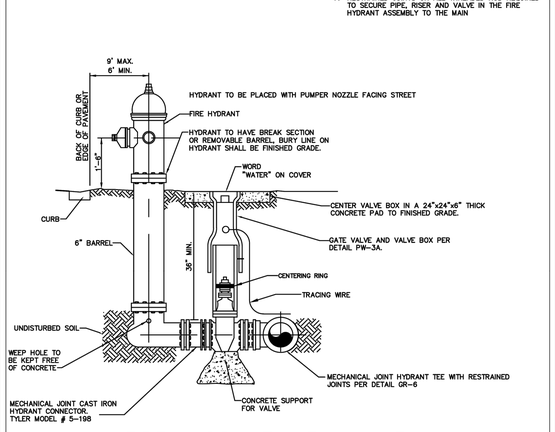

FIRE HYDRANT WITH VALVE

NOT TO SCALE
(STANDARD FIRE HYDRANT ASSEMBLY)

Howey-in-the-Hills Standard Details | DATE: FEB 2022 | DETAIL PW-18

MADDEN
MOORHEAD & STOKES, LLC
CIVIL ENGINEERS
431 E. Horatio Avenue
Suite 260
Maitland, Florida 32751
(407) 629-8330
CA# 0007723

CITY DETAILS

FOR

LAKE HILLS SHOPPING CENTER

TOWN OF HOWEY IN THE HILLS FLORIDA

WINDCREST DEVELOPMENT GROUP, INC.
605 E. ROBINSON ST. SUITE 340
ORLANDO, FL 32801
407-219-3540

DATE	REVISIONS
1	
2	
3	
4	
5	
6	
7	
8	
9	
10	
11	

BENJAMIN S. BECKHAM LICENSE NO. 79452 STATE OF FLORIDA PROFESSIONAL ENGINEER

This item has been digitally signed and sealed by Benjamin S. Beckham, PE on the date adjacent to the seal.

Printed copies of this document are not considered signed and sealed and the signature must be verified on any electronic copies.

ENGINEER OF RECORD

JOB #	22041
DATE:	08/06/24
DATUM:	NAVD 88
DESIGNED BY:	KGS
DRAWN BY:	JAS
APPROVED BY:	BSB

C912

THESE DOCUMENTS AND THEIR CONTENTS ARE THE PROPERTY OF MADDEN, MOORHEAD & STOKES, LLC AND ARE INTENDED FOR USE ONLY FOR THE SPECIFIC PROJECT AND PURPOSE FOR WHICH THEY WERE PREPARED. THEY ARE NOT TO BE USED FOR ANY OTHER PROJECT OR PURPOSE WITHOUT THE EXPRESS WRITTEN CONSENT OF MADDEN, MOORHEAD & STOKES, LLC. ANY UNAUTHORIZED USE, REPRODUCTION OR MODIFICATION OF THESE DOCUMENTS IS PROHIBITED AND MAY RESULT IN LEGAL ACTION.

H:\Data\22M0541\Lake Hams Public\Eng\Final\22041-C910-CITY DETAILS.dwg January 10, 2025 2:37 PM

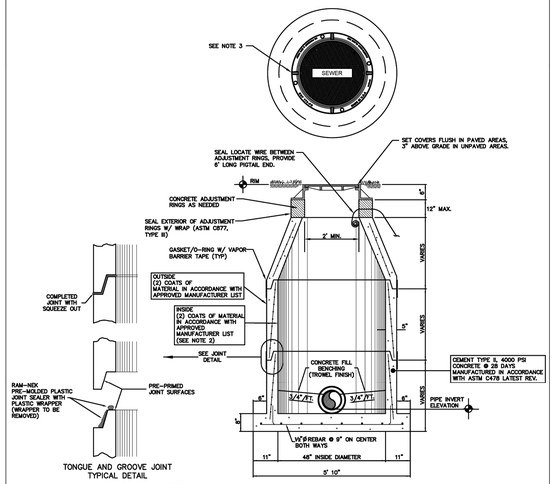

NOTES:

1. ALTERNATE-PRECAST MANHOLE TOPS MUST BE APPROVED IN ADVANCE.
2. LINER (100 MILS DFT) SHALL BE USED WHERE SHOWN ON DRAWINGS AND/OR REQUIRED BY THE CITY.
3. MANHOLE LID TO BE CENTERED OVER EFFLUENT PIPE.
4. INSTALL ONE CONTINUOUS PIECE OF RAM-NEK AROUND ENTIRE MATING SURFACE BETWEEN ADJUSTMENT RINGS AND MANHOLE FRAME.

SANITARY PRECAST MANHOLE

NOT TO SCALE

Howey-in-the-Hills Standard Details	DATE: FEB 2022
	DETAIL WW-1

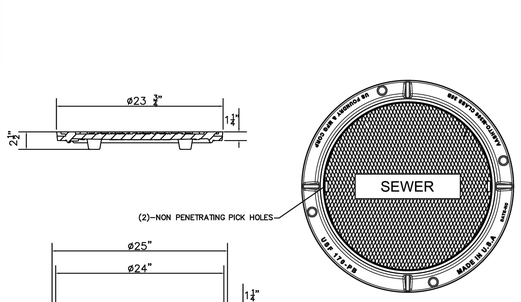

*MODEL USF 170-PB RING AND CE-PB COVER
RING NO. 8021468
COVER NO. 8017774
MATERIAL AASHTO M306 GRAY CAST IRON CLASS 35B

SANITARY MANHOLE COVER

NOT TO SCALE

Howey-in-the-Hills Standard Details	DATE: FEB 2022
	DETAIL WW-2

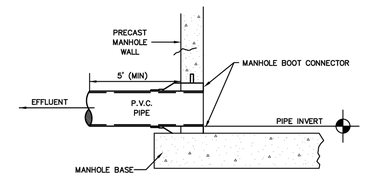

EFFLUENT CONNECTION

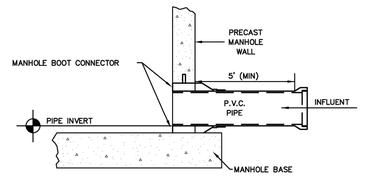

INFLUENT CONNECTION

PIPE CONNECTION TO PRECAST SANITARY MANHOLE

NOT TO SCALE

Howey-in-the-Hills Standard Details	DATE: FEB 2022
	DETAIL WW-3

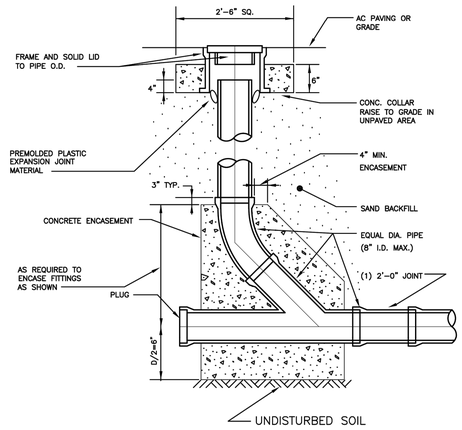

GRAVITY CLEAN-OUT

NOT TO SCALE

Howey-in-the-Hills Standard Details	DATE: FEB 2022
	DETAIL WW-9

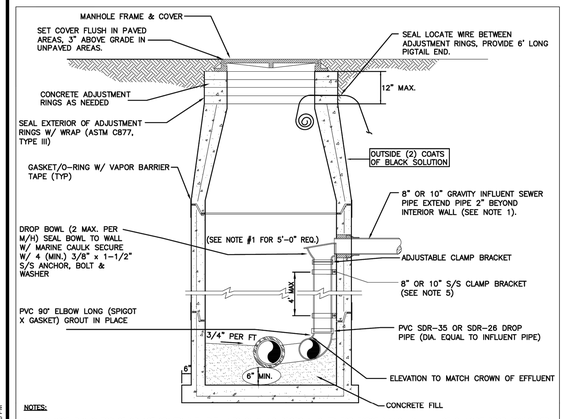

NOTES:

1. THIS ASSEMBLY IS FOR 8" OR 10" GRAVITY INFLUENT LINES ONLY. NO DROPS ALLOWED FOR FORCE MAINS. MAXIMUM OF 2 INSIDE DROP BOWLS PER MANHOLE. A 5'-0" DIA. MANHOLE (6" THICK WALLS) IS REQUIRED. THE INSIDE DROP FOR 8" HIGH-LINE SHALL BE CONSTRUCTED SIMILAR TO ABOVE.
2. PRECAST MANHOLE SECTIONS TO BE MANUFACTURED IN ACCORDANCE WITH THE LATEST EDITIONS OF A.S.T.M. C-478 WITH 4000 LB. CONC., TYPE II CEMENT. ALL LIFTING HOLES AND OUTSIDE INSERTS SHALL BE FILLED WITH NON-SHRINK GROUT AND COATED WITH BITUMINOUS WATERPROOFING MATERIAL.
3. THE INTERIOR OF MANHOLE AND THE INTERIOR OF ADJUSTMENT RINGS SHALL BE LINED (150 MILS DFT) AS INDICATED ON THE DRAWINGS AND/OR REQUIRED BY THE CITY.
4. THE DROP BOWL ASSEMBLY SHALL BE INSTALLED PRIOR TO APPLICATION OF SPECIALTY LINING MATERIAL.
5. ADJUSTABLE CLAMPING BRACKET (MIN. 2 PER DROP BOWL ASSY). 1-1/2" WIDE, 11 GA. W/ 3/8" DIA. 18-8 PINCH BOLTS AND NUTS. SECURE TO M/H WALL WITH (2) 3/8" X 1" BOLT, ANCHOR & WASHER PER BRACKET ASSY. ALL 316 STAINLESS STEEL MATERIALS.
6. INSTALL ONE CONTINUOUS PIECE OF RAM-NEX AROUND ENTIRE MATING SURFACE BETWEEN ADJUSTMENT RINGS AND MANHOLE FRAME.
7. MANHOLE LID SHALL BE CENTERED OVER DROP BOWL.

INSIDE DROP STANDARD PRECAST MANHOLE

NOT TO SCALE

Howey-in-the-Hills Standard Details	DATE: FEB 2022
	DETAIL WW-5

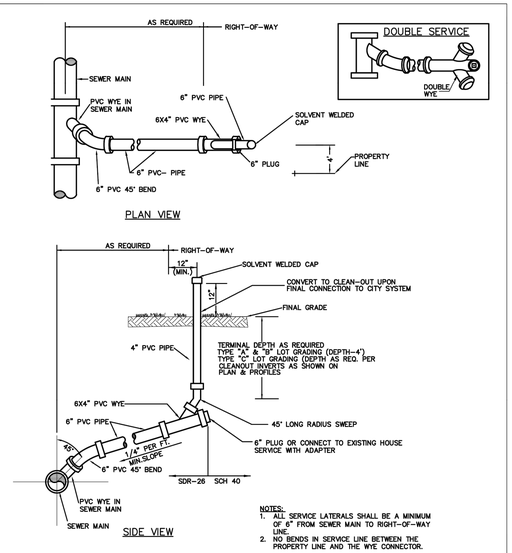

NOTES:

1. ALL SERVICE LATERALS SHALL BE A MINIMUM OF 6" FROM SEWER MAIN TO RIGHT-OF-WAY LINE.
2. NO BENDS IN SERVICE LINE BETWEEN THE PROPERTY LINE AND THE WYE CONNECTOR.

SANITARY SEWER SERVICE

PVC SEWER SERVICE - NOT TO SCALE

Howey-in-the-Hills Standard Details	DATE: FEB 2022
	DETAIL WW-6

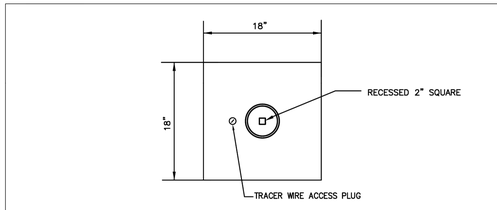

PLAN VIEW

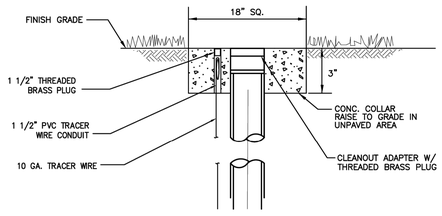

SIDE VIEW

SERVICE CLEANOUT

NOT TO SCALE

Howey-in-the-Hills Standard Details	DATE: FEB 2022
	DETAIL WW-7

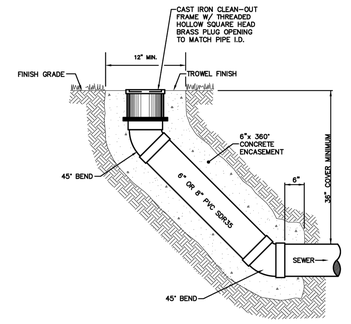

TRUNK LINE CLEAN-OUT

NOT TO SCALE

Howey-in-the-Hills Standard Details	DATE: FEB 2022
	DETAIL WW-8

MADDEN
MOORHEAD & STOKES, LLC
CIVIL ENGINEERS
431 E. Horatio Avenue
Suite 260
Maitland, Florida 32751
(407) 629-8330
CA# 0007723

CITY DETAILS
FOR
LAKE HILLS SHOPPING CENTER
TOWN OF HOWEY IN THE HILLS FLORIDA

THESE DRAWINGS AND SPECIFICATIONS ARE AND SHALL REMAIN THE PROPERTY OF MADDEN MOORHEAD & STOKES, LLC AND THE UNAUTHORIZED USE OF THESE PLANS WITHOUT THE WRITTEN PERMISSION OF MADDEN MOORHEAD & STOKES, LLC IS PROHIBITED. © COPYRIGHT 2024 MADDEN MOORHEAD & STOKES, LLC

WINDCREST DEVELOPMENT GROUP, INC.
605 E. ROBINSON ST. SUITE 340
ORLANDO, FL 32801
407-219-3540

DATE	REVISIONS
	1
	2
	3
	4
	5
	6
	7
	8
	9
	10
	11

BENJAMIN S. BECKHAM
LICENSE NO. 79452
STATE OF FLORIDA
PROFESSIONAL ENGINEER

This item has been digitally signed and sealed by Benjamin S. Beckham, PE on the date adjacent to the seal.

Printed copies of this document are not considered signed and sealed and the signature must be verified on any electronic copies.

ENGINEER OF RECORD

JOB # 22041
DATE: 08/06/24
DATUM: NAVD 88
DESIGNED BY: KGS
DRAWN BY: JAS
APPROVED BY: BSB

C913

H:\Data\22\MS\04\Lake Hams Public\Eng\Final\22041-C913(CITY DETAILS).dwg January 10, 2025 2:38 PM

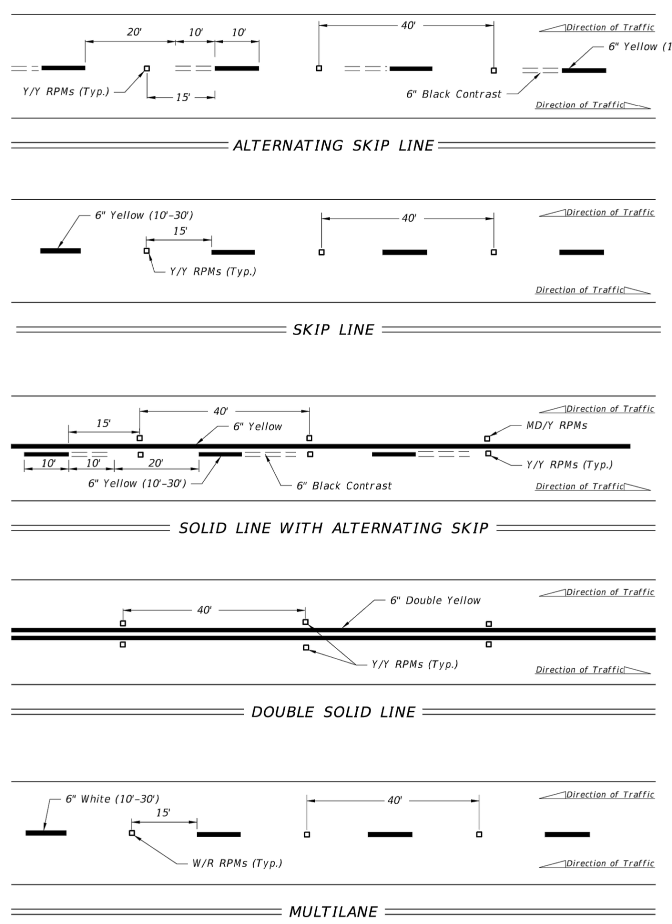

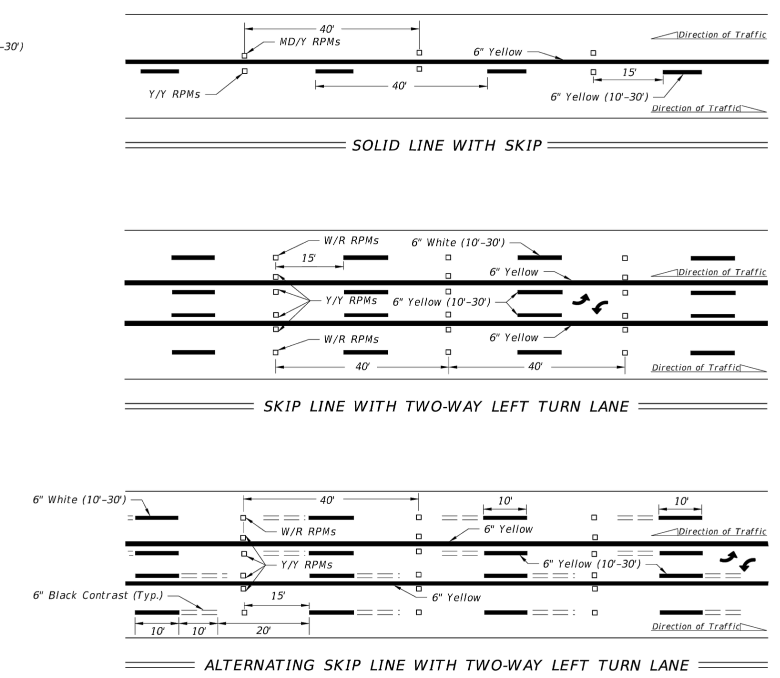

NOTES:

1. Offset all RPMs 1" from solid longitudinal lines unless otherwise noted or shown.
2. Spacing may be reduced for sharp curves if required.
3. For placement of RPMs on ramps, see Index 711-003.
4. Make the traffic face of the RPM the same color as the pavement marking that it is supplementing.

LEGEND:

B/C = BACK OF CURB
EOP = EDGE OF PAVEMENT
RPM = RAISED PAVEMENT MARKER
W/R = WHITE/RED RPM
Y/Y = YELLOW/YELLOW RPM
Y/R = YELLOW/RED RPM
MD/Y = MONO-DIRECTIONAL YELLOW RPM

LAST REVISION 11/01/18	REVISION	DESCRIPTION:	FDOT FY 2023-24 STANDARD PLANS	TYPICAL PLACEMENT OF RAISED PAVEMENT MARKERS	INDEX 706-001	SHEET 1 of 6

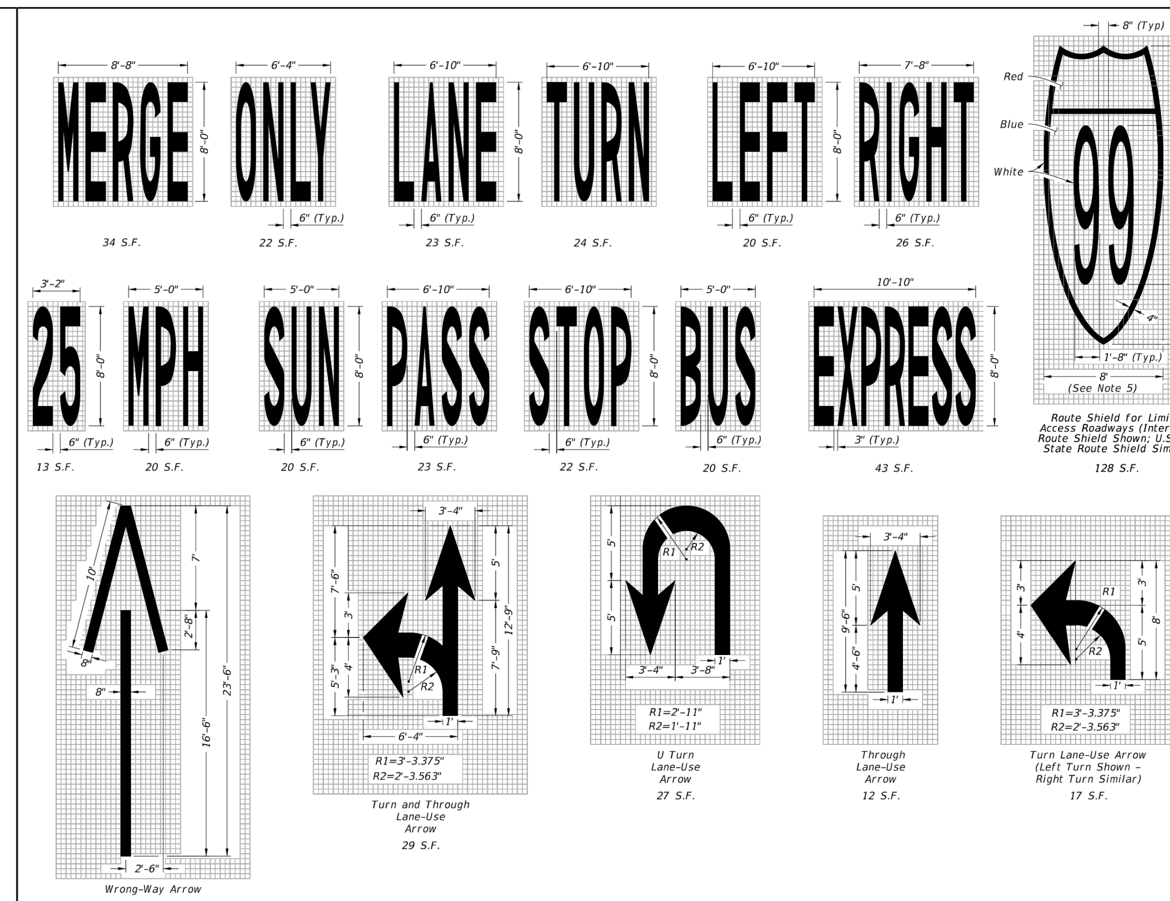

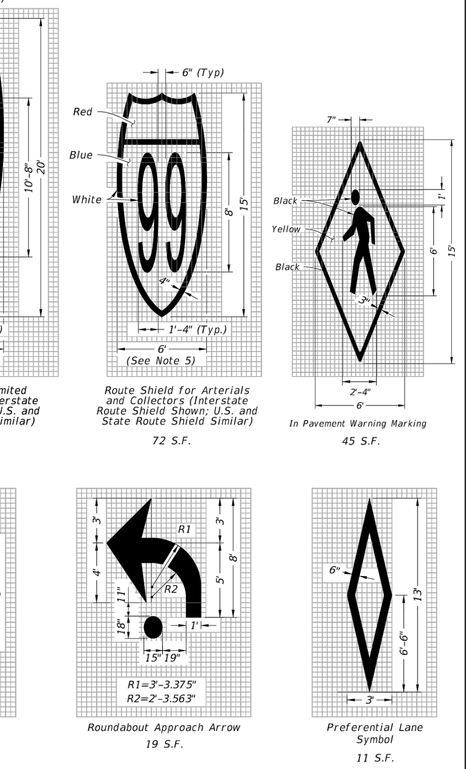

PAVEMENT MESSAGES NOTES:

1. Place all pavement messages 25' back from the stop line.
2. Dimensions are within 1" ±.
3. All grids are 4" x 4".
4. All pavement messages must be white except Route Shields and In Pavement Warning Markings.
5. Increase width of route shield for routes with three digits.

PAVEMENT MESSAGE AND ARROW DETAILS

LAST REVISION 11/01/21	REVISION	DESCRIPTION:	FDOT FY 2025-26 STANDARD PLANS	PAVEMENT MARKINGS	INDEX 711-001	SHEET 1 of 13

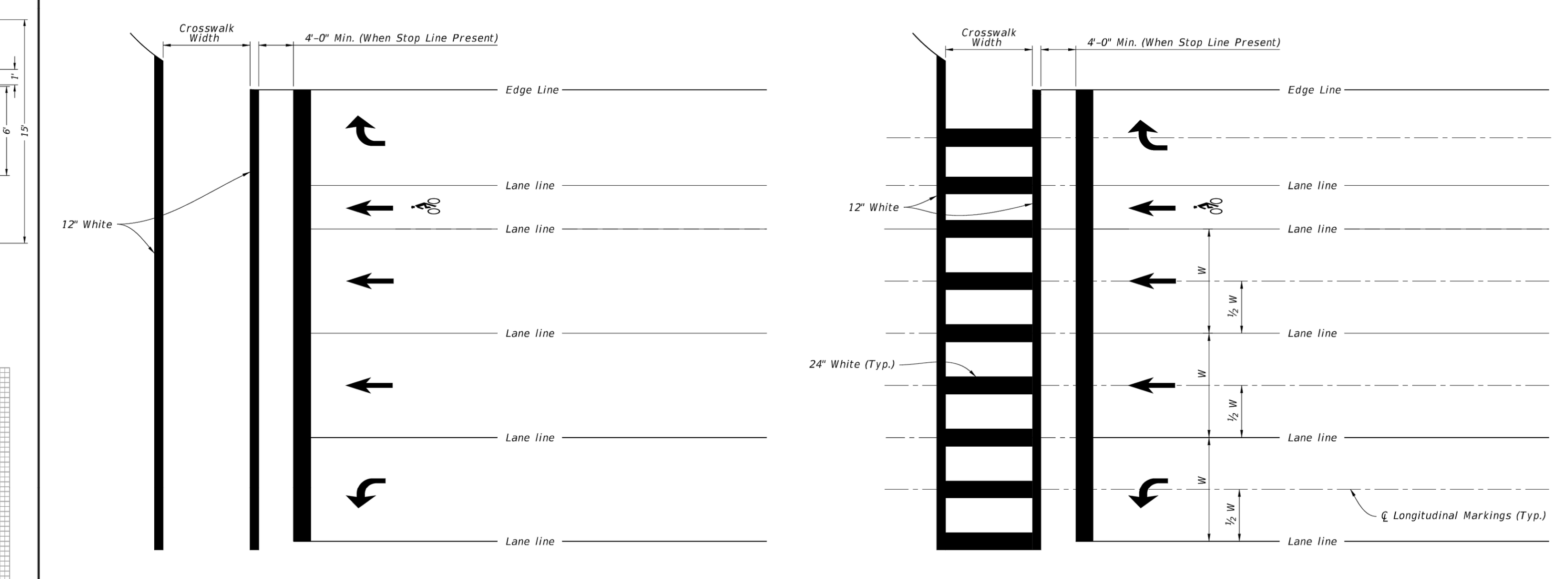

STANDARD CROSSWALK DETAILS

SPECIAL EMPHASIS CROSSWALK DETAILS

NOTES:

1. For crosswalk width, exceed width of the adjacent sidewalk, but do not make width less than 6' for intersection crosswalks and 10' for midblock crosswalks. Measure width from the inside of the transverse crosswalk markings.
2. When the Special Emphasis Crosswalk is not perpendicular to the lane lines, make the longitudinal markings parallel to the lane lines.
3. Refer to Index 522-002 when Curb Ramps are present.

LAST REVISION 11/01/21	REVISION	DESCRIPTION:	FDOT FY 2025-26 STANDARD PLANS	PAVEMENT MARKINGS	INDEX 711-001	SHEET 9 of 13

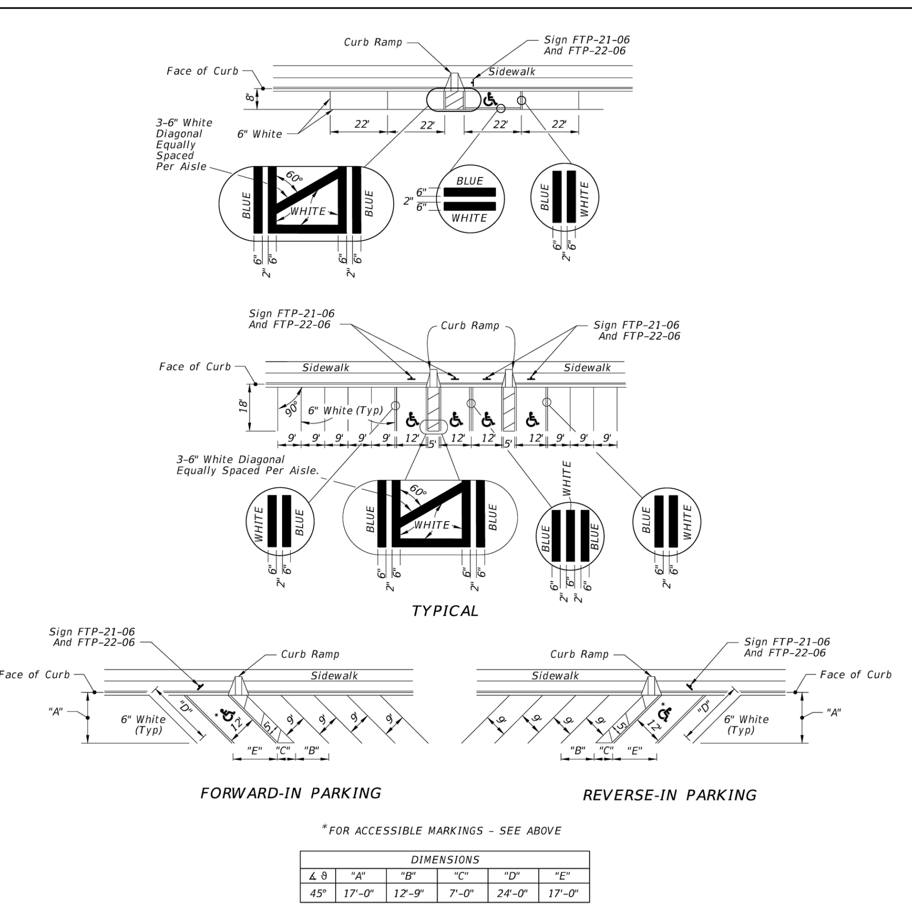

*FOR ACCESSIBLE MARKINGS - SEE ABOVE

DIMENSIONS					
∡ θ	"A"	"B"	"C"	"D"	"E"
45°	17'-0"	12'-9"	7'-0"	24'-0"	17'-0"

PAVEMENT MARKING FOR PARKING

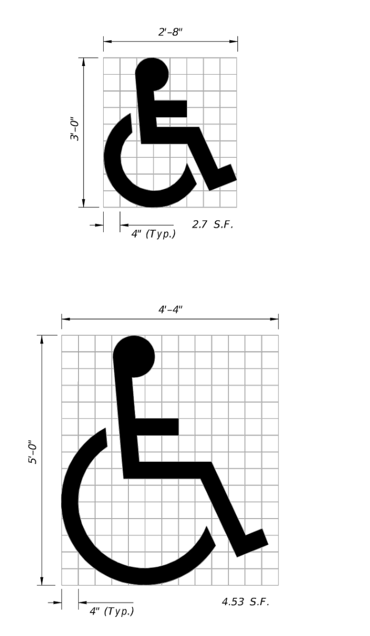

UNIVERSAL SYMBOL OF ACCESSIBILITY

NOTES:

1. Dimensions are to the centerline of markings.
2. An Access Aisle is required for each accessible space when angle parking is used.
3. Criteria for pavement markings only, not public sidewalk curb ramp locations. For ramp locations refer to plans.
4. Mount FTP-22-06 sign below the FTP-21-06 sign.
5. Use of the pavement symbol in accessible parking spaces is optional. When pavement symbol is used, the symbol is either 3'-0" or 5'-0" high and white in color.

LAST REVISION 11/01/21	REVISION	DESCRIPTION:	FDOT FY 2025-26 STANDARD PLANS	PAVEMENT MARKINGS	INDEX 711-001	SHEET 11 of 13

GENERAL NOTES:

1. Cross Slopes and Grades:
   - A. Sidewalk, ramp, and landing slopes (i.e. 0.02, 0.05, and 1:12) shown in this Index are maximums. With approval of the Engineer, provide the minimum feasible slope where the requirements cannot be met.
   - B. Landings must have cross-slopes less than or equal to 0.02 in any direction.
   - C. Maintain a single longitudinal slope along each side of the curb ramp. Ramp slopes are not required to exceed 15 feet in length.
   - D. Joints permitted at the location of Slope Breaks. Otherwise locate joints in accordance with Index 522-001. No joints are permitted within the ramp portion of the Curb Ramp.
2. Curb, Curb and Gutter and/or Sidewalk:
   - A. Refer to Index 522-001 for concrete thickness and sidewalk details.
   - B. Remove any existing curb, curb and gutter, or sidewalk to the nearest joint beyond the curb transition or to the extent that no remaining section is less than 5 feet long.
   - C. Width of Curb Ramp is 4'-0" minimum. Match sidewalk or Shared Use Path width as shown in the Plans.
3. Curb Ramp Alpha-Identification:
   - A. Sidewalk curb ramp alpha-identifications (e.g. CR-A) are provided for reference purposes in the Plans.
   - B. Alpha-identifications CR-I and CR-J are intentionally omitted.
4. Detectable Warnings:
   - A. Install detectable warnings in accordance with Specification 527.
   - B. Place detectable warnings across the full width of the ramp or landing, to a minimum depth of 2 feet measured perpendicular to the curb line and no greater than 5 feet from the back of the curb or edge of pavement.
   - C. If detectable warnings are shown in the Plans on slopes greater than 5%, align the truncated domes with the centerline of the ramp; otherwise, the truncated domes are not required to be aligned.

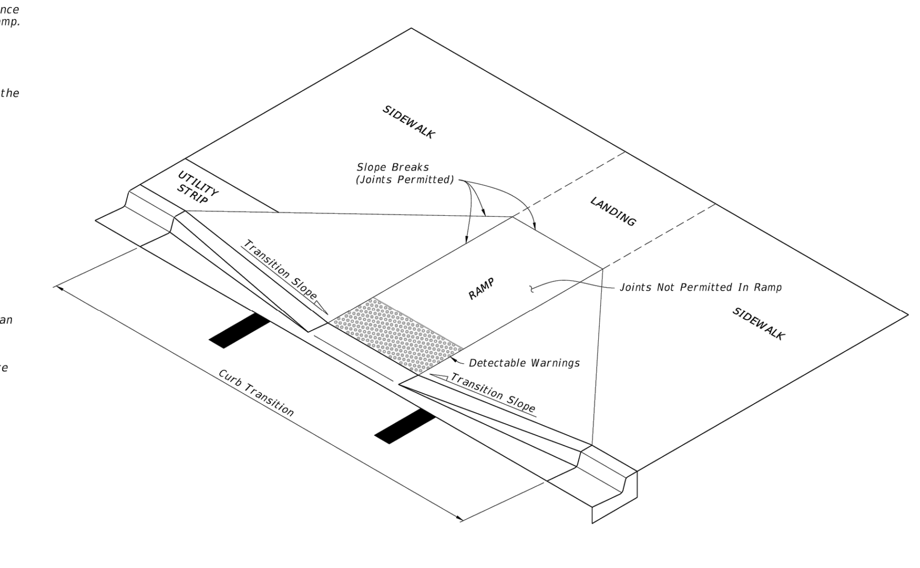

CURB RAMP NOMENCLATURE

LAST REVISION 11/01/21	REVISION	DESCRIPTION:	FDOT FY 2025-26 STANDARD PLANS	DETECTABLE WARNINGS AND SIDEWALK CURB RAMPS	INDEX 522-002	SHEET 1 of 7

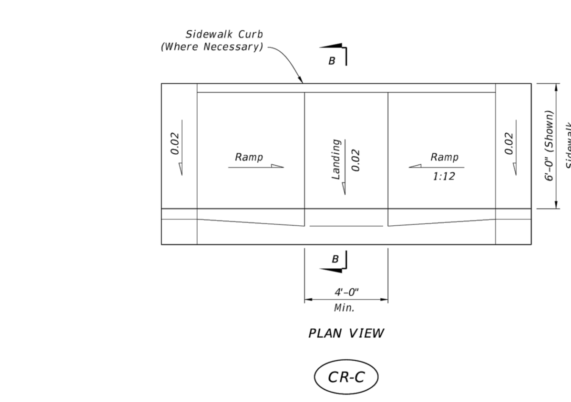

PLAN VIEW

CR-C

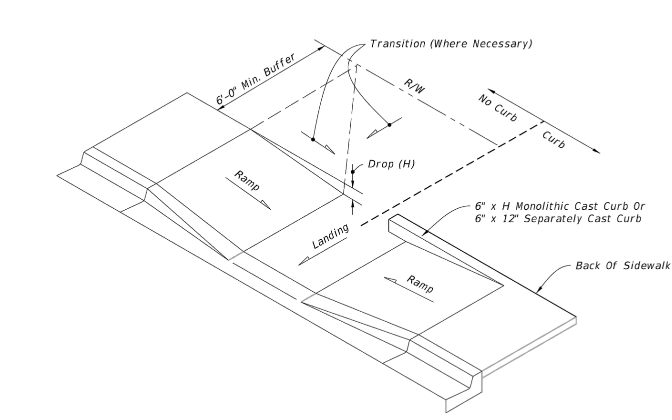

CONSTRUCTION OF SIDEWALK CURB IN CUT SECTIONS

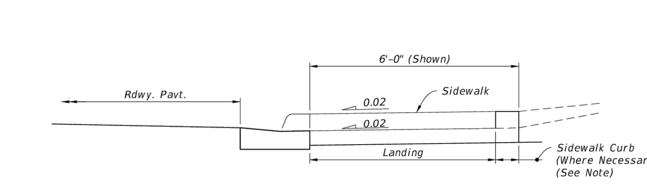

NOTE: For additional information on sidewalk curb construction, see SIDEWALK CURB OPTIONS details.

SECTION B-B

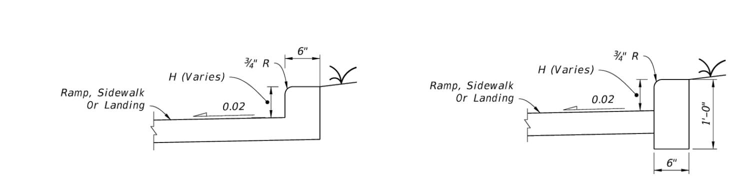

MONOLITHIC CAST CURB

SEPARATELY CAST CURB

SIDEWALK CURB OPTIONS

SIDEWALK CURB RAMPS CR-C AND SIDEWALK CURB

LAST REVISION 11/01/20	REVISION	DESCRIPTION:	FDOT FY 2025-26 STANDARD PLANS	DETECTABLE WARNINGS AND SIDEWALK CURB RAMPS	INDEX 522-002	SHEET 3 of 7

MADDEN
MOORHEAD & STOKES, LLC
CIVIL ENGINEERS
431 E. Horatio Avenue
Suite 260
Maitland, Florida 32751
(407) 629-8330
CA# 0007723

FDOT DETAILS

FOR

LAKE HILLS SHOPPING CENTER

TOWN OF HOWEY IN THE HILLS

FLORIDA

WINDCREST DEVELOPMENT GROUP, INC.
605 E. ROBINSON ST. SUITE 340
ORLANDO, FL 32801
407-219-3540

	DATE	REVISIONS
1		
2		
3		
4		
5		
6		
7		
8		
9		
10		
11		

BENJAMIN S. BECKHAM
LICENSE
NO. 79452
STATE OF FLORIDA
PROFESSIONAL ENGINEER

This item has been digitally signed and sealed by Benjamin S. Beckham, PE on the date adjacent to the seal.

Printed copies of this document are not considered signed and sealed and the signature must be verified on any electronic copies.

ENGINEER OF RECORD

JOB # 22041
DATE: 08/06/24
DATUM: NAVD 88
DESIGNED BY: KGS
DRAWN BY: JAS
APPROVED BY: BSB

C920

THESE DOCUMENTS AND THEIR CONTENTS ARE THE PROPERTY OF MADDEN, MOORHEAD & STOKES, LLC. AND ARE ISSUED ONLY FOR THE SPECIFIC PROJECT NOTED ON THESE DRAWINGS. ANY REPRODUCTIONS, REVISIONS OR MODIFICATIONS OF THESE DOCUMENTS WITHOUT THE EXPRESSED WRITTEN CONSENT OF MADDEN, MOORHEAD & STOKES, LLC. IS PROHIBITED BY LAW.

H:\Data\22MMS0410-Lake Harris Publix\Eng\Final\22041-C920-FDOT DETAILS.dwg January 10, 2025 2:38 PM