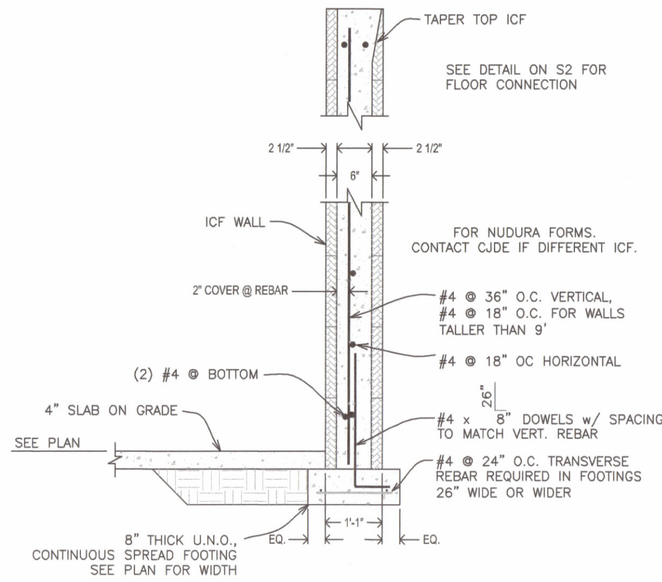

ICF1 ICF WALL WITH SLAB
NOT TO SCALE

STEM WALL REINFORCEMENT SCHEDULE			
MIN."H"	MAX."H"	"C" BARS	"B" BARS
2'-8"	3'-11"	2 – #4 TOP & BOTTOM	#4 @ 64"
3'-11"	5'-11"	2 – #4 T & B	#4 @ 36"
5'-11"	7'-11"	2 – #4 T & B PLUS #4 @ 36" INT	#4 @ 36"
7'-11"	8'-11"	2 – #4 T & B PLUS #4 @ 18" INT	#4 @ 18"
8'-11"	9'-11"	2 – #4 T & B PLUS #4 @ 18" INT	#4 @ 18"
9'-11"	10'-11"	2 – #4 T & B PLUS #4 @ 18" INT	#4 @ 18"
"T & B" DENOTES TOP AND BOTTOM HORIZONTAL BARS			
"INT" DENOTES INTERMEDIATE HORIZONTAL BARS EVENLY SPACED BETWEEN TOP AND BOTTOM BARS			
#5 GRADE 40 BARS MAY BE SUBSTITUTED FOR #4 GRADE 60			

10' MAX. HEIGHT EXCEPT AS REQUIRED FOR FROST PROTECTION

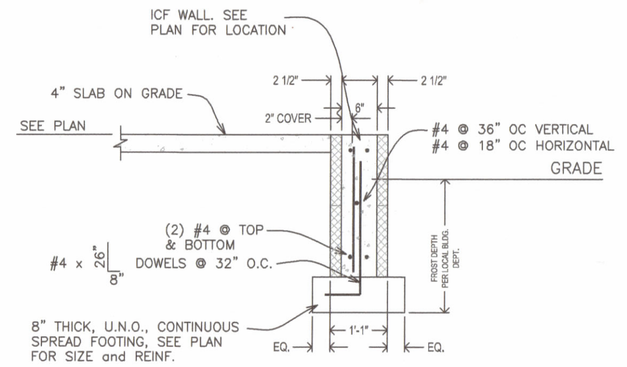

ICF2 ICF FROSTWALL WITH SLAB
NOT TO SCALE

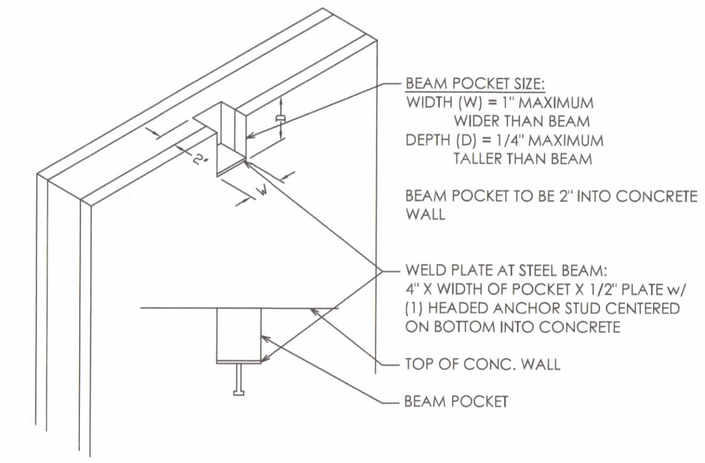

FW12B ICF BEAM POCKET DETAIL w/ WELD PLATE
SCALE AS NOTED

1. WRAP WITH CORRUGATED OR 3/8" CARPET PAD TO ISOLATE COLUMN FROM FLOOR SLAB.

2. IF SLAB IS POURED BEFORE COLUMN IS PLACED, PROVIDE A 1'-0" SAQUARE CAP FLUSH WITH THE FINISHED FLOOR SURROUNDED WITH 1/2" THICK EXPANSION JOINT MATERIAL (EITHER CELLULOSE OR ASPHALT- IMPREGNATED CELOTEX ARE APPROVED)

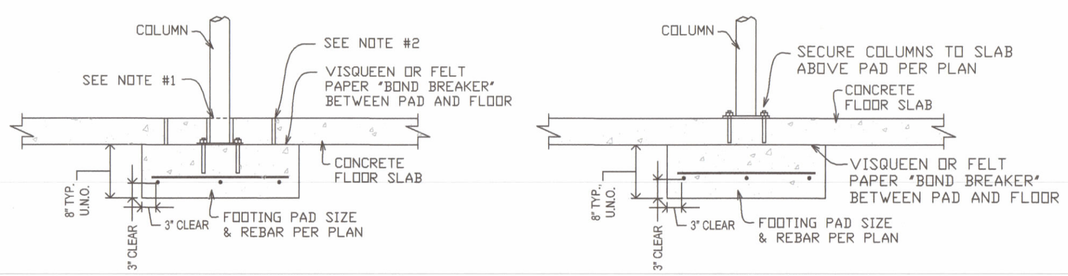

PD1 INTERIOR FOOTING DETAIL
NOT TO SCALE

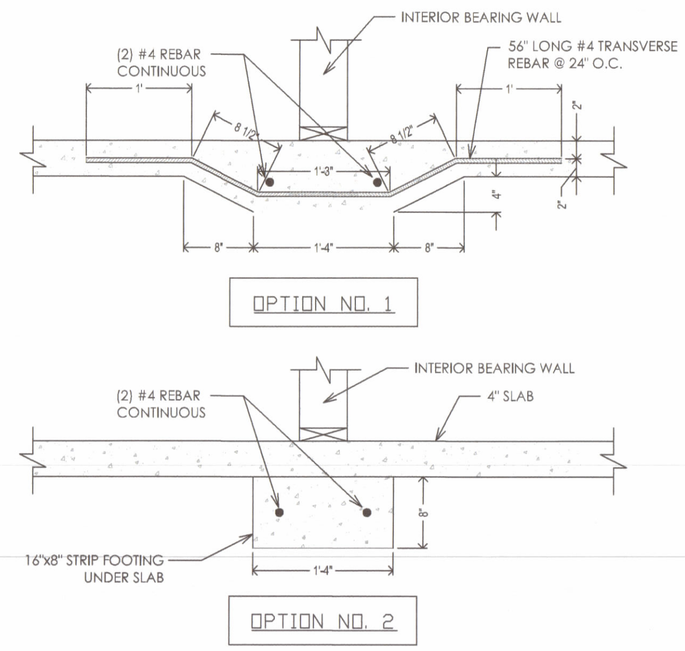

SL2 THICKENED SLAB DETAIL
NOT TO SCALE

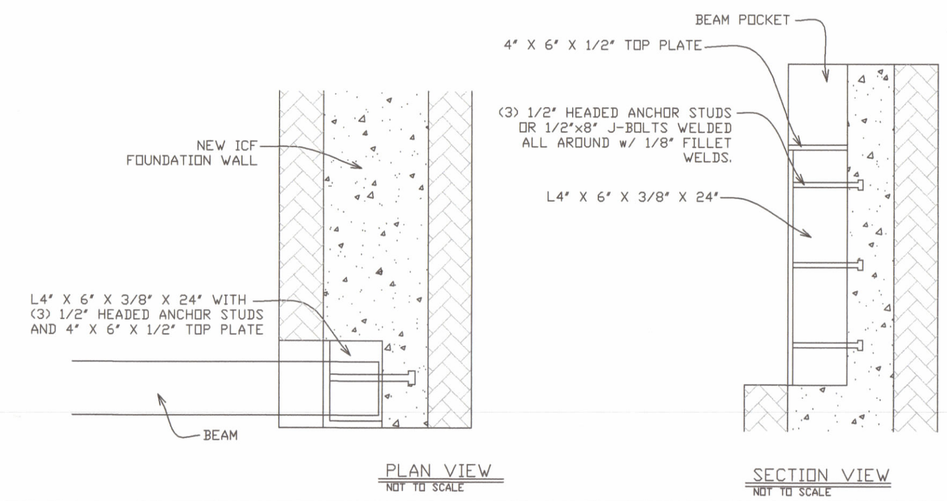

FW3 CORNER BEAM POCKET DETAIL
NOT TO SCALE

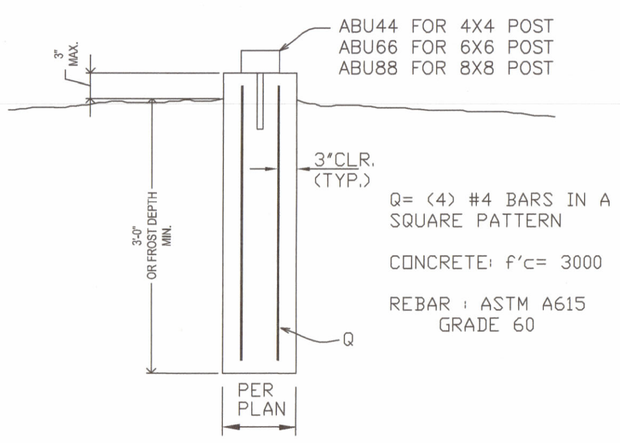

PR5 DRILLED PIER DETAIL
NOT TO SCALE

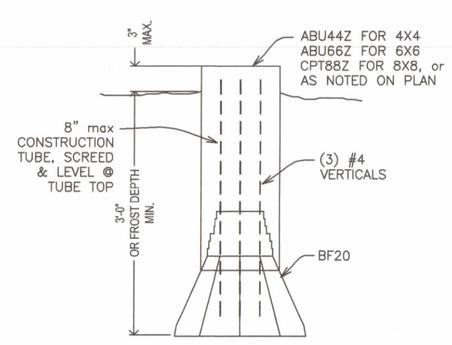

BF20 20" BIGFOOT
NOT TO SCALE

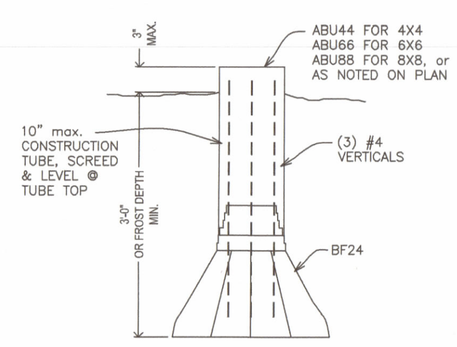

BF24 24" BIGFOOT
NOT TO SCALE

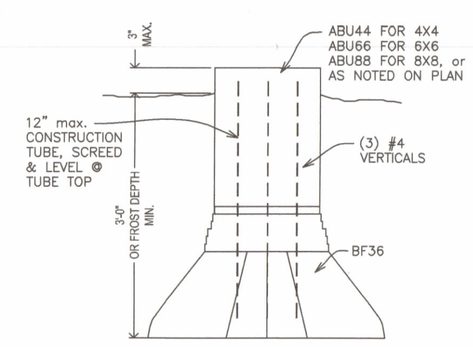

BF36 36" BIGFOOT
NOT TO SCALE

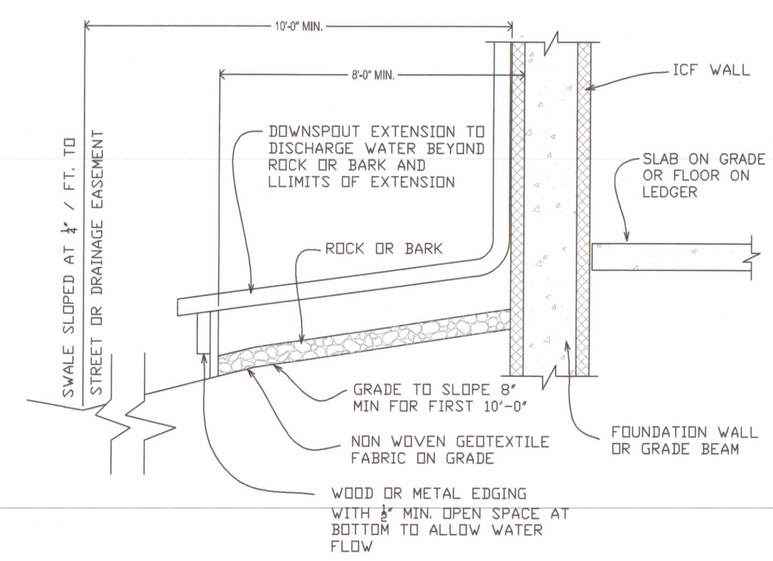

LS7 LANDSCAPE SECTION
NOT TO SCALE

S4 STRUCTURAL DETAILS

NOT TO SCALE

PHI-D&E INC. dba
crown jade
DESIGN & ENGINEERING
ENGINEERED FOR THE WAY YOU BUILD...
...DESIGNED FOR THE WAY YOU LIVE
PO BOX 336702
GREELEY, CO 80633
(970) 472-2394; (303) 358-2452
www.crownjade.com

HEGGEN RESIDENCE

NEW QUONSET HOME
AT TBD VEGA RD.
HUERFANO COUNTY

CLIENT:
DAVID AND DEANNA HEGGEN
516 MEADOW KNOLL CT.
KELLER, TX
PHONE: 817-675-2477

DRAFTED BY:
EVAN CHEADLE
ENGINEERING REVIEW:
MARK BENJAMIN / DOUG INGERSOLL / SETH HOOVER
ENGINEER OF RECORD:
MARK BENJAMIN, P.E.

© PHI-D&E Inc. dba Crown Jade Design and Engineering

SCALE:
1/4" = 1' U.N.O.
SHEET SIZE: D (24X36)

STRUCTURAL DETAILS

FINAL
DATE
10/15/2024

FINAL

10/15/2024
COLORADO REGISTERED PROFESSIONAL ENGINEER MARK BENJAMIN 38390
Mark Benjamin
Digitally signed by Mark Benjamin
Date: 2024.10.15 12:31:54 -06'00'
COPIES OF THE ELECTRONICALLY SIGNED STAMP ARE INVALID

ENGINEERS JOB #
HGND1-24179

SHEET
S4