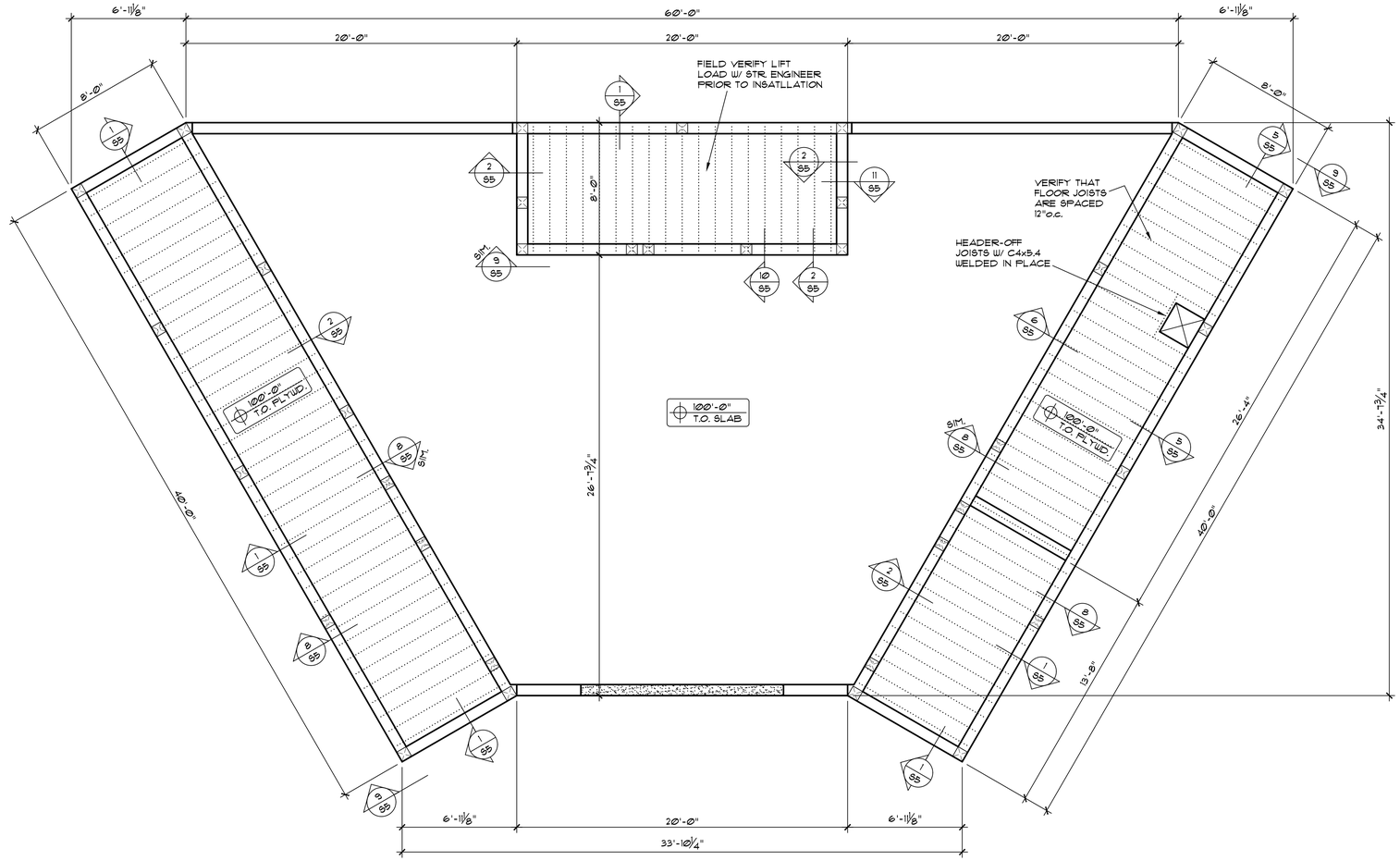

MAIN LEVEL FRAMING PLAN

SCALE: 1/4"=1'-0"

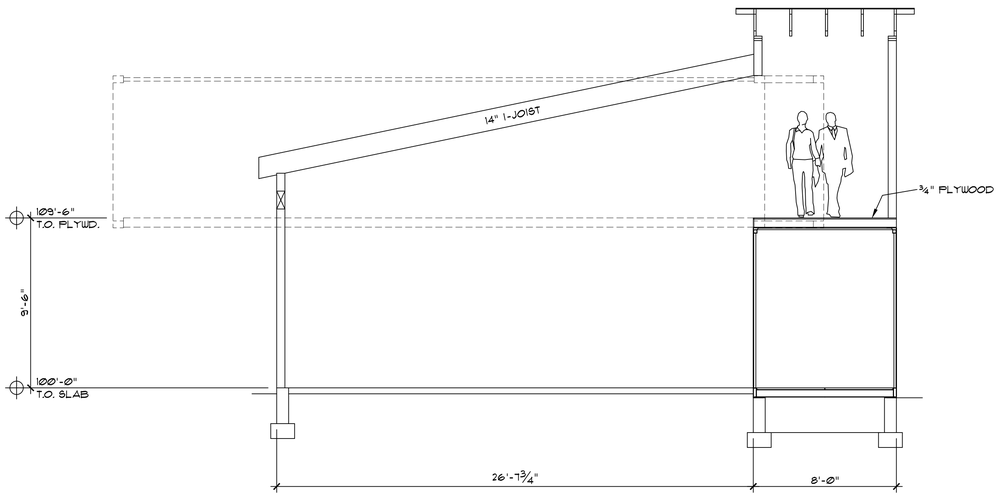

BUILDING SECTION

SCALE: 1/4"=1'-0"

COLORADO LICENSED
MARKED R. VALENTINE
5.30.24
35101
PROFESSIONAL ENGINEER

FORTNEY RESIDENCE

Lot 61, Unit 2
Eagle Flat Ranch
Huerfano County, CO

VALENTINE ENGINEERING, LLC
1108 N. Main Street
Pueblo, Colorado 81003 (719) 542-9230
www.ValentineEngineering.com

MAIN LEVEL FRAMING PLAN
-
BUILDING SECTION

Project:	23.079
Date:	May 30, 2024
Revision:	

© 2024

S2

2' 4' 6'
SCALE BAR: 1/4"=1'-0"