PLANNING & ECONOMIC DEVELOPMENT DIVISION
STAFF REPORT
Tom King, AICP, CZO - Senior Planner
Secretary to the Board of Adjustment

101 East Orange Street
P.O. Box 429
Hillsborough, NC 27278

Report Date: February 7, 2024

BOARD OF ADJUSTMENT

Agenda Item #: 5

CASE NUMBER	CASE NAME	APPLICANT/PROPERTY OWNER
BA-01-2024	Collins Ridge, Phase 2	The John R. McAdams Company, Inc./SFTEN, LLC
HEARING DATE	**PARCEL ID NUMBER**	**PROPERTY ADDRESS/LOCATION**
February 14, 2024	9874-10-4417	256 & 258 Orange Grove Street

BRIEF SUMMARY OF REQUEST

Special use permit for the 2nd phase of the Collins Ridge development. The proposal is a "Special Subdivision" consisting of 130 lots (79 single-family; 51 attached dwelling (townhome) lots).

EXISTING ZONING	EXISTING LAND USE	SURROUNDING ZONING/LAND USE	FUTURE LAND USE CATEGORY	SIZE OF PROPERTY
RSU & EDD	Partially graded & developed acreage	*North:* LO, AR & MHP/Ball fields & vacant *South:* EDD/I-85 & vacant *East:* RSU, HIC & GI/Rail corridor & industrial *West:* HIC, MF & GC/Commercial & vacant	Mixed Residential Neighborhood & Employment Area	97.12 acres

DISCUSSION OF STAFF FINDINGS

COMPLIANCE with the UDO (UNIFIED DEVELOPMENT ORDINANCE)

The proposed development complies with all applicable provisions of the UDO.

COMPATIBILITY with the COMPREHENSIVE PLAN

The proposed development generally complies with the Future Land Use Map, & portions of the Housing & Affordability, & Transportation & Connectivity elements of the Comprehensive Sustainability Plan.

GENERAL STANDARDS/FINDINGS OF FACT SUMMARY

All four general standards/findings of fact appear to be met.

ATTACHMENTS:
1. Application materials
2. FLUM & UDO provisions relative to case
3. Zoning history

SPECIAL INFORMATION APPLICABLE TO PROJECT:

Location:

Collins Ridge is currently under development on approximately 120.45 acres accessed by Orange Grove Street (becoming Gold Hill Way inside the development). The tract is bordered on the north by town-owned land (future train station site); south by I-85; east by the NC Railroad corridor; and west by commercially zoned/used land fronting on South Churton Street (SR #1009). Associated land area south of I-85 is not technically part of the development, but under the same ownership.

Prior Development Approvals:

Collins Ridge is subject to a master plan with associated development conditions approved by the Town Board of Commissioners as part of the 2016 rezoning of the property. The conditions were amended in October 2021 and June 2023, and are found on Sheets C0.02 and C0.03 (Conditions of Approval) of the Collins Ridge, Phase 2, plans (see Attachment #1).

The Town Board of Commissioners subsequently issued a special use permit authorizing development of Phase 1 in 2017. That permit contains conditions designed to reinforce specific master plan conditions, several of which relate to on- and off-site roadway improvements. A staff-level minor change to the plan affecting interior street and lotting arrangements was subsequently approved in December 2017. Attachment #3 contains a more detailed zoning history of the property.

Effect on Current Request:

Collins Ridge, Phase 2, if approved, will be subject to all applicable master plan and Phase 1 special use permit conditions, as well as any additional conditions imposed on the special use permit for Phase 2.

DETAILED PROJECT DESCRIPTION:

	Pod A	Pod B	Pod E	Pod F
Land Uses	Single-family Stormwater Control Measure #1	Single-family	Attached Dwellings, Townhomes	Attached Dwellings, Townhomes
# of Lots	50	29	36	15
Open Space (Acres)	2.88[1]	1.84[1]	0.18	2.51[1]
Amenities	Park Area (.45 acres) Bike Rack	Park Area (1.60 acres) Walking/Biking Trail/Greenway (10 feet wide; asphalt; ~385 linear feet[2])	Bike Rack	Park Area (acreage unspecified) Walking/Biking Trail/Greenway (10-feet wide; asphalt; ~970 linear feet[2])
On-street Parking	0	0	17 spaces	0
Other Project Elements	Completion of perimeter walking/biking trail/greenway (10-feet wide; asphalt; ~5,415 linear feet[2]) Dedication of 0.77 acres on the north side of Gold Hill Way to the town Dedication of 12.45 acres south of I-85 to the town			

[1] Includes identified Park Areas
[2] Part of a 6,291 linear foot perimeter greenway network.

STANDARDS OF EVALUATION ANALYSIS:

The following analysis represents staff's professional opinion based on review of the application materials and UDO. The Board must make its own determination as to whether these standards are met. This determination must be based on competent, material, and substantial evidence presented at the hearing.

Section 5 (Use Standards), Subsection 5.2 (Use-specific Standards), Paragraph 5.2.47 (Subdivision, Major or Special), Sub-paragraph 5.2.47.1 (Standards of Evaluation): The following specific standards shall be used to evaluate an application for approval of uses in this category:

5.2.47.1.a The preliminary subdivision plan shows lots that conform to the minimum lot size and width requirements shown in Section 6.3, *General Dimensional Standards*.

Staff Analysis: UDO Section 6.3 contains no specified minimum lot size or width requirement applicable to the RSU district. Proposed lot sizes and dimensions generally match those approved for Collins Ridge, Phase 1.

5.2.47.1.b Any new public street to be constructed as part of this proposal conforms to the town design specifications for that street type.

Staff Analysis: The proposed streets do not comply with the town's adopted street design standards. However, they generally comply with alternative street cross sections approved as part of the Collins Ridge Master Plan submittal (March 14, 2016) and Collins Ridge Phase 1 special use permit minor change approval (December 18, 2017).

5.2.47.1.c At least 20 new lots including any remainder are being crated from the parent tract within any five-year period for a Special Subdivision.

Staff Analysis: An additional 130 lots will be created from the parent parcel since the last lots were platted in June of 2023.

5.2.47.1.d The relevant development standards in Section 6 are met or reasonably can be met.

Staff Analysis: All applicable development standards of Section 6 (Development Standards) are or can be met.

<u>GENERAL STANDARDS/FINDINGS OF FACT ANALYSIS:</u>

The following analysis represents staff's professional opinion based upon review of the application materials, UDO, Comprehensive Sustainability Plan, and Future Land Use Map. The Board must make its own determination as to whether ***<u>all</u>*** the findings are met. This determination must be based on competent, material, and substantial evidence presented at the hearing.

Section 3 (Administrative Procedures), Subsection 3.8 (Special Use Permit), Paragraph 3.8.3 (General Standards/Findings of Fact): The Board of Adjustment shall not approve a Special Use Permit application unless it makes each of the following findings concerning the proposed special use:

3.8.3.1 That the use or development is located, designed, and proposed to be operated so as to maintain the public health, safety, and general welfare.

Applicant Statement Supporting Finding: As proposed, the development program is intended to provide permanent housing and recreational amenities through a cohesively designed development located within the Collins Ridge master planned community. This special use permit application represents the 2nd phase of a multi-phase project and is proposed to be operated to maintain the public health, safety and general welfare of all residents and visitors. The development standards attached to the approved Collins Ridge Master Plan helps ensure a quality development which protects public health, safety, and general welfare through thoughtful transitions of land use and design, distributed open spaces and amenities, appropriate buffers, and a cohesive transportation network.

The special use permit for Phase 1 of Collins Ridge was approved by the Town of Hillsborough on March 13, 2017. This application represents the continuation of that earlier approval, aligned with the approved Collins Ridge Master Plan.

Staff Analysis: Staff finds no reason why the proposed development will be detrimental to the public health, safety, and general welfare. All applicable town, county and state agencies were given the opportunity to review the plans against their respective regulations and provide comments to be incorporated into project design.

3.8.3.2 That the use or development complies with all required regulations and standards of this Ordinance, including all applicable provisions of Articles 4, 5, and 6 and all applicable regulations.

Applicant Statement Supporting Finding: As proposed, the uses and development comply with the approved Collins Ridge Master Plan and the Town of Hillsborough regulations and standards. The use is permitted as part of the previously approved Collins Ridge Master Plan.

Staff Analysis: Staff offers the following in relation to this finding:

1. *Compliance with Section 4*

   The project complies with the intent of the RSU (Residential Special Use) district described in UDO Section 4 (Zoning Districts) (see Attachment #2). The Collins Ridge development, of which Phase 2 is a part, includes detached single-family and attached dwelling (townhome and apartments) housing opportunities. Proposed lots in Phase 2 are of varying sizes and widths designed for detached single-family dwellings and townhomes.

2. *Compliance with Section 5*

   The project plans comply with the standard of UDO Section 5 (see "Standards of Evaluation Analysis," above).

3. *Compliance with Section 6*

Condition #15 (Compliance with Unified Development Ordinance) of the Collins Ridge Conditions of Approval states that "…in the event that there are inconsistences between the Town Unified Development Ordinance and the Collins Ridge Master Plan at the time any Special Use Permit application is submitted, the terms of the Collins Ridge Master Plan shall control."

The Phase 2 plans have been reviewed against the Collins Ridge Master Plan Conditions of Approval and the UDO. They comply with all standards of Section 6 not in conflict with the Master Plan.

3.8.3.3 That the use or development is located, designed, and proposed to be operated so as to maintain or enhance the value of contiguous property, or that the use or development is a public necessity, and

Applicant Statement Supporting Finding: As proposed, the use and development is located, designed, and proposed to be operated so as to maintain or enhance the value of contiguous property. The development provides buffer protections to surrounding properties.

Staff Analysis: Staff sees no reason why the use will injure the value of contiguous property. Most of adjacent properties are zoned and/or used for nonresidential purposes. The development is not a public necessity.

3.8.3.4 That the use or development conforms with the general plans for the physical development of the Town and is consistent with the Town's Comprehensive Plan.

Applicant Statement Supporting Finding: As proposed, the use and development conforms with the general plans for the physical development of the town and is consistent with the town's Comprehensive Plan. Both phases of this project are located within the overall Collins Ridge Master Plan, which allowed for up to 1,038 residential units (including 88 CASA affordable housing units). The special use permit for Phase 1 (approved 3/13/2017) permitted 674 residential units (based on the approved special use permit resolution). The special use permit application for Phase 2 would permit an additional 131 units included within the overall Collins Ridge Master Plan (this 131-unit figure does not include the CASA affordable housing units to be constructed on a portion of the Daniel Boone tract). Accordingly, the use is in conformance with the town's approved and adopted plans.

Staff Analysis: Staff has evaluated the project in relation to the town's Future Land Use Map and Comprehensive Sustainability Plan and offers the following findings:

1. *Future Land Use Map*

The property is classified as "Mixed Residential Neighborhood" (see Attachment #2). The proposed development conforms with this land use category because it provides a mix of single-family and attached dwelling lots with associated open space and recreation facilities.

2. *Comprehensive Sustainability Plan*

   Certain elements of the plan further goals and strategies found in the Comprehensive Sustainability Plan as follows:

   a. Housing and Affordability Element

      Goal: Develop and maintain a variety of safe, healthy, and sustainable housing options to increase housing stability for renters and homeowners.

      Strategy: Adopt development regulations that contribute to meeting identified affordable housing needs.

      Strategy Point #5: Increase diversity of housing stock through development regulations and decisions.

      Collins Ridge, Phase 2, includes a mix of single-family and attached dwelling housing. Approval of the project may be seen as furthering this strategy to some degree.

   b. Transportation and Connectivity Element

      While not furthering any one specified goal or strategy in the Transportation and Connectivity element, the eastern segment of greenway would ultimately be dedicated to the town and become part of the town's Ridge Walk greenway trail that would tie into the existing town River Walk greenway. Riverwalk greenway is planned to be a segment of the state's Mountains-to-Sea trail greenway.

RECOMMENDED CONDITIONS OF APPROVAL:

Staff recommends the following conditions be placed on the approval to further implementation of the Collins Ridge Master Plan Conditions of Approval, as amended, and UDO Subsection 6.20 (Stormwater Management):

1. The 0.77-acre parcel of land located on the north side of Gold Hill Way, and 12.45-acre parcel of land located on the south side of US Interstate 85, both labeled in the submitted Collins Ridge, Phase 2, Special Use Permit plans as "to be dedicated to Town of Hillsborough," shall be dedicated before any additional town approvals are issued for development of Collins Ridge, Phase 2.

2. The project developer shall be responsible for negotiating with the property owner regarding the off-site greenway easement crossing the Department of Transportation property identified as Orange County PIN (Parcel Identification Number) 9874-22-0495 and Deed Book 6316, Page 175, of the Orange County Registry.

3. Construction plans for the remaining portions of the perimeter walking/biking trail greenway shall be submitted to the town for review at the time of construction drawing submittal for Collins Ridge Phase 2. The plans shall be submitted as a separate document as part of the Phase 2 construction drawing submittal.

4. Underground stormwater systems shall be used to convey stormwater to “Existing Stormwater Control Measure “1”” as shown in the submitted Collins Ridge, Phase 2, Special Use Permit plans. The systems shall be installed prior to completion of Stage 1 erosion and sedimentation control activities unless Town Stormwater and Environmental Services Division staff approve their completion at a later stage of project development.

5. The underground stormwater systems used to convey stormwater to “Existing Stormwater Control Measure “1” ” (as shown in the submitted Collins Ridge, Phase 2, Special Use Permit plans) are considered an integral component of Stormwater Control Measure 1 within its operation and maintenance easement and agreement, and will be subject to the same inspection and maintenance requirements as all other stormwater control measures and their components located within the Collins Ridge development.

TOWN OF
HILLSBOROUGH

APPLICATION FOR
Special Use Permit

Planning Department101
E. Orange Street / P.O. Box 429
Hillsborough, NC 27278
Phone: (919) 296-9472, Fax: (919) 644-2390
Website: www.hillsboroughnc.gov

Project Title: Collins Ridge SUP 2

Address: N/A (not assigned yet)

PIN # 9874104407

Property Owner Name: SFTEN, INC c/o DR HORTON (ATTN: Robert Stuart)

Mailing Address: 2000 Aerial Drive, Suite 110

City, State, Zip: Morrisville, NC 27560

Phone: 919-460-2943
E-mail: RCStuart@drhorton.com

Applicant Name: David Bergmark (McAdams)

Mailing Address: 2905 Meridian Parkway

City, State, Zip: Durham, NC 27713

Phone: 919-449-4005
E-mail: bergmark@mcadamsco.com

Surveyor/Engineer: Brad Rhinehalt (McAdams)

Mailing Address: 2905 Meridian Parkway

City, State, Zip: Durham, NC 27713

Phone: 919-538-4826
E-mail: rhinehalt@mcadmsco.com

Zoning: RSU

Adjacent Zoning: RSU, HIC, MHP, AR

Acreage: 28.57 AC

Phases:

Water Service: ■ Public Water ☐ Well

Sewer Service: ■ Public Sewer ☐ Septic Tank

Existing Structures:
N/A

Proposed Structures:
Residential (Single Family, Townhomes)

I/We certify that all of the information presented by me/us in this application is accurate to the best of my/our knowledge, information, and belief.

APPLICATIONS WILL NOT BE ACCEPTED WITHOUT SIGNATURE OF PROPERTY OWNER.

Applicant's signature **date**

SFTEN, LLC
By:

10/11/22

Property Owner's signature **date**

TOWN OF
HILLSBOROUGH

Owner's Authorization for Agent

Planning Department 101
E. Orange Street / P.O. Box 429
Hillsborough, NC 27278
Phone: (919) 296-9472, Fax: (919) 644-2390
Website: www.hillsboroughnc.gov

This form must accompany any applications going before the Board of Adjustment.

EACH AND EVERY OWNER SHOWN ON THE PROPERTY OWNER'S DEED MUST SIGN THIS AUTHORIZATION FORM

I/WE SFTEN, LLC hereby authorize
(print name of property owner/s)

David Bergmark (McAdams) to represent me/us in processing an application for a
(print name of agent)

Special Use Permit on our behalf. In authorizing the agent to represent me/us, I/we, as owner/owners, attest that the application is (i) made in good faith; (ii) that all information contained in the application is accurate and complete; (iii) that the agent is authorized to accept any and all conditions that may be placed on the approval; and (iv) that I/we as the property owner are bound by any decision of the Board, including any and all conditions attached to Board approvals.

SFTEN, LLC
by: _____
(Signature of Owner)

_____
(Signature of Owner)

_____
(Print Name of Owner)

Phillip Jacobs, CFO
(Print Name of Owner)

****

NORTH CAROLINA WAKE COUNTY

Sworn to and subscribed before me on this 11 day of October, 2022 by PHILLIP JACOBS, CFO, SFTEN, LLC.
(name of person making statement)

S. ELAINE HUDSPETH
Notary Public
(SEAL) North Carolina
Forsyth County

_____
Signature of Notary Public

S. Elaine Hudspeth
Print Commissioned Name of Notary Public

My Commission expires: 11/4/22

The individual(s) making the above statement is ✓ personally known or _____ identification was produced.

3.8.3 GENERAL STANDARDS/FINDINGS OF FACT

The Board of Adjustment shall not approve a Special Use Permit application unless it makes each of the following findings concerning the proposed special use:

1. That the use or development is located, designed, and proposed to be operated so as to maintain the public health, safety, and general welfare.

   Response: As proposed, the development program is intended to provide permanent housing and recreational amenities through a cohesively designed development located within the Collins Ridge Master Planned Community. This Special Use Permit application represents the 2nd phase of a multi-phase project and is proposed to be operated to maintain the public health, safety, and general welfare of all residents and visitors. The development standards attached to the approved Collins Ridge Master Plan helps ensure a quality development which protects public health, safety, and general welfare through thoughtful transitions of land use and design, distributed open spaces and amenities, appropriate buffers, and a cohesive transportation network.

   The SUP for Phase 1 of Collins Ridge was approved by the Town of Hillsborough on March 13, 2017. This application represents the continuation of that earlier approval, aligned with the approved Collins Ridge Master Plan.

2. That the use or development complies with all required regulations and standards of this Ordinance, including all applicable provisions of Articles 4, 5, and 6 and all applicable regulations.

   Response: As proposed, the uses and development comply with the approved Collins Ridge Master Plan and the Town of Hillsborough regulations and standards. The use is permitted as part of the previously approved Collins Ridge Master Plan.

3. That the use or development is located, designed, and proposed to be operated so as to maintain or enhance the value of contiguous property, or that the use or development is a public necessity; and

Response: As proposed, the use and development is located, designed, and proposed to be operated so as to maintain or enhance the value of contiguous property. The development provides buffer protections to surrounding properties.

4. That the use or development conforms with the general plans for the physical development of the Town and is consistent with the Town's Comprehensive Plan.

Response: As proposed, the use and development conforms with the general plans for the physical development of the Town and is consistent with the Town's Comprehensive Plan. Both phases of this project are located within the overall Collins Ridge Master Plan, which allowed for up to 1038 residential units (including 88 CASA affordable housing units). The Special use Permit for phase one (approved 3/13/2017) permitted 674 residential units [based on the approved SUP resolution]. The Special Use Permit application for Phase 2 would permit an additional 131 units included within the overall Collins Ridge Master Plan (this 131 unit figure does not include the CASA affordable housing units to be constructed on a portion of the Daniel Boone tract) . Accordingly, the use is in conformance with the Town's approved and adopted plans.

Collins Ridge Design Compliance Statements (SUP2 – 11/28/23)

Per the Collins Ridge Master plan Conditions of Approval, Statement of Intent Applicable Generally to the Master Plan, 3rd paragraph, "the developer of the Collins Ridge project, its successors and assigns, shall explain specifically the manner in which the design for improvements on each Parcel address the following issues at the time that application for Special Use Permits are submitted to the Town for each Parcel depicted in Collins Ridge Master Plan.

The responses below address each element identified in the Collins Ridge Master Plan for the area included within SUP2.

Site Lighting

- Lighting within the Collins Ridge Phase 2 area shall adhere to the standards contained within Section 6.11 of the UDO, including but not limited to the following standards:
    - All outdoor lighting shall be designed and located such that the maximum illumination measured in foot candles at the light source's property line shall not exceed two tenths (0.2) foot candle measured at ground level where the adjoining property is zoned or used for residential purposes.
    - Light intensities shall not exceed fifteen (15) foot-candles at any location on the site to limit glare and blinding caused by significant light variations across a site.
    - Directional lighting fixtures used for sign lighting shall be top mounted, so lighting is aimed down. Ground mounted signs with a height of five (5) feet or less may be ground lit, provided that the lights are shielded so as to illuminate the sign only, and the light shall not exceed 10 foot-candles at the sign surface.

On-Street Parking

- Marked on-street parking is provided adjacent to attached residential units along Bluffberry Lane (27 spaces) and on the section of Gold Hill Way closest to I-85 (15 spaces), in close proximity of the smallest lots. These on-street parking spaces will provide supplemental parking for visitors and will be constructed to Town of Hillsborough standards.
- Within Phase 2, marked on-street parking is not needed given the proposed land uses and very limited number of townhomes included in POD F.

Emergency Vehicle Access to the site

- Existing emergency vehicle access is provided via Orange Grove Street/Gold Hill Way, off S. Churton Street. This roadway was constructed during Phase 1 of Collins Ridge to meet

applicable fire and emergency service access requirements in conjunction with an emergency gravel accessway through the Duke Power easement from the Boone Center area to the Collins Ridge project. Phase 2 of Collins Ridge will extend streets off this existing network per the updated Master Plan conditions of approval. For the new streets sections A and B, each has been widened to a minimum of 26' f-f as discussed with the Fire Marshal. The majority of the units within Phase 2 are clustered close to the Collector Road portion of Gold Hill Way. The developer has been working with the Town to gain approval on the James J. Freeland Memorial Drive plans extend from S. Churton Street to Collins Ridge and they plan to start work as permits are finalized. This will give the project a secondary access to Gold Hill Way which would allow the Duke Easement gravel access to be removed.

Buffering between different land uses

- The buffers in Pods A, B and F have generally been revised to meet the applicable planting requirements found in UDO (Unified Development Ordinance) Section 6 (Development Standards), Subsection 6.5 (Buffers), Paragraph 6.5.4 (Buffer Descriptions and Standards), Table 6.5.4.1 (Standards for Type A Buffers) and Table 6.5.4.2 (Standards for Type B Buffers).
- Within the Phase 2 plan set, Type B buffers are provided along the project perimeter except for a Type A buffer along the western boundary of Phase 2, in accordance with UDO requirements. The approved Master Plan Modification (approved June 12, 2023) permits a portion of this Type A buffer between Open Air Lane and Gold Hill Way to be a modified Type A1 buffer to avoid placing landscaping within an existing utility easement.
- Per the Master Plan modifications approved 6/12/23, in order to provide the required walking/biking trails the developer shall be permitted to grade and clear within the 100' perimeter buffer as needed to facilitate construction of the proposed multiuse path, including construction of retaining walls and boardwalks needed due to grade and topography. The developer shall still be responsible for the adherence to all applicable buffer planting requirements.
- Street trees are provided at a rate in compliance with the approved master plan, except where sight distance requirements necessitate deviations. A note has been added that street trees shall be planted at a minimum of 2.5-inch caliber at the time of installation.

Street Design within the parcel

- In accordance with the Master Plan modification approved by resolution on June 12, 2023, Streets within Collins Ridge shall be built to the standards shown on Exhibit 13 of the Collins Ridge Master Plan, entitled "Proposed Street Sections", with the following exceptions:
    - The developer is permitted to apply alternative street cross sections to match those that were approved as part of the 'Collins Ridge Revision to Special Use Permit Drawings- Phase 1' dated December 8, 2017 (SUP 1) along Open Air Lane, Lightfoot

Lane, Gold Hill Way, Poet Pointe, and Flat Ford Road as shown in the Master Plan Amendment Exhibit Map dated 5/26/23.

- The Phase 2 plan set cross-sections reflect the modifications permitted above, with all remaining street segments adhering to the standards included on Exhibit 13 of the Collins Ridge Master Plan.

Connectivity (vehicular and pedestrian) within the parcel and among neighboring parcels

- The Street network is designed to provide interconnection between and among the various parcels that make up the Collins Ridge Master Plan. Connections to adjacent parcels or ROW are provided where reasonable, but these connections are limited due to adjacent railroad ROW and limited access highways.
- Per the June 2023 Master Plan Modification, due to severe topography and potential off-site easements, Open Air Lane shall be permitted to stub short of the Collins Ridge western property boundary if certain requirements are met, as spelled out in the Master Plan conditions as revised.
- The approved Master Plan called for a second permanent vehicular and pedestrian access point to be secured (an irrevocable legal right to provide a 2nd access point) in a location acceptable to the Town's consulting traffic/transportation consultant and to NDOT, connecting the main north-south "spine" road on Collins Ridge Master Plan generally as shown on Exhibit 11, entitled Phasing Plan, in addition to the primary access shown on Proposed Collins Ridge Master Plan map from Orange Grove Road.
    - The applicant has an approved set of construction drawings from the Town to provide this 2nd connection via James J Freeland Memorial Drive.
- All proposed streets include pedestrian facilities. In addition to roadside pedestrian facilities, Phase 2 includes portions of the 10' min. walking/biking trail circling the site's southern and eastern border. Additionally, a 10' greenway is shown extending from Open Air Lane into the neighborhood Park provided within POD B (see plan page C2.00A).

Building and Site Design

- The proposed Phase 2 of Collins Ridge is in adherence with the approved Collins Ridge Community Design Guidelines, incorporated within the approved master plan.
    - Site amenities are distributed throughout the development to create an attractive community with visual interest, an enhanced pedestrian experience, and opportunities to engage with the outdoor environment.
    - Streets are interconnected with ample pedestrian facilities, landscaping, and lighting.
    - The proposed community supports alternative modes of travel, through the inclusion of significant pedestrian facilities, bicycle racks, and transit facilities. See page C2.00A for details on bicycle racks and transit facilities.

- LID approaches are analyzed and implemented where possible. Filterra devices were incorporated as green bioretention systems.
- All townhomes and single-family dwellings proposed within Phase 2 of Collins Ridge shall adhere to the Design Guidelines incorporated into the appendix of the approved Master Plan, as they relate to such items as building articulation, architectural treatments, materials selection, color pallets, and standard sight furnishings.
- As conveyed in the Landscaping pages of the Phase 2 plan submittal, landscaping is used to enhance placemaking and define space by creating public and private gathering spaces, and define streets, edges, and corners. Street trees are planted along all streets throughout the community (between 25-50 ft OC) to maintain transitions and to integrate neighborhood design.
- Where Townhomes are proposed, the primary entrances are clearly defined and face the street, or that portion of the façade facing the street is designed to display the same design characteristics and architectural details as the front façade. Direct pedestrian access to the street is provided for residences oriented to the street.

Location, specific design, and timing of construction of recreation features and amenities; signage for and within parcels, including location and design.

- The original master plan required the developer to "offer to dedicate to the Town of Hillsborough at least 2 acres of land generally as shown in Exhibit 9, entitled Master Plan Collins Ridge, within 30 days of purchase of the property subject to the Collins Ridge Master Plan by Caruso Homes." The master plan modifications approved on June 12, 2023 reduced this dedication requirement to 0.7 acres and instead offered 12.45 acres of land south of I-85 (identified in the plan set).
- Community Center: The approved Master Plan requires that the developer "shall construct a community center building at least 3000 sq. feet in size, including at least one meeting room, a catering kitchen, an outdoor swimming pool at least 2500 sq. ft in size, 2 tennis courts, restroom/changing rooms and 20 parking spaces to serve the townhome and single-family homes. The community center tract shall be at least 3 acres in size. The community Center shall be completed prior to the issuance of a certificate of occupancy for the 300th townhome and/or single-family detached home in Collins Ridge (it being the intent that apartment units are not counted for purposes of this subparagraph because apartment units will have some recreational amenities incorporated into their design"
    - This requirement has already been met, as illustrated in the Recreation Point Table.
- Neighborhood Parks: The approved Master Plan requires that the developer "shall construct at least 6 neighborhood parks - one within each of the Parcels (A-F) in Collins Ridge Community. At least 3 of the neighborhood parks shall include fenced children's playgrounds. Each park shall be at least one-quarter (1/4) acre in size. The timing of the

construction and completion of the required neighborhood park within each parcel shall be determined during the special use permit process for that Parcel. Neighborhood parks may be provided in combination with Recreational Amenities in Apartment Complexes. Although the general location of neighborhood parks is shown on Exhibit 9, entitled Proposed Master Plan, the final location of each neighborhood park shall be determined during the Special Use Permit review and approval process for the Parcel in which each park is located."

  - The SUP2 Master Plan (page C2.00) identifies a neighborhood Park in each POD (POD A, B & F) of at least ¼ acre in size. Phasing of Park spaces shall adhere to the phase lines approved during construction drawing submittal. Design/programming of these park spaces will be performed with construction drawings.
  - Page C2.00A of the SUP2 Plan set identifies the location of 2 existing fenced in playgrounds and 1 proposed fenced in playground – meeting the Master Plan requirements.

- Additional Recreational Amenities for Apartment Complexes: This section is not applicable to the SUP2 area, as no apartments are proposed.
- Sidewalks: All public roads incorporate sidewalks, per Town of Hillsborough requirements.
- Walking/Biking Trails: Per the approved Master Plan, the developer shall construct at least 6,000 linear feet of walking/biking trails, in addition to sidewalks. Walking/biking trails shall be constructed generally as shown on the "proposed Master Plan Collins Ridge Map", identified as Exhibit 9 of Collins Ridge Master Plan. Waking/biking trails shall be at least ten feet (10') wide and constructed of asphalt in accordance with Town of Hillsborough trail standards, including the Access Board Guidelines. Walking/biking trails located within the perimeter buffer of Collins Ridge shall be dedicated to the Town of Hillsborough and accepted by the Town of Hillsborough for maintenance.
  - The submitted SUP2 plans have been updated to show a walking/bicycle trail circling the eastern edge of the Collins Ridge site, in the revised location permitted by the 2021 Master Plan modification resolution (See page C2.00A).
- Bicycle Racks: Per the approved Collins Ridge Master Plan, to encourage the use of bicycles within the community, the developer shall provide at least 12 total Bike Rack Stations located at the community Center, apartment complexes, parks and transit stops throughout the Collins Ridge Community. Each Bike Rack Station shall contain parking for at least six (6) bicycles.
  - The submitted SUP2 plan set shows the location of the required 12 bike rack stations (see page C2.00A).
- Transit/Bus Stops: Per the approved Master Plan, 3 transit stops with 20' x 15' easements (specific design and location of each to be determined during the SUP approval process) are required prior to issuance of the 1st CO for the parcel associated with the transit stop. The general location was shown on Exhibit 9 of the Master Plan document, but the stops may be relocated during SUP process for that parcel to another location along the main spine road.
  - 3 transit stop easements are identified on page C2.00A (1 along James J Freeland Memorial Drive, and 2 along Gold Hill Way.)

- Signage: Signage locations and details are provided to promote visual attractiveness, unique character, brand identity, and wayfinding. Two main types of signate are incorporated into the Phase 2 plans – monument signs and directional signs. a. We have an approved and constructed monument sign within POD A. Furthermore, we have a sign package for our main amenity site which has been provided to the town for Phase 1.

Compliance with applicable stormwater regulations applicable site lighting

- Per the approved Master Plan resolution, all stormwater devices to be located within Collins Ridge shall be reviewed and approved by the Town prior to construction, but shall remain the property and maintenance responsibility of the developer, or in its sole discretion, a property owner and or tenants' association to be established by the developer. In addition, the developer shall comply with all Federal, state, and local stormwater regulations, including riparian buffer regulations.
- The developer has recorded a Master Declaration of Covenants, Conditions, Restrictions and Easements for Collins Ridge in Book 6687 pages 1978-2037, requiring the Association to maintain the following:
    - All Landscaped rights-of-way (including trees planted within said rights-of-way) and all entry features.
    - All Common Area, and all landscaping, paving, streets, structures and improvements of any nature located thereon; and
    - All ponds, streams and culverts located on the Property which serve as part of any Stormwater Control Facilities.

Buffers and Setbacks within Parcels (internal to the site)

- Proposed setbacks for SFD detached and Townhome Units (as provided on the cover sheet of the SUP2 plan set) are in adherence with setbacks included within the approved Collins Ridge Master Plan.
- Within Phase 2, no internal buffers separating land uses contained within the site are proposed. All proposed Townhomes are separated from single-family detached lots by Goldhill Way or James J. Freeland Memorial Drive. Street trees soften the view between different land uses, but are not intended to screen one land use from another.

COLLINS RIDGE - PHASE 2

CERTAIN ITEMS WITHIN THESE PLANS HAVE BEEN PRODUCED IN COLOR FOR CLARITY OF THE PLANS. THESE PLANS MUST BE PLOTTED IN COLOR TO BE VALID.

258 ORANGE GROVE STREET
HILLSBOROUGH, NC

SPECIAL USE PERMIT

PROJECT NUMBER: DRH-21002

DATE: OCTOBER 17, 2022

SITE DATA

OWNERS: COLLINS RIDGE	SFTEN, LLC c/o DR HORTON ATTN: ROBERT STUART 2000 AERIAL DRIVE, SUITE 110 MORRISVILLE, NC 27560
PHONE:	919-460-2943
PIN NUMBER:	9874104407
ZONING CLASSIFICATION:	RESIDENTIAL SPECIAL-USE (RSU) - 120.06 AC ECONOMIC DEVELOPMENT DISTRICT (EDD) - 12.45 AC MULTI-FAMILY (MF) - CASA TRACT 4.38 AC
PROPOSED USE:	RESIDENTIAL (SINGLE FAMILY, TOWNHOMES)
RIVER BASIN:	NEUSE
FLOODPLAIN ON SITE:	NONE - SEE FEMA FIRM PANEL 3710987400K (EFFECTIVE NOVEMBER 17, 2017)
WATERSHED:	LOWER ENO UNPROTECTED
TOTAL SITE:	119.29 AC (PHASE 2 ONLY = 23.86 AC)
POD A:	13.76 AC
POD A DENSITY:	50 UNITS / 13.76 AC = 3.63 UNITS/AC
POD B:	7.40 AC
POD B DENSITY:	21 PROPOSED UNITS / 7.40 AC = 2.84 UNITS/AC
POD C:	37.62 AC
POD C DENSITY:	(8 PROPOSED UNITS +185 EXISTING UNITS) / 37.62 AC = 5.13 UNITS/AC
POD D:	18.73 AC
POD D DENSITY:	326 PROPOSED UNITS / 18.73 AC = 17.41 UNITS/AC
POD E:	29.32 AC
POD E DENSITY:	(36 PROPOSED UNITS + 132 PREVIOUSLY APPROVED + 21 FUTURE UNITS) / 29.32 AC = 6.45 UNITS/AC
POD F:	3.87 AC
POD F DENSITY:	15 PROPOSED UNITS / 3.87 AC = 3.88 UNITS/AC
BIKE RACKS:	
REQUIRED:	72 SPACES
EXISTING:	3 SPACES
UNDER SEPARATE COVER:	36 SPACES
PROPOSED:	24 SPACES
NUMBER OF UNITS:	
SINGLE FAMILY:	38 - 40' UNITS 41 - 50' UNITS 79 TOTAL UNITS
TOWNHOMES:	19 - 22'/28' UNITS (28' FOR END UNITS) 16 - 26'/32' UNITS (32' FOR END UNITS) 16 - 22'/26' UNITS (26' FOR END UNITS) 51 TOTAL UNITS (MIN SIZE 22'W, 3 BEDROOM)
OPEN SPACE:	
POD A:	2.88 AC (20.9%)
POD B:	1.72 AC (23.2%)
POD C:	1.28 AC (3.40%)
POD D:	3.36 AC (17.9%)
POD E:	7.39 AC (25%)
POD F:	2.51 AC (64.9%)
TOTAL OPEN SPACE:	(19.14 AC / 119.29 AC) x 100 = 16%
PARKING:	PER MASTER PLAN
SINGLE FAMILY:	2 SPACES REQUIRED PER UNIT - 2 SPACES PROVIDED (GARAGE/DRIVEWAY)
TOWNHOMES:	2 SPACE REQUIRED PER UNIT - 2 SPACES PROVIDED (GARAGE/DRIVEWAY)
ON-STREET PARKING:	17 SPACES
PROPOSED GREENWAY LENGTH (PHASE 2):	5,415 LF
GREENWAY LENGTH (PHASE 1A):	552 LF
GREENWAY LENGTH (FUTURE):	324 LF
TOTAL GREENWAY LENGTH AT PROJECT COMPLETION:	6,291 LF
PUBLIC STREETS:	
POD A:	1,868 LF
POD F:	734 LF
POD B:	653 LF
POD E:	710 LF
SETBACKS (MIN.):	
TOWNHOMES:	
FRONT:	
STREET/ALLEY:	5' FROM PUBLIC RIGHT-OF-WAY
REAR:	
STREET/ALLEY:	5' FROM PUBLIC RIGHT-OF-WAY / 5' FROM PROPERTY LINE
SIDE:	
STREET/ALLEY:	10' FROM PUBLIC RIGHT-OF-WAY / 5' FROM PROPERTY LINE
SINGLE FAMILY:	
FRONT:	5'
REAR:	5'
** SIDE:	3' (6' MIN BETWEEN BUILDINGS)

* THERE IS AN IMPLIED 3' SETBACK WHERE INTERIOR SIDE LOT LINES ADJOIN NEIGHBORING INTERIOR SIDE LOT LINES

MAXIMUM BUILDING HEIGHTS SHALL BE 3 STORIES FOR SINGLE FAMILY AND TOWNHOMES

MINIMUM BUILDING SEPARATION BETWEEN TOWNHOMES SHALL BE 12'

DEVELOPMENT WITHIN COLLINS RIDGE SHALL CONFORM TO THE STANDARDS OF THE APPROVED COLLINS RIDGE MASTER PLAN DOCUMENT DATED DECEMBER 21, 2015 AND AS AMENDED OCTOBER 11, 2021 AND JUNE 12, 2023. FOR ITEMS NOT ADDRESSED WITHIN THE APPROVED MASTER PLAN, THE TOWN OF HILLSBOROUGH UDO STANDARDS SHALL APPLY.

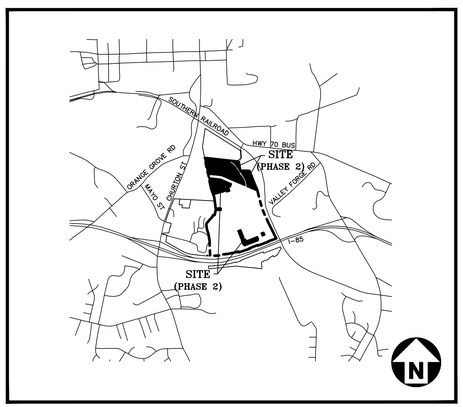

VICINITY MAP

N.T.S.

GENERAL NOTES:

1. SOUTHERN PARCEL 9874104407 (12.45 AC) TO BE DEDICATED TO TOWN OF HILLSBOROUGH
2. A VESTED RIGHT PURSUANT TO NCGS 160D-108 AND SECTION 1.8 OF THE UNIFIED DEVELOPMENT ORDINANCE IS ESTABLISHED AS OF THE DATE HEREOF. UNLESS TERMINATED AT AN EARLIER DATE, THE VESTED RIGHT OF THE APPROVAL SHALL BE VALID UNTIL _____.

PROJECTED FINAL RECREATION POINTS REQUIRED AT PROJECT COMPLETION

Phase 1	*#*	*Points*	*Total*
Residential (All 3 Bedroom Minimum)	338	12	4056
Pod D Apts 1 BR	144	6	864
Pod D Apts 2 BR	147	9.5	1396.5
Pod D Apts 3BR	35	12	420
CASA 1BR	36	6	216
CASA 2BR	36	9.5	342
Total			**7294.5**
Phase 2	**130**	**12**	**1560**
Collins Ridge TOTAL	**866**		**8854.5**

ORIGINAL PHASE 1A APPROVED RECREATION POINT TABLE

RECREATION POINT TABLE			
RECREATION ELEMENTS	SF	MULTIPLIER	CREDIT
COMMUNITY CLUBHOUSE	3,529	0.508	1,792.52
COMMUNITY POOL	3,010	0.463	1,393.63
COMMUNITY POOL DECK	5,445	0.02	108.90
PLAYGROUNDS (2)	11,912	0.216	2,572.99
TENNIS COURTS (2)	13,680	0.028	383.04
GREENWAY (INCLUDES 20' EASEMENT)	58,664	0.016	938.62
TOTAL PHASE 1A POINTS PROVIDED			7,190
TOTAL PHASE 1 POINTS REQUIRED			6,923

RECREATIONAL POINT TABLE

RECREATION ELEMENTS	MULTIPLIER	PHASE 1A		PHASE 1B		PROPOSED SUP 2		TOTAL		
		QUAN.	SF	QUAN.	SF	QUAN.	SF	QUAN.	SF	CREDIT
COMMUNITY CLUBHOUSE	0.508	1	3,514					1	3,514	1,785.11
COMMUNITY POOL	0.463	1	3,934					1	3,934	1,821.44
COMMUNITY POOL DECK	0.020	1	7,006					1	7,006	140.12
PLAYGROUNDS	0.216	2	9,884	1	3,910			3	13,794	2,979.50
TENNIS COURTS	0.028	2	13,320					2	13,320	372.96
*APARTMENT CLUBHOUSE (POD D)	0.508								9,037	4590.80
*APARTMENT POOL (POD D)	0.463								2,448	1133.42
*APARTMENT POOL DECK (POD D)	0.020								6,294	125.88
GREENWAY (INCLUDES EASEMENT)	0.016	1	5,524			1	108,367	2	113,891	1822.26
TOTAL POINTS PROVIDED										14,771.5
TOTAL POINTS REQUIRED FOR PHASE 1										7,294.5
TOTAL POINTS REQUIRED FOR PHASE 2										1,560
TOTAL POINTS REQUIRED FOR COLLINS RIDGE										8,854.5

*PROVIDED BY UDP ON 10-19-2023

Know what's below. Call before you dig.

CONTRACTOR SHALL NOTIFY "NC811" (811) OR (1-800-632-4949) AT LEAST 3 FULL BUSINESS DAYS PRIOR TO BEGINNING CONSTRUCTION OR EXCAVATION TO HAVE EXISTING UTILITIES LOCATED. CONTRACTOR SHALL CONTACT ANY LOCAL UTILITIES THAT PROVIDE THEIR OWN LOCATOR SERVICES INDEPENDENT OF "NC811". REPORT ANY DISCREPANCIES TO THE ENGINEER IMMEDIATELY.

SEE SHEET C0.01 FOR ALL PROJECT, SITE, GRADING, STORM DRAINAGE AND UTILITY NOTES

ALL CONSTRUCTION SHALL BE IN ACCORDANCE WITH THE CURRENT TOWN OF HILLSBOROUGH AND NCDOT STANDARDS, SPECIFICATIONS, AND DETAILS.

PRELIMINARY DRAWING - NOT RELEASED FOR CONSTRUCTION

SHEET LIST TABLE

C0.01	NOTES
C0.02	CONDITIONS OF APPROVAL
C0.03	CONDITIONS OF APPROVAL
C1.00	CURRENT CONDITIONS PLAN
C2.00	MASTER SITE PLAN
C2.00A	OVERALL TRANSPORTATION PLAN
C2.01	SITE PLAN AREA "A"
C2.02	SITE PLAN AREA "B"
C2.03	SITE PLAN AREA "C"
C2.04	SIGNAGE AND PAVEMENT MARKING PLAN AREA "A"
C2.05	SIGNAGE AND PAVEMENT MARKING PLAN AREA "B"
C2.06	SIGNAGE AND PAVEMENT MARKING PLAN AREA "C"
C3.00	OVERALL GRADING AND STORM DRAINAGE PLAN
C4.00	OVERALL UTILITY PLAN
C6.00	OVERALL EROSION CONTROL PLAN - STAGE 1
C6.10	OVERALL EROSION CONTROL PLAN - STAGE 2
C8.00	SITE DETAILS
C8.01	WATER DETAILS
C8.02	SANITARY SEWER DETAILS
C8.03	STORM DRAINAGE DETAILS
L5.00	OVERALL LANDSCAPE PLAN
L5.01	LANDSCAPE PLAN AREA "A"
L5.02	LANDSCAPE PLAN AREA "B"
L5.03	LANDSCAPE PLAN AREA "C"
L5.04	LANDSCAPE NOTES AND SCHEDULES
L6.00	OVERALL LIGHTING PLAN
A1.00	BUILDING ELEVATIONS
A1.01	BUILDING ELEVATIONS
A1.02	BUILDING ELEVATIONS

McADAMS
The John R. McAdams Company, Inc.
2905 Meridian Parkway
Durham, NC 27713

phone 919. 361. 5000
fax 919. 361. 2269
license number: C-0293, C-187

www.mcadamsco.com

CONTACT

BRAD RHINEHALT, PE
rhinehalt@mcadamsco.com
PHONE: 919. 361. 5000

CLIENT

DR HORTON
2000 AERIAL DRIVE
MORRISVILLE, NC 27560
Contact
PHONE: 919. 460. 2943

D·R·HORTON America's Builder

PROJECT DIRECTORY

NORTH CAROLINA PROFESSIONAL SEAL 21543 ENGINEER BRADLEY A. RHINEHALT
PRELIMINARY NOT FOR CONSTRUCTION

REVISIONS

NO.	DATE	
1	02. 24. 2023	REVISED PER TOWN COMMENTS
2	06. 02. 2023	REVISED PER TOWN COMMENTS
3	08. 04. 2023	REVISED PER TOWN COMMENTS
4	10. 19. 2023	REVISED PER TOWN COMMENTS
5	11. 03. 2023	REVISED PER TOWN COMMENTS
6	12. 04. 2023	REVISED PER TOWN COMMENTS

SPECIAL USE PERMIT FOR:
COLLINS RIDGE - PHASE 2
258 ORANGE GROVE STREET
HILLSBOROUGH, NC
PROJECT NUMBER: DRH-21002

M:\Projects\DRH\DRH21002\04-Production\Engineering\Production Drawings\SUP 2\Current Drawings\Special Use Permit Drawings\DRH21002-CS1.dwg, 12/7/2023 1:27:52 PM, Dwayne Peterson

GENERAL NOTES:

1. ALL CONSTRUCTION SHALL CONFORM TO THE LATEST TOWN OF HILLSBOROUGH AND NCDOT STANDARDS AND SPECIFICATIONS UNLESS OTHERWISE NOTED. ALL WATER AND SEWER SHALL BE INSTALLED IN ACCORDANCE WITH TOWN OF HILLSBOROUGH WATER AND SEWER CONSTRUCTION SPECIFICATIONS, STANDARDS AND DETAILS LATEST EDITION.
2. OCCUPATIONAL SAFETY AND HEALTH ADMINISTRATION (OSHA) STANDARDS FOR EXCAVATIONS; FINAL RULE 29CFR PART 1926, SUBPART "P" APPLIES TO ALL EXCAVATIONS EXCEEDING FIVE (5) FEET IN DEPTH. EXCAVATION EXCEEDING TWENTY (20) FEET IN DEPTH REQUIRES THE DESIGN OF A TRENCH SAFETY SYSTEM BY A REGISTERED PROFESSIONAL ENGINEER, PROVIDED BY CONTRACTOR RESPONSIBLE FOR EXCAVATION.
3. CONTRACTOR SHALL MAINTAIN AN "AS-BUILT" SET OF DRAWINGS TO RECORD THE EXACT LOCATION OF ALL PIPING PRIOR TO CONCEALMENT. DRAWINGS SHALL BE GIVEN TO THE OWNER UPON COMPLETION OF THE PROJECT WITH A COPY OF THE TRANSMITTAL LETTER TO THE ENGINEER.
4. SOIL UNDER BUILDINGS AND PAVED AREAS SHALL BE COMPACTED TO STANDARD PROCTOR 98% DRY DENSITY OR AS RECOMMENDED BY THE GEOTECHNICAL ENGINEER.
5. THE CONTRACTOR SHALL NOTE THAT THE DRAWINGS MAY NOT SHOW EVERY OFFSET, TRANSITION, FITTING, ETC. THAT MAY BE REQUIRED. THE CONTRACTOR SHALL INSTALL SUCH STANDARD APPURTENANCES AS REQUIRED TO CLOSELY FOLLOW THE GRADES AND ALIGNMENTS DEPICTED ON THE PLANS.
6. CONTRACTOR SHALL NOTIFY "NC811" (811 OR 1-800-632-4949) AT LEAST 3 BUSINESS DAYS PRIOR TO BEGINNING CONSTRUCTION OR EXCAVATION TO HAVE EXISTING UTILITIES LOCATED. CONTRACTOR TO CONTACT ANY LOCAL UTILITIES THAT PROVIDE THEIR OWN LOCATOR SERVICES INDEPENDENT OF "NC811". REPORT ANY DISCREPANCIES TO THE ENGINEER IMMEDIATELY.
7. CONTRACTOR IS RESPONSIBLE FOR COORDINATING CONSTRUCTION ACTIVITIES WITH THE APPROPRIATE UTILITY COMPANIES FOR ANY REQUIRED RELOCATION (I.E. POWER POLES, TELEPHONE PEDESTALS, WATER METERS, ETC.).
8. EXISTING UTILITIES SHOWN ARE BASED ON PREVIOUSLY APPROVED PLAN PREPARED BY URBAN DESIGN PARTNERS AND MODIFICATIONS/ADDITIONAL PERMITS BY THE JOHN R. MCADAMS COMPANY. THE CONTRACTOR SHALL VERIFY CONDITIONS PRIOR TO BEGINNING CONSTRUCTION. ANY DISCREPANCIES BETWEEN ACTUAL FIELD CONDITIONS AND THE PLANS SHALL BE REPORTED TO THE ENGINEER IMMEDIATELY.
9. AS SHOWN ON FEMA FIRM PANEL 3710987400K (EFFECTIVE NOVEMBER 17, 2017), THE SITE DOES NOT CONTAIN A FEMA REGULATED SPECIAL FLOOD HAZARD AREA.
10. PEDESTRIAN WALKWAYS OUTSIDE OF THE PUBLIC RIGHT-OF-WAY WILL BE OWNED AND MAINTAINED BY HOMEOWNER'S ASSOCIATION.
11. 10-FOOT BY 70-FOOT SIGHT DISTANCE TRIANGLES WILL BE PLATTED AT ALL INTERSECTIONS.
12. BY ORANGE COUNTY ORDINANCE, CLEAN WOOD WASTE, SCRAP METAL AND CORRUGATED CARDBOARD, ALL PRESENT IN CONSTRUCTION WASTE, MUST BE RECYCLED.
13. BY ORANGE COUNTY ORDINANCE, ALL HAULERS OF CONSTRUCTION WASTE MUST BE PROPERLY LICENSED.
14. PRIOR TO ANY DEMOLITION OR CONSTRUCTION ACTIVITY ON THE SITE THE APPLICANT WILL HOLD A PRE-DEMOLITION/PRE-CONSTRUCTION CONFERENCE WITH THE COUNTY'S SOLID WASTE STAFF. THIS MAY BE THE SAME MEETING HELD WITH OTHER DEVELOPMENT OFFICIALS.
15. THE PRESENCE OF ANY ASBESTOS CONTAINING MATERIAL ('ACM') OR OTHER HAZARDOUS MATERIALS IN CONSTRUCTION AND DEMOLITION WASTE SHALL BE HANDLED IN ACCORDANCE WITH ANY AND ALL LOCAL, STATE, AND FEDERAL REGULATIONS AND GUIDELINES.
16. DRIVEWAY APRONS AND PORTIONS OF SIDEWALKS THRU DRIVEWAYS SHALL BE 6" THICK IN ACCORDANCE WITH NCDOT DETAIL 848.02 ON SHEET C8.00.
17. ALL DIMENSIONS SHOWN ON SITE PLAN ARE TO BACK OF CURB UNLESS OTHERWISE NOTED.
18. SEPARATE BUILDING PERMITS ARE REQUIRED FOR RETAINING WALLS, BOARDWALKS, BRIDGES, MONUMENTS, SIGNS, OR OTHER ACCESSORY STRUCTURES OR ELEMENTS. CONTACT THE ORANGE COUNTY INSPECTIONS AT (919)-245-2612.
19. EXISTING IMPROVEMENTS SLATED TO REMAIN THAT ARE DAMAGED DURING CONSTRUCTION SHALL BE REPLACED/RESTORED TO THEIR ORIGINAL CONDITION OR TO THE SATISFACTION OF THE OWNER BY THE CONTRACTOR RESPONSIBLE FOR THE DAMAGE.
20. ALL STREETS, PUBLIC AND PRIVATE, SHALL BE CONSTRUCTED TO MEET TOWN OF HILLSBOROUGH PUBLIC STREET REQUIREMENTS AS MODIFIED ACCORDING TO THE MASTER PLAN APPROVAL. A DIFFERENT DESIGN WILL REQUIRE A WAIVER FROM THIS PROVISION.

UTILITY NOTES

1. TOWN MATERIAL AND PRODUCT SPECIFICATIONS SHALL BR FOLLOWED. MATERIAL AND PRODUCT SUBMITTALS SHALL BE PROVIDED TO AND APPROVED BY THE DEVELOPER'S ENGINEER PRIOR TO CONSTRUCTION. UNAUTHORIZED MATERIALS AND PRODUCTS FOUND IN THE SYSTEM SHALL BE REPLACED WITH APPROPRIATE MATERIALS AND PRODUCTS AT THE DEVELOPER'S EXPENSE.
2. ALL WATER MAINS AND SEWER LINES PROPOSED BY THIS PROJECT ARE TO BE PUBLIC OWNED UPON DEDICATION BY THE OWNER AND ACCEPTANCE BY THE TOWN BOARD OF COMMISSIONERS.
3. ALL WATER AND SEWER SHALL BE INSTALLED IN ACCORDANCE WITH TOWN OF HILLSBOROUGH WATER AND SEWER CONSTRUCTION SPECIFICATIONS, LATEST EDITION, AND PER MODIFICATIONS ALLOWED ACCORDING THE THE MASTER PLAN.
4. THE TOWN INSPECTOR SHALL BE NOTIFIED 48 HOURS IN ADVANCE OF ANY FLUSHING, CHLORINATION, TAPPING, AND ACCEPTANCE TESTING. CONTRACTOR SHALL CONTACT LUCAS CATES: 919-296-9641 (lucas.cates@hillsboroughnc.gov).
5. ALL FLUSHING AND OTHER USE OF WATER FROM THE TOWN SYSTEM SHALL BE COORDINATED WITH THE TOWN ENGINEER OR UTILITY INSPECTOR. THE CONTRACTOR SHALL PAY FOR ALL WATER USED.
6. ALL UTILITIES (ELECTRIC, PHONE, GAS, CABLE, TV, ETC). SHALL BE INSTALLED A MINIMUM OF 3-FT HORIZONTALLY FROM ALL TOWN WATERLINES (EXISTING AND PROPOSED). WHERE OTHER UTILITIES ARE INSTALLED CLOSER OR CROSS WATER LINES, THEY SHALL BE INSTALLED IN RIGID CONDUIT. ELECTRICAL TRANSFORMERS, CABLE TV BOXES, AND TELEPHONE DISTRIBUTION BOXES SHALL NOT BE LOCATED ON THE SAME PROPERTY LINE AS WATER METERS.
7. NO WATER OR SEWER WORK SHALL BE COVERED UP UNTIL INSPECTED BY THE TOWN OR THE OWNER'S 3rd PARTY INSPECTOR. ALL MEANINGFUL WORK SHALL BE WITNESSED BY AN INSPECTOR AND DOCUMENTED AS TO PROPER INSTALLATION.
8. WATER
   - 8.1. WATER MAINS SHALL BE 8" UNLESS OTHERWISE NOTED.
   - 8.2. PROPOSED WATER MAINS SHALL BE DUCTILE IRON PIPE (DIP) PRESSURE CLASS 350 CEMENT MORTAR LINED INTERIOR / ASPHALTIC EXTERIOR. BEDDING SHALL BE AS RECOMMENDED BY THE MANUFACTURER. MAINS SHALL HAVE A MINIMUM BURIAL DEPTH OF 36-INCHES. POLYETHYLENE ENCASEMENT SHALL BE PROVIDED FOR DUCTILE IRON PIPE, WHERE NECESSARY, TO PREVENT CONTACT BETWEEN PIPE AND SURROUNDING MATERIAL AND UTILITIES TO PROTECT FROM CORROSIVE SOILS AND STRAY CURRENTS FROM OTHER UTILITIES. POLYETHYLENE ENCASEMENT SHALL BE IN ACCORDANCE WITH ANSI/AWWA C105.
   - 8.3. PROPOSED WATER SERVICES SHALL BE CLASS K COPPER OR CLASS 350 DIP FROM THE MAIN TO THE METER. CLASS K COPPER, CLASS 350 DIP, OR SCHEDULE 40 PVC IS ALLOWED FROM THE METER TO THE BUILDING.
   - 8.4. WATER TAPS SHALL BE A MINIMUM OF 1" FROM THE MAIN TO THE WATER BOX, WITH A REDUCER PRIOR TO THE METER BOX FOR 3/4" METERS.
   - 8.5. METERS SHALL BE SCHLUMBERGER NEPTUNE T-10 (<2"), TRU/FLO COMPOUND (2"-6") OR NEPTUNE HP TURBINE (8"-10") WITH AUTO-DETECT ARB AND R-900 MILI (RADIO READ) AND SHALL BE PURCHASED DIRECTLY FROM THE TOWN. FLANGED BRONZE STRAINERS BY NEPTUNE SHALL BE INSTALLED IMMEDIATELY BEFORE ALL 2" AND LARGER METERS WITH APPROPRIATELY SIZED SPACER INSTALLED BETWEEN THE STRAINER AND METER INACCURACIES.
   - 8.6. ALL WATER PIPING SHALL BE PRESSURE TESTED IN ACCORDANCE WITH AWWA C600 TO 200 PSI FOR A 2 HOUR PERIOD.
   - 8.7. FIRE HYDRANTS SHALL BE 5 1/4", DRY BARREL, AWWA C502, AS MANUFACTURED BY CLOW (MEDALLION), OR MUELLER SUPER CENTURION 250 HYDRANT. ALTERNATE MANUFACTURERS AND MODELS ARE NOT ACCEPTABLE WITHOUT PRE-APPROVAL FROM THE TOWN ENGINEER.
   - 8.8. RESILIENT WEDGE GATE VALVES (AWWA C509) AS MANUFACTURED BY CLOW (MEDALLION) OR MUELLER SHALL BE USED ON ALL WATER LINES. TWO VALVES SHALL BE INSTALLED AT ALL TEES, AND THREE VALVES AT ALL CROSSES.
   - 8.9. SINCE THE PROJECT IS TO BE CONSTRUCTED IN PHASES, TEMPORARY BLOW OFF ASSEMBLIES SHALL BE INSTALLED ON THE WATER LINES AT THE END OF ALL PHASES.
9. SEWER
   - 9.1 PUBLIC SEWER MAINS SHALL BE 8" UNLESS OTHERWISE NOTED.
   - 9.2 PROPOSED GRAVITY SEWER PIPING SHALL BE DUCTILE IRON PIPE (DIP) PRESSURE CLASS 350 EPOXY LINED INTERIOR / ASPHALTIC CAOSTED EXTERIOR (CONFORMING TO AWWA C150 AND AWWA C151 AND WITH RUBBER JOINTED GASKETS TO AWWA C111), OR SDR 35 PVC (PIPE AND FITTINGS MEETING ASTM 3034; GASKETS CONFORMING TO ATSM F477).
   - 9.3 SEWER DEEPER THAN 16 FEET SHALL BE DIP FOR THE ENTIRE LENGTH BETWEEN MANHOLES, WITH 5 FOOT DIAMETER MANHOLES REQUIRED. MANHOLES 20 FEET DEEP OR DEEPER SHALL BE 6 FOOT DIAMETER, AND REQUIRE TOWN APPROVAL.
   - 9.4 PIPE BEDDING SHALL BE AS RECOMMENDED BY THE MANUFACTURER, WITH CRUSHED STONE BEDDING REQUIRED FOR PVC PIPE.
   - 9.5 TRACE WIRE SHALL BE INSTALLED OVER SEWER MAIN ND SHELL BE #12 AWG COPPER CLAD STEEL, HIGH STRENGTH WITH MINIMUM 450 LB. BREAK LOAD, WITH MINIMUM 30 MIL HDPE INSULATION THICKNESS COLORED GREEN. ALL TERMINATION POINTS SHALL UTILIZE AN APPROVED TRACE WIRE ACCESS BOX, SPECIFICALLY MANUFACTURED FOR THIS PURPOSE.
10. UTILITY AND GRADING CONTRACTORS SHALL CALL "NC811" (811 OR 1-800-632-4949) AT LEAST 3 BUSINESS DAYS PRIOR TO BEGINNING CONSTRUCTION.
11. BACKFILL OF SEWER TO BE FREE OF DEBRIS, ORGANICS, STONES AND ORGANIC MATTER WITHIN 2' OF SEWER LINE AND BACK FILL MUST BE FREE OF ANY STONE LARGER THAN 6" ON ALONG ANY AXIS AT ANY BACKFILL DEPTH (MDC III.H.5)
12. SOIL CONTAINING BLASTED ROCK WILL NOT BE SUITABLE FOR BACKFILL OVER SEWER LINES BASED ON THE ABOVE CRITERIA.

GRADING NOTES

1. ALL DIMENSIONS AND GRADES SHOWN ON THE PLANS SHALL BE FIELD VERIFIED BY THE CONTRACTOR PRIOR TO CONSTRUCTION. CONTRACTOR SHALL NOTIFY THE ENGINEER IF ANY DISCREPANCIES EXIST PRIOR TO PROCEEDING WITH CONSTRUCTION, FOR NECESSARY PLAN OR GRADE CHANGES. NO EXTRA COMPENSATION SHALL BE PAID TO THE CONTRACTOR FOR ANY WORK DONE DUE TO DIMENSIONS OR GRADES SHOWN INCORRECTLY ON THESE PLANS IF SUCH NOTIFICATION HAS NOT BEEN GIVEN.
2. OCCUPATIONAL SAFETY AND HEALTH ADMINISTRATION (OSHA) STANDARDS FOR EXCAVATIONS; FINAL RULE 29CFR PART 1926, SUBPART "P" APPLIES TO ALL EXCAVATIONS EXCEEDING FIVE (5) FEET IN DEPTH. EXCAVATION EXCEEDING TWENTY (20) FEET IN DEPTH REQUIRES THE DESIGN OF A TRENCH SAFETY SYSTEM BY A REGISTERED PROFESSIONAL ENGINEER, PROVIDED BY CONTRACTOR RESPONSIBLE FOR EXCAVATION.
3. ALL CONSTRUCTION SHALL BE IN ACCORDANCE WITH THE TOWN OF HILLSBOROUGH AND/OR NCDOT STANDARDS AND SPECIFICATIONS AS APPLICABLE.
4. CONTRACTOR SHALL NOTIFY "NC811" (811) OR (1-800-632-4949) AT LEAST 3 FULL BUSINESS DAYS PRIOR TO BEGINNING CONSTRUCTION OR EXCAVATION TO HAVE EXISTING UTILITIES LOCATED. CONTRACTOR SHALL CONTACT ANY LOCAL UTILITIES THAT PROVIDE THEIR OWN LOCATOR SERVICES INDEPENDENT OF "NC811". REPORT ANY DISCREPANCIES TO THE ENGINEER IMMEDIATELY.
5. PRIOR TO BEGINNING CONSTRUCTION, THE GENERAL CONTRACTOR SHALL SCHEDULE AND ATTEND A PRE-CONSTRUCTION CONFERENCE WITH THE TOWN OF HILLBOROUGH PLANNING DEPARTMENT, TOWN OF HILLSBOROUGH STORMWATER, ORANGE COUNTY EROSION CONTROL DEPARTMENT, THE ENGINEER AND A REPRESENTATIVE OF THE OWNER.
6. CONSTRUCTION, MAINTENANCE AND REMOVAL OF ALL EROSION CONTROL DEVICES ARE THE RESPONSIBILITY OF THE GENERAL CONTRACTOR. TIMING OF REMOVAL SHALL BE COORDINATED WITH THE EROSION CONTROL INSPECTOR.
7. EXISTING UTILITIES AND STRUCTURES SHOWN, BOTH UNDERGROUND AND ABOVE GROUND, ARE BASED ON PREVIOUSLY APPROVED PLANS PREPARED BY URBAN DESIGN PARTNERS. THE CONTRACTOR SHALL VERIFY FIELD CONDITIONS PRIOR TO BEGINNING RELATED CONSTRUCTION. ANY DISCREPANCIES SHALL BE REPORTED TO THE ENGINEER IMMEDIATELY.
8. SOIL UNDER BUILDINGS, PAVED AREAS AND WITHIN SLOPES GREATER THAN 3:1 (H:V) SHALL BE APPROVED, PLACED AND COMPACTED AS RECOMMENDED BY THE GEOTECHNICAL ENGINEER.

STORM DRAINAGE NOTES

1. ALL STORM DRAINAGE PIPES SHOWN SHALL BE REINFORCED CONCRETE (RCP) (MINIMUM CLASS III) UNLESS NOTED OTHERWISE. CONTRACTOR TO COORDINATE WITH THE GEOTECH TO VERIFY TYPE OF BEDDING REQUIRED BASED ON SOIL CONDITIONS. CONTRACTOR TO SELECT REQUIRED CLASS OF PIPE BASED ON DEPTH OF PIPE AND BEDDING PROVIDED PER THE AMERICAN CONCRETE PIPE ASSOCIATION GUIDELINES.
2. ALL STORM DRAINAGE CONSTRUCTION SHALL BE IN ACCORDANCE WITH THE LATEST EDITION OF TOWN OF HILLSBOROUGH STANDARDS.
3. ALL CONCRETE SHALL MEET A MINIMUM 3000 PSI COMPRESSIVE STRENGTH.
4. ALL PIPE IN STORM DRAIN STRUCTURES SHALL BE STRUCK EVEN WITH INSIDE WALL.
5. ALL PIPE JOINTS SHALL BE MADE WITH PREFORMED JOINT SEALER, WHICH CONFORMS TO AASHTO SPECIFICATION M-198 FOR TYPE B FLEXIBLE PLASTIC GASKETS UNLESS OTHERWISE NOTED.
6. THE INTERIOR SURFACES OF ALL STORM DRAINAGE STRUCTURES SHALL BE POINTED UP AND SMOOTHED TO AN ACCEPTABLE STANDARD, USING MORTAR MIXED TO MANUFACTURER'S SPECIFICATIONS.
7. ALL BACKFILL SHALL BE NON-PLASTIC IN NATURE, FREE FROM ROOTS, VEGETATION MATTER, WASTE CONSTRUCTION MATERIAL OR OTHER OBJECTIONABLE MATERIAL. SAID MATERIAL SHALL BE CAPABLE OF BEING COMPACTED BY MECHANICAL MEANS AND SHALL HAVE NO TENDENCY TO FLOW OR BEHAVE IN A PLASTIC MANNER UNDER THE TAMPING BLOWS OR PROOF ROLLING.
8. MATERIALS DEEMED BY THE OWNER'S REPRESENTATIVE OR GEOTECH AS UNSUITABLE FOR BACKFILL PURPOSES SHALL BE REMOVED AND REPLACED WITH SUITABLE MATERIAL.
9. BACKFILLING OF TRENCHES SHALL BE ACCOMPLISHED IMMEDIATELY AFTER PIPE IS LAID. THE FILL AROUND THE PIPE SHALL BE THOROUGHLY COMPACTED TO 95 % OF THE MAXIMUM DRY DENSITY OBTAINABLE WITH THE STANDARD PROCTOR TEST. THE TOP EIGHT (8) INCHES SHALL BE COMPACTED TO 100 PERCENT STANDARD PROCTOR.
10. UNDER NO CIRCUMSTANCES SHALL WATER BE ALLOWED TO RISE IN UNBACKFILLED TRENCHES AFTER PIPE HAS BEEN PLACED.
11. ALL CONCRETE PIPE AND PRECAST STORM STRUCTURES SHALL MEET NCDOT STANDARDS BY MANUFACTURER.
12. CONTRACTOR SHALL BE RESPONSIBLE FOR CHECKING ALL PIPE AND STRUCTURES FOR CRACKS OR BREAKS, PRIOR TO INSTALLATION. ANY DAMAGED ITEMS SHALL NOT BE INSTALLED.
13. "KNOCK-OUT" BOXES OR HDPE PIPE SHALL NOT BE ALLOWED WITHIN PUBLIC RIGHT-OF-WAYS UNLESS APPROVED IN WRITING BY TOWN OF HILLSBOROUGH STORMWATER DEPARTMENT.
14. UPON COMPLETION OF THE STORMWATER SYSTEM IN PHASE 2, THE TOWN OF HILLSBOROUGH HAS REQUESTED VIDEO FOOTAGE OF ALL STORM PIPES FOR ACCEPTANCE. FOR CLARIFICATION, REACH OUT TO THE TOWN OF HILLSBOROUGH UPON FINALIZING ALL STORMWATER SYSTEM INSTALLATION.

RELATION OF WATER MAINS TO SEWERS

1. WATER MAINS SHALL BE LAID AT LEAST 10 FT. LATERALLY FROM EXISTING OR PROPOSED SEWERS, UNLESS LOCAL CONDITIONS OR BARRIERS PREVENT A 10 FT. LATERAL SEPARATION, IN WHICH CASE:
   - 1.1. THE WATER MAIN IS LAID IN A SEPARATE TRENCH, WITH THE ELEVATION OF THE BOTTOM OF THE WATER MAIN AT LEAST 18 IN. ABOVE THE TOP OF THE SEWER, OR,
   - 1.2. THE WATER MAIN IS LAID IN THE SAME TRENCH AS THE SEWER WITH THE WATER MAIN LOCATED AT ONE SIDE ON A BENCH OF UNDISTURBED EARTH, AND THE ELEVATION OF THE BOTTOM OF THE WATER MAIN AT LEAST 18 IN. ABOVE THE TOP OF THE SEWER.
   - 1.3. CROSSING A WATER MAIN OVER A SEWER - WHENEVER IT IS NECESSARY FOR A WATER MAIN TO CROSS OVER A SEWER, THE WATER MAIN SHALL BE LAID AT SUCH AN ELEVATION THAT THE BOTTOM OF THE WATER MAIN IS AT LEAST 18 IN. ABOVE THE TOP OF THE SEWER, UNLESS LOCAL CONDITIONS OR BARRIERS PREVENT AN 18 IN. VERTICAL SEPERATION - IN WHICH CASE BOTH THE WATER MAIN AND SEWER SHALL BE CONSTRUCTED OF FERROUS MATERIALS AND WITH JOINTS THAT ARE EQUIVALENT TO WATER MAIN STANDARDS FOR A DISTANCE OF 10 FT. ON EACH SIDE OF THE POINT OF CROSSING.
   - 1.4. CROSSING A WATER MAIN UNDER A SEWER - WHENEVER IT IS NECESSARY FOR A WATER MAIN TO CROSS UNDER A SEWER, BOTH THE WATER MAIN AND THE SEWER SHALL BE CONSTRUCTED OF FERROUS MATERIALS AND WITH JOINTS EQUIVALENT TO WATER MAIN STANDARDS FOR A DISTANCE OF 10 FT. ON EACH SIDE OF THE POINT OF CROSSING. A SECTION OF WATER MAIN PIPE SHALL BE CENTERED AT THE POINT OF CROSSING.
2. CROSSING A SEWER LINE OVER OR UNDER A STORM DRAIN - WHENEVER IT IS NECESSARY FOR A SEWER LINE TO CROSS A STORM DRAIN PIPE, THE SEWER LINE SHALL BE LAID AT SUCH AN ELEVATION THAT THE OUTSIDE OF THE SEWER LINE NEAREST TO THE OUTSIDE OF THE STORM DRAIN PIPE SHALL MAINTAIN A 24 IN. CLEAR SEPARATION DISTANCE, OR THE SEWER LINE SHALL BE CONSTRUCTED OF DUCTILE IRON PIPE, OR ENCASED IN EITHER CONCRETE OR DUCTILE IRON PIPE FOR AT LEAST 5 FT. ON EITHER SIDE OF THE CROSSING.

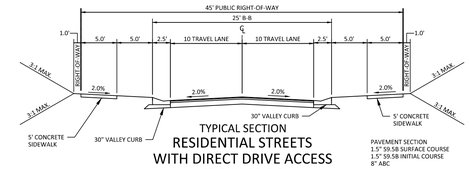

TYPICAL SECTION
RESIDENTIAL STREETS
WITH DIRECT DRIVE ACCESS
(45' R/W, 25' B-B)
OPEN AIR LANE AND LIGHT FOOT LANE

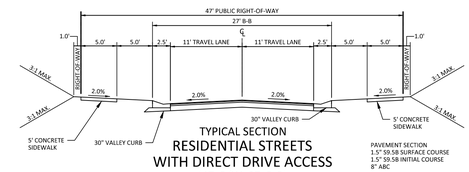

TYPICAL SECTION
RESIDENTIAL STREETS
WITH DIRECT DRIVE ACCESS
(47' R/W, 27' B-B)
STREET "A" AND STREET "B"

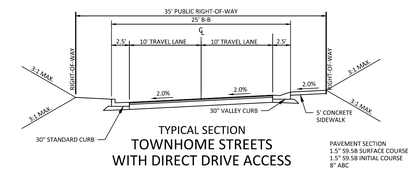

TYPICAL SECTION
TOWNHOME STREETS
WITH DIRECT DRIVE ACCESS
(35' R/W, 25' B-B)
STREET "C"

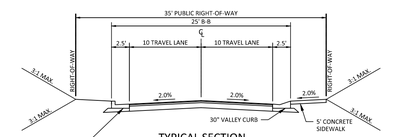

TYPICAL SECTION
GOLD HILL WAY EXTENSION
WITH DIRECT DRIVE ACCESS
(VARIABLE WIDTH R/W)

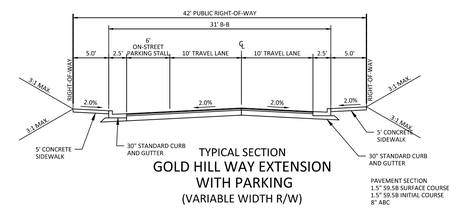

TYPICAL SECTION
GOLD HILL WAY EXTENSION
WITH PARKING
(VARIABLE WIDTH R/W)

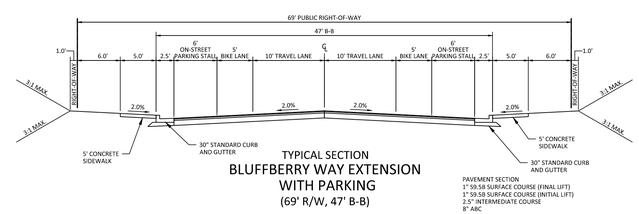

TYPICAL SECTION
BLUFFBERRY WAY EXTENSION
WITH PARKING
(69' R/W, 47' B-B)

811
Know what's below.
Call before you dig.

CONTRACTOR SHALL NOTIFY "NC811" (811) OR (1-800-632-4949) AT LEAST 3 FULL BUSINESS DAYS PRIOR TO BEGINNING CONSTRUCTION OR EXCAVATION TO HAVE EXISTING UTILITIES LOCATED. CONTRACTOR SHALL CONTACT ANY LOCAL UTILITIES THAT PROVIDE THEIR OWN LOCATOR SERVICES INDEPENDENT OF "NC811". REPORT ANY DISCREPANCIES TO THE ENGINEER IMMEDIATELY.

ALL CONSTRUCTION SHALL BE IN ACCORDANCE WITH THE CURRENT TOWN OF HILLSBOROUGH AND NCDOT STANDARDS, SPECIFICATIONS, AND DETAILS.

PRELIMINARY DRAWING - NOT RELEASED FOR CONSTRUCTION

MCADAMS
The John R. McAdams Company, Inc.
2905 Meridian Parkway
Durham, NC 27713

phone 919. 361. 5000
fax 919. 361. 2269
license number: C-0293, C-187

www.mcadamsco.com

CLIENT

DR HORTON
2000 AERIAL DRIVE
MORRISVILLE, NC 27560
Contact
PHONE: 919. 460. 2943

D·R·HORTON
America's Builder

COLLINS RIDGE - PHASE 2
SPECIAL USE PERMIT
258 ORANGE GROVE STREET
HILLSBOROUGH, NC

NORTH CAROLINA PROFESSIONAL SEAL 21543 ENGINEER BRADLEY A. RHINEHART
PRELIMINARY NOT FOR CONSTRUCTION

REVISIONS

NO.	DATE	
1	02. 24. 2023	REVISED PER TOWN COMMENTS
2	06. 02. 2023	REVISED PER TOWN COMMENTS
3	08. 04. 2023	REVISED PER TOWN COMMENTS
4	10. 19. 2023	REVISED PER TOWN COMMENTS
5	11. 03. 2023	REVISED PER TOWN COMMENTS
6	12. 04. 2023	REVISED PER TOWN COMMENTS

PLAN INFORMATION

PROJECT NO.	DRH-21002
FILENAME	DRH21002-N1
CHECKED BY	DLP
DRAWN BY	SJB
SCALE	NTS
DATE	10. 17. 2022

SHEET

NOTES

C0.01

M:\Projects\DRH\DRH21002\04-Production\Engineering\Production Drawings\SUP 2\Current Drawings\Special Use Permit Drawing\DRH21002-N1.dwg, 12/1/2023 1:28:03 PM, Dwayne Peterson

COLLINS RIDGE
CONDITIONS OF APPROVAL (AMENDED 10/11/2021 & 06/12/2023)

Statement of Intent Applicable Generally to the Master Plan

Collins Ridge Master Plan ("Collins Ridge") is proposed to provide a residential community with a mix of housing styles designed to comply with the Town of Hillsborough's ("Town") Future Land Use Plan, respect the visual character of its site, minimize environmental impacts and maximize water and energy conservation principles. This proposal meets the requirements of the Future Land Use Plan, which designates the property subject to the Collins Ridge Master Plan for "Mixed Residential Neighborhood". Further, Hillsborough Vision 2030 encourages development that is compatible with the special character of Hillsborough. Collins Ridge strives to be an integral part of the unique Town of Hillsborough.

The site is situated between Highway 70 to the north, the North Carolina Railroad to the east and north, I-85 to the south and South Churton Street to the west. The property subject to the Collins Ridge Master Plan is well-located to provide a mix of residential land use designed to support existing and planned retail and other commercial land uses on the Daniel Boone property, and the nearby rail station and community park.

To the extent not specifically addressed in the Collins Ridge Master Plan, or otherwise required by the Town Unified Development Ordinance to be addresses as a part of the Special Use permit process, the developer of the Collins Ridge project, its successors and assigns, shall explain specifically the manner in which the design for improvements on each Parcel address the following issues at the time that application for Special Use Permits are submitted to the Town for each Parcel depicted in Collins Ridge Master Plan: (1) site lighting; (2) whether and how on-street parking should be accommodated; (3) emergency vehicle access to the site; (4) buffering between different land uses; and (5) street design within the parcel; (6) connectivity (vehicular and pedestrian) within the parcel and among neighboring parcels; (7) building and site design on the site; (8) location, specific design, and timing of construction of recreation features and amenities; signage for and within parcels, including location and design; (9) compliance with applicable master regulations applicable to the parcel and/or to the Property as a whole; (1) buffers and setbacks within parcels .

General Conditions Applicable to the Entire Project

1. Land Uses. The following land uses shall be permitted within Collins Ridge, and all uses shall be permitted on all Parcels:

   - Dwelling;
   - Dwelling, Attached, including Townhomes and other attached dwellings (all uses in this category may be traditional, age-restricted and age-targeted dwellings);
   - Dwelling, Multi-family, including Condominiums and Apartments dwellings (all uses in this category may be traditional, age-restricted and age-targeted dwellings
   - Dwelling, Single-family Detached;
   - Attached and detached garages;
   - Community Garden;
   - Park, Athletic or Community;
   - Park, Cultural or Natural;
   - Park, Neighborhood;
   - Passive Recreation Area;
   - Public Utilities;
   - Private Utilities, including stormwater and erosion control devices;
   - Public and private streets, private alleys, sidewalks, trails, and paths;
   - Recreational Facilities;
   - Community pool, Community Center, tennis courts, volleyball courts and other recreational amenities generally associated with residential communities;
   - Health/Fitness Club for exclusive use of Collins Ridge residents, and operated by developer or one or more homeowner's associations; and
   - Any and all other uses ancillary to or supportive of a residential subdivision.

2. Density: No more than 950 dwelling units, plus a minimum of 60 and a maximum of 88 Affordable Housing Units, shall be permitted on the property subject to the Collins Ridge Master Plan.

3. Affordable Housing. The Collins Ridge Master Plan provides for a range of housing types at varying price points. The availability of single-family homes, townhomes and multi-family units is naturally conducive to affordable housing as these varying home types and sizes will appeal to residents with a range of incomes and housing needs.

   In order to provide additional opportunities for housing for Low-Income Households ("Affordable Housing"), as defined by the North Carolina Housing Coalition below, the developer shall offer to donate and convey without charge at least three (3) acres of land available to support eighty-eight (88) multi-family dwellings to CASA or its assignee at a mutually agreeable location with a deed restriction ensuring the property will be used for Affordable Housing for Low-Income Households ("Affordable Housing Property"). Specifically, the deed into CASA for the Affordable Housing Property shall require each of the following: (i) the parcel be used for a minimum of sixty (60) and a maximum of eighty-eight (88) Affordable Housing units, including but not limited to Veterans with Disabilities; (ii) CASA, or its assignee, shall accept all types of rental subsidies; (iii) CASA, or its assignee, will apply for federal and/or state funding for construction within two (2) years of receipt by CASA of fee title to the property; (iv) that CASA will use its best efforts to obtain funding for construction of rental units as described above; and (v) if CASA has not received at least one building, grading or other related construction permit on the fifth (5th) anniversary of the date CASA takes owner ship of the Affordable Housing

   Property ownership of the parcel shall, at the Town of Hillsborough's formal written request and at no cost to the town of Hillsborough, be transferred to the Town of Hillsborough. The Developer shall provide the Town with a copy of the recorded deed

of the property conveyed to CASA within thirty (30) of recordation on the deed.

The developer and CASA may agree to a different location (as generally depicted on the attached sketch plan) for the Affordable Housing Property outside the boundary of Collins Ridge as shown on the current Collins Ridge Master Plan if such location better meets the criteria of the Low-Income Housing Tax Credit program. In that event, the declaration of restrictions and covenants for Collins Ridge must specifically and irrevocably include the substitute location so residents of the Affordable Housing Property have full rights as if they were residents within the Collins Ridge. Deed restrictions shall also be applied to the substitute parcel to ensure the conditions listed in paragraph 2 above, the commitment of CASA or its assignee to pay a fair share of the assessments and dues to the association, and the commitment of CASA or its assignee to participate and maintain membership in the association.

The developer of Collins Ridge, and its successors or assigns, shall ensure that the Affordable Housing Property, whether on-site or off-site, has vehicular and pedestrian access to public streets and on-site access to all public utilities that are available to the remainder of the Collins Ridge Community. The design and location of such vehicular and pedestrian access must be approved by the Town under the specified review process at the time of review. CASA or its assigns commits that the design of amenities and landscape features on the Affordable Housing Property shall be consistent with and of quality and quantity equal to all other parcels in Collins Ridge. The Affordable Housing Property shall be conveyed to CASA at no cost by October 31, 2023. ***(Condition amended 6/12/2023)***

The developer of Collins Ridge shall ensure that the Affordable Housing Property to be conveyed to CASA (or its assignee), or to the Town of Hillsborough in the even that CASA has not received its first construction permit by the fifth anniversary date of the date CASA takes ownership of the Affordable Housing Property, shall be fully integrated into the Collins Ridge Community so that residents of Affordable Housing units shall have access to all amenities in Collins Ridge on the same basis and to the same extent as all other residents of Collins Ridge.

CASA, or its assignees, shall be responsible for constructing, managing and maintaining the dwelling units, including submitting and obtaining development approval for development of the site.

The definition of the term "Low-Income Households" is derived from the North Carolina Housing Coalition and set out in its entirety below.

Low-Income Household(s) – Household(s) whose income does not exceed Eighty Percent (80%) of the median income for the area as determined by HUD. ***(Condition amended 10/11/2021)***

4. Conservation Measures. The following conservation measures shall apply to the property within the Collins Ridge Master Plan:

   a. All dwelling units shall be constructed with Energy Star Appliances, with the exception of ovens, ranges and microwave ovens which are not rated by Energy Star at this time.

   b. To encourage water conservation, all dwelling units shall be constructed with WaterSense Certified High Efficiency Toilets (1.28 GPF), or equivalent.

   c. To ensure compliance with the North Carolina State Building Code, each application for a certificate of occupancy for a home subject to the One or Two Family Building Code, shall submit a photograph or copy of a certificate confirming that the dwelling unit has passed a blower door test or a duct leakage test.

   d. Solar panels will be offered as an option at the time of purchase for all single-family home and townhomes within Collins Ridge Community. Solar panels will be available to apartment developers at the time of construction.

   e. Landscape materials planted within street rights-of-way, in open space or in common areas shall meet the following requirements:

      i. Planting shall be made in accordance with the requirements and specifications of the Town's Administrative Manual. Plant materials shall be chosen to thrive based on their exposure to sun, wind, and soil conditions.

      ii. All landscape beds shall provide a 3" layer of mulching material.

      iii. Plants shall be grouped according to water needs, or "hydrozones," to limit overwatering.

      iv. All landscaping in the public right-of way shall be maintained by the Developer or by a property owners' association for the Collins Ridge Master Plan Property, and/or for the Parcel within which the landscaping is situated.

      v. Landscaping shall not be planted within public water or sewer utility easements. Due to an existing utility easement and sewer infrastructure in place along the western boundary of Collins Ridge, the applicant shall be permitted to install a modified Type A1 buffer in Phase 2 between Open Air Lane and Gold Hill Way. The planting rate for the Type A buffer will be modified to include 10 mid-sized or small shrubs per 100 linear feet of buffer. All shrubs used will be of a species that will provide a visually opaque screen of at least six feet and deter pedestrian access through the buffer. ***(Condition amended 6/12/2023)***

   f. Installation of landscaping on residential lots as a part of the initial construction process shall meet the following requirements:

      i. Planting shall be made in accordance with the Town's Administrative Manual. Plant materials shall be chosen to thrive based on their exposure to sun, wind, and soil conditions.

      ii. All landscape beds shall provide a 3" layer of mulching material.

      iii. Plants shall be grouped according to water needs, or "hydrozones," to limit overwatering.

5. Open Space. At least ten percent (10%) of the property that is subject to the Collins Ridge Master Plan shall be open space.

6. Community Amenities. The following amenities shall be provided:

   a. Town Park. The developer shall dedicate to the Town of Hillsborough a 12.45 ac tract, south of I-85, and as shown in the Master Plan Amendment Exhibit Map dated 5/26/23 as 'New Park Location' to satisfy the original 2-acre Town Park dedication requirement, within 24 (twenty-four) months from the date of this approved Master Plan amendment.

      The developer also shall dedicate to the Town of Hillsborough the remaining .7 ac portion of the former proposed 2-acre public park site along Gold Hill Way within 24 (twenty-four) months from the date of this approved Master Plan amendment. ***(Condition amended 6/12/2023)***

   b. Community Center. The developer shall construct a community center building at least 3,000 square feet in size, including at least one meeting room, a catering kitchen, an outdoor swimming pool at least 2,500 square feet in size, two tennis courts, restroom/changing rooms and twenty (20) parking spaces to serve the townhome and single-family homes. The Community Center tract shall be at least 3 acres in size. The Community Center shall be completed prior to the issuance of a certificate of occupancy for the 300th townhome and/or single family detached home in Collins Ridge (it being the intent that apartment units are not counted for purposes of this subparagraph because apartment units will have some recreational amenities incorporated into their design as required by subparagraph d below).

   c. Neighborhood Parks. The developer shall construct at least six (6) neighborhood parks one (1) within each of the six Parcels (A-F) in Collins Ridge Community. At least three (3) of the neighborhood parks shall include fenced children's playgrounds. Each park shall be at least one-quarter (1/4) acre in size. The timing of the construction and completion of the required neighborhood park within each parcel shall be determined during the special use permit process that Parcel. Neighborhood parks may be provided in combination with Recreational Amenities in Apartment Complexes. Although the general location of neighborhood parks are shown on Exhibit 9, entitled Proposed Master Plan, the final location of each neighborhood park shall be determined during the Special Use Permit review and approval process for the Parcel in which each park is located.

   d. Additional Recreational Amenities for Apartment Complexes. Each apartment complex shall provide at least one (1) additional recreational amenity, such as a swimming pool, playgrounds, play field or play court, as a part of the apartment complex. Neighborhood Parks may be provided in combination with Recreational Amenities in Apartment Complexes.

   e. Sidewalks. Sidewalks meeting Town of Hillsborough standards shall be provided on both sides of all public streets. At least 9,600 linear feet (1.8± miles) of public sidewalk shall be provided within Collins Ridge.

   f. Walking/Biking Trails. The developer shall construct at least 6,000 linear feet (1.1± miles) of walking/biking trails, in addition to sidewalks. Walking/biking trails shall be constructed generally as shown on the "Collins Ridge Multi-Use Path Map", dated October 1, 2021 and part of the October 11, 2021 amendment to the master plan. The final path alignment shall be shown on construction drawings reviewed and approved by the Town of Hillsborough prior to trail development. The developer and the Town may agree to minor trail location modifications that provide a superior product for the town prior to development. Walking/biking trails shall be at least ten feet (10') wide and constructed of asphalt in accordance with Town of Hillsborough greenway standards, including the Access Board Guidelines. Walking/biking trails located within the perimeter buffer of Collins Ridge shall be dedicated to the Town of Hillsborough and accepted by the Town of Hillsborough for maintenance. This trail shall be constructed and ready for dedication prior December 31, 2027. ***(Condition amended 10/11/2021)*** In order to provide the required walking/biking trails the developer shall be permitted to grade and clear within the 100' perimeter buffer as needed to facilitate construction of the proposed multiuse path, including construction of retaining walls and boardwalks needed due to grade and topography. Developer shall still be responsible for the adherence to all applicable buffer planting requirements. ***(Condition amended 6/12/2023)***

   g. Bicycle Racks. In order to encourage the use of bicycles within the community, the developer shall provide at least twelve (12) total Bike Rack Stations located at the community center, apartment complexes, parks and transit stops throughout the Collins Ridge Community. Each Bike Rack Station shall contain parking for at least six (6) bicycles.

   h. Transit/Bus Stops. The developer shall provide easements to the Town of Hillsborough, or to Go Triangle or another public entity which provides public transportation services in the area, for at least three (3) transit stops measuring at least twenty feet by fifteen feet (20' x 15') (the specific design and location of each transit stop shall be determined during the Special Use Permit review and approval process for the Parcel within which, or adjacent to which, the transit stop is to be located) prior to issuance of the first certificate of occupancy for the first dwelling unit in the Parcel associated with the transit stop. The developer shall install a bench (to be designed and installed in accordance with approved Town of Hillsborough standards) at each transit stop location. Although the general location of transit stops are shown on Exhibit 9, entitled Proposed Master Plan, the transit stops may be

relocated during the Special Use Permit process for that Parcel to another location along the main spine road.

7. Public Water and Sewer. All property subject to the Collins Ridge Master Plan shall be served by public water and sewer subject to availability of capacity in accordance with the terms of a Water and Sewer Agreement to be negotiated between Collins Ridge and the Town.

8. Street and Pedestrian Circulation. The following streets and pedestrian walkways shall be provided within the Collins Ridge Master Plan:

   a. Streets within the Collins Ridge Master Plan shall be built to the standards shown on Exhibit 13 of the Collins Ridge Master Plan, entitled "Proposed Street Sections". Developer shall be permitted to apply alternative street cross sections to match those that were approved as part of the 'Collins Ridge Revision to Special Use Permit Drawings– Phase 1' dated December 8, 2017 (SUP 1) along Open Air Lane, Lightfoot Lane, Gold Hill Way, Poet Pointe, and Flat Ford Road as shown in the Master Plan Amendment Exhibit Map dated 5/26/23. ***(Condition amended 6/12/2023)***

   b. The street network shall be designed to provide interconnection between and among the various parcels that make up the Collins Ridge Master Plan.

   c. Cul-de-sacs shall not be permitted on the public streets within the Collins Ridge Master Plan except for "stub" streets and any town required turn-arounds. Open Air Lane shall be permitted to "stub" short of the Collins Ridge western property boundary (but shall be constructed as closely as feasible without requiring off-site easements) with a payment in lieu of construction paid to the Town of Hillsborough for the unconstructed portion of Open Air Lane if the following steps are taken:

      - The developer shall reach out to the adjacent property owner (Boone Square Incorporated) to negotiate purchase of easements needed to support construction of Open Air Lane to the Collins Ridge western property boundary.
      - If said negotiations do not result in an agreement for easement acquisition (negating the need for a payment in lieu request), the developer shall obtain a Third-Party appraisal for the fair market value of the easements and provide the Town with evidence of their easement purchase offer (meeting or exceeding fair market value), a copy of the appraiser's report, and an engineer's estimate of the construction cost to complete the unconstructed portion of Open Air Lane.
      - A fee in lieu payment in the amount of 150% of the engineer's construction estimate (to be reviewed and verified by Town of Hillsborough staff) shall be provided prior to final plat approval of this phase. The acceptance of this fee in lieu payment does not negate the developer's responsibility to dedicate necessary Right-of-way to the property line and provide any necessary

construction easements within Collins Ridge to support the future connection of Open Air Lane. ***(Condition amended 6/12/2023)***

   d. Prior to the issuance of the first Special Use Permit in the Collins Ridge Master Plan property, the developer shall secure an irrevocable legal right to provide a second permanent vehicular and pedestrian access point in a location acceptable to the Town's consulting traffic/transportation consultant and to NCDOT, connecting the main north- south "spine" road on Collins Ridge Master Plan property to Churton Street in Phase 2 of the Collins Ridge Master Plan generally as shown on Exhibit 11, entitled Phasing Plan, in addition to the primary access shown on Proposed Collins Ridge Master Plan map from Orange Grove Road. The second permanent access does not need to be constructed at the time of issuance of the first special use permit in Collins Ridge. The second permanent access must be constructed and available for use prior to the issuance of a zoning compliance permit for the first dwelling unit within SUP 2/Phase 2. ***(Condition amended 6/12/2023)***

   e. The developer shall be permitted to construct 450 dwelling units within Phase I of Collins Ridge Master Plan generally as shown on Exhibit 11, entitled Phasing Plan, provided that the following access points are constructed: a permanent access from Orange Grove Road into Collins Ridge (as currently contemplated by NCDOT TIP Project No. U-5848) and a second temporary access through the power line easement to Churton Street at least twenty feet (20') wide and graveled in accordance with Town Standards. The developer shall be required to maintain the secondary temporary access easement in good condition, satisfactory to the Town of Hillsborough Fire Marshall, the Town of Hillsborough Police Department and the Fire Department serving the Collins Ridge Master Plan property. Should the Developer fail to adequately maintain the easement, then the Town may suspend the issuance of permits or certificates of occupancy for new dwelling units until the condition of the temporary access easement is restored or until another secondary access acceptable to the Town has been provided.

   f. Prior to the issuance of the zoning compliance permit for the first dwelling unit in SUP 2/Phase 2, the developer shall install the 2018 road improvement recommended in Section X entitled "Recommendations" of the CRTIA unless these improvements are required to be installed earlier by the North Carolina Department of Transportation. ***(Condition amended 6/12/2023)***

   g. Prior to the issuance of the final 5 (five) Certificates of Occupancy for SUP 2/Phase 2, the developer shall install the 2022 road improvements recommended in Section X entitled "Recommendations" of the CRTIA unless these improvements are required to be installed earlier by the North Carolina Department of Transportation.

      As part of these improvements the stormwater system at Churton Street and James J. Freeland Memorial Drive shall be evaluated for correct sizing and brought up to Town standards along with the requirements of the TIA Phasing Letter from NCDOT dated February 4, 2017 for Phase 2 (2022-full build out). ***(Condition amended 6/12/2023)***

   h. The developer shall submit construction drawings to the Town for review and approval prior to commencement of construction of the public spine street for Collins Ridge which is generally depicted on Exhibit 12 ("Connectivity Plan – Collins Ridge"). The spine street shall be completed up to the point of secondary temporary access easement as described in Section 8(e) prior to the issuance of any certificate of occupancy in Collins Ridge. The timing of construction and completion of the remainder of the spine street shall be determined during the special use permit process for each Parcel located south of the temporary access easement (Parcels B, C, D and E). The public spine street generally as shown on Exhibit 12, entitled Connectivity Plan Collins Ridge, shall be constructed within at least a fifty-nine foot (59') right-of-way along the common boundary line of Parcels D and E ending in a stub one hundred feet (100') from the right-of-way for Interstate 85 for the purpose of construction by the Town of Hillsborough of a public street to the south and across Interstate 85 connecting to the existing street network prior to the issuance of a building permit in Parcel D. In addition, the developer shall reserve a strip of land at least fifty-nine (59') feet wide from the end of the public spine street to the right-of-way for Interstate 85 until the issuance of a building permit in Parcel D for the Town of Hillsborough to be used as right-of-way for a possible crossing of Interstate 85. The applicant shall not be required to construct a street within this reserved strip of land, nor shall the applicant be required to install a bridge, tunnel or other crossing over or under Interstate 85.

   i. The developer acknowledges that the North Carolina Department of Transportation ("NCDOT") engaged in redesign projects along South Churton Street and along the North Carolina Railroad line adjacent to, and running generally north and east of, the Collins Ridge property. This design process resulted in additional ROW dedication along the eastern boundary of POD E and POD F, effectively reducing the boundary of each POD from what was originally planned and represented in Exhibit 9. ***(Condition amended 6/12/23)***

9. Voluntary Annual Contributions. The developer shall make the following voluntary contributions to equitably offset the initial impact of the Collins Ridge project upon the Town's obligation to provide public utilities, police and fire protection, taking into account the improvements and other benefits provided by the Collins Ridge project:

   Public Safety Capital Contribution: Three (3) annual contributions totaling $235,440.00 shall be made to the Town of Hillsborough to defray the cost of providing public safety services to the property subject to the Collins Ridge Master Plan. The developer shall make an initial contribution of $78,480.00 within thirty (30) days of approval of the first Special Use Permit on property subject to the Colling Ridge Master Plan. Thereafter, contributions of $78,480.00 shall be made annually on the anniversary date of the initial contribution for a total contribution of $235,440.00.

   To secure payment of the voluntary contributions described above, the property owner shall provide an irrevocable letter of credit issued by a financial institution acceptable by Town of Hillsborough in a from acceptable to the Town of Hillsborough in the amount of $156,960.00 simultaneously with the first annual payment of $78,480.00.

   The amount of this letter of credit shall be reduced in an amount equal to each contribution made by the property owner to Town of Hillsborough within thirty (30) days after each contribution in received by the Town.

   Sewer Flow Monitoring: To defray the cost of sewer flow monitoring, the developer shall make a contribution of $15,000 toward sewer flow monitoring equipment within thirty (30) days of approval of this Master Plan Amendment (brought before the Town of Hillsborough Board of Commissioners on 6/12/23). ***(Condition amended 6/12/2023)***

10. Stormwater Facilities. All stormwater control devises to be located on the property subject to the Collins Ridge Master Plan shall be reviewed and approved by the Town prior to construction, but shall remain the property and maintenance responsibility of the developer, or in its sole discretion, a property owner and/or tenants' association to be established by the developer. In addition, the developer shall comply with all Federal, state and local stormwater regulations, including riparian buffer regulations. The developer shall submit to the Town for its prior approval proposed conditions and covenants addressing continuing operation and maintenance of all stormwater control measures. The conditions and covenant shall include provisions authorizing the Town to perform maintenance of such facilities and to charge the cost thereof against the developer or property owners' or tenants' association(s) in the event that they fail to properly and timely maintain the stormwater control measures.

11. Informal Concept Plan Submission. The developer shall submit to the Town a concept plan for informal review by the Planning Director or her designee prior to submitting a formal application for Special Use Permit for any Parcel as shown on the Collins Ridge Master Plan.

12. Assignment of Rights and Obligations. The developer shall be entitled to assign the rights and obligations contained in Collins Ridge Master Plan and these Conditions of Approval to subsequent purchasers of any portion of the property subject to the Collins Ridge Master Plan, provided that any subsequent purchasers must acknowledge in writing to the Town that they have acquired the property, or any portion thereof, subject to the obligations and conditions stated in the Collins Ridge Master Plan and these Conditions of Approval and that they agreed to be bound by them.

13. Restrictive Covenants. Prior to recording any restrictive covenants or any other document intended to affect development on any portion of the property subject to the Collins Ridge Master Plan (the "Restrictive Covenants"), the developer or any other subsequent owner of any portion of the property subject to the Collins Ridge Master Plan shall first submit the Restrictive Covenants to the Town for review.

14. Vested Rights. A vested right pursuant to G. S. 160A-385.1 and Section 1.8 of the Town of Hillsborough Unified Development Ordinance is established as of the date hereof. The vested right arising from the approval of this Collins Ridge Master Plan shall be valid for five years from the date of approval, unless such date is formally extended by the Town Board prior to its expiration.

ALL CONSTRUCTION SHALL BE IN ACCORDANCE WITH THE CURRENT TOWN OF HILLSBOROUGH AND NCDOT STANDARDS, SPECIFICATIONS, AND DETAILS.

PRELIMINARY DRAWING - NOT RELEASED FOR CONSTRUCTION

MCADAMS
The John R. McAdams Company, Inc.
2905 Meridian Parkway
Durham, NC 27713

phone 919. 361. 5000
fax 919. 361. 2269
license number: C-0293, C-187

www.mcadamsco.com

CLIENT

DR HORTON
2000 AERIAL DRIVE
MORRISVILLE, NC 27560
Contact
PHONE: 919. 460. 2943

D·R·HORTON
America's Builder

COLLINS RIDGE - PHASE 2
SPECIAL USE PERMIT
258 ORANGE GROVE STREET
HILLSBOROUGH, NC

NORTH CAROLINA PROFESSIONAL SEAL 21543 ENGINEER BRADLEY A. RHINEHART
NOT FOR CONSTRUCTION

REVISIONS

NO.	DATE	
1	02. 24. 2023	REVISED PER TOWN COMMENTS
2	06. 02. 2023	REVISED PER TOWN COMMENTS
3	08. 04. 2023	REVISED PER TOWN COMMENTS
4	10. 19. 2023	REVISED PER TOWN COMMENTS
5	11. 03. 2023	REVISED PER TOWN COMMENTS
6	12. 04. 2023	REVISED PER TOWN COMMENTS

PLAN INFORMATION

PROJECT NO.	DRH-21002
FILENAME	DRH21002-N2
CHECKED BY	DLP
DRAWN BY	SJB
SCALE	NTS
DATE	10. 17. 2022

SHEET

CONDITIONS OF APPROVAL

C0.02

M:\Projects\DRH\DRH21002\04-Production\Engineering\Production Drawings\SUP 2\Current Drawings\Special Use Permit Drawing\DRH21002-N2.dwg, 12/1/2023 1:28:19 PM, Dwayne Peterson

15. Compliance with Unified Development Ordinance. The Collins Ridge Master Plan was submitted to the Town in compliance with the requirements of Section 3.7 of the Town of Hillsborough's Unified Development Ordinance. Prior to development of any specific Parcel shown on Collins Ridge Master Plan, a Special Use Permit Application for that Parcel shown on the Collins Ridge Master Plan will be submitted to Town in accordance with the applicable provisions of the Town Unified Development Ordinance in effect at the time the application is made; provided, however, that in the event that there are inconsistences between the Town Unified Development Ordinance and the Collins Ridge Master Plan at the time any Special Use Permit application is submitted, the terms of the Collins Ridge Master Plan shall control. The requirements of section 3.8.3 of the Town Unified Development Ordinance shall be addressed in detail for each specific Parcel shown on the Collins Ridge Master Plan at the time a Special Use Permit application for each parcel is submitted to the Town for approval.

16. Lot Width Variation. Within the Collins Ridge Master Plan each block of single-family homes longer than 400 feet shall have at least 2 (two) different lot widths on each street section. Every third lot must contain a lot width variation of at least 10 feet from its adjacent lots. Lots shall have a minimum width of 30 feet. ***(Condition added 6/12/2023)***

17. Developer shall complete, certify and make submittals for town acceptance of all public sidewalk, street, greenways built to this point, and utility infrastructure, and shall install all landscaping, street trees and stormwater conveyances in Phase 1A before a zoning compliance permit will be issued for the 9th dwelling unit in SUP 2/Phase 2. ***(Condition added 6/12/2023)***

18. Developer shall complete, certify and make submittals for town acceptance of all public sidewalk, street, greenway and utility infrastructure, and shall install all landscaping, street trees and stormwater conveyances in all sections and phases before the zoning compliance permits will be issued for the final 5 (five) lots in SUP 2/Phase 2. ***(Condition added 6/12/2023)***

19. These Conditions of Approval shall supersede the terms of the Collins Ridge Master Plan application to the extent these Conditions of Approval are inconsistent with the terms of the Collins Ridge Master Plan Application. The Summary of Conditions of Approval Chart below is a reference and shall not supersede this Conditions of Approval document.

11

Summary of Conditions of Approval Applicable to Specific Parcels Identified on the Collins Ridge Master Plan:

POD #	Anticipated Land Use	Conditions & Other Information
A	Apartments, Single Family Detached, Townhomes and/or other Attached Dwellings ***(Condition amended 6/12/2023)***	• The developer shall be entitled to be built to a maximum density of 24 units per acre. Provided, however, that the maximum number of dwelling units allowed on the entire Collins Ridge Master Plan property shall not exceed 950 units (not including up to 88 Affordable Housing units on Parcel B) • A recreational amenity shall be provided for each apartment complex. See Section 6, sub-bullet entitled "Additional Amenities for Apartment Complexes". • Neighborhood Park required. See Section 6, sub-bullet entitled "Neighborhood Parks." • No building shall exceed four (4) stories above grade.
B	Apartments, Single Family Detached, Townhomes and/or other Attached Dwellings ***(Condition amended 6/12/2023)***	• The developer shall be entitled to build to a maximum density of 30 units per acre. Provided, however, that the maximum number of dwelling units allowed on the entire Collins Ridge Master Plan property shall not exceed 950 units. At least 60, and no more than 88, Affordable Housing units shall be built on Parcel B, and the Affordable Housing units shall be in addition to the 950 dwelling unit maximum otherwise applicable to the Collins Ridge property. • Neighborhood Park required. See Section 6, sub-bullet entitled "Neighborhood Parks." • A recreational amenity shall be provided for each apartment complex. See Section 6, sub-bullet entitled "Additional Amenities for Apartment Complexes". • No building shall exceed four (4) stories above grade.

12

C	Single-family Detached	• The developer shall be entitled to build to a maximum density of 8 units per acre. Provided, however, that the maximum number of dwelling units allowed in the entire Collins Ridge Master Plan property shall not exceed 950 units (not including up to 88 Affordable Housing units on Parcel B). • No lot for a single-family detached dwelling shall exceed 10,000 square feet in size. • Neighborhood Park required. See Section 6, sub-bullet entitled "Neighborhood Parks." • No building shall exceed three (3) stories above grade.
D	Apartments	• The developer shall be entitled to build to a maximum density of 24 units per acre. Provided, however, that the maximum number of dwelling units allowed in the entire Collins Ridge Master Plan property shall not exceed 950 units (not including up to 88 Affordable Housing units on Parcel B). • Neighborhood Park required. See Section 6, sub-bullet entitled "Neighborhood Parks." • A recreational amenity shall be provided for each apartment complex. See Section 6, sub-bullet entitled "Additional Amenities for Apartment Complexes". • No building shall exceed four (4) stories above grade.

13

E	Townhomes and other Attached Dwellings, Single-family homes detached and/or Community Center	• The developer shall be entitled to build to a maximum density of 16 units per acre. Provided, however, that the maximum number of dwelling units allowed in the entire Collins Ridge Master Plan property shall not exceed 950 units (not including up to 88 Affordable Housing units on Parcel B). • Neighborhood Park required. See Section 6, sub-bullet entitled "Neighborhood Parks." • No building shall exceed three (3) stories above grade.
F	Townhomes and other Attached Dwellings, and/or Single-family homes detached	• The developer shall be entitled to build to a maximum density of 16 units per acre. Provided, however, that the maximum number of dwelling units allowed in the entire Collins Ridge Master Plan property shall not exceed 950 units (not including up to 88 Affordable Housing units on Parcel B). • Neighborhood Park required. See Section 6, sub-bullet entitled "Neighborhood Parks." • No building shall exceed three (3) stories above grade.

14

Resolution #20211011-6.B

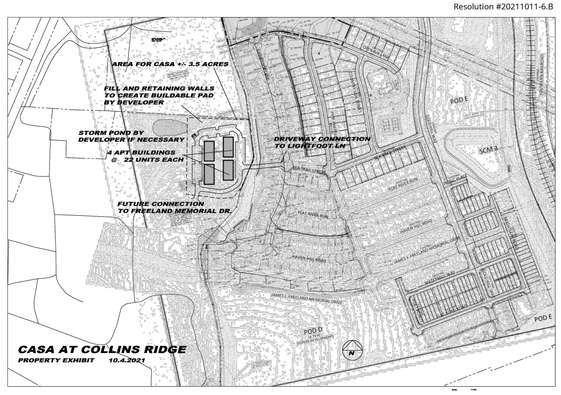

Resolution #20211011-6.B

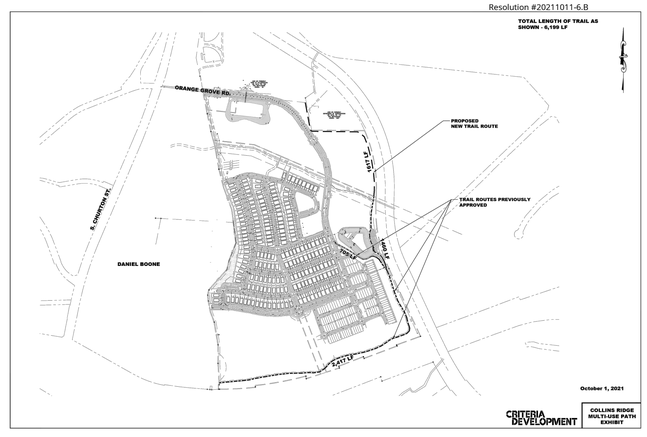

ALL CONSTRUCTION SHALL BE IN ACCORDANCE WITH THE CURRENT TOWN OF HILLSBOROUGH AND NCDOT STANDARDS, SPECIFICATIONS, AND DETAILS.

PRELIMINARY DRAWING - NOT RELEASED FOR CONSTRUCTION

MCADAMS
The John R. McAdams Company, Inc.
2905 Meridian Parkway
Durham, NC 27713

phone 919. 361. 5000
fax 919. 361. 2269
license number: C-0293, C-187

www.mcadamsco.com

CLIENT

DR HORTON
2000 AERIAL DRIVE
MORRISVILLE, NC 27560
Contact
PHONE: 919. 460. 2943

D·R·HORTON America's Builder

COLLINS RIDGE - PHASE 2
SPECIAL USE PERMIT
258 ORANGE GROVE STREET
HILLSBOROUGH, NC

NORTH CAROLINA PROFESSIONAL ENGINEER SEAL 21543 BRADLEY A. RHINEHART
NOT FOR CONSTRUCTION

REVISIONS

NO.	DATE	
1	02. 24. 2023	REVISED PER TOWN COMMENTS
2	06. 02. 2023	REVISED PER TOWN COMMENTS
3	08. 04. 2023	REVISED PER TOWN COMMENTS
4	10. 19. 2023	REVISED PER TOWN COMMENTS
5	11. 03. 2023	REVISED PER TOWN COMMENTS
6	12. 04. 2023	REVISED PER TOWN COMMENTS

PLAN INFORMATION

PROJECT NO.	DRH-21002
FILENAME	DRH21002-N2
CHECKED BY	DLP
DRAWN BY	SJB
SCALE	NTS
DATE	10. 17. 2022

SHEET

CONDITIONS OF APPROVAL

C0.03

M:\Projects\DRH\DRH21002\04-Production\Engineering\Production Drawings\SUP 2\Current Drawings\Special Use Permit Drawings\DRH21002-N2.dwg, 12/1/2023 1:28:25 PM, Dwayne Peterson

LEGEND

- PHASE 1A – PLATTED LOTS
- PHASE 1B (INCLUDES CASA TRACT FOR ROUGH GRADING ONLY) – UNDER CONSTRUCTION DRAWING REVIEW – NO PLAT RECORDED
- ETJ BOUNDARY

GRAPHIC SCALE
0 100 200 400
1 inch = 200 ft.

SEE SHEET C0.01 FOR ALL PROJECT, SITE, GRADING, STORM DRAINAGE AND UTILITY NOTES

ALL CONSTRUCTION SHALL BE IN ACCORDANCE WITH THE CURRENT TOWN OF HILLSBOROUGH AND NCDOT STANDARDS, SPECIFICATIONS, AND DETAILS.

PRELIMINARY DRAWING - NOT RELEASED FOR CONSTRUCTION

MCADAMS
The John R. McAdams Company, Inc.
2905 Meridian Parkway
Durham, NC 27713

phone 919. 361. 5000
fax 919. 361. 2269
license number: C-0293, C-187

www.mcadamsco.com

CLIENT

DR HORTON
2000 AERIAL DRIVE
MORRISVILLE, NC 27560
Contact
PHONE: 919. 460. 2943

D·R·HORTON America's Builder

COLLINS RIDGE - PHASE 2
SPECIAL USE PERMIT
258 ORANGE GROVE STREET
HILLSBOROUGH, NC

NORTH CAROLINA PROFESSIONAL SEAL 21543 ENGINEER BRADLEY A. RHINEHALT
NOT FOR CONSTRUCTION

REVISIONS

NO.	DATE	
1	02. 24. 2023	REVISED PER TOWN COMMENTS
2	06. 02. 2023	REVISED PER TOWN COMMENTS
3	08. 04. 2023	REVISED PER TOWN COMMENTS
4	10. 19. 2023	REVISED PER TOWN COMMENTS
5	11. 03. 2023	REVISED PER TOWN COMMENTS
6	12. 04. 2023	REVISED PER TOWN COMMENTS

PLAN INFORMATION

PROJECT NO.	DRH-21002
FILENAME	DRH21002-XC1
CHECKED BY	DLP
DRAWN BY	SJB
SCALE	1" = 200'
DATE	10. 17. 2022

SHEET

CURRENT CONDITIONS PLAN

C1.00

M:\Projects\DRH\DRH21002\04-Production\Engineering\Production Drawings\SUP 2\Current Drawings\Special Use Permit Drawings\DRH21002-XC1.dwg, 12/7/2023 1:28:54 PM, Dwayne Peterson

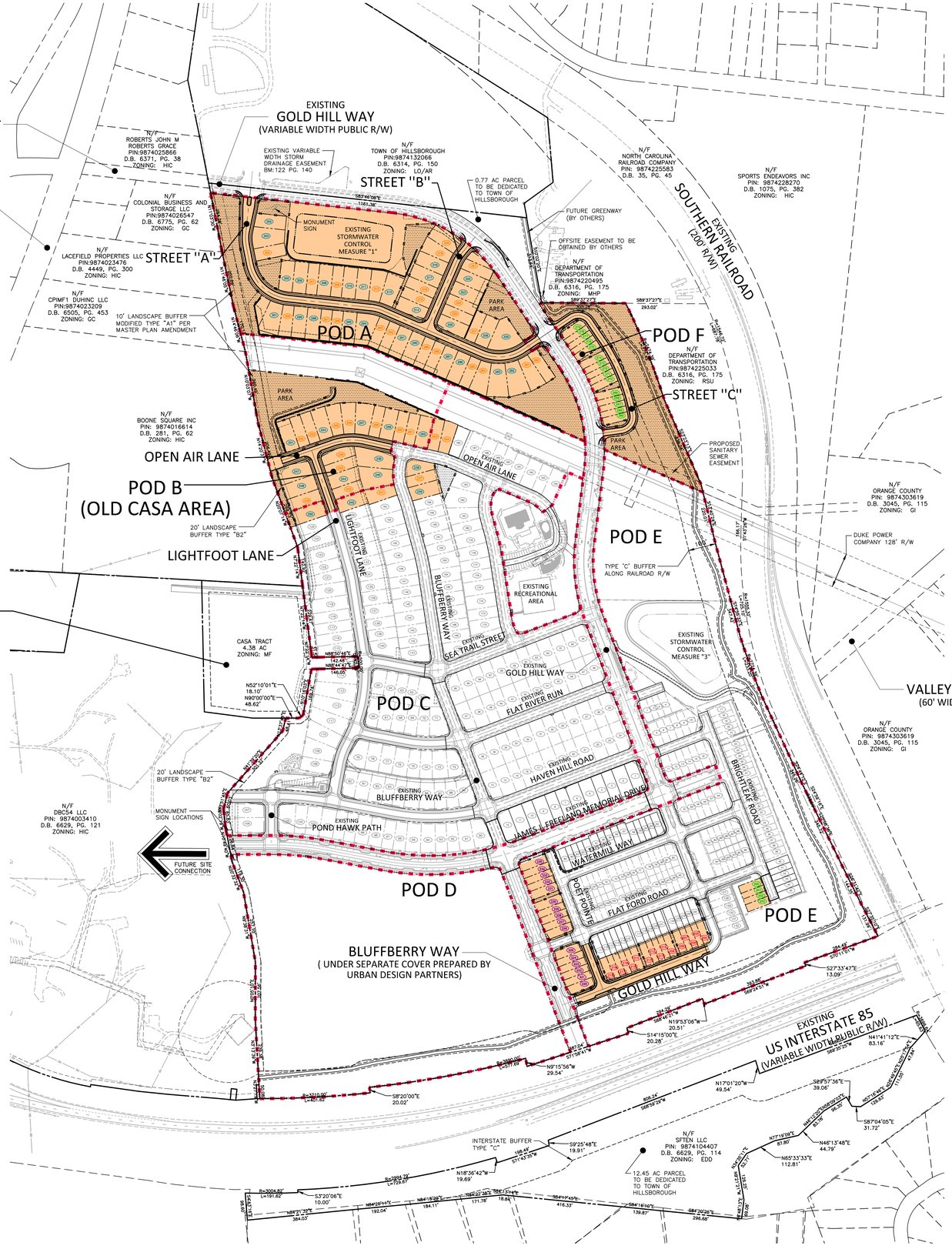

LOT SIZE SUMMARY:

40' SINGLE-FAMILY LOTS	38
50' SINGLE-FAMILY LOTS	41
22'/28' TOWN HOME LOTS (28' FOR END UNITS ONLY)	19
22'/26' TOWNHOME LOTS (26' FOR END UNITS ONLY)	16
26'/32' TOWNHOME LOTS (32' FOR END UNITS ONLY)	16
	130

KEY MAP

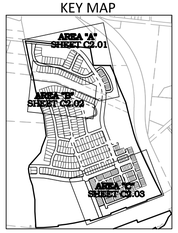

SITE LEGEND

- SIGNAGE
- YARD LIGHTS
- LIGHT POLE
- POWER POLE
- TRAFFIC DIRECTIONAL ARROW
- ACC — ACCESSIBLE PARKING STALL
- VAN — VAN ACCESSIBLE PARKING STALL
- POD BOUNDARY
- PROPERTY LINE
- RIGHT-OF-WAY LINE
- LOT LINE
- EASEMENT LINE
- CENTERLINE
- PROPOSED RETAINING WALL
- OPEN SPACE
- SUP 2 AREAS

GRAPHIC SCALE
0 100 200 400
1 inch = 200 ft.

SEE SHEET C0.01 FOR ALL PROJECT, SITE, GRADING, STORM DRAINAGE AND UTILITY NOTES

ALL CONSTRUCTION SHALL BE IN ACCORDANCE WITH THE CURRENT TOWN OF HILLSBOROUGH AND NCDOT STANDARDS, SPECIFICATIONS, AND DETAILS.

PRELIMINARY DRAWING - NOT RELEASED FOR CONSTRUCTION

MCADAMS
The John R. McAdams Company, Inc.
2905 Meridian Parkway
Durham, NC 27713

phone 919. 361. 5000
fax 919. 361. 2269
license number: C-0293, C-187

www.mcadamsco.com

CLIENT

DR HORTON
2000 AERIAL DRIVE
MORRISVILLE, NC 27560
Contact
PHONE: 919. 460. 2943

D·R·HORTON
America's Builder

COLLINS RIDGE - PHASE 2
SPECIAL USE PERMIT
258 ORANGE GROVE STREET
HILLSBOROUGH, NC

NORTH CAROLINA PROFESSIONAL SEAL 21543 ENGINEER BRADLEY A. RHINEHART
NOT FOR CONSTRUCTION

REVISIONS

NO.	DATE	
1	02. 24. 2023	REVISED PER TOWN COMMENTS
2	06. 02. 2023	REVISED PER TOWN COMMENTS
3	08. 04. 2023	REVISED PER TOWN COMMENTS
4	10. 19. 2023	REVISED PER TOWN COMMENTS
5	11. 03. 2023	REVISED PER TOWN COMMENTS
6	12. 04. 2023	REVISED PER TOWN COMMENTS

PLAN INFORMATION

PROJECT NO.	DRH-21002
FILENAME	DRH21002-OAS1
CHECKED BY	DLP
DRAWN BY	SJB
SCALE	1" = 200'
DATE	10. 17. 2022

SHEET

MASTER SITE PLAN

C2.00

M:\Projects\DRH\DRH21002\04-Production\Engineering\Production Drawings\SUP 2\Current Drawings\Special Use Permit Drawing\DRH21002-OAS1.dwg, 12/1/2023 1:29:20 PM, Dwayne Peterson

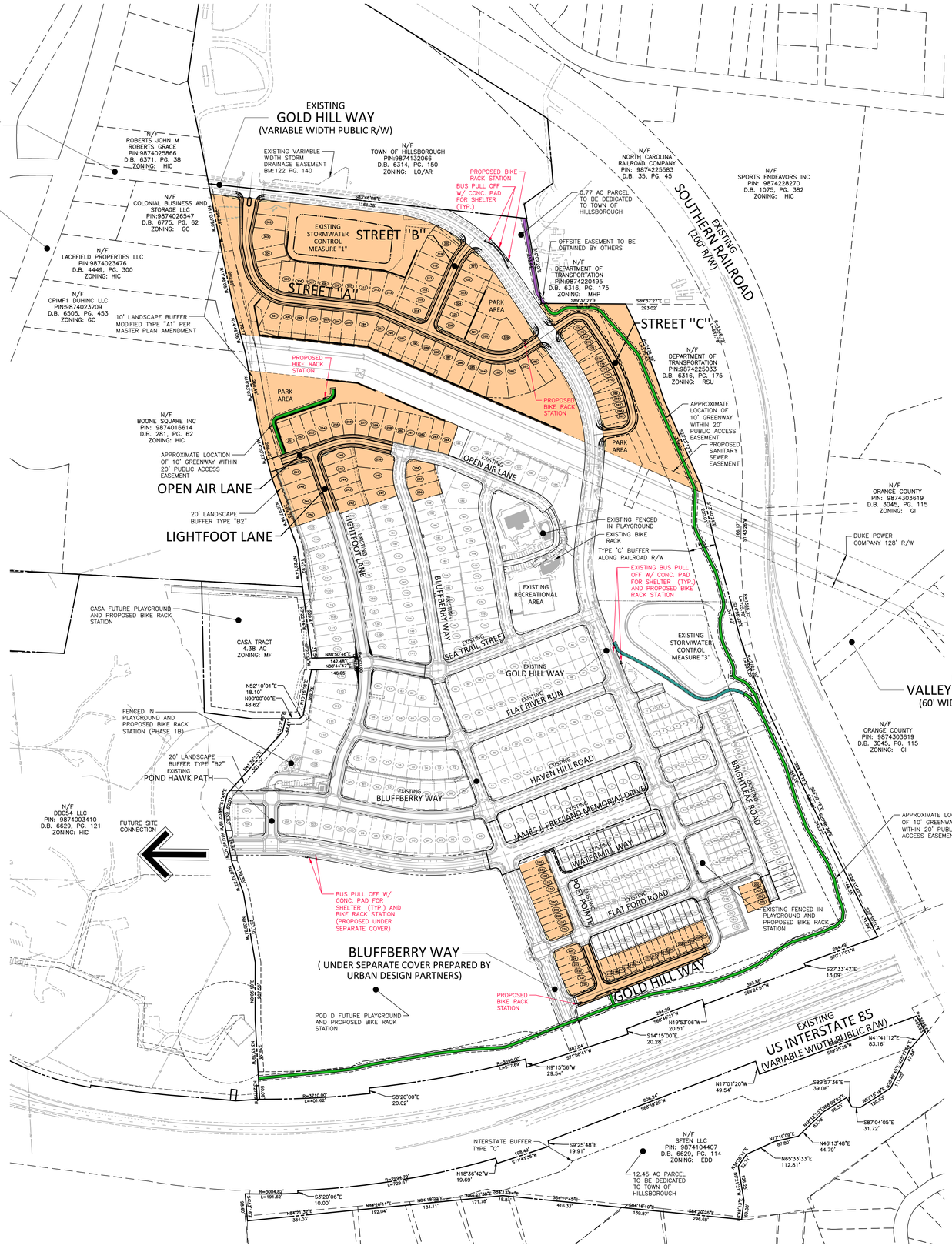

KEY MAP

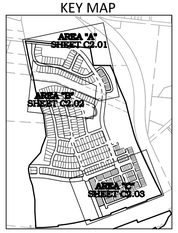

LEGEND

- SUP 2 AREAS
- PROPOSED GREENWAY LOCATION (PHASE 2)
- PHASE 1A GREENWAY LOCATION
- FUTURE GREENWAY LOCATION

NOTE:

1. THE GREENWAY TRAIL WILL BE FIELD WALKED WITH THE PUBLIC SPACE AND SUSTAINABILITY MANAGER TO DETERMINE THE PREFERRED ROUTE TO MINIMIZE IMPACT AND ALLOW TRAIL TO MEET THE ACCESS BOARD STANDARDS.
2. IF TOWN ACCEPTS 0.77 ACRE PARCEL DONATION, GREENWAY TRAIL WILL TERMINATE AT THE SOUTHERN PROPERTY LINE OF THE 0.77 ACRE PARCEL.

GRAPHIC SCALE
0 100 200 400
1 inch = 200 ft.

SEE SHEET C0.01 FOR ALL PROJECT, SITE, GRADING, STORM DRAINAGE AND UTILITY NOTES

ALL CONSTRUCTION SHALL BE IN ACCORDANCE WITH THE CURRENT TOWN OF HILLSBOROUGH AND NCDOT STANDARDS, SPECIFICATIONS, AND DETAILS.

PRELIMINARY DRAWING - NOT RELEASED FOR CONSTRUCTION

MCADAMS
The John R. McAdams Company, Inc.
2905 Meridian Parkway
Durham, NC 27713

phone 919. 361. 5000
fax 919. 361. 2269
license number: C-0293, C-187

www.mcadamsco.com

CLIENT

DR HORTON
2000 AERIAL DRIVE
MORRISVILLE, NC 27560
Contact
PHONE: 919. 460. 2943

D·R·HORTON America's Builder

COLLINS RIDGE - PHASE 2
SPECIAL USE PERMIT
258 ORANGE GROVE STREET
HILLSBOROUGH, NC

NORTH CAROLINA PROFESSIONAL SEAL 21543 ENGINEER BRADLEY A. RHINEHART
NOT FOR CONSTRUCTION

REVISIONS

NO.	DATE	
1	02. 24. 2023	REVISED PER TOWN COMMENTS
2	06. 02. 2023	REVISED PER TOWN COMMENTS
3	08. 04. 2023	REVISED PER TOWN COMMENTS
4	10. 19. 2023	REVISED PER TOWN COMMENTS
5	11. 03. 2023	REVISED PER TOWN COMMENTS
6	12. 04. 2023	REVISED PER TOWN COMMENTS

PLAN INFORMATION

PROJECT NO.	DRH-21002
FILENAME	DRH21002-OAS2
CHECKED BY	DLP
DRAWN BY	SJB
SCALE	1" = 200'
DATE	10. 17. 2022

SHEET

OVERALL TRANSPORTATION PLAN

C2.00A

M:\Projects\DRH\DRH21002\04-Production\Engineering\Production Drawings\SUP 2\Current Drawings\Special Use Permit Drawings\DRH21002-OAS2.dwg, 12/1/2023 1:29:43 PM, Dwayne Peterson

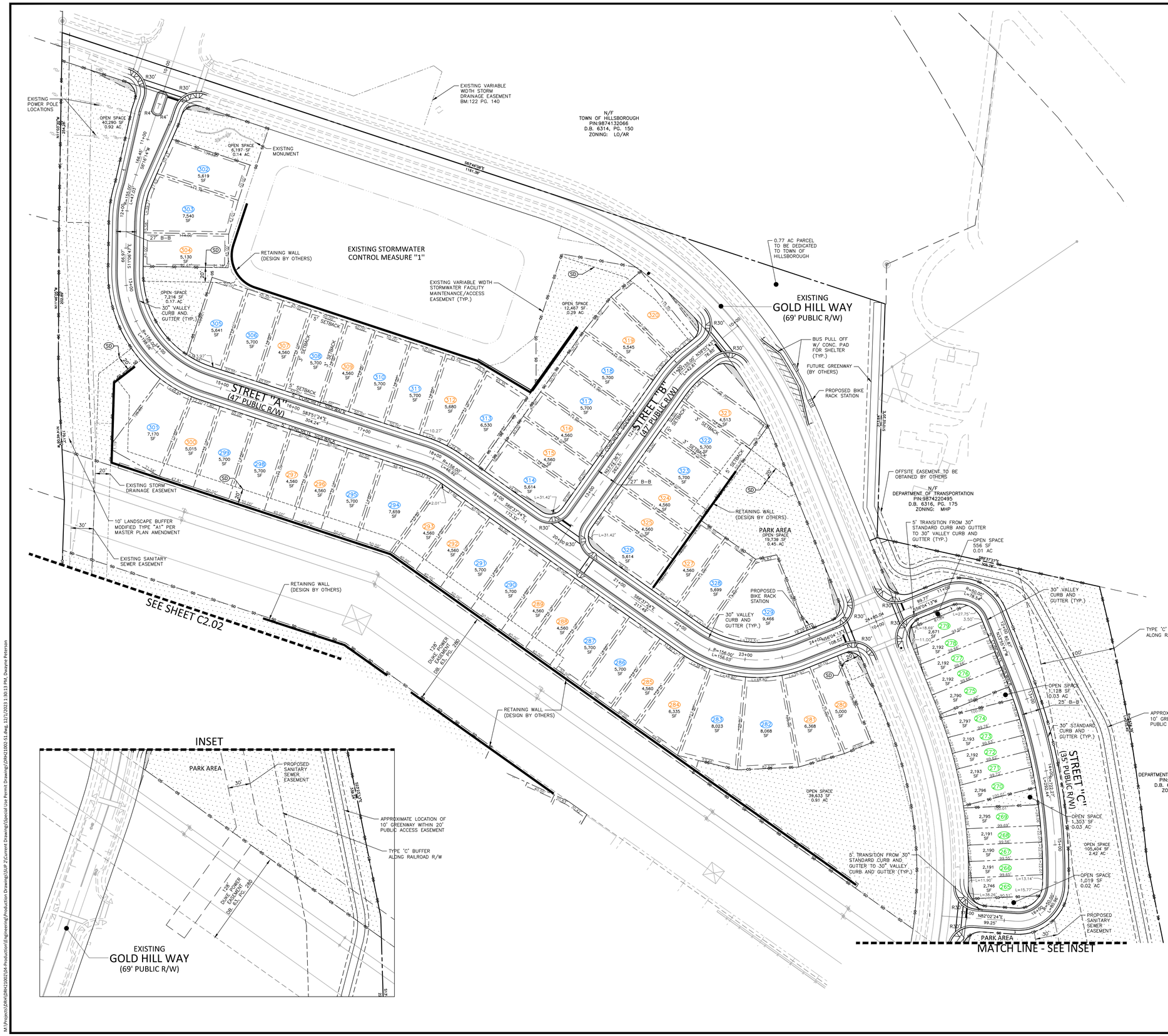

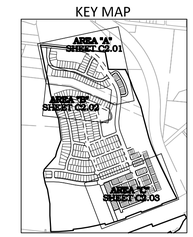

SITE LEGEND

- SIGNAGE
- YARD LIGHTS
- LIGHT POLE
- POWER POLE
- TRAFFIC DIRECTIONAL ARROW
- ACC — ACCESSIBLE PARKING STALL
- VAN — VAN ACCESSIBLE PARKING STALL
- POD BOUNDARY
- PROPERTY LINE
- RIGHT-OF-WAY LINE
- LOT LINE
- EASEMENT LINE
- CENTERLINE
- PROPOSED RETAINING WALL
- OS — OPEN SPACE

EASEMENT LEGEND

- SD — PROPOSED STORM DRAINAGE EASEMENT

LOT SIZE SUMMARY:

(000)	40' SINGLE-FAMILY LOTS	38
(000)	50' SINGLE-FAMILY LOTS	41
(000)	22'/28' TOWN HOME LOTS (28' FOR END UNITS ONLY)	19
(000)	22'/26' TOWNHOME LOTS (26' FOR END UNITS ONLY)	16
(000)	26'/32' TOWNHOME LOTS (32' FOR END UNITS ONLY)	16
		130

GRAPHIC SCALE
0 30 60 120
1 inch = 60 ft.

SEE SHEET C0.01 FOR ALL PROJECT, SITE, GRADING, STORM DRAINAGE AND UTILITY NOTES

ALL CONSTRUCTION SHALL BE IN ACCORDANCE WITH THE CURRENT TOWN OF HILLSBOROUGH AND NCDOT STANDARDS, SPECIFICATIONS, AND DETAILS.

PRELIMINARY DRAWING - NOT RELEASED FOR CONSTRUCTION

McADAMS
The John R. McAdams Company, Inc.
2905 Meridian Parkway
Durham, NC 27713

phone 919. 361. 5000
fax 919. 361. 2269
license number: C-0293, C-187

www.mcadamsco.com

CLIENT

DR HORTON
2000 AERIAL DRIVE
MORRISVILLE, NC 27560
Contact
PHONE: 919. 460. 2943

D·R·HORTON America's Builder

COLLINS RIDGE - PHASE 2
SPECIAL USE PERMIT
258 ORANGE GROVE STREET
HILLSBOROUGH, NC

NORTH CAROLINA PROFESSIONAL SEAL 21543 ENGINEER BRADLEY A. RHINEHART
NOT FOR CONSTRUCTION

REVISIONS

NO.	DATE	
1	02. 24. 2023	REVISED PER TOWN COMMENTS
2	06. 02. 2023	REVISED PER TOWN COMMENTS
3	08. 04. 2023	REVISED PER TOWN COMMENTS
4	10. 19. 2023	REVISED PER TOWN COMMENTS
5	11. 03. 2023	REVISED PER TOWN COMMENTS
6	12. 04. 2023	REVISED PER TOWN COMMENTS

PLAN INFORMATION

PROJECT NO.	DRH-21002
FILENAME	DRH21002-S1
CHECKED BY	DLP
DRAWN BY	SJB
SCALE	1" = 60'
DATE	10. 17. 2022

SHEET

SITE PLAN AREA "A"

C2.01

M:\Projects\DRH\DRH21002\04-Production\Engineering\Production Drawings\SUP 2\Current Drawings\Special Use Permit Drawing\DRH21002-S1.dwg, 12/1/2023 1:30:13 PM, Dwayne Peterson

SITE LEGEND

- SIGNAGE
- YARD LIGHTS
- LIGHT POLE
- POWER POLE
- TRAFFIC DIRECTIONAL ARROW
- ACC — ACCESSIBLE PARKING STALL
- VAN — VAN ACCESSIBLE PARKING STALL
- POD BOUNDARY
- PROPERTY LINE
- RIGHT-OF-WAY LINE
- LOT LINE
- EASEMENT LINE
- CENTERLINE
- PROPOSED RETAINING WALL
- OPEN SPACE

EASEMENT LEGEND

(SD) PROPOSED STORM DRAINAGE EASEMENT

LOT SIZE SUMMARY:

(000)	40' SINGLE-FAMILY LOTS	38
(000)	50' SINGLE-FAMILY LOTS	41
(000)	22'/28' TOWN HOME LOTS (28' FOR END UNITS ONLY)	19
(000)	22'/26' TOWNHOME LOTS (26' FOR END UNITS ONLY)	16
(000)	26'/32' TOWNHOME LOTS (32' FOR END UNITS ONLY)	16
		130

GRAPHIC SCALE
0 30 60 120
1 inch = 60 ft.

SEE SHEET C0.01 FOR ALL PROJECT, SITE, GRADING, STORM DRAINAGE AND UTILITY NOTES

ALL CONSTRUCTION SHALL BE IN ACCORDANCE WITH THE CURRENT TOWN OF HILLSBOROUGH AND NCDOT STANDARDS, SPECIFICATIONS, AND DETAILS.

PRELIMINARY DRAWING - NOT RELEASED FOR CONSTRUCTION

McADAMS
The John R. McAdams Company, Inc.
2905 Meridian Parkway
Durham, NC 27713

phone 919. 361. 5000
fax 919. 361. 2269
license number: C-0293, C-187

www.mcadamsco.com

CLIENT

DR HORTON
2000 AERIAL DRIVE
MORRISVILLE, NC 27560
Contact
PHONE: 919. 460. 2943

D·R·HORTON America's Builder

COLLINS RIDGE - PHASE 2
SPECIAL USE PERMIT
258 ORANGE GROVE STREET
HILLSBOROUGH, NC

NORTH CAROLINA PROFESSIONAL SEAL 21543 ENGINEER BRADLEY A. RHINEHART
NOT FOR CONSTRUCTION

REVISIONS

NO.	DATE	
1	02. 24. 2023	REVISED PER TOWN COMMENTS
2	06. 02. 2023	REVISED PER TOWN COMMENTS
3	08. 04. 2023	REVISED PER TOWN COMMENTS
4	10. 19. 2023	REVISED PER TOWN COMMENTS
5	11. 03. 2023	REVISED PER TOWN COMMENTS
6	12. 04. 2023	REVISED PER TOWN COMMENTS

PLAN INFORMATION

PROJECT NO.	DRH-21002
FILENAME	DRH21002-S1
CHECKED BY	DLP
DRAWN BY	SJB
SCALE	1" = 60'
DATE	10. 17. 2022

SHEET

SITE PLAN AREA "B"

C2.02

M:\Projects\DRH\DRH21002\04-Production\Engineering\Production Drawings\SUP 2\Current Drawings\Special Use Permit Drawings\DRH21002-S1.dwg, 12/1/2023 1:30:22 PM, Dwayne Peterson

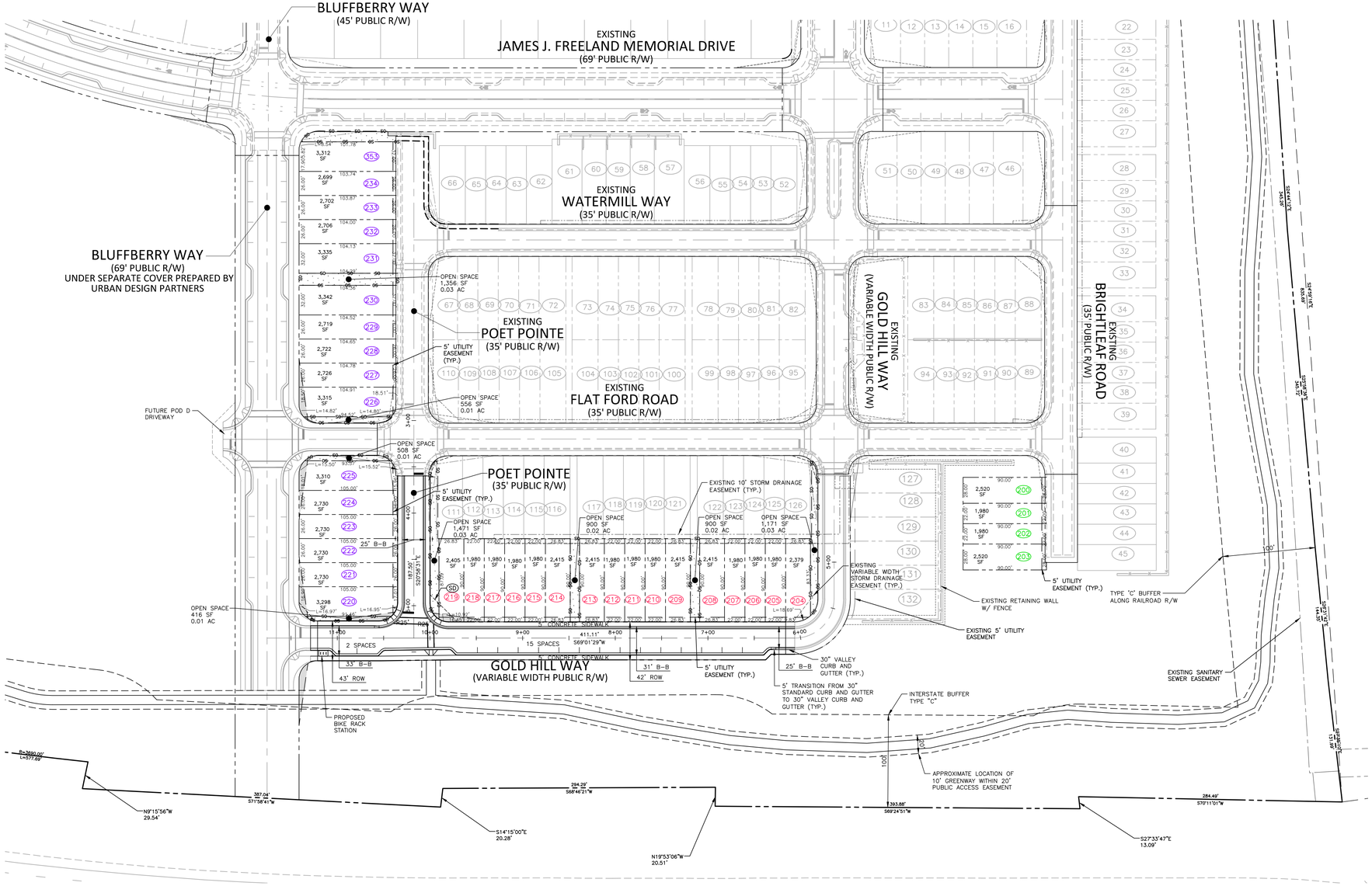

KEY MAP

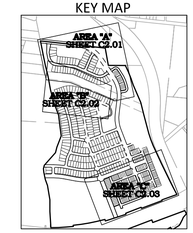

SITE LEGEND

	SIGNAGE
	YARD LIGHTS
	LIGHT POLE
	POWER POLE
	TRAFFIC DIRECTIONAL ARROW
ACC	ACCESSIBLE PARKING STALL
VAN	VAN ACCESSIBLE PARKING STALL
	POD BOUNDARY
	PROPERTY LINE
	RIGHT-OF-WAY LINE
	LOT LINE
	EASEMENT LINE
	CENTERLINE
	PROPOSED RETAINING WALL
	OPEN SPACE

EASEMENT LEGEND

SD PROPOSED STORM DRAINAGE EASEMENT

LOT SIZE SUMMARY:

000	40' SINGLE-FAMILY LOTS	38
000	50' SINGLE-FAMILY LOTS	41
000	22'/28' TOWN HOME LOTS (28' FOR END UNITS ONLY)	19
000	22'/26' TOWNHOME LOTS (26' FOR END UNITS ONLY)	16
000	26'/32' TOWNHOME LOTS (32' FOR END UNITS ONLY)	16
		130

GRAPHIC SCALE

0 30 60 120

1 inch = 60 ft.

SEE SHEET C0.01 FOR ALL PROJECT, SITE, GRADING, STORM DRAINAGE AND UTILITY NOTES

ALL CONSTRUCTION SHALL BE IN ACCORDANCE WITH THE CURRENT TOWN OF HILLSBOROUGH AND NCDOT STANDARDS, SPECIFICATIONS, AND DETAILS.

PRELIMINARY DRAWING - NOT RELEASED FOR CONSTRUCTION

McADAMS

The John R. McAdams Company, Inc.
2905 Meridian Parkway
Durham, NC 27713

phone 919. 361. 5000
fax 919. 361. 2269
license number: C-0293, C-187

www.mcadamsco.com

CLIENT

DR HORTON
2000 AERIAL DRIVE
MORRISVILLE, NC 27560
Contact
PHONE: 919. 460. 2943

D·R·HORTON
America's Builder

COLLINS RIDGE - PHASE 2
SPECIAL USE PERMIT
258 ORANGE GROVE STREET
HILLSBOROUGH, NC

NORTH CAROLINA PROFESSIONAL SEAL 21543 ENGINEER BRADLEY A. RHINEHALT
NOT FOR CONSTRUCTION

REVISIONS

NO.	DATE	
1	02. 24. 2023	REVISED PER TOWN COMMENTS
2	06. 02. 2023	REVISED PER TOWN COMMENTS
3	08. 04. 2023	REVISED PER TOWN COMMENTS
4	10. 19. 2023	REVISED PER TOWN COMMENTS
5	11. 03. 2023	REVISED PER TOWN COMMENTS
6	12. 04. 2023	REVISED PER TOWN COMMENTS

PLAN INFORMATION

PROJECT NO.	DRH-21002
FILENAME	DRH21002-S1
CHECKED BY	DLP
DRAWN BY	SJB
SCALE	1" = 60'
DATE	10. 17. 2022

SHEET

SITE PLAN AREA "C"

C2.03

M:\Projects\DRH\DRH21002\04-Production\Engineering\Production Drawings\SUP 2\Current Drawings\Special Use Permit Drawing\DRH21002-S1.dwg, 12/1/2023 1:30:31 PM, Dwayne Peterson

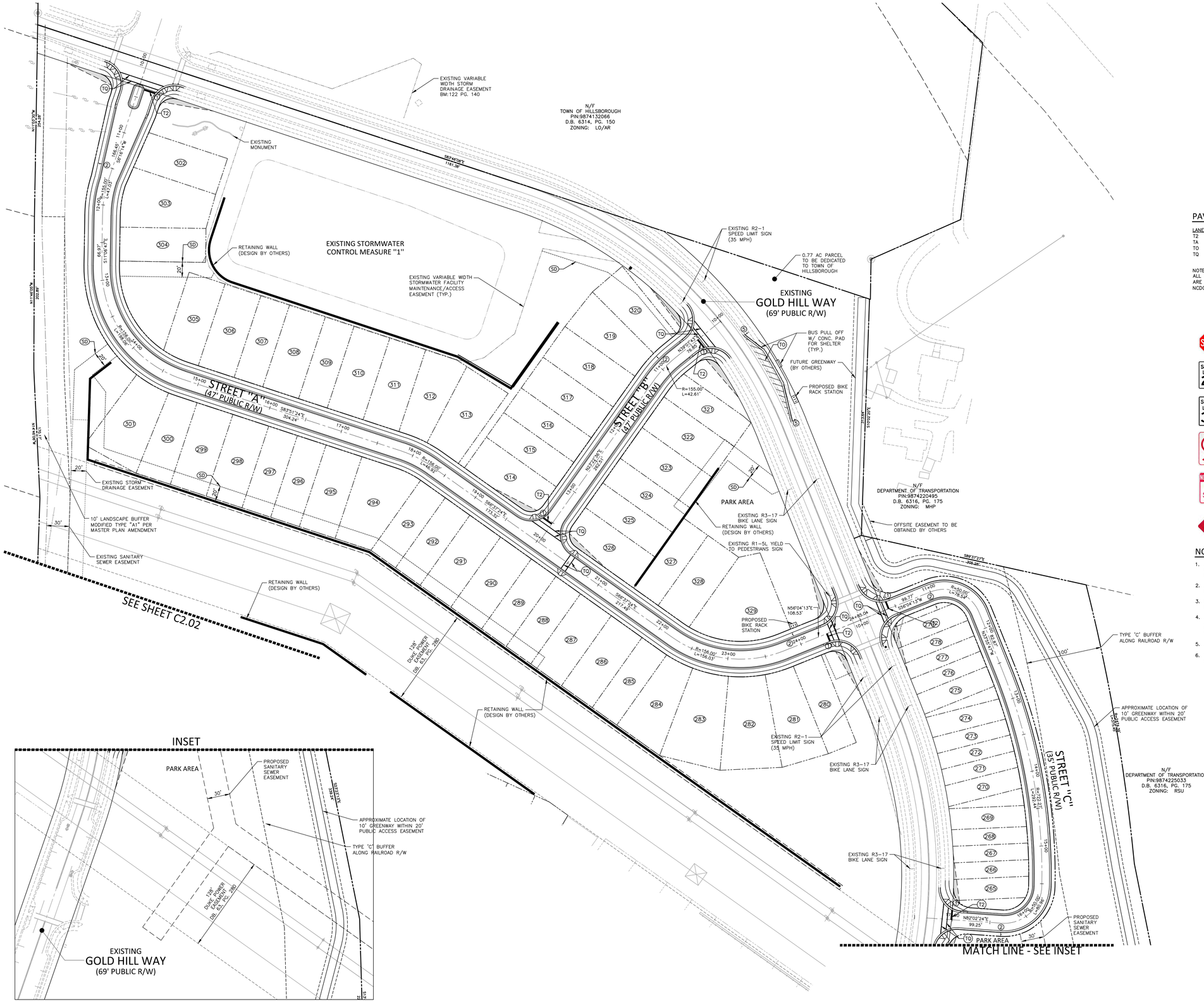

INSET

KEY MAP

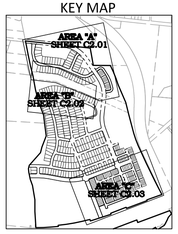

PAVEMENT MARKING LEGEND

LANE LINES/MARKINGS

T2 24" WHITE STOPBAR
TA 4" WHITE EDGELINE
TO 8" WHITE DIAGONAL
TQ 8" WHITE CROSSWALK LINE

NOTE:
ALL PAVEMENT MARKINGS SHALL BE THERMOPLASTIC AND ARE TO BE PLACED PER NCDOT STANDARDS (REFERENCE NCDOT DETAILS (1205.01–1205.12))

SIGNAGE LEGEND

STOP	①	STOP (R1–1) 30"x30"
SPEED LIMIT 25	②	SPEED LIMIT (R2–1)
SPEED LIMIT 35	③	SPEED LIMIT (R2–1)
	④	NO PARKING (R7–1) 12"x18"
NO PARKING BUS STOP	⑤	NO PARKING – BUS STOP (R7–107) 12"x18"
	⑥	END ROAD – RED BLANKS (OM4–3) 18"x18"

NOTE

1. ALL NEW SIGNS WILL INCLUDE PRISMATIC SHEETING AND WILL CONFORM TO THE LATEST RETROREFLECTIVITY STANDARDS FOUND IN THE LATEST EDITION OF THE MUTCD.
2. ALL SIGNS MUST MEET MUTCD GUIDELINES FOR LETTER HEIGHT, LETTER CASE AND SIGN COLOR.
3. EXISTING SIGNS SHALL BE RELOCATED TO THE APPROPRIATE LOCATION IN THE FIELD.
4. ALL SIGNS MUST MEET TOWN OF HILLSBOROUGH STANDARDS AND SPECIFICATIONS. IF DEVELOPER INSTALLS SPECIAL SIGNAGE, A MAINTENANCE AGREEMENT WILL BE REQUIRED FOR THE DEVELOPER/HOA TO MAINTAIN SIGNAGE.
5. ALL EXISTING SIGN LOCATIONS ARE APPROXIMATE.
6. "NO PARKING" SIGNS WILL BE REQUIRED ON ONE SIDE OF STREETS TO MAINTAIN FIRE/EMERGENCY ACCESS.

GRAPHIC SCALE
0 30 60 120
1 inch = 60 ft.

SEE SHEET C0.01 FOR ALL PROJECT, SITE, GRADING, STORM DRAINAGE AND UTILITY NOTES

ALL CONSTRUCTION SHALL BE IN ACCORDANCE WITH THE CURRENT TOWN OF HILLSBOROUGH AND NCDOT STANDARDS, SPECIFICATIONS, AND DETAILS.

PRELIMINARY DRAWING - NOT RELEASED FOR CONSTRUCTION

McADAMS
The John R. McAdams Company, Inc.
2905 Meridian Parkway
Durham, NC 27713

phone 919. 361. 5000
fax 919. 361. 2269
license number: C-0293, C-187

www.mcadamsco.com

CLIENT

DR HORTON
2000 AERIAL DRIVE
MORRISVILLE, NC 27560
Contact
PHONE: 919. 460. 2943

D·R·HORTON
America's Builder

COLLINS RIDGE - PHASE 2
SPECIAL USE PERMIT
258 ORANGE GROVE STREET
HILLSBOROUGH, NC

NORTH CAROLINA PROFESSIONAL SEAL 21543 ENGINEER BRADLEY A. RHINEHART
NOT FOR CONSTRUCTION

REVISIONS

NO.	DATE	
1	02. 24. 2023	REVISED PER TOWN COMMENTS
2	06. 02. 2023	REVISED PER TOWN COMMENTS
3	08. 04. 2023	REVISED PER TOWN COMMENTS
4	10. 19. 2023	REVISED PER TOWN COMMENTS
5	11. 03. 2023	REVISED PER TOWN COMMENTS
6	12. 04. 2023	REVISED PER TOWN COMMENTS

PLAN INFORMATION

PROJECT NO.	DRH-21002
FILENAME	DRH21002-S2
CHECKED BY	DLP
DRAWN BY	SJB
SCALE	1" = 60'
DATE	10. 17. 2022

SHEET

SIGNAGE AND PAVEMENT MARKING PLAN AREA "A"

C2.04

M:\Projects\DRH\DRH21002\04-Production\Engineering\Production Drawings\SUP 2\Current Drawings\Special Use Permit Drawing\DRH21002-S2.dwg, 12/7/2023 1:31:02 PM, Dwayne Peterson

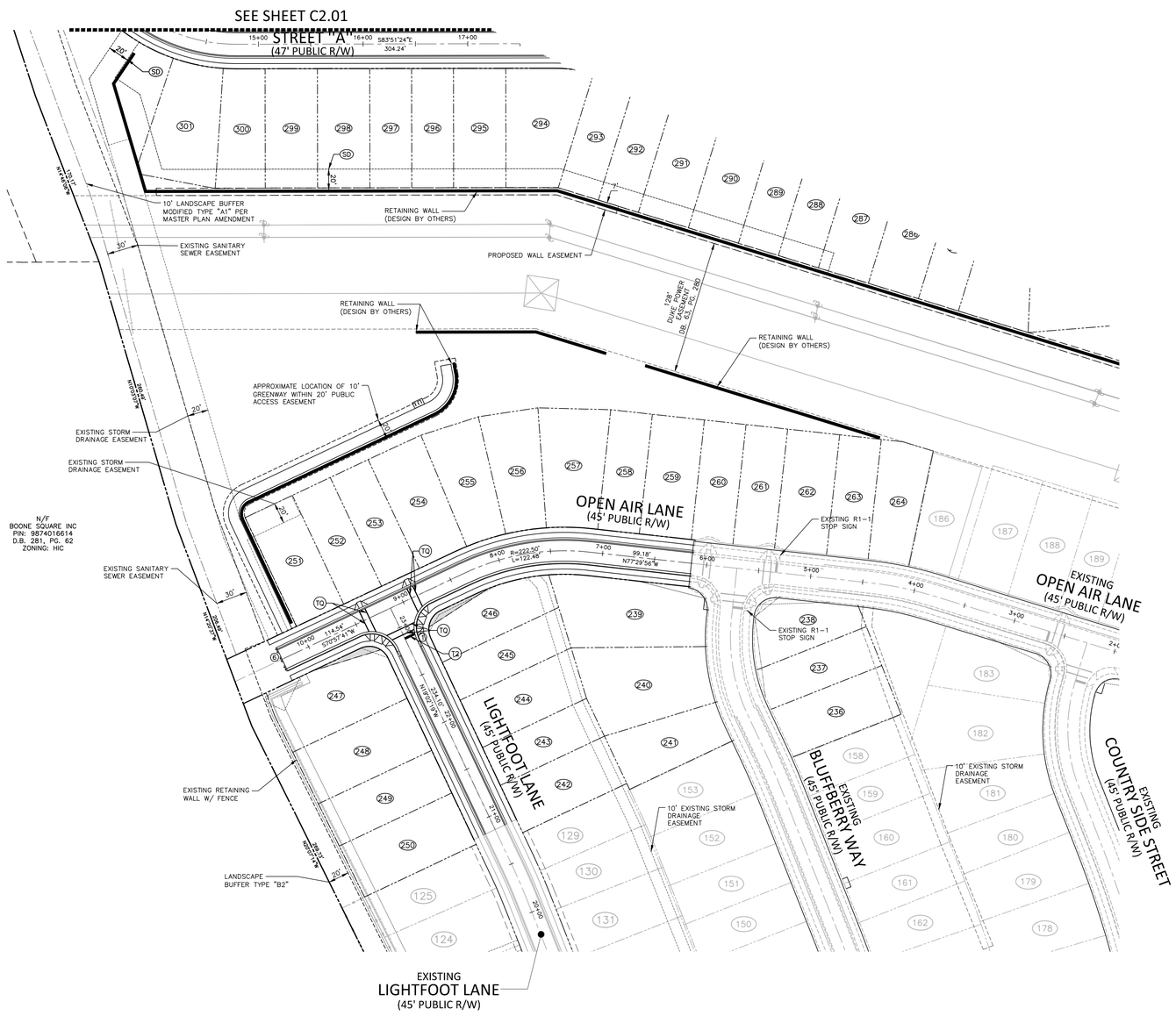

KEY MAP

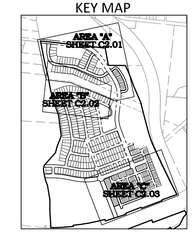

PAVEMENT MARKING LEGEND

LANE LINES/MARKINGS

T2	24" WHITE STOPBAR
TA	4" WHITE EDGELINE
TO	8" WHITE DIAGONAL
TQ	8" WHITE CROSSWALK LINE

NOTE:
ALL PAVEMENT MARKINGS SHALL BE THERMOPLASTIC AND ARE TO BE PLACED PER NCDOT STANDARDS (REFERENCE NCDOT DETAILS (1205.01–1205.12))

SIGNAGE LEGEND

①	STOP (R1–1) 30"x30"
②	SPEED LIMIT (R2–1)
③	SPEED LIMIT (R2–1)
④	NO PARKING (R7–1) 12"x18"
⑤	NO PARKING – BUS STOP (R7–107) 12"x18"
⑥	END ROAD – RED BLANKS (OM4–3) 18"x18"

NOTE

1. ALL NEW SIGNS WILL INCLUDE PRISMATIC SHEETING AND WILL CONFORM TO THE LATEST RETROREFLECTIVITY STANDARDS FOUND IN THE LATEST EDITION OF THE MUTCD.
2. ALL SIGNS MUST MEET MUTCD GUIDELINES FOR LETTER HEIGHT, LETTER CASE AND SIGN COLOR.
3. EXISTING SIGNS SHALL BE RELOCATED TO THE APPROPRIATE LOCATION IN THE FIELD.
4. ALL SIGNS MUST MEET TOWN OF HILLSBOROUGH STANDARDS AND SPECIFICATIONS. IF DEVELOPER INSTALLS SPECIAL SIGNAGE, A MAINTENANCE AGREEMENT WILL BE REQUIRED FOR THE DEVELOPER/HOA TO MAINTAIN SIGNAGE.
5. ALL EXISTING SIGN LOCATIONS ARE APPROXIMATE.
6. "NO PARKING" SIGNS WILL BE REQUIRED ON ONE SIDE OF STREETS TO MAINTAIN FIRE/EMERGENCY ACCESS.

GRAPHIC SCALE
0 30 60 120
1 inch = 60 ft.

SEE SHEET C0.01 FOR ALL PROJECT, SITE, GRADING, STORM DRAINAGE AND UTILITY NOTES

ALL CONSTRUCTION SHALL BE IN ACCORDANCE WITH THE CURRENT TOWN OF HILLSBOROUGH AND NCDOT STANDARDS, SPECIFICATIONS, AND DETAILS.

PRELIMINARY DRAWING - NOT RELEASED FOR CONSTRUCTION

McADAMS
The John R. McAdams Company, Inc.
2905 Meridian Parkway
Durham, NC 27713

phone 919. 361. 5000
fax 919. 361. 2269
license number: C-0293, C-187

www.mcadamsco.com

CLIENT

DR HORTON
2000 AERIAL DRIVE
MORRISVILLE, NC 27560
Contact
PHONE: 919. 460. 2943

D·R·HORTON America's Builder

COLLINS RIDGE - PHASE 2
SPECIAL USE PERMIT
258 ORANGE GROVE STREET
HILLSBOROUGH, NC

NORTH CAROLINA PROFESSIONAL SEAL 21543 ENGINEER BRADLEY A. RHINEHART
NOT FOR CONSTRUCTION

REVISIONS

NO.	DATE	
1	02. 24. 2023	REVISED PER TOWN COMMENTS
2	06. 02. 2023	REVISED PER TOWN COMMENTS
3	08. 04. 2023	REVISED PER TOWN COMMENTS
4	10. 19. 2023	REVISED PER TOWN COMMENTS
5	11. 03. 2023	REVISED PER TOWN COMMENTS
6	12. 04. 2023	REVISED PER TOWN COMMENTS

PLAN INFORMATION

PROJECT NO.	DRH-21002
FILENAME	DRH21002-S2
CHECKED BY	DLP
DRAWN BY	SJB
SCALE	1" = 60'
DATE	10. 17. 2022

SHEET

SIGNAGE AND PAVEMENT MARKING PLAN AREA "B"

C2.05

M:\Projects\DRH\DRH21002\04-Production\Engineering\Production Drawings\SUP 2\Current Drawings\Special Use Permit Drawings\DRH21002-S2.dwg, 12/7/2023 1:31:08 PM, Dwayne Peterson

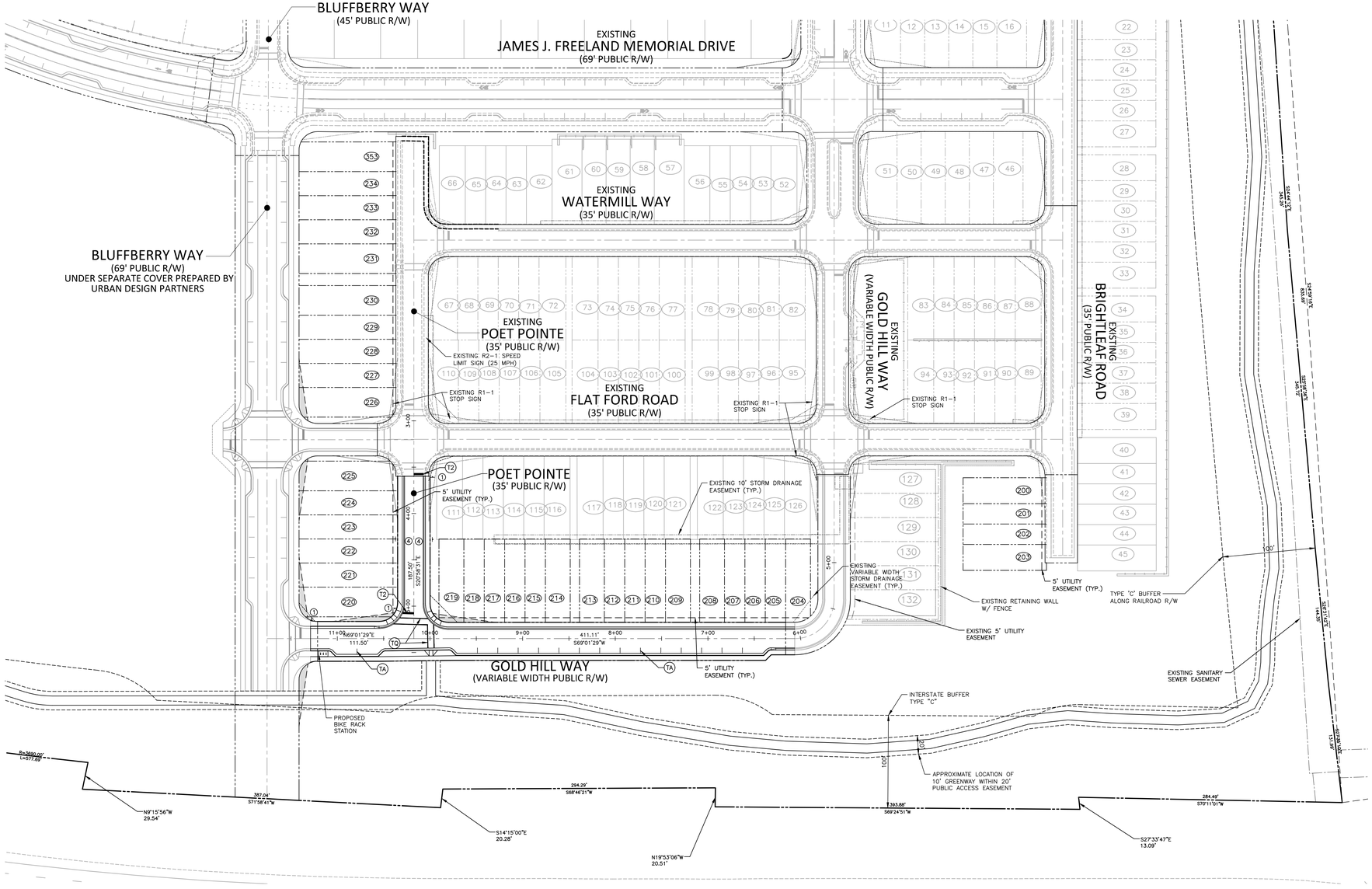

KEY MAP

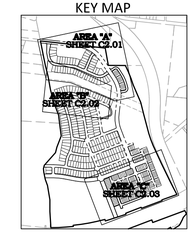

PAVEMENT MARKING LEGEND

LANE LINES/MARKINGS

T2	24"	WHITE STOPBAR
TA	4"	WHITE EDGELINE
TO	8"	WHITE DIAGONAL
TQ	8"	WHITE CROSSWALK LINE

NOTE:
ALL PAVEMENT MARKINGS SHALL BE THERMOPLASTIC AND ARE TO BE PLACED PER NCDOT STANDARDS (REFERENCE NCDOT DETAILS (1205.01–1205.12))

SIGNAGE LEGEND

STOP	①	STOP (R1–1) 30"x30"
SPEED LIMIT 25	②	SPEED LIMIT (R2–1)
SPEED LIMIT 35	③	SPEED LIMIT (R2–1)
	④	NO PARKING (R7–1) 12"x18"
NO PARKING BUS STOP	⑤	NO PARKING – BUS STOP (R7–107) 12"x18"
	⑥	END ROAD – RED BLANKS (OM4–3) 18"x18"

NOTE

1. ALL NEW SIGNS WILL INCLUDE PRISMATIC SHEETING AND WILL CONFORM TO THE LATEST RETROREFLECTIVITY STANDARDS FOUND IN THE LATEST EDITION OF THE MUTCD.
2. ALL SIGNS MUST MEET MUTCD GUIDELINES FOR LETTER HEIGHT, LETTER CASE AND SIGN COLOR.
3. EXISTING SIGNS SHALL BE RELOCATED TO THE APPROPRIATE LOCATION IN THE FIELD.
4. ALL SIGNS MUST MEET TOWN OF HILLSBOROUGH STANDARDS AND SPECIFICATIONS. IF DEVELOPER INSTALLS SPECIAL SIGNAGE, A MAINTENANCE AGREEMENT WILL BE REQUIRED FOR THE DEVELOPER/HOA TO MAINTAIN SIGNAGE.
5. ALL EXISTING SIGN LOCATIONS ARE APPROXIMATE.
6. "NO PARKING" SIGNS WILL BE REQUIRED ON ONE SIDE OF STREETS TO MAINTAIN FIRE/EMERGENCY ACCESS.

GRAPHIC SCALE
0 30 60 120
1 inch = 60 ft.

SEE SHEET C0.01 FOR ALL PROJECT, SITE, GRADING, STORM DRAINAGE AND UTILITY NOTES

ALL CONSTRUCTION SHALL BE IN ACCORDANCE WITH THE CURRENT TOWN OF HILLSBOROUGH AND NCDOT STANDARDS, SPECIFICATIONS, AND DETAILS.

PRELIMINARY DRAWING - NOT RELEASED FOR CONSTRUCTION

McADAMS
The John R. McAdams Company, Inc.
2905 Meridian Parkway
Durham, NC 27713

phone 919. 361. 5000
fax 919. 361. 2269
license number: C-0293, C-187

www.mcadamsco.com

CLIENT

DR HORTON
2000 AERIAL DRIVE
MORRISVILLE, NC 27560
Contact
PHONE: 919. 460. 2943

D·R·HORTON America's Builder

COLLINS RIDGE - PHASE 2
SPECIAL USE PERMIT
258 ORANGE GROVE STREET
HILLSBOROUGH, NC

NORTH CAROLINA PROFESSIONAL SEAL 21543 ENGINEER BRADLEY A. RHINEHART
NOT FOR CONSTRUCTION

REVISIONS

NO.	DATE	
1	02. 24. 2023	REVISED PER TOWN COMMENTS
2	06. 02. 2023	REVISED PER TOWN COMMENTS
3	08. 04. 2023	REVISED PER TOWN COMMENTS
4	10. 19. 2023	REVISED PER TOWN COMMENTS
5	11. 03. 2023	REVISED PER TOWN COMMENTS
6	12. 04. 2023	REVISED PER TOWN COMMENTS

PLAN INFORMATION

PROJECT NO.	DRH-21002
FILENAME	DRH21002-S2
CHECKED BY	DLP
DRAWN BY	SJB
SCALE	1" = 60'
DATE	10. 17. 2022

SHEET

SIGNAGE AND PAVEMENT MARKING PLAN AREA "C"

C2.06

M:\Projects\DRH\DRH21002\04-Production\Engineering\Production Drawings\SUP 2\Current Drawings\Special Use Permit Drawings\DRH21002-S2.dwg, 12/1/2023 1:31:13 PM, Dwayne Peterson

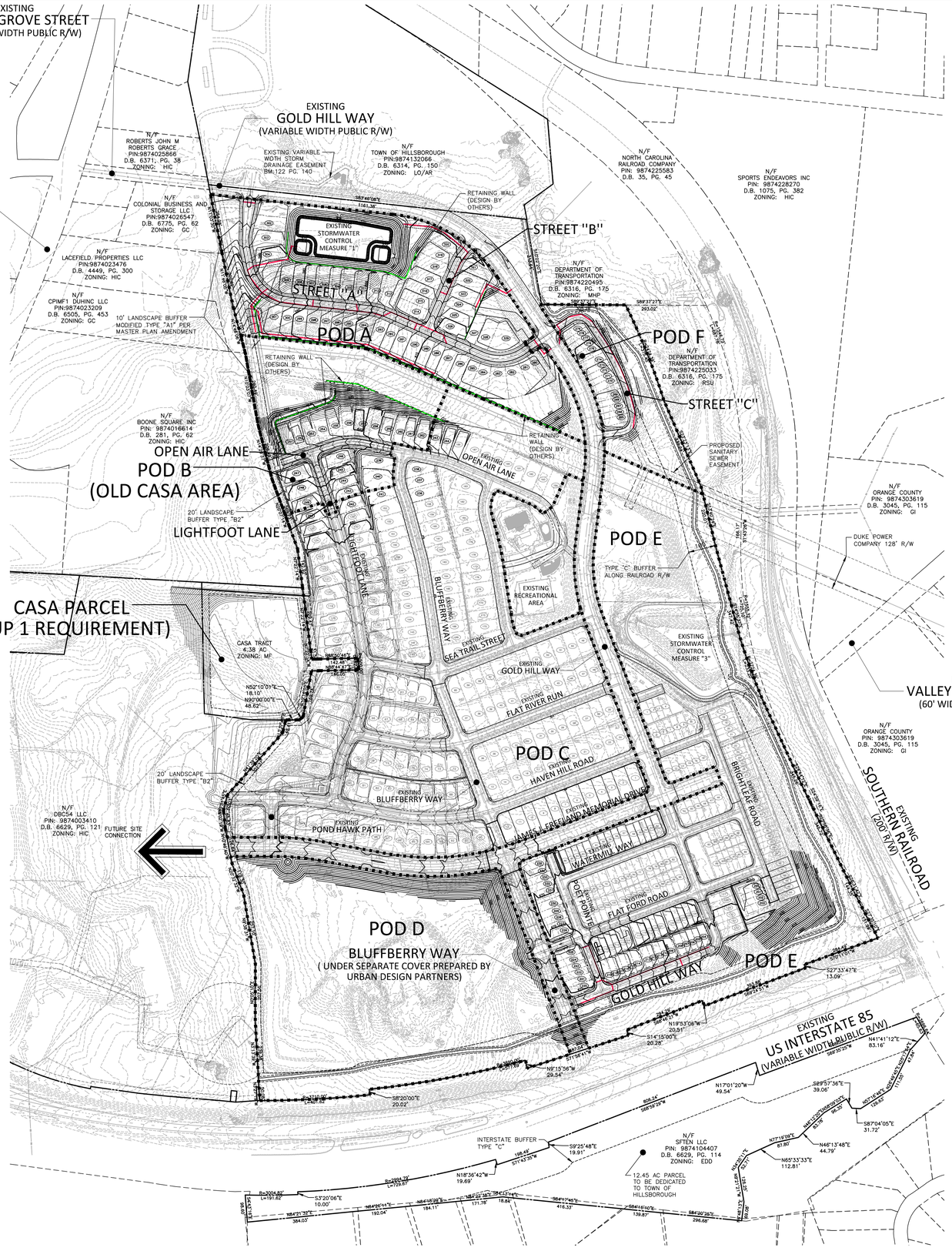

KEY MAP

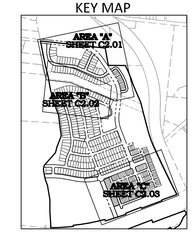

GRADING LEGEND

- FLARED END SECTION
- ENDWALL SECTION
- CATCH BASIN
- DROP INLET
- STORM SERVICE INLET
- STORM SERVICE ROOF–DRAIN
- JUNCTION BOX
- DRAINAGE FLOW ARROW
- LINE BREAK SYMBOL
- STORM DRAINAGE
- STORM SERVICE LINE
- TP — TP — TP — TREE PROTECTION FENCE
- LD — LD — LIMITS OF DISTURBANCE
- 250 MAJOR CONTOUR
- 252 MINOR CONTOUR
- 250 EXISTING MAJOR CONTOUR
- 252 EXISTING MINOR CONTOUR
- EASEMENT LINE
- PROPOSED RETAINING WALL

NOTE:

ALL PERMANENT SLOPES, INCLUDING SCM SIDE SLOPES, WILL BE CONSTRUCTED AT NO STEEPER THAN 3:1.

GRAPHIC SCALE

0 100 200 400

1 inch = 200 ft.

SEE SHEET C0.01 FOR ALL PROJECT, SITE, GRADING, STORM DRAINAGE AND UTILITY NOTES

ALL CONSTRUCTION SHALL BE IN ACCORDANCE WITH THE CURRENT TOWN OF HILLSBOROUGH AND NCDOT STANDARDS, SPECIFICATIONS, AND DETAILS.

PRELIMINARY DRAWING - NOT RELEASED FOR CONSTRUCTION

McADAMS

The John R. McAdams Company, Inc.
2905 Meridian Parkway
Durham, NC 27713

phone 919. 361. 5000
fax 919. 361. 2269
license number: C-0293, C-187

www.mcadamsco.com

CLIENT

DR HORTON
2000 AERIAL DRIVE
MORRISVILLE, NC 27560
Contact
PHONE: 919. 460. 2943

D·R·HORTON America's Builder

COLLINS RIDGE - PHASE 2
SPECIAL USE PERMIT
258 ORANGE GROVE STREET
HILLSBOROUGH, NC

NORTH CAROLINA PROFESSIONAL ENGINEER SEAL 21543 BRADLEY A. RHINEHART

PRELIMINARY NOT FOR CONSTRUCTION

REVISIONS

NO.	DATE	
1	02. 24. 2023	REVISED PER TOWN COMMENTS
2	06. 02. 2023	REVISED PER TOWN COMMENTS
3	08. 04. 2023	REVISED PER TOWN COMMENTS
4	10. 19. 2023	REVISED PER TOWN COMMENTS
5	11. 03. 2023	REVISED PER TOWN COMMENTS
6	12. 04. 2023	REVISED PER TOWN COMMENTS

PLAN INFORMATION

PROJECT NO.	DRH-21002
FILENAME	DRH21002-OAG1
CHECKED BY	DLP
DRAWN BY	SJB
SCALE	1" = 200'
DATE	10. 17. 2022

SHEET

OVERALL GRADING AND STORM DRAINAGE PLAN

C3.00

M:\Projects\DRH\DRH21002\04-Production\Engineering\Production Drawings\SUP 2\Current Drawings\Special Use Permit Drawings\DRH21002-OAG1.dwg, 12/1/2023 1:31:47 PM, Dwayne Peterson

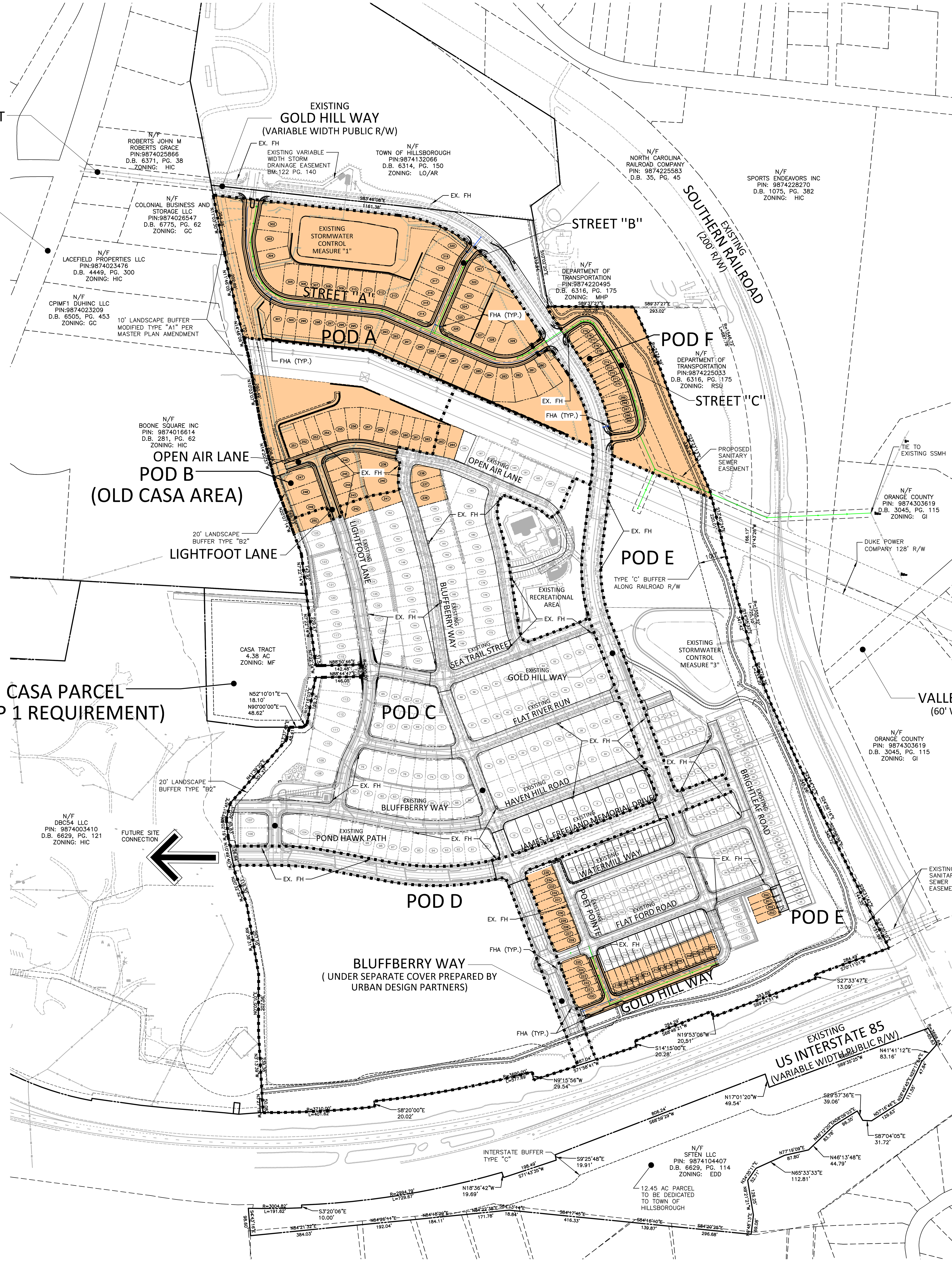

KEY MAP

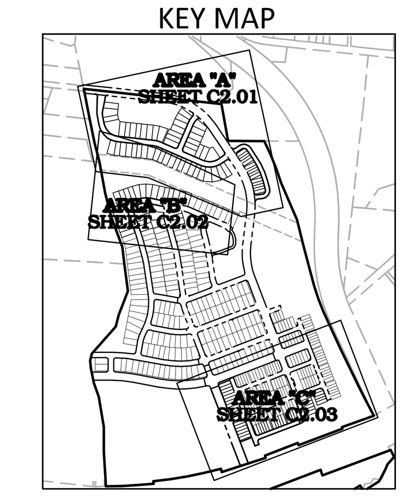

UTILITY LEGEND

- FIRE HYDRANT ASSEMBLY
- FIRE DEPARTMENT CONNECTION (FDC)
- WATER METER
- WATER VALVE
- POST INDICATOR VALVE
- VALVE IN MANHOLE
- METER & VAULT
- BACKFLOW PREVENTER
- REDUCER
- PLUG
- BLOW–OFF ASSEMBLY
- SANITARY SEWER MANHOLE
- SEWER CLEAN–OUT
- GREASE TRAP
- SEWER FLOW DIRECTION ARROW
- YARD LIGHTS
- LIGHT POLE
- POWER POLE
- LINE BREAK SYMBOL
- PROPOSED 8" WATERLINE
- WATER SERVICE LINE
- UTILITY SLEEVE
- PROPOSED 8" SANITARY SEWER
- SEWER SERVICE LINE
- FM — FM SEWER FORCE MAIN
- G — G — G — G GAS LINE
- OU — OU OVERHEAD UTILITY
- UE — UE UNDERGROUND ELECTRIC
- T — T — T — T TELEPHONE
- EASEMENT LINE

GRAPHIC SCALE
0 100 200 400
1 inch = 200 ft.

SEE SHEET C0.01 FOR ALL PROJECT, SITE, GRADING, STORM DRAINAGE AND UTILITY NOTES

ALL CONSTRUCTION SHALL BE IN ACCORDANCE WITH THE CURRENT TOWN OF HILLSBOROUGH AND NCDOT STANDARDS, SPECIFICATIONS, AND DETAILS.

PRELIMINARY DRAWING - NOT RELEASED FOR CONSTRUCTION

MCADAMS
The John R. McAdams Company, Inc.
2905 Meridian Parkway
Durham, NC 27713

phone 919. 361. 5000
fax 919. 361. 2269
license number: C-0293, C-187

www.mcadamsco.com

CLIENT

DR HORTON
2000 AERIAL DRIVE
MORRISVILLE, NC 27560
Contact
PHONE: 919. 460. 2943

D·R·HORTON
America's Builder

COLLINS RIDGE - PHASE 2
SPECIAL USE PERMIT
258 ORANGE GROVE STREET
HILLSBOROUGH, NC

NORTH CAROLINA PROFESSIONAL SEAL 21543 ENGINEER BRADLEY A. RHINEHALT
PRELIMINARY NOT FOR CONSTRUCTION

REVISIONS

NO.	DATE	
1	02. 24. 2023	REVISED PER TOWN COMMENTS
2	06. 02. 2023	REVISED PER TOWN COMMENTS
3	08. 04. 2023	REVISED PER TOWN COMMENTS
4	10. 19. 2023	REVISED PER TOWN COMMENTS
5	11. 03. 2023	REVISED PER TOWN COMMENTS
6	12. 04. 2023	REVISED PER TOWN COMMENTS

PLAN INFORMATION

PROJECT NO.	DRH-21002
FILENAME	DRH21002-OAU1
CHECKED BY	DLP
DRAWN BY	SJB
SCALE	1" = 200'
DATE	10. 17. 2022

SHEET

OVERALL UTILITY PLAN

C4.00

M:\Projects\DRH\DRH21002\04-Production\Engineering\Production Drawings\SUP 2\Current Drawings\Special Use Permit Drawings\DRH21002-OAU1.dwg, 12/1/2023 1:32:21 PM, Dwayne Peterson

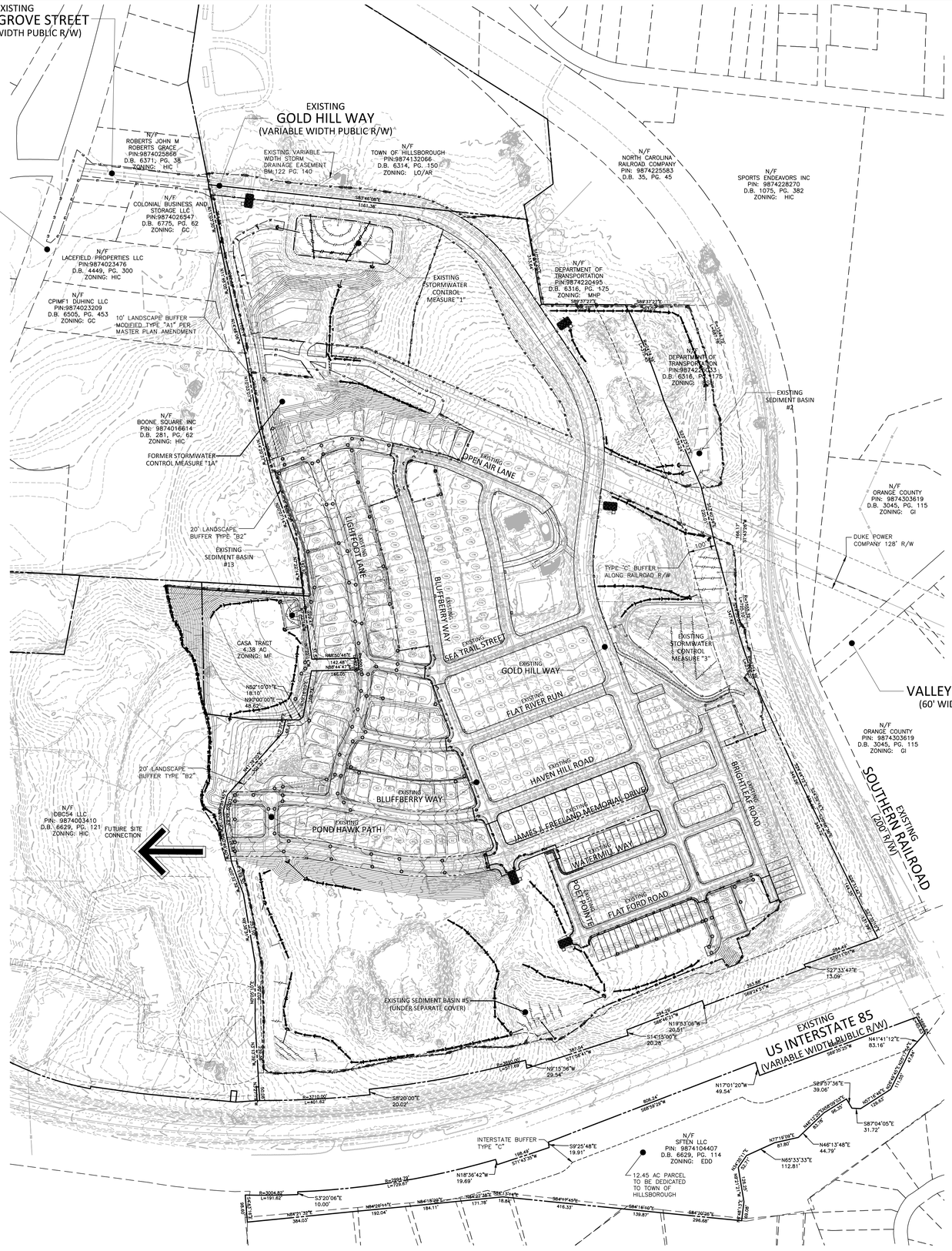

KEY MAP

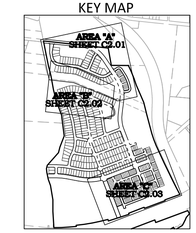

EROSION CONTROL LEGEND

	SILT FENCE OUTLET
	INLET PROTECTION
	INLET PROTECTION FOR EXISTING STRUCTURES
	TEMPORARY SLOPE DRAIN
	FILTER BERM
	CHECK DAM
SF SF SF	SILT FENCE
TP TP TP	TREE PROTECTION FENCE
LD LD	LIMITS OF DISTURBANCE
	WOODED AREA
	DIVERSION DITCH
	CONSTRUCTION ENTRANCE/EXIT

GRAPHIC SCALE
0 100 200 400
1 inch = 200 ft.

SEE SHEET C0.01 FOR ALL PROJECT, SITE, GRADING, STORM DRAINAGE AND UTILITY NOTES

ALL CONSTRUCTION SHALL BE IN ACCORDANCE WITH THE CURRENT TOWN OF HILLSBOROUGH AND NCDOT STANDARDS, SPECIFICATIONS, AND DETAILS.

PRELIMINARY DRAWING - NOT RELEASED FOR CONSTRUCTION

McADAMS
The John R. McAdams Company, Inc.
2905 Meridian Parkway
Durham, NC 27713

phone 919. 361. 5000
fax 919. 361. 2269
license number: C-0293, C-187

www.mcadamsco.com

CLIENT

DR HORTON
2000 AERIAL DRIVE
MORRISVILLE, NC 27560
Contact
PHONE: 919. 460. 2943

D·R·HORTON
America's Builder

COLLINS RIDGE - PHASE 2
SPECIAL USE PERMIT
258 ORANGE GROVE STREET
HILLSBOROUGH, NC

NORTH CAROLINA PROFESSIONAL SEAL 21543 ENGINEER BRADLEY A. RHINEHART
NOT FOR CONSTRUCTION

REVISIONS

NO.	DATE	
1	02. 24. 2023	REVISED PER TOWN COMMENTS
2	06. 02. 2023	REVISED PER TOWN COMMENTS
3	08. 04. 2023	REVISED PER TOWN COMMENTS
4	10. 19. 2023	REVISED PER TOWN COMMENTS
5	11. 03. 2023	REVISED PER TOWN COMMENTS
6	12. 04. 2023	REVISED PER TOWN COMMENTS

PLAN INFORMATION

PROJECT NO.	DRH-21002
FILENAME	DRH21002-OAEC1
CHECKED BY	DLP
DRAWN BY	SJB
SCALE	1" = 200'
DATE	10. 17. 2022

SHEET

OVERALL EROSION CONTROL PLAN - STAGE 1

C6.00

M:\Projects\DRH\DRH21002\04-Production\Engineering\Production Drawings\SUP 2\Current Drawings\Special Use Permit Drawing\DRH21002-OAEC1.dwg, 12/1/2023 1:32:51 PM, Dwayne Peterson

KEY MAP

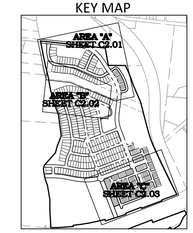

EROSION CONTROL LEGEND

- SILT FENCE OUTLET
- INLET PROTECTION
- INLET PROTECTION FOR EXISTING STRUCTURES
- TEMPORARY SLOPE DRAIN
- FILTER BERM
- CHECK DAM
- SF — SILT FENCE
- TP — TREE PROTECTION FENCE
- LD — LIMITS OF DISTURBANCE
- WOODED AREA
- DIVERSION DITCH
- CONSTRUCTION ENTRANCE/EXIT
- GRADING PROPOSED WITH SUP PHASE 2

NOTE:

AREAS IN HATCH SIGNIFY SUP 2 AREAS. ALL AREAS GRADED OUTSIDE OF THE SUP 2 HATCH ARE A PART OF COLLINS RIDGE PHASE 1B, WHICH IS UNDER SEPARATE COVER AND UNDER REVIEW BY TOWN OF HILLSBOROUGH.

GRAPHIC SCALE
0 100 200 400
1 inch = 200 ft.

SEE SHEET C0.01 FOR ALL PROJECT, SITE, GRADING, STORM DRAINAGE AND UTILITY NOTES

ALL CONSTRUCTION SHALL BE IN ACCORDANCE WITH THE CURRENT TOWN OF HILLSBOROUGH AND NCDOT STANDARDS, SPECIFICATIONS, AND DETAILS.

PRELIMINARY DRAWING - NOT RELEASED FOR CONSTRUCTION

McADAMS
The John R. McAdams Company, Inc.
2905 Meridian Parkway
Durham, NC 27713

phone 919. 361. 5000
fax 919. 361. 2269
license number: C-0293, C-187

www.mcadamsco.com

CLIENT

DR HORTON
2000 AERIAL DRIVE
MORRISVILLE, NC 27560
Contact
PHONE: 919. 460. 2943

D·R·HORTON America's Builder

COLLINS RIDGE - PHASE 2
SPECIAL USE PERMIT
258 ORANGE GROVE STREET
HILLSBOROUGH, NC

NORTH CAROLINA PROFESSIONAL SEAL 21543 ENGINEER BRADLEY A. RHINEHALT
NOT FOR CONSTRUCTION

REVISIONS

NO.	DATE	
1	02. 24. 2023	REVISED PER TOWN COMMENTS
2	06. 02. 2023	REVISED PER TOWN COMMENTS
3	08. 04. 2023	REVISED PER TOWN COMMENTS
4	10. 19. 2023	REVISED PER TOWN COMMENTS
5	11. 03. 2023	REVISED PER TOWN COMMENTS
6	12. 04. 2023	REVISED PER TOWN COMMENTS

PLAN INFORMATION

PROJECT NO.	DRH-21002
FILENAME	DRH21002-OAEC2
CHECKED BY	DLP
DRAWN BY	SJB
SCALE	1" = 200'
DATE	10. 17. 2022

SHEET

OVERALL EROSION CONTROL PLAN - STAGE 2

C6.10

M:\Projects\DRH\DRH21002\04-Production\Engineering\Production Drawings\SUP 2\Current Drawings\Special Use Permit Drawings\DRH21002-OAEC2.dwg, 12/1/2023 1:33:18 PM, Dwayne Peterson

NOTE:
TOWN OF HILLSBOROUGH REQUIRES DETECTIBLE DOMES TO BE BLACK IN COLOR.

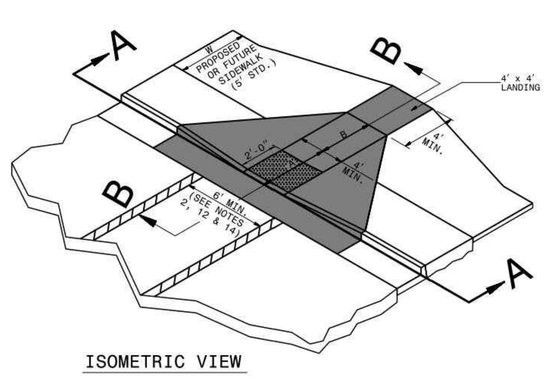

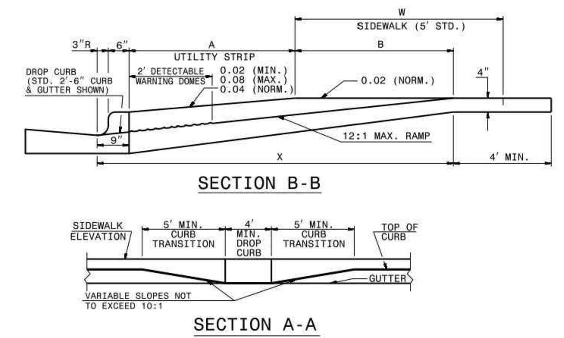

NOTES:
1. DETECTABLE WARNING DOMES WILL COVER 2'-0" LENGTH AND FULL WIDTH OF THE RAMP FLOOR AS SHOWN ON THE DETAILS.
2. DETECTABLE WARNING DOMES WILL CONTRAST VISIBILITY WITH ADJOINING SURFACE, EITHER LIGHT-ON-DARK, OR DARK-ON-LIGHT SEQUENCE COVERING THE ENTIRE RAMP.

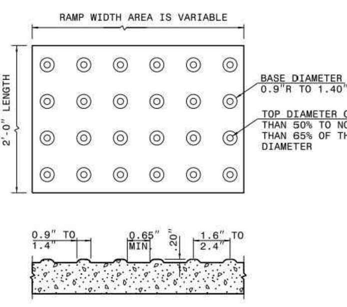

W	A	W+A+9"	X	B
5'	0.0'	5.8'	5.8'	5.0'*
6'	0.0'	6.8'	6.8'	6.0'**
7'	0.0'	7.8'	7.3'	6.5'**
8'	0.0'	8.8'	7.3'	6.5'**
5'	2.0'	7.8'	7.8'	5.0'
5'	2.5'	8.3'	8.1'	4.8'
5'	3.0'	8.8'	8.3'	4.4'
5'	3.5'	9.3'	8.4'	4.1'
5'	4.0'	9.8'	8.6'	3.8'
5'	4.5'	10.3'	8.7'	3.4'
5'	5.0'	10.8'	8.9'	3.1'

B = X-(A+9")
B = DISTANCE FROM FRONT EDGE OF SIDEWALK TO BACK POINT OF 12:1 (8.33%) SLOPE.
* BACK OF SIDEWALK DROP REQUIRED FOR ALL SIDEWALK SLOPES.
** BACK OF SIDEWALK DROP REQUIRED FOR SIDEWALK SLOPES 0.04.

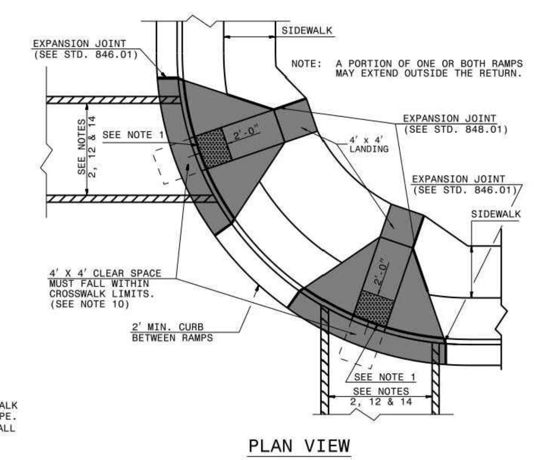

STATE OF NORTH CAROLINA DEPT. OF TRANSPORTATION DIVISION OF HIGHWAYS RALEIGH, N.C. 1-18
ROADWAY STANDARD DRAWING FOR **CURB RAMP** PROPOSED CURB AND GUTTER
SHEET 1 OF 3 **848.05**

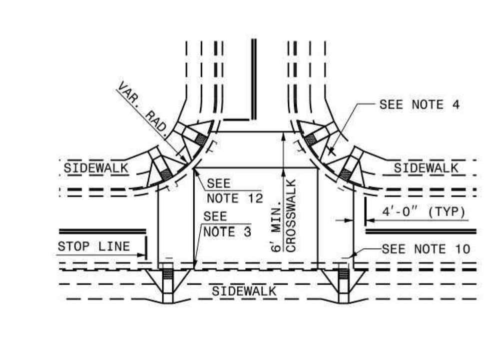

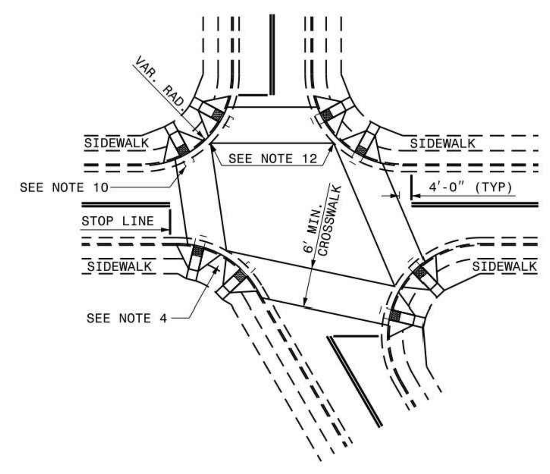

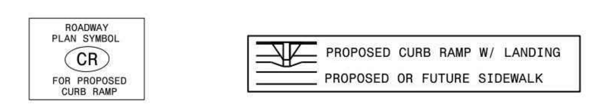

ALLOWABLE LOCATIONS
DUAL RAMP RADII..........ANY

STATE OF NORTH CAROLINA DEPT. OF TRANSPORTATION DIVISION OF HIGHWAYS RALEIGH, N.C. 1-18
ROADWAY STANDARD DRAWING FOR **CURB RAMP** PROPOSED CURB AND GUTTER
SHEET 2 OF 3 **848.05**

NOTES:
1. CONSTRUCT THE RAMP SURFACE TO BE STABLE, FIRM, AND SLIP RESISTANT. CONSTRUCT THE CURB RAMP TYPE AS SHOWN IN THE PAVEMENT MARKING PLANS OR AS DIRECTED BY THE ENGINEER.
2. LOCATE CURB RAMPS AND PLACE PEDESTRIAN CROSSWALK MARKINGS AS SHOWN IN THE PAVEMENT MARKING PLANS. WHEN FIELD ADJUSTMENTS REQUIRE MOVING CURB RAMPS OR MARKINGS AS SHOWN, CONTACT THE SIGNING AND DELINEATION UNIT OR LOCATE AS DIRECTED BY THE ENGINEER.
3. COORDINATE THE CURB RAMP AND THE PEDESTRIAN CROSSWALK MARKINGS SO A 4'x4' CLEAR SPACE AT THE BASE OF THE CURB RAMP WILL FALL WITHIN THE PEDESTRIAN CROSSWALK LINES.
4. SET BACK DISTANCE FROM INSIDE CROSSWALK MARKING TO NEAREST EDGE OF TRAVEL LANE IS 4' MINIMUM.
5. REFER TO THE PAVEMENT MARKING PLANS FOR STOP BAR LOCATIONS AT SIGNALIZED INTERSECTIONS. IF A PAVEMENT MARKING PLAN IS NOT PROVIDED, CONTACT THE SIGNAL DESIGN SECTION FOR THE STOP BAR LOCATIONS OR LOCATE AS DIRECTED BY THE ENGINEER.
6. TERMINATE PARKING A MINIMUM OF 20' BACK OF A PEDESTRIAN CROSSWALK.
7. CONSTRUCT CURB RAMPS A MINIMUM OF 4' WIDE.
8. CONSTRUCT THE RUNNING SLOPE OF THE RAMP 8.33% MAXIMUM.
9. ALLOWABLE CROSS SLOPE ON SIDEWALKS AND CURB RAMPS WILL BE 2% MAXIMUM.
10. CONSTRUCT THE SIDE FLARE SLOPE A MAXIMUM OF 10% MEASURED ALONG THE CURB LINE.
11. CONSTRUCT THE COUNTER SLOPE OF THE GUTTER OR STREET AT THE BASE OF THE CURB RAMP A MAXIMUM OF 5% AND MAINTAIN A SMOOTH TRANSITION.
12. CONSTRUCT LANDINGS FOR SIDEWALK A MINIMUM OF 4'x4' WITH A MAXIMUM SLOPE OF 2% IN ANY DIRECTION. CONSTRUCT LANDINGS FOR MEDIAN ISLANDS A MINIMUM OF 5'x5' WITH A MAXIMUM SLOPE OF 2% IN ANY DIRECTION.
13. TO USE A MEDIAN ISLAND AS A PEDESTRIAN REFUGE AREA, MEDIAN ISLANDS WILL BE A MINIMUM OF 6' WIDE. CONSTRUCT MEDIAN ISLANDS TO PROVIDE PASSAGE OVER OR THROUGHT THE ISLAND.
14. SMALL CHANNELIZATION ISLANDS THAT CAN NOT PROVIDE A 5'X5' LANDING AT THE TOP OF A RAMPS, WILL BE CUT THROUGH LEVEL WITH THE SURFACE STREET.
15. CURB RAMPS WITH RETURNED CURBS MAY BE USED ONLY WHERE PEDESTRIANS WOULD NOT NORMALLY WALK ACROSS THE RAMP. THE ADJACENT SURFACE IS PLANTING OR OTHER NON-WALKING SURFACE OR THE SIDE APPROACH IS SUBSTANTIALLY OBSTRUCTED.
16. PLACE A ½" EXPANSION JOINT WHERE THE CONCRETE CURB RAMP JOINS THE CURB AS SHOWN IN ROADWAY STANDARD DRAWING 848.01
17. PLACE ALL PEDESTRIAN PUSH BUTTON ACTUATORS AND CROSSING SIGNALS AS SHOWN IN THE PLANS OR AS SHOWN IN THE MUTCD.
18. CURB RAMPS THROUGH MEDIAN ISLANDS, SINGLE RAMPS AT DUAL CROSSWALKS OR LIMITED R/W SITUATIONS, WILL BE HANDLED BY SPECIAL DETAILS. CONTACT THE CONTRACT STANDARDS AND DEVELOPMENT UNIT FOR THE DETAILS OR FOR A SPECIAL DESIGN.

STATE OF NORTH CAROLINA DEPT. OF TRANSPORTATION DIVISION OF HIGHWAYS RALEIGH, N.C. 1-18
ROADWAY STANDARD DRAWING FOR **CURB RAMPS** NOTES
SHEET 3 OF 3 **848.05**

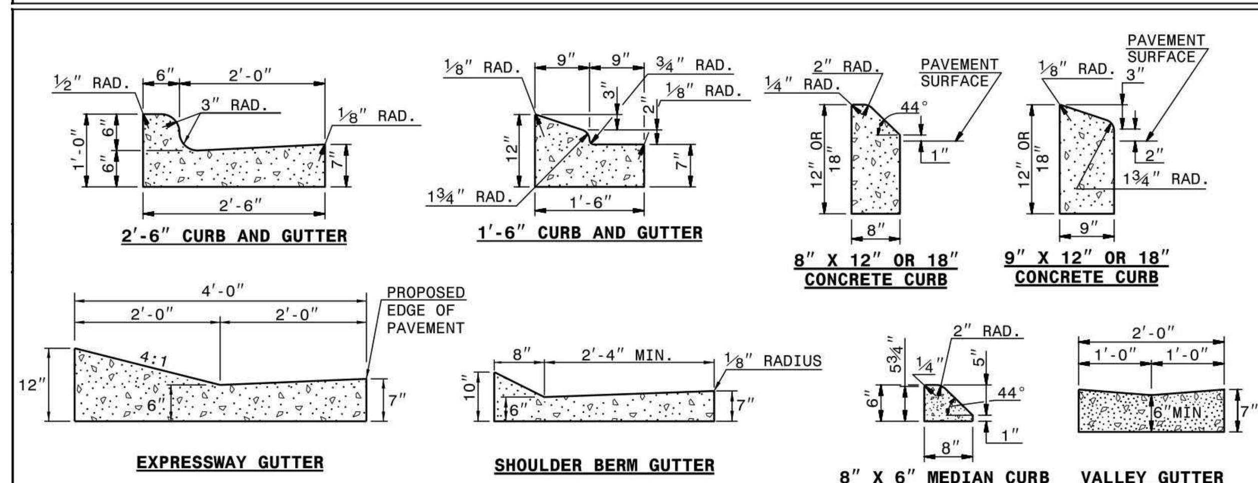

SECTION VIEW OF CURBS OR CURBS AND GUTTERS

GENERAL NOTES:
- PLACE CONTRACTION JOINTS AT 10' INTERVALS, EXCEPT THAT A 15' SPACING MAY BE USED WHEN A MACHINE IS USED OR WHEN SATISFACTORY SUPPORT FOR THE FACE FORM CAN BE OBTAINED WITHOUT THE USE OF TEMPLATES AT 10' INTERVALS.
- JOINT SPACING MAY BE ALTERED IF REQUIRED BY THE ENGINEER.
- CONTRACTION JOINTS MAY BE INSTALLED WITH THE USE OF TEMPLATES OR FORMED BY OTHER APPROVED METHODS. CONSTRUCT NON-TEMPLATE FORMED JOINTS A MIN. OF 1½" DEEP.
- FILL ALL CONSTRUCTION JOINTS, EXCEPT IN 8"x6" MEDIAN CURB, WITH JOINT FILLER AND SEALER.
- SPACE EXPANSION JOINTS AT 90' INTERVALS AND ADJACENT TO ALL RIGID OBJECTS.

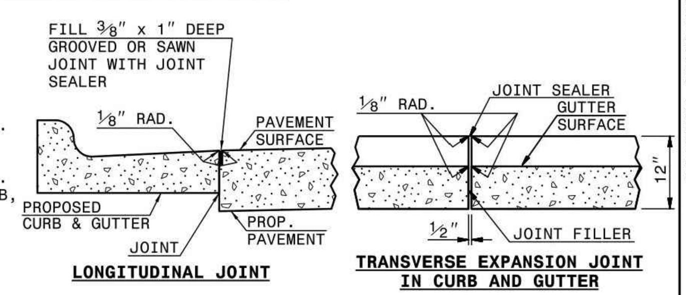

SECTION VIEW OF JOINTS

STATE OF NORTH CAROLINA DEPT. OF TRANSPORTATION DIVISION OF HIGHWAYS RALEIGH, N.C. 1-18
ROADWAY STANDARD DRAWING FOR **CONCRETE CURB, GUTTER AND CURB & GUTTER**
SHEET 1 OF 3 **846.01**

NOTES:

CONSTRUCT STANDARD SIDEWALK 5' WIDE AND 4" THICK UNLESS OTHERWISE DENOTED ON PLANS.

PLACE A GROOVE JOINT 1" DEEP WITH ⅛" RADII IN THE CONCRETE SIDEWALK AT 5' INTERVALS. ONE ½" EXPANSION JOINT WILL BE REQUIRED AT 50' INTERVALS. A ½" EXPANSION JOINT WILL BE REQUIRED WHERE THE SIDEWALK JOINS ANY RIGID STRUCTURE.

SEE STD. DWG. 848.05 FOR CURB RAMP LOCATION REQUIREMENTS AND CONSTRUCTION GUIDELINES.

NOTE:
TOWN OF HILLSBOROUGH REQUIRES SIDEWALKS TO BE A MINIMUM OF 5" THICKNESS WHEN NOT WITHIN DRIVEWAYS. SIDEWALK SHALL BE A MINIMUM OF 6" THICKNESS WITHIN DRIVEWAYS.

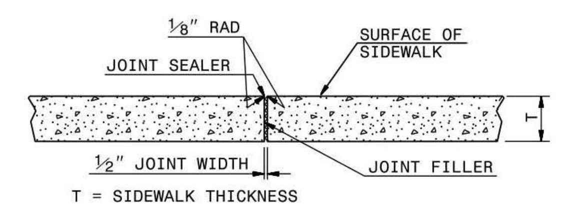

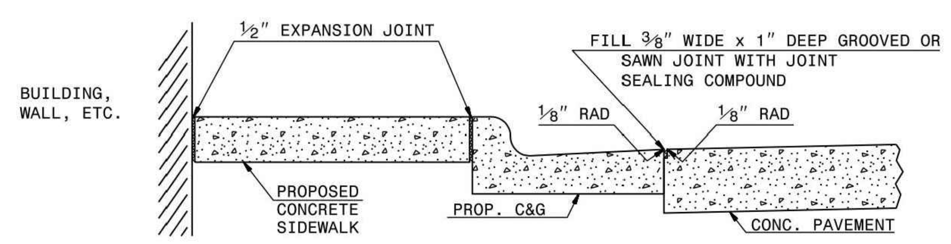

STATE OF NORTH CAROLINA DEPT. OF TRANSPORTATION DIVISION OF HIGHWAYS RALEIGH, N.C. 1-18
ROADWAY STANDARD DRAWING FOR **CONCRETE SIDEWALK**
SHEET 1 OF 1 **848.01**

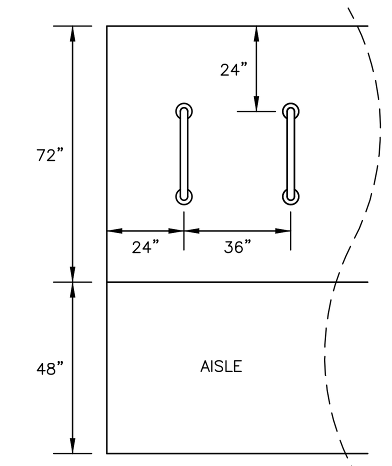

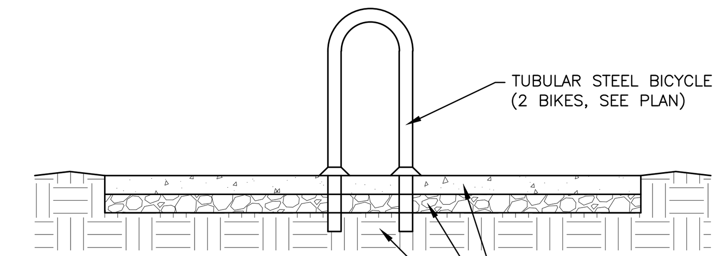

BICYCLE RACK
N.T.S.

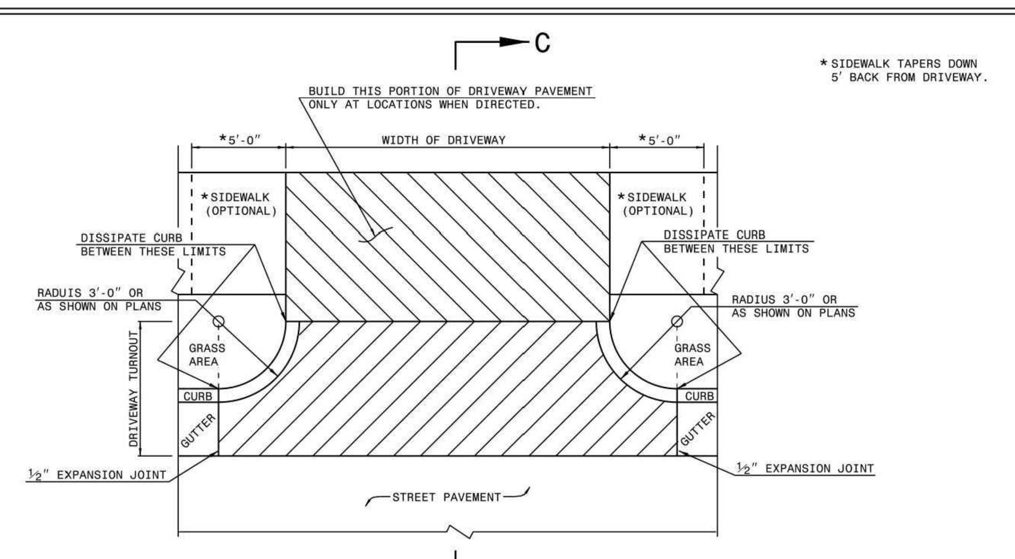

PLAN
DETAIL OF DRIVEWAY

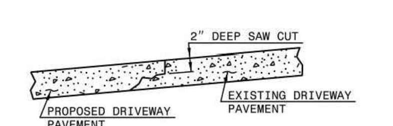

METHOD OF TIE IN

WHEN EXISTING DRIVEWAY PAVEMENT IS CONCRETE, SAW CUT 2" DEEP JOINT AT THE POINT OF TIE-IN. SAW JOINT PERPENDICULAR TO EDGE OF EXISTING DRIVEWAY PAVEMENT.

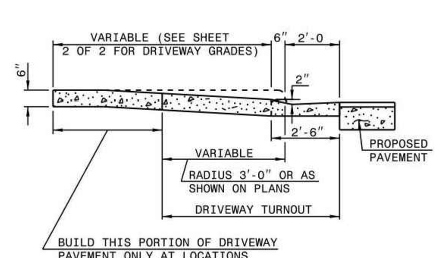

SECTION C-C

STATE OF NORTH CAROLINA DEPT. OF TRANSPORTATION DIVISION OF HIGHWAYS RALEIGH, N.C. 1-18
ROADWAY STANDARD DRAWING FOR **DRIVEWAY TURNOUT** RADIUS TYPE
SHEET 1 OF 2 **848.02**

DESIRABLE DRIVEWAY GRADES

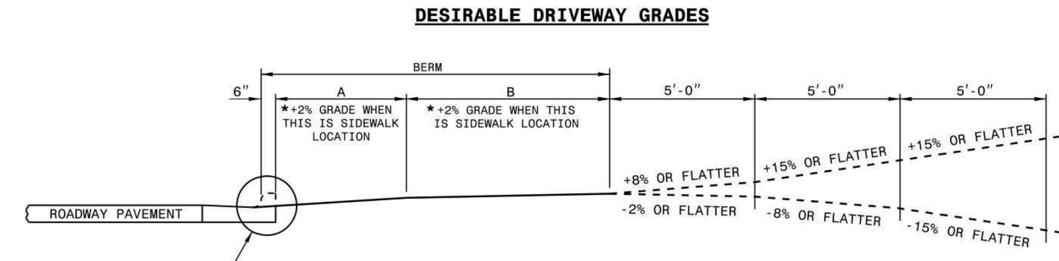

*SIDEWALK LOCATION
(DO NOT PLACE SIDEWALK ON BERMS LESS THAN 6' WIDE.)

DESIRABLE OR MAXIMUM DRIVEWAY GRADES

BERM WIDTH	A DIST.	A GRADE	B DIST.	B GRADE
8' OR LESS	5'-0"	+2%*	2'-6"	+5%
8' OR LESS	2'-0"	+6%	5'-6"	+2%*
10'	4'-0"	+4%	5'-6"	+2%*
12' & OVER	4'-6"	+4%	7'-0"	+2%*

MAXIMUM DRIVEWAY GRADES

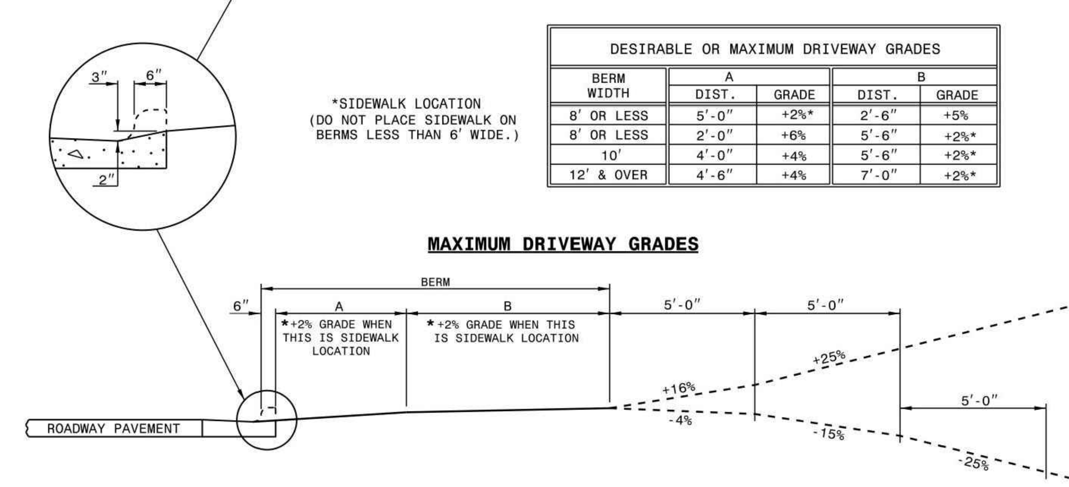

STATE OF NORTH CAROLINA DEPT. OF TRANSPORTATION DIVISION OF HIGHWAYS RALEIGH, N.C. 1-18
ROADWAY STANDARD DRAWING FOR **DRIVEWAY TURNOUT** DRIVEWAY GRADES
SHEET 2 OF 2 **848.02**

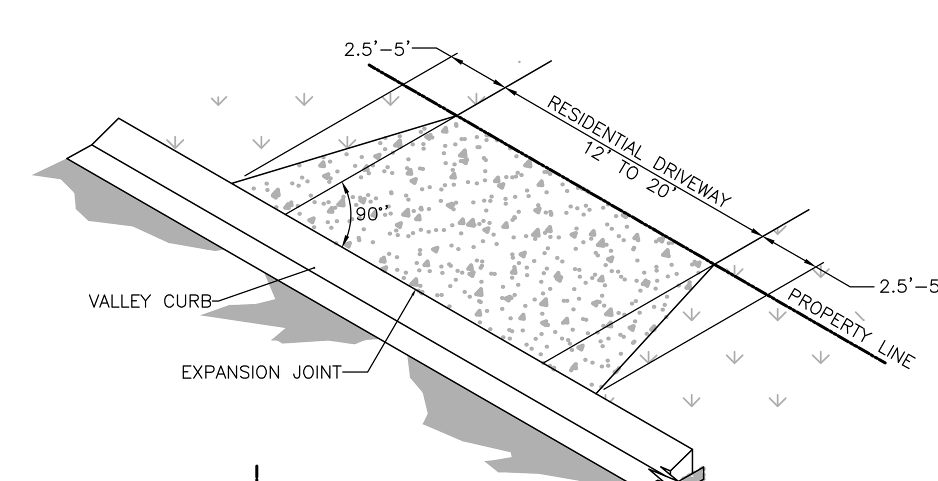

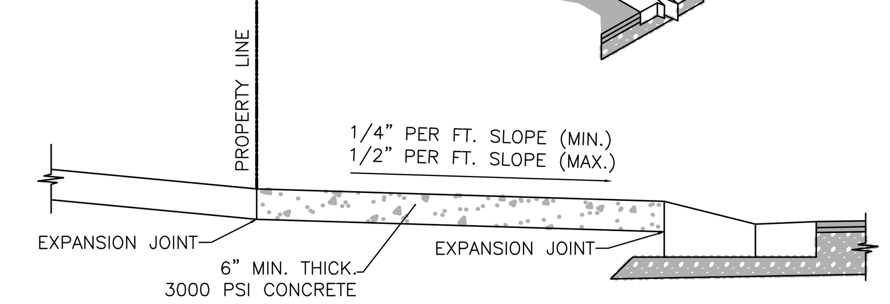

NOTES:
1. CURB AND GUTTER SECTION WILL BE POURED CONTINUOUS THROUGH THE STANDARD AND ALTERNATE DRIVEWAY WITH FACE OF CURB DROPPED DOWN AS SHOWN.
2. DRIVEWAY WILL BE CONSTRUCTED AFTER THE CURB FORMS HAVE BEEN REMOVED.
3. CONCRETE SHALL BE NON–REINFORCED, AIR–ENTRAINED WITH A MINIMUM STRENGTH OF 3000 LBS.

DRIVEWAY FOR VALLEY CURB
STREET SECTION (RESIDENTIAL)

ALL CONSTRUCTION SHALL BE IN ACCORDANCE WITH THE CURRENT TOWN OF HILLSBOROUGH AND NCDOT STANDARDS, SPECIFICATIONS, AND DETAILS.

PRELIMINARY DRAWING - NOT RELEASED FOR CONSTRUCTION

MCADAMS
The John R. McAdams Company, Inc.
2905 Meridian Parkway
Durham, NC 27713

phone 919. 361. 5000
fax 919. 361. 2269
license number: C-0293, C-187

www.mcadamsco.com

CLIENT

DR HORTON
2000 AERIAL DRIVE
MORRISVILLE, NC 27560
Contact
PHONE: 919. 460. 2943

D·R·HORTON America's Builder

COLLINS RIDGE - PHASE 2
SPECIAL USE PERMIT
258 ORANGE GROVE STREET
HILLSBOROUGH, NC

NORTH CAROLINA PROFESSIONAL SEAL 21543 ENGINEER BRADLEY A. RHINEHALT
PRELIMINARY NOT FOR CONSTRUCTION

REVISIONS

NO.	DATE	
1	02. 24. 2023	REVISED PER TOWN COMMENTS
2	06. 02. 2023	REVISED PER TOWN COMMENTS
3	08. 04. 2023	REVISED PER TOWN COMMENTS
4	10. 19. 2023	REVISED PER TOWN COMMENTS
5	11. 03. 2023	REVISED PER TOWN COMMENTS
6	12. 04. 2023	REVISED PER TOWN COMMENTS

PLAN INFORMATION

PROJECT NO.	DRH-21002
FILENAME	DRH21002-D1
CHECKED BY	DLP
DRAWN BY	SJB
SCALE	NTS
DATE	10. 17. 2022

SHEET

SITE DETAILS

C8.00

M:\Projects\DRH\DRH21002\04-Production\Engineering\Production Drawings\SUP 2\Current Drawings\Special Use Permit Drawings\DRH21002-D1.dwg, 12/1/2023 1:33:29 PM, Dwayne Peterson

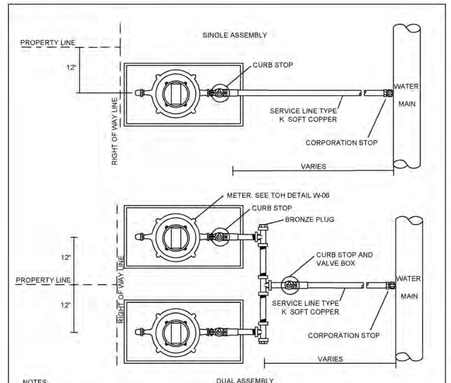

NOTES:

1. ALL WATER METER LOCATIONS SHALL BE COORDINATED WITH THE METER READER SUPERVISOR
2. METERS WILL BE GROUPED IN PAIRS AT ADJOINING PROPERTY LINES
3. EACH SERVICE SHALL HAVE ITS OWN CURBSTOP/BALLSTOP IN ITS OWN METER BOX
4. MINIMUM SERVICE LINE IS 1"
5. FOR DUAL ASSEMBLY INSTALLATION, USE FORD BALL VALVE CURB STOP (B44-444-Q) ON SERVICE PRIOR TO TEE AND STANDARD VALVE BOX

SIZE (I.D.) (SERVICE TAP SIZE FROM MAIN)	NUMBER OF METERED SERVICES ALLOWED	
2"	3/4"	1"
1 1/2"	5-8	5-8
1"	4	2

rev	description	appr'd	date
		KPK	
		KPK	

Town of Hillsborough
PO Box 429
101 East Orange Street
Hillsborough, North Carolina 27278
919.732.1270

WATER METER LOCATION

scale NTS drawing no. W-09
date JUNE 2012
approved
Kenneth P. Kent, P.E., Town Engineer

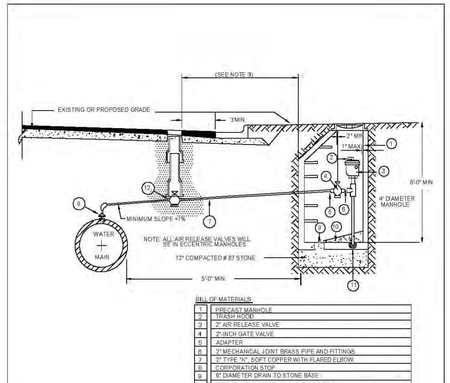

BILL OF MATERIALS:

1	PRECAST MANHOLE
2	TRASH ROCK
3	2" AIR RELEASE VALVE
4	2"-INCH GATE VALVE
5	ADAPTER
6	2" MECHANICAL JOINT BRASS PIPE AND FITTINGS
7	2" TYPE "K", SOFT COPPER WITH FLARED ELBOW
8	CORPORATION STOP
9	8" DIAMETER DRAIN TO STONE BASE
10	GROUT, 1/8" TO 1/-0" MIN. SLOPE TO DRAIN
11	PIPE CAP
12	2"-INCH GATE VALVE

NOTES:

1. AIR VALVE TO BE A.R.I D-020 VENT-O-MAT SERIES RBX OR EQUAL.
2. THE AIR RELEASE MANHOLE SHALL BE INSTALLED IN THE SHOULDER OR AS DIRECTED BY THE ENGINEER.
3. FOR MAINS LOCATED OUTSIDE OF STREET RIGHT-OF-WAYS, THE MAXIMUM DISTANCE BETWEEN THE MANHOLE AND THE VALVE BOX SHOULD BE THREE (3) FEET.

rev	description	appr'd	date
		KPK	
		KPK	

Town of Hillsborough
PO Box 429
101 East Orange Street
Hillsborough, North Carolina 27278
919.732.1270

AIR RELEASE VALVE-WATER

scale NTS drawing no. W-10
date JUNE 2012
approved
Kenneth P. Kent, P.E., Town Engineer

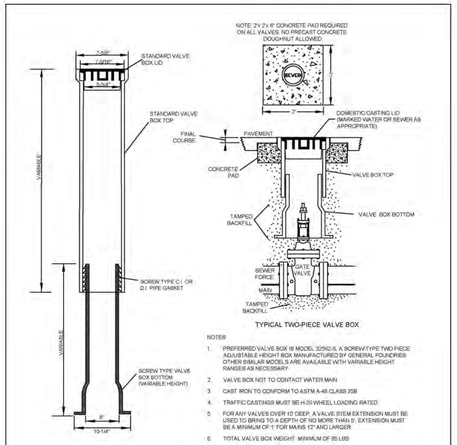

TYPICAL TWO-PIECE VALVE BOX.

NOTES:

1. PREFERRED VALVE BOX IS MODEL 2250-5, A SCREW TYPE TWO PIECE ADJUSTABLE HEIGHT BOX MANUFACTURED BY GENERAL FOUNDRIES OTHER SIMILAR MODELS ARE AVAILABLE WITH VARIABLE HEIGHT RANGES AS NECESSARY.
2. VALVE BOX MUST TO CONTACT WATER MAIN
3. CAST IRON TO CONFORM TO ASTM A-48 CLASS 35B
4. TRAFFIC CASTINGS MUST BE H-20 WHEEL LOADING RATED
5. FOR ANY VALVES OVER 10' DEEP, A VALVE STEM EXTENSION MUST BE USED TO BRING TO A DEPTH OF NO MORE THAN 5'. EXTENSION MUST BE A MINIMUM OF 1' FOR MAINS 12" AND LARGER
6. TOTAL VALVE BOX WEIGHT MINIMUM OF 85 LBS

rev	description	appr'd	date
		KPK	
		KPK	

Town of Hillsborough
PO Box 429
101 East Orange Street
Hillsborough, North Carolina 27278
919.732.1270

VALVE BOX ASSEMBLY AND GATE VALVE

scale NTS drawing no. WS-01
date JUNE 2012
approved
Kenneth P. Kent, P.E., Town Engineer

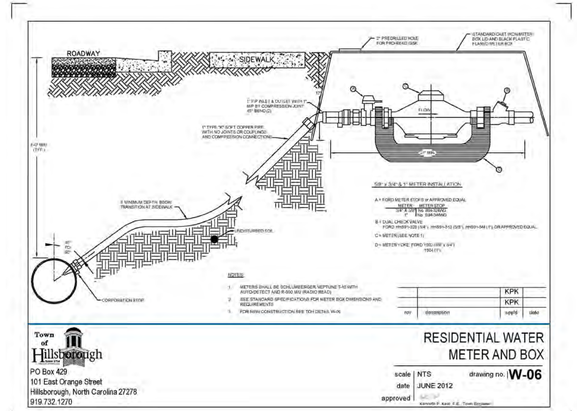

rev	description	appr'd	date
		KPK	
		KPK	

Town of Hillsborough
PO Box 429
101 East Orange Street
Hillsborough, North Carolina 27278
919.732.1270

RESIDENTIAL WATER METER AND BOX

scale NTS drawing no. W-06
date JUNE 2012
approved
Kenneth P. Kent, P.E., Town Engineer

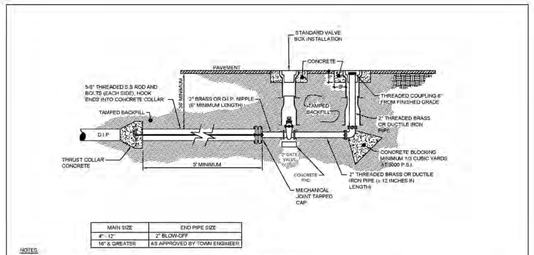

MAIN SIZE	END PIPE SIZE
4" - 12"	2" BLOWOFF
14" & GREATER	AS APPROVED BY TOWN ENGINEER

NOTES:

1. FOR MAINS THAT ARE TO BE EXTENDED, USE A VALVE EQUAL TO THE MAIN SIZE AS THE BLOWOFF VALVE AND THEN REDUCE TO THE 2" STANDPIPE
2. RODS SHALL BE "HOOKED" INTO "THRUST COLLAR"

rev	description	appr'd	date
		KPK	
		KPK	

Town of Hillsborough
PO Box 429
101 East Orange Street
Hillsborough, North Carolina 27278
919.732.1270

BLOW-OFF DETAIL

scale NTS drawing no. W-11
date JUNE 2012
approved
Kenneth P. Kent, P.E., Town Engineer

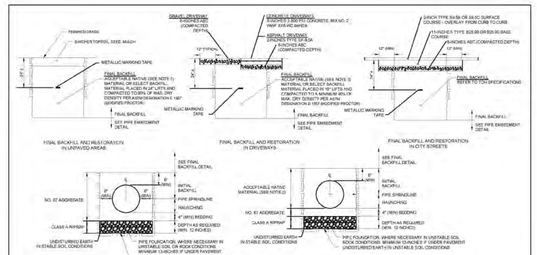

NOTES:

1. REFERENCE TOH CODE SECTION 7-20-5 FOR STREET SIGNS & PAVEMENTS. MATERIALS AND TESTING STANDARDS (REFERENCED IN DOT STANDARDS)
2. SUITABLE MATERIAL SHALL NOT CONTAIN ANY ROCKS GREATER THAN 3 INCHES AND FREE OF VEGETATION AND DEBRIS
3. SUITABLE MATERIAL SHALL NOT CONTAIN ANY ROCKS GREATER THAN 6 INCHES AND FREE OF VEGETATION AND DEBRIS

rev	description	appr'd	date
		KPK	
		KPK	

Town of Hillsborough
PO Box 429
101 East Orange Street
Hillsborough, North Carolina 27278
919.732.1270

TRENCH DETAILS

scale NTS drawing no. WS-03
date JUNE 2012
approved
Kenneth P. Kent, P.E., Town Engineer

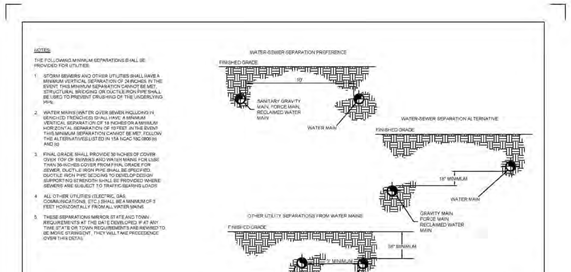

rev	description	appr'd	date
		KPK	
		KPK	

Town of Hillsborough
PO Box 429
101 East Orange Street
Hillsborough, North Carolina 27278
919.732.1270

UTILITY SEPARATION

scale NTS drawing no. G-01
date JUNE 2012
approved
Kenneth P. Kent, P.E., Town Engineer

ALL CONSTRUCTION SHALL BE IN ACCORDANCE WITH THE CURRENT TOWN OF HILLSBOROUGH AND NCDOT STANDARDS, SPECIFICATIONS, AND DETAILS.

PRELIMINARY DRAWING - NOT RELEASED FOR CONSTRUCTION

MCADAMS
The John R. McAdams Company, Inc.
2905 Meridian Parkway
Durham, NC 27713

phone 919. 361. 5000
fax 919. 361. 2269
license number: C-0293, C-187

www.mcadamsco.com

CLIENT

DR HORTON
2000 AERIAL DRIVE
MORRISVILLE, NC 27560
Contact
PHONE: 919. 460. 2943

D·R·HORTON America's Builder

COLLINS RIDGE - PHASE 2
SPECIAL USE PERMIT
258 ORANGE GROVE STREET
HILLSBOROUGH, NC

NORTH CAROLINA PROFESSIONAL SEAL 21543 ENGINEER BRADLEY A. RHINEHART
NOT FOR CONSTRUCTION

REVISIONS

NO.	DATE	
1	02. 24. 2023	REVISED PER TOWN COMMENTS
2	06. 02. 2023	REVISED PER TOWN COMMENTS
3	08. 04. 2023	REVISED PER TOWN COMMENTS
4	10. 19. 2023	REVISED PER TOWN COMMENTS
5	11. 03. 2023	REVISED PER TOWN COMMENTS
6	12. 04. 2023	REVISED PER TOWN COMMENTS

PLAN INFORMATION

PROJECT NO.	DRH-21002
FILENAME	DRH21002-D1
CHECKED BY	DLP
DRAWN BY	SJB
SCALE	NTS
DATE	10. 17. 2022

SHEET

WATER DETAILS

C8.01

M:\Projects\DRH\DRH21002\04-Production\Engineering\Production Drawings\SUP 2\Current Drawings\Special Use Permit Drawing\DRH21002-D1.dwg, 12/1/2023 1:33:30 PM, Dwayne Peterson

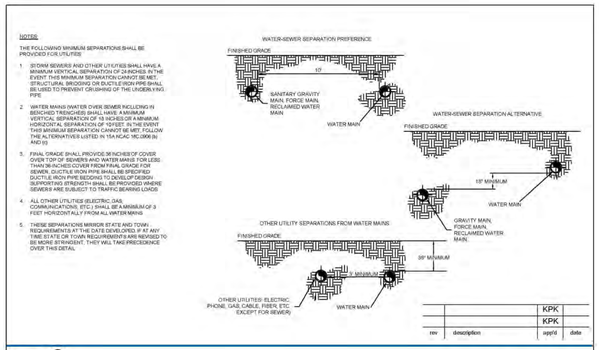

rev	description	app'd	date
		KPK	
		KPK	

Town of Hillsborough

PO Box 429
101 East Orange Street
Hillsborough, North Carolina 27278
919.732.1270

UTILITY SEPARATION

scale | NTS drawing no. | **G-01**
date | JUNE 2012
approved | Kenneth P. Keel, P.E., Town Engineer

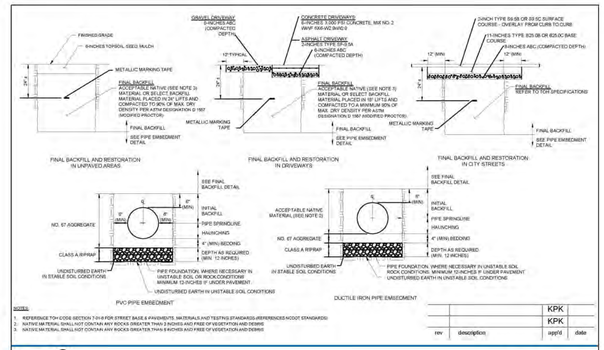

rev	description	app'd	date
		KPK	
		KPK	

Town of Hillsborough

PO Box 429
101 East Orange Street
Hillsborough, North Carolina 27278
919.732.1270

TRENCH DETAILS

scale | NTS drawing no. | **WS-03**
date | JUNE 2012
approved | Kenneth P. Keel, P.E., Town Engineer

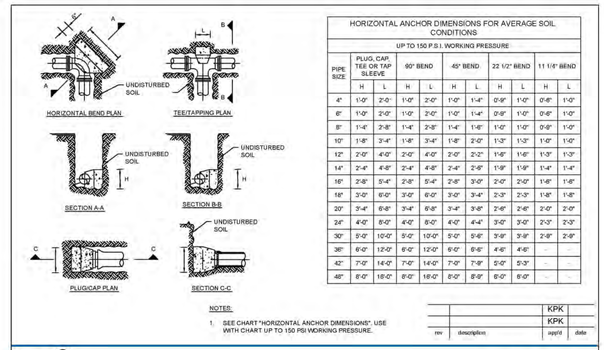

HORIZONTAL ANCHOR DIMENSIONS FOR AVERAGE SOIL CONDITIONS

UP TO 150 P.S.I. WORKING PRESSURE

PIPE SIZE	PLUG, CAP, TEE OR TAP SLEEVE		90° BEND		45° BEND		22 1/2° BEND		11 1/8° BEND	
	H	L	H	L	H	L	H	L	H	L
4"	1'-0"	2'-0"	1'-0"	2'-0"	1'-0"	1'-4"	0'-9"	1'-0"	0'-6"	1'-0"
6"	1'-0"	2'-0"	1'-0"	2'-0"	1'-0"	1'-4"	0'-9"	1'-0"	0'-6"	1'-0"
8"	1'-4"	2'-8"	1'-4"	2'-8"	1'-4"	1'-8"	1'-0"	1'-0"	0'-6"	1'-0"
10"	1'-8"	3'-4"	1'-8"	3'-4"	1'-8"	2'-0"	1'-3"	1'-3"	1'-0"	1'-0"
12"	2'-0"	4'-0"	2'-0"	4'-0"	2'-0"	2'-2"	1'-6"	1'-6"	1'-3"	1'-3"
14"	2'-4"	4'-8"	2'-4"	4'-8"	2'-4"	2'-8"	1'-9"	1'-9"	1'-4"	1'-4"
16"	2'-8"	5'-4"	2'-8"	5'-4"	2'-8"	3'-0"	2'-0"	2'-0"	1'-6"	1'-6"
18"	3'-0"	6'-0"	3'-0"	6'-0"	3'-0"	3'-4"	2'-3"	2'-3"	1'-8"	1'-8"
20"	3'-4"	6'-8"	3'-4"	6'-8"	3'-4"	3'-8"	2'-6"	2'-6"	2'-0"	2'-0"
24"	4'-0"	8'-0"	4'-0"	8'-0"	4'-0"	4'-4"	3'-0"	3'-0"	2'-3"	2'-3"
30"	5'-0"	10'-0"	5'-0"	10'-0"	5'-0"	5'-8"	3'-9"	3'-9"	2'-9"	2'-9"
36"	6'-0"	12'-0"	6'-0"	12'-0"	6'-0"	6'-8"	4'-6"	4'-6"	–	–
42"	7'-0"	14'-0"	7'-0"	14'-0"	7'-0"	7'-8"	5'-0"	5'-3"	–	–
48"	8'-0"	16'-0"	8'-0"	16'-0"	8'-0"	8'-8"	6'-0"	6'-0"	–	–

rev	description	app'd	date
		KPK	
		KPK	

Town of Hillsborough

PO Box 429
101 East Orange Street
Hillsborough, North Carolina 27278
919.732.1270

THRUST BLOCKING

scale | NTS drawing no. | **WS-02**
date | JUNE 2012
approved | Kenneth P. Keel, P.E., Town Engineer

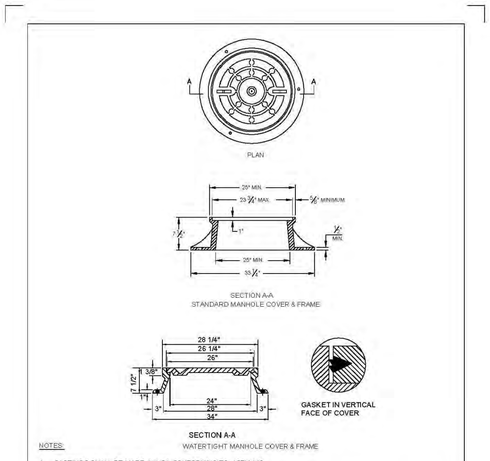

rev	description	app'd	date
		KPK	
		KPK	

Town of Hillsborough

PO Box 429
101 East Orange Street
Hillsborough, North Carolina 27278
919.732.1270

FRAMES AND COVER

scale | NTS drawing no. | **S-09**
date | JUNE 2012
approved | Kenneth P. Keel, P.E., Town Engineer

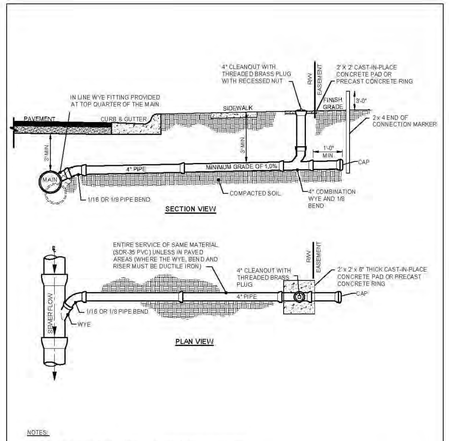

rev	description	app'd	date
		KPK	
		KPK	

Town of Hillsborough

PO Box 429
101 East Orange Street
Hillsborough, North Carolina 27278
919.732.1270

SEWER SERVICE AND CLEANOUT WITH COLLAR

scale | NTS drawing no. | **S-03**
date | JUNE 2012
approved | Kenneth P. Keel, P.E., Town Engineer

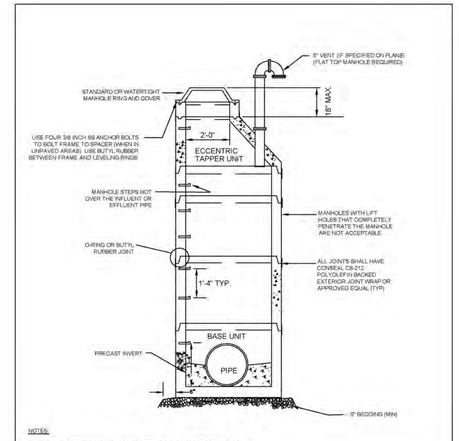

rev	description	app'd	date
		KPK	
		KPK	

Town of Hillsborough

PO Box 429
101 East Orange Street
Hillsborough, North Carolina 27278
919.732.1270

PRECAST CONCRETE MANHOLE

scale | NTS drawing no. | **S-08**
date | JUNE 2012
approved | Kenneth P. Keel, P.E., Town Engineer

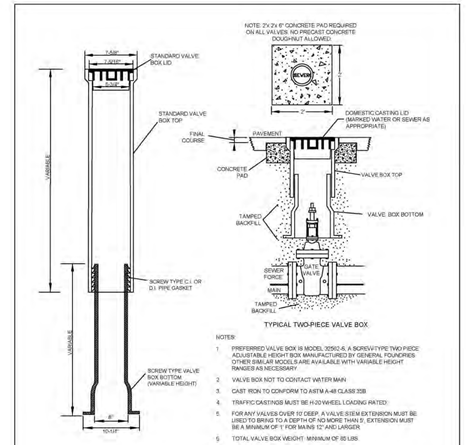

rev	description	app'd	date
		KPK	
		KPK	

Town of Hillsborough

PO Box 429
101 East Orange Street
Hillsborough, North Carolina 27278
919.732.1270

VALVE BOX ASSEMBLY AND GATE VALVE

scale | NTS drawing no. | **WS-01**
date | JUNE 2012
approved | Kenneth P. Keel, P.E., Town Engineer

McADAMS
The John R. McAdams Company, Inc.
2905 Meridian Parkway
Durham, NC 27713

phone 919. 361. 5000
fax 919. 361. 2269
license number: C-0293, C-187

www.mcadamsco.com

CLIENT

DR HORTON
2000 AERIAL DRIVE
MORRISVILLE, NC 27560
Contact
PHONE: 919. 460. 2943

D·R·HORTON America's Builder

COLLINS RIDGE - PHASE 2
SPECIAL USE PERMIT
258 ORANGE GROVE STREET
HILLSBOROUGH, NC

NORTH CAROLINA PROFESSIONAL SEAL 21543 ENGINEER BRADLEY A. RHINEHART
NOT FOR CONSTRUCTION

REVISIONS

NO.	DATE	
1	02. 24. 2023	REVISED PER TOWN COMMENTS
2	06. 02. 2023	REVISED PER TOWN COMMENTS
3	08. 04. 2023	REVISED PER TOWN COMMENTS
4	10. 19. 2023	REVISED PER TOWN COMMENTS
5	11. 03. 2023	REVISED PER TOWN COMMENTS
6	12. 04. 2023	REVISED PER TOWN COMMENTS

PLAN INFORMATION

PROJECT NO.	DRH-21002
FILENAME	DRH21002-D1
CHECKED BY	DLP
DRAWN BY	SJB
SCALE	NTS
DATE	10. 17. 2022

SHEET

SANITARY SEWER DETAILS

C8.02

ALL CONSTRUCTION SHALL BE IN ACCORDANCE WITH THE CURRENT TOWN OF HILLSBOROUGH AND NCDOT STANDARDS, SPECIFICATIONS, AND DETAILS.

PRELIMINARY DRAWING - NOT RELEASED FOR CONSTRUCTION

M:\Projects\DRH\DRH21002\04-Production\Engineering\Production Drawings\SUP 2\Current Drawings\Special Use Permit Drawings\DRH21002-D1.dwg, 12/7/2023 1:33:33 PM, Dwayne Peterson

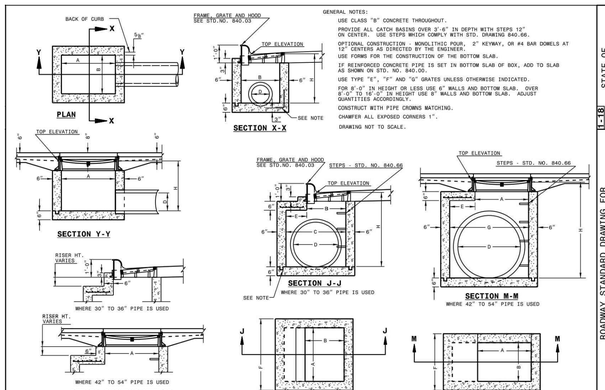

GENERAL NOTES:
USE CLASS "B" CONCRETE THROUGHOUT.
PROVIDE ALL CATCH BASINS OVER 3'-6" IN DEPTH WITH STEPS 12" ON CENTER. USE STEPS WHICH COMPLY WITH STD. DRAWING 840.66.
OPTIONAL CONSTRUCTION - MONOLITHIC POUR. 2" KEYWAY, OR #4 BAR DOWELS AT 12" CENTERS AS DIRECTED BY THE ENGINEER.
USE FORMS FOR THE CONSTRUCTION OF THE BOTTOM SLAB.
IF REINFORCED CONCRETE PIPE IS SET IN BOTTOM SLAB OF BOX, ADD TO SLAB AS SHOWN ON STD. NO. 840.00.
USE TYPE "E", "F" AND "G" GRATES UNLESS OTHERWISE INDICATED.
FOR 6'-0" IN HEIGHT OR LESS USE 6" WALLS AND BOTTOM SLAB. OVER 6'-0" TO 12'-0" IN HEIGHT USE 8" WALLS AND BOTTOM SLAB. ADJUST QUANTITIES ACCORDINGLY.
CONSTRUCT WITH PIPE CROWNS MATCHING.
CHAMFER ALL EXPOSED CORNERS 1".
DRAWING NOT TO SCALE.

STATE OF NORTH CAROLINA DEPT. OF TRANSPORTATION DIVISION OF HIGHWAYS RALEIGH, N.C.

I-18

ROADWAY STANDARD DRAWING FOR
CONCRETE CATCH BASIN
12" THRU 54" PIPE

SHEET 1 OF 2
840.02

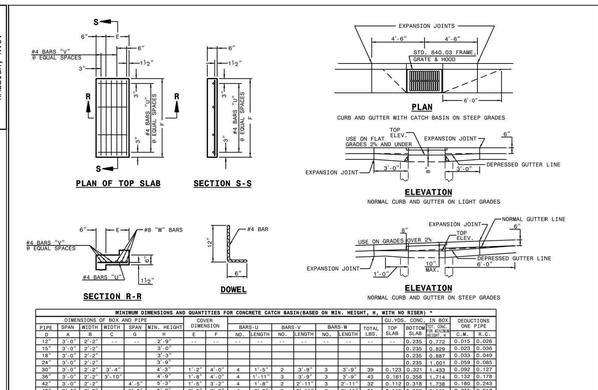

MINIMUM DIMENSIONS AND QUANTITIES FOR CONCRETE CATCH BASIN(BASED ON MIN. HEIGHT, H, WITH NO RISER) *																	
DIMENSIONS OF BOX AND PIPE						COVER DIMENSION	BARS-L			BARS-W			TOTAL BARS	CU.YDS. CONC IN BOX		DEDUCTIONS ONE PIPE	
PIPE	SPAN	WIDTH	WIDTH	SPAN	MIN. HEIGHT		NO.	LENGTH	NO.	LENGTH	NO.	LENGTH		TOP SLAB	BOTTOM SLAB	ST. CONC. BOTTOM SLAB	C.M.	R.C.
D	A	B	B	G	H	E											
12"	3'-0"	2'-2"	--	--	3'-9"	--	--	--	--	--	--	--	--	--	0.235	0.772	0.015	0.026
15"	3'-0"	2'-2"			3'-9"										0.235	0.829	0.020	0.036
18"	3'-0"	2'-2"			3'-9"										0.235	0.887	0.030	0.049
24"	3'-0"	2'-2"			3'-9"										0.235	1.001	0.050	0.085
30"	3'-0"	2'-2"	3'-4"		4'-3"	1'-2"	4'-0"	4	1'-5"	2	3'-9"	3	3'-9"	39	0.123	0.321	1.433	0.090	0.127
36"	3'-0"	2'-2"	3'-10"		4'-9"	1'-8"	4'-0"	4	1'-11"	3	3'-3"	3	3'-3"	43	0.161	0.368	1.714	0.132	0.178
42"	3'-0"	2'-2"		4'-5"	5'-3"	1'-5"	3'-2"	4	1'-8"	2	2'-11"	3	2'-11"	32	0.112	0.318	1.738	0.180	0.243
48"	3'-0"	2'-2"		5'-0"	5'-9"	2'-0"	3'-2"	4	2'-3"	3	2'-11"	3	2'-11"	35	0.145	0.352	2.052	0.235	0.317
54"	3'-0"	2'-2"		5'-7"	6'-3"	2'-7"	3'-2"	4	2'-10"	5	2'-11"	3	2'-11"	41	0.189	0.386	2.387	0.297	0.401

* RISER HAS .228 CUBIC YARDS OF CONCRETE PER FOOT HEIGHT

STATE OF NORTH CAROLINA DEPT. OF TRANSPORTATION DIVISION OF HIGHWAYS RALEIGH, N.C.

I-18

ROADWAY STANDARD DRAWING FOR
CONCRETE CATCH BASIN
12" THRU 54" PIPE

SHEET 2 OF 2
840.02

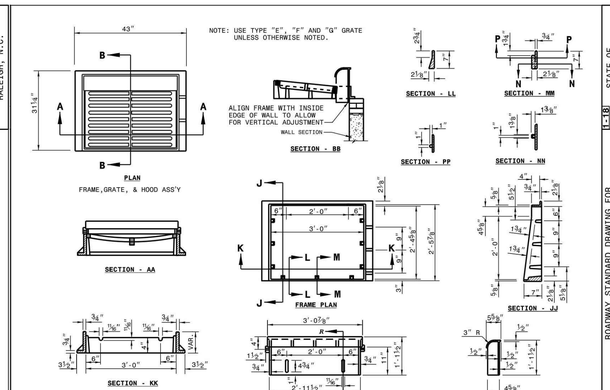

NOTE: USE TYPE "E", "F" AND "G" GRATE UNLESS OTHERWISE NOTED.

ALIGN FRAME WITH INSIDE EDGE OF WALL TO ALLOW FOR VERTICAL ADJUSTMENT

STATE OF NORTH CAROLINA DEPT. OF TRANSPORTATION DIVISION OF HIGHWAYS RALEIGH, N.C.

I-18

ROADWAY STANDARD DRAWING FOR
FRAME, GRATES AND HOOD
FOR USE ON STANDARD CATCH BASIN

SHEET 1 OF 2
840.03

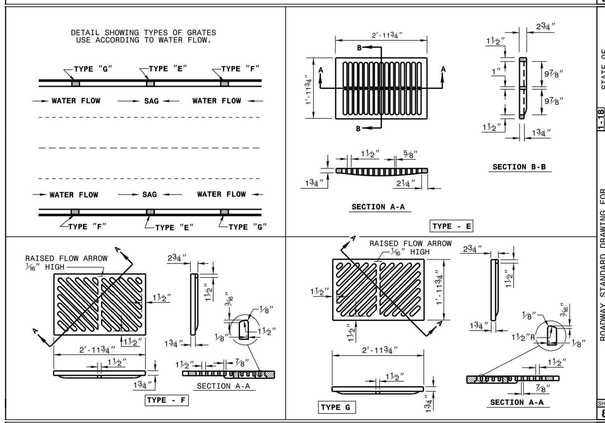

STATE OF NORTH CAROLINA DEPT. OF TRANSPORTATION DIVISION OF HIGHWAYS RALEIGH, N.C.

I-18

ROADWAY STANDARD DRAWING FOR
FRAME, GRATES, AND HOOD
FOR USE ON STANDARD CATCH BASIN

SHEET 2 OF 2
840.03

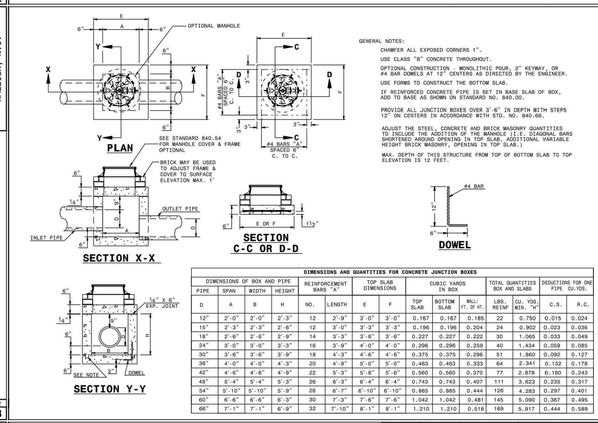

GENERAL NOTES:
CHAMFER ALL EXPOSED CORNERS 1".
USE CLASS "B" CONCRETE THROUGHOUT.
OPTIONAL CONSTRUCTION - MONOLITHIC POUR. 2" KEYWAY, OR #4 BAR DOWELS AT 12" CENTERS AS DIRECTED BY THE ENGINEER.
USE FORMS TO CONSTRUCT THE BOTTOM SLAB.
IF REINFORCED CONCRETE PIPE IS SET IN BASE SLAB OF BOX, ADD TO BASE AS SHOWN ON STANDARD NO. 840.00.
PROVIDE ALL JUNCTION BOXES OVER 3'-6" IN DEPTH WITH STEPS 12" ON CENTERS IN ACCORDANCE WITH STD. NO. 840.66.
ADJUST THE STEEL, CONCRETE AND BRICK MASONRY QUANTITIES TO INCLUDE THE ADDITION OF THE MANHOLE (I.E. DIAGONAL BARS SHORTENED AROUND OPENING IN TOP SLAB, ADDITIONAL VARIABLE HEIGHT BRICK MASONRY, OPENING IN TOP SLAB.)
MAX. DEPTH OF THIS STRUCTURE FROM TOP OF BOTTOM SLAB TO TOP ELEVATION IS 12 FEET.

DIMENSIONS AND QUANTITIES FOR CONCRETE JUNCTION BOXES																
DIMENSIONS OF BOX AND PIPE				REINFORCEMENT BARS "A"		TOP SLAB DIMENSIONS		CUBIC YARDS IN BOX		TOTAL QUANTITIES BOX AND SLABS		DEDUCTIONS FOR ONE PIPE CU.YDS.		
PIPE	SPAN	WIDTH	HEIGHT	NO.	LENGTH	E	F	TOP SLAB	BOTTOM SLAB	MILL. FT. OF WT.	LBS. REINF	CU. YDS. MIN. "H"	C.S.	R.C.
D	A	B	H											
12"	2'-0"	2'-0"	2'-3"	12	2'-9"	3'-0"	3'-0"	0.167	0.167	0.185	22	0.750	0.015	0.024
15"	2'-3"	2'-3"	2'-6"	12	3'-0"	3'-3"	3'-3"	0.196	0.196	0.204	24	0.902	0.023	0.036
18"	2'-6"	2'-6"	2'-9"	14	3'-3"	3'-6"	3'-6"	0.227	0.227	0.222	30	1.065	0.033	0.049
24"	3'-0"	3'-0"	3'-3"	16	3'-9"	4'-0"	4'-0"	0.296	0.296	0.259	40	1.434	0.059	0.085
30"	3'-6"	3'-6"	3'-9"	18	4'-3"	4'-6"	4'-6"	0.375	0.375	0.296	51	1.860	0.092	0.127
36"	4'-0"	4'-0"	4'-3"	20	4'-9"	5'-0"	5'-0"	0.463	0.463	0.333	64	2.341	0.132	0.178
42"	4'-6"	4'-6"	4'-9"	22	5'-3"	5'-6"	5'-6"	0.560	0.560	0.370	77	2.878	0.180	0.243
48"	5'-4"	5'-4"	5'-3"	26	6'-3"	6'-4"	6'-4"	0.743	0.743	0.407	111	3.623	0.235	0.317
54"	5'-10"	5'-10"	5'-9"	28	6'-7"	6'-10"	6'-10"	0.865	0.865	0.444	126	4.283	0.297	0.401
60"	6'-4"	6'-4"	6'-3"	30	7'-3"	7'-6"	7'-6"	1.042	1.042	0.481	145	5.090	0.367	0.495
66"	7'-1"	7'-1"	6'-9"	32	7'-10"	8'-1"	8'-1"	1.210	1.210	0.518	169	5.917	0.444	0.589

STATE OF NORTH CAROLINA DEPT. OF TRANSPORTATION DIVISION OF HIGHWAYS RALEIGH, N.C.

I-18

ROADWAY STANDARD DRAWING FOR
CONCRETE JUNCTION BOX
(WITH OPTIONAL MANHOLE)
12" THRU 66" PIPE

SHEET 1 OF 1
840.31

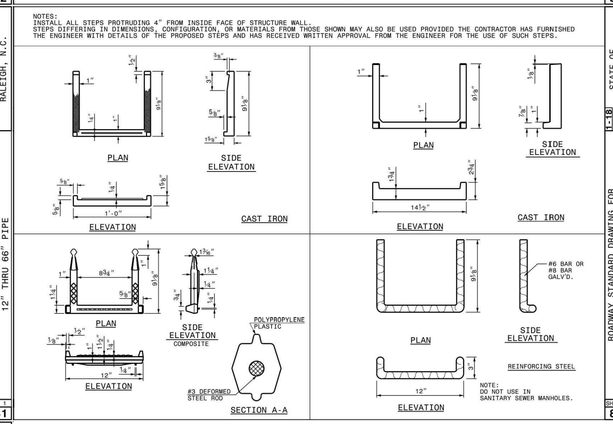

NOTES:
INSTALL ALL STEPS PROTRUDING 4" FROM INSIDE FACE OF STRUCTURE WALL.
STEPS DIFFERING IN DIMENSIONS, CONFIGURATION, OR MATERIALS FROM THOSE SHOWN MAY ALSO BE USED PROVIDED THE CONTRACTOR HAS FURNISHED THE ENGINEER WITH DETAILS OF THE PROPOSED STEPS AND HAS RECEIVED WRITTEN APPROVAL FROM THE ENGINEER FOR THE USE OF SUCH STEPS.

#3 DEFORMED STEEL ROD

#6 BAR OR #8 BAR GALV'D.

NOTE:
DO NOT USE IN SANITARY SEWER MANHOLES.

STATE OF NORTH CAROLINA DEPT. OF TRANSPORTATION DIVISION OF HIGHWAYS RALEIGH, N.C.

I-18

ROADWAY STANDARD DRAWING FOR
DRAINAGE STRUCTURE STEPS

SHEET 1 OF 1
840.66

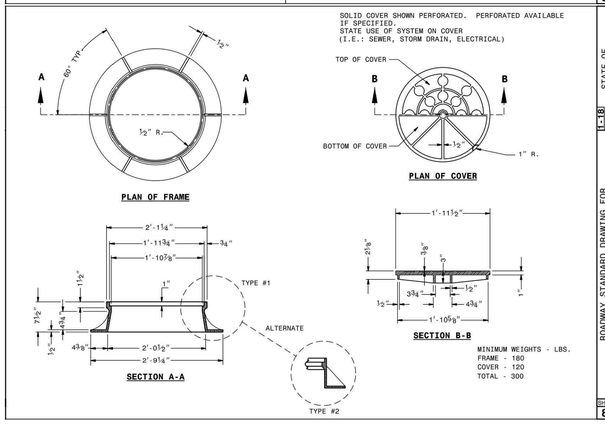

SOLID COVER SHOWN PERFORATED. PERFORATED AVAILABLE IF SPECIFIED.
STATE USE OF SYSTEM ON COVER
(I.E.: SEWER, STORM DRAIN, ELECTRICAL)

TOP OF COVER
BOTTOM OF COVER

MINIMUM WEIGHTS - LBS.
FRAME - 180
COVER - 120
TOTAL - 300

STATE OF NORTH CAROLINA DEPT. OF TRANSPORTATION DIVISION OF HIGHWAYS RALEIGH, N.C.

I-18

ROADWAY STANDARD DRAWING FOR
MANHOLE FRAME AND COVER

SHEET 1 OF 1
840.54

GENERAL NOTES
USE 4000 PSI MINIMUM COMPRESSIVE STRENGTH CONCRETE.
USE ASTM A615 GRADE 60 REINFORCING STEEL. USE ASTM A1064 WELDED WIRE FABRIC (WWF).
FABRICATE, ASSEMBLE AND DESIGN PRECAST MANHOLE COMPONENTS ACCORDANCE WITH AASHTO M199.
ASSEMBLE RISER AND GRADE RINGS WITH THE STEPS SPACED 12" FROM THE TOP TO THE BOTTOM OF THE MANHOLE.
WHERE THE MANHOLE IS EXPOSED TO ROAD TRAFFIC, CONSTRUCT THE TOP OF THE MANHOLE FLUSH WITH THE GROUND AND A MINIMUM OF 9" ABOVE THE GROUND AT OTHER LOCATIONS.
LIMIT DEPTH OF FILL TO 30'-0" FROM FINISH GRADE TO TOP OF BOTTOM SLAB.
THE MIN. SLAB THICKNESS 'T' IS THE DIMENSION OF THE THINNEST PORTION OF THE TOP/BOTTOM SLAB.
* TOP MAT OF REINFORCEMENT MAY BE NEGLECTED IF TOP SLAB HAS A DISTINGUISHABLE TOP AND BOTTOM.

D	W	T	As
INTERNAL DIAMETER (FT.)	MIN. WALL THICKNESS (IN.)	MIN. TOP/BOTTOM SLAB THICKNESS (IN.)	MIN. CIRCUMFERENTIAL AREA OF STEEL PER VERTICAL FT. (SQ. IN.)
4	4	6	0.12
5	5	8	0.15
6	6	8	0.18

FRAME AND GRATES	STD. NO.
TRAFFIC BEARING	840.27
NONTRAFFIC BEARING	840.22
	840.24
	840.26
	840.28
	840.29

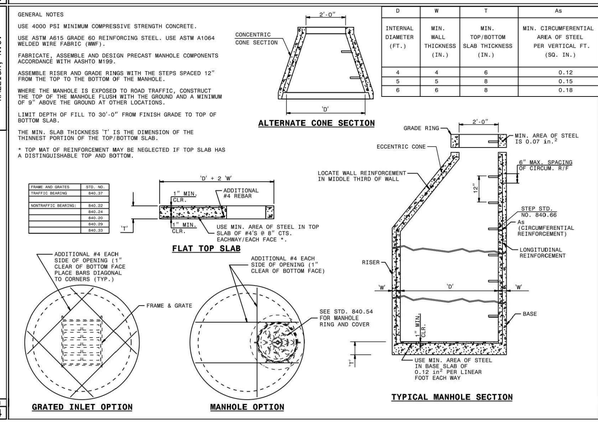

STATE OF NORTH CAROLINA DEPT. OF TRANSPORTATION DIVISION OF HIGHWAYS RALEIGH, N.C.

I-18

ROADWAY STANDARD DRAWING FOR
PRECAST MANHOLE 4', 5' AND 6' DIAMETER
12" THRU 48" PIPE

SHEET 1 OF 1
840.52

ALL CONSTRUCTION SHALL BE IN ACCORDANCE WITH THE CURRENT TOWN OF HILLSBOROUGH AND NCDOT STANDARDS, SPECIFICATIONS, AND DETAILS.

PRELIMINARY DRAWING - NOT RELEASED FOR CONSTRUCTION

MCADAMS
The John R. McAdams Company, Inc.
2905 Meridian Parkway
Durham, NC 27713

phone 919. 361. 5000
fax 919. 361. 2269
license number: C-0293, C-187

www.mcadamsco.com

CLIENT

DR HORTON
2000 AERIAL DRIVE
MORRISVILLE, NC 27560
Contact
PHONE: 919. 460. 2943

D·R·HORTON
America's Builder

COLLINS RIDGE - PHASE 2
SPECIAL USE PERMIT
258 ORANGE GROVE STREET
HILLSBOROUGH, NC

NORTH CAROLINA PROFESSIONAL SEAL 21543 ENGINEER BRADLEY A. RHINEHALT
NOT FOR CONSTRUCTION

REVISIONS

NO.	DATE	
1	02. 24. 2023	REVISED PER TOWN COMMENTS
2	06. 02. 2023	REVISED PER TOWN COMMENTS
3	08. 04. 2023	REVISED PER TOWN COMMENTS
4	10. 19. 2023	REVISED PER TOWN COMMENTS
5	11. 03. 2023	REVISED PER TOWN COMMENTS
6	12. 04. 2023	REVISED PER TOWN COMMENTS

PLAN INFORMATION

PROJECT NO.	DRH-21002
FILENAME	DRH21002-D1
CHECKED BY	DLP
DRAWN BY	SJB
SCALE	NTS
DATE	10. 17. 2022

SHEET

STORM DRAINAGE DETAILS

C8.03

M:\Projects\DRH\DRH21002\04-Production\Engineering\Production Drawings\SUP 2\Current Drawings\Special Use Permit Drawings\DRH21002-D1.dwg, 12/1/2023 1:33:35 PM, Dwayne Peterson

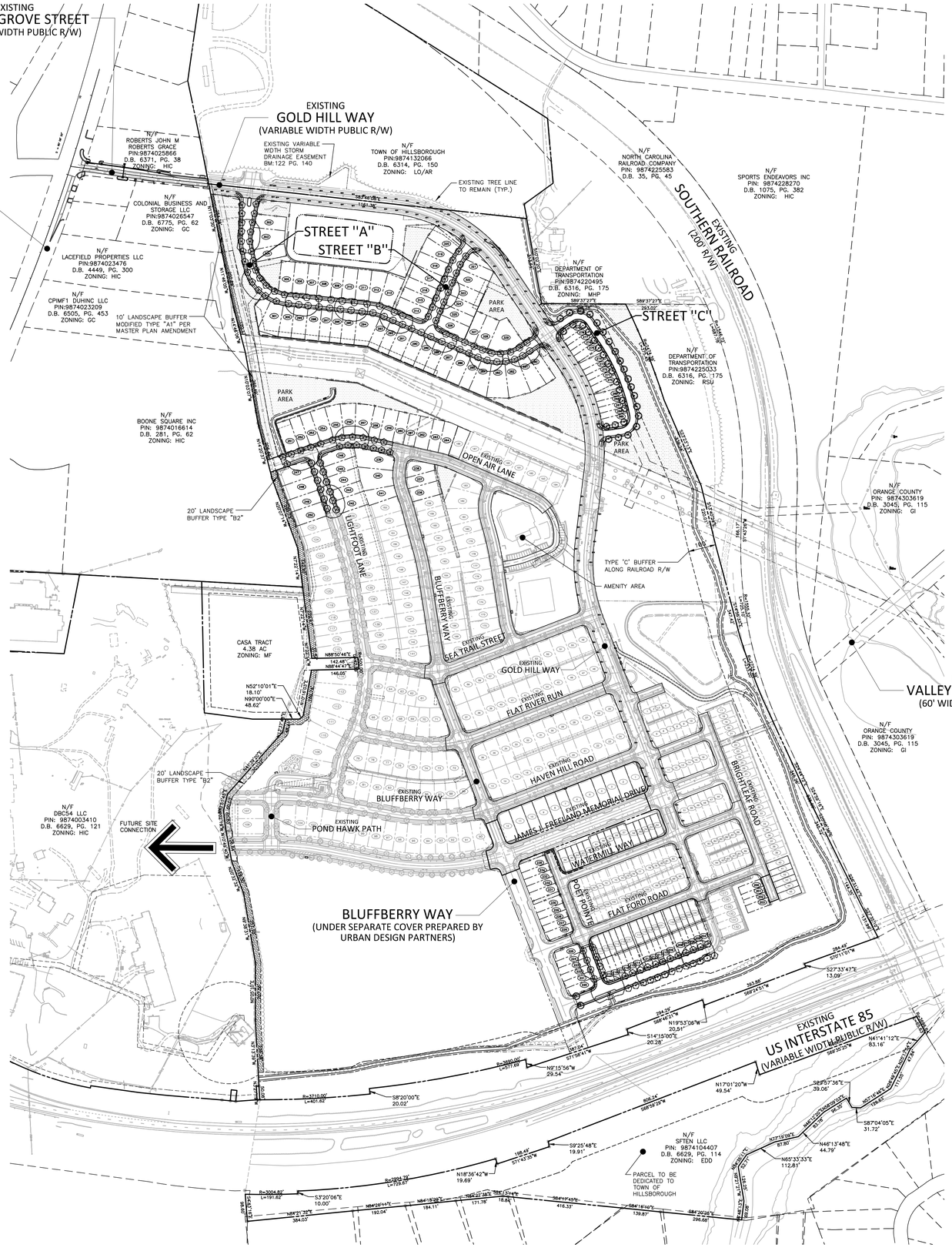

KEY MAP

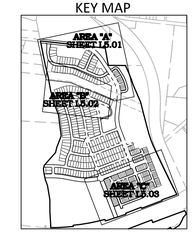

SITE LEGEND

- SIGNAGE
- YARD LIGHTS
- LIGHT POLE
- POWER POLE
- TRAFFIC DIRECTIONAL ARROW
- ACC / VAN — ACCESSIBLE PARKING STALL / VAN ACCESSIBLE PARKING STALL
- TYPE A, TYPE B, TYPE C — ACCESSIBLE RAMPS
- PHASE LINE
- PROPERTY LINE
- RIGHT-OF-WAY LINE
- LOT LINE
- EASEMENT LINE
- OPEN SPACE
- 10' BUFFER – MODIFIED TYPE "A1"
- 20' BUFFER – TYPE "B2"

TREE LEGEND

- E — ELM
- O — OAK
- DIAMETER INCH AT BREAST HEIGHT
- TYPE OF TREE

OVERALL PLANT SCHEDULE

CANOPY TREES	CODE	QTY	COMMON NAME	BOTANICAL NAME	CAL	REMARKS
	QAW	22	White Oak	Quercus alba	2.5"	60'-100' Mature HT.
	QCS	24	Scarlet Oak	Quercus coccinea	2.5"	60'-80' Mature HT.
	QPW	14	Willow Oak	Quercus phellos	2.5"	90' Mature HT.
	UAP	24	American Elm	Ulmus americana `Princeton`	2.5"	75'-125' Mature HT.
	UPC	35	Chinese Elm	Ulmus parvifolia	2.5"	40'-50' Mature HT.
	ZSV	68	Sawleaf Zelkova	Zelkova serrata `Village Green`	2.5"	40'-60' Mature HT.

GRAPHIC SCALE
0 100 200 400
1 inch = 200 ft.

SEE SHEET C0.01 FOR ALL PROJECT, SITE, GRADING, STORM DRAINAGE AND UTILITY NOTES

ALL CONSTRUCTION SHALL BE IN ACCORDANCE WITH THE CURRENT TOWN OF HILLSBOROUGH AND NCDOT STANDARDS, SPECIFICATIONS, AND DETAILS.

PRELIMINARY DRAWING - NOT RELEASED FOR CONSTRUCTION

MCADAMS
The John R. McAdams Company, Inc.
2905 Meridian Parkway
Durham, NC 27713

phone 919. 361. 5000
fax 919. 361. 2269
license number: C-0293, C-187

www.mcadamsco.com

CLIENT

DR HORTON
2000 AERIAL DRIVE
MORRISVILLE, NC 27560
Contact
PHONE: 919. 460. 2943

D·R·HORTON America's Builder

COLLINS RIDGE - PHASE 2
SPECIAL USE PERMIT
258 ORANGE GROVE STREET
HILLSBOROUGH, NC

NORTH CAROLINA PROFESSIONAL SEAL LANDSCAPE ARCHITECTURE 2027 FRANK MILLER NOT FOR CONSTRUCTION SAMPA RUNGE DONOHOE

REVISIONS

NO.	DATE	
1	02. 24. 2023	REVISED PER TOWN COMMENTS
2	06. 02. 2023	REVISED PER TOWN COMMENTS
3	08. 04. 2023	REVISED PER TOWN COMMENTS
4	10. 19. 2023	REVISED PER TOWN COMMENTS
5	11. 03. 2023	REVISED PER TOWN COMMENTS
6		

PLAN INFORMATION

PROJECT NO.	DRH-21002
FILENAME	DRH21002-OALS1
CHECKED BY	SRD
DRAWN BY	CMXY
SCALE	1" = 200'
DATE	10.17.2022

SHEET

OVERALL LANDSCAPE PLAN

L5.00

M:\Projects\DRH\DRH21002\04-Production\Engineering\Production Drawings\SUP 2\Current Drawings\Special Use Permit Drawings\DRH21002-OALS1.dwg, 11/29/2023 11:40:56 AM, Anders Lindquist

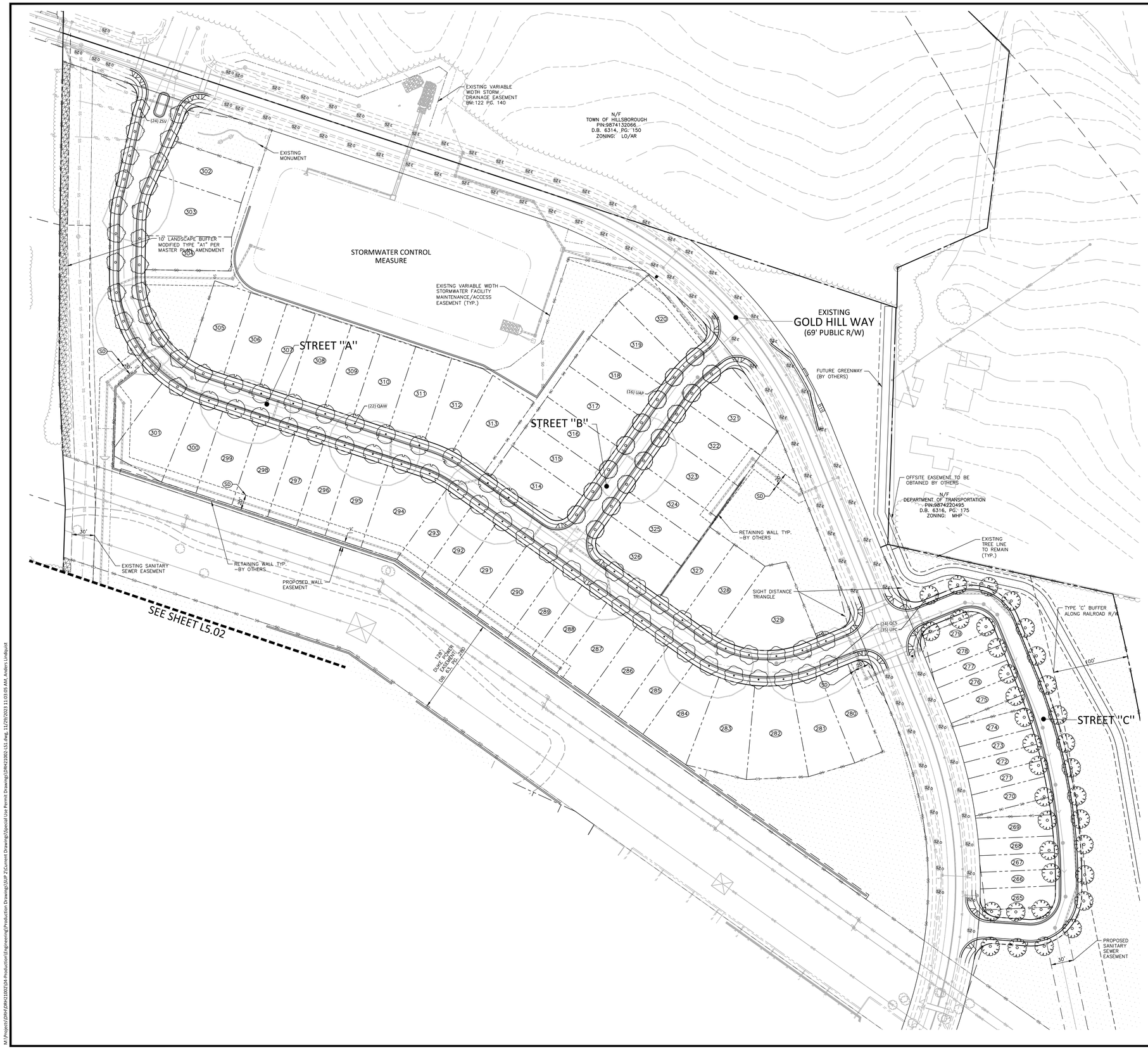

KEY MAP

SITE LEGEND

- SIGNAGE
- YARD LIGHTS
- LIGHT POLE
- POWER POLE
- TRAFFIC DIRECTIONAL ARROW
- ACC — ACCESSIBLE PARKING STALL
- VAN — VAN ACCESSIBLE PARKING STALL
- TYPE A, TYPE B, TYPE C — ACCESSIBLE RAMPS
- ACCESSIBLE ROUTE
- PHASE LINE
- PROPERTY LINE
- RIGHT-OF-WAY LINE
- LOT LINE
- EASEMENT LINE
- OPEN SPACE
- 20' BUFFER
- 20' BUFFER

TREE LEGEND

- E — ELM
- O — OAK
- DIAMETER INCH AT BREAST HEIGHT
- T-O — TYPE OF TREE

EASEMENT LEGEND

- SD — PROPOSED STORM DRAINAGE EASEMENT

PLANT SCHEDULE AREA "A"

CANOPY TREES	CODE	COMMON NAME	BOTANICAL NAME
	QAW	White Oak	Quercus alba
	QCS	Scarlet Oak	Quercus coccinea
	UAP	American Elm	Ulmus americana `Princeton`
	UPC	Chinese Elm	Ulmus parvifolia
	ZSV	Sawleaf Zelkova	Zelkova serrata `Village Green`

GRAPHIC SCALE
0 30 60 120
1 inch = 60 ft.

SEE SHEET C0.01 FOR ALL PROJECT, SITE, GRADING, STORM DRAINAGE AND UTILITY NOTES

ALL CONSTRUCTION SHALL BE IN ACCORDANCE WITH THE CURRENT TOWN OF HILLSBOROUGH AND NCDOT STANDARDS, SPECIFICATIONS, AND DETAILS.

PRELIMINARY DRAWING - NOT RELEASED FOR CONSTRUCTION

MCADAMS
The John R. McAdams Company, Inc.
2905 Meridian Parkway
Durham, NC 27713

phone 919. 361. 5000
fax 919. 361. 2269
license number: C-0293, C-187

www.mcadamsco.com

CLIENT

DR HORTON
2000 AERIAL DRIVE
MORRISVILLE, NC 27560
Contact
PHONE: 919. 460. 2943

D·R·HORTON America's Builder

COLLINS RIDGE - PHASE 2
SPECIAL USE PERMIT
258 ORANGE GROVE STREET
HILLSBOROUGH, NC

NORTH CAROLINA PROFESSIONAL LANDSCAPE ARCHITECT SARA RUNGE DONOVAN 2027 NOT FOR CONSTRUCTION

REVISIONS

NO.	DATE	
1	02. 24. 2023	REVISED PER TOWN COMMENTS
2	06. 02. 2023	REVISED PER TOWN COMMENTS
3	08. 04. 2023	REVISED PER TOWN COMMENTS
4	10. 19. 2023	REVISED PER TOWN COMMENTS
5	11. 03. 2023	REVISED PER TOWN COMMENTS
6		

PLAN INFORMATION

PROJECT NO.	DRH-21002
FILENAME	DRH21002-LS1
CHECKED BY	SRD
DRAWN BY	CMXY
SCALE	1" = 60'
DATE	10.17.2022

SHEET

LANDSCAPE PLAN
AREA "A"

L5.01

M:\Projects\DRH\DRH21002\04-Production\Engineering\Production Drawings\SUP 2\Current Drawings\Special Use Permit Drawings\DRH21002-LS1.dwg, 11/29/2023 11:03:05 AM, Anders Lindquist

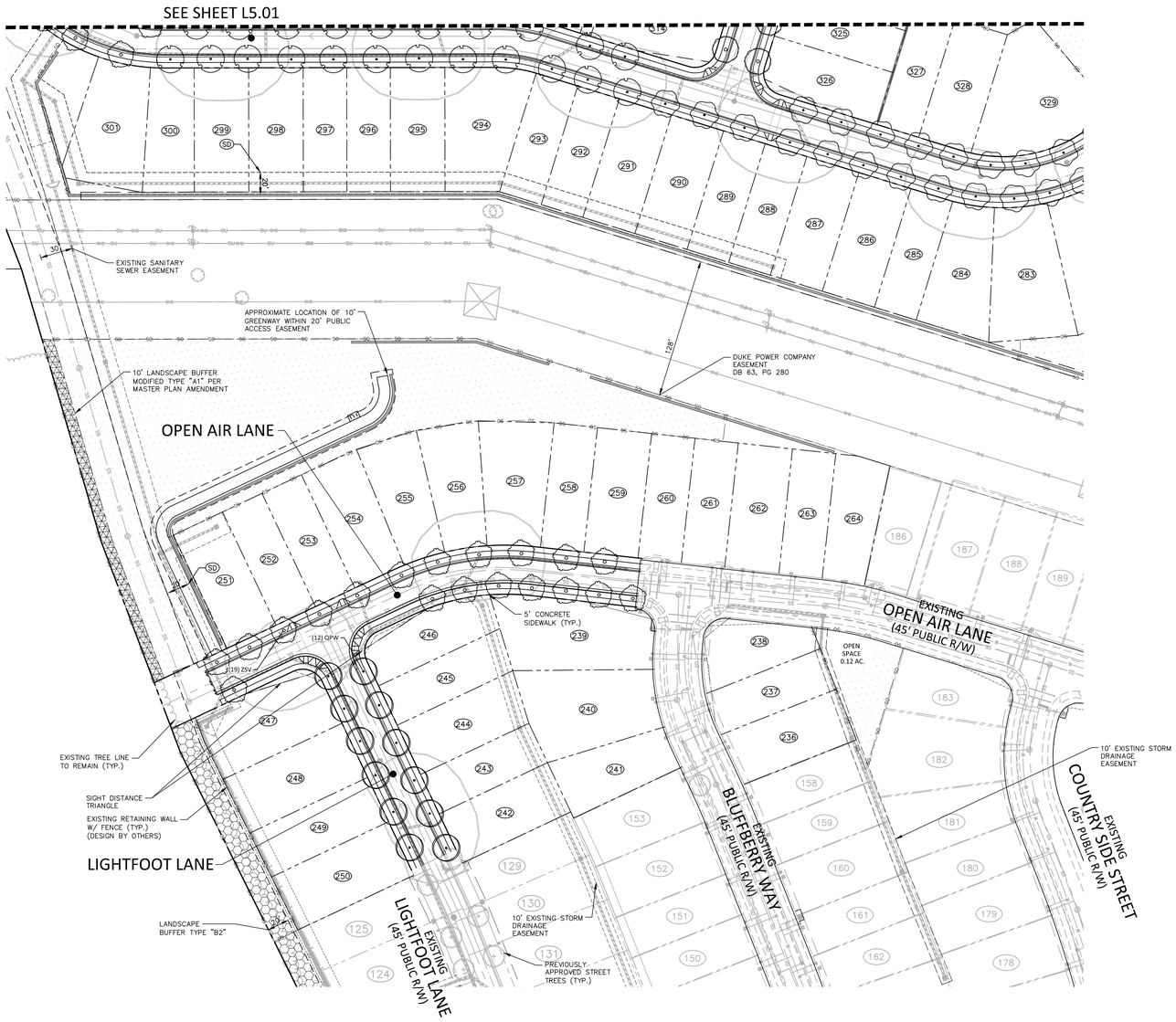

KEY MAP

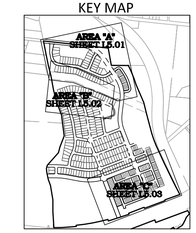

SITE LEGEND

- SIGNAGE
- YARD LIGHTS
- LIGHT POLE
- POWER POLE
- TRAFFIC DIRECTIONAL ARROW
- ACC — ACCESSIBLE PARKING STALL
- VAN — VAN ACCESSIBLE PARKING STALL
- TYPE A, TYPE B, TYPE C — ACCESSIBLE RAMPS
- ACCESSIBLE ROUTE
- PHASE LINE
- PROPERTY LINE
- RIGHT-OF-WAY LINE
- LOT LINE
- EASEMENT LINE
- OPEN SPACE
- 20' BUFFER
- 20' BUFFER

TREE LEGEND

- E — ELM
- O — OAK
- DIAMETER INCH AT BREAST HEIGHT
- TYPE OF TREE

EASEMENT LEGEND

- SD — PROPOSED STORM DRAINAGE EASEMENT

PLANT SCHEDULE AREA "B"

CANOPY TREES	CODE	COMMON NAME	BOTANICAL NAME
	QAW	White Oak	Quercus alba
	QCS	Scarlet Oak	Quercus coccinea
	QPW	Willow Oak	Quercus phellos
	UAP	American Elm	Ulmus americana `Princeton`
	ZSV	Sawleaf Zelkova	Zelkova serrata `Village Green`

GRAPHIC SCALE

0 30 60 120

1 inch = 60 ft.

SEE SHEET C0.01 FOR ALL PROJECT, SITE, GRADING, STORM DRAINAGE AND UTILITY NOTES

ALL CONSTRUCTION SHALL BE IN ACCORDANCE WITH THE CURRENT TOWN OF HILLSBOROUGH AND NCDOT STANDARDS, SPECIFICATIONS, AND DETAILS.

PRELIMINARY DRAWING - NOT RELEASED FOR CONSTRUCTION

MCADAMS

The John R. McAdams Company, Inc.
2905 Meridian Parkway
Durham, NC 27713

phone 919. 361. 5000
fax 919. 361. 2269
license number: C-0293, C-187

www.mcadamsco.com

CLIENT

DR HORTON
2000 AERIAL DRIVE
MORRISVILLE, NC 27560
Contact
PHONE: 919. 460. 2943

D·R·HORTON America's Builder

COLLINS RIDGE - PHASE 2
SPECIAL USE PERMIT
258 ORANGE GROVE STREET
HILLSBOROUGH, NC

NORTH CAROLINA PROFESSIONAL LANDSCAPE ARCHITECT SARA RUNGE DONOHUE 2027 NOT FOR CONSTRUCTION

REVISIONS

NO.	DATE	
1	02. 24. 2023	REVISED PER TOWN COMMENTS
2	06. 02. 2023	REVISED PER TOWN COMMENTS
3	08. 04. 2023	REVISED PER TOWN COMMENTS
4	10. 19. 2023	REVISED PER TOWN COMMENTS
5	11. 03. 2023	REVISED PER TOWN COMMENTS
6		

PLAN INFORMATION

PROJECT NO.	DRH-21002
FILENAME	DRH21002-LS1
CHECKED BY	SRD
DRAWN BY	CMXY
SCALE	1" = 60'
DATE	10.17.2022

SHEET

LANDSCAPE PLAN
AREA "B"

L5.02

M:\Projects\DRH\DRH21002\04-Production\Engineering\Production Drawings\SUP 2\Current Drawings\Special Use Permit Drawings\DRH21002-LS1.dwg, 11/29/2023 11:20:50 AM, Anders Lindquist

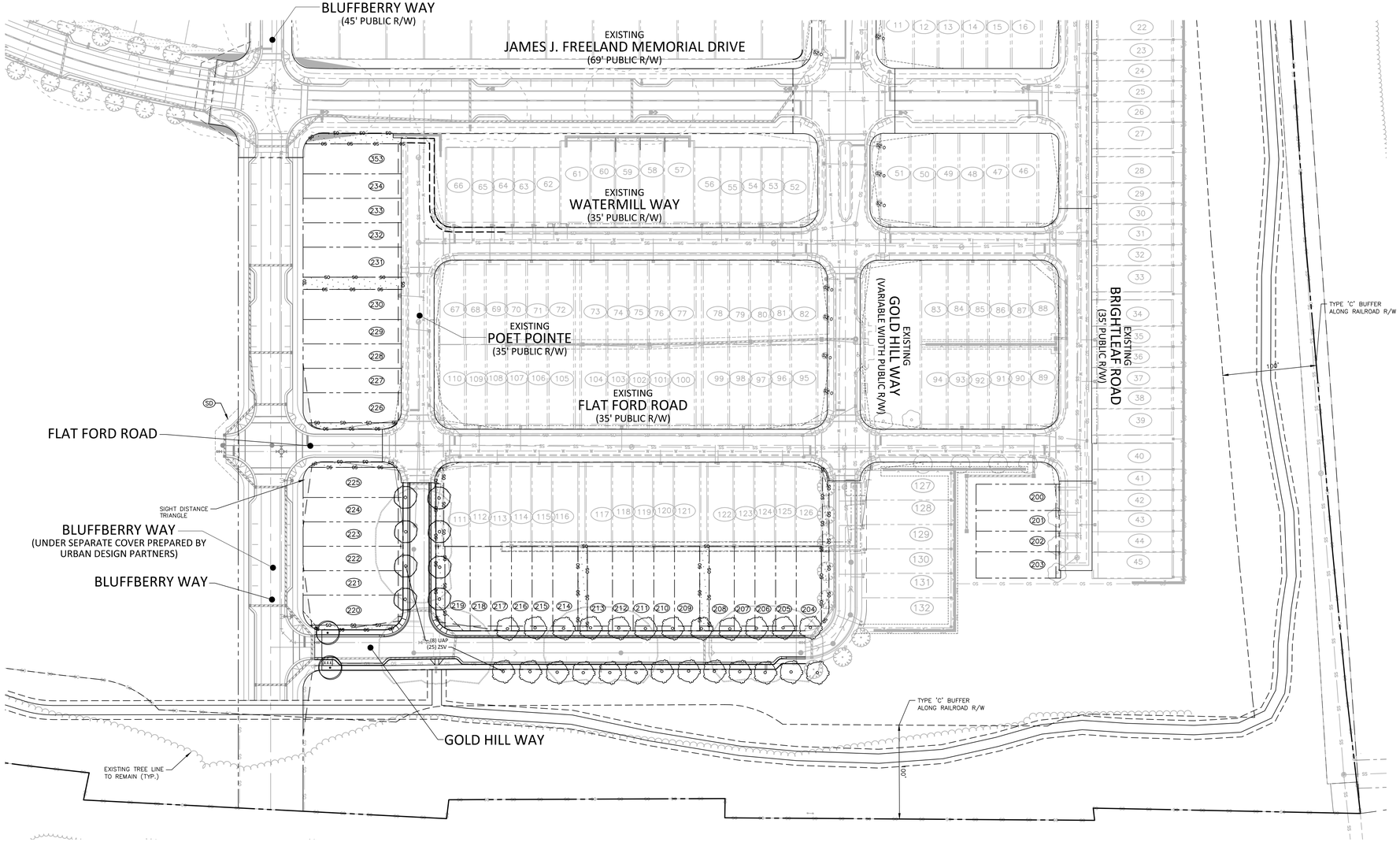

KEY MAP

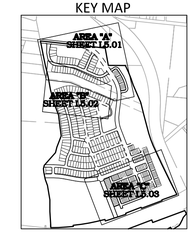

SITE LEGEND

- SIGNAGE
- YARD LIGHTS
- LIGHT POLE
- POWER POLE
- TRAFFIC DIRECTIONAL ARROW
- ACC / VAN — ACCESSIBLE PARKING STALL
- VAN ACCESSIBLE PARKING STALL
- TYPE A, TYPE B, TYPE C — ACCESSIBLE RAMPS
- ACCESSIBLE ROUTE
- PHASE LINE
- PROPERTY LINE
- RIGHT-OF-WAY LINE
- LOT LINE
- EASEMENT LINE
- OPEN SPACE

EASEMENT LEGEND

SD — PROPOSED STORM DRAINAGE EASEMENT

PLANT SCHEDULE AREA "C"

CANOPY TREES	CODE	COMMON NAME	BOTANICAL NAME
	QAW	White Oak	Quercus alba
	QPW	Willow Oak	Quercus phellos
	UAP	American Elm	Ulmus americana `Princeton`
	UPC	Chinese Elm	Ulmus parvifolia
	ZSV	Sawleaf Zelkova	Zelkova serrata `Village Green`

GRAPHIC SCALE
0 30 60 120
1 inch = 60 ft.

SEE SHEET C0.01 FOR ALL PROJECT, SITE, GRADING, STORM DRAINAGE AND UTILITY NOTES

ALL CONSTRUCTION SHALL BE IN ACCORDANCE WITH THE CURRENT TOWN OF HILLSBOROUGH AND NCDOT STANDARDS, SPECIFICATIONS, AND DETAILS.

PRELIMINARY DRAWING - NOT RELEASED FOR CONSTRUCTION

McADAMS
The John R. McAdams Company, Inc.
2905 Meridian Parkway
Durham, NC 27713

phone 919. 361. 5000
fax 919. 361. 2269
license number: C-0293, C-187

www.mcadamsco.com

CLIENT

DR HORTON
2000 AERIAL DRIVE
MORRISVILLE, NC 27560
Contact
PHONE: 919. 460. 2943

D·R·HORTON America's Builder

COLLINS RIDGE - PHASE 2
SPECIAL USE PERMIT
258 ORANGE GROVE STREET
HILLSBOROUGH, NC

NORTH CAROLINA PROFESSIONAL SEAL LANDSCAPE ARCHITECT 2027 SARA RUNGE DONOVAN
PRELIMINARY NOT FOR CONSTRUCTION

REVISIONS

NO.	DATE	
1	02. 24. 2023	REVISED PER TOWN COMMENTS
2	06. 02. 2023	REVISED PER TOWN COMMENTS
3	08. 04. 2023	REVISED PER TOWN COMMENTS
4	10. 19. 2023	REVISED PER TOWN COMMENTS
5	11. 03. 2023	REVISED PER TOWN COMMENTS
6		

PLAN INFORMATION

PROJECT NO.	DRH-21002
FILENAME	DRH21002-LS1
CHECKED BY	SRD
DRAWN BY	CMXY
SCALE	1" = 60'
DATE	10.17.2022

SHEET

LANDSCAPE PLAN
AREA "C"

L5.03

M:\Projects\DRH\DRH21002\04-Production\Engineering\Production Drawings\SUP 2\Current Drawings\Special Use Permit Drawing\DRH21002-LS1.dwg, 11/29/2023 11:22:21 AM, Anders Lindquist

GENERAL LANDSCAPE NOTES:

1. ALL MATERIALS AND METHODS OF CONSTRUCTION SHALL BE IN ACCORDANCE WITH THE TOWN OF HILLSBOROUGH AND THE STATE OF NORTH CAROLINA STANDARDS AND SPECIFICATIONS.
2. CONTRACTOR IS RESPONSIBLE FOR THE SITE INSPECTION BEFORE LANDSCAPE CONSTRUCTION AND INSTALLATION IN ORDER TO BECOME FAMILIAR WITH THE EXISTING CONDITIONS.
3. LANDSCAPE CONTRACTOR IS RESPONSIBLE FOR LOCATING ALL UNDERGROUND UTILITIES BEFORE BEGINNING DEMOLITION OR INSTALLATION.
4. CONTRACTOR SHALL NOTIFY LANDSCAPE ARCHITECT OF ANY DISCREPANCIES BETWEEN THE NOTES, SPECIFICATIONS, DRAWINGS OR SITE CONDITIONS FOR RESOLUTION PRIOR TO INSTALLATION.
5. ANY DAMAGE TO UTILITIES SHALL BE REPAIRED AT THE CONTRACTOR'S EXPENSE.
6. THIS PLAN IS FOR PLANTING PURPOSES ONLY. FOR INFORMATION REGARDING BUILDINGS, GRADING, WALLS, ETC., REFER TO ARCHITECTURE, SITE AND GRADING PLANS.
7. VERIFICATION OF TOTAL PLANT QUANTITIES AS SHOWN IN THE PLANT SCHEDULE SHALL BE THE RESPONSIBILITY OF THE LANDSCAPE CONTRACTOR. ANY DISCREPANCIES SHALL BE BROUGHT TO THE ATTENTION OF THE LANDSCAPE ARCHITECT.
8. CONTRACTOR TO ENSURE PROPER STABILIZATION AND SEEDING OF THE SITE IN ACCORDANCE WITH APPLICABLE REGULATIONS.
9. LANDSCAPE MATERIAL SHALL BE WELL FORMED, VIGOROUS, GROWING SPECIMENS WITH GROWTH TYPICAL OF VARIETIES SPECIFIED AND SHALL BE FREE FROM DAMAGE, INSECTS AND DISEASES. MATERIAL SHALL EQUAL OR SURPASS #1 QUALITY AS DEFINED IN THE CURRENT ISSUE OF "AMERICAN STANDARD FOR NURSERY STOCK" AS PUBLISHED BY THE AMERICAN NURSERY & LANDSCAPE ASSOCIATION.
10. ALL PLANT MATERIAL IS TO BE CAREFULLY HANDLED BY THE ROOT BALL, NOT THE TRUNK, BRANCHES AND/OR FOLIAGE OF THE PLANT. MISHANDLED PLANT MATERIAL MAY BE REJECTED BY THE LANDSCAPE ARCHITECT.
11. ALL PLANT MATERIAL IS TO BE WELL ROOTED, NOT ROOT BOUND, SUCH THAT THE ROOT BALL REMAINS INTACT THROUGHOUT THE PLANTING PROCESS. DEFICIENT PLANT MATERIAL MAY BE REJECTED BY THE LANDSCAPE ARCHITECT OR OWNER.
12. ALL PLANTS TO BE A MINIMUM OF WHAT IS SPECIFIED IN THE PLANT SCHEDULE. ANY CHANGES OR SUBSTITUTIONS SHALL BE APPROVED BY THE LANDSCAPE ARCHITECT AND GOVERNING JURISDICTION PRIOR TO ANY HOLE BEING DUG.
13. CONTRACTOR TO COORDINATE WITH OWNER'S REPRESENTATIVE AND LANDSCAPE ARCHITECT TO ESTABLISH THE EXTENTS OF MULCH/SEED/SOD IF NOT SPECIFICALLY SHOWN ON PLANS.
14. CONTRACTOR SHALL PROVIDE POSITIVE DRAINAGE IN ALL PLANTING AREAS.
15. PROPOSED TREES TO BE PLANTED A MINIMUM 10 FEET FROM ANY LIGHT POLE AS MEASURED FROM TRUNK OF THE TREE TO THE POLE.
16. PROPOSED TREES TO BE PLANTED A MINIMUM 5 FEET FROM ANY FIRE HYDRANT AS MEASURED FROM TRUNK OF THE TREE TO THE HYDRANT.
17. CONTRACTOR SHALL COMPLETE SOIL TEST IN ALL PLANTING AREAS TO DETERMINE SOIL AMENDMENT REQUIREMENTS UNLESS WAIVED BY OWNER'S REPRESENTATIVE. CONTRACTOR SHALL ADJUST PH AND FERTILITY BASED UPON THE SOIL TEST RESULTS.
18. TOPSOIL SHALL BE FREE OF MATERIAL LARGER THAN 1.0 INCH IN DIAMETER OR LENGTH AND SHALL NOT CONTAIN SLAG, CINDERS, STONES, LUMPS OF SOIL, STICKS, ROOTS, TRASH, OR OTHER EXTRANEOUS MATERIAL.
19. LOOSEN SUBGRADE / SURFACE SOIL TO A MINIMUM DEPTH OF 6 INCHES. APPLY SOIL AMENDMENTS AND FERTILIZERS AS REQUIRED BY THE SOIL TEST RESULTS TO ACHIEVE A HEALTHY GROWING MEDIA AND MIX THOROUGHLY INTO TOP 4 INCHES OF SOIL. SPREAD PLANTING SOIL MIX TO A DEPTH OF 6 INCHES BUT NOT LESS THAN REQUIRED TO MEET FINISH GRADES AFTER NATURAL SETTLEMENT. DO NOT SPREAD IF PLANTING SOIL OR SUBGRADE IS FROZEN, MUDDY, OR EXCESSIVELY WET.
20. IF IMPORTED TOPSOIL IS REQUIRED, THE SUBGRADE SHALL BE SCARIFIED OR TILLED TO A DEPTH OF AT LEAST 6 INCHES PRIOR TO INSTALLATION OF IMPORTED TOPSOIL. FOLLOWING INSTALLATION OF IMPORTED TOPSOIL, THE TOPSOIL SHALL BE TILLED TO INTEGRATE THE SOIL PROFILES.
21. PLANT MATERIALS ARE TO BE GUARANTEED FOR A PERIOD OF 12 MONTHS. PLANT MATERIALS WHICH REMAIN UNHEALTHY WILL BE REPLACED BY THE LANDSCAPE CONTRACTOR BEFORE THE EXPIRATION OF THE GUARANTEE PERIOD OR IMMEDIATELY IF SO DIRECTED BY THE OWNER'S REPRESENTATIVE OR LANDSCAPE ARCHITECT.
22. ALL TREE PLANTINGS SHALL BE MULCHED TO A DEPTH OF 3 INCHES, AND WITH A MINIMUM 3 FOOT RADIUS FROM BASE OF TREE OR TO DRIPLINE. MULCH SHALL BE FREE OF TRASH AND MAINTAINED WEED FREE. MULCH SHALL NOT COVER THE ROOT FLARE. CONFIRM MULCH SPECIFICATIONS WITH OWNER'S REPRESENTATIVE OR LANDSCAPE ARCHITECT.
23. DO NOT PRUNE TREES AND SHRUBS BEFORE DELIVERY. PROTECT BARK, BRANCHES, AND ROOT SYSTEMS FROM SUN SCALD, DRYING, SWEATING, WHIPPING, AND OTHER HANDLING AND TYING DAMAGE. DO NOT BEND OR BIND-TIE TREES OR SHRUBS IN SUCH A MANNER AS TO DESTROY THEIR NATURAL SHAPE. PROVIDE PROTECTIVE COVERING OF EXTERIOR PLANTS DURING DELIVERY. DO NOT DROP EXTERIOR PLANTS DURING DELIVERY AND HANDLING.
24. DELIVER EXTERIOR PLANTS AFTER PREPARATIONS FOR PLANTING HAVE BEEN COMPLETED AND INSTALL IMMEDIATELY. IMMEDIATELY AFTER UNLOADING, STAND THE TREES UP TO REDUCE THE RISK OF SUN SCALD. PROPERLY STAGED TREES ARE STANDING, UNTIED AND SPACED. UNLESS IMMEDIATELY INSTALLED, SET EXTERIOR PLANTS AND TREES IN SHADE, PROTECT FROM WEATHER AND MECHANICAL DAMAGE, AND KEEP ROOTS MOIST.
25. SEE LANDSCAPE DETAILS FOR TREE STAKING REQUIREMENTS.
26. EXCAVATE EDGES OF ALL PLANTING BEDS TO 2 INCH DEPTH TO FORM A NEAT AND CRISP DEFINITION.
27. CONTRACTOR SHALL REMOVE DEBRIS AND FINE GRADE ALL PLANTING AREAS PRIOR TO INSTALLATION.
28. REMOVE GUY WIRES AND STAKES AT END OF WARRANTY PERIOD OR ESTABLISHMENT.
29. FINISH GRADING: GRADE PLANTING AREAS TO A SMOOTH, UNIFORM SURFACE PLANE WITH LOOSE, UNIFORMLY FINE TEXTURE. GRADE TO WITHIN PLUS OR MINUS 1/2 INCH OF FINISH ELEVATION. ROLL AND RAKE, REMOVE RIDGES, AND FILL DEPRESSIONS TO MEET FINISH GRADES. LIMIT FINISHED GRADING TO AREAS THAT CAN BE PLANTED IN THE IMMEDIATE FUTURE.

WARRANTY & MAINTENANCE:

1. WARRANTY: INSTALLER SHALL REPAIR OR REPLACE ANY PLANTINGS THAT FAIL IN MATERIALS, WORKMANSHIP, OR GROWTH WITHIN ONE YEAR AFTER THE DATE OF SUBSTANTIAL COMPLETION. FAILURES INCLUDE, BUT ARE NOT LIMITED TO, THE FOLLOWING:
   - DEATH AND UNSATISFACTORY GROWTH, EXCEPT FOR DEFECTS RESULTING FROM LACK OF ADEQUATE MAINTENANCE, NEGLECT, ABUSE BY OWNER, OR INCIDENTS THAT ARE BEYOND CONTRACTOR'S CONTROL.
   - STRUCTURAL FAILURES INCLUDING PLANTINGS FALLING OR BLOWING OVER.
2. MAINTENANCE: INITIAL MAINTENANCE SHALL BE PROVIDED IMMEDIATELY AFTER EACH AREA IS PLANTED AND CONTINUE UNTIL SUBSTANTIAL COMPLETION. UPON SUBSTANTIAL COMPLETION, MAINTENANCE FOR ALL PLANT MATERIAL SHALL BE PROVIDED FOR ONE YEAR AT A MINIMUM SHALL INCLUDE:
   - TREE AND SHRUB MAINTENANCE: MAINTAIN PLANTINGS BY PRUNING, CULTIVATING, WATERING, WEEDING, FERTILIZING, RESTORING PLANTING SAUCERS, AND RESETTING TO PROPER GRADES OR VERTICAL POSITION, AS REQUIRED TO ESTABLISH HEALTHY, VIABLE PLANTINGS. SPRAY OR TREAT AS REQUIRED TO KEEP TREES AND SHRUBS FREE OF INSECTS AND DISEASE.
   - GROUND COVER AND PLANT MAINTENANCE: MAINTAIN AND ESTABLISH PLANTINGS BY WATERING, WEEDING, FERTILIZING, MULCHING, AND OTHER OPERATIONS AS REQUIRED TO ESTABLISH HEALTHY, VIABLE PLANTINGS.
   - PROTECT EXTERIOR PLANTS FROM DAMAGE DUE TO LANDSCAPE OPERATIONS, OPERATIONS BY OTHER CONTRACTORS AND TRADES, AND OTHERS. MAINTAIN PROTECTION DURING INSTALLATION AND MAINTENANCE PERIODS. TREAT, REPAIR, OR REPLACE DAMAGED PLANTINGS.

OVERALL PLANT SCHEDULE

CANOPY TREES	CODE	QTY	COMMON NAME	BOTANICAL NAME	CAL	REMARKS
	QAW	22	White Oak	Quercus alba	2.5"	60'-100' Mature HT.
	QCS	24	Scarlet Oak	Quercus coccinea	2.5"	60'-80' Mature HT.
	QPW	14	Willow Oak	Quercus phellos	2.5"	90' Mature HT.
	UAP	24	American Elm	Ulmus americana `Princeton`	2.5"	75'-125' Mature HT.
	UPC	35	Chinese Elm	Ulmus parvifolia	2.5"	40'-50' Mature HT.
	ZSV	68	Sawleaf Zelkova	Zelkova serrata `Village Green`	2.5"	40'-60' Mature HT.

LANDSCAPE CALCULATIONS

STREET TREES

STREET A — 2,773 LF
TREES
REQUIRED: 70 (1/40 LF)
PROVIDED: 70

STREET B — 632 LF
TREES
REQUIRED: 16 (1/40 LF)
PROVIDED: 16

ALLEY C — 1,386 LF
TREES
REQUIRED: 35 (1/40 LF)
PROVIDED: 35

OPEN AIR LANE — 754 LF
TREES
REQUIRED: 19 (1/40 LF)
PROVIDED: 19

LIGHT FOOT LANE — 446 LF
TREES
REQUIRED: 12 (1/40 LF)
PROVIDED: 12

POET POINTE — 314 LF
TREES
REQUIRED: 8 (1/40 LF)
PROVIDED: 8

GOLD HILL WAY — 1,046 LF
TREES
REQUIRED: 27 (1/40 LF)
PROVIDED: 27

BUFFER CALCULATIONS:

WESTERN PROPERTY LINE - MODIFIED TYPE A1 10' BUFFER:

TOTAL LF:	845 LF
LARGE TREES REQUIRED:	9 (1/100 LF)
LARGE TREES PROVIDED:	9
SMALL TREES OR LARGE SHRUBS REQUIRED:	17 (2/100 LF)
SMALL TREES OR LARGE SHRUBS PROVIDED:	17
MID-SIZE OR SMALL SHRUBS REQUIRED:	127 (15/100 LF)
MID-SIZE OR SMALL SHRUBS PROVIDED:	127

WESTERN PROPERTY LINE - TYPE B2 20' BUFFER:

TOTAL LF:	216 LF
LARGE TREES REQUIRED	4 (2/100 LF)
LARGE TREES PROVIDED	4
SMALL TREES OR LARGE SHRUBS REQUIRED:	9 (4/100 LF)
SMALL TREES OR LARGE SHRUBS PROVIDED:	9

SIGHT DISTANCE NOTE:

1. ALL STREET TRESS WITHIN OR NEAR INTERSECTION SIGHT DISTANCE TRIANGLES SHALL BE LIMBED TO 8 FEET ABOVE FINISHED GRADE.
2. TREES MAY REQUIRE A LARGER CALIPER INSTALL SIZE IN ORDER TO BE LIMBED UP ACCORDING TO ANLA STANDARDS.

STREET TREE NOTES:

1. STREET TREES SHALL BE PROVIDED, WHERE POSSIBLE, ALONG ALL PUBLIC STREETS AND SHALL BE PLACED AT A MINIMUM OF 25 FEET ON CENTER AND A MAXIMUM OF 50 FEET ON CENTER.
2. STREET TREES SHALL BE 2.5-INCH CALIPER AT TIME OF PLANTING.

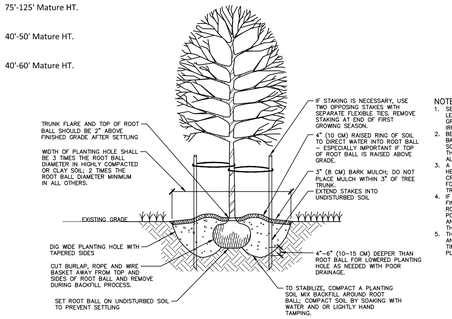

NOTES:
1. SELECT TREES THAT HAVE: STRONG CENTRAL LEADER; CROWN WITH FULL FOLIAGE; ARE GROWN IN HEAVY CLAY SOIL WITH DRIP IRRIGATION.
2. BEFORE INSTALLING PLANTING SOIL MIX BACKFILL, FILL PLANTING HOLE WITH WATER TO SOAK HOLE TO CONFIRM WATER FILTERS THROUGH UNDISTURBED SOIL. DESIGN ALTERNATIVE DRAINAGE SYSTEM IF REQUIRED.
3. A SOIL EXPERT CAN BE CONSULTED TO HELP MODIFY AND FERTILIZE TOPSOIL TO CREATE AN ACCEPTABLE PLANTING SOIL MIX FOR THE SITE CONDITIONS AND SPECIFIC TREE SPECIES.
4. FOR CONTAINER GROWN TREES, USE PRUNERS OR SMALL HAND TOOLS TO PULL ROOTS OUT OF THE OUTER LAYER OF POTTING SOIL; THEN CUT OR PULL APART ANY ROOTS CIRCLING THE PERIMETER OF THE CONTAINER.
5. THOROUGHLY SOAK THE TREE ROOT BALL AND ADJACENT PREPARED SOIL SEVERAL TIMES DURING THE FIRST MONTH AFTER PLANTING AND DURING DRY PERIODS.

01 TREE INSTALLATION
SCALE: 3/8"=1'-0"

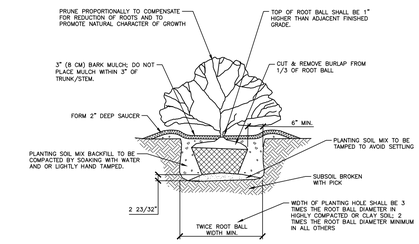

02 SHRUB INSTALLATION
SCALE: 3/8"=1'-0"

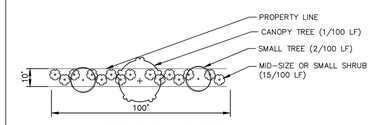

10' MODIFIED TYPE A1 BUFFER
NOT TO SCALE

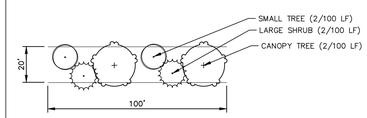

20' TYPE B2 BUFFER
NOT TO SCALE

APPROVED PLANT SPECIES

CANOPY TREES:	12' MIN. PLANTING HEIGHT
ACER SACCHARUM (SUGAR MAPLE)	80'–115' MATURE HT.
BETULA NIGRA (RIVER BIRCH)	40'–50' MATURE HT.
LIRODENDRON TULIPIFERA (TULIP TREE)	80'–150' MATURE HT.
MAGNOLIA GRANDIFLORA (SOUTH. MAGNOLIA)	40'–80' MATURE HT.
PINUS TAEDA (LOBLOLLY PINE)	70'–90' MATURE HT.
QUERCUS RUBRA (RED OAK)	70'–90' MATURE HT.
QUERCUS ALBA (WHITE OAK)	70'–90' MATURE HT.
SMALL TREE SPECIES:	**10' MIN. PLANTING HEIGHT**
CERCUS CANADENSIS (EASTERN REDBUD)	20'–30' MATURE HT.
AMALANCHER ARBOREA (SERVICEBERRY)	20'–25' MATURE HT.
ILEX DAHOON (DAHOON HOLLY)	20'–30' MATURE HT.
CORNUS FLORIDA (FLOWERING DOGWOOD)	25'–30' MATURE HT.
LAGERSTROMIA SPP. (CRAPE MYRTLE)	20'–25' MATURE HT.
WASHINGTON HAWTHORN (CRATAEGUS PHAENOPYRUM)	20'–25' MATURE HT.
LARGE SHRUB SPECIES:	**5' MIN. PLANTING HEIGHT**
FOTHERGILLA MAJOR (LARGE FOTHERGILLA)	10'–15' MATURE HT.
LOROPETALUM CHINENSE (CHINESE FRINGE)	6'–12' MATURE HT.
MYRICA PUSILLA (DWARF WAXMYRTLE)	8'–15' MATURE HT.
PRUNUS CAROLINIANA (CHERRY LAUREL)	8'–15' MATURE HT.
MYRICA CERIFERA (WAX MYRTLE)	12'–15' MATURE HT.
HAMAMELIS VIRGINIANA (WITCH HAZEL)	12'–15' MATURE HT.
MID-SIZE OR SMALL SHRUB SPECIES:	**2' MIN. PLANTING HEIGHT**
HYDRANGEA QUERCIFOLIA (OAKLEAF HYDRANGEA)	6'–8' MATURE HT.
ILEX GLABRA (INKBERRY HOLLY)	6'–10' MATURE HT.
ILEX VERTICILLATA	6'–12' MATURE HT.
LINDERA BENZOIN (SPICEBUSH)	6'–8' MATURE HT.
VIBURNUM TINUS (LAURUSTINUS)	6'–12' MATURE HT.

**EXISTING PLANT MATERIAL LOCATED IN THE BUFFER TO BE EVALUATED BY CERTIFIED ARBORIST FOR LOCATION, SIZE AND HEALTH. PROPOSED BUFFER PLANT MATERIAL TO BE SUPPLEMENTAL MATERIAL IN ADDITION TO EXISTING PLANTS. LOCATIONS OF PROPOSED PLANTING TO BE INSTALLED SO AS NOT TO DISTURB OR IMPACT THE HEALTH OF EXISTING PLANT MATERIAL.

PLANTING REQUIREMENT:

1. THESE PLANTING DIAGRAMS ARE TYPICAL OF A 100' LENGTH OF EACH TYPE OF BUFFER SHOWN. PATTERN SHALL BE REPEATED EVERY 100' FOR ENTIRE LENGTH OF BUFFER.
2. PLANT SPECIES TO BE CHOSEN FROM APPROVED SPECIES LIST FROM THE HILLSBOROUGH UNIFIED DEVELOPMENT ORDINANCE ADMINISTRATIVE MANUAL. SUBSTITUTE SPECIES ARE ALLOWED PROVIDED THAT THEY ARE NON-INVASIVE SPECIES AND APPROVED BY THE LANDSCAPE ARCHITECT.
3. ONE SPECIES MAY NOT CONSIST OF MORE THAN 20% OF TOTAL PLANT MATERIAL.
4. A MINIMUM OF 50% OF SHRUBS USED IN THE BUFFER MUST BE EVERGREEN SPECIES.
5. SELECTIONS FOR MID-SIZED OR SMALL SHRUBS MUST BE FULL SIZED SPECIES OR VARIETIES. NO DWARF VARIETIES SHALL BE USED.

SEE SHEET C0.01 FOR ALL PROJECT, SITE, GRADING, STORM DRAINAGE AND UTILITY NOTES

ALL CONSTRUCTION SHALL BE IN ACCORDANCE WITH THE CURRENT TOWN OF HILLSBOROUGH AND NCDOT STANDARDS, SPECIFICATIONS, AND DETAILS.

PRELIMINARY DRAWING - NOT RELEASED FOR CONSTRUCTION

MCADAMS
The John R. McAdams Company, Inc.
2905 Meridian Parkway
Durham, NC 27713

phone 919. 361. 5000
fax 919. 361. 2269
license number: C-0293, C-187

www.mcadamsco.com

CLIENT

DR HORTON
2000 AERIAL DRIVE
MORRISVILLE, NC 27560
Contact
PHONE: 919. 460. 2943

D·R·HORTON America's Builder

COLLINS RIDGE - PHASE 2
SPECIAL USE PERMIT
258 ORANGE GROVE STREET
HILLSBOROUGH, NC

NORTH CAROLINA PROFESSIONAL LANDSCAPE ARCHITECT SARA RUNGE DONOVAN 2027 NOT FOR CONSTRUCTION

REVISIONS

NO.	DATE	
1	02. 24. 2023	REVISED PER TOWN COMMENTS
2	06. 02. 2023	REVISED PER TOWN COMMENTS
3	08. 04. 2023	REVISED PER TOWN COMMENTS
4	10. 19. 2023	REVISED PER TOWN COMMENTS
5	11. 03. 2023	REVISED PER TOWN COMMENTS
6		

PLAN INFORMATION

PROJECT NO.	DRH-21002
FILENAME	DRH21002-LS1
CHECKED BY	SRD
DRAWN BY	CMXY
SCALE	N/A
DATE	10.17.2022

SHEET

LANDSCAPE NOTES & SCHEDULES

L5.04

M:\Projects\DRH\DRH21002\04-Production\Engineering\Production Drawings\SUP 2\Current Drawings\Special Use Permit Drawings\DRH21002-LS1.dwg, 11/29/2023 11:30:56 AM, Anders Lindquist

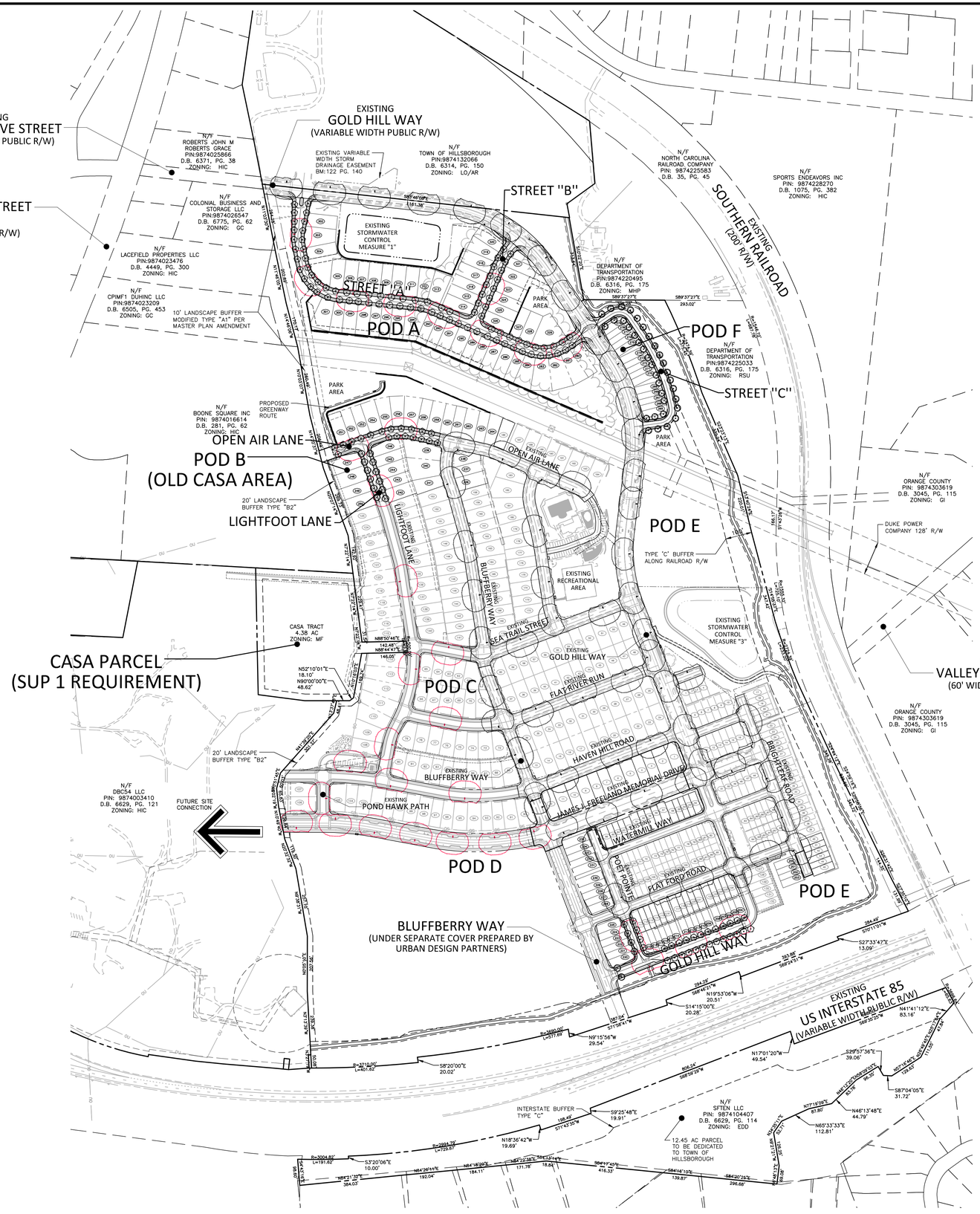

Outdoor Lighting

LED (Light-emitting diode)	50 watts
Mounting height	20', 25', 35'
Color	Gray | Black
Pole	Fiberglass Metal Wood
Applications	Neighborhoods Parks Streets

Light source: LED *(white)*
Wattage: 50 watts, ~~70 watts~~
Lumens: 5,232 – 8,170
Light pattern: IESNA Type II, ~~III, V~~
IESNA cutoff classification: Full-cutoff
BUG rating: Type II – B1U0G2 (50w) ~~B2U0G2 (70w)~~
~~Type III – B1U0G1~~
~~Type V – B3U0G1 (50w only)~~
Color temperature: 3,000K

light distribution patterns

POLE AVAILABLE	MOUNTING HEIGHT	COLOR
Fiberglass	25', 30', 35'	Gray, Black (additional cost)
Wood	25', 30', 35'	Standard
Metal (Special conditions)	25', 30', 35'	Galvanized

FEATURES	BENEFITS
Turnkey operation	Provides hassle-free installation and service
Little or no installation cost	Frees up capital for other projects
Design services by lighting professionals included	Meets industry standards and lighting ordinances
Maintenance, electricity & warranty included	Eliminates high and unexpected repair bills
One low monthly cost on your electric bill	Convenience and savings for you

For additional information, contact
us at **ODLCarolinas@duke-energy.com.**

DUKE ENERGY. PROGRESS
BUILDING A SMARTER ENERGY FUTURE ®

©2022 Duke Energy Corporation 2222398 DEP 9/22

LIGHTING NOTES:

1. LIGHT FIXTURES TO BE INSTALLED BY DUKE ENERGY, CONTRACTOR SHALL INSTALL CONDUIT UNDER ALL DRIVEWAYS AND UNDER ROADWAY NEAR LIGHT FIXTURE LOCATIONS.
2. STREET LIGHTS SHALL BE PROVIDED AT ALL INTERSECTIONS, AND AT LEAST EVERY 175 FEET ALONG A STREET. ON MULTI-LANE BOULEVARDS, LIGHTS SHALL BE PROVIDED ALONG BOTH SIDES OF THE STREET.
3. ALL LIGHT FIXTURES TO BE INSTALLED MUST BE 25 FEET OR LESS IN HEIGHT PER APPROVED MASTER PLAN.
4. PROPOSED HOURS OF OPERATION FOR PROPOSED STREET LIGHTS SHALL BE FROM DUSK TO DAWN.
5. THE DEVELOPER OR HOA WILL BE RESPONSIBLE FOR PAYING FOR THE STREET LIGHTS FOR THE FIRST THREE YEARS AFTER THE STREET ARE ACCEPTED FOR TOWN MAINTENANCE. THE TOWN OF HILLSBOROUGH WILL BEGIN PAYING FOR LIGHTING AFTER THE LIGHTS HAVE BEEN IN PLACE FOR THREE YEARS. THE TOWN WILL NOT BE RESPONSIBLE FOR DECORATIVE STREET LIGHTING OR ANY LIGHTS LOCATED ON PRIVATE PROPERTY OR WITHIN PRIVATE RIGHTS-OF-WAY.
6. THE COLOR TEMPERATURE FOR ALL LIGHTING WITHIN THE TOWN OF HILLSBOROUGH SHALL BE 3,000K. CONTRACTOR/DEVELOPER SHALL WORK WITH DUKE ENERGY TO ENSURE THAT THE LIGHTING MEETS THE TOWN'S 3,000K REQUIREMENT.

LIGHTING LEGEND

EXISTING LIGHT POLE

PROPOSED LIGHT POLE

GRAPHIC SCALE
0 100 200 400
1 inch = 200 ft.

SEE SHEET C0.01 FOR ALL PROJECT, SITE, GRADING, STORM DRAINAGE AND UTILITY NOTES

ALL CONSTRUCTION SHALL BE IN ACCORDANCE WITH THE CURRENT TOWN OF HILLSBOROUGH AND NCDOT STANDARDS, SPECIFICATIONS, AND DETAILS.

PRELIMINARY DRAWING - NOT RELEASED FOR CONSTRUCTION

MCADAMS
The John R. McAdams Company, Inc.
2905 Meridian Parkway
Durham, NC 27713

phone 919. 361. 5000
fax 919. 361. 2269
license number: C-0293, C-187

www.mcadamsco.com

CLIENT

DR HORTON
2000 AERIAL DRIVE
MORRISVILLE, NC 27560
Contact
PHONE: 919. 460. 2943

D·R·HORTON America's Builder

COLLINS RIDGE - PHASE 2
SPECIAL USE PERMIT
258 ORANGE GROVE STREET
HILLSBOROUGH, NC

NORTH CAROLINA PROFESSIONAL SEAL 21543 ENGINEER BRADLEY A. RHINEHART
PRELIMINARY NOT FOR CONSTRUCTION

REVISIONS

NO.	DATE	
1	02. 24. 2023	REVISED PER TOWN COMMENTS
2	06. 02. 2023	REVISED PER TOWN COMMENTS
3	08. 04. 2023	REVISED PER TOWN COMMENTS
4	10. 19. 2023	REVISED PER TOWN COMMENTS
5	11. 03. 2023	REVISED PER TOWN COMMENTS
6	12. 04. 2023	REVISED PER TOWN COMMENTS

PLAN INFORMATION

PROJECT NO.	DRH-21002
FILENAME	DRH21002-OALP1
CHECKED BY	DLP
DRAWN BY	SJB
SCALE	1" = 200'
DATE	10. 17. 2022

SHEET

OVERALL LIGHTING PLAN

L6.00

M:\Projects\DRH\DRH21002\04-Production\Engineering\Production Drawings\SUP 2\Current Drawings\Special Use Permit Drawings\DRH21002-OALP1.dwg, 12/1/2023 1:35:46 PM, Dwayne Peterson

FRONT ELEVATION - A

FRONT ELEVATION - B

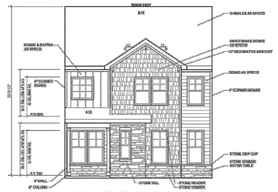

FRONT ELEVATION - A

SCALE: 1/8"=1'-0" INTERIOR UNIT CONDITION

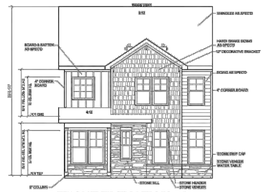

FRONT ELEVATION - A

SCALE: 1/8"=1'-0" END UNIT CONDITION

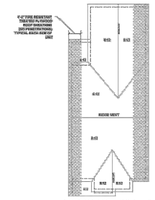

ROOF PLAN - A

SCALE: 1/16"=1'-0"

DR HORTON
LITCHFIELD - T2424
NORTH CAROLINA

D·R·HORTON America's Builder EMERALD

20901578

09/25/2020 TDE

QUICK VIEW

0

DR HORTON
LITCHFIELD - T2424
NORTH CAROLINA

D·R·HORTON America's Builder EMERALD

20901578

09/25/2020 TDE

ELEVATIONS AND ROOF PLAN

1A

RIGHT SIDE ELEVATION - A

SCALE: 1/8"=1'-0" INTERIOR UNIT CONDITION

LEFT SIDE ELEVATION - A

SCALE: 1/8"=1'-0"

DR HORTON
LITCHFIELD - T2424
NORTH CAROLINA

D·R·HORTON America's Builder EMERALD

20901578

09/25/2020 TDE

ELEVATIONS

2A

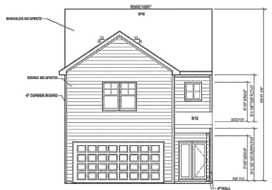

REAR ELEVATION - A

SCALE: 1/8"=1'-0" INTERIOR UNIT CONDITION

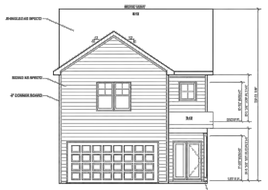

REAR ELEVATION - A

SCALE: 1/8"=1'-0" END UNIT CONDITION

DR HORTON
LITCHFIELD - T2424
NORTH CAROLINA

D·R·HORTON America's Builder EMERALD

20901578

09/25/2020 TDE

ELEVATIONS

2.1A

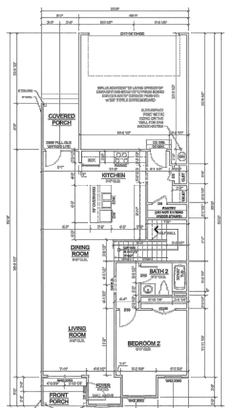

FIRST FLOOR PLAN - A

SCALE: 1/8"=1'-0" INTERIOR UNIT CONDITION

DR HORTON
LITCHFIELD - T2424
NORTH CAROLINA

D·R·HORTON America's Builder EMERALD

20901578

09/25/2020 TDE

FIRST FLOOR PLAN

4A

McADAMS

The John R. McAdams Company, Inc.
2905 Meridian Parkway
Durham, NC 27713

phone 919. 361. 5000
fax 919. 361. 2269
license number: C-0293, C-187

www.mcadamsco.com

CLIENT

DR HORTON
2000 AERIAL DRIVE
MORRISVILLE, NC 27560
Contact
PHONE: 919. 460. 2943

D·R·HORTON America's Builder

COLLINS RIDGE - PHASE 2
SPECIAL USE PERMIT
258 ORANGE GROVE STREET
HILLSBOROUGH, NC

REVISIONS

NO.	DATE	
1	02. 24. 2023	REVISED PER TOWN COMMENTS
2	06. 02. 2023	REVISED PER TOWN COMMENTS
3	08. 04. 2023	REVISED PER TOWN COMMENTS
4	10. 19. 2023	REVISED PER TOWN COMMENTS
5	11. 03. 2023	REVISED PER TOWN COMMENTS
6	12. 04. 2023	REVISED PER TOWN COMMENTS

PLAN INFORMATION

PROJECT NO.	DRH-21002
FILENAME	DRH21002-ARCH1
CHECKED BY	DLP
DRAWN BY	SJB
SCALE	NTS
DATE	10. 17. 2022

SHEET

BUILDING ELEVATIONS

A1.00

SEE SHEET C0.01 FOR ALL PROJECT, SITE, GRADING, STORM DRAINAGE AND UTILITY NOTES

ALL CONSTRUCTION SHALL BE IN ACCORDANCE WITH THE CURRENT TOWN OF HILLSBOROUGH AND NCDOT STANDARDS, SPECIFICATIONS, AND DETAILS.

PRELIMINARY DRAWING - NOT RELEASED FOR CONSTRUCTION

M:\Projects\DRH\DRH21002\04-Production\Engineering\Production Drawings\SUP 2\Current Drawings\Special Use Permit Drawing\DRH21002-ARCH1.dwg, 12/7/2023 1:35:58 PM, Dwayne Peterson

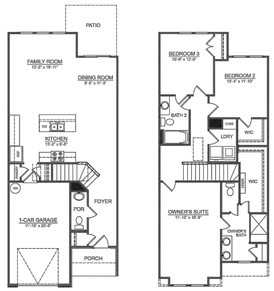

1st FLOOR 2nd FLOOR

LANSING

T242/22/50/1698

HOME AND COMMUNITY INFORMATION, INCLUDING PRICING, INCLUDED FEATURES, TERMS, AVAILABILITY AND AMENITIES, ARE SUBJECT TO CHANGE AND PRIOR SALE AT ANY TIME WITHOUT NOTICE OR OBLIGATION. PICTURES, PHOTOGRAPHS, FEATURES, COLORS & SIZES ARE APPROXIMATE FOR ILLUSTRATION PURPOSES ONLY AND WILL VARY FROM THE HOMES AS BUILT. SEE A SALES REPRESENTATIVE FOR MORE INFORMATION.

2019.04.24/Rev.2020.02.27

D·R·HORTON America's Builder

TOWNHOMES

CARSON LANSING DENVER LANSING CARSON

2019.04.24/Rev.2020.02.27

D·R·HORTON America's Builder

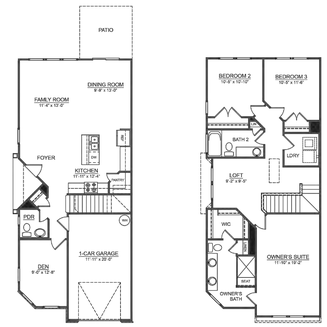

1st FLOOR 2nd FLOOR

CARSON

T243/22/50/1760

1st FLOOR 2nd FLOOR

DENVER

T241/22/50/1567

HOME AND COMMUNITY INFORMATION, INCLUDING PRICING, INCLUDED FEATURES, TERMS, AVAILABILITY AND AMENITIES, ARE SUBJECT TO CHANGE AND PRIOR SALE AT ANY TIME WITHOUT NOTICE OR OBLIGATION. PICTURES, PHOTOGRAPHS, FEATURES, COLORS & SIZES ARE APPROXIMATE FOR ILLUSTRATION PURPOSES ONLY AND WILL VARY FROM THE HOMES AS BUILT. SEE A SALES REPRESENTATIVE FOR MORE INFORMATION.

2019.04.24/Rev.2020.02.27

SEE SHEET C0.01 FOR ALL PROJECT, SITE, GRADING, STORM DRAINAGE AND UTILITY NOTES

ALL CONSTRUCTION SHALL BE IN ACCORDANCE WITH THE CURRENT TOWN OF HILLSBOROUGH AND NCDOT STANDARDS, SPECIFICATIONS, AND DETAILS.

PRELIMINARY DRAWING - NOT RELEASED FOR CONSTRUCTION

MCADAMS

The John R. McAdams Company, Inc.
2905 Meridian Parkway
Durham, NC 27713

phone 919. 361. 5000
fax 919. 361. 2269
license number: C-0293, C-187

www.mcadamsco.com

CLIENT

DR HORTON
2000 AERIAL DRIVE
MORRISVILLE, NC 27560
Contact
PHONE: 919. 460. 2943

D·R·HORTON America's Builder

COLLINS RIDGE - PHASE 2
SPECIAL USE PERMIT
258 ORANGE GROVE STREET
HILLSBOROUGH, NC

NORTH CAROLINA PROFESSIONAL SEAL 21543 ENGINEER BRADLEY A. RHINEHART
PRELIMINARY NOT FOR CONSTRUCTION

REVISIONS

NO.	DATE	
1	02. 24. 2023	REVISED PER TOWN COMMENTS
2	06. 02. 2023	REVISED PER TOWN COMMENTS
3	08. 04. 2023	REVISED PER TOWN COMMENTS
4	10. 19. 2023	REVISED PER TOWN COMMENTS
5	11. 03. 2023	REVISED PER TOWN COMMENTS
6	12. 04. 2023	REVISED PER TOWN COMMENTS

PLAN INFORMATION

PROJECT NO.	DRH-21002
FILENAME	DRH21002-ARCH1
CHECKED BY	DLP
DRAWN BY	SJB
SCALE	NTS
DATE	10. 17. 2022

SHEET

BUILDING ELEVATIONS

A1.01

M:\Projects\DRH\DRH21002\04-Production\Engineering\Production Drawings\SUP 2\Current Drawings\Special Use Permit Drawing\DRH21002-ARCH1.dwg, 12/1/2023 1:36:05 PM, Dwayne Peterson

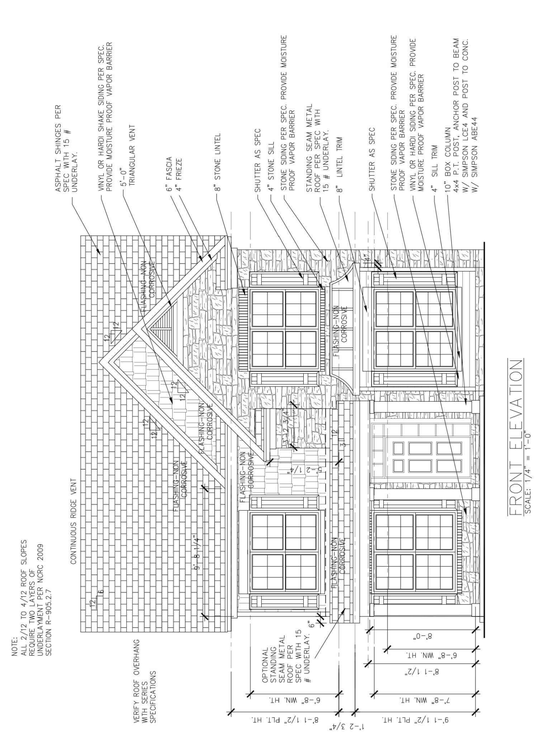

FRONT ELEVATION
SCALE: 1/4" = 1'-0"

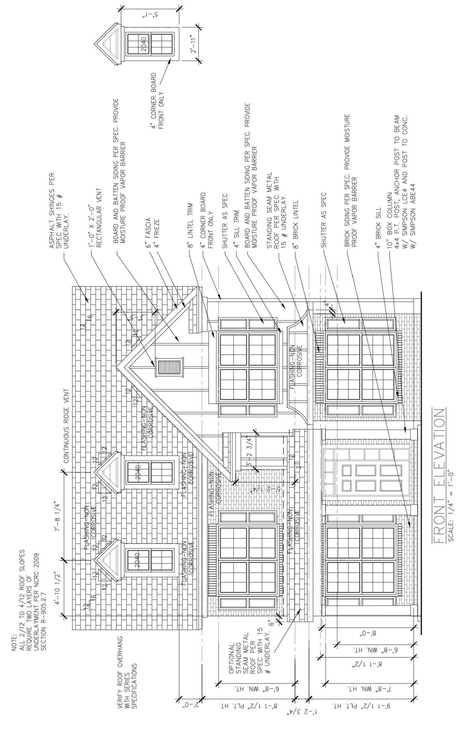

FRONT ELEVATION
SCALE: 1/4" = 1'-0"

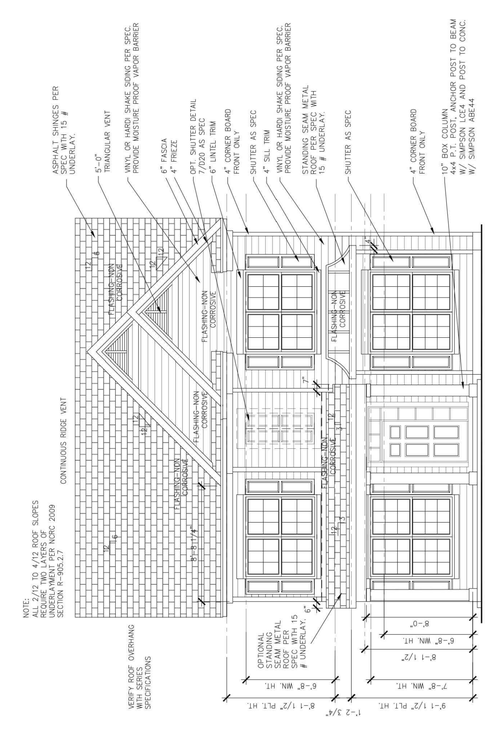

FRONT ELEVATION
SCALE: 1/4" = 1'-0"

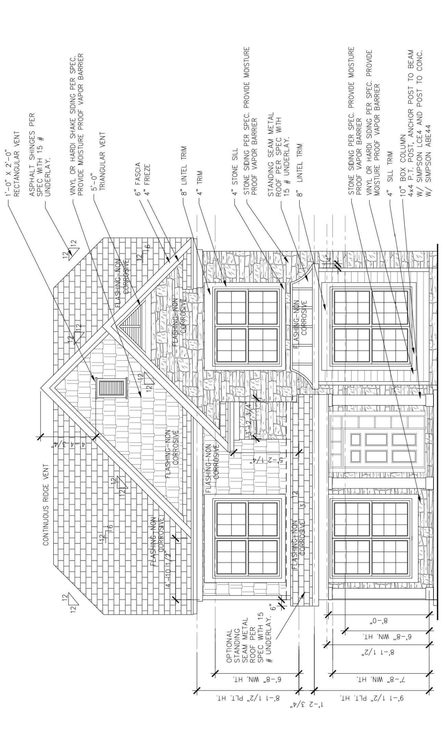

FRONT ELEVATION
SCALE: 1/4" = 1'-0"

ELEVATION A

ELEVATION B

ELEVATION C

ELEVATION D

ELEVATION E

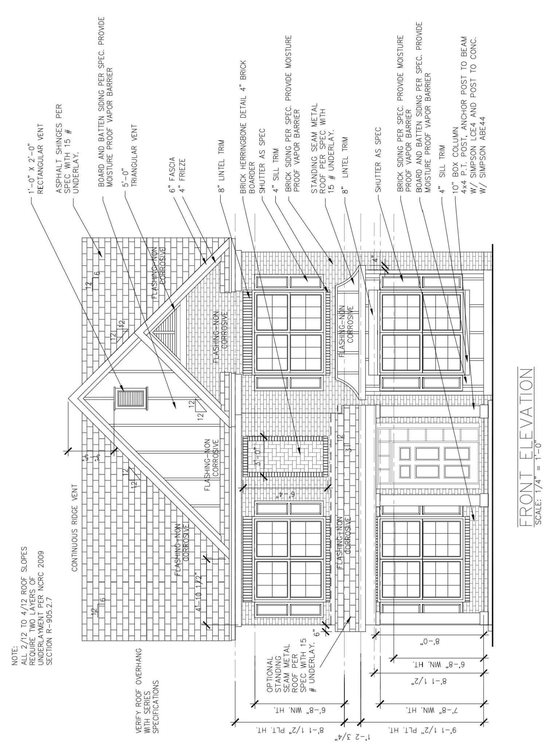

FRONT ELEVATION
SCALE: 1/4" = 1'-0"

SEE SHEET C0.01 FOR ALL PROJECT, SITE, GRADING, STORM DRAINAGE AND UTILITY NOTES

ALL CONSTRUCTION SHALL BE IN ACCORDANCE WITH THE CURRENT TOWN OF HILLSBOROUGH AND NCDOT STANDARDS, SPECIFICATIONS, AND DETAILS.

PRELIMINARY DRAWING - NOT RELEASED FOR CONSTRUCTION

MCADAMS

The John R. McAdams Company, Inc.
2905 Meridian Parkway
Durham, NC 27713

phone 919. 361. 5000
fax 919. 361. 2269
license number: C-0293, C-187

www.mcadamsco.com

CLIENT

DR HORTON
2000 AERIAL DRIVE
MORRISVILLE, NC 27560
Contact
PHONE: 919. 460. 2943

D·R·HORTON
America's Builder

COLLINS RIDGE - PHASE 2
SPECIAL USE PERMIT
258 ORANGE GROVE STREET
HILLSBOROUGH, NC

NORTH CAROLINA PROFESSIONAL ENGINEER SEAL 21543 BRADLEY A. RHINEHART
NOT FOR CONSTRUCTION

REVISIONS

NO.	DATE	
1	02. 24. 2023	REVISED PER TOWN COMMENTS
2	06. 02. 2023	REVISED PER TOWN COMMENTS
3	08. 04. 2023	REVISED PER TOWN COMMENTS
4	10. 19. 2023	REVISED PER TOWN COMMENTS
5	11. 03. 2023	REVISED PER TOWN COMMENTS
6	12. 04. 2023	REVISED PER TOWN COMMENTS

PLAN INFORMATION

PROJECT NO.	DRH-21002
FILENAME	DRH21002-ARCH1
CHECKED BY	DLP
DRAWN BY	SJB
SCALE	NTS
DATE	10. 17. 2022

SHEET

BUILDING ELEVATIONS

A1.02

M:\Projects\DRH\DRH21002\04-Production\Engineering\Production Drawings\SUP 2\Current Drawings\Special Use Permit Drawings\DRH21002-ARCH1.dwg, 12/1/2023 1:36:10 PM, Dwayne Peterson

ATTACHMENT #2

Future Land Use Map and UDO Provisions Relative to the Case

Future Land Use Map Classification:

North of I-85:

Mixed-residential Neighborhood: The dominant land use in any proposed development is expected to be residential based on square footage of proposed structures. Developments may contain a single or variety of dwelling types and densities or may integrate a variety of supportive commercial, public and semi-public uses and open or public space. Small developments that provide only supportive non-residential land uses in an infill arrangement serving more than 50 dwelling units in a walkable manner may also be considered. **Zoning Districts: R-10; R-15; R-20; Neighborhood Business; Multi-Family; Multifamily Special Use; Entranceway Special Use; Mixed Residential Special Use; Residential Special Use; Special Design Special Use.**

South of I-85:

Employment Area: These areas include a wide range of business, light industrial, office, research and development, along with related/support services uses including restaurants, small scale retail and convenience shopping/services. Buildings and uses will be sited to limit the visual impact of service and warehousing operations, while still providing convenience for business functionality. These areas are in prime locations with good access to major road networks (where capacity exists or is planned) and rail if needed and should be reserved for high return employment generating uses. **Zoning Districts: High Intensity Commercial; Business Park; Economic Development District; Light Industrial, General Industrial; Entranceway Special Use; Special Design Special Use.**

UDO Provisions:

Section 3 (Administrative Procedures), Subsection 3.5 (Creation of New Lots/Division of Land), Paragraph 3.5.2 (The Review Required is Determined by the Number of New Lots to be Created as Follows:)

Sub-paragraph 3.5.2.4

Special subdivisions: Special Use Permit review by the Board of Adjustment to create 20 or more lots.

Paragraph 3.5.6 (Special Subdivisions)

Divisions of land resulting in the creation of twenty (20) or more new lots from a single tract of land in any five (5) year period shall require a Special Use Permit, with review criteria as set forth in Section 5.2.46, *Subdivisions, Major or Special*.

3.5.6.1 Sketch Plan

Prior to submitting a Special Use Permit application, the applicant shall submit a sketch design plan, the elements of which are discussed in the Administrative Manual. In reviewing the proposal, the Planning Department may consider existing development in the area, compatibility with the comprehensive plan for the Town, and the suitability of the land to avoid the unnecessary expense of redesigning unacceptable subdivision proposals. The Planning Department shall make available

to the applicant maps, studies, and reports which indicate land suitability including maps of flood prone areas, soil, conditions, location of historic sites and unique natural areas.

3.5.6.2 Special Use Permit Required

The preliminary plan will be processed according to the Special Use Permit procedure and details found in Section 3.8.

Section 4 (Zoning Districts), Subsection 4.4 (Special Use Districts), Paragraph 4.4.4 (Residential Special Use), Sub-paragraph 4.4.4.1 (Intent):

The purpose of the residential special use district is to create an open-ended use category for unique and diverse housing opportunities within existing residential districts as those districts age and redevelop.

ATTACHMENT #3

Zoning History

December 6, 1979: Town ETJ (Extraterritorial Jurisdiction) established. AR (Agricultural/Residential) zoning applied to property.

Ca. 1995 (?): Portion of property south of I-85 rezoned from AR to EDD (Economic Development District).

March 14, 2016: Collins Ridge tract north of I-85 annexed int town; rezoned for AR to RSU (Residential Special Use). Rezoning approval includes Master Plan governing, among other items, allowable land uses and residential densities, major street alignments, proposed street cross sections, and community amenities.

March 13, 2017: Town Board of Commissioners issue special use permit (#2017-01) for Collins Ridge, Phase 1. Permit authorizes a 672-unit, mixed-residential development consisting of detached single-family homes and attached dwellings (townhomes and apartment complex).

October 25, 2017: Approximately 5.18 acres of land on the east side of the property and adjacent to the railroad right-of-way is condemned by North Carolain Department of Transportation.

December 18, 2017: Assistant Town Manager/Planning Director approves minor change to the issued special use permit plans. Changes involve redesign of project's interior street and lotting arrangements while maintaining compliance with the approved master plan and special use permit.

January 22, 2018: Zoning Compliance Permit #6326 issued for site grading.

January 1, 2021: Chapter 160D (Local Planning and Development Regulation) of the North Carolina General Statutes (NCGS), a complete reorganization and update of the statutes governing local government planning and development, becomes effective state-wide. As a result, local governments' ability to use "conditional or special use district zoning" as a method of approving developments (the process used to approve Collins Ridge) no longer authorized. Instead, use of "conditional zoning" (a rezoning process where the local government and applicant agree on conditions applicable to a particular project) may be used. Local governments retained ability to issue special use permits, but term "conditional use permit" removed as a name for such permit). *Note:* North Carolina Session Law 2019-111 requires that any conditional or special use districts in effect on January 1, 2021, become conditional zoning districts. Any special or conditional use permits issued as part of these approvals remain valid and are deemed a special use permit after that date.

June 14, 2021: Town Board of Commissioners amend UDO (Unified Development Ordinance) for NCGS 160D compliance, but do not adopt a conditional zoning procedure. Under previous UDO, Town Board of Commissioners had authority to issue special use permits while Board of Adjustment had authority to issue conditional use permits. Authority to issue special use permits transferred to Board of Adjustment.

October 11, 2021: Town Board of Commissioners, in coordination with the Collins Ridge developer, amend conditions of Collins Ridge Master Plan. Amended conditions relate to timing of land donation of affordable housing tract and re-location of portion of perimeter greenway trail.

October 17, 2022: Complete application for special use permit application for Collins Ridge, Phase 2 submitted.

November 4, 2022: Consent Judgment relative to October 25, 2017, property condemnation recorded with Orange County Register of Deeds.

June 12, 2023: Town Board of Commissioners, in coordination with the Collins Ridge developer, amend conditions of Collins Ridge Master Plan. Amended conditions relate to: timing of land donation for affordable housing tract; perimeter buffer requirement appliable to Phase 2; dedication of land to town; tree removal in buffer adjacent to I-85 to accommodate greenway trail; use of previously approved street cross sections in Phase 2; stubbing of Open Air Lane (Phase 2) to adjacent property to west; timing of second project access to South Churton Street (James J. Freeland memorial Drive); timing of certain South Churton Street roadway improvements; acknowledgment of land area reduction in Pods E and F due to condemnation of additional land for rail corridor re-alignment; payment to town for defrayment of sewer flow monitoring; lot width variation; public infrastructure certification and acceptance in Phases 1A and 2; and changes to land uses allowed in Pod A (part of Phase 2).