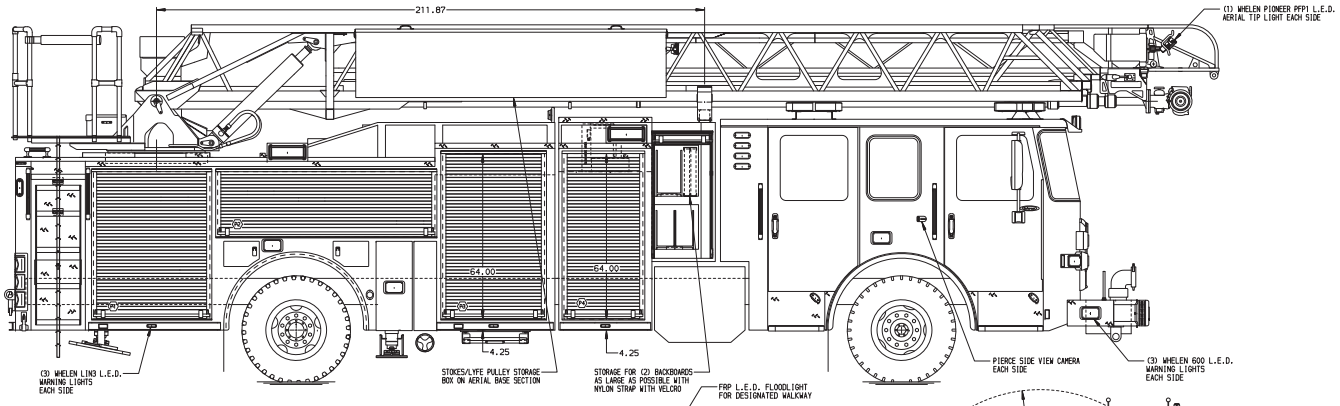

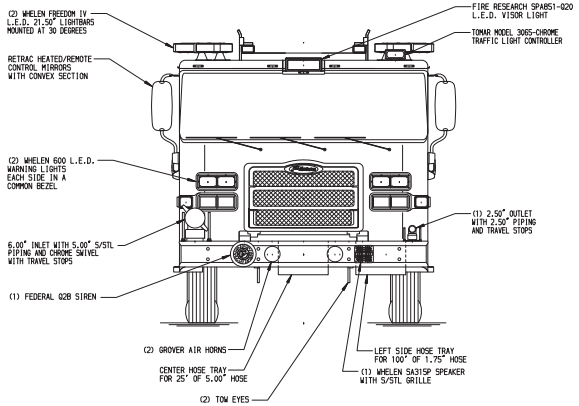

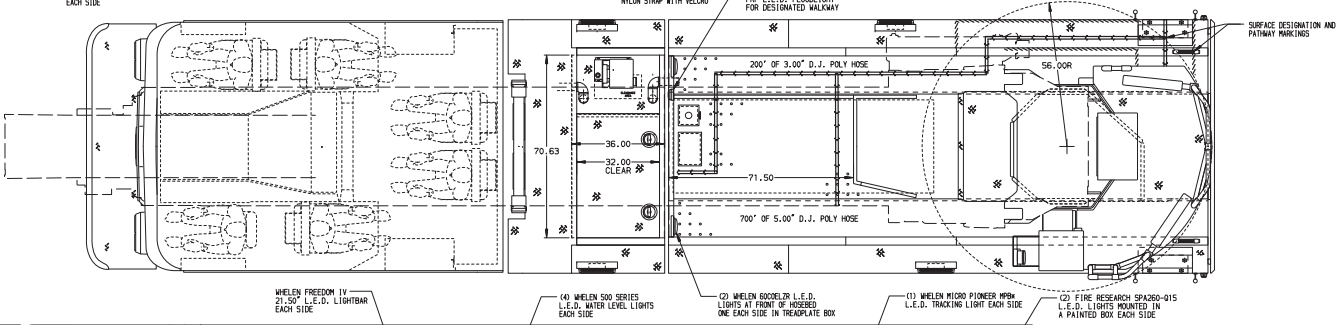

BODY	WATER TANK
107' Heavy Duty Alum Body	470 Gallon PAL Poly Water Tank
COMPT,DRIVER SIDE FRONT	**Foam System**
Full Height RollUp Forward	Husky 3 Single Agent Foam System
COMPT,DRIVER SIDE REAR	**Foam Cell**
Full Height RollUp Rearward	30 Gallon Foam Cell, Reduced Water
COMPT,PASSENGER SIDE FRONT	
Full Height RollUp Forward	
COMPT,PASSENGER SIDE REAR	
Full Height RollUp Rearward	

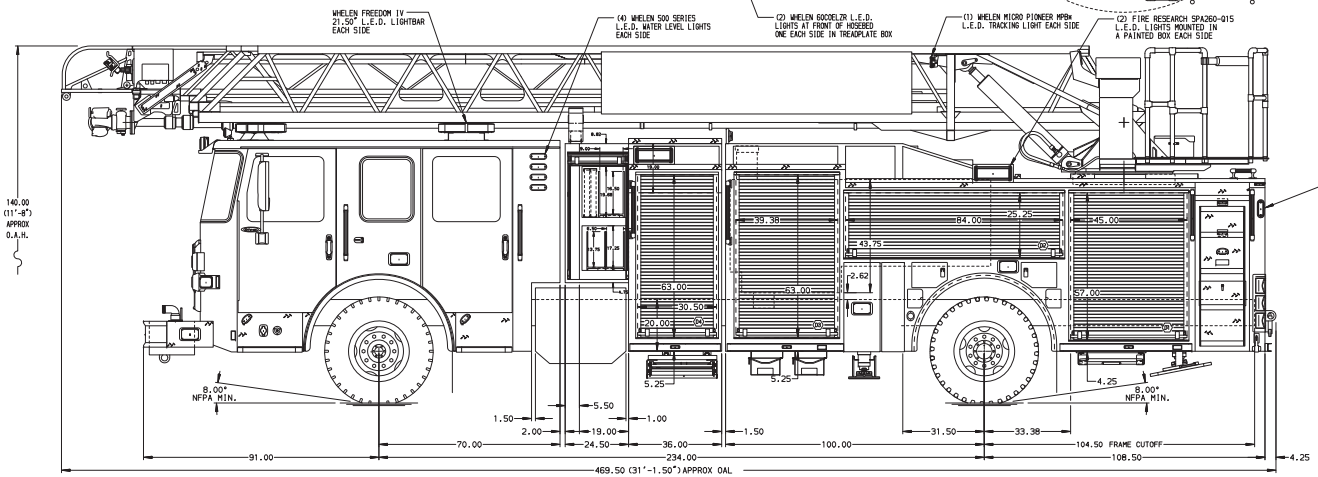

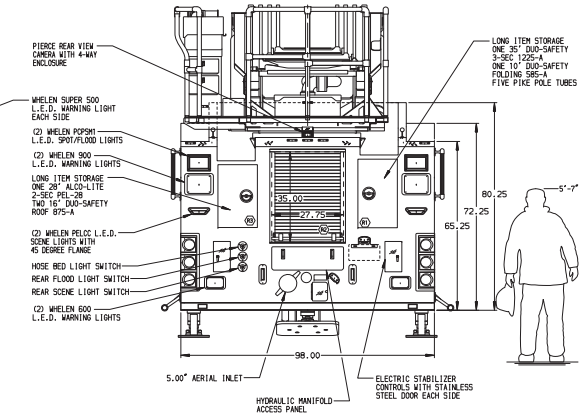

CHASSIS	CAB	AXLE,FRONT,CUSTOM	TRANSMISSION	PUMPHOUSE	CROSSLAYS,1.50"	MAXIMUM OVERALL HEIGHT
Enforcer Chassis	7000 Enforcer Cab	22,800 Lb Dana Axle	ALlison 5th Gen, 4500 EVS P	Control Zone, PAL/PAP PUC	(2) 1.50",FuLL Width Trays,200'	MAX O.A.H.=140" (11'-8")
ENGINE	**BUMPER**	**AXLE,REAR**		**PUMP**	**CROSSLAYS,2.50"**	
525 HP DD13 Engine	22" Extended Stainless Steel	33,500 Lb Meritor Axle		1500 GPM Pierce PUC	(1) 2.50",FuLL Width Tray,200'	

NOTE

DIMENSIONS SHOWN ARE APPROXIMATE AND ARE SUBJECT TO MINOR DEVIATIONS AS MAY OCCUR OR BE NECESSARY IN CONSTRUCTION.
MINOR DETAILS NOT SHOWN.

1. SHORELINE RECEPTACLE WITH KUSSMAUL SUPER AUTO-EJECT LOCATED IN THE DRIVER SIDE LOWER STEP WELL OF CAB
2. L.E.D. INDICATOR LIGHT MOUNTED ADJACENT TO THE SHORELINE RECEPTACLE
3. AIR INLET/OUTLET WITH DISCONNECT FITTING LOCATED ON THE DRIVER SIDE PUMP PANEL
4. BATTERY CHARGER LOCATED BEHIND DRIVER'S SEAT
5. BATTERY CHARGE INDICATOR LOCATED ON D.S. SEAT RISER
6. ADJUSTABLE SHELVES IN COMPARTMENTS PER SHOP ORDER
7. ONE FLOOR MOUNTED SLIDE-OUT TRAY IN COMPARTMENT D1,D3,P1,P3,R2
8. ONE SWING-OUT ALUMINUM TOOL BOARD IN COMPARTMENT D1,P2
9. ONE VERTICAL PARTITION IN COMPARTMENT P2
10. ALUMINUM PEGBOARD WITH TRACKS ON THE REAR WALL OF COMPARTMENT P1
11. CAB LIFT MANUAL OVERRIDE IN COMPARTMENT P4
12. NON-RAISED AERIAL PEDESTAL
13. 1500 GPM HIGH FLOW WATERWAY
14. L.E.D. LIGHTING ON AERIAL LADDER SECTIONS
15. LYFEPULLEY RESCUE SYSTEM
16. 12V DC POWER TO AERIAL TIP

REV	DATE	BY	CH
2	27DEC16	SHU	CRI
1	21DEC16	TKA	SHE

CHASSIS DATA
MAKE: PIERCE
MODEL: ENFORCER

Pierce MANUFACTURING INC.

TITLE: PIERCE 107' ASCENDANT AERIAL APPROVAL DRAWING
FOR: CAHABA VALLEY FIRE & EMERGENCY DISTRICT BIRMINGHAM, AL
DWG NO.: 30368AD

JOB NO.	30368
SCALE	1:24
DATE	
DRAWN BY	TKA 13JUN16
CHECKED BY	CRI 15JUN16
SHEET SIZE	D
SHEET NO.	1 OF 1

View File Created 02-JAN-2017 07:21:00