exhibit D

SHEET INDEX

COLORADO REGISTERED KENNETH ALAN JESIK 33405 PROFESSIONAL ENGINEER

5/29/2024

1,200 900 600 0 600 1,200
1"=600'

NO.	REVISION	APPV'D	DATE
1	Sheet D-3	2	15 24
2	Sheet D-4	3	18 24
3	Utilities		5/28/24
4	Sheet N-1		5/29/24

Lucy Lane

Plan View
Vicinity Map

DESIGNED BY KAY
DRAWN BY KAY/GH
CHECKED BY JAJ
PROJECT NUMBER 23-9538

Jesik
800 W. 8th Street
Pueblo, Colorado 81003
(719) 582-5588
WWW.JESIK.US

DATE 5/28/24

SCALE
HORZ : 1"=500'
VERT : –

SHEET Cover

SHEET OF

LEGEND

- Existing Contour (1')
- Existing Contour (5')
- Proposed Contour (1')
- Existing Sanitary Sewer Main
- Existing Potable Water Main
- Existing Overhead Electric
- Proposed Sanitary Sewer Main
- Proposed Potable Water Main
- Proposed Gas Main
- Proposed Storm Sewer/Culvert
- Proposed Underground Electric
- Proposed Underground Commun
- Proposed Right-of-Way
- Existing/Proposed Easement
- Proposed Edge Gravel Road

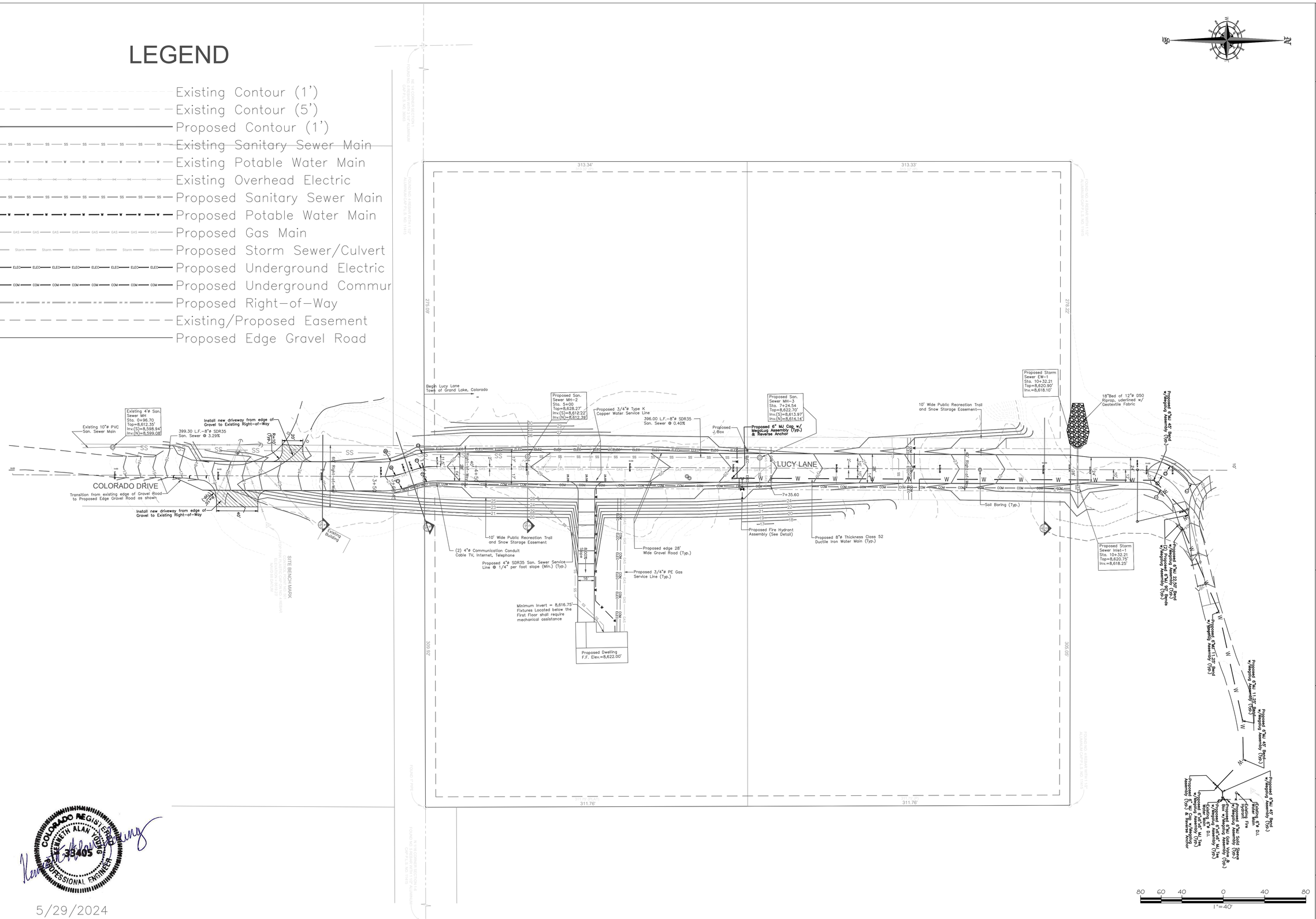

COLORADO REGISTERED KENNETH ALAN YOUNG 33405 PROFESSIONAL ENGINEER

5/29/2024

NO.	REVISION	APPV'D DATE
1	Lucy Lane	11/10/23
2	Lucy Lane	12/20/23
3	Lucy Lane	1/03/24
4	Lucy Lane Utilities	1/31/24
5	Utilities	5/28/24
6	Utilities	5/29/24

Lucy Lane

Plan View Site Grading and Utilities

DESIGNED BY	KAY
DRAWN BY	KAY/GH
CHECKED BY	JAJ
PROJECT NUMBER	23-9538

Jesik

800 W. 8th Street
Pueblo, Colorado 81003
(719) 582-5588
WWW.JESIK.US

DATE
5/29/24

SCALE
HORZ : 1"=40'
VERT : -

SHEET
P-1

SHEET OF

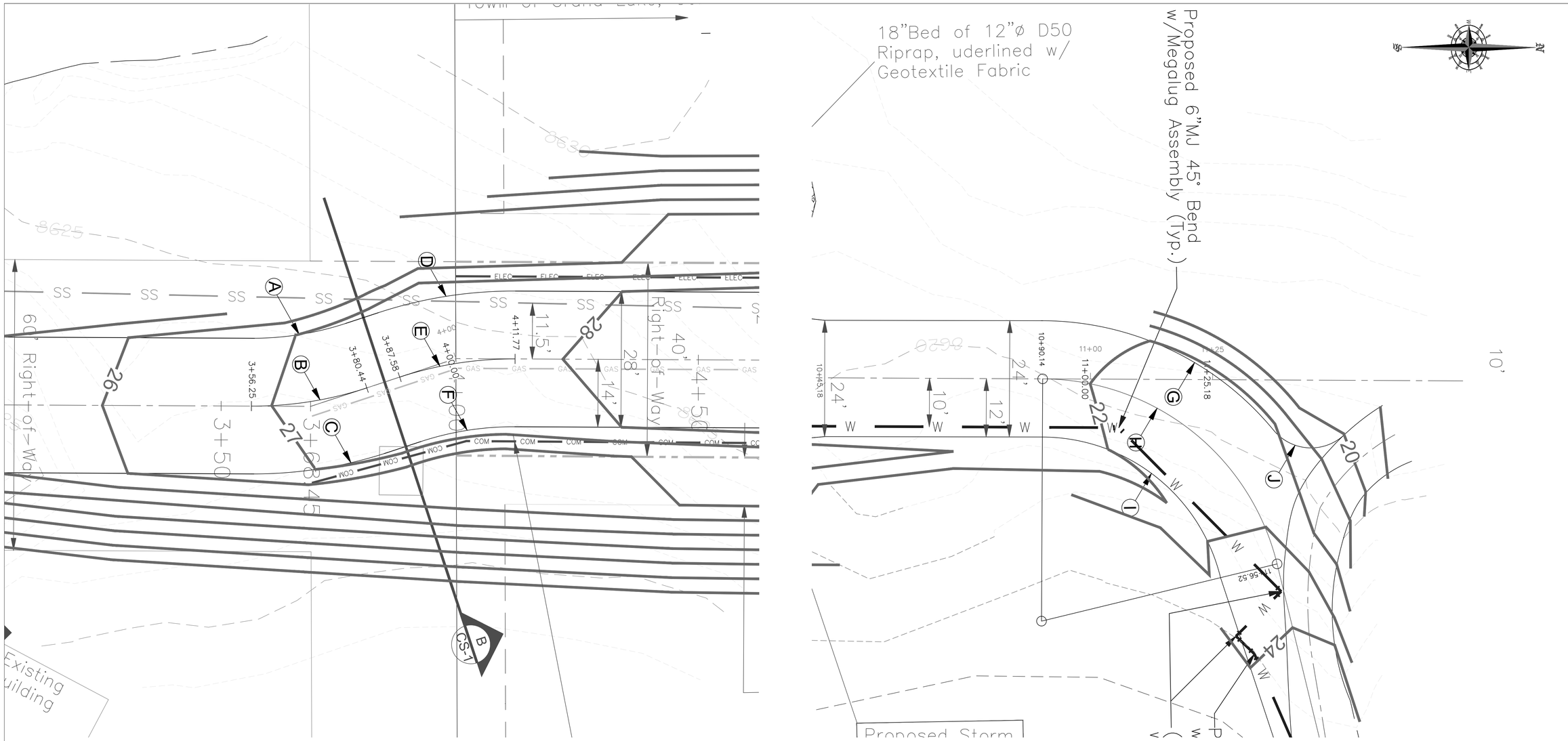

Lucy Lane Horizontal Curve Geometry

Curve	Sta PC	Sta PT	D	R	L	Δ	Δ/2	T	LC	LC Bearing
Horiz. Curve Designation	Pt. of Curvature	Pt. of Tangency	Degree of Curvature (Degrees/100 ft.)	Radius in feet	Length of Curve (ft.)	Central Angle (Decimal Degrees)	1/2 Central Angle (Decimal Degrees)	Tangent Length (ft.)	Long Chord (ft.)	Long Chord Bearing
A	356.25	380.44	93.93	61.00	19.68	18.48	9.24	9.93	19.59	N 7°57'55" E
B	356.25	380.44	76.39	75.00	24.19	18.48	9.24	12.20	24.09	N 7°57'55" E
C	356.25	380.44	64.38	89.00	28.71	18.48	9.24	14.48	28.59	N 7°57'55" E
D	387.58	411.77	93.93	61.00	19.68	18.48	9.24	9.93	19.59	N 7°57'55" E
E	387.58	411.77	76.39	75.00	24.19	18.48	9.24	12.20	24.09	N 7°57'55" E
F	387.58	411.77	64.38	89.00	28.71	18.48	9.24	14.48	28.59	N 7°57'55" E
G	1090.14	1134.01	92.41	62.00	54.79	50.63	25.32	29.33	53.02	N 39°18'36" E
H	1090.14	1156.52	114.59	50.00	66.38	76.07	38.03	39.11	61.61	N 39°18'36" E
I	1090.14	1156.52	150.78	38.00	50.45	76.07	38.03	29.72	46.83	N 39°18'36" E
J			572.96	10.00	16.36	93.77	46.88	10.68	14.60	N 4°40'13" E

COLORADO REGISTERED KENNETH ALAN YOUNG 33405 PROFESSIONAL ENGINEER

5/29/2024

20 15 10 0 10 20
1"=10'

NO.	REVISION	APPV'D	DATE
1	Lucy Lane		11/10/23
2	Lucy Lane		12/20/23
3	Lucy Lane		1/03/24
4	Lucy Lane Utilities		1/31/24
5	Utilities	5/28/24	
6	Utilities	5/29/24	

Lucy Lane

Plan View
Horizontal Curve
Geometry

DESIGNED BY KAY
DRAWN BY KAY/GH
CHECKED BY JAJ
PROJECT NUMBER 23-9538

Jesik

800 W. 8th Street
Pueblo, Colorado 81003
(719) 582-5588
WWW.JESIK.US

DATE 5/29/24

SCALE
HORZ : 1"=10'
VERT : –

SHEET P-2

SHEET OF

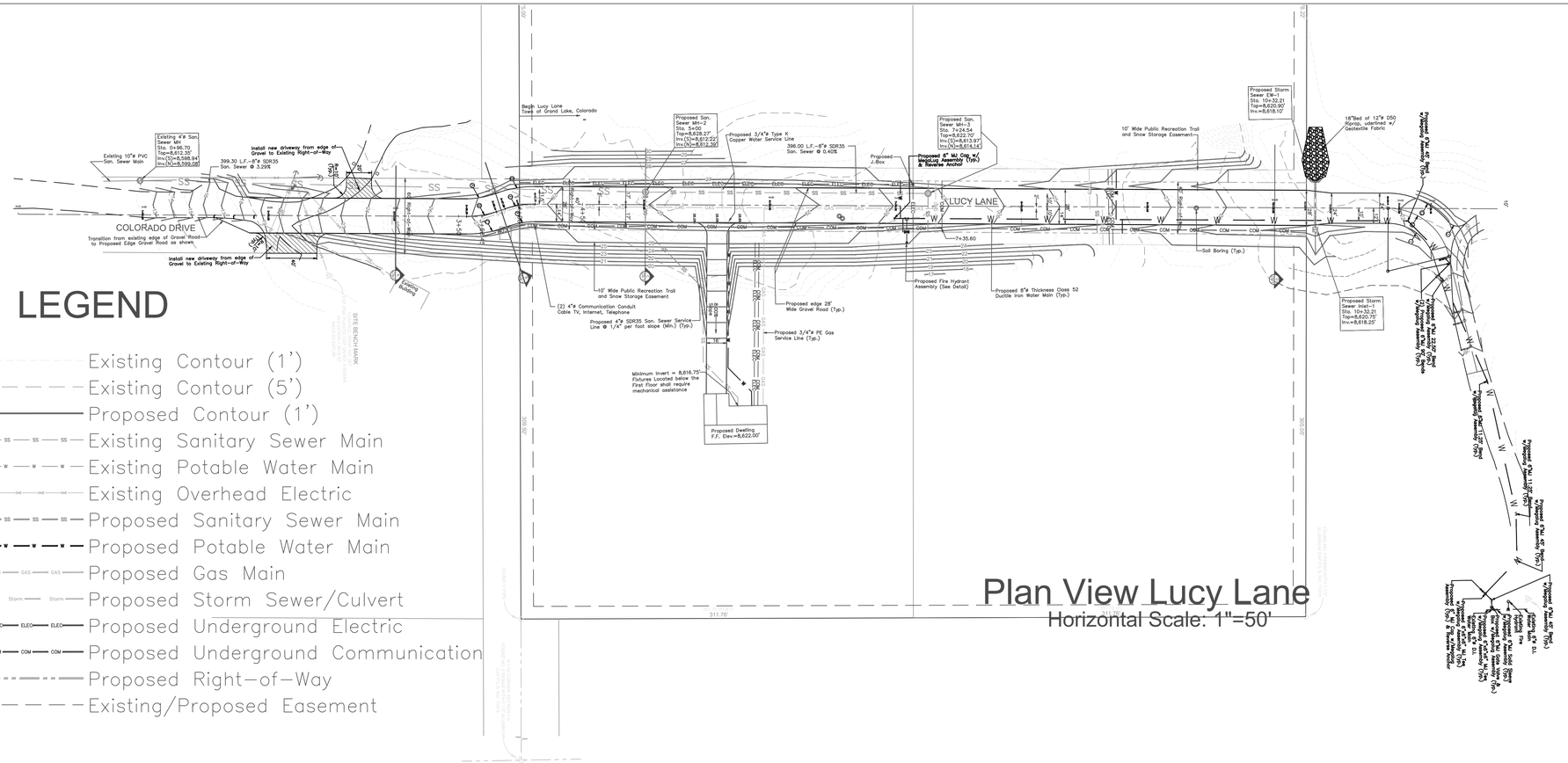

LEGEND

- Existing Contour (1')
- Existing Contour (5')
- Proposed Contour (1')
- Existing Sanitary Sewer Main
- Existing Potable Water Main
- Existing Overhead Electric
- Proposed Sanitary Sewer Main
- Proposed Potable Water Main
- Proposed Gas Main
- Proposed Storm Sewer/Culvert
- Proposed Underground Electric
- Proposed Underground Communication
- Proposed Right-of-Way
- Existing/Proposed Easement

Plan View Lucy Lane

Horizontal Scale: 1"=50'

COLORADO REGISTERED PROFESSIONAL ENGINEER KENNETH ALAN YOUNG 33405

5/29/2024

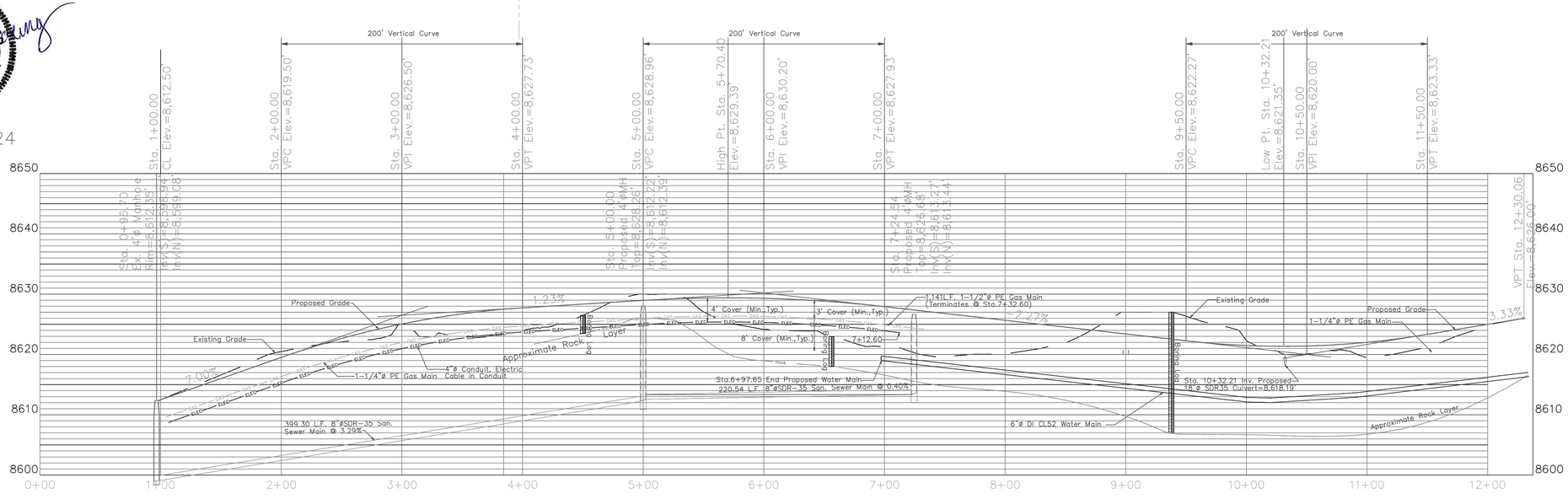

Profile View Lucy Lane

Horizontal Scale: 1"=50'
Vertical Scale: 1"=10'

NO.	REVISION	APPV'D DATE
1	Lucy Lane	11/10/23
2	Lucy Lane	12/20/23
3	Lucy Lane	1/03/24
4	Lucy Lane Utilities	1/31/24
5	Utilities	5/28/24
6	Utilities	5/29/24

Lucy Lane

Plan and Profile View

DESIGNED BY KAY
DRAWN BY KAY/GH
CHECKED BY JAJ
PROJECT NUMBER 23-9538

Jesik
800 W. 8th Street
Pueblo, Colorado 81003
(719) 582-5588
WWW.JESIK.US

DATE 5/29/24

SCALE
HORZ : 1"=50'
VERT : 1"=10'

SHEET PP-1

SHEET OF

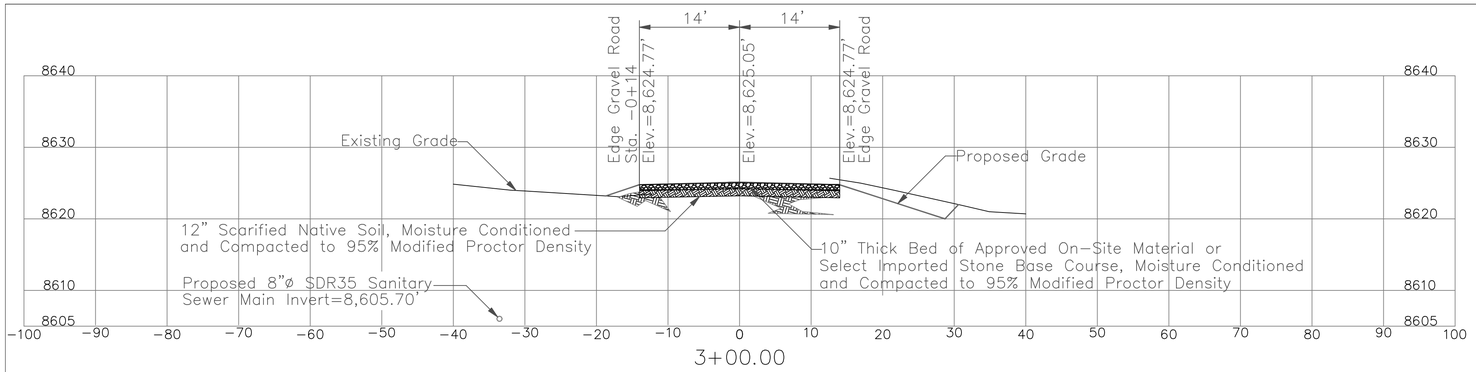

Cross Section A - Station 3+00

Horiz. Scale: 1"=10', Vert. Scale: 1"=10'

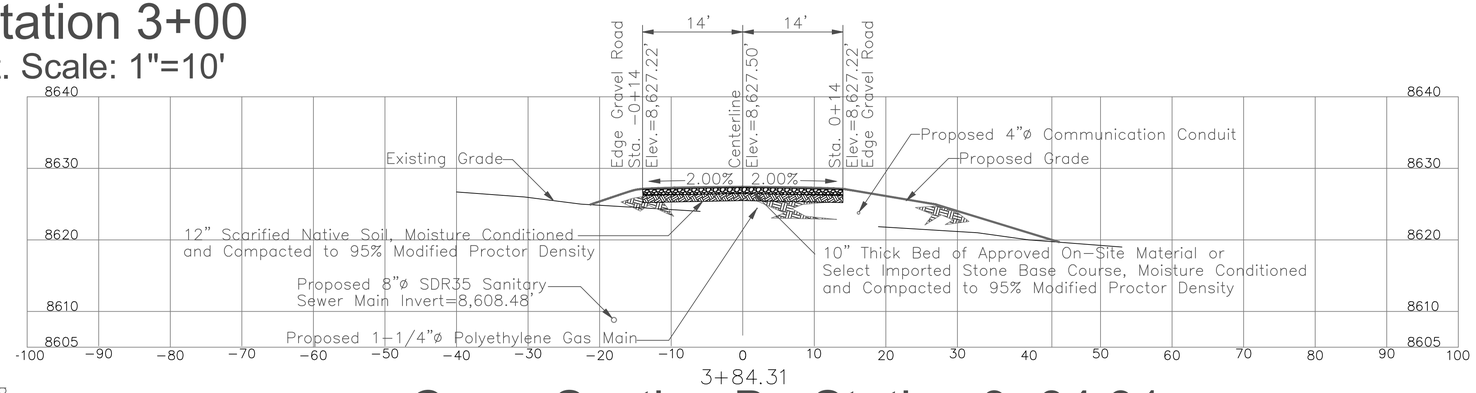

Cross Section B - Station 3+84.31

Horiz. Scale: 1"=10', Vert. Scale: 1"=10'

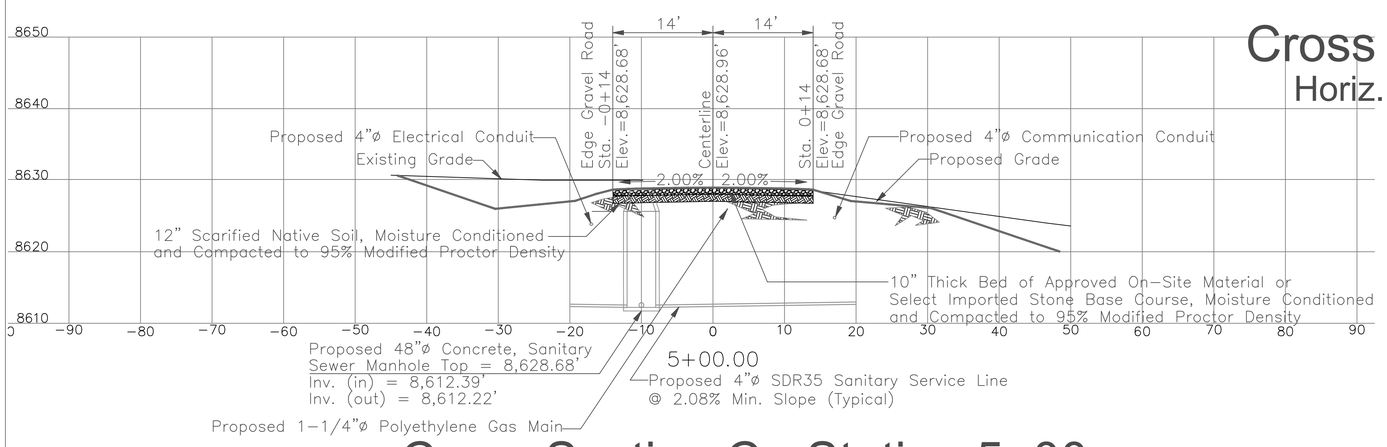

Cross Section C - Station 5+00

Horiz. Scale: 1"=10', Vert. Scale: 1"=10'

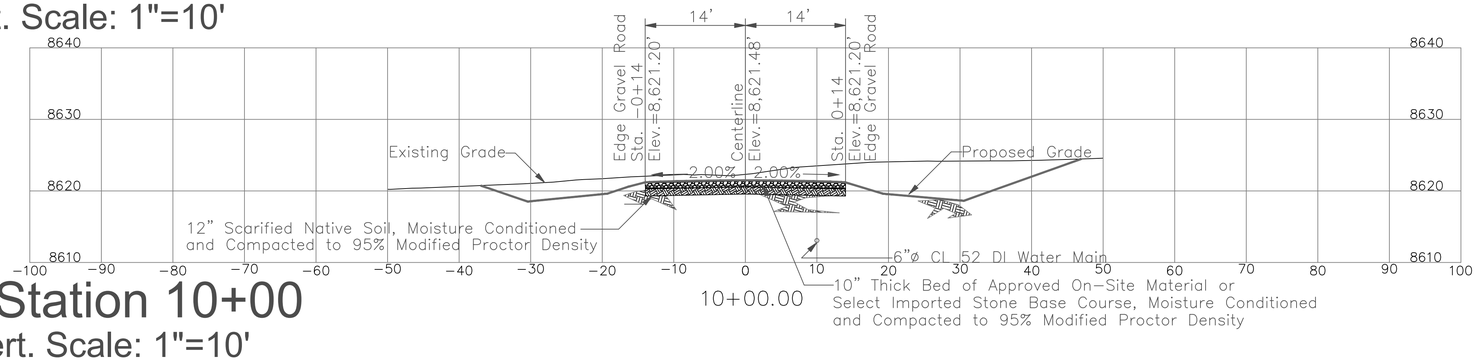

Cross Section D - Station 10+00

Horiz. Scale: 1"=10', Vert. Scale: 1"=10'

NO.	REVISION	APPV'D DATE
1	Utilities	5/28/24
2	Utilities	5/29/24
3		
4		

Lucy Lane

Cross Sections

COLORADO REGISTERED PROFESSIONAL ENGINEER KENNETH ALAN KOUDELKA 38405

5/29/2024

DESIGNED BY KAY

DRAWN BY KAY/GH

CHECKED BY JAJ

PROJECT NUMBER 23-9538

Jesik

800 W. 8th Street
Pueblo, Colorado 81003
(719) 582-5588
WWW.JESIK.US

DATE 5/29/24

SCALE
HORZ : 1"=10'
VERT : 1"=10'

SHEET CS-1

SHEET OF

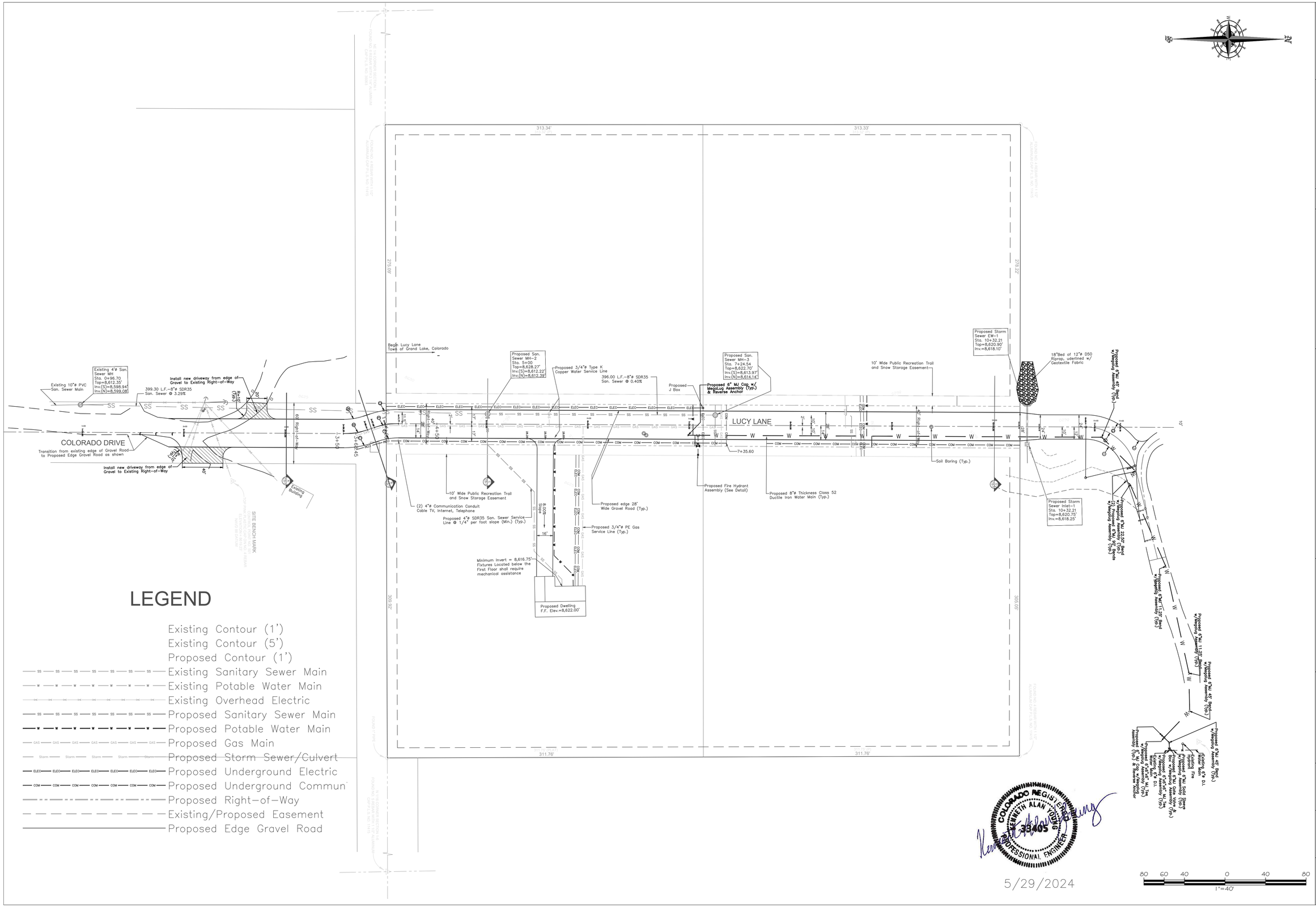

NO.	REVISION	APPV'D	DATE
1	Utilities		5/28/24
2	Utilities		5/29/24
3			
4			

Lucy Lane
Plan View
Proposed Utility Installations

DESIGNED BY	KAY
DRAWN BY	KAY/GH
CHECKED BY	JAJ
PROJECT NUMBER	23-9538

Jesik
800 W. 8th Street
Pueblo, Colorado 81003
(719) 582-5588
WWW.JESIK.US

DATE
5/29/24

SCALE
HORZ :1"=40'
VERT : –

SHEET
U–1

SHEET OF

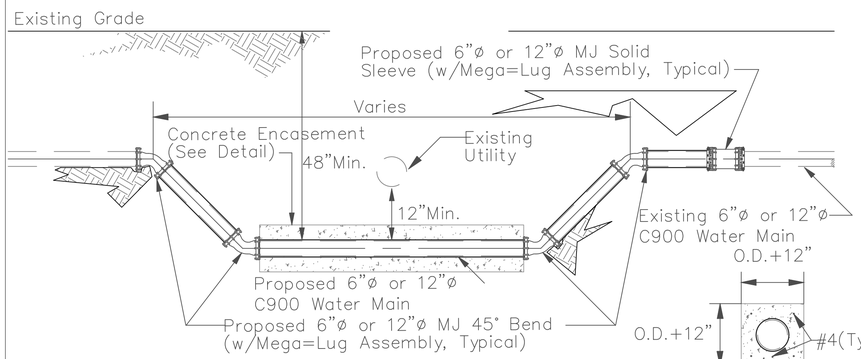

WATER MAIN LOWERING DETAIL
Scale: 1"=2'

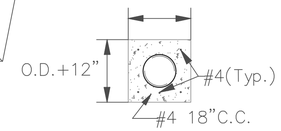

CONCRETE ENCASEMENT DETA
Scale: 1"=2'

5/28/2024

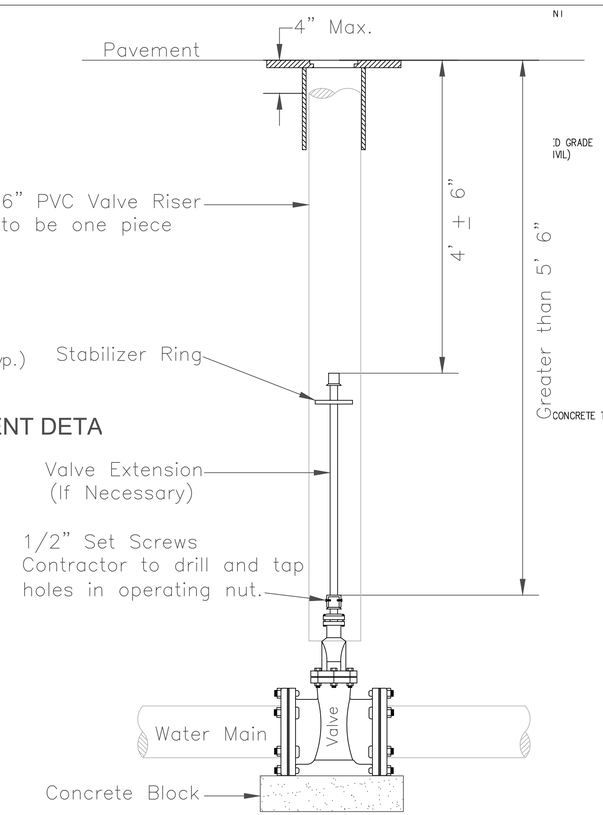

Valve Installation Detail
NOT TO SCALE

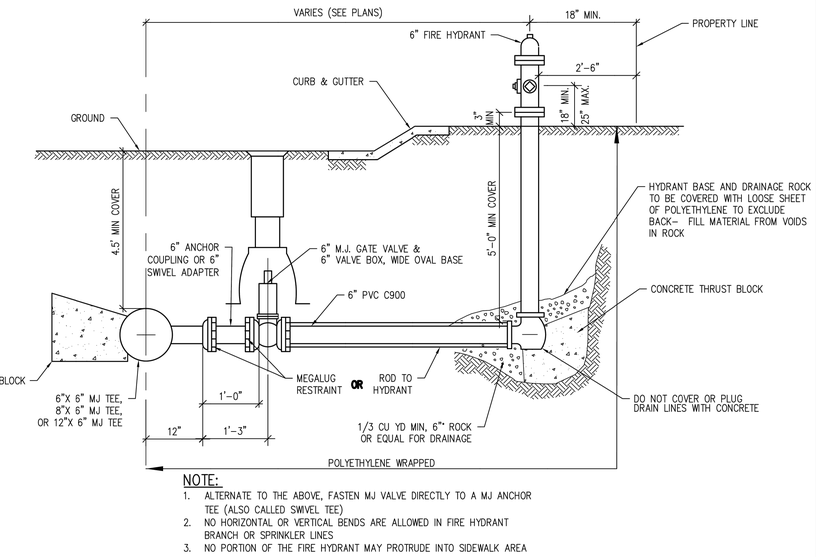

NOTE:
1. ALTERNATE TO THE ABOVE, FASTEN MJ VALVE DIRECTLY TO A MJ ANCHOR TEE (ALSO CALLED SWIVEL TEE)
2. NO HORIZONTAL OR VERTICAL BENDS ARE ALLOWED IN FIRE HYDRANT BRANCH OR SPRINKLER LINES
3. NO PORTION OF THE FIRE HYDRANT MAY PROTRUDE INTO SIDEWALK AREA

Fire Hydrant Assembly Detail
Not to Scale

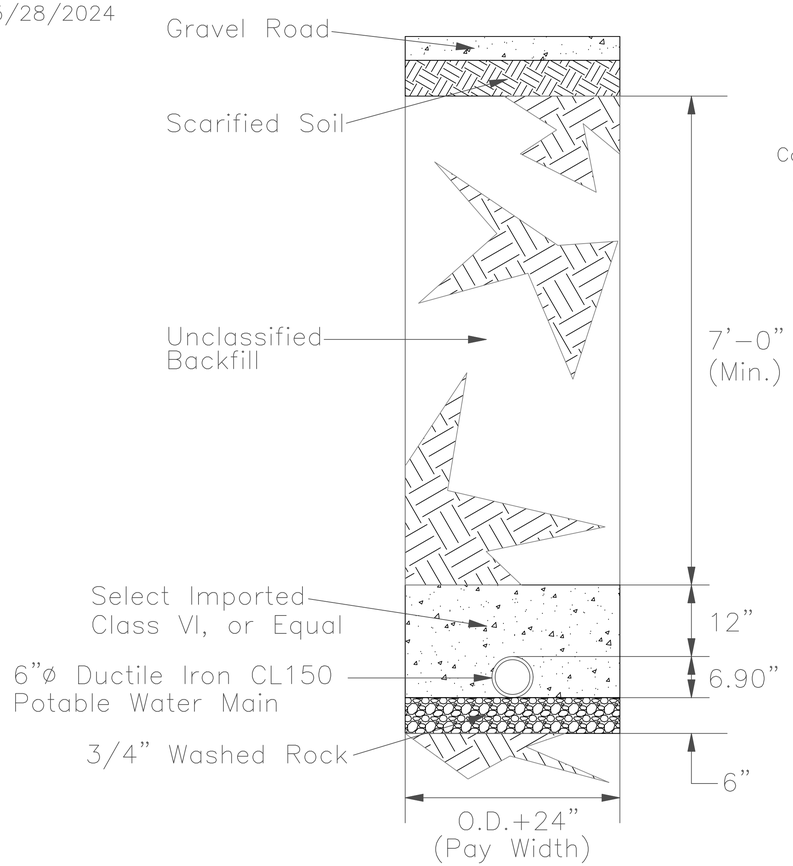

Potable Water Main Trench Detail
Scale: 1"=1'-0"

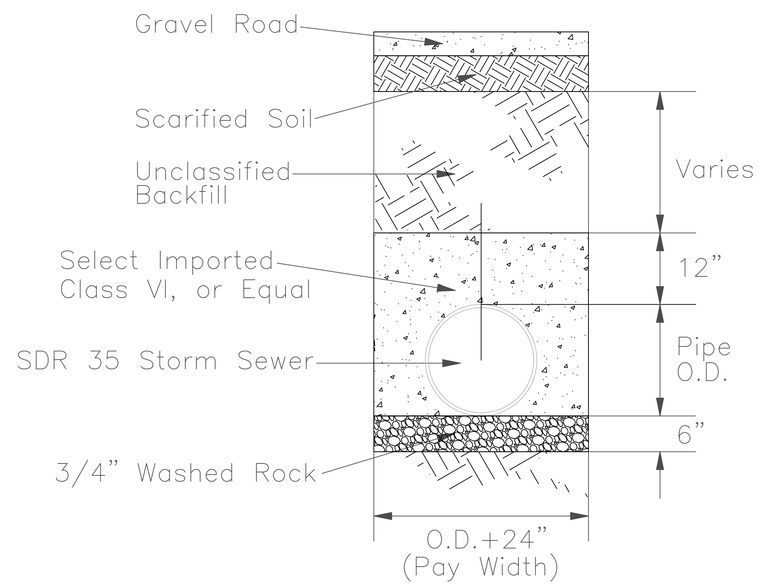

Storm Sewer Main Trench Detail
Scale: 1"=1'-0"

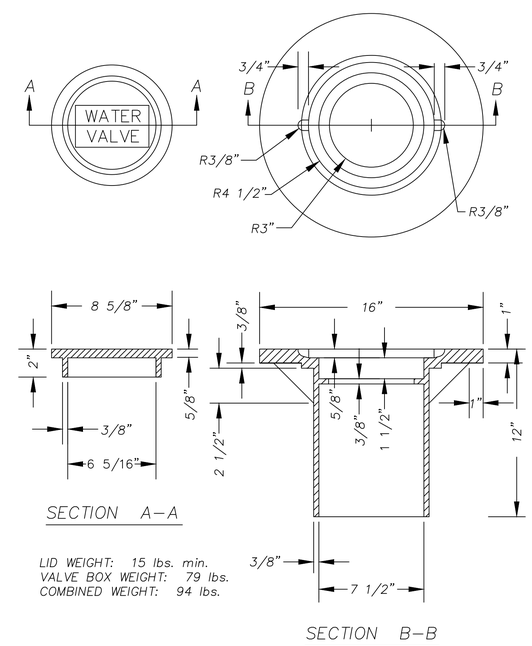

Valve Box Lid Detail
NOT TO SCALE

NO.	REVISION	APPV'D	DATE
1	Util Xing	2/5/24	
2	Utilities	5/28/24	
3			
4			

Lucy Lane

Details

DESIGNED BY KAY
DRAWN BY KAY/GH
CHECKED BY JAJ
PROJECT NUMBER 23-9538

Jesik
800 W. 8th Street
Pueblo, Colorado 81003
(719) 582-5588
WWW.JESIK.US

DATE 5/28/24

SCALE
HORZ : As Shown
VERT : -

SHEET D-1
SHEET OF

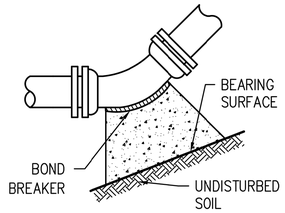

UPWARD BEND

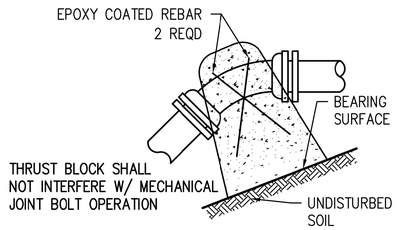

DOWNWARD BEND

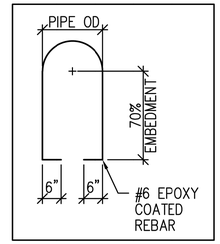

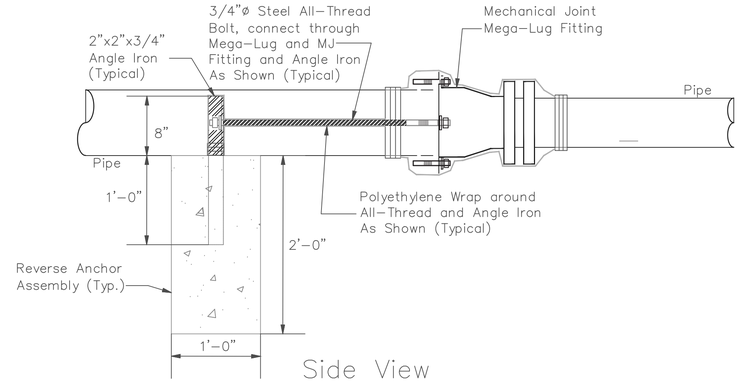

Side View

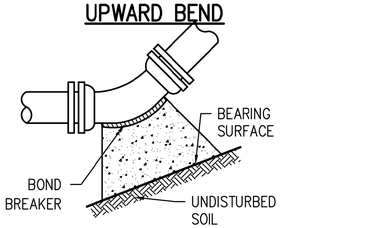

11-1/4°, 22-1/2°, 45° & 90° BENDS

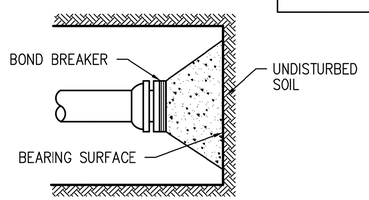

DEAD END

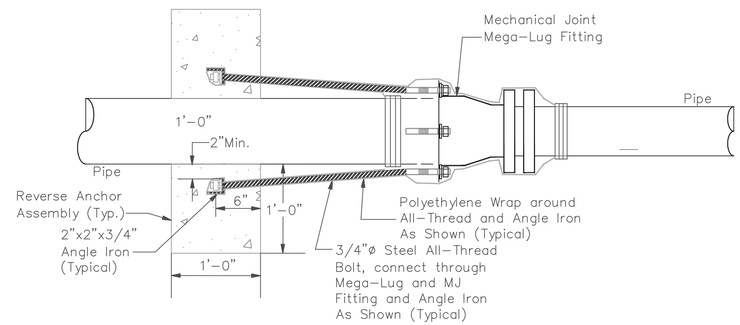

Plan View

REVERSE ANCHOR ASSEMBLY DETAIL

Not to Scale

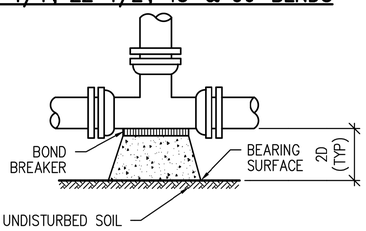

TEE

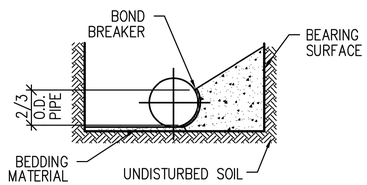

TYPICAL CROSS SECTION

NOTES:

1. BEARING SURFACES SHOWN IN CHART ARE MINIMUM SQUARE FEET
2. BASED ON 150 PSI INTERNAL PIPE PRESSURE PLUS WATER HAMMER.
   4", 6", 8", & 12" WATER HAMMER = 110 PSI
3. BASED ON 3000psf SOIL BEARING CAPACITY
4. USE TYPE II PORTLAND CEMENT 3000 PSI CONCRETE
5. ALL VALVES, TEES, BENDS AND PLUGS SHALL BE RESTRAINED AND THRUST BLOCKED

SIZE OF PIPE	SURFACE AREA (SQ FT)					CONC VOL (CU YD)
	TEE OR DEAD END	BENDS				
		11-1/4°	22-1/2°	45°	90°	VERT 45°
4"	1.50	1.00	1.00	1.00	2.0	0.34
6"	3.00	1.00	1.25	2.25	4.5	0.71
8"	5.25	1.00	2.00	4.00	8.0	1.22
12"	11.25	2.25	4.50	8.75	17.0	1.83

MINIMUM BEARING SURFACE AREA (IN SQUARE FEET)

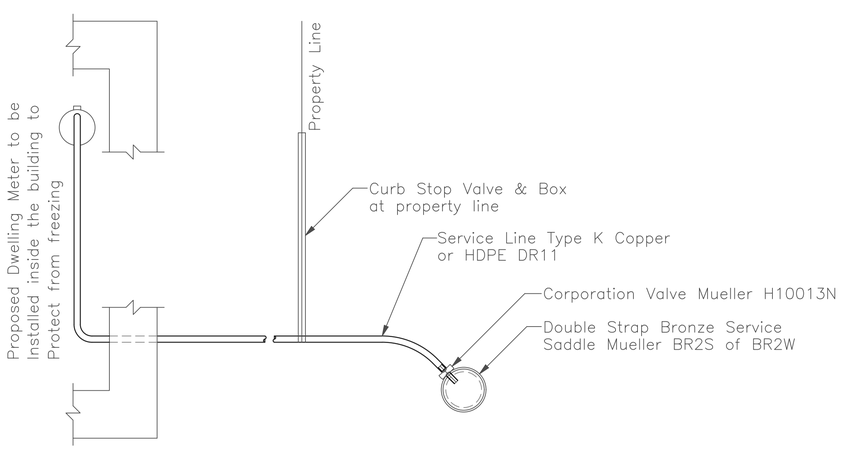

Service Tap/Meter Installation Detail

Not to Scale

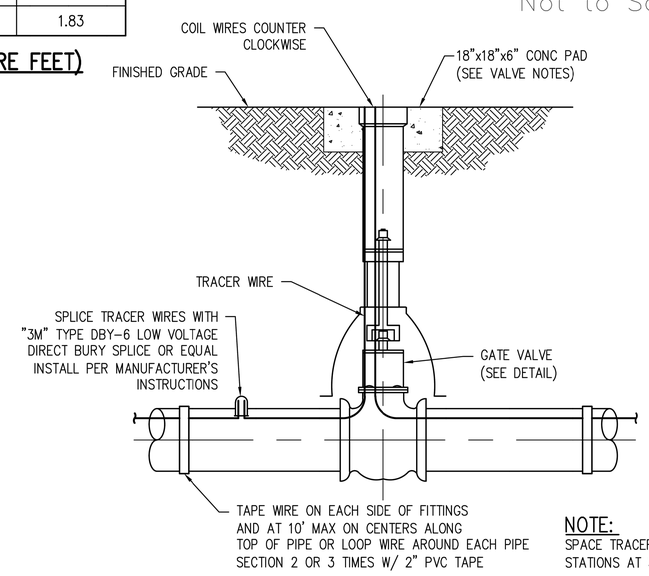

INSTALLATION AT VALVE

NOTE:
SPACE TRACER WIRE TEST STATIONS AT 500' MAX SPACING

TRACER WIRE INSTALLATION AND TEST STATION DETAIL (1)

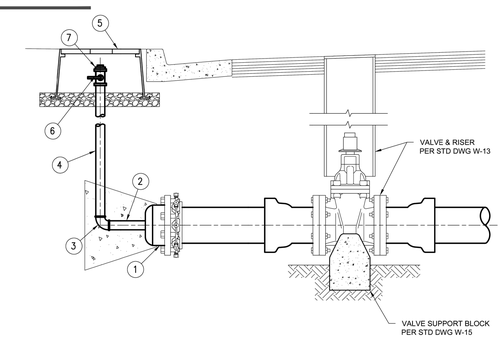

NOTES:

1. METER BOX FOR BALL VALVE TO BE LOCATED ADJACENT TO AND BEHIND CURB, UNLESS OTHERWISE NOTED ON PLANS.
2. IF END OF MAIN IS IN STREET, INSTALL 2" BRASS PIPE LEVEL TO BEHIND CURB. USE ADDITIONAL 2" 90° BRASS ELBOW.
3. WHEN BLOW-OFF IS LOCATED BEHIND A ROLLED CURB & GUTTER, OR WHERE NO CURB EXISTS USE TRAFFIC STYLE BOX AND LID.

ITEM	DESCRIPTION
1	MAIN x 2"MJ TAPPED END CAP
2	2" x 6" BRASS NIPPLE
3	2" 90° BRASS ELBOW
4	2" BRASS PIPE
5	METER BOX PER STANDARD DETAIL W-11
6	2" BALL VALVE PER APPROVED MATERIALS LIST
7	2" BRASS PLUG

Temporary Blow-Off Assembly

Not to Scale

COLORADO REGISTERED KENNETH ALAN YOUNG 33405 PROFESSIONAL ENGINEER

5/29/2024

NO.	REVISION	APPV'D DATE
1	BOA	2/5/24
2	Utilities	5/28/24
3	Curb Stop & Box	5/29/24
4		

Lucy Lane

Details

DESIGNED BY KAY
DRAWN BY KAY/GH
CHECKED BY JAJ
PROJECT NUMBER 23-9538

Jesik
800 W. 8th Street
Pueblo, Colorado 81003
(719) 582-5588
WWW.JESIK.US

DATE 5/29/24

SCALE
HORZ : As Shown
VERT : -

SHEET D-2

SHEET OF

SERVICE INSTALL REQUIREMENTS

Natural Gas and Electric Residential Service

Natural gas meters and regulators should be at least three feet (measured radially) from any source of ignition, such as electric switches and air-conditioning units. You must also maintain the 3-foot distance from doors, windows, vents and air intakes (6 feet from a mechanically induced air intake), outside water spigots and garage doors. In areas where city water is not available, the natural gas service line must be a minimum of 15 feet from a water well. Xcel Energy sets meters about six inches above final grade to allow slight changes in grade and landscaping around the meter without interfering with meter mechanisms. Note: Meters cannot be set under a deck or steps. The electric meter must be installed according to all electrical codes and applicable regulations. For joint trenching, both the natural gas and electric meter are preferred to be on the same side of the house.

DRAWING CR-10

CLEARANCE REQUIREMENTS FROM GAS METER

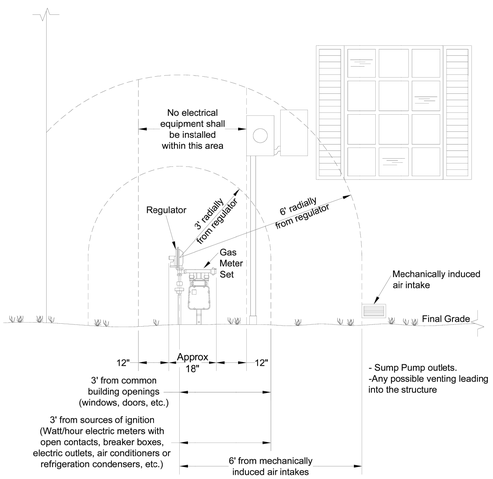

NOTES:
1. 3' minimum working clearance from non-electrical obstructions is preferred around gas meter set.
2. Disregard clearances when measuring around corners of structure.
3. See Sections 4.2.1(4), 4.3.1(3), and drawings SC-20, SC-20A, and SC-20B for ice and snow shield requirements.
4. Plastic gas services and electric services can be installed in the same joint trench; steel gas services are prohibited from joint trench installation with electric services. Also, gas and electric services shall have a minimum of 12" spacing, whether they are in the same trench or not

Xcel Energy	Issued	Replaces	Drawn by	Approved	File	STANDARD FOR ELECTRIC INSTALLATION AND USE
	Oct-21	Jan-19	DCP		I-7.1	PAGE I-7.1

Gas Service Meter Installation Detail 1

Not to Scale

DRAWING SC-20B

HEAVY SNOWFALL AND ICE LOADING METER REQUIREMENTS
OF MI AND CO COUNTIES: EAGLE, LAKE, PARK, AND SUMMIT

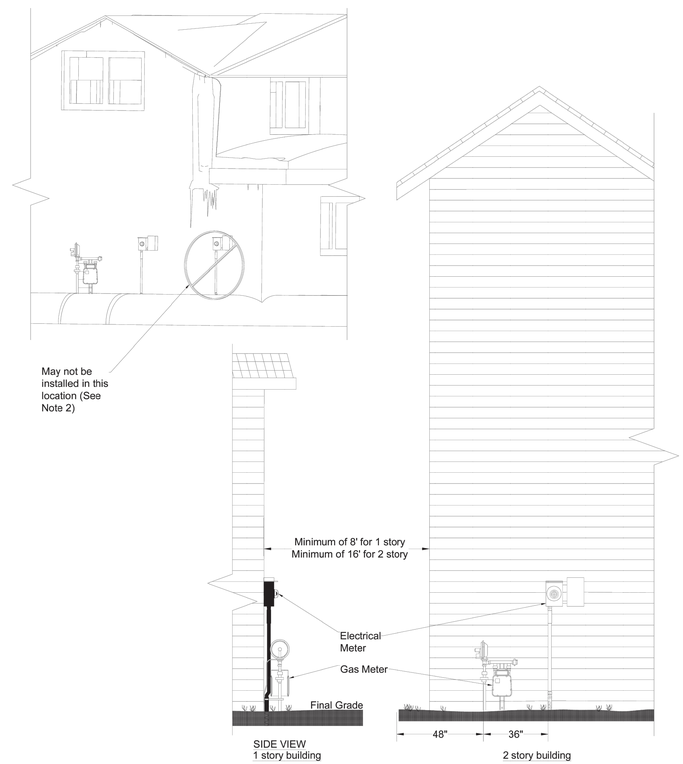

NOTES:
1. Customers of MI and CO counties: Eagle, Lake, Park, and Summit must comply with this page
2. There may be no adjacent drip side rooflines within 8' of meters for 1 story buildings and within 16' of 2 story buildings. Meters on the same building under the gable or non-drip side must be a minimum of 4' from the drip line.
3. Meters will not be set until the location is adequate and approved by Xcel Energy.
4. If installation of meters on the gable or non-drip side of the structure is impractical then the meter may be installed in a remote location with prior approval from meter dept needed for obtaining location for a remote set. For examples see SC-50 , SC-70, or SC-80
5. Meters in locations with heavy snowfall, ice loading or in locations above 6,000 feet elevation shall be located on the gable or non-drip side of a building or structure.

Xcel Energy	Issued	Replaces	Drawn by	Approved	File	STANDARD FOR ELECTRIC INSTALLATION AND USE
	Oct-21	NEW	DCP		I-1.5B	PAGE I-1.5B

Gas Service Meter Installation Detail 3

Not to Scale

DRAWING SC-20A

METER ICE AND SNOW SHIELD
(Hot Sequence Installation Shown)

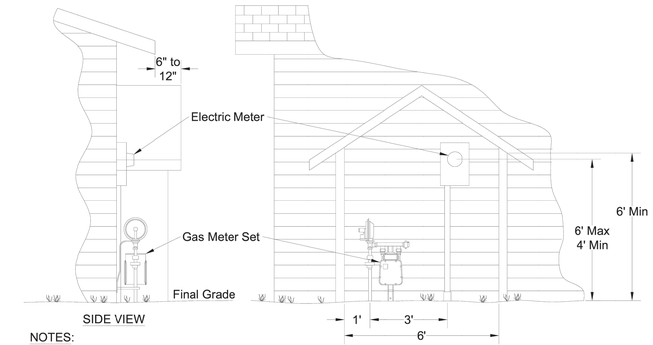

NOTES:
1. Required meter protection will consist of walls and gable roof which are structurally part of the building.
2. Walls will be 6' high and 6' apart.
3. Gable roof will extend a minimum of 6" beyond drip line (preferably 12").
4. Meters will not be set until meter protection is in place and approved by Xcel Energy.
5. Not allowed in the following MI and CO counties: Eagle, Lake, Park, and Summit.

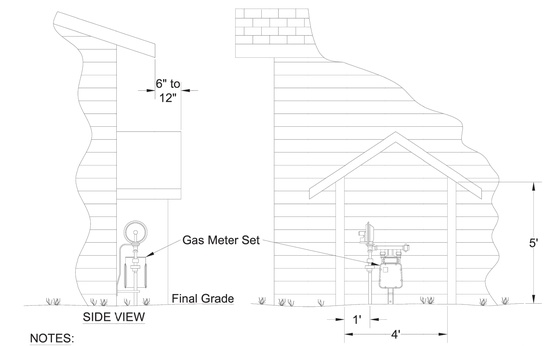

NOTES:
1. Required meter protection will consist of walls and gable roof which are structurally part of the building.
2. Walls will be 5' high and 4' apart.
3. Gable roof will extend a minimum of 6" beyond drip line (preferably 12").
4. Meters will not be set until meter protection is in place and approved by Xcel Energy.
5. Not allowed in the following MI and CO counties: Eagle, Lake, Park, and Summit.

Xcel Energy	Issued	Replaces	Drawn by	Approved	File	STANDARD FOR ELECTRIC INSTALLATION AND USE
	Oct-21	Jan-17	DCP		I-1.5A	PAGE I-1.5A

Gas Service Meter Installation Detail 2

Not to Scale

COLORADO REGISTERED KENNETH ALAN YOUNG 33405 PROFESSIONAL ENGINEER

5/28/2024

NO.	REVISION	APPV'D	DATE
1			
2			
3			
4			

Lucy Lane

Details

DESIGNED BY KAY
DRAWN BY KAY/GH
CHECKED BY JAJ
PROJECT NUMBER 23-9538

Jesik
800 W. 8th Street
Pueblo, Colorado 81003
(719) 582-5588
WWW.JESIK.US

DATE 5/28/24

SCALE
HORZ : As Shown
VERT : –

SHEET D-3

SHEET OF

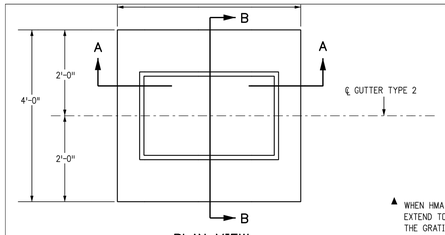

PLAN VIEW
TYPE 13 INLET FOR GUTTER TYPE 2

▲ WHEN HMA MATERIAL IS TO EXTEND TO THE EDGE OF THE GRATING FRAME, CONCRETE MAY BE DEPRESSED.

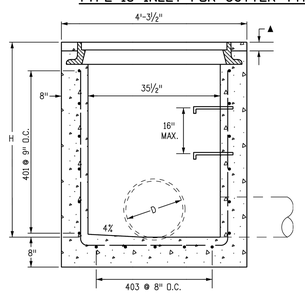

SECTION A-A
D MAX = 30 IN. FOR H > 4 FT.

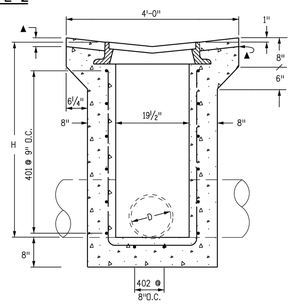

SECTION B-B
D MAX = 18 IN. FOR ALL H

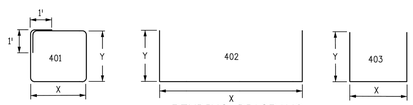

BENDING DIAGRAMS
ALL DIMENSIONS ARE OUT-TO-OUT OF BAR.

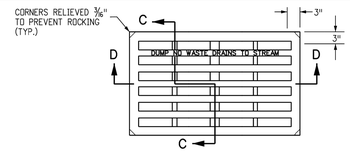

NO. 13 GRATE

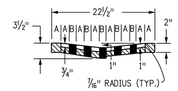

SECTION C-C

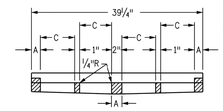

SECTION D-D

A = 1¾"
B = 1 11/16"
C = 7 15/16"

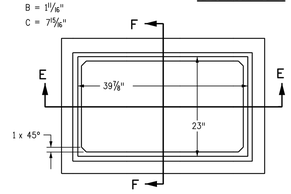

NO. 13 GRATING & FRAMES

GENERAL NOTES

1. CONCRETE SHALL BE CLASS B. INLET MAY BE CAST-IN-PLACE OR PRECAST.
2. CAST-IN-PLACE CONCRETE WALLS SHALL BE FORMED ON BOTH SIDES.
3. EXPOSED CONCRETE CORNERS SHALL BE CHAMFERED ¾ OF A INCH.
4. REINFORCING BARS SHALL BE DEFORMED #4 AND SHALL HAVE A 2 INCH MINIMUM CLEARANCE. ALL REINFORCING BARS SHALL BE GRADE 60 AND EPOXY COATED.
5. STEPS SHALL BE PROVIDED WHEN INLET DIMENSION "H" IS EQUAL TO OR GREATER THAN 3 FEET-6 INCHES AND SHALL CONFORM TO AASHTO M 199.
6. ALL GRATES AND FRAMES SHALL BE GRAY OR DUCTILE CAST IRON IN ACCORDANCE WITH SUBSECTION 712.06. GRATES AND FRAMES SHALL BE DESIGNED TO WITHSTAND HS 20 LOADING.
7. STATION POINT IS AT THE CENTER OF THE INLET.
8. GRATE SHALL HAVE "DUMP NO WASTE DRAINS TO STREAM" MESSAGE CAST ON SURFACE.

H	CONCRETE	REINFORCING STEEL	NO. OF 401 BARS REQ'D.	MAXIMUM PIPE I.D.	
				SEC. A-A	SEC. B-B
	CU. YDS.	θ LB.		IN.	IN.
3'-0"	1.3	72	4	18	18
3'-6"	1.5	76	4	24	18
4'-0"	1.6	90	5	30	18
4'-6"	1.8	104	6	30	18
5'-0"	1.9	109	6	30	18
5'-6"	2.1	122	7	30	18
6'-0"	2.2	136	8	30	18
6'-6"	2.4	141	8	30	18
7'-0"	2.5	154	9	30	18
7'-6"	2.7	168	10	30	18
8'-0"	2.8	173	10	30	18
8'-6"	3.0	187	11	30	18
9'-0"	3.1	200	12	30	18
9'-6"	3.3	205	12	30	18
10'-0"	3.4	219	13	30	18

θ INCLUDES 1% FOR OVERRUN.
NOTE: CONCRETE QUANTITIES INCLUDE VOLUME OCCUPIED BY PIPE.

QUANTITIES FOR ONE INLET

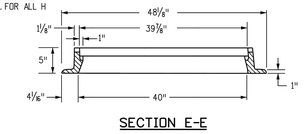

SECTION E-E
APPROXIMATE WEIGHT = 590 LBS.

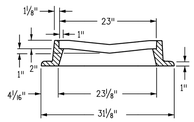

SECTION F-F

MARK	NO. REQ'D.	DIMENSIONS		LENGTH
		X	Y	
401	4	3'-6"	2'-2"	13'-4"
402	2	3'-4½"	* 2'-6½"	8'-5½"
403	5	2'-7½"	* 2'-7"	7'-2½"

* ADD 6 IN. TO THIS DIMENSION FOR EACH 6 IN. INCREASE OF "H" OVER 3 FT.-0 IN.

BAR LIST FOR H = 3 FT.-0 IN.

CDOT Type 13 Inlet Detail
Not to Scale

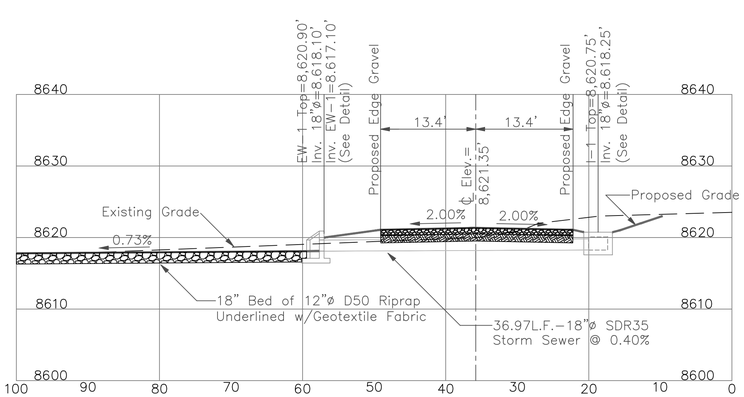

10+32.21

Profile Proposed Culvert
Horizontal Scale: 1"=10'
Vertical Scale: 1"=10'

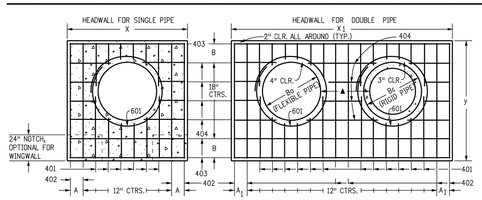

TYPICAL BAR LAYOUT FOR CONCRETE HEADWALLS

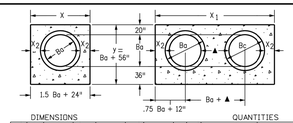

DIMENSIONS								QUANTITIES			
								CONCRETE		STEEL ■	
Bo IN.	Bc IN.	X FT.-IN.	A IN.	X1 FT.-IN.	A1 IN.	Y FT.-IN.	B IN.	X2	SGL. CU.YD.	DBL. CU.YD.	SGL. LBS.	DBL. LBS.
54	65	8-9	8½	15-6	7	9-2	17	20	2.12	3.55	209	364
60	72	9-6	7	17-0	10	9-8	11	21	2.35	3.99	236	414
66	79	10-3	11½	18-6	7	10-2	14	22	2.60	4.44	249	453
72	86	11-0	10	20-0	10	10-8	17	23	2.85	4.91	270	476
78	93	11-9	8½	21-3	11	11-2	11	24	3.11	5.29	306	527
84	100	12-6	7	22-6	7	11-8	14	25	3.38	5.68	333	572
90	107	13-3	11½	23-9	8½	12-2	17	26	3.66	6.08	335	593
96	114	14-0	10	25-0	10	12-8	11	27	3.94	6.48	379	649
102	121	14-9	8½	26-3	11½	13-2	14	28	4.24	6.89	400	664
108	128	15-6	7	27-6	7	13-8	17	29	4.54	7.30	424	707

HEADWALL FOR RIGID ROUND PIPE

GENERAL NOTES

1. CONCRETE SHALL BE CLASS B.
2. HEADWALL SHALL BE PERPENDICULAR TO THE PIPE ℄ UNLESS OTHERWISE SHOWN ON THE PLANS. TABULATED DIMENSIONS AND QUANTITIES MUST BE ADJUSTED FOR SKEWED INSTALLATIONS.
3. FOR WINGWALL DETAILS, SEE STANDARD PLAN M-601-20.
4. VOLUME OCCUPIED BY PIPE HAS BEEN DEDUCTED FROM STEEL AND CONCRETE QUANTITIES.
5. EXPOSED CONCRETE CORNERS SHALL BE CHAMFERED ¾ IN.
6. ALL REINFORCING BARS SHALL HAVE A 2 IN. MINIMUM CLEARANCE.

▲ WHEN TWO OR MORE PIPES ARE LAID SIDE BY SIDE, THEY SHALL BE PLACED SO THAT THE ADJACENT PIPES WILL BE ½ INSIDE DIAMETER APART, OR ½ INSIDE SPAN APART, OR 3 FT. APART (INCLUDING WALL THICKNESS), WHICHEVER IS LESS.

■ ADD 0.89 x (X OR X1) (LB.) WHEN APRON IS REQUIRED.

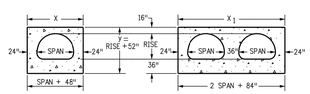

DIMENSIONS								QUANTITIES			
								CONCRETE		STEEL ■	
EQUIV. Bo IN.	SPAN IN.	RISE IN.	X FT.-IN.	A IN.	X1 FT.-IN.	A1 IN.	y FT.-IN.	B IN.	SGL. CU. YD.	DBL. CU. YD.	SGL. LBS.	DBL. LBS.
72	81	59	10-9	8½	20-6	7	9-3	17½	2.72	5.10	250	467
78	87	63	11-3	11½	21-6	7	9-7	10½	2.85	5.34	275	531
84	95	67	11-9	8½	22-10	9	9-11	12½	3.08	5.79	290	547
90	103	71	12-7	7½	24-2	11	10-3	15	3.30	6.21	321	591
96	112	75	13-4	12	25-8	8	10-7	16½	3.52	6.65	314	606
102	117	79	13-9	8½	26-6	7	10-11	9½	3.63	6.86	356	672
108	128	83	14-8	8	28-4	12	11-3	11½	3.96	7.51	376	699

HEADWALL FOR FLEXIBLE PIPE ARCH

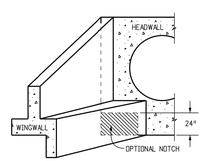

FRONT VIEW

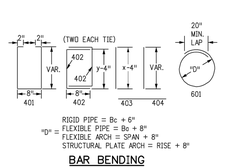

RIGID PIPE = Bc + 6"
"D" = FLEXIBLE PIPE = Bo + 8"
FLEXIBLE ARCH = SPAN + 8"
STRUCTURAL PLATE ARCH = RISE + 8"

BAR BENDING

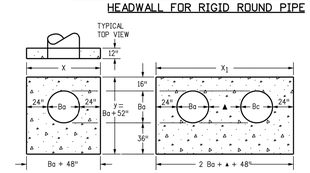

DIMENSIONS								QUANTITIES			
								CONCRETE		STEEL ■	
Bo IN.	X FT.-IN.	A IN.	X1 FT.-IN.	A1 IN.	y FT.-IN.	B IN.		SGL. CU. YD.	DBL. CU. YD.	SGL. LBS.	DBL. LBS.
54	8-6	7	15-3	11½	8-10	15		2.19	3.81	211	358
60	9-0	10	16-6	7	9-4	18		2.38	4.25	217	396
66	9-6	7	17-9	8½	9-10	12		2.58	4.70	252	454
72	10-0	10	19-0	10	10-4	15		2.78	5.17	255	472
78	10-6	7	20-0	10	10-10	18		2.98	5.56	276	499
84	11-0	10	21-0	10	11-4	12		3.19	5.95	297	553
90	11-6	7	22-0	10	11-10	15		3.40	6.36	317	517
96	12-0	10	23-0	10	12-4	18		3.62	6.79	321	597
102	12-6	7	24-0	10	12-10	12		3.84	7.21	364	663
108	13-0	10	25-0	10	13-4	15		4.06	7.63	362	678

HEADWALL FOR FLEXIBLE ROUND PIPE

DIMENSIONS								QUANTITIES			
								CONCRETE		STEEL ■	
EQUIV. Bo IN.	SPAN FT.-IN.	RISE FT.-IN.	X FT.-IN.	A IN.	X1 FT.-IN.	A1 IN.	y FT.-IN.	B IN.	SGL. CU. YD.	DBL. CU. YD.	SGL. LBS.	DBL. LBS.
66	6-1	4-7	10-1	10½	19-2	11	8-11	15½	2.52	4.70	232	424
75	7-0	5-1	11-0	10	21-0	10	9-5	9½	2.80	5.25	282	509
84	7-11	5-7	11-11	9½	22-10	9	9-11	12½	3.08	5.79	291	540
93	8-10	6-1	12-10	9	24-8	8	10-5	15½	3.36	6.33	309	622
102	9-9	6-7	13-9	8½	26-6	7	10-11	9½	3.63	6.86	379	673
111	10-11	7-1	14-11	9½	28-10	9	11-5	12½	4.05	7.67	377	711
120	11-10	7-7	15-10	9	30-8	8	11-11	15½	4.36	8.28	395	731
132	12-10	8-4	16-10	9	32-8	8	12-8	11	4.75	9.03	441	839
141	14-1	8-9	18-1	10½	35-2	11	13-1	13½	5.17	9.86	448	931
150	15-4	9-3	19-4	12	37-8	8	13-7	16½	5.69	10.88	490	953
159	15-10	9-10	19-10	9	38-8	8	14-2	11	5.89	11.25	534	1019

HEADWALL FOR STRUCTURAL PLATE ARCH

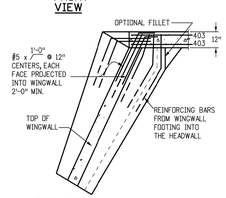

TOP VIEW
WINGWALL CONNECTION

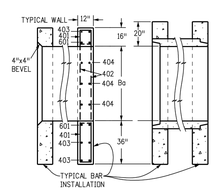

INLET OUTLET
ENDS OF FLEXIBLE PIPE

INLET OUTLET
ENDS OF RIGID PIPE

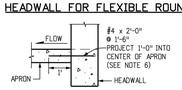

WHEN APRON IS REQUIRED

SKEW ANGLE A°	90	85	80	75	70	65	60	55	50	45	40	35	30
FACTOR (cosecA²)	1.000	1.004	1.015	1.035	1.064	1.103	1.155	1.221	1.305	1.414	1.556	1.743	2.000

SKEW FACTOR TABLE

CDOT D-W Headwall/Endwall Detail
Not to Scale

5/29/2024

NO.	REVISION	APPV'D	DATE
1	Utilities		5/29/24
2			
3			
4			

Lucy Lane

Details

DESIGNED BY KAY
DRAWN BY KAY/GH
CHECKED BY JAJ
PROJECT NUMBER 23-9538

Jesik
800 W. 8th Street
Pueblo, Colorado 81003
(719) 582-5588
WWW.JESIK.US

DATE 5/29/24

SCALE
HORZ : As Shown
VERT : –

SHEET D-4

SHEET OF

UTILITIES

A. The lines shown on the drawings indicating existing lines and new lines, are not to be construed as the exact location of said lines, or in fact all lines that may exist. The Contractor is responsible for verifying the final location and depth of any lines affecting the project work.

B. The Contractor shall provide, at his own expense, all necessary utilities required for his operations under the contract. The Contractor shall provide and maintain in good order such equipment and installations to perform the work in a safe and satisfactory manner.

C. Water lines, gas lines, wire lines, service connections, meter and valve boxes, light standards, cableways, and all other utility facilities within the limits of the proposed construction are to be relocated or adjusted at the Owner's expense unless otherwise provided in the Contract.

D. If utility facilities or appurtenances are found that are neither identified in the Contract, nor revealed by site investigation, the Owner will determine whether adjustment or relocation of the utility is necessary. The Engineer will make arrangements with either the utility owner or the Contractor to accomplish necessary adjustments or relocations when not otherwise provided for in the Contract

E. Where the Contractor's operations are adjacent to properties of telephone, power, or other utility companies, to which damage might result in considerable expense, loss, or inconvenience, work shall not commence until arrangements for the protection of the utilities have been made.

F. If water or utility services are interrupted, the Contractor shall promptly notify the Owner and shall cooperate in the restoration of service. Repair work shall be continuous until the service is restored. Work shall not be undertaken around fire hydrants until the provisions for continued service have been approved by the local fire authority. The Owner's contact is: Office: (970) 627-3435, Matt Reed-Tolonen (Public Works Director): (970) 531-9594.

G. The Contractor shall comply with Article 1.5 of Title 9, CRS ("Excavation Requirements") when excavating or grading is planned in the area of underground utility facilities. The Contractor shall notify all affected utilities at least two (2) business days prior to commencing such operations. Contact the Utility Notification Center of Colorado (UNCC) (811) to have locations of UNCC registered lines marked by member companies. All other underground facilities shall be located by contacting the respective company. Utility service laterals shall also be located prior to beginning excavation or grading.

CONSTRUCTION

A. The lines shown on the drawings are proposed improvements, finished grades for structures, profile and details of the work. Any modification must be approved by the Project Engineer (Either Kenneth Young (719) 568-2074, Email: Ken@jesik.us, or Andy Jesik (719) 582-5588, Email: andy@jesik.us).

B. All items which are to be demolished, shall become the property of the Contractor, and shall be immediately removed.

C. All disturbed areas shall be permanently stabilized with a native seed mixture. The Contractor shall submit same to the Project Engineer for approval.

D. The Contractor shall implement all erosion control features as soon as the upstream area is disturbed.

E. The Contractor shall submit to the Owner a comprehensive Construction Schedule, prior to the commencement of any construction activity. The Engineer shall review, said Schedule and either request modification, or approve without exception. Once the Notice to Proceed is executed and the Construction Schedule is approved, the Contractor may commence with construction activities. Any deviations to the approved Construction Schedule shall require written approval by the Engineer.

F. The Contractor shall notify the Owner immediately, in writing, of any potential errors, omisions or confilcting information contained on the Plans or Contract Documents.

G. All Change Orders initiated by the Contractor, shall be submitted to the Owner, in writing, including supporting documentation. Prior Approval is required before commencement of altered or added work.

H. The sanitary sewer service lines shall tie into the proposed sanitary sewer manholes, as shown on the plans.

I. All other utility services shall be extended to the RIght-of-Way line and terminated as shown on the plans. It shall be the responsibility of the Individual Lot Owner to connect to the utility service lines.

J. Pressure and Leak Testing of Proposed Water Main:

1. The Contractor shall fill and flush the pipeline prior to pressure and leakage testing and disinfection of the water system. The lines shall be filled by the Onwer's representative or the the Contractor under the supervision of the Owner's representative.
2. The lines shall be filled slowly to prevent entrapping air. The lines shall then be flushed at blowoffs or hydrants. Valves shall be opened and closed slowly to prevent surges while maintaining positive pressure in the system at all times. Disposal of the water flushed from the pipeline shall not cause erosion, a nuisance or disrupt traffic.
3. The Contractor will be required to perform a pressure and leakage test of water mains, valves, and fittings in the constructed system (not service lines 2 inches in diameter or less). Where any section of the main is provided with concrete thrust blocks, the test shall not be made until at least 5 days have elapsed after the concrete was placed. If high-early strength cement is used in the concrete thrust block, the test shall be made after 48 hours.
4. The Contractor shall utilize fire hydrant where available on the pipeline to conduct the tests. When necessary, additional taps into the pipeline may be required to perform the testing. The Contractor shall supply all required materials and equipment required for testing and additional tapping of the pipeline. The tests shall be conducted in the presence of the Owner or Owner's representative.
5. The pipeline segment to be tested (**NOT TO EXCEED 1,000 FEET IN LENGTH)** shall be isolated and approved by the Onwer. The pipeline or segment shall be filled with water and subjected to a pressure and leakage test with water as set forth in AWWA Standard C605. Each separate lateral shall be tested. Any excessive leakage, as determined by the Owner, shall be located and repairs made. Should the pipeline or segments tested exceed permissible leakage limits, the Contractor shall excavate and locate the source of the leakage and make repairs. After the Contractor has notified the Owner that repairs have been made, the test shall be repeated until the pipeline or segment test results are within the specified limits.

K. Disinfection of the Proposed Water Main:

1. All mains, valves, hydrants, hydrant connections and other appurtenances installed under this Contract shall, upon completion of all water supply related construction be disinfected in accordance with AWWA Standard C651 and any additional requirements of the Owner. The water main shall be isolated from any existing in-service line to prevent any cross connections with the existing line.
2. The Contractor, under the supervision of the Owner, shall take water samples and have the samples tested by an approved laboratory. The samples shall be prepared, taken, stored in containers, and handled by the methods required by the testing laboratory standards. If initial testing is unsatisfactory with the health department standards or as determined by the Owner, the Contractor shall disinfect and retest the water main. This procedure shall be repeated until satisfactory results are obtained at the Contractor's expense. **NO PORTION OF THE WATER MAIN SHALL BE TAPPED FOR SERVICE UNTIL THE LINE HAS BEEN INSPECTED, DISINFECTED AND ACCEPTED.**
3. The Owner will furnish water to the Contractor at no cost for flushing, testing, and disinfecting the pipeline, if hydrants or other connections are convenient to the work. Otherwise, the Contractor shall be responsible for securing a water supply acceptable to the Owner, at no additional cost. The wasteful use of furnished water will not be allowed.
4. Mains shall be drained the hydrants, blowoffs and air vents.
5. Hydrants or blowoffs shall not be connected to any sewer, submerged in any stream, or be installed in any other manner that will permit back siphonage into the distribution system. The discharge and disposal of water used for disinfection shall comply with all state and federal requirements.

NO.	REVISION	APPV'D	DATE
1			
2			
3			
4			

COLORADO REGISTERED PROFESSIONAL ENGINEER KENNETH ALAN YOUNG 38405 5/29/2024

LUCY LANE

PLAN NOTES

DESIGNED BY KAY
DRAWN BY KAY
CHECKED BY AJ
PROJECT NUMBER 23-9538

800 W. 8th Street
Pueblo, Colorado 81003
(719) 582-5588
WWW.JESIK.US

DATE 5/29/2024

SCALE
HORZ :
VERT :

SHEET N-1

SHEET OF