WAREHOUSE METAL BUILDING

FOR

MIKE REEVES

ENERGY COVE COURT, GREEN COVE SPRINGS, FL 32043

CLAY COUNTY

PROJECT OWNER AND CONSULTANTS

OWNER: Mr. Mike Reeves
80893 Soria Ravines Rd.
170 College Drive Suite 1
Orange Park, FL 32065
Email: Mireeves3@yahoo.com

SURVEYOR: Eiland & Associates, Inc.
615 Blanding Boulevard
Orange Park, FL 32065
TEL: (904) 272-1000

ENGINEER: Tocoi Engineering, LLC
John J. Mahoney III, P.E.
714 North Orange Avenue
Green Cove Springs, FL 32043
TEL: 904-215-1388

LOCATION MAP
N.T.S.

INDEX OF DRAWINGS

1	COVER SHEET
2	GENERAL NOTES
3	EXISTING GROUND
4	DEMOLITION PLAN
5	EXISTING DRAINAGE
6	PROPOSED DRAINAGE
7	GEOMETRY PLAN
8	GRADING & DRAINAGE PLAN
9	EROSION CONTROL DETAILS
10	UTILITY PLAN
11	UTILITY DETAILS
12	PHOTOMETRIC PLAN
13	MISCELLANEOUS DETAILS
14	SWPPP CONTRACTOR REQUIREMENTS
15	SWPPP CONTRACTOR CERTIFICATION
16	FIRE SUPPRESSION PLAN
LS-1 LS-2	LANDSCAPE PLAN

B&W JOB NO: 2500020.00
TE JOB NO: 23-627
CLIENT CODE: MCCRI

SAFETY IS IN YOUR HANDS. EVERY DIG. EVERY TIME.

CALL BEFORE YOU DIG
800-432-4770

TOCOI Engineering
a BAXTER & WOODMAN company

714 NORTH ORANGE AVENUE, GREEN COVE SPRINGS, FL 32043
TEL: 815-459-1260 E.B. NUMBER: 26383

PERMIT PLANS
MAY 29, 2025

JOHN J. MAHONEY III, P.E.
FLA. REGISTERED ENGINEER, #40177

Date: 6/2/25 Time: 4:16 PM DWG Name: \\TE-GCS\01-Projects\2500020-Energy Cove Metal Buildings - MCCRI\03-CADD\01_23-627 COVER SHEET - CLAY.dwg Layout: 1

GENERAL NOTES:

1. ALL WORK AND MATERIALS SHALL BE IN COMPLETE ACCORDANCE WITH ALL RELATIVE SECTIONS OF THE CITY OF GREEN COVE SPRINGS (G.C.S.) & GREEN COVE SPRINGS PUBLIC WORKS (G.C.S.P.W.) STANDARDS, (LATEST REVISION) AND ALL CURRENT CITY & G.C.S.P.W. DETAILS AS WELL AS ALL APPLICABLE STATE AND LOCAL REGULATIONS. THE WORK SHALL ALSO BE PERFORMED AND TESTED IN ACCORDANCE WITH THE RECOMMENDATIONS SET FORTH IN THE GEOTECHNICAL INVESTIGATION REPORT PROVIDED BY XXXXXXX XXXXXXX PROJECT No. XXXXXXXX. IF MORE STRINGENT THAN CITY OF G.C.S. REQUIREMENTS.

2. ALL WORK SHALL BE PERFORMED IN A SAFE MANNER. ALL SAFETY RULES AND GUIDELINES OF O.S.H.A. SHALL BE FOLLOWED. THE CONTRACTOR SHALL BE WHOLLY RESPONSIBLE FOR ANY INJURIES OF HIS EMPLOYEES, AND ANY DAMAGE TO PRIVATE PROPERTY OR PERSONS DURING THE COURSE OF THIS PROJECT. ALL COSTS ASSOCIATED WITH COMPLYING WITH O.S.H.A. REGULATIONS AND THE FLORIDA TRENCH SAFETY ACT MUST BE INCLUDED IN THE CONTRACTORS BID.

3. THE CONTRACTOR SHALL BE RESPONSIBLE FOR VISITING THE JOB SITE PRIOR TO PREPARING THE BID FOR THE PURPOSE OF FAMILIARIZING HIMSELF WITH THE NATURE AND THE EXTENT OF THE WORK AND LOCAL CONDITIONS, EITHER SURFACE OR SUBSURFACE, WHICH MAY AFFECT THE WORK TO BE PERFORMED, AND THE EQUIPMENT, LABOR AND MATERIALS REQUIRED. FAILURE TO DO SO WILL NOT RELIEVE THE CONTRACTOR OF COMPLETE PERFORMANCE UNDER THIS CONTRACT. THE CONTRACTOR IS ALSO URGED TO TAKE COLOR PHOTOGRAPHS ALONG THE ROUTE OF THE PROJECT TO RECORD EXISTING CONDITIONS PRIOR TO CONSTRUCTION, AND TO AID IN RESOLVING POSSIBLE FUTURE COMPLAINTS THAT MAY OCCUR DUE TO THE CONSTRUCTION OF THE PROJECT.

4. IT SHALL BE THE CONTRACTOR'S RESPONSIBILITY TO EITHER CONDUCT ANY FIELD EXPLORATION OR ACQUIRE ANY GEOTECHNICAL ASSISTANCE REQUIRED TO ESTIMATE THE AMOUNT OF UNSUITABLE MATERIAL THAT WILL REQUIRE REMOVAL AND/OR TO ESTIMATE THE AMOUNT OF OFF SITE BORROW THAT WILL BE REQUIRED.

5. ALL IMPROVEMENTS SHOWN ARE TO BE WARRANTED BY THE CONTRACTOR TO THE DEVELOPER AND CITY OF G.C.S. FOR A PERIOD OF ONE YEAR FROM DATE OF ACCEPTANCE BY THE OWNER AND CITY OF G.C.S..

6. ELEVATIONS ARE BASED ON NATIONAL GEODETIC VERTICAL DATUM OF 1929 (N.G.V.D.) UNITED STATES COASTAL AND GEODETIC SURVEY (U.S.C. & G.S.), AS DETERMINED BY EILAND AND ASSOCIATES, INC.

7. FOR BOUNDARY, ROADWAY AND LOT GEOMETRY INFORMATION SEE PLAT.

8. THE CONTRACTOR WILL CONTRACT WITH AN INDEPENDENT TESTING LABORATORY TO PERFORM MATERIAL TESTING AND SOIL TESTING IN ACCORDANCE WITH CITY OF G.C.S. AND/OR G.C.S.P.W. REQUIREMENTS. THIS SHALL INCLUDE DENSITY TESTS IN ALL PAVEMENT AREAS AND IN ALL UTILITY TRENCHES LOCATED IN PAVEMENT AREAS CONCRETE TESTING AND ALL OTHER MATERIAL TESTING. PRIOR TO LIMEROCK PLACEMENT, THE PROJECT GEOTECHNICAL ENGINEER SHALL MAKE RECOMMENDATION FOR UNDER DRAIN PLACEMENT.

9. THE CONTRACTOR SHALL BE RESPONSIBLE FOR OBTAINING ALL NECESSARY PERMITS AND INSURANCE REQUIRED FOR THE PROJECT INCLUDING CITY RIGHT-OF-WAY PERMITS FOR WORK IN CITY OF G.C.S. RIGHT-OF-WAY OR EASEMENT.

10. THE CONTRACTOR SHALL COORDINATE THE WORK WITHIN CITY OF G.C.S. OR STATE RIGHT-OF-WAY WITH THE PROPER AGENCIES FOR MAINTENANCE OF TRAFFIC AND METHOD OF CONSTRUCTION AND REPAIR.

11. ALL PUBLIC DRAINAGE EASEMENTS SHALL BE "UNOBSTRUCTED" EASEMENTS. ALL "UNOBSTRUCTED" EASEMENTS TO BE CLEAR AND DRIVEABLE.

12. "AS-BUILT" DRAWINGS – AS-BUILTS TO CITY OF G.C.S. AND THE ST. JOHNS RIVER WATER MANAGEMENT DISTRICT ARE REQUIRED TO BE SIGNED AND SEALED BY A FLORIDA REGISTERED LAND SURVEYOR THEREFORE, IT SHALL BE THE CONTRACTOR'S RESPONSIBILITY TO CONTRACT WITH A LAND SURVEYOR REGISTERED IN THE STATE OF FLORIDA FOR THE PREPARATION, FIELD LOCATIONS, CERTIFICATION AND SUBMITTAL OF "AS-BUILT" DRAWINGS IN ACCORDANCE WITH CURRENT CITY OF G.C.S. & G.C.S.P.W. STANDARDS AND SPECIFICATIONS AND SJRWMD REGULATIONS. IT IS THE CONTRACTOR'S RESPONSIBILITY TO PROCESS THE "AS-BUILT" DRAWINGS FOR APPROVAL BY CITY OF G.C.S..

13. THE CONTRACTOR SHALL COORDINATE THEIR CONSTRUCTION WITH ALL OTHER CONTRACTORS. IN THE EVENT OF ANY CONFLICT WHATSOEVER, THE CONTRACTOR SHALL NOTIFY THE ENGINEER AND OWNER PRIOR TO PROCEEDING WITH CONSTRUCTION.

14. ALL CLEARING AND GRUBBING REQUIRED FOR ALL ROADWAY, UTILITIES, DITCHES, AND BERMS INCLUDED IN THIS PROJECT AND THE CLEARING AND GRUBBING OF ALL RIGHT-OF-WAY OR EASEMENTS SHALL BE CONSIDERED AS PART OF THE PROJECT.

15. ALL AREAS SHOWN TO BE FILLED SHALL BE CLEARED AND GRUBBED IN ACCORDANCE WITH CITY OF G.C.S. STANDARDS AND SHALL BE FILLED WITH CLEAN STRUCTURAL FILL COMPACTED AND TESTED IN ACCORDANCE WITH THE GEOTECHNICAL INVESTIGATION REPORT.

16. CONTRACTOR IS RESPONSIBLE FOR PROTECTION OF ALL SURVEY AND PROPERTY MONUMENTS. IF A MONUMENT IS DISTURBED, THE CONTRACTOR SHALL CONTRACT WITH THE SURVEYOR OF RECORD FOR REINSTALLATION OF THE MONUMENT.

17. ALL DEBRIS RESULTING FROM ALL ACTIVITIES SHALL BE DISPOSED OF OFF-SITE BY CONTRACTOR.

18. ALL EXCESS SUITABLE AND UNSUITABLE MATERIAL SHALL BE REMOVED FROM THE SITE BY THE CONTRACTOR UNLESS DIRECTED OTHERWISE BY ENGINEER OR OWNER.

19. ALL EXISTING TREES TO REMAIN SHALL BE PRESERVED AND PROTECTED.

20. BURNING OF TREES, BRUSH AND OTHER MATERIAL SHALL BE APPROVED, PERMITTED AND COORDINATED WITH CITY OF G.C.S. FIRE MARSHAL.

21. ROADWAY UNDER DRAINS SHALL BE AS REQUIRED ON THE PLANS OR AS MAY BE DETERMINED NECESSARY BY THE GEOTECHNICAL ENGINEER DURING CONSTRUCTION. THE CONTRACTOR SHALL NOTIFY THE ENGINEER IF HIGH GROUND WATER CONDITIONS ARE PRESENT DURING THE PREPARATION OF THE ROADWAY SUB-BASE. CITY OF G.C.S. WILL RESERVE THE RIGHT TO REQUEST ADDITIONAL UNDER DRAIN AS DEEMED NECESSARY.

22. CONTRACTOR SHALL PROVIDE CONTRACTION JOINTS AT 10' INTERVALS AND EXPANSION JOINTS SHALL BE CONSTRUCTED AT 50' INTERVALS AND AT ALL RADIUS POINTS ON ALL CURBING.

23. CONTRACTOR SHALL PROVIDE EXPANSION JOINTS AT 18' INTERVALS AND CONTRACTION JOINTS SHALL BE SPACED AT 6' INTERVALS BETWEEN EXPANSION JOINTS.

24. MAINTENANCE OF TRAFFIC SHALL CONFORM TO F.D.O.T. STANDARD INDEX 600, LATEST EDITION.

25. ALL SIGNING AND PAVEMENT MARKINGS SHALL BE IN ACCORDANCE WITH F.D.O.T. STANDARD INDEXES 11860, 17346, AND 17352.

26. WHERE RCP IS CALLED OUT IN THE PLANS CONTRACTOR MAY SPECIFY RCP, OR HDPE FOR APPROVAL BY ENGINEER OF RECORD.

27. ALL EXISTING PAVEMENT MARKINGS THAT CONFLICT WITH THE PROPOSED ROADWAY/SITE DEVELOPMENT SHALL BE REMOVED BY THE CONTRACTOR UTILIZING THE HYDRO-BLASTING METHOD.

UTILITY NOTES:

1. THE LOCATION OF ALL EXISTING UTILITIES, STRUCTURES AND IMPROVEMENTS SHOWN ON THE DRAWINGS IS BASED ON LIMITED INFORMATION AND MAY NOT HAVE BEEN VERIFIED. THE LOCATIONS ARE APPROXIMATE. THE CONTRACTOR SHALL NOTIFY RESPECTIVE UTILITY OWNERS AND FIELD VERIFY LOCATIONS OF EXISTING UTILITIES AND OTHER IMPROVEMENTS PRIOR TO COMMENCING ANY CONSTRUCTION. IF THE LOCATIONS SHOWN ARE CONTRARY TO THE ACTUAL LOCATIONS, THE CONTRACTOR SHALL NOTIFY THE OWNER AND ENGINEER OF THE DISCREPANCY. THIS DISCREPANCY SHOULD BE RESOLVED PRIOR TO COMMENCING CONSTRUCTION. THE CONTRACTOR SHALL EXERCISE EXTREME CAUTION WHEN WORKING IN AREAS NEAR EXISTING UTILITIES AND IMPROVEMENTS AND SHALL BE RESPONSIBLE FOR AND SHALL REPAIR OR PAY FOR ALL DAMAGE MADE TO EXISTING UTILITIES OR OTHER IMPROVEMENTS. PRIOR TO COMMENCEMENT OF ANY CONSTRUCTION, THE CONTRACTOR SHALL VERIFY ALL GRADES, INVERTS AND TYPE OF MATERIAL OF EXISTING UTILITIES TO WHICH HE SHALL CONNECT.

2. THE CONTRACTOR SHALL SUBMIT SHOP DRAWINGS ON ALL MATERIALS, IF REQUIRED, TO THE ENGINEER FOR REVIEW AND APPROVAL, PRIOR TO SUBMITTAL TO CITY OF G.C.S. & G.C.S.P.W., AND PRIOR TO PURCHASE OR CONSTRUCTION OF ANY UTILITY PIPE OR STRUCTURE.

3. ALL PIPE LENGTHS ARE SCALED DIMENSIONS. ALL DRAINAGE STRUCTURES SHALL BE CONSTRUCTED TO CONFORM WITH CITY OF G.C.S. REQUIREMENTS AND SHALL BE CONSTRUCTED TO CONFORM WITH CURBING, PROPERTY LINES AND LOW POINTS AS SHOWN ON THE PLANS.

4. CONTRACTOR SHALL INSURE THAT ALL DRAINAGE STRUCTURES, PIPES, ETC. ARE CLEAN AND FUNCTIONING PROPERLY AT TIME OF ACCEPTANCE.

5. ALL DRAINAGE STRUCTURES TO HAVE TRAFFIC BEARING GRATES.

6. ALL DRAINAGE PIPE JOINTS IN CITY OF G.C.S. DRAINAGE EASEMENTS, DRAINAGE EASEMENTS BETWEEN PRIVATE LOTS, DRAINAGE RIGHT-OF-WAYS AND UNDER PAVED ROADS ARE TO BE FILTER-WRAPPED.

7. ALL INVERTS IN DRAINAGE STRUCTURES TO BE PRE CAST OR BRICK WITH LAYER OF MORTAR BETWEEN EACH LAYER OF BRICK, OR REDDI-MIX CONCRETE WITH #57 STONE.

8. UNSUITABLE MATERIALS UNDER WATER, SEWER PIPE, STORM PIPE OR STRUCTURES SHALL BE REMOVED AND REPLACED WITH SELECTED BACKFILL, PROPERLY COMPACTED.

9. ALL UNDERGROUND UTILITIES MUST BE INSTALLED PRIOR TO PREPARATION OF SUB GRADE FOR PAVEMENT.

10. ALL WATER AND SEWER CONSTRUCTION WITHIN CITY OF G.C.S. SHALL BE ACCOMPLISHED BY AN UNDERGROUND UTILITY CONTRACTOR LICENSED UNDER THE PROVISIONS OF CHAPTER 489 FLORIDA STATUTES.

11. CONTRACTOR SHALL PROVIDE, TO THE ENGINEER, A SCHEDULE OF INVERT ELEVATIONS OF ALL SANITARY MANHOLES & DRAINAGE STRUCTURES PRIOR TO THE PLACEMENT OF THE LIME ROCK BASE COURSE. THIS SCHEDULE TO BE PROVIDED BY THE REGISTERED LAND SURVEYOR SUBMITTING THE "AS BUILT" DRAWINGS FOR THIS PROJECT.

12. WATER AND SEWER LINES ARE DESIGNATED TO FINISHED GRADES AND SHALL BE PROTECTED UNTIL FINISHED WORK IS COMPLETE.

13. HORIZONTAL SEPARATION BETWEEN WATER MAINS, VALVES, FITTINGS AND SANITARY OR STORM SEWER SHALL BE A MINIMUM OF 10 FEET OR IN ACCORDANCE WITH THE F.D.E.P. REGULATIONS AND G.C.S.P.W. STANDARD DETAILS.

14. ALL WATER LINE CROSSINGS SHALL HAVE A FULL LENGTH OF PIPE CENTERED OVER THE EXISTING UTILITY MAIN TO PROVIDE MAXIMUM JOINT SPACING AT CROSSINGS. WATER MAINS CROSSING SANITARY AND STORM SEWER LINES, AS WELL AS VALVES AND FITTINGS, MUST HAVE A MINIMUM 18" VERTICAL SEPARATION. IF THIS SEPARATION CANNOT BE OBTAINED, THE WATER MAIN MUST BE CONSTRUCTED OF DUCTILE IRON PIPE FOR A DISTANCE OF 10' EITHER SIDE OF THE SANITARY OR STORM SEWER MAIN, OR INSTALL WATER MAIN IN D.I. SLEEVE MIN. LENGTH 20' CENTERED, ENDS OF SLEEVE TO BE GROUT FILLED, IN EITHER CASE, MINIMUM OF 6" OF VERTICAL SEPARATION SHALL BE MAINTAINED.

15. MECHANICAL RESTRAINING DEVICES ARE REQUIRED IN ACCORDANCE WITH UTILITY COMPANY STANDARDS WHERE WATER MAINS ARE TERMINATED AND AT ALL BENDS AND TEES.

16. ALL ELECTRIC CONDUIT WORK SHALL BE COMPLETED PRIOR TO THE PRESSURE TESTING OF WATER AND SEWAGE FORCE MAINS.

17. TELEVISION INSPECTION SHALL BE REQUIRED ON ALL GRAVITY SEWER MAINS. THIS SERVICE SHALL BE PROVIDED BY THE CONTRACTOR AS PART OF THE SANITARY SEWER CONTRACT. A FULL WRITTEN REPORT AS TO THE CONDITION OF THE PIPE WITH PERTINENT DATA SUCH AS DISTANCE BETWEEN MANHOLES, LOCATION OF SERVICES, ETC. SHALL BE SUBMITTED TO THE OWNER AND ENGINEER PRIOR TO ACCEPTANCE, AND ONE COPY OF THE VIDEO TAPE SHALL BE SUBMITTED TO CITY OF G.C.S.. ALL DEFECTIVE AREAS AND ITEMS SHALL BE REPLACED OR REPAIRED PRIOR TO FINAL ACCEPTANCE. ALL REPAIRED SECTIONS MUST BE REINSPECTED PRIOR TO ACCEPTANCE.

18. ALL NEW AND/OR RELOCATED WATER MAIN PIPES AND FITTINGS SHALL NOT CONTAIN MORE THAN EIGHT PERCENT LEAD AND ALL PACKING AND JOINT MATERIALS USED IN THE JOINTS SHALL CONFORM WITH ALL APPLICABLE AWWA STANDARDS. ALL NEW AND/OR RELOCATED WATER SERVICES AND PLUMBING SHALL CONTAIN NO MORE THAN EIGHT PERCENT LEAD AND ALL SOLDERS AND FLUX SHALL CONTAIN NO MORE THAN 0.2 PERCENT LEAD.

19. IF SOLVENT CONTAMINATION IS FOUND IN THE PIPE TRENCH, WORK SHALL BE STOPPED AND THE PROPER AUTHORITIES NOTIFIED. WITH APPROVAL OF THE PERMITTING AGENCY, DUCTILE FITTINGS AND SOLVENT RESISTANT GASKET MATERIAL SHALL BE USED IN THE CONTAMINATED AREA. THE DUCTILE IRON PIPE SHALL EXTEND AT LEAST 100 FEET BEYOND ANY SOLVENT NOTED.

TOCOL TE Engineering, LLC
714 NORTH ORANGE AVENUE, GREEN COVE SPRINGS, FL 32043
PH: 904-215-1388 E.B. NUMBER: 26383

ENGINEER OF RECORD
JOHN J. MAHONEY III
FLORIDA
REGISTRATION NUMBER:
40177

WAREHOUSE BUILDING
FOR
MIKE REEVES

GREEN COVE SPRINGS GENERAL NOTES

REVISIONS

PLOT DATE:
DRAWN BY:
DESIGNED BY:
CHECKED BY:
SCALE:
JOB NO.:

SHEET NO.
2A

Date: 1/31/25 Time: 8:37 AM DWG Name: \\TE-GCS\01-Projects\23-627 Energy Cove Metal Buildings Mike Reeves\03-CADD\23-627 GENERAL NOTES - GCS.dwg Layout: 1

CITY GENERAL REQUIREMENTS:

1. CITY OF G.C.S. DEPARTMENT OF ENGINEERING REQUIRES TWENTY-FOUR (24) HOUR NOTICE ON ALL MEETINGS AND OR TESTING MEASURES RELATED TO SAID PROJECT.

2. CONSTRUCTION WARNING SIGNS ARE TO BE POST MOUNTED AND ERECTED BEFORE CONSTRUCTION CAN COMMENCE. THESE AND ALL TRAFFIC CONTROL DEVICES SHALL FOLLOW THE STANDARDS SET FORTH BY THE MANUAL OF UNIFORM TRAFFIC CONTROL DEVICES (MUTCD) AS WELL AS THE FLORIDA DEPARTMENT OF TRANSPORTATION (FDOT) STANDARD INDEXES.

3. ALL SUB BASE SHALL BE FIRM AND UNYIELDING.

4. ALL JOINTS OF PIPE, REGARDLESS OF MATERIAL TYPE, SHALL BE WRAPPED WITH FABRIC FILTER CLOTH PER FLORIDA DEPARTMENT OF TRANSPORTATION (FDOT) STANDARD INDEX 280.

5. ALL DISTURBED CITY OF G.C.S. RIGHTS-OF-WAY SHALL BE SODDED TO THE DISCRETION AND APPROVAL OF THE CITY OF G.C.S. ENGINEERING DEPARTMENT.

6. THE CURB SHALL BE CHECKED FOR FLOW DESIGN AT ANY STAGE OF THE PROJECT. A WATER TRUCK IS TO BE PROVIDED AT THE FINAL INSPECTION IN ORDER TO CHECK FLOW DESIGN.

7. ALL UNDER DRAIN LINES SHALL HAVE A FORTY-FIVE DEGREE CLEAN OUT AT TWO HUNDRED FOOT (200') INTERVALS AND AT THE END OF THE RUN. THE CURB SHALL BE MARKED WITH TEAL OR HUNTER GREEN PAINT AS TO THE LOCATION OF THE CLEAN OUT.

8. HANDICAP RAMPS SHALL BE INSTALLED WHEREVER THE SIDEWALK MEETS THE CURB.

9. ALL INFORMATION REQUESTED BY THE CITY SHALL BE IN HAND AT THE TIME OF THE FINAL INSPECTION. NO CONDITIONAL CERTIFICATES OF OCCUPANCY SHALL BE GIVEN.

10. THE CONTRACTOR SHALL VERIFY ALL UTILITY LOCATIONS PRIOR TO EXCAVATION AND TAKE ALL MEASURES NECESSARY TO PROTECT UTILITIES DURING CONSTRUCTION. SHOULD ANY UTILITY LINE OR COMPONENT BECOME DAMAGED OR REQUIRE RELOCATION THE CONTRACTOR SHALL IMMEDIATELY NOTIFY THE RESPONSIBLE UTILITY COMPANY, THE ENGINEER, AND THE CITY.

11. ALL SWALE SECTIONS ARE TO BE SODDED.

12. ALL DEVELOPER OR CONTRACTOR INSTALLED SIDEWALKS SHALL BE INSTALLED PRIOR TO THE FINAL INSPECTION.

13. A COPY OF THE CONTRACTORS' GENERAL LICENSE AND OR UNDER GROUND UTILITY LICENSE SHALL BE PROVIDED AT THE TIME OF THE PRE-CONSTRUCTION CONFERENCE.

14. ANY APPLICABLE ST. JOHNS RIVER WATER MANAGEMENT DISTRICT (SJRWMD) OR FLORIDA DEPARTMENT OF TRANSPORTATION (FDOT) PERMITS SHALL BE PROVIDED TO THE CITY BY THE PRE-CONSTRUCTION CONFERENCE. NO WORK SHALL BEGIN WITHOUT ALL APPLICABLE PERMITS ON FILE.

15. THE CONTRACTOR MUST OBTAIN APPROVAL FROM THE ST. JOHNS RIVER WATER MANAGEMENT DISTRICT (SJRWMD) BEFORE THE CITY WILL ACCEPT THE PROJECT.

16. THERE SHALL BE A MINIMUM THREE (3) DAYS NOTICE GIVEN FOR SCHEDULING THE FINAL INSPECTION.

17. AT THE FINAL INSPECTION, A LETTER OF COMPLIANCE, PROVIDED BY THE CITY, WILL NEED TO BE FILLED OUT AND SIGNED THE STATE OF FLORIDA REGISTERED PROFESSIONAL ENGINEER OF RECORD.

18. FIVE (5) DAYS PRIOR TO THE FINAL INSPECTION TWO (2) SETS OF BLUE LINE AS-BUILTS AND ONE (1) COPY ON DISK IN AUTOCAD FORMAT SHOWING THE FOLLOWING SHALL BE SUBMITTED:

CITY EROSION CONTROL NOTES:

19. PURSUANT TO COMPREHENSIVE PLAN POLICY 9:1 OF THE CONSERVATION ELEMENT, THE USE OF ONE OR MORE EROSION CONTROL MEASURES, AS REQUESTED BY THE CITY OF G.C.S. ENGINEERING DEPARTMENT, SHALL BE USED DURING CONSTRUCTION. THESE WILL BE, BUT NOT LIMITED TO, ITEMS SUCH AS TEMPORARY GRASS COVER, SEDIMENT BASINS OR PONDS, MULCHING, TEMPORARY FENCES, DIVERSION CHANNELS AND HAY BALES.

20. PURSUANT TO COMPREHENSIVE PLAN POLICY 9:1 OF THE CONSERVATION ELEMENT, SCHEDULING OF CONSTRUCTION SHALL BE GIVEN SPECIAL CONSIDERATION TO MINIMIZE EXPOSURE OF BARE SOIL. THE CONTRACTOR WILL FORMULATE A CONSTRUCTION SCHEDULE TO BE GIVEN TO THE CITY REPRESENTATIVE.

21. THE CONTRACTOR SHALL CHECK EACH DAY TO INSURE THAT ALL EROSION CONTROL DEVICES ARE IN PLACE AND WORKING PROPERLY.

22. ALL EROSION CONTROL MEASURES SHALL BE IN COMPLIANCE WITH THE RULES, REGULATION AND STANDARDS OF THE ST. JOHNS RIVER WATER MANAGEMENT DISTRICT (SJRWMD), THE FLORIDA DEPARTMENT OF ENVIRONMENTAL PROTECTION (FDEP) AND THE UNITED STATES ARMY CORP OF ENGINEERS.

23. THE CONTRACTOR SHALL TAKE WHATEVER MEANS NECESSARY TO PREVENT THE EROSION OF SOIL AND DEPOSITION OF SEDIMENT ON ADJACENT AND DOWNSTREAM PROPERTIES.

24. ALL EROSION CONTROL MEASURES SHALL BE INSTALLED PRIOR TO CONSTRUCTION.

CITY PUBLIC SAFETY NOTES:

25. BLUE, ALL-DIRECTIONAL HIGHWAY-STYLE REFLECTIVE MARKERS SHALL BE PROVIDED ON ALL ROADWAYS, ALLEYS, ACCESS ROADS AND ALL PAVED AREA IN FRONT OF EACH HYDRANT. SAID MARKERS SHALL BE LOCATED IN THE LANE OF TRAVEL ON THE SAME SIDE AS THE HYDRANT. THESE MARKERS SHALL BE IN PLACE AT THE TIME OF FINAL INSPECTION OR APPROVAL.

26. A DISK SHALL BE PROVIDED, IN AUTOCAD FORMAT, SHOWING THE LOCATION OF ALL FIRE HYDRANTS BEFORE FINAL APPROVAL.

PAVING, DRAINAGE AND CONSTRUCTION NOTES:

27. ALL UNSUITABLE MATERIAL SHALL BE REMOVED TWO FEET (2') BEYOND THE BACK OF CURB AND TWO FEET (2') BELOW FINISHED GRADE.

28. COMPACTION DENSITIES FOR ALL ROADWAY CROSSINGS ARE TO BE TAKEN IN ONE-FOOT (1') LIFTS. STORM SEWER PIPE DENSITIES WILL START AT THE HAUNCHES OF THE PIPE AND BE TAKEN EVERY 6" UNTIL IT HAS REACHED 1' ABOVE THE PIPE.

29. IF UNSUITABLE MATERIAL IS FOUND WITHIN THE LIMITS OF THE ROAD OR IF MATERIAL IS HAULED IN FOR ROADWAY FILL AT A DEPTH GREATER THAN ONE-FOOT (1') THEN THE ENTIRE ROADWAY SHALL BE UNDER DRAINED IN ACCORDANCE WITH THE GEOTECHNICAL REPORT AND INSTALLED PER THE APPROVED CITY OF G.C.S. DETAIL.

30. ALL STORM SEWER PIPES SHALL BE CUT FLUSH WITH THE INTERIOR WALL OF ANY TYPE MANHOLE OR CURB AND DITCH BOTTOM INLETS.

31. COMPACTION DENSITY TESTS FOR ALL WATER AND SEWER CROSSINGS WILL START THREE FEET (3') ABOVE THE PIPE.

32. COMPACTION DENSITY TESTS FOR ALL WATER AND SEWER CROSSINGS WILL START AT THE SPRING LINE OF THE PIPE.

33. IF THE APPROVED DESIGN REQUIRED THE INLET OR STORM RUN TO BE SURCHARGED, ALL INLETS SHALL BE INSPECTED BEFORE BEING EXPOSED TO THE SYSTEM.

34. TEST CYLINDERS SHALL RUN FOR ALL CONCRETE STRUCTURES. THERE WILL BE THREE (3) TESTS PER EACH DAY POUR WITH ONE (1) AT SEVEN (7) DAY BREAK, AND TWO (2) TWENTY-EIGHT (28) DAY BREAKS.

35. THE ASPHALT SHALL BE CORED FOR THICKNESS AND WILL BE GIVEN A ONE-QUARTER INCH (1/4") TOLERANCE. IF HOWEVER THE CITY'S REPRESENTATIVE IS PRESENT AT POUR AND FEELS COMFORTABLE WITH THE REQUIREMENTS THEN HE OR SHE MAY WAVE THIS POLICY.

36. LBR'S FOR SUBGRADE AT FORTY (40) AND LIME ROCK OR ALTERNATIVE BASE COURSE AT ONE HUNDRED (100). THERE WILL BE NO UNDER TOLERANCE.

37. ALL MATERIAL USED FOR BACK FILL SHALL BE SAND (A3) FREE DRAINING.

38. THERE ARE TO BE NO OPENED TRENCHES AT DAY'S END.

39. ALL DIRT AND DEBRIS TRACKED OUT OF THE PROJECT SHALL BE CLEANED DAILY AND TO THE DISCRETION OF THE CITY OF G.C.S. ENGINEERING DEPARTMENT.

SIGNING AND PAVEMENT MARKING NOTES:

40. ALL SIGNS MUST MEET THE FLORIDA DEPARTMENT OF TRANSPORTATION (FDOT) STANDARDS FOR ENGINEERING GRADE SIGN FACES IN REFLECTIVITY.

41. ALL FINAL PAVEMENT MARKINGS WITHIN THE RIGHTS-OF-WAY SHALL BE THERMOPLASTIC.

42. ALL SIGNS SHALL BE ON A TEN-FOOT (10') POLE A MINIMUM OF SEVEN FEET (7') FROM THE GROUND.

43. STREET SIGNS SHALL BE MOUNTED WITH TEE CAPS.

44. STREET SIGNS SHALL BE SIX INCHES (6") WIDE WITH GREEN BACKINGS AND WHITE LETTERS AND BORDERING.

45. STOP SIGNS SHALL BE A MINIMUM TWENTY-FOUR INCH BY TWENTY-FOUR INCH (24" X 24").

46. STOP SIGNS ARE TO BE PLACED FOUR FEET (4') FROM BACK OF CURB, FOR FEET (4') BEHIND CROSS WALKS AND ON THE RIGHT HAND SIDE OF THE ROAD.

47. STREET SIGNS ARE TO BE LOCATED ON THE LEFT HAND CORNER OF THE INTERSECTION FOUR FEET (4') FROM THE BACK OF CURB.

48. STREET / STOP SIGN COMBINATIONS ARE NOT ALLOWED.

49. ALL REGULATORY SIGNS SHALL BE BLACK AND WHITE. ALL CONSTRUCTION WARNING SIGNS SHALL BE ORANGE AND BLACK. ALL WARNING SIGNS SHALL BE YELLOW AND BLACK. ALL NO PARKING AND STOP SIGNS SHALL BE RED AND WHITE.

50. STOP BARS SHALL BE TWENTY-FOUR INCHES (24") WIDE AND LANE WIDTH. ALL STOP BARS SHALL BE THERMOPLASTIC.

51. ALL SIGNS SHALL BE SIDED IN ACCORDANCE WITH THE MANUAL ON UNIFORM TRAFFIC CONTROL DEVICES (MUTCD) STANDARDS.

52. ALL DETECTABLE WARNING PADS FOR ADA RAMPS ARE TO BE WET-SET MATS.

CITY MAINTENANCE OF TRAFFIC:

53. AFTER ISSUANCE OF THE PERMIT, THE PERMITTEE SHALL NOTIFY THE CITY PUBLIC WORKS DEPARTMENT A MINIMUM OF TWO BUSINESS DAYS PRIOR TO COMMENCING CONSTRUCTION. THIS NOTIFICATION WILL ALLOW FOR SCHEDULING OF INSPECTIONS.

54. IF A ROAD CLOSURE IS REQUIRED, THE PERMITTEE SHALL SUBMIT WITH THE PERMIT APPLICATION A MAINTENANCE OF TRAFFIC (MOT) PLAN TO INCLUDE ALL PROPOSED ROAD CLOSURES AND AN EXPECTED TIME DURATION FOR EACH CLOSING.

55. ROAD CLOSURES SHALL REQUIRE SEPARATE APPROVAL BY THE PUBLIC WORKS DEPARTMENT AND A MINIMUM OF THREE BUSINESS DAYS PRIOR NOTIFICATION BEFORE THE COMMENCEMENT OR CONSTRUCTION.

56. ROAD CLOSURES SHALL REQUIRE SEPARATE APPROVAL OF CLAY COUNTY FIRE AND RESCUE.

57. ROAD CLOSURES OF FEWER THAN 15 MINUTES SHALL NOT REQUIRE NOTIFICATION.

CITY AS-BUILT REQUIREMENTS:

58. AS-BUILTS MUST BE SUBMITTED ON THE APPROVED GRADING.

TOCOL TE Engineering, LLC
714 NORTH ORANGE AVENUE, GREEN COVE SPRINGS, FL 32043
PH: 904-215-1388 E.B. NUMBER: 26383

ENGINEER OF RECORD
JOHN J. MAHONEY III
FLORIDA
REGISTRATION NUMBER:
40177

WAREHOUSE BUILDING
FOR
MIKE REEVES

GREEN COVE SPRINGS GENERAL NOTES

REVISIONS

PLOT DATE:
DRAWN BY:
DESIGNED BY:
CHECKED BY:
SCALE:
JOB NO.:

SHEET NO.
2B

Date: 1/31/25 Time: 8:37 AM DWG Name: \\TE-GCS\01-Projects\23-627 Energy Cove Metal Buildings Mike Reeves\03-CADD\23-627 GENERAL NOTES - GCS.dwg Layout: 2

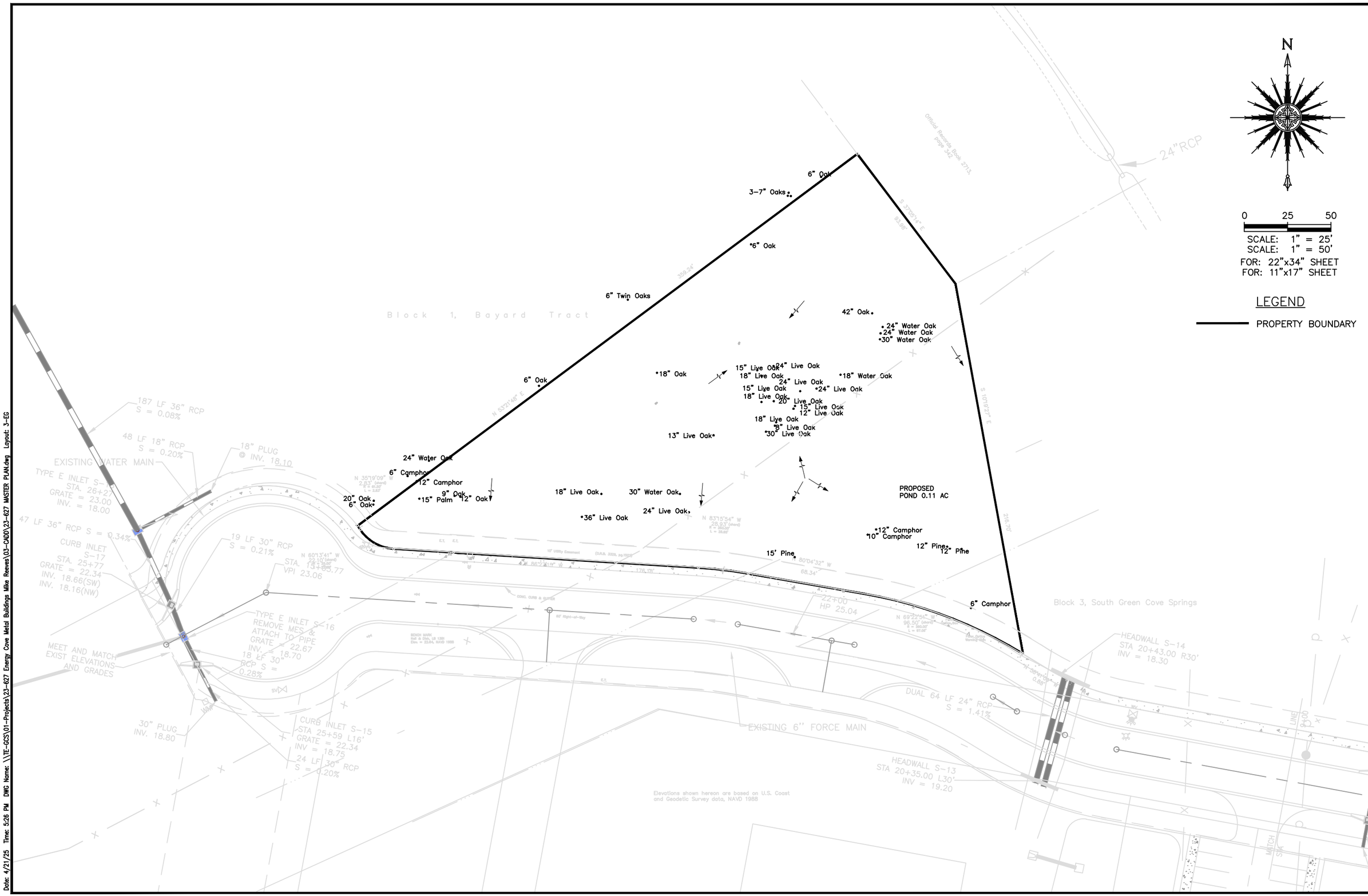

TOCOL Engineering, LLC
714 NORTH ORANGE AVENUE, GREEN COVE SPRINGS, FL 32043
PH: 904-215-1388 E.B. NUMBER: 26383

ENGINEER OF RECORD
JOHN J. MAHONEY III
FLORIDA
REGISTRATION NUMBER:
40177

WAREHOUSE BUILDING
FOR
MIKE REEVES

EXISTING GROUND

REVISIONS

PLOT DATE:
DRAWN BY:
DESIGNED BY:
CHECKED BY:
SCALE:
JOB NO.:

SHEET NO.
3

Date: 4/21/25 Time: 5:26 PM DWG Name: \\TE-GCS\01-Projects\23-627 Energy Cove Metal Buildings Mike Reeves\03-CADD\23-627 MASTER PLAN.dwg Layout: 3-EG

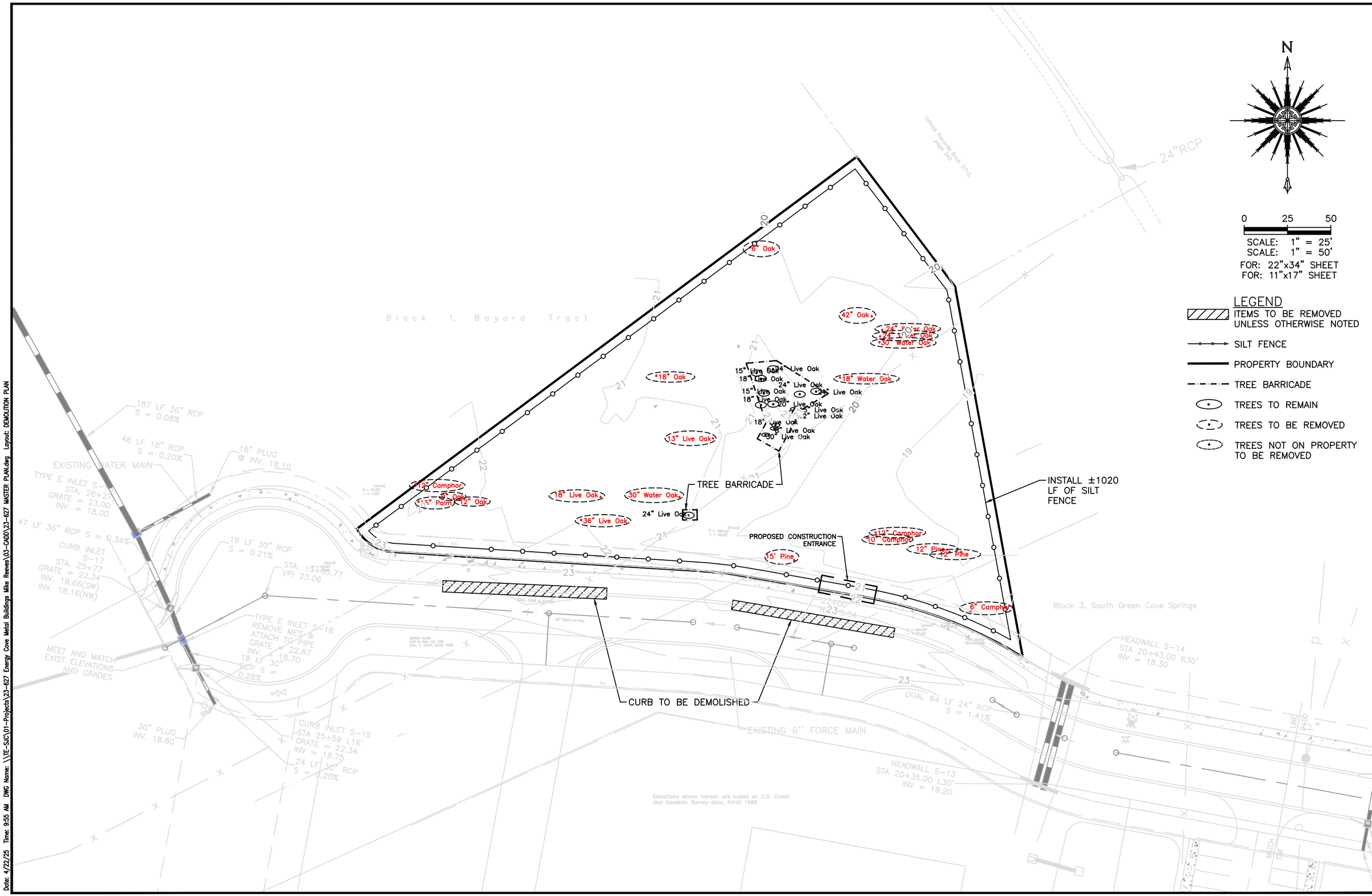

TOCOL Engineering, LLC
714 NORTH ORANGE AVENUE, GREEN COVE SPRINGS, FL 32043
PH: 904-215-1388 E.B. NUMBER: 26383

ENGINEER OF RECORD
JOHN J. MAHONEY III
FLORIDA REGISTRATION NUMBER: 40177

WAREHOUSE BUILDING
FOR
MIKE REEVES

DEMOLITION PLAN

REVISIONS

PLOT DATE:
DRAWN BY:
DESIGNED BY:
CHECKED BY:
SCALE:
JOB NO.:

SHEET NO.
4

Date: 4/22/25 Time: 9:55 AM DWG Name: \\TE-SJC\01-Projects\23-627 Energy Cove Metal Buildings Mike Reeves\03-CADD\23-627 MASTER PLAN.dwg Layout: DEMOLITION PLAN

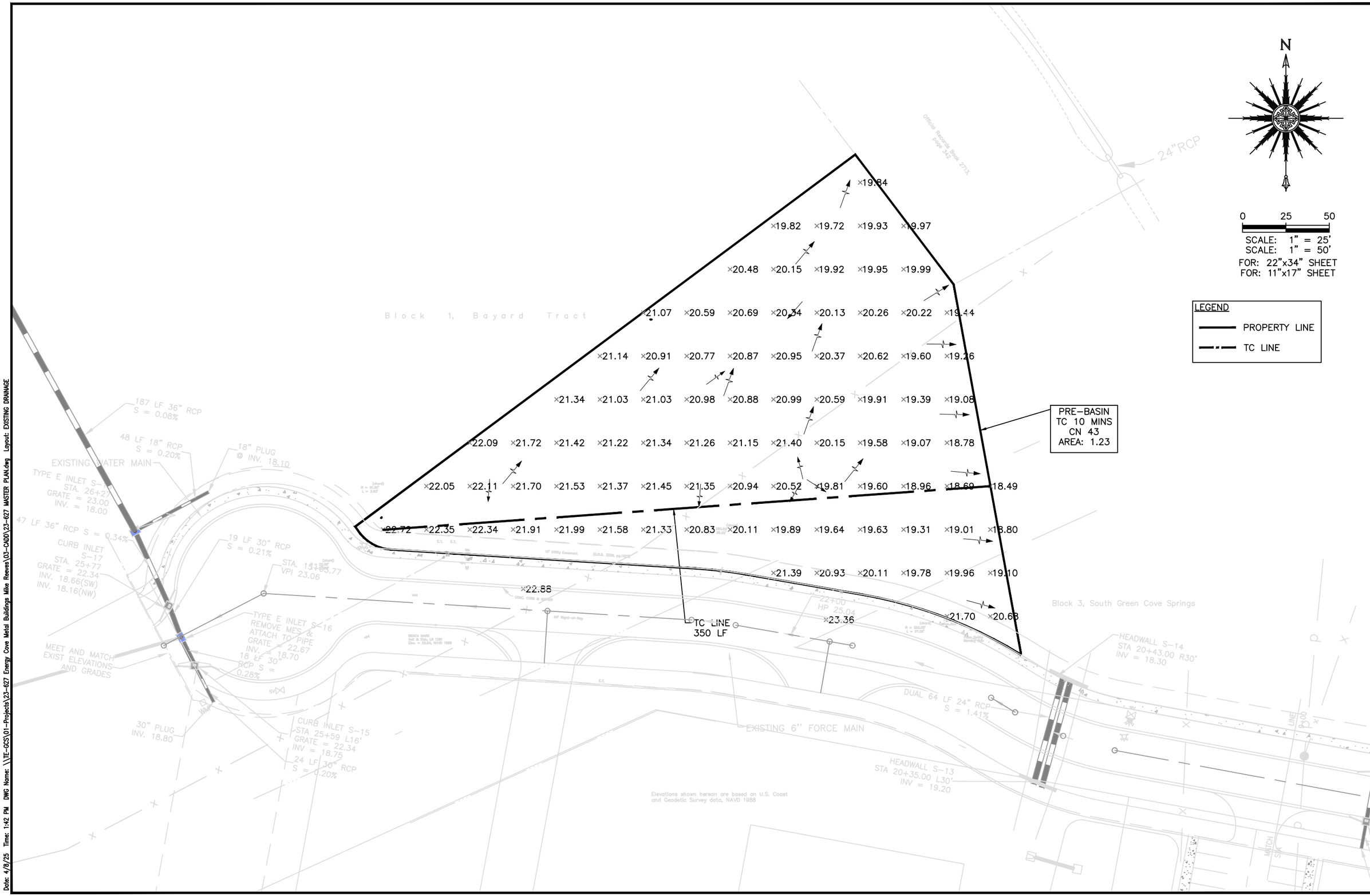

TOCOI Engineering, LLC
714 NORTH ORANGE AVENUE, GREEN COVE SPRINGS, FL 32043
PH: 904-215-1388 E.B. NUMBER: 26383

ENGINEER OF RECORD
JOHN J. MAHONEY III
FLORIDA
REGISTRATION NUMBER: 40177

WAREHOUSE BUILDING
FOR
MIKE REEVES

EXISTING DRAINAGE PLAN

REVISIONS

PLOT DATE:
DRAWN BY:
DESIGNED BY:
CHECKED BY:
SCALE:
JOB NO.:

SHEET NO.
5

Date: 4/8/25 Time: 1:42 PM DWG Name: \\TE-GCS\01-Projects\23-627 Energy Cove Metal Buildings Mike Reeves\03-CADD\23-627 MASTER PLAN.dwg Layout: EXISTING DRAINAGE

SITE DATA

PROJECT AREA	=	1.23 AC
BUILDING AREA	=	0.12 AC
ASPHALT AREA	=	0.27 AC
REQUIRED PARKING	=	6 SPACES FOR OFFICE
		1 SPACE FOR WAREHOUSE
		1 ADA PARKING

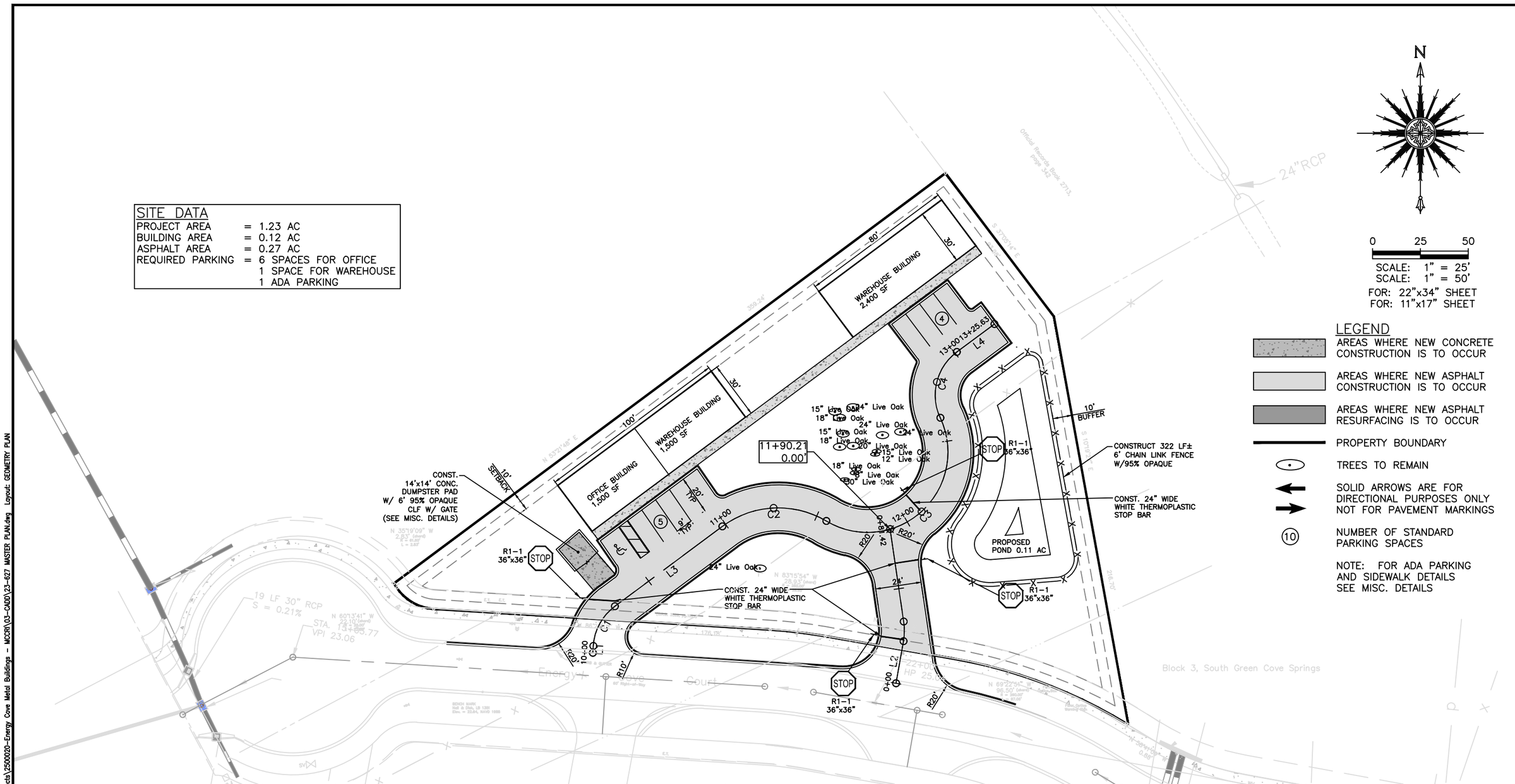

PARCEL LINE TABLE

LINE #	LENGTH	BEARING
L1	3.61'	S 3°32'45" W
L2	22.35'	N 9°55'28" E
L3	70.03'	S 53°21'48" W
L4	24.54'	S 53°21'48" W

PARCEL CURVE TABLE

CURVE #	LENGTH	RADIUS	DELTA	CH LENGTH	CH BEARING
C1	24.35'	28.00'	49°49'03"	23.59'	S 28°27'16" W
C2	57.69'	49.00'	67°27'15"	54.41'	S 87°05'26" W
C3	107.03'	42.00'	146°00'29"	80.33'	S 47°48'49" W
C4	38.39'	28.00'	78°33'14"	35.45'	S 14°05'11" W

N

0 25 50

SCALE: 1" = 25'
SCALE: 1" = 50'
FOR: 22"x34" SHEET
FOR: 11"x17" SHEET

LEGEND

- AREAS WHERE NEW CONCRETE CONSTRUCTION IS TO OCCUR
- AREAS WHERE NEW ASPHALT CONSTRUCTION IS TO OCCUR
- AREAS WHERE NEW ASPHALT RESURFACING IS TO OCCUR
- PROPERTY BOUNDARY
- TREES TO REMAIN
- SOLID ARROWS ARE FOR DIRECTIONAL PURPOSES ONLY NOT FOR PAVEMENT MARKINGS
- (10) NUMBER OF STANDARD PARKING SPACES

NOTE: FOR ADA PARKING AND SIDEWALK DETAILS SEE MISC. DETAILS

TOCOI Engineering, LLC
714 NORTH ORANGE AVENUE, GREEN COVE SPRINGS, FL 32043
PH: 904-215-1388 E.B. NUMBER: 26383

ENGINEER OF RECORD
JOHN J. MAHONEY III
FLORIDA REGISTRATION NUMBER: 40177

WAREHOUSE BUILDING
FOR
MIKE REEVES
GEOMETRY PLAN

REVISIONS

PLOT DATE:
DRAWN BY:
DESIGNED BY:
CHECKED BY:
SCALE:
JOB NO.:

SHEET NO.
7

Date: 6/2/25 Time: 3:35 PM DWG Name: \\TE-GCS\01-Projects\2500020-Energy Cove Metal Buildings - MOOR\03-CADD\23-627 MASTER PLAN.dwg Layout: GEOMETRY PLAN

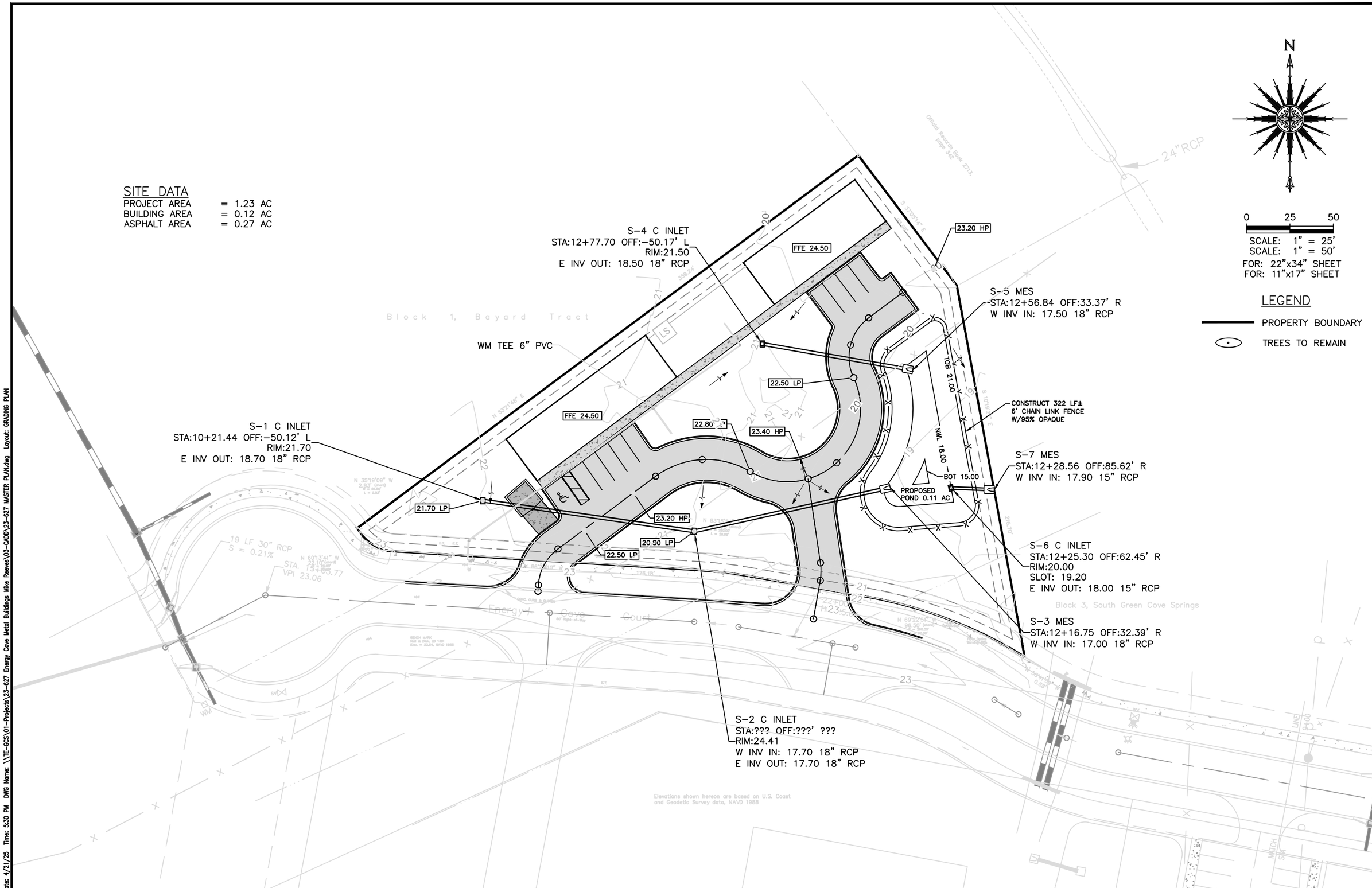

TOCOL Engineering, LLC
714 NORTH ORANGE AVENUE, GREEN COVE SPRINGS, FL 32043
PH: 904-215-1388 E.B. NUMBER: 26383

ENGINEER OF RECORD
JOHN J. MAHONEY III
FLORIDA
REGISTRATION NUMBER:
40177

WAREHOUSE BUILDING
FOR
MIKE REEVES

GRADING AND DRAINAGE PLAN

REVISIONS

PLOT DATE:
DRAWN BY:
DESIGNED BY:
CHECKED BY:
SCALE:
JOB NO.:

SHEET NO.
8

Date: 4/21/25 Time: 5:30 PM DWG Name: \\TE-GCS\01-Projects\23-627 Energy Cove Metal Buildings Mike Reeves\03-CADD\23-627 MASTER PLAN.dwg Layout: GRADING PLAN

SEDIMENT AND EROSION CONTROL NOTES

1. THE CONTRACTOR IS RESPONSIBLE FOR REMOVING SILT FROM SITE IF NOT REUSABLE ON-SITE AND ASSURING PLAN ALIGNMENT AND GRADE IN ALL DITCHES AND SWALES AT COMPLETION OF CONSTRUCTION.
2. THE SITE CONTRACTOR IS RESPONSIBLE FOR REMOVING THE TEMPORARY EROSION AND SEDIMENT CONTROL DEVICES AFTER COMPLETION OF CONSTRUCTION AND ONLY WHEN AREAS HAVE BEEN STABILIZED.
3. ADDITIONAL PROTECTION – ON-SITE PROTECTION IN ADDITION TO THE ABOVE MUST BE PROVIDED THAT WILL NOT PERMIT SILT TO LEAVE THE PROJECT CONFINES DUE TO UNSEEN CONDITIONS OR ACCIDENTS.
4. CONTRACTOR SHALL INSURE THAT ALL DRAINAGE STRUCTURES, PIPES, ETC. ARE CLEANED OUT AND WORKING PROPERLY AT TIME OF ACCEPTANCE.
5. WIRE MESH SHALL BE LAID OVER THE DROP INLET SO THAT THE WIRE EXTENDS A MINIMUM OF 1 FOOT BEYOND EACH SIDE OF THE INLET STRUCTURE. HARDWARE CLOTH OR COMPARABLE WIRE MESH WITH 1/2-INCH OPENINGS SHALL BE USED. IF MORE THAN ONE STRIP OF MESH IS REQUIRED, THE STRIPS SHALL BE OVERLAPPED.
6. FDOT NO. 1 COARSE AGGREGATE SHALL BE PLACED OVER THE WIRE MESH AS INDICATED ON SEDIMENT FILTER DETAIL (SEE DETAIL THIS SHEET). THE DEPTH OF STONE SHALL BE AT LEAST 12 IN CHES OVER THE ENTIRE INLET OPENING. THE STONE SHALL EXTEND BEYOND THE INLET OPENING AT LEAST 18 INCHES ON ALL SIDES.
7. IF THE STONE FILTER BECOMES CLOGGED WITH SEDIMENT SO THAT IT NO LONGER ADEQUATELY PERFORMS ITS FUNCTION, THE STONES MUST BE PULLED AWAY FROM THE INLET, CLEANED AND REPLACED.
8. BALES SHALL BE EITHER WIRE-BOUND OR STRING-TIED WITH THE BINDINGS ORIENTED AROUND THE SIDES RATHER THAN OVER AND UNDER THE BALES.
9. BALES SHALL BE PLACED LENGTHWISE IN A SINGLE ROW SURROUNDING THE INLET, WITH THE ENDS OF ADJACENT BALES PRESSED TOGETHER.
10. THE FILTER BARRIER SHALL BE ENTRENCHED AND BACKFILLED. A TRENCH SHALL BE EXCAVATED TO A MINIMUM DEPTH OF 4 INCHES. AFTER THE BALES ARE STAKED, THE EXCAVATED SOIL SHALL BE BACKFILLED AND COMPACTED AGAINST THE FILTER BARRIER.
11. EACH BALE SHALL BE SECURELY ANCHORED AND HELD IN PLACE BY AT LEAST TWO STAKES OR REBARS DRIVEN THROUGH THE BALE.
12. LOOSE COIR SHOULD BE WEDGED BETWEEN BALES TO PREVENT WATER FROM ENTERING BETWEEN BALES.
13. COIR BALE BARRIERS SHALL BE INSPECTED IMMEDIATELY AFTER EACH RAINFALL AND AT LEAST DAILY DURING PROLONGED RAINFALL.
14. CLOSE ATTENTION SHALL BE GIVEN TO THE REPAIR OF DAMAGED BALES, END RUNS AND UNDERCUTTING BENEATH BALES.
15. NECESSARY REPAIRS TO BARRIERS OR REPLACEMENT OF BALES SHALL BE ACCOMPLISHED PROMPTLY.
16. SEDIMENT DEPOSITS SHOULD BE REMOVED AFTER EACH RAINFALL. IT MUST BE REMOVED WHEN THE LEVEL OF DEPOSITION REACHES APPROXIMATELY ONE-HALF THE HEIGHT OF THE BARRIER.
17. ANY SEDIMENT DEPOSITS REMAINING IN PLACE, AFTER THE COIR BALE OR FILTER BARRIERS, AND OR SILT FENCES ARE NO LONGER REQUIRED, SHALL BE DRESSED TO CONFORM TO THE EXISTING GRADE, PREPARED AND SEEDED.
18. SILT FENCES AND FILTER BARRIERS SHALL BE INSPECTED IMMEDIATELY AFTER EACH RAINFALL AND AT LEAST DAILY DURING PROLONGED RAINFALL. ANY REQUIRED REPAIRS SHALL BE MADE IMMEDIATELY.
19. SHOULD THE FABRIC ON A SILT FENCE OR FILTER BARRIER BECOMPOSE OR BECOME INEFFECTIVE PRIOR TO THE END OF THE EXPECTED USABLE LIFE AND THE BARRIER STILL BE NECESSARY, THE FABRIC SHALL BE REPLACED IMMEDIATELY.
20. STRUCTURES SHALL BE INSPECTED AFTER EACH RAIN AND REPAIRS MADE AS REQUIRED.
21. SEDIMENT SHALL BE REMOVED AND THE TRAP RESTORED TO ITS ORIGINAL DIMENSIONS WHEN THE SEDIMENT HAS ACCUMULATED TO 1/2 THE DESIGN DEPTH OF THE TRAP. REMOVED SEDIMENT SHALL BE DEPOSITED IN A SUITABLE AREA AND IN SUCH A MANNER THAT IT WILL NOT ERODE.
22. THE CONTRACTOR IS RESPONSIBLE FOR FOLLOWING THE BEST EROSION AND SEDIMENT CONTROL PRACTICES AS OUTLINED IN THE PLANS, SPECIFICATIONS AND ST. JOHNS RIVER WATER MANAGEMENT DISTRICT RULES AND REGULATIONS.
23. FOR ADDITIONAL INFORMATION ON SEDIMENT AND EROSION CONTROL REFER TO "THE FLORIDA DEVELOPMENT MANUAL – A GUIDE TO SOUND LAND AND WATER MANAGEMENT" FROM THE STATE OF FLORIDA DEPARTMENT OF ENVIRONMENTAL REGULATION (F.D.E.P.) CHAPTER 6.
24. EROSION AND SEDIMENT CONTROL BARRIERS SHALL BE PLACED ADJACENT TO ALL WETLAND AREAS WHERE THERE IS POTENTIAL FOR DOWNSTREAM WATER QUALITY DEGRADATION. SEE DETAILS (THIS SHEET) FOR TYPICAL CONSTRUCTION.
25. SOD SHALL BE PLACED IN AREAS WHICH MAY REQUIRE IMMEDIATE EROSION PROTECTION TO ENSURE WATER QUALITY STANDARDS ARE MAINTAINED.
26. ANY DISCHARGE FROM DEWATERING ACTIVITY SHALL BE FILTERED AND CONVEYED TO THE OUTFALL IN A MANNER WHICH PREVENTS EROSION AND TRANSPORTATION OF SUSPENDED SOLIDS TO THE RECEIVING OUTFALL.
27. DEWATERING PUMPS SHALL NOT EXCEED THE CAPACITY OF THAT WHICH REQUIRES A CONSUMPTIVE USE PERMIT FROM THE ST. JOHNS RIVER WATER MANAGEMENT DISTRICT.
28. ALL DISTURBED AREAS SHALL BE GRASSED, FERTILIZED AND MULCHED UNTIL A PERMANENT VEGETATIVE COVER IS ESTABLISHED. CONTRACTOR SHALL USE ADDITIONAL MEASURES TO STABILIZE DISTURBED AREAS THROUGH COMPACTION, SILT SCREENS, COIR BALES, AND GRASSING. ALL FILL SLOPES 3:1 OR STEEPER TO RECEIVE STAKED SOLID SOD.
29. ALL DEWATERING, EROSION, AND SEDIMENT CONTROL SHALL REMAIN IN PLACE UNTIL AFTER COMPLETION OF CONSTRUCTION, AND REMOVED ONLY WHEN AREAS HAVE BEEN STABILIZED.
30. THIS PLAN INDICATES THE MINIMUM EROSION AND SEDIMENT MEASURES REQUIRED FOR THIS PROJECT. THE CONTRACTOR IS RESPONSIBLE FOR MEETING ALL APPLICABLE RULES, REGULATIONS AND WATER QUALITY GUIDELINES AND MAY NEED TO INSTALL ADDITIONAL CONTROLS.
31. THE CONTRACTOR SHALL BE REQUIRED TO RESPOND TO ALL WATER MANAGEMENT DISTRICT INQUIRIES, RELATIVE TO COMPLIANCE OF SJRWMD FOR EROSION AND SEDIMENTATION CONTROL. THE COST OF THIS COMPLIANCE SHALL BE PART OF THE CONTRACT.
32. EROSION AND SEDIMENT CONTROL BARRIERS SHALL BE PLACED ADJACENT TO ALL WETLAND AREAS AND PRESERVATION EASEMENTS WHERE THERE IS POTENTIAL FOR DOWNSTREAM WATER QUALITY DEGRADATION.
33. THE CONTRACTOR SHALL BE RESPONSIBLE FOR ESTABLISHING A PERMANENT STAND OF SOD AND/OR GRASS PER THE CONTRACT DOCUMENTS AND MEETING THE ST. JOHNS RIVER WATER MANAGEMENT DISTRICT, ST. JOHNS COUNTY, AND NPDES FINAL STABILIZATION REQUIREMENTS.
34. THESE PLANS INCLUDING THE POLLUTION PREVENTION PLAN INDICATE THE MINIMUM EROSION & SEDIMENT CONTROL MEASURES REQUIRED FOR THIS PROJECT. FOR ADDITIONAL INFORMATION ON SEDIMENT AND EROSION CONTROL REFER TO "THE FLORIDA DEVELOPMENT MANUAL – A GUIDE TO SOUND LAND AND WATER MANAGEMENT" FROM THE STATE OF FLORIDA DEPARTMENT OF ENVIRONMENTAL PROTECTION (F.D.E.P.) CHAPTER 6. CONTRACTOR SHALL PROVIDE EROSION PROTECTION AND TURBIDITY CONTROL AS REQUIRED TO INSURE CONFORMANCE TO STATE AND FEDERAL WATER QUALITY STANDARDS AND MAY NEED TO INSTALL ADDITIONAL CONTROLS TO CONFORM TO AGENCIES REQUIREMENTS. IF A WATER QUALITY VIOLATION OCCURS, THE CONTRACTOR SHALL BE WHOLLY RESPONSIBLE FOR ALL DAMAGE AND ALL COSTS WHICH MAY RESULT INCLUDING LEGAL FEES, CONSULTANT FEES, CONSTRUCTION COSTS, AND FINES.
35. 48 HOURS PRIOR TO COMMENCEMENT OF CONSTRUCTION, THE CONTRACTOR WILL SUBMIT A "NOTICE OF INTENT" TO THE EPA IN ACCORDANCE WITH NATIONAL POLLUTANT DISCHARGE ELIMINATION SYSTEM RULES AND REGULATIONS. (FOR ANY CONSTRUCTION NOT COVERED BY THE OWNER'S "NOTICE OF INTENT" PERMIT)

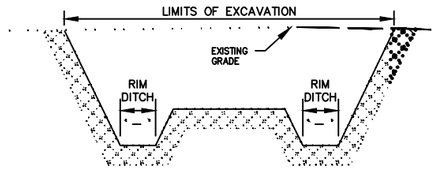

SECTION A–A

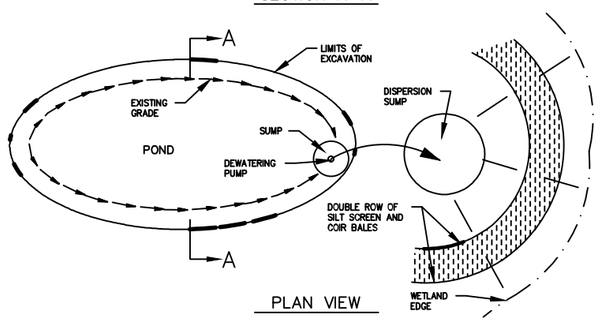

PLAN VIEW

TEMPORARY DEWATERING DETAIL

N.T.S.

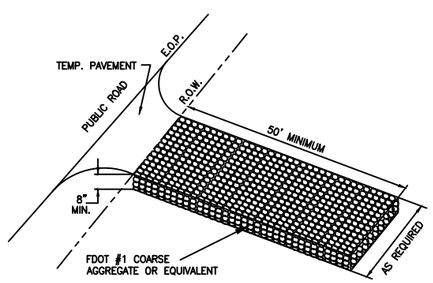

STABILIZED CONSTRUCTION ENTRANCE

N.T.S.

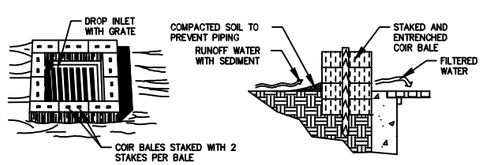

SPECIFIC APPLICATION

THIS METHOD OF INLET PROTECTION IS APPLICABLE WHERE THE INLET DRAINS A RELATIVELY FLAT AREA (SLOPES NO GREATER THAN 5 PERCENT) WHERE SHEET OR OVERLAND FLOWS (NOT EXCEEDING 0.5 cfs) ARE TYPICAL. THE METHOD SHALL NOT APPLY TO INLETS RECEIVING CONCENTRATED FLOWS, SUCH AS IN STREET OR HIGHWAY MEDIANS.

COIR BALE DROP INLET SEDIMENT FILTER

N.T.S.

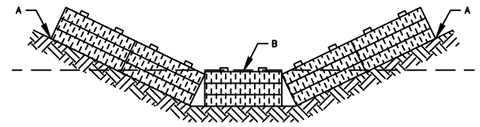

POINTS A SHOULD BE HIGHER THAN POINT B

PROPER PLACEMENT OF COIR BALE IN A DRAINAGE WAY

N.T.S.

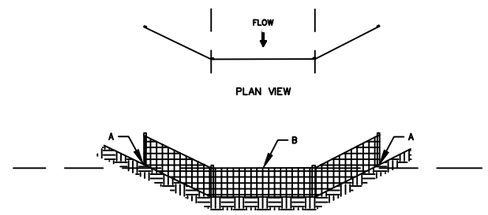

SECTION VIEW
POINTS A SHOULD BE HIGHER THAN POINT B

PROPER PLACEMENT OF A FILTER BARRIER IN DRAINAGE WAY

N.T.S.

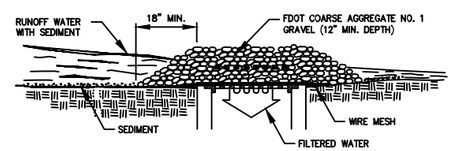

SPECIFIC APPLICATION

THIS METHOD OF INLET PROTECTION IS APPLICABLE WHERE HEAVY CONCENTRATED FLOWS ARE EXPECTED, BUT NOT WHERE PONDING AROUND THE STRUCTURE MIGHT CAUSE EXCESSIVE INCONVENIENCE OR DAMAGE TO ADJACENT STRUCTURES AND UNPROTECTED AREAS.

GRAVEL AND WIRE MESH DROP INLET SEDIMENT FILTER

N.T.S.

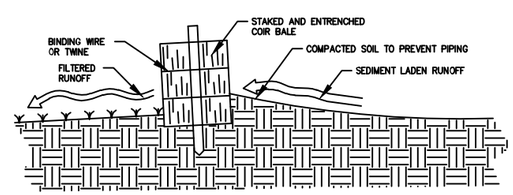

CROSS-SECTION OF A PROPERLY INSTALLED COIR BALE

N.T.S.

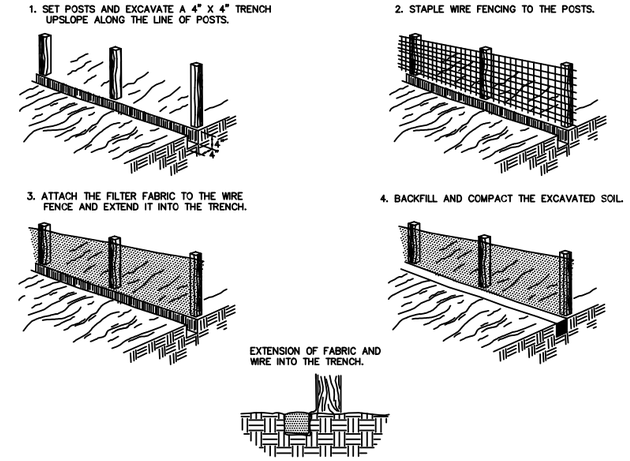

CONSTRUCTION OF SILT FENCE

N.T.S.

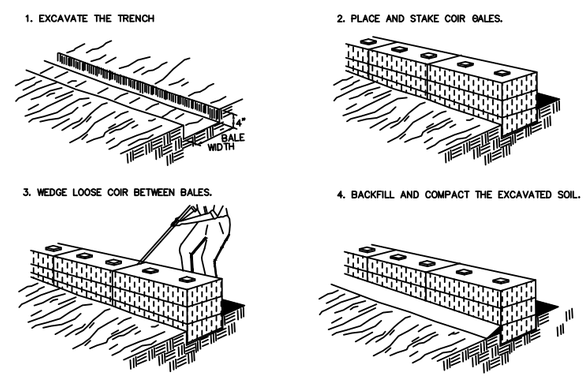

CONSTRUCTION OF A COIR BALE BARRIER

N.T.S.

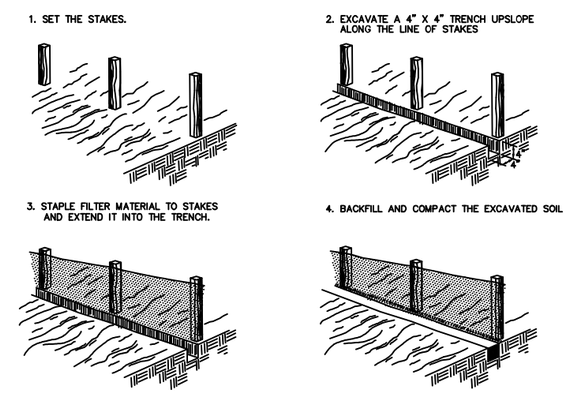

CONSTRUCTION OF A FILTER BARRIER

N.T.S.

TOCOL Engineering, LLC
714 NORTH ORANGE AVENUE, GREEN COVE SPRINGS, FL 32043
PH: 904-215-1388 E.B. NUMBER: 26383

ENGINEER OF RECORD
JOHN J. MAHONEY III
FLORIDA
REGISTRATION NUMBER: 40177

WAREHOUSE BUILDING
FOR
MIKE REEVES

EROSION CONTROL DETAILS

REVISIONS

PLOT DATE:
DRAWN BY:
DESIGNED BY:
CHECKED BY:
SCALE:
JOB NO.:

SHEET NO.
9A

Date: 1/31/25 Time: 9:19 AM DWG Name: \\TE-GCS\01-Projects\23-627 Energy Cove Metal Buildings Mike Reeves\03-CADD\09_23-627 EROSION CONTROL DETAILS.dwg Layout: 9A

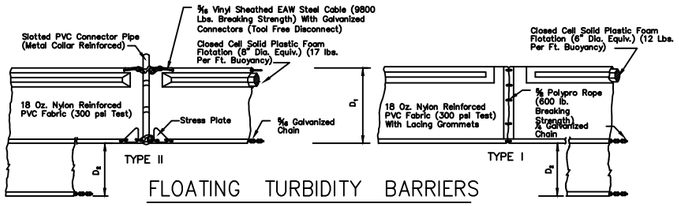

FLOATING TURBIDITY BARRIERS

NOTICE:
COMPONENTS OF TYPES I & TYPE II MAY BE SIMILAR OR IDENTICAL TO PROPRIETARY DESIGNS. ANY INFRINGEMENT ON THE PROPRIETARY RIGHTS OF THE DESIGNER SHALL BE THE SOLE RESPONSIBILITY OF THE USER. SUBSTITUTIONS FOR TYPES I AND II SHALL BE AS APPROVED BY THE ENGINEER.

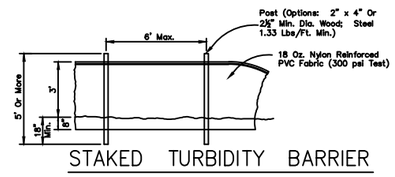

STAKED TURBIDITY BARRIER

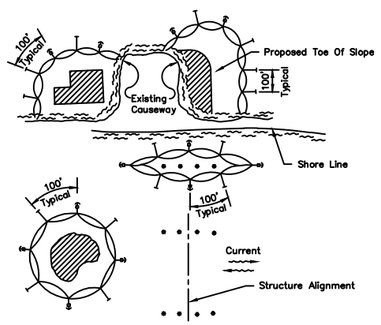

LEGEND
- Pile Locations
- Dredge Or Fill Area
- Mooring Buoy w/Anchor
- Anchor
- Barrier Movement Due To Current Action

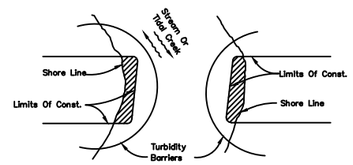

Note:
Turbidity barriers for flowing streams and tidal creeks may be either floating, or staked types or any combinations of types that will suit site conditions and meet erosion control and water quality requirements. The barrier type(s) will be at the Contractors option unless otherwise specified in the plans, however payment will be under the contract lump sum price established in the bid proposal for Erosion & Sediment Control Posts in staked turbidity barriers to be installed in vertical position unless otherwise directed by the Engineer.

NOTES:
1. Turbidity barriers are to be used in all permanent bodies of water regardless of water depth.
2. Number and spacing of anchors dependent on current velocities.
3. Deployment of barrier around pile locations may vary to accommodate construction operations.
4. Navigation may require segmenting barrier during construction operations.
5. For additional information see Section 104 of the FDOT Standard Specifications.

TURBIDITY BARRIER APPLICATIONS

TURBIDITY BARRIERS

(D-907)
N.T.S.

TOCOL Engineering, LLC
714 NORTH ORANGE AVENUE, GREEN COVE SPRINGS, FL 32043
PH: 904-215-1308 E.B. NUMBER: 26383

ENGINEER OF RECORD
JOHN J. MAHONEY III
FLORIDA
REGISTRATION NUMBER: 40177

WAREHOUSE BUILDING
FOR
MIKE REEVES

EROSION CONTROL DETAILS

REVISIONS

PLOT DATE:
DRAWN BY:
DESIGNED BY:
CHECKED BY:
SCALE:
JOB NO.:

SHEET NO.
9B

Date: 1/31/25 Time: 9:20 AM DWG Name: \\TE-GCS\01-Projects\23-627 Energy Cove Metal Buildings Mike Reeves\03-CADD\09_23-627 EROSION CONTROL DETAILS.dwg Layout: 9B

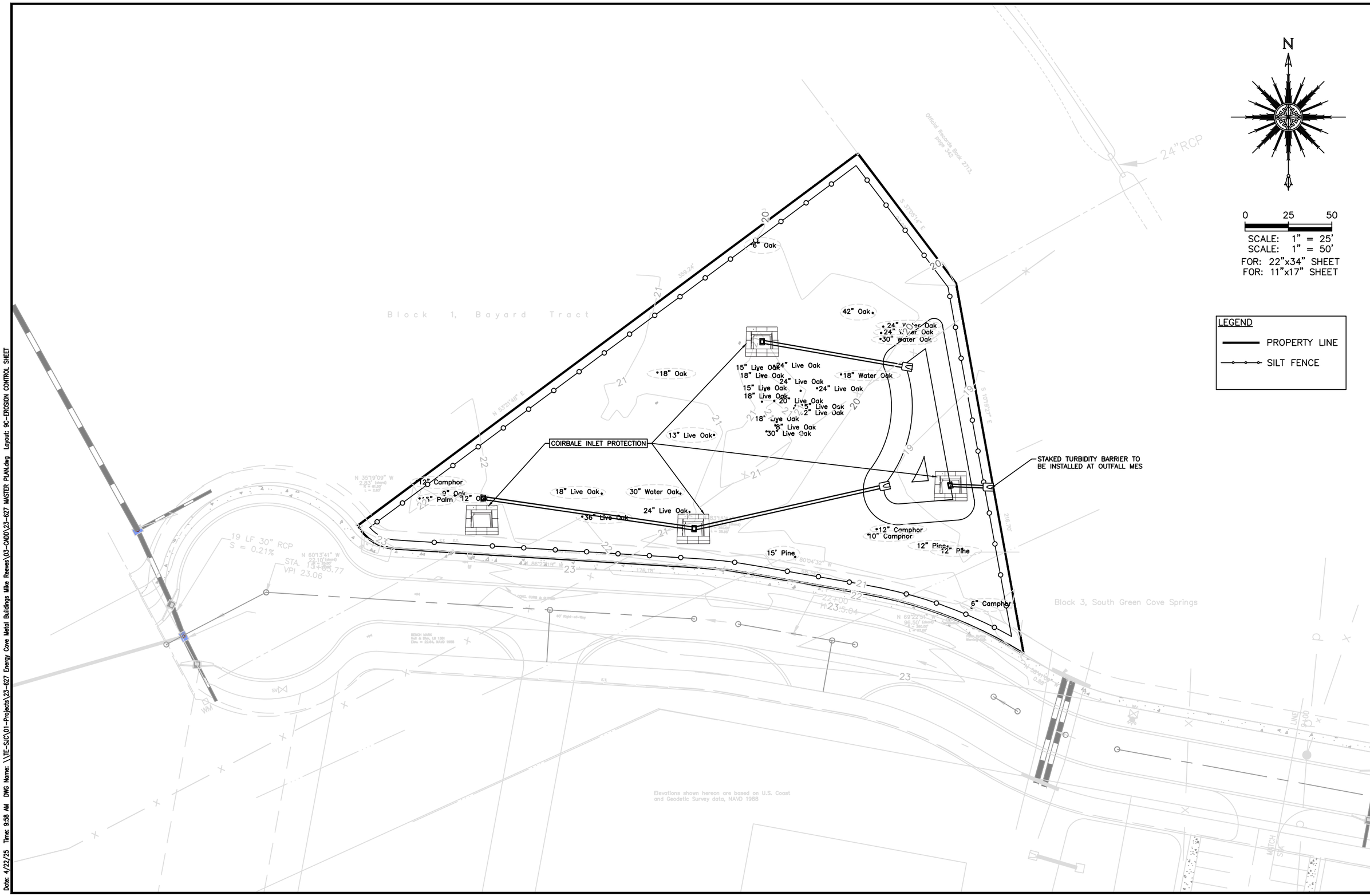

TOCOL Engineering, LLC
714 NORTH ORANGE AVENUE, GREEN COVE SPRINGS, FL 32043
PH: 904-215-1388 E.B. NUMBER: 26383

ENGINEER OF RECORD
JOHN J. MAHONEY III
FLORIDA
REGISTRATION NUMBER: 40177

WAREHOUSE BUILDING
FOR
MIKE REEVES

EROSION CONTROL DETAILS

REVISIONS

PLOT DATE:
DRAWN BY:
DESIGNED BY:
CHECKED BY:
SCALE:
JOB NO.:

SHEET NO.
9C

Date: 4/22/25 Time: 9:58 AM DWG Name: \\TE-SJC\01-Projects\23-627 Energy Cove Metal Buildings Mike Reeves\03-CADD\23-627 MASTER PLAN.dwg Layout: 9C-EROSION CONTROL SHEET

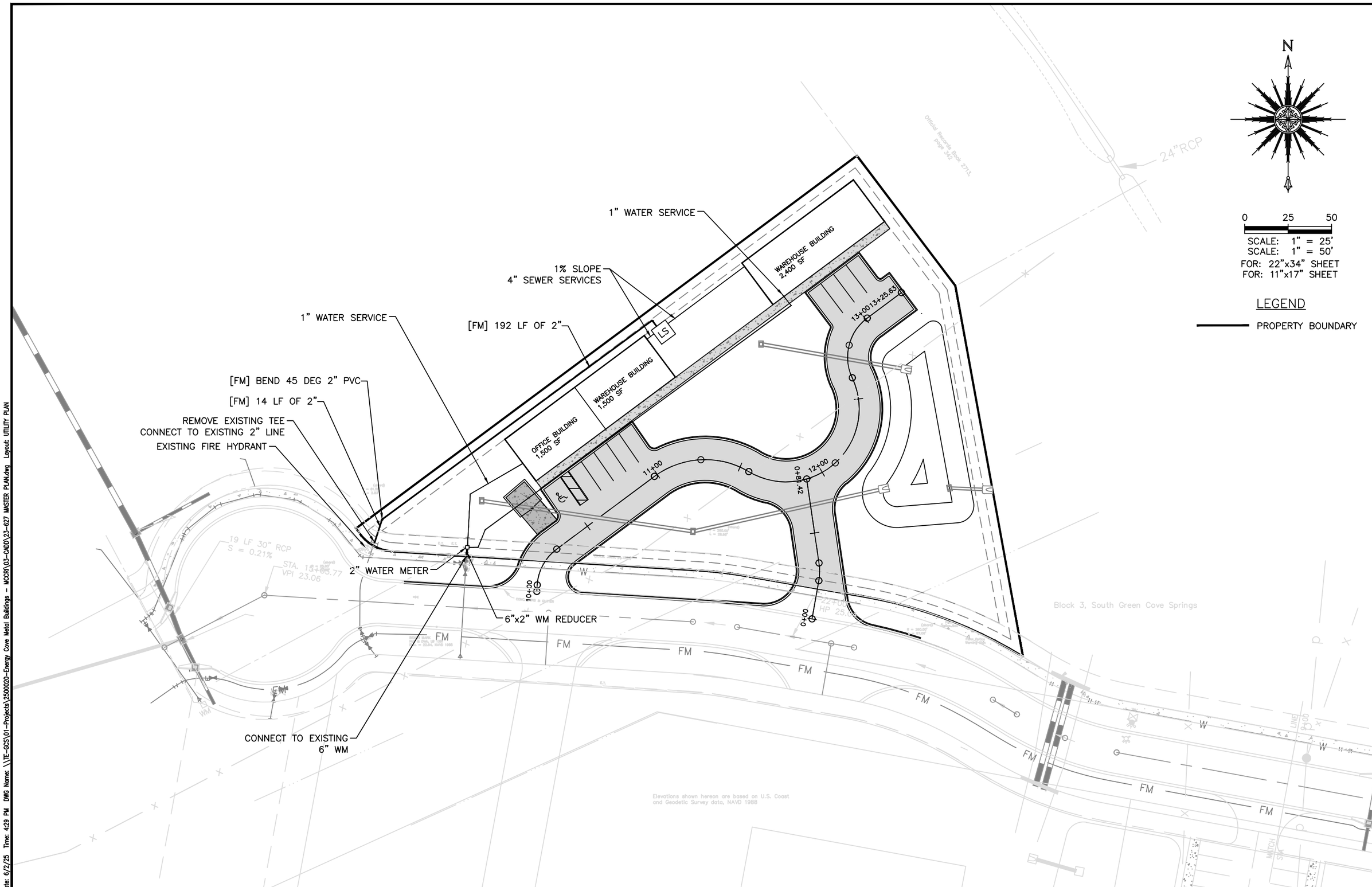

TOCOI Engineering, LLC
714 NORTH ORANGE AVENUE, GREEN COVE SPRINGS, FL 32043
PH: 904-215-1388 E.B. NUMBER: 26383

ENGINEER OF RECORD
JOHN J. MAHONEY III
FLORIDA
REGISTRATION NUMBER:
40177

WAREHOUSE BUILDING
FOR
MIKE REEVES
UTILITY PLAN

REVISIONS

PLOT DATE:
DRAWN BY:
DESIGNED BY:
CHECKED BY:
SCALE:
JOB NO.:

SHEET NO.
10

Date: 6/2/25 Time: 4:29 PM DWG Name: \\TE-GCS\01-Projects\2500020-Energy Cove Metal Buildings - MCCRI\03-CADD\23-627 MASTER PLAN.dwg Layout: UTILITY PLAN

OUTLINE SPECIFICATIONS FOR CONSTRUCTION OF SEWAGE COLLECTION SYSTEM

01. INTENTION. It is the declared and acknowledged intention to secure a new sewerage system, complete, in accordance with the plans, specifications, and contract documents. All new work shall be in accordance with the City of Green Cove Springs Specifications and Details and with C.G.C.S. Approved Materials Manual and C.G.C.S. Public Works Department Details and Specifications and any other Government Regulatory Agency. All work shall conform to the above whether or not specifically called out or noted on the plans.

02. GENERAL. All materials shall be of those listed in the C.G.C.S. Approved Materials Manual. The installation shall be warranted by the Contractor as to materials, workmanship and accuracy of the As-built drawings for a period of two years from the date of completion of the work or beneficial use of the facilities. Workmanship shall be of good quality; i.e., sewers shall be laid true to line and grade, fittings shall be properly installed and restrained, trenches shall be properly excavated and backfilled, manholes shall be installed at locations and to elevations shown on the plans.

02.1 CONTRACTOR LICENSE AND APPROVAL. Utility reserves the right to approve or deny approval of contractor prior to construction of any on-site or off-site utility facilities. Contractor must hold a State Of Florida Under Ground Utility contractors license, that named contracting company being the one doing the work on project, and demonstrate acceptable experience in the field of utility construction.

03. SURVEYS. The Utility Contractor shall provide all surveys necessary for the layout and construction of the work of his contract.

04. EARTHWORK. Earthwork shall include all excavation, fill and backfill (hand/machine), compaction and rough grading of materials encountered. No unsuitable materials clay, muck, or peat removed from pipe trenches are to be used for backfill. All fill or backfill shall be either sand or sandy clay, free of roots, trash or other debris. All backfill alongside of and to a height twenty-four inches above all pipe shall be free of clay or organic material, compacted in lifts, the first of which shall be to the spring line of the pipe by either hand or machine operation carefully to 98%. All other backfill shall be compacted by either hand or machine operation carefully to 95% (outside of paving), 98% (under paving) of its optimum moisture content as determined by ASTM D698, latest. Copies of compaction density test reports from a licensed testing agency shall be made available to C.G.C.S. if requested.

05. MANHOLES. Manhole bases, sections and cones shall conform to the requirements of ASTM C478, Specifications for Precast Reinforced Concrete Manhole Sections. Cement shall meet the requirements of ASTM C150, Specifications for Portland Cement, Type II. Concrete shall meet the minimum requirements for Class "A" Concrete Work. Minimum wall thickness shall be 1/12 the inside diameter in inches plus one (1) inch. Bases for manholes shall be cast integrally with the bottom manhole section. Joint contact surfaces shall be formed with machined castings; they shall be exactly parallel with a 2 degree slope and nominal 1/16 inch clearance with the tongue equipped with a proper recess for the installation of an O-ring rubber gasket, conforming to ASTM C443, Joints for circular Concrete sewer and Culvert pipe using Rubber gasket, or RAM-NEK premolded Plastic Joint Sealer with joints Manhole adjustment materials shall be Precast concrete adjustment rings only as manufactured by Taylor Precast Co. (or equal). Precast manhole walls shall not be coated, unless otherwise noted. Cement grout for manhole bottoms shall be a stiff rich mix of Type II Portland Cement and sharp plaster sand. Calcium chloride may be added (maximum of 2%) to aid in obtaining a faster set. At permanent pump station locations, the first upstream manhole from the station shall be lined with a polyethylene liner as manufactured and installed by Taylor Precast Co. or approved equal.

05.1 CAST IRON MANHOLE FRAMES AND COVERS. Cast iron manhole frames and covers shall be as detailed on drawings. Castings shall meet the requirements of ASTM A48, Specifications for Gray Iron Castings, Class No. 30, or Grade 65-45-12, Ductile Iron meeting the requirements of ASTM A536, Standard Specification for Ductile Iron Castings. In either case, manhole frame and cover shall be designed to withstand an HS20-44 loading defined in the AASHTO Specifications. Frames and covers shall be machined or ground at touching surfaces so as to seat firmly and prevent rocking.

05.2 FLEXIBLE MANHOLE CONNECTOR. All connections between sewer pipe and pre-cast concrete manholes shall be accomplished by a Flexible Connector, "Kor-N-Seal", as manufactured by National Pollution Control Systems, Inc. or approved equal.

05.3 FLOW CHANNELS. Flow channels in manhole base shall be formed of D.O.T. Class I, Type II cement grout with brick or rubble and trowel to a smooth surface finish. Grout surface shall be 1" min. thickness over brick or rubble. While the manholes are under construction, cut off pipes at inside face of the manhole and construct the invert to the shape and sizes of pipe indicated. All inverts shall provide a constant gradient from influent pipe to effluent pipe through manhole. Changes in direction of the sewer and entering branch or branches shall be laid out in smooth curves of the longest possible radius which is tangent to the center lines of adjoining pipelines.

05.4 DROP INLETS. Where shown on the drawings, drop inlets to the manholes shall be constructed as shown on the drawings and specified herein.

06. POLYVINYL CHLORIDE PIPE. Polyvinyl Chloride Sewer Pipe shall conform to the requirements of ASTM D-3034, SDR 26. The PVC compound conforming to ASTM D-1784. Pipe shall be clearly marked in 5 Ft. intervals or less, indicating manufacturers name, nominal size, cell classification and legend. Joints shall be push-on rubber gasketed, conforming to ASTM D-3034. Pipe and fittings shall be installed in accordance with recommended practice ASTM D-2321. Maximum depth of gravity sewer without prior approval shall be 15 feet. Sewers over 15' in depth shall be DR-18 P.V.C. pipe and shall have C.G.C.S. approval prior to design or installation of said sewer.

07. PIPE BETWEEN MANHOLES. All piping installed between manholes shall be the same material and class. No dissimilar pipe material will be allowed anywhere within a single run of pipe.

08. SANITARY SERVICE LATERALS. Sanitary service laterals shall be Polyvinyl Chloride Pipe conforming to the requirements of ASTM D-3034, SDR 26 where cover over top of pipe is 36 inches or greater. Where cover over top of pipe is less than 36 inches, specific construction conditions shall be directed by the City of Green Cove Springs. All sanitary service laterals shall be a minimum of 4'-0" deep at the right-of-way line to top of pipe. Any sanitary service lateral which must be more than 5'-0" deep shall not be installed prior to obtaining permission from the C.G.C.S. field inspector or C.G.C.S. Public Works Department. All sanitary service laterals shall be 6-inch diameter from the main to the right-of-way line with a minimum slope of 0.60% (0.6 feet per hundred feet). In single family residential developments, services shall reduce to 4" in size and terminated at the property line with a cleanout constructed of a PVC wye and bend with a maximum angle of 45 degrees (see Standard Sewer System Cleanout Detail) utilizing the proper fittings for the type of pipe specified.

09. FORCE MAINS. Force mains shall be C900 DR-18 PVC and conform to the requirements of ASTM D-1784, D-2241, D-3139 and F-477. Pipe shall be color coded and marked "FORCE MAIN" on at least two sides and at every 12" along the barrel of the pipe. Ductile iron pipe for force main service shall be polylined. Ductile iron pipe is not to be used without prior approval of the Clay County Utility Authority. Fittings shall be C110 gray iron and shall be polylined. Force mains less than 3" shall be SCH.80 PVC. All force mains shall be installed with tracer wire per C.G.C.S. standard location wire details.

09.1 LIFT STATION VALVES. Plug valves shall be Dezurik, Clow or M&H. with full port opening. Check valves shall be M&H, Mueller or American Darling.

09.2 FORCE MAIN VALVE. Gate valve, resilient seated, same as specified in Water Distribution System Specifications Section 12 below. Except valve bodies shall be gray iron. Valve box shall have the word "SEWER" cast into the cover.

09.3 FORCE MAIN JOINT RESTRAINT. All fittings shall be properly and adequately restrained against lateral movement at all force main tees, crosses, valves and bends. Restrainers shall be Uni-Flange Series 1300, 1350, 1390 or approved equal installed per manufacturer's recommendations and C.G.C.S. standand details and specifications.

09.4 FORCE MAIN PIPE FLUSHING. All force main piping shall be flushed clean with water utilizing full pipe diameter flushing for all piping up to and including 8" diameter.

10. INSTALLATION. All sewer lines, manholes, and appurtenances shall be constructed to the dimensions and elevations indicated on the drawings. Trenches shall be excavated to a width approximately twelve inches greater than the outside diameter of the pipe. Machine excavation shall be to a depth one-fourth pipe diameter above proposed pipe grade; the remaining depth shall be hand excavated and shaped to give full support to the lower one-fourth of each pipe. Each section of pipe shall be inspected for defects prior to being lowered into the trench. The inside of each bell and the outside of each spigot shall be thoroughly cleaned of all foreign matter, prior to making the joint. All sewer lines shall be constructed with the spigot ends pointing in the direction of the flow. Both the bell and the spigot of each joint shall be lubricated with the lubricant recommended by the pipe manufacturer. All sewer lines shall be cleaned of foreign matter as construction progresses, and shall be in a clean condition upon completion of construction operations. Pipe materials shall remain the same on runs between manholes and / or other structures.

11. INSPECTIONS. Each section of the completed sewer system shall be inspected for proper alignment. Inspection shall consist of "lamping" from manhole to manhole. Any section of the sewer system which does not display true, concentric alignment shall be reinstalled at no additional expense to the Owner. A written log of inspection shall be kept indicating location of test, potential problems in sewer, dips and depth of water, service locations, and other irregularities in the pipe lines. A video tape in VCR format shall be made of the television inspection and submitted to the Engineer and the City of GCS. Copies of compaction density test reports from a licensed testing agency shall be made available to City of GCS if requested.

11.1 Television inspection will be required on all new gravity sewers constructed. This service shall be provided by the Contractor as a part of this Contract. The newly constructed sewers shall be televised in the presence of the Inspector of the City of GCS. A full report as to the condition of pipe, type, depth, location of services, length, type, joint and distance between manholes, etc. shall be furnished to the City of GCS inspector prior to the final acceptance of the system. Any pipe found to be cracked, leaking or otherwise defective shall be removed and replaced with new pipe at no additional costs to the Owner. Deflection testing with 7.5% mandrel also required. Any section not passing the mandrel test shall be corrected. Sewer mains shall be televised after curb and lime rock are in place but prior to paving. Curb and limerock shall be installed, finish graded prior to televising the gravity sewer. Limerock priming and paving operations shall not take place until the City of GCS inspector has reviewed the television tape and approves the gravity sewer system. This will be strictly enforced. All gravity sewers must be flushed no sooner than 4 hours prior to any television inspection. Force main lines shall be pressure tested and approved prior to paving, but not prior to subgrade mixing operation and limerock installation, finish graded and compacted. Sewer services shall be viewed by a camera capable of viewing into service lateral connections. Adequate water must be placed within the upstream manhole to flow through the downstream manhole before inspecting with the camera. All work must be accomplished in the presence of the City of GCS inspector and a 48 hour notice must be provided. Contractor shall provide City of GCS with a 48 hr. notice of intent to televise and inspect sewer main. City of GCS inspector shall report to job site at the time specified by contractor at the time of the call-in. City of GCS inspectors will wait at the job site no more than one hour for the televising to begin before leaving the job site. Contractor shall reschedule televising giving City of GCS 48 hrs. notice if the above occurs.

11.2 TEST, INFILTRATION: After completion, the sewers or sections thereof, shall be tested and gauged for infiltration. To check the amount of infiltration, the Contractor, at no added compensation over the contract price for the sewers, shall furnish, and install and maintain a V-notch sharp crested weir in a wood frame on the main sewers as directed by the Engineer. Maximum allowable infiltration shall be 50 gallons per mile, per inch of dia. of sewer per 24 hour day at any time.

11.3 TEST, EXFILTRATION: In areas where ground water is not encountered in sewer construction, or it is desired to run exfiltration tests, the Contractor shall furnish and install all necessary materials, equipments, shall supply water, etc., and shall run exfiltration tests to determine acceptance of the sewer. The maximum allowable exfiltration shall be 50 gallons per mile per inch of diameter of sewer per 24 hour day at any time based on two foot minimum internal head.

OUTLINE SPECIFICATIONS FOR CONSTRUCTION OF WATER DISTRIBUTION SYSTEM

01. INTENTION. It is the declared and acknowledged intention to secure a new water distribution system, complete, in accordance with the plans and specifications, and contract documents. All new work shall be in accordance with C.G.C.S. Specifications and Details and Approved Materials Manual and C.G.C.S. Public Works Department Details and Specifications and any other Government Regulatory Agency. All work shall conform to the above whether or not specifically called out or noted on the plans.

02.1 CONTRACTOR LICENSE AND APPROVAL. Utility reserves the right to approve or deny approval of contractor prior to construction of any on-site or off-site utility facilities. Contractor must hold a State Of Florida Under Ground Utility contractors license, that named contracting company being the one doing the work on project, and demonstrate acceptable experience in the field of utility construction.

02. GENERAL. All materials shall be of those listed in the C.G.C.S. Approved Materials Manual. Materials shall be warranted by the Contractor as to materials, workmanship and accuracy of As-built drawings for a period of two years from the date of completion of the work or beneficial use of the facilities. Workmanship shall be of good quality; i.e., mains shall be laid in a uniform alignment, fittings shall be properly restrained, trenches shall be properly excavated and backfilled, fire hydrants and valve boxes shall be adjusted to finished grade. All water mains shall be installed with tracer wire per C.G.C.S. standard location wire details.

03. SURVEYS. The Utility Contractor shall provide all surveys necessary for the layout and construction of the work of his contract.

04. EARTHWORK. Earthwork shall include all excavation, fill and backfill (hand/machine), compaction and rough grading of materials encountered. No unsuitable materials clay, muck, or peat removed from pipe trenches are to be used for backfill. All fill or backfill shall be either sand or sandy clay, free of roots, trash or other debris. All backfill alongside of and to a height twenty-four inches above all pipe shall be free of clay or organic material, compacted by either hand or machine operation carefully to 98%. All other backfill shall be compacted by either hand or machine operation carefully to 95% (outside of paving), 98% (under paving) of its optimum moisture content as determined by ASTM D698, latest. Copies of compaction density test reports from a licensed testing agency shall be made available to C.G.C.S. if requested.

05. JOINT RESTRAINT. All fittings shall be properly and adequately restrained against lateral movement at all water main tees, crosses, valves bends and fire hydrants. Restrainers shall be Uni-Flange Series 1300, 1350, 1390 or approved equal installed per manufacturer's recommendations and C.G.C.S. Details and Specifications.

06. DUCTILE IRON PIPE. Ductile iron pipe shall conform to ANSI Specification A21.50 (AWWA C150) latest, "Thickness Design of Ductile Iron Pipe", Table 50.5, laying condition Type 2, internal operating pressure of 250 p.s.i. for an 8-foot depth of cover, Class 51 minimum and shall be ANSI A21.51 (AWWA C151), latest centrifugally cast pipe. Laying lengths shall each length clearly marked with pressure rating, thickness be 20 feet or less, class, height of pipe without lining, length, and manufacturer. Ductile iron pipe for water service shall be furnished with cement lining per AWWA C110, C115 and C151. The pipe shall have design values of 60,000 P.S.I. minimum tensile strength, and 42,000 P.S.I. minimum yield strength. Ductile iron pipe for water or service lines shall be used in any easement, right-of-way, between lots, and any instance where a building foundation or other permanent appurtenance is within 10' of the water main or a service line larger than 3".

07. DUCTILE IRON FITTINGS shall be C153 cement lined and suitable for the type and class of pipe to which connected. Gaskets shall be suitable for potable, domestic water service. Minimum working pressure shall be 150 P.S.I.

08. POLYVINYL CHLORIDE PIPE. Polyvinyl chloride pipe for water mains 4 inch in diameter and larger, shall be P.V.C. C900, DR-18, conforming to ASTM D-1784, D-2241, D-3139 and F-477, latest, and shall bear the seal of the National Sanitation Foundation. Pipe shall be color coded and marked on at least 2 sides with the word "WATER" and at every 12" along the barrel of the pipe. Couplings shall be rubber gasketed, push-on type conforming to ASTM D-2122. DR-18 shall be used for fire mains.

09. STEEL CASING PIPE. Steel casing pipe shall be of size indicated on the Drawings and shall conform to ASTM A139, with a minimum yield strength of 35,000 p.s.i.

10. POLYETHYLENE PIPE shall be SDR 9, AWWA C901, ASTM D2737, PE 3408, colored blue, NSF Seal, with Type 316 stainless steel inserts. Fittings shall be suitable for type of installation required. All piping smaller than 4" shall be Polyethylene.

11. GATE VALVES AND BOXES. Gate valves shall be non-rising stem type and shall be suitable for a 200 p.s.i. non-shock working pressure Gate valves shall be mechanical joint, flanged or screwed. Gate valves shall have a 2" operating nut and open left. Gate valves shall have joints suitable for the type of main on which installed. Valves 2" & 3" shall be iron body, bronze fitted (distribution mains only). Valves 4" and larger shall be iron body, bronze fitted with resilient seat. Valves shall be of domestic (American) manufacture and shall be A.F.C., M&H, Mueller or approved equal. Valves 16" and larger shall be AWWA C-509, M&H Valve Co. Valve boxes with screw extensions shall be provided for all gate valves. Boxes shall be of cast iron construction, 7/32" minimum wall thickness and shall be nontacky tar enamel coated. The word "WATER" shall be cast in the cover. Other ball valves 2" and smaller shall be Ford Ball Valve or Mueller with F.I.P.T.

12. WATER METER BOXES. Meter boxes for flushing hydrants and 3/4" meters shall be DFW Plastics, Inc., model DFW36C-12-3T. Meter boxes for 1" meters shall be DFW Plastics, Inc., model DFW37C-12-3T. Meter boxes for 1-1/2" and 2" meters shall be DFW Plastics, Inc., model DFW1730C-12-3T. Developer shall be responsible for installation of meter boxes on all water services as part of the water main installation. All curb stops shall be adjusted to the proper elevation and shall be accessible for the installation of the water meter. The contractor shall be required to open all boxes for the C.G.C.S. inspector at the final inspection. A treated 6'-6" fence post marker shall be painted blue for identification.

13. CURB STOPS. Curb stops shall be cast bronze, inverted key stop, roundway, with check, lock wing type, for locking in the closed position. Curb stops shall be Ford Ball Valve or Mueller.

14. CORP STOPS. Corp stops shall be cast bronze, inverted key stop, roundway, with check, lock wing type, for locking in the closed position. Corp stops shall be Ford Ball Valve or Mueller.

15. FIRE HYDRANTS. Fire hydrants shall be traffic type, 150 pound working pressure, AWWA Standard C502, latest revisions, with two 2 1/2" nozzles, one 4 1/2" nozzle and 5 1/4" main valve. Fire hydrant shall be be compression type with breakable coupling and bolts. Pipe connection shall be mechanical joint. American Flow Control, AFC B-84-B, painted red w/white bonnets and with 1 1/2" penta nuts, opening left.

16. INSTALLATION. The minimum cover over top of potable water main shall be 36" minimum. All water lines and appurtenances shall be thoroughly cleaned of all foreign matter before being lowered into the trench and shall be kept clean during laying operations by means of plugs or other approved methods. All pipe shall be checked for defects before being lowered into the trench. Defective pipe shall not be used. Pipe found to be defective, after installation, shall be removed and replaced with sound pipe at no additional expense to the Owner. The full length of each section of pipe shall rest solidly upon the pipe bed, with recesses excavated to accommodate the bells and joints. All pipe that has the grade or joint disturbed after laying shall be taken up and reinstalled. The pipe shall not be laid in water, or, when trench or weather conditions are unsuitable for the work. All joints shall be cleaned of all foreign matter before making the joint. Fittings at bends in the pipe shall be properly restrained with joint restrainers adequately sized to prevent movement and dislocating or blowing off when the line is under pressure. Service laterals shall terminate at the point noted in the details.

17. TESTS. After the pipe is laid, the joints completed, and the trench backfilled, the newly laid pipe and appurtenances shall be subjected to a Hydrostatic and Leakage test of 150 pounds per square inch for a period of at least two hours. During this period, all joints shall be inspected to determine water tightness of the system. Any leaks detected shall be corrected. Tests shall be in accordance with the C.G.C.S.'s requirements and specifications. Water main lines shall be pressure tested and approved prior to paving, but not prior to subgrade mixing operation and limerock installation, finish graded and compacted. If C.G.C.S. inspector detects the water main has been damaged during priming or paving he shall require the contractor to repair the water main and retest the water main.

18. STERILIZATION. After completion of construction and testing, the water system shall be sterilized with chlorine in accordance with AWWA Standard C651 latest, and State of Florida Department of Environmental Protection requirements before acceptance for domestic operation. The amount of chlorine applied shall be sufficient to provide a dosage of 50 parts per million or more. The chlorine solution shall remain in the system for a period of at least 8 hours, during which time every valve in the system shall remain opened and closed several times to assure contact with every surface of the system. After completion of sterilization procedures, the system shall be flushed using chlorinated water from a domestic water source having a chlorine residual of at least 1 part per million. The contractor shall obtain all bacteriological clearances as required by the Florida Department of Environmental Protection. After bacteriological clearances, the pressure in the main shall not drop below 20 P.S.I. Clearance report to be submitted to the Engineer. The contractor should be aware that there is a timing maximum related to bacteriological clearance of the main, completion of as-built drawings and Engineer / C.G.C.S. completion of Certificate of Completion. In any project where the bacteriological clearances are greater than 30 days old at the time of submittal of Certificate of Completion to F.D.E.P., the contractor may be required to pull more samples and obtain more bacteriological clearances. Prior to introducing the chlorine solution, the lines shall be thoroughly flushed with clean water utilizing full pipe diameter flushing for pipe up to and including 8" diameter. Contractor shall be responsible for dechlorination of the disinfectant water prior to any discharge to any ditch or surface waters.

19. BACTERIOLOGICAL SAMPLING. Contractor shall assure the project construction is completely finished prior to any bacteriological sampling and testing.

GENERAL NOTES

1. AS-BUILT DRAWINGS AND ASSOCIATED COSTS. All cost records pertaining to the cost of water, reclaim and sewer facilities donated to the utility shall be provided to the Utility by applicant. Prior to acceptance of any extension to the Utility's system that is completed by a licensed underground utility contractor, the Utility will require that the applicant's contractor provide the Utility, to retain for its permanent records, all field as-built data. During the daily progress of the work, the contractor's job superintendent shall record on his field set of drawings all work installed. All manholes, gravity sewers, force mains, laterals, valves, fittings, fire hydrants, etc. shall be located in two directions. One location shall be referenced perpendicular to the right-of-way lines and or property lines (preferably both) or existing permanent utility structures are acceptable (i.e. manholes, catch basins, fire hydrants, head/end walls, etc.). No power/utility poles may be used for reference. Elevations of manhole inverts and center of cover shall be shown to the nearest hundredth of a foot. Size, type, class and slope of sewer main shall be shown (i.e. 8" PVC, SDR-35). The top elevation of each manhole may be determined by measuring from a surveyed pipe invert to the final adjusted manhole top. Size, type and class of water mains, valves, fittings, fire hydrants, etc. shall be shown (i.e., 8" D.I.P., 6" gate valve). All locations where the top of the water main is less than 36" deep or more than 50" deep shall be noted on the as-builts. Water as-builts, sewer as-builts and reclaim water as-builts shall be on separate sheets. ASBUILTS SHALL BE IN NAD 1983 FL EAST-FOOT--STATE PLANE COORDINATES AND REFERENCE THE BM USED FOR THE PROJECT.

Each page of the as-built drawings shall bear the name, date and original signature of the general contractor responsible for the Work and the name, date, original signature and seal of the registered land surveyor or registered professional engineer who provided the horizontal and vertical dimensions and elevations on the as-built drawing. The signatures shall certify that the as-built drawings do, in fact, reflect the true as-built conditions as located under the direct supervision of the registered surveyor and/or professional engineer. The as-builts shall be at the contractor's expense. A copy of the AutoCAD® ASBUILT DATA SHALL BE FURNISHED ON COMPACT DISK (CD) PLUS (2) SIGNED FULL SIZE PRINTED SET PLUS (1) MYLAR SET by either the design engineer or the applicant's contractor.

2. CONSTRUCTION WARRANTY AND WARRANTY SECURITY PERIOD. Developer shall warranty Utility against defects in material and workmanship for the portion of the onsite system to be owned by the Utility. Developer shall secure from its Contractor a written and fully assignable warranty that the system installed will be and remain free from all defects, latent or otherwise with respect to workmanship. materials, installation, and accuracy of his as-built drawings in accordance with the Utility approved plans and specifications for a period of two years from the date of the system acceptance by the Utility and immediately assign the same and the right to enforce the same to Utility on or before the date of the Utility's acceptance of the system for ownership and maintenance.

3. CLEAN-UP. All surplus materials of construction shall be removed from the site and disposed of by the Contractor as part of his contract with the owner.

4. RESTORATION. New Sanitary Sewer and Water Main Construction in earthen areas shall be seeded and mulched in accordance with Section 570 of Standard Specifications of the Florida Dept. of Transportation (latest edition). In locations where existing grassed (sodded) areas are disturbed, sod shall be replaced to preconstruction condition and to limits of construction or where directed by the engineer.

5. PERMITS. The Contractor shall be responsible for obtaining all permits required for performing work under this contract, except that the F.D.E.P. permits, and wetland permits, if required, will be secured by the owner or developer.

6. PIPE BEDDING. In the event unsuitable or unstable bedding material is encountered at or below the limits of the excavation required for installation, such material shall be removed and replaced with suitable compacted backfill material specified by the design engineer and approved by the C.G.C.S so as to provide a stable trench bedding surface suitable for proper pipe installation.

6-A. Pipe Bedding (Rock Bedding Material) Rock material used for pipe bedding shall be #57 stone or crushed concrete (crush-crete) in a #57 size. Rock bedding material shall be completely wrapped in a heavy filter fabric material, overlapped a minimum of one foot, rock bedding shall be installed to the correct grade and compacted to a density which will prevent any settlement, either by mechanical tamping equipment or by compressing the rock using the bottom of the backhoe bucket. The compaction shall be approved by C.G.C.S. inspector. The contractor shall be required to have submittal approved by design engineer and C.G.C.S. prior to use of such rock bedding material.

7. DEWATERING. The contractor shall at all time during construction provide ample means and equipment with which to promptly remove and dispose of all water entering the trench and structure excavations and shall keep said excavations acceptably dry until the piping and / or structures to be built therein are completed. All water pumped or drained from the work area shall be disposed of in a manner as to not damage sewer, water, electrical or any other piping, structures or property. No pipe shall be laid in water and no water shall be allowed to rise above the bottom of any pipe while it is being jointed, except as may be approved in writing by the C.G.C.S.

8. HYDROSTATIC TESTING. After all pressure pipes (water mains, services, and force mains) are laid, the joints completed, and the trench backfilled, the newly laid pipe and appurtenances shall be subjected to a hydrostatic test of 150 P.S.I. for a period of at least two hours. The engineer and the C.G.C.S. Public Works must be notified 48 hours before a test is to be performed. Test shall be as set forth in AWWA standard C600. Any leaks detected shall be corrected and the section of pipeline retested. The two hour test period shall begin when all joints have been determined to be water tight. Leakage shall be limited to that allowance set forth in Section 4 of AWWA Standard C600-87. Hydrostatic and leakage test and blow-down (zeroing of gage) must occur before sampling for bacteriological test. The maximum allowable pressure loss is 5 P.S.I. regardless of the length of pipe.

9. REPORTS. Reports of hydrostatic and leakage tests and sterilization of the newly completed systems shall be submitted to the C.G.C.S. prior to requesting acceptance of the system.

10. DENSITY TESTING. In-place density tests are required at intervals not to exceed 150' along pipelines for every other lift. A minimum of one test between manholes is required for every other lift regardless of the distance between sanitary sewer manholes.

11. CONCRETE. All Portland Cement concrete shall be of Type II Portland Cement, 2,500 P.S.I. minimum, ready mixed. All concrete shall be placed before the initial set has taken place. Stale or retempered concrete shall not be used.

12. GATE VALVES AND BOXES. Gate valves shall have a 2" operating nut and open left. Gate valves shall have joints suitable for the type main on which installed. Valves 2" and 3" shall be iron body, bronze fitted. Valves 4" and larger shall be iron body, bronze fitted with resilient seat. The word "WATER" on water boxes and "SEWER" on force main boxes shall be cast in the covers.

13. SEPARATION OF WATER AND SEWER MAINS. Horizontal and vertical separation between potable water system mains and or appurtenances and sanitary or storm sewers, wastewater or storm water force mains, and reclaimed water mains shall be in accordance with Rule 62-555.314 FAC.

(a) New or relocated, underground water mains shall be laid to provide a horizontal distance of at least three feet between the outside of the water main and the outside of any existing or proposed storm sewer, storm water force main, reclaimed water main regulated under Part III of Chapter 62-610, F.A.C, or proposed vacuum-type sanitary sewer.

(b) New or relocated, underground water mains shall be laid to provide a horizontal distance of at least six feet, and preferably ten feet, between the outside of the water main and the outside of any existing or proposed gravity- or pressure-type sanitary sewer, wastewater force main, or pipeline conveying reclaimed water not regulated under Part III of Chapter 62-610, F.A.C. The minimum horizontal separation distance between water mains and gravity-type sanitary sewers shall be reduced to three feet where the bottom of the water main is laid at least six inches above the top of the sewer.

(c) New or relocated, underground water mains crossing any existing or proposed gravity- or vacuum-type sanitary sewer or storm sewer shall be laid so the outside of the water main is at least six inches, and preferably 12 inches, above or at least 12 inches below the outside of the other pipeline. However, it is preferable to lay the water main above the other pipeline.

(d) New or relocated, underground water mains crossing any existing or proposed pressure-type sanitary sewer, wastewater or storm water force main, or pipeline conveying reclaimed water shall be laid so the outside of the water main is at least 12 inches above or below the outside of the other pipeline. However, it is preferable to lay the water main above the other pipeline.

(e) At the utility crossings described in paragraphs (c) and (d) above, one full length of water main pipe shall be centered above or below the other pipeline so the water main joints will be as far as possible from the other pipeline. Alternatively, at such crossings, the pipes shall be arranged so that all water main joints are at least three feet from all joints in vacuum-type sanitary sewers, storm sewers, storm water force mains, or pipelines conveying reclaimed water regulated under Part III of Chapter 62-610, F.A.C., and at least six feet from all joints in gravity- or pressure-type sanitary sewers, wastewater force mains, or pipelines conveying reclaimed water not regulated under Part III of Chapter 62-610, F.A.C.

14. NEW CONNECTION TO EXISTING MAIN. New connection to existing main in service shall be accomplished by the "wet tap" method utilizing full circle stainless steel tapping sleeve and mechanical joint tapping valve. Tapping sleeve shall be rated at 200 P.S.I., non-shock working pressure conforming to AWWA Standard C110, latest revision. Stainless steel tapping sleeves shall be from those listed in C.G.C.S. approved material manual. Tapping valve shall be mechanical joint one end and standard flanged joint on other end. Valve shall conform to Section 12. of these specifications.

15. JOBSITE SAFETY. While on the job site, the contractor shall at all times observe all Federal, State and local safety rules, regulations and laws. This includes, but not limited to, confined spaces and excavation protection systems as per O.S.H.A. standards.

GENERAL NOTES

16. CLOSE OUT / COMPLETION. Minimum items required for Close Out / Completion for submittal to the City of Green Cove Springs will include:
(a.) Construction Warranty from Developer in the form of a Bond, Letter of Credit or Cashier's Check for a two-year period.
(b.) Warranty Certificate for a two-year warranty from the contractor to the Developer and assignment of same to the City of Green Cove Springs (C.G.C.S.).
(c.) Developer's Affidavit certifying there is no outstanding debt against utility assets to be deeded to C.G.C.S.
(d.) Value of Acceptance Report showing value of assets to be deeded to the C.G.C.S.
(e.) Bill of Sale to C.G.C.S.
(f.) Bacteriological Test(s)
(g.) Pressure Test(s)
(h.) Television Reports and Tapes
(i.) Density Reports
(j.) PROPER Final As-Built Drawings and disks

17. C.G.C.S. Shop Drawing and Submittal Process. A signed acknowledgment by the Contractor and the Material Supplier, on the "Shop Drawings and C.G.C.S.'s Approved Materials List Form", that all materials will be in accordance with C.G.S.S.'s Specifications, C.G.C.S.'s Details and C.G.C.S.'s Approved Materials Manual, is the only submittal C.G.C.S. will require for each item of materials with the following exception: any alternate materials requested by the Engineer; any materials not listed in the C.G.C.S. Materials Manual; and materials associated with pumping stations and plant installations. Those exceptions shall have an individual shop drawing submitted for C.G.C.S.'s review and approval prior to any installation of said materials.

This is C.G.C.S.'s procedure and it does not preclude the design engineer from requiring additional submittals and shop drawings as he deems necessary for the project.

18. PUMP STATIONS (TEMPORARY OR PERMANENT). All pump stations shall be constructed in accordance with C.G.C.S. standards, rules and regulations and be approved by C.G.C.S. All work and materials shall meet the requirements of C.G.C.S. Standard Pump Station Details and Specifications or the plans, details and specifications for that specific pump station. A driveway shall be provided from the street (roadway) to within 2 feet of the pump station wetwell, minimum 10 feet wide x 5 inches thick 3,000 P.S.I. concrete. Submersible pump stations shall be fenced completely about the perimeter of the pump station site (location of the pump station site as noted on the plans), including gates and all other items required to make a completely fenced installation. The entire pump station site within the fenced area shall be covered with #57 stone, 6 inch thick minimum, placed over 8 mil visqueen.

19. Information shown on the Drawings as to the location of existing utilities has been prepared from the most reliable data available to the Engineer. The Contractor shall be responsible for requesting underground utility locates and shall assist the utility companies, by every means possible to determine said locations and the locations of recent additions to the systems not shown. Extreme caution shall be exercised to eliminate any possibility of any damage to utilities resulting from Contractor's activities. The locations of all overhead utilities shall also be verified by the Contractor. The Engineer shall be notified of any conflict that may occur. The Contractor shall be responsible for determining which poles will need shoring during excavation and shall provide such shoring and support as required.

20. C.G.C.S. details and specifications (latest available copy) shall be included in all plans submitted for work within the C.G.C.S. utility system. No person shall modify, change, omit, replace any portion of those details and specifications without the express written consent of C.G.C.S.. In any instance where the design engineer has included his written specifications or details in the plans then the more stringent of the two shall govern.

21. All materials to be used for any project within C.G.C.S.'s utility system shall conform to those materials listed in the C.G.C.S. approved material manual in effect at the time final plans for that project are approved by C.G.C.S.

22. Under no circumstance shall any trees be planted within a C.G.C.S. utility easement without;
a.) C.G.C.S. approving landscape and irrigation plans.
b.) C.G.C.S. being notified prior to the planting of trees and giving approval.
c.) C.G.C.S. inspecting the installation of root barrier material (required at all trees which are closer than 10' to any C.G.C.S. utility line) as shown in C.G.C.S. approved material manual and C.G.C.S. roadway cross section details, whether or not shown on the plans.

23. At all Jack & Bore locations a C.G.C.S. inspector shall inspect the casing spacers to verify they are the correct size and have been installed correctly on the pipe prior to the pipe being installed into the pipe casing. The pipe casing shall be clean and free of all dirt, and shall be cleaned with a Vac-Con if necessary. A C.G.C.S. inspector shall be present at all time during this work.

FINAL INSPECTION PROCEDURES

PRIOR TO FINAL INSPECTION, THE CONTRACTOR shall PROVIDE THE FOLLOWING:
1. The sewer line T.V. report and tape
2. The pressure test and bacteriological clearance analysis report.
3. The engineer of record certification to D.E.P. This can be done with completed as-builts.
4. Completed as-builts showing at least the following:
a.) Location of valves, mains, services, manholes and locate wire boxes.
b.) Elevation of sewer lines in the manhole, and stub-outs.
5. All services and valves to be plainly marked with a treated fence post, and electronic locate marker when needed.
6. Pump station start-up report with draw down data for each pump and with both pumps in operation. All electrical components to be completely installed and in proper working condition.

PRIOR TO FINAL ACCEPTANCE FOR OWNERSHIP, THE FOLLOWING MUST BE COMPLETED:
1. All manhole rings and covers have to be adjusted to finish grade.
2. Water services must be lowered and meter boxes installed, valve boxes must be set on all gate valves.
3. As-built drawings shall have been updated to accommodate the C.G.C.S. comments and the final elevation of the manhole tops must be included.
4. All valves, locate wire boxes, sewer, water and reclaimed services shall be scribed in curb and painted the correct color.
5. As-builts, must be accepted and approved by the City of Green Cove Springs Public Works.

PRIOR TO FINAL ACCEPTANCE FOR OWNERSHIP, THE FOLLOWING MUST BE COMPLETED:
1. A preliminary inspection must be coordinated by the underground utility contractor and held a minimum of fifteen (15) working days prior to the final inspection/start-up. The preliminary inspection will compare the approved design drawings to the actual site installation, noting any deficiencies.
2. The following must be represented at the preliminary and final inspection:
a.) The C.G.C.S.'s inspection and distribution and collection departments
b.) The project's developer and/or general contractor
c.) The underground utility contractor
d.) All subcontractors associated with the lift station (electrical, pump manufacturer, control panel manufacturer, etc.)

NO	DATE	BY	REVISION DESCRIPTION
1	FEB. 2016	SS	GENERAL UPDATE

DESG ____
DRWN ____
CHKD ____
APRV ____
DATE ____

PROJECT: STANDARD WATER AND SEWER SYSTEM
TECHNICAL SPECIFICATIONS

CITY OF
GREEN COVE SPRINGS
321 WALNUT STREET
GREEN COVE SPRINGS, FLORIDA 32043

ACAD FILE NAME
SPECIF_D.DWG
SHEET NO.
1 OF 1

TOCOI Engineering, LLC
714 NORTH ORANGE AVENUE, GREEN COVE SPRINGS, FL 32043
PH: 904-215-1388 E.B. NUMBER: 26383

ENGINEER OF RECORD
JOHN J. MAHONEY III
FLORIDA
REGISTRATION NUMBER:
40177

WAREHOUSE BUILDING
FOR
MIKE REEVES

GREEN COVE SPRINGS UTILITY DETAILS

REVISIONS

PLOT DATE:
DRAWN BY:
DESIGNED BY:
CHECKED BY:
SCALE:
JOB NO.:

SHEET NO.
11A

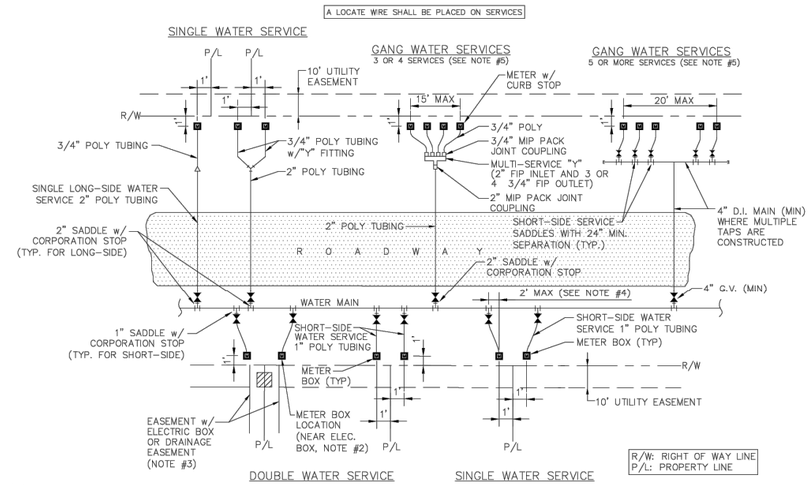

NOTES

1. THE SKETCHES ABOVE INDICATE TYPICAL WATER SERVICE AND METER BOX LOCATIONS. ACTUAL LOCATIONS OF BOXES MAY VARY SLIGHTLY ACCORDING TO FIELD CONDITIONS ENCOUNTERED. TYPICALLY, THE METER BOX SHALL BE LOCATED 1.0' OFF OF THE R/W LINE.

2. UNLESS SPECIFIED OTHERWISE BY THE CITY OF GREEN COVE SPRINGS, THE METER BOX SHALL BE LOCATED 1.0' OFF OF THE R/W LINE, AND 1.0' FOOT INSIDE OF THE PROLONGATION OF ONE OF THE SIDE PROPERTY LINES. IF A CONFLICT EXISTS WITH OTHER UTILITIES, THE METER BOX MAY BE ADJUSTED TO FOUR FEET (MAX.) INSIDE PROPERTY LINES (IN LIEU OF 1.0' FEET). UNLESS APPROVED OTHERWISE BY THE CITY, THE WATER METER BOX SHALL BE LOCATED IN NON-TRAFFIC AREAS (NOT IN SIDEWALKS OR DRIVEWAYS). IF AN UNAPPROVED METER BOX IS IDENTIFIED BY THE CITY, THEN THE CONTRACTOR OR CUSTOMER SHALL BE RESPONSIBLE FOR THE COST OF RELOCATING ANY METER BOX WHICH IS LOCATED IN THE SIDEWALK OR DRIVEWAY OR THE COST TO PROVIDE THE CORRECT METER BOX. THE CITY SHALL APPROVE ALL DEVIATIONS TO THE ABOVE PRIOR TO CONSTRUCTION.

3. IF DRAINAGE OR OTHER EASEMENT IS LOCATED BETWEEN LOTS, METER BOXES SHALL BE LOCATED AT THE EASEMENT LINE BUT OUTSIDE THE EASEMENT AREA.

4. FOR SINGLE SERVICES, THE HORIZONTAL DISTANCE (PERPENDICULAR TO THE MAIN) BETWEEN THE SERVICE'S SADDLE AND THE METER BOX SHALL BE 2 FEET MAXIMUM. FOR DOUBLE 3/4"SERVICES, THE 2"POLY MAIN SHALL BE LOCATED CENTERED BETWEEN THE TWO METER BOXES. LOCATE WIRE IS REQUIRED ON ALL SERVICES. THE WIRE SHALL RUN FROM THE METER BOX TO THE MAIN (WITH NO CONNECTION TO MAIN WIRE WITH THE LAST 24 INCHES STRIPPED OF INSULATION/BARE WIRE AS GROUND). ALL EXCEPTIONS TO THIS REQUIREMENT MUST BE APPROVED BY THE CITY OF GREEN COVE SPRINGS. THIS WILL ASSIST IN LOCATING EXISTING SERVICE LINES IN THE FUTURE.

5. GANG WATER SERVICES: FOR 3 OR 4 SERVICES IN ONE AREA, A DUCTICLE IRON PIPE (D.I.P.) WATER MAIN EXTENSION W/LOCATE WIRE MAY BE UTILIZED ON EITHER SHORT-SIDE OR LONG-SIDE SERVICES WHERE SHOWN ON THE DRAWINGS. LOCATE WIRE SHALL EXTEND FROM ONE METER BOX TO CURB STOP AT WATER MAIN. FOR 5 OR MORE SERVICES IN ONE AREA, A WATER MAIN EXTENSION W/LOCATE WIRE MAY BE UTILIZED ON EITHER SHORT-SIDE OR LONG-SIDE SERVICES WHERE SHOWN ON THE DRAWINGS (TAPS STAGGERED AND AT 2 FEET ON CENTER (MIN). FOR WATER SUPPLY HEADERS WHERE 5 OR MORE TAPS ARE CONSTRUCTED, THE HEADER PIPE SHALL BE 4" AT A MINIMUM. EXAMPLE: CONSTRUCT A 4" MAIN D.I. CROSSING THE STREET FOR 5 RESIDENTIAL CUSTOMERS, UTILIZING 4" G.V., 4" PIPE, 4"X1" SADDLES AND 1" CURB STOPS (NO GLUED TEE FITTINGS). THE 4" OR LARGER D.I.P. WATER MAIN MUST BE SIZED AND DESIGNED BY THE ENGINEER.

6. ALL COMMERCIAL WATER SERVICES SHALL BE 2" POLYETHYLENE PIPING CONNECTED TO 2" CURB STOP IN METER BOX, UNLESS OTHERWISE APPROVED BY THE CITY.

WATER SERVICE INSTALLATIONS 2" AND SMALLER METER

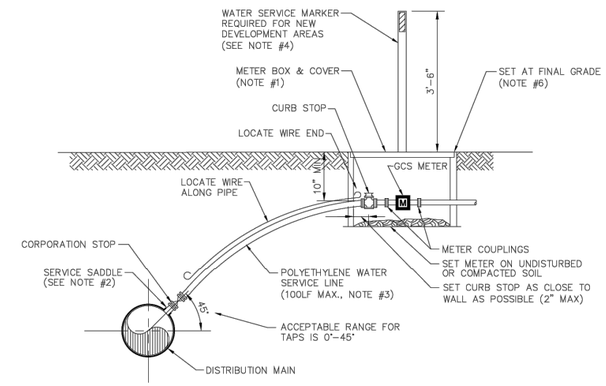

NOTES

1. SEE CITY OF GREEN COVE SPRINGS APPROVED MATERIALS MANUAL AND SYSTEM DETAILS FOR REQUIREMENTS.

2. SINGLE BAND SADDLES MAYBE UTILIZED ON NEW 1" WATER SERVICES WHICH ARE INSTALLED ON A DRY 10" SIZE OR SMALLER WATER MAIN (NEW WATER MAIN CONSTRUCTION). FOR WET TAPS OR WATER MAINS 12" SIZE AND LARGER, A DOUBLE BAND SADDLE IS REQUIRED.

3. NO OPEN CUT UNDER ROADWAY PAVING ALLOWED UNLESS THE ROADWAY IS BEING RECONSTRUCTED OR IF DIRECTED OTHERWISE BY CITY OF GREEN COVE SPRINGS. CONSTRUCT POLY LINE WITH 36" (MIN.) COVER UNDER ROADWAYS. THE POLY WATER SERVICE LINE SHALL BE SAME SIZE AS THE METER (3/4" MINIMUM) AND BE INSTALLED PERPENDICULAR TO THE MAIN AND NOT EXCEED 100LF UNLESS OTHERWISE APPROVED BY CITY OF GREEN COVE SPRINGS.

4. INSTALL PVC PLUG IN ALL CURB STOPS IF WATER SERVICE IS "NOT IN USE" (I.E.: IF NO METER IS INSTALLED). IN ADDITION, INSTALL A 6', 6" P.T. FENCE POST (TOP PAINTED BLUE) 12" OFF SIDE OF METER BOX. THE REMOVAL OR TRANSFER OF A WATER SERVICE SHALL INCLUDE BRASS METER COUPLINGS (HEX ON BARREL TYPE).

5. THE CONTRACTOR SHALL BE RESPONSIBLE FOR THE REPAIR OR REPLACEMENT OF THE BOXES, METERS OR ELECTRONIC DEVICES IF DAMAGED BY THE CONTRACTOR DURING THE CONSTRUCTION PERIOD.

6. METER BOX AND TOP SHALL BE CLEAR OF ALL DEBRIS TO ALLOW FULL ACCESS TO BOX (I.E., NO DIRT, TRASH OR OTHER DEBRIS PLACED ON TOP OF BOX).

7. LOCATE WIRING REQUIRED ON ALL LONG AND SHORT SERVICES.

WATER SERVICE DETAIL- 2" AND SMALLER METER

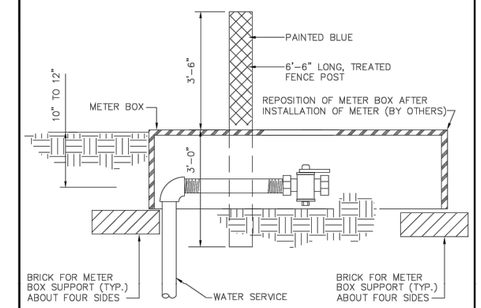

WATER SERVICE MARKER POST

NOTE:
ALL SERVICES ARE TO BE CLEARLY MARKED BY A TREATED 6'-6" LONG MARKER POST PAINTED BLUE. ALL SERVICES ARE TO BE EXTENDED ABOVE GRADE UNTIL COMPLETION OF ALL GRADING ACTIVITIES. ONCE FINAL ROAD GRADING IS COMPLETE, LOWER SERVICES BY CUTTING OFF RISER 10" TO 12" BELOW FINAL GRADE AND INSTALL 90° BEND, NIPPLE AND LW BALL VALVE AT THAT ELEVATION. SET METER BOX OVER ENTIRE HORIZONTAL SECTION OF SERVICE LINE FROM LAST 90° BEND TO THE END OF THE CURB STOP. BOX TO BE REPOSITIONED WHEN THE METER IS INSTALLED. MARKER POST TO BE INSTALLED ADJACENT TO AND LOCATED AT THE MID SECTION OF THE METER BOX.

NOTE:
MIN. WALL THIKNESS: .25"
DOUBLE WALL BODY w/STRUCTURAL SUPPORT RIBS
w/MIN. THINCKNESS: 3/16"
1" BOTTOM FLANGE
BOX IS INJECTED MOLDED STRUCTURAL FOAM RECYCLED POLYPROPYLENE MATERIAL

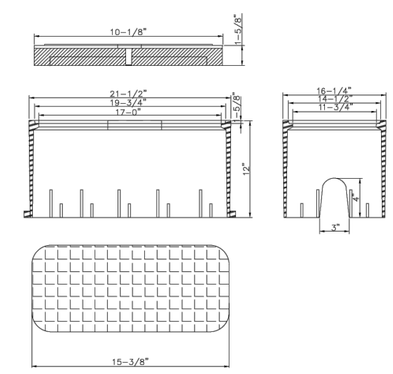

METER BOX & SOLID BLUE LID

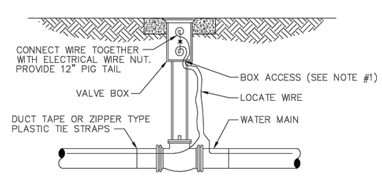

LOCATE WIRE BOX UTILIZING VALVE BOX

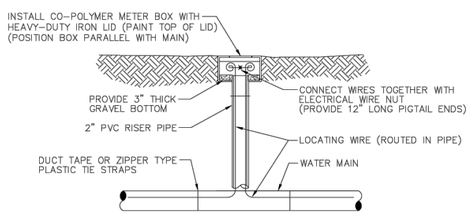

LOCATE WIRE BOX UTILIZING METER BOX

NOTES

1. LOCATE WIRE SHALL ENTER THE VALVE BOX THROUGH A "V" CUT IN THE 6" PVC RISER PIPE.

LOCATE WIRE BOX

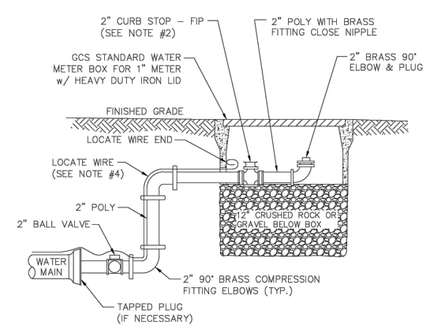

NOTES

1. PIPE SHALL BE POLYETHYLENE. FITTINGS SHALL BE BRASS.
2. THE 2" CURB STOP SHALL BE ALL BRONZE. FITTINGS SHALL BE BRASS.
3. CANNOT BE PLACED UNDER CONCRETE OR PAVEMENT.
4. PLACE 2 FEET PAST LAST WATER MAIN SERVICE CONNECTION.

FLUSHING VALVE BELOW GRADE

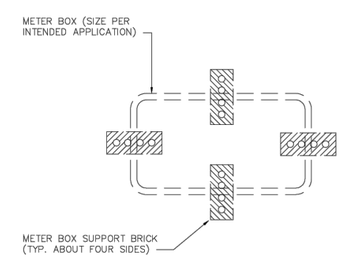

METER BOX SUPPORT DETAIL

NO	DATE	BY	REVISION DESCRIPTION
1	FEB.2016	SS	GENERAL UPDATES

DESG
DRWN
CHKD
APRV
DATE

PROJECT:
STANDARD WATER SERVICE DETAILS

CITY OF GREEN COVE SPRINGS
321 WALNUT STREET
GREEN COVE SPRINGS, FLORIDA 32043

ACAD FILE NAME
SERVICES.DWG
SHEET NO.
1 OF 1

TOCOL Engineering, LLC
714 NORTH ORANGE AVENUE, GREEN COVE SPRINGS, FL 32043
PH: 904-215-1308 E.B. NUMBER: 26383

ENGINEER OF RECORD
JOHN J. MAHONEY III
FLORIDA
REGISTRATION NUMBER:
40177

WAREHOUSE BUILDING
FOR
MIKE REEVES
GREEN COVE SPRINGS UTILITY DETAILS

REVISIONS

PLOT DATE:
DRAWN BY:
DESIGNED BY:
CHECKED BY:
SCALE:
JOB NO.:

SHEET NO.
11B

Date: 1/30/25 Time: 4:55 PM DWG Name: \\TE-SJC\01-Projects\23-627 Energy Cove Metal Buildings Mike Reeves\03-CADD\23-627 GCS UTILITY DETAILS.dwg Layout: 11B
M:\CAD Files\Green Cove Springs\89051915\Standard Utility Details\11-01-2017\SERVICES.dwg, 11/7/2017 1:19:15 PM

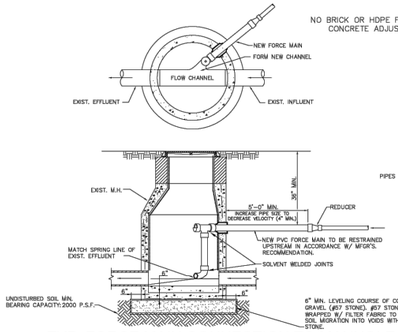

TYP. FORCE MAIN CONNECTION TO MANHOLE

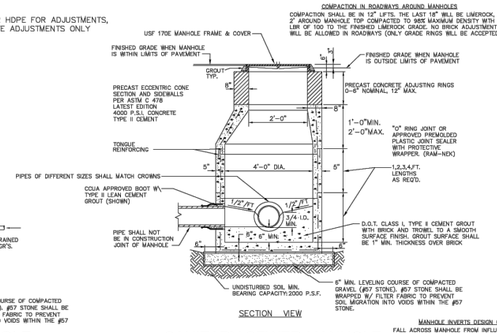

SANITARY SEWER MANHOLE

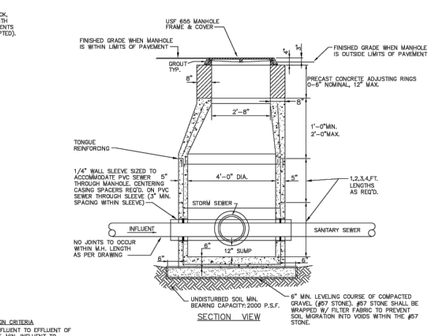

STORM CONFLICT MANHOLE

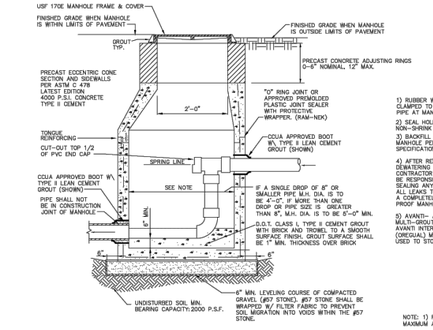

NOTE: FOR ADDITIONAL MANHOLE SPECIFICATIONS, SEE "SANITARY SEWER MANHOLE" DETAIL THIS SHEET. MAXIMUM ALLOWABLE DIFFERENCE IN INVERT ELEVATION WITHOUT INTERNAL DROP CONNECTION IS 24". SEE "ELEVATION DIFFERENCE ACROSS MANHOLE" THIS SHEET.

TYPICAL GRAVITY SEWER DROP PIPE CONNECTION TO MANHOLE

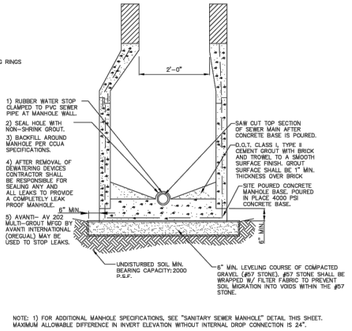

NOTE: 1) FOR ADDITIONAL MANHOLE SPECIFICATIONS, SEE "SANITARY SEWER MANHOLE" DETAIL THIS SHEET. MAXIMUM ALLOWABLE DIFFERENCE IN INVERT ELEVATION WITHOUT INTERNAL DROP CONNECTION IS 24".

SADDLE MANHOLE DETAIL

THIS DETAIL IS ONLY TO BE USED WITH SPECIFIC APPROVAL BY CITY OF GCS.

NOTE: 1. THIS MANHOLE AND THE NEXT TWO MANHOLES DOWNSTREAM (AS REQUIRED BY UTILITY) ARE TO HAVE POLYETHYLENE LINER AS MANUFACTURED BY STANDARD PRECAST CO. (AGRU SURE GRIP) OR APPROVED EQUAL.
2. IF CONNECTION IS BEING MADE TO AN EXISTING MANHOLE, THAT MANHOLE AND THE NEXT TWO MANHOLES DOWNSTREAM (AS REQUIRED BY UTILITY), SHALL BE LINED WITH "SPECTRASHIELD" OR APPROVED EQUAL.
3. SIZE OF DROP PIPE CONNECTION TO MANHOLE SHALL BE DESIGNED BY THE PROJECT ENGINEER. MINIMUM SIZE SIZE SHALL BE 4". CONNECTION AND DROP PIPE SHALL BE SIZED TO REDUCE THE VELOCITY AND PREVENT "SPLASHOVER" WITHIN THE MANHOLE. 5'-0" MINIMUM DISTANCE FROM MANHOLE TO REDUCER MAY BE INCREASED TO ASSIST IN THIS VELOCITY REDUCTION.

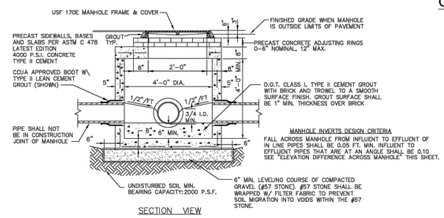

SHALLOW SANITARY SEWER MANHOLE

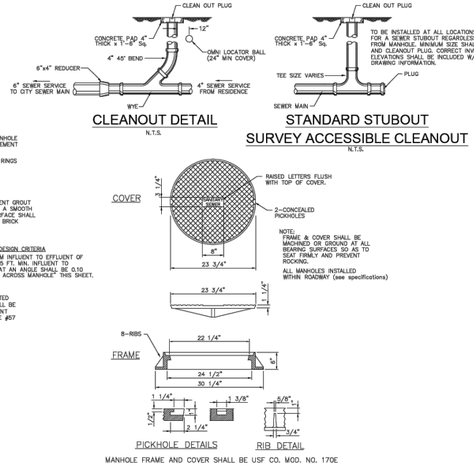

MANHOLE FRAME AND COVER SHALL BE USF CO. MOD. NO. 170E

CLEANOUT DETAIL

N.T.S.

STANDARD STUBOUT

SANITARY SEWER MANHOLE FRAME & COVER

SURVEY ACCESSIBLE CLEANOUT

N.T.S.

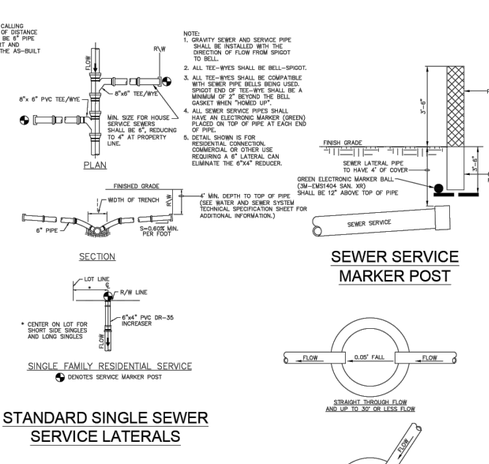

STANDARD STUBOUT

SURVEY ACCESSIBLE CLEANOUT

N.T.S.

STANDARD SINGLE SEWER SERVICE LATERALS

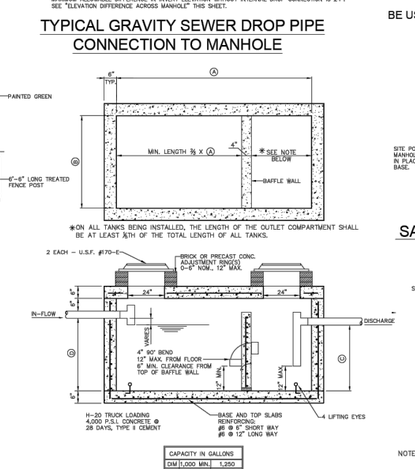

SEWER SERVICE MARKER POST

ELEVATION DIFFERENCE ACROSS MANHOLE

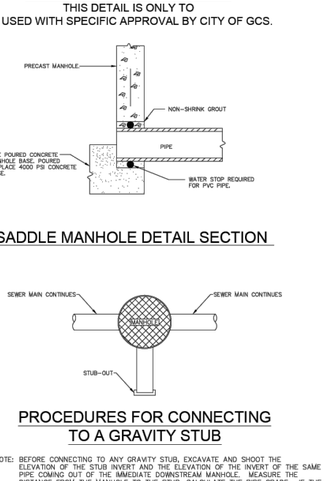

*ON ALL TANKS BEING INSTALLED, THE LENGTH OF THE OUTLET COMPARTMENT SHALL BE AT LEAST 1/4TH OF THE TOTAL LENGTH OF ALL TANKS.

SADDLE MANHOLE DETAIL SECTION

2" SEWAGE FORCE MAIN MANIFOLD SERVICE CONNECTION DETAIL FOR MEDIUM TO HIGH PRESSURE CONNECTION SYSTEMS

CONCRETE CAP FOR SEWER PIPES

GRINDER PUMP STATION FORCE MAIN CONNECTION TO SINGLE GRAVITY SERVICE

CAPACITY IN GALLONS		
DIM	1,000 MIN	1,250
A	7'-0"	10'-0"
B	5'-0"	4'-0"
C	4'-0"	4'-2"
D	6'-0"	8'-0"

GREASE INTERCEPTOR DETAIL

PROCEDURES FOR CONNECTING TO A GRAVITY STUB

NOTE: BEFORE CONNECTING TO ANY GRAVITY STUB, EXCAVATE AND SHOOT THE ELEVATION OF THE STUB INVERT AND THE ELEVATION OF THE INVERT OF THE SAME PIPE COMING OUT OF THE IMMEDIATE DOWNSTREAM MANHOLE. MEASURE THE DISTANCE FROM THE MANHOLE TO THE STUB, CALCULATE THE PIPE GRADE. IF THE GRADE ON THE PIPE IS LESS THAN PLAN DESIGN THEN CONTACT THE C.G.C.S. PUBLIC WORKS DEPARTMENT AND THE PROJECT ENGINEER BEFORE PROCEEDING FURTHER. THE PROJECT ENGINEER AND THE C.G.C.S. PUBLIC WORKS DEPARTMENT WILL MAKE THE DECISION ON HOW TO RESOLVE THE DISCREPANCY BEFORE THE CONTRACTOR CAN PROCEED FURTHER.

NO WORK WILL BE ALLOWED ON A GRAVITY LINE UPSTREAM OF THE CONNECTION POINT TO THE C.G.C.S. SYSTEM WITHOUT PRIOR APPROVAL OF THE C.G.C.S. PUBLIC WORKS DEPARTMENT..

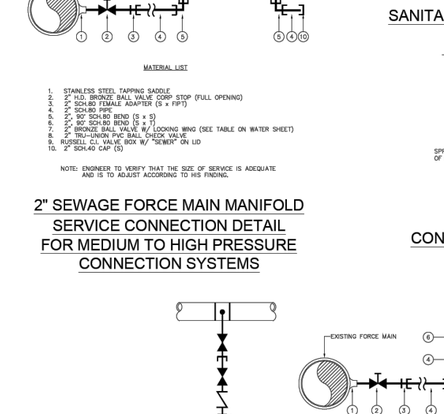

" SEWAGE FORCE MAIN MANIFOLD SERVICE CONNECTION / WITH PRESSURE GAUGE FITTING / FOR LOW PRESSURE RECEIVING SYSTEMS FOR CREATING ARTIFICIAL HEAD PRESSURE

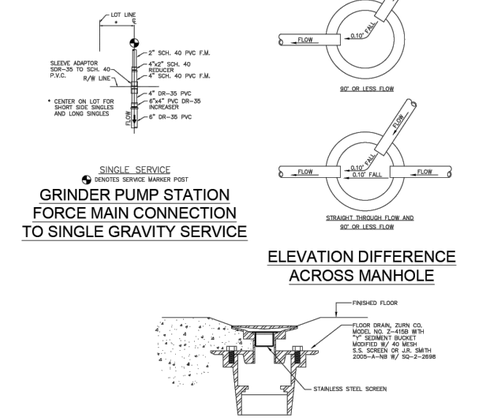

FLOOR DRAIN WITH STRAINER DETAIL

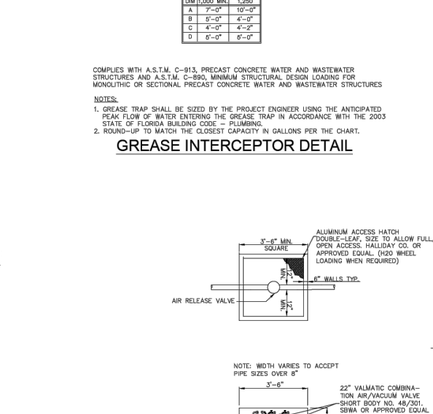

TAPPING OR CUTTING IN SERVICE LATERAL TO EXISTING SEWER MAIN

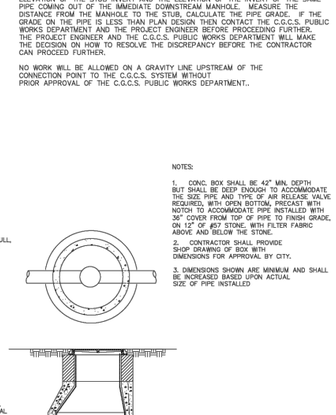

NOTES:

1. CONC. BOX SHALL BE 42" MIN. DEPTH BUT SHALL BE DEEP ENOUGH TO ACCOMMODATE THE SIZE PIPE AND TYPE OF AIR RELEASE VALVE REQUIRED, WITH OPEN BOTTOM, PRECAST WITH NOTCH TO ACCOMMODATE PIPE INSTALLED WITH 36" COVER FROM TOP OF PIPE TO FINISH GRADE, ON 12" OF #57 STONE, WITH FILTER FABRIC ABOVE AND BELOW THE STONE.
2. CONTRACTOR SHALL PROVIDE SHOP DRAWING OF BOX WITH DIMENSIONS FOR APPROVAL BY CITY.
3. DIMENSIONS SHOWN ARE MINIMUM AND SHALL BE INCREASED BASED UPON ACTUAL SIZE OF PIPE INSTALLED

FOR PIPE 10" OR SMALLER A 4' DIAMETER. NOTCHED MANHOLE CAN BE USED FOR AIR RELEASE VALVE.

SET MANHOLE ON MIN. OF 4 SOLID CONCRETE BLOCKS SPACED EVENLY AROUND THE MANHOLE W/ A MIN. OF 12"#57 STONE WITH FILTER FABRIC ABOVE AND BELOW THE STONE.

SANITARY SEWAGE FORCE MAIN AIR RELEASE VALVE VAULT

TO BE USED ON ALL PIPES 12" OR LARGER

SANITARY SEWAGE FORCE MAIN AIR RELEASE VALVE VAULT

TO BE USED ON ALL PIPES 10" OR SMALLER

NO	DATE	BY	REVISION DESCRIPTION
1	FEB.2016	SS	GENERAL UPDATE

DESIG
DRWN
CHKD
APRV
DATE

STANDARD SEWER SYSTEM DETAILS

PROJECT:

CITY OF GREEN COVE SPRINGS
321 WALNUT STREET
GREEN COVE SPRINGS, FLORIDA 32043

ACAD FILE NAME
SEWSTAND.DWG
SHEET NO.
OF

TOCOL Engineering, LLC
714 NORTH ORANGE AVENUE, GREEN COVE SPRINGS, FL 32043
PH: 904-215-1308
E.B. NUMBER: 26353

ENGINEER OF RECORD
JOHN J. MAHONEY III
FLORIDA
REGISTRATION NUMBER:
40177

WAREHOUSE BUILDING
FOR
MIKE REEVES
GREEN COVE SPRINGS UTILITY DETAILS

REVISIONS

PLOT DATE:
DRAWN BY:
DESIGNED BY:
CHECKED BY:
SCALE:
JOB NO.:

SHEET NO.
11C

M:\CAD Files\Green Cove Springs\6905191\Standard Utility Details\11-01-2017\SEWSTANDDETAILS.dwg, 11/7/2017 12:00:13 PM
Date: 1/30/25 Time: 4:55 PM DWG Name: \\TE-SJC\01-Projects\23-627 Energy Cove Metal Buildings Mike Reeves\03-CADD\23-627 GCS UTILITY DETAILS.dwg Layout: 11C

COMPACTION IN ROADWAYS AROUND MANHOLES

COMPACTION SHALL BE IN 12" LIFTS. THE LAST 18" WILL BE LIMEROCK. 2' AROUND MANHOLE TOP COMPACTED TO 98% MAXIMUM DENSITY WITH LBR OF 100 TO THE FINISHED LIMEROCK GRADE. NO BRICK ADJUSTMENTS WILL BE ALLOWED IN ROADWAYS (ONLY GRADE RINGS WILL BE ACCEPTED).

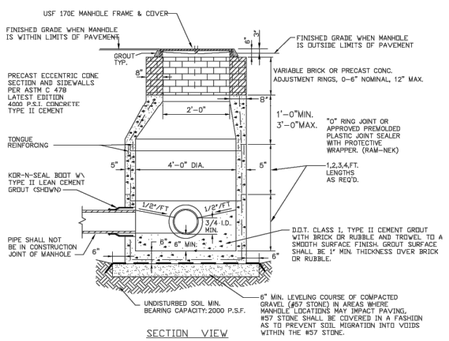

SANITARY SEWER MANHOLE

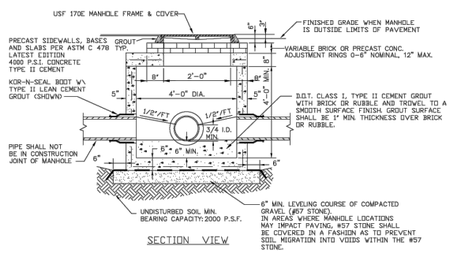

SHALLOW SANITARY SEWER MANHOLE

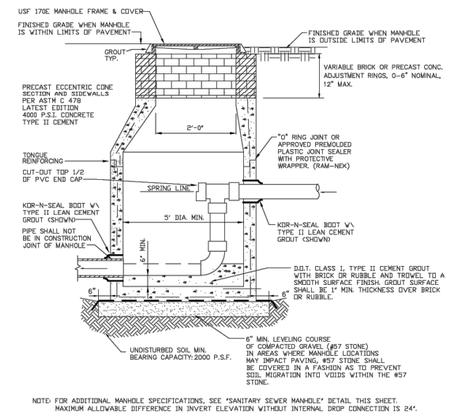

NOTE: FOR ADDITIONAL MANHOLE SPECIFICATIONS, SEE "SANITARY SEWER MANHOLE" DETAIL THIS SHEET. MAXIMUM ALLOWABLE DIFFERENCE IN INVERT ELEVATION WITHOUT INTERNAL DROP CONNECTION IS 24".

TYPICAL GRAVITY SEWER DROP PIPE CONNECTION TO MANHOLE

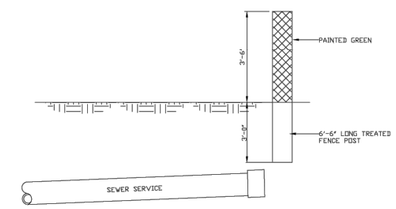

SEWER SERVICE MARKER POST

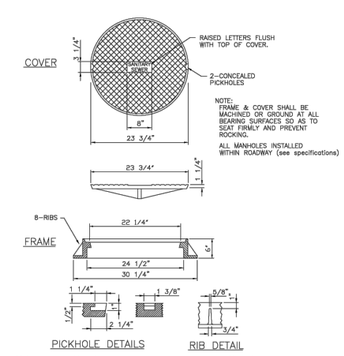

MANHOLE FRAME AND COVER SHALL BE USF CO. MOD. NO. 170E

SANITARY SEWER MANHOLE FRAME + COVER

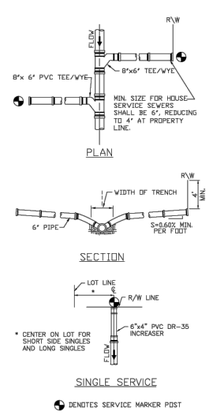

STANDARD SINGLE SEWER SERVICE LATERALS

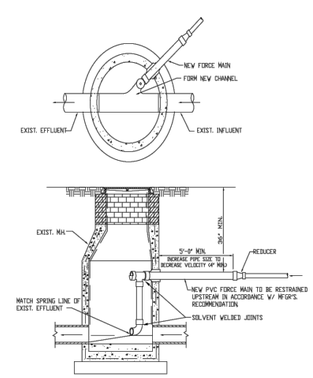

TYP. FORCE MAIN CONNECTION TO MANHOLE

NOTE: 1. THIS MANHOLE AND THE NEXT TWO MANHOLES DOWNSTREAM (AS REQUIRED BY UTILITY) ARE TO HAVE POLYETHYLENE LINER AS MANUFACTURED BY TAYLOR PRECAST CO. OR APPROVED EQUAL.

2. SIZE OF DROP PIPE CONNECTION TO MANHOLE SHALL BE DESIGNED BY THE PROJECT ENGINEER. MINIMUM SIZE SIZE SHALL BE 4". CONNECTION AND DROP PIPE SHALL BE SIZED TO REDUCE THE VELOCITY AND PREVENT "SPLASHOVER" WITHIN THE MANHOLE. 5'-0" MINIMUM DISTANCE FROM MANHOLE TO REDUCER MAY BE INCREASED TO ASSIST IN THIS VELOCITY REDUCTION.

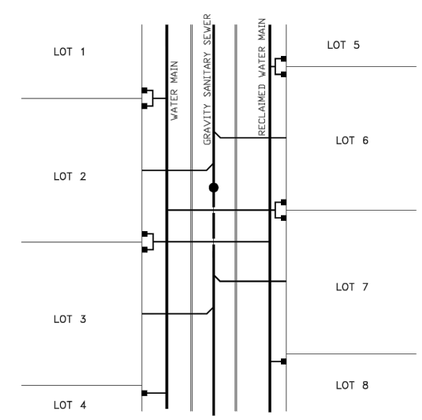

TYPICAL WATER AND SEWER SERVICE LOCATION PLAN

1.) ALL WATER AND REUSE DOUBLE SERVICES ON PROPERTY LINE.
2.) ANY SINGLE WATER OR REUSE SERVICE LINES ON LOT LINE.
3.) ALL SEWER SERVICES ARE TO CENTER OF LOTS.

NO	DATE	BY	REVISION DESCRIPTION
1	FEB.2016	SS	GENERAL UPDATES

DRWN
CHKD
APRV
DATE

GRAVITY SEWER SERVICE DETAILS

CITY OF GREEN COVE SPRINGS
321 WALNUT STREET
GREEN COVE SPRINGS, FLORIDA 32043

ACAD FILE NAME
SERVICES.DWG
SHEET NO.
1 OF 1

TOCOL Engineering, LLC
714 NORTH ORANGE AVENUE, GREEN COVE SPRINGS, FL 32043
PH: 904-215-1308 E.B. NUMBER: 26383

ENGINEER OF RECORD
JOHN J. MAHONEY III
FLORIDA
REGISTRATION NUMBER:
40177

WAREHOUSE BUILDING
FOR
MIKE REEVES
GREEN COVE SPRINGS UTILITY DETAILS

REVISIONS

PLOT DATE:
DRAWN BY:
DESIGNED BY:
CHECKED BY:
SCALE:
JOB NO.:

SHEET NO.
11D

Date: 1/30/25 Time: 4:56 PM DWG Name: \\TE-SAC\01-Projects\23-627 Energy Cove Metal Buildings Mike Reeves\03-CADD\23-627 GCS UTILITY DETAILS.dwg Layout: 11D
M:\CAD Files\Green Cove Springs\6505191\Standard Utility Details\11-01-2017\SEWDETAILS.dwg, 11/7/2017 1:18:02 PM

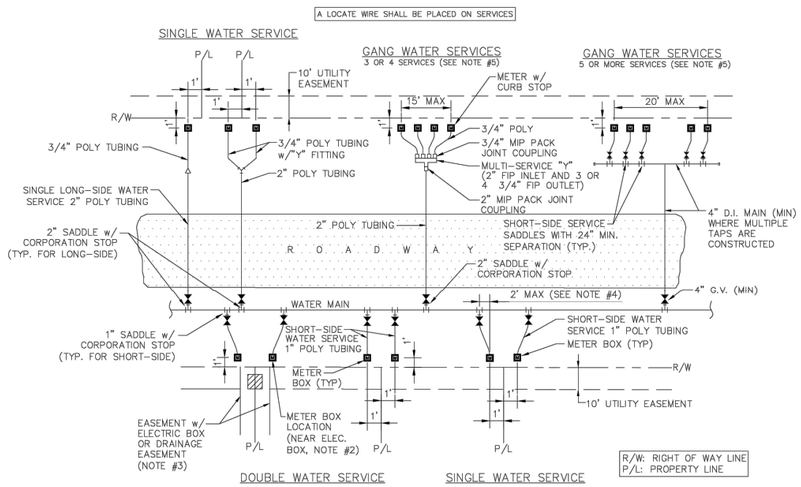

NOTES

1. THE SKETCHES ABOVE INDICATE TYPICAL RECLAIMED WATER SERVICE AND METER BOX LOCATIONS. ACTUAL LOCATIONS OF BOXES MAY VARY SLIGHTLY ACCORDING TO FIELD CONDITIONS ENCOUNTERED. TYPICALLY, THE METER BOX SHALL BE LOCATED 1.0' OFF OF THE R/W LINE.

2. UNLESS SPECIFIED OTHERWISE BY THE CITY OF GREEN COVE SPRINGS, THE METER BOX SHALL BE LOCATED 1.0' OFF OF THE R/W LINE, AND 1.0' FOOT INSIDE OF THE PROLONGATION OF ONE OF THE SIDE PROPERTY LINES. IF A CONFLICT EXISTS WITH OTHER UTILITIES, THE METER BOX MAY BE ADJUSTED TO FOUR FEET (MAX.) INSIDE PROPERTY LINES (IN LIEU OF 1.0' FEET). UNLESS APPROVED OTHERWISE BY THE CITY, THE RECLAIMED WATER METER BOX SHALL BE LOCATED IN NON-TRAFFIC AREAS (NOT IN SIDEWALKS OR DRIVEWAYS). IF AN UNAPPROVED METER BOX IS IDENTIFIED BY THE CITY, THEN THE CONTRACTOR OR CUSTOMER SHALL BE RESPONSIBLE FOR THE COST OF RELOCATING ANY METER BOX WHICH IS LOCATED IN THE SIDEWALK OR DRIVEWAY OR THE COST TO PROVIDE THE CORRECT METER BOX. THE CITY SHALL APPROVE ALL DEVIATIONS TO THE ABOVE PRIOR TO CONSTRUCTION.

3. IF DRAINAGE OR OTHER EASEMENT IS LOCATED BETWEEN LOTS, METER BOXES SHALL BE LOCATED AT THE EASEMENT LINE BUT OUTSIDE THE EASEMENT AREA.

4. FOR SINGLE SERVICES, THE HORIZONTAL DISTANCE (PERPENDICULAR TO THE MAIN) BETWEEN THE SERVICE'S SADDLE AND THE METER BOX SHALL BE 2 FEET MAXIMUM. FOR DOUBLE 3/4"SERVICES, THE 2"POLY MAIN SHALL BE LOCATED CENTERED BETWEEN THE TWO METER BOXES. LOCATE WIRE IS REQUIRED ON ALL SERVICES. THE WIRE SHALL RUN FROM THE METER BOX TO THE MAIN (WITH NO CONNECTION TO MAIN WIRE WITH THE LAST 24 INCHES STRIPPED OF INSULATION/BARE WIRE AS GROUND). ALL EXCEPTIONS TO THIS REQUIREMENT MUST BE APPROVED BY THE CITY OF GREEN COVE SPRINGS. THIS WILL ASSIST IN LOCATING EXISTING SERVICE LINES IN THE FUTURE.

5. GANG RECLAIMED WATER SERVICES: FOR 3 OR 4 SERVICES IN ONE AREA, A DUCTILE IRON PIPE (D.I.P.) RECLAIMED WATER MAIN EXTENSION W/LOCATE WIRE MAY BE UTILIZED ON EITHER SHORT-SIDE OR LONG-SIDE SERVICES WHERE SHOWN ON THE DRAWINGS. LOCATE WIRE SHALL EXTEND FROM ONE METER BOX TO CURB STOP AT RECLAIMED WATER MAIN. FOR 5 OR MORE SERVICES IN ONE AREA, A RECLAIMED WATER MAIN EXTENSION W/LOCATE WIRE MAY BE UTILIZED ON EITHER SHORT-SIDE OR LONG-SIDE SERVICES WHERE SHOWN ON THE DRAWINGS (TAPS STAGGERED AND AT 2 FEET ON CENTER (MIN). FOR WATER SUPPLY HEADERS WHERE 5 OR MORE TAPS ARE CONSTRUCTED, THE HEADER PIPE SHALL BE 4" AT A MINIMUM. EXAMPLE: CONSTRUCT A 4" MAIN D.I. CROSSING THE STREET FOR 5 RESIDENTIAL CUSTOMERS, UTILIZING 4" G.V., 4" PIPE, 4"X1" SADDLES AND 1" CURB STOPS (NO GLUED TEE FITTINGS). THE 4" OR LARGER D.I.P. RECLAIMED WATER MAIN MUST BE SIZED AND DESIGNED BY THE ENGINEER.

6. ALL COMMERCIAL WATER SERVICES SHALL BE 2" POLYETHYLENE PIPING CONNECTED TO 2" CURB STOP IN METER BOX, UNLESS OTHERWISE APPROVED BY THE CITY.

RECLAIMED WATER SERVICE INSTALLATIONS 2" AND SMALLER METER

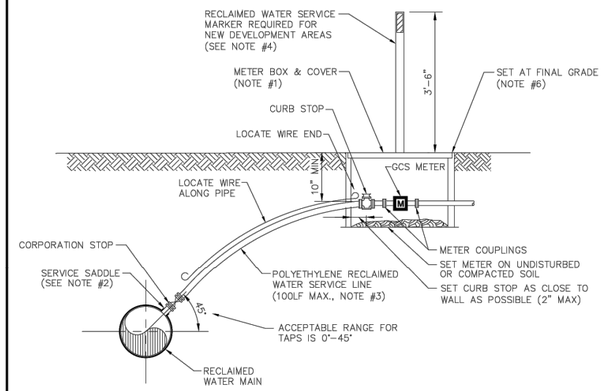

NOTES

1. SEE CITY OF GREEN COVE SPRINGS APPROVED MATERIALS MANUAL AND SYSTEM DETAILS FOR REQUIREMENTS.

2. SINGLE BAND SADDLES MAYBE UTILIZED ON NEW 1" RECLAIMED WATER SERVICES WHICH ARE INSTALLED ON A DRY 10" SIZE OR SMALLER RECLAIMED WATER MAIN (NEW RECLAIMED WATER MAIN CONSTRUCTION). FOR WET TAPS OR RECLAIMED WATER MAINS 12" SIZE AND LARGER, A DOUBLE BAND SADDLE IS REQUIRED.

3. NO OPEN CUT UNDER ROADWAY PAVING ALLOWED UNLESS THE ROADWAY IS BEING RECONSTRUCTED OR IF DIRECTED OTHERWISE BY CITY OF GREEN COVE SPRINGS. CONSTRUCT POLY LINE WITH 36" (MIN.) COVER UNDER ROADWAYS. THE POLY RECLAIMED WATER SERVICE LINE SHALL BE SAME SIZE AS THE METER (3/4" MINIMUM) AND BE INSTALLED PERPENDICULAR TO THE MAIN AND NOT EXCEED 100LF UNLESS OTHERWISE APPROVED BY CITY OF GREEN COVE SPRINGS.

4. INSTALL PVC PLUG IN ALL CURB STOPS IF RECLAIMED WATER SERVICE IS "NOT IN USE" (I.E.: IF NO METER IS INSTALLED). IN ADDITION, INSTALL A 6', 6" P.T. FENCE POST (TOP PAINTED PURPLE) 12" OFF SIDE OF METER BOX. THE REMOVAL OR TRANSFER OF A RECLAIMED WATER SERVICE SHALL INCLUDE BRASS METER COUPLINGS (HEX ON BARREL TYPE).

5. THE CONTRACTOR SHALL BE RESPONSIBLE FOR THE REPAIR OR REPLACEMENT OF THE BOXES, METERS OR ELECTRONIC DEVICES IF DAMAGED BY THE CONTRACTOR DURING THE CONSTRUCTION PERIOD.

6. METER BOX AND TOP SHALL BE CLEAR OF ALL DEBRIS TO ALLOW FULL ACCESS TO BOX (I.E., NO DIRT, TRASH OR OTHER DEBRIS PLACED ON TOP OF BOX).

7. LOCATE WIRING REQUIRED ON ALL LONG AND SHORT SERVICES.

RECLAIMED WATER SERVICE DETAIL 2" AND SMALLER METER

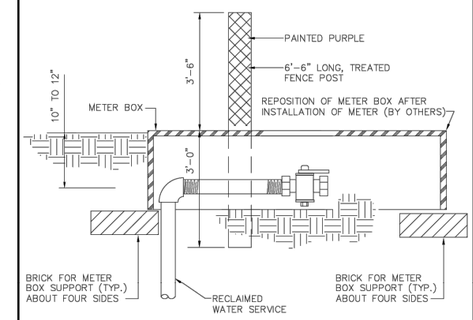

RECLAIMED WATER SERVICE MARKER POST

NOTE:
ALL SERVICES ARE TO BE CLEARLY MARKED BY A TREATED 6'-6" LONG MARKER POST PAINTED PURPLE. ALL SERVICES ARE TO BE EXTENDED ABOVE GRADE UNTIL COMPLETION OF ALL GRADING ACTIVITIES. ONCE FINAL ROAD GRADING IS COMPLETE, LOWER SERVICES BY CUTTING OFF RISER 10" TO 12" BELOW FINAL GRADE AND INSTALL 90° BEND, NIPPLE AND LW BALL VALVE AT THAT ELEVATION. SET METER BOX OVER ENTIRE HORIZONTAL SECTION OF SERVICE LINE FROM LAST 90° BEND TO THE END OF THE CURB STOP. BOX TO BE REPOSITIONED WHEN THE METER IS INSTALLED. MARKER POST TO BE INSTALLED ADJACENT TO AND LOCATED AT THE MID SECTION OF THE METER BOX.

NOTE:
MIN. WALL THIKNESS: .25"
DOUBLE WALL BODY w/STRUCTURAL SUPPORT RIBS
w/MIN. THINCKNESS: 3/8"
1" BOTTOM FLANGE
BOX IS INJECTED MOLDED STRUCTURAL FOAM RECYCLED POLYPROPYLENE MATERIAL

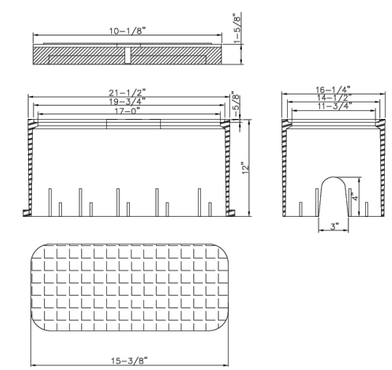

PURPLE METER BOX & SOLID PURPLE LID

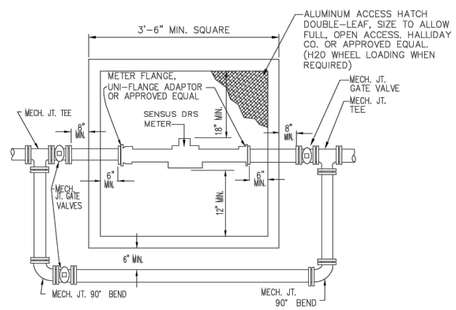

NOTES:
1. ALL PIPE TO BE D.I.
2. ALL VALVES & FITTINGS TO BE DUCTILE IRON.
3. MIMINUM LENGTH OF 8 DIAMETERS OF STRAIGHT PIPE TO BE INSTALLED ON INLET SIDE OF METER.
4. ALL PIPE AND FITTINGS TO BE SAME SIZE AS METER.
5. CONC. BOX SHALL BE 42" DEEP WITH OPEN BOTTOM, PRECAST WITH NOTCH TO ACCOMODATE PIPE INSTALLED 36" DEEP, INSTALLED ON 12" OF #57 STONE
6. CONTRACTOR SHALL PROVIDE SHOP DRAWING OF BOX WITH DIMENSIONS FOR APPROVAL BY C.C.U.A.
7. DIMENSIONS SHOWN ARE MINIMUM AND SHALL BE INCREASED BASED UPON ACTUAL SIZE OF METER PROVIDED.

METER VAULT 3" AND LARGER METERS

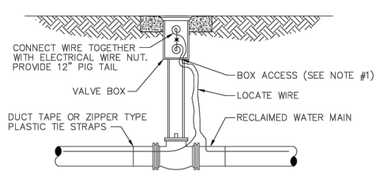

LOCATE WIRE BOX UTILIZING VALVE BOX

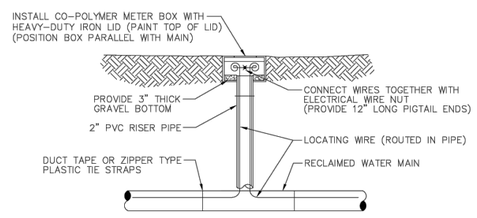

LOCATE WIRE BOX UTILIZING METER BOX

NOTES

1. LOCATE WIRE SHALL ENTER THE VALVE BOX THROUGH A "V" CUT IN THE 6" PVC RISER PIPE.

LOCATE WIRE BOX

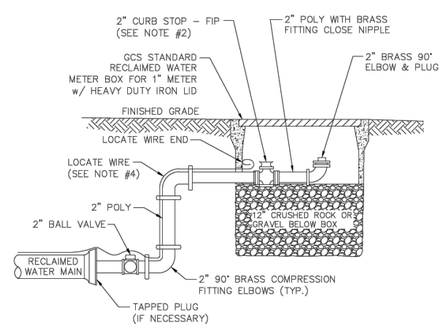

NOTES

1. PIPE SHALL BE POLYETHYLENE. FITTINGS SHALL BE BRASS.
2. THE 2" CURB STOP SHALL BE ALL BRONZE. FITTINGS SHALL BE BRASS.
3. CANNOT BE PLACED UNDER CONCRETE OR PAVEMENT.
4. PLACE 2 FEET PAST LAST RECLAIMED WATER MAIN SERVICE CONNECTION.

FLUSHING VALVE BELOW GRADE

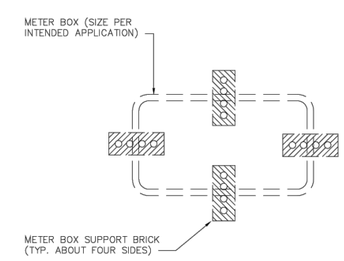

METER BOX SUPPORT DETAIL

NO	DATE	BY	REVISION DESCRIPTION
1	FEB 2016	SS	GENERAL UPDATES

DESG
DRWN
CHKD
APRV
DATE

PROJECT:
STANDARD RECLAIMED WATER SYSTEM DETAILS

CITY OF GREEN COVE SPRINGS
321 WALNUT STREET
GREEN COVE SPRINGS, FLORIDA 32043

ACAD FILE NAME
REUSE.DWG
SHEET NO.
1 OF 2

TOCOL Engineering, LLC
714 NORTH ORANGE AVENUE, GREEN COVE SPRINGS, FL 32043
PH: 904-215-1308 E.B. NUMBER: 26353

ENGINEER OF RECORD
JOHN J. MAHONEY III
FLORIDA REGISTRATION NUMBER: 40177

WAREHOUSE BUILDING
FOR
MIKE REEVES
GREEN COVE SPRINGS UTILITY DETAILS

REVISIONS

PLOT DATE:
DRAWN BY:
DESIGNED BY:
CHECKED BY:
SCALE:
JOB NO.:

SHEET NO.
11E

M:\CAD Files\Green Cove Springs\9505191\Standard Utility Details\11-01-2017REUSE.dwg, 11/7/2017 1:24:05 PM

Date: 1/30/25 Time: 4:56 PM DWG Name: \\TE-SJC\01-Projects\23-627 Energy Cove Metal Buildings Mike Reeves\03-CADD\23-627 GCS UTILITY DETAILS.dwg Layout: 11E

OUTLINE SPECIFICATIONS FOR CONSTRUCTION OF RECLAIMED WATER DISTRIBUTION SYSTEM

01. INTENTION. It is the declared and acknowledged intention to secure a new reclaimed water distribution system, complete, in accordance with the plans and specifications, and contract documents. All new work shall be in accordance with Green Cove Springs Details and Specifications and Approved Materials Manual.

02. GENERAL. All materials shall be new and unused. Materials shall be warranted by the Contractor as to materials, workmanship and accuracy of As-Built drawings for a period of two years from the date of completion of the work or beneficial use of the facilities. Workmanship shall be of good quality; i.e., mains shall be laid in a uniform alignment, fittings shall be properly restrained, trenches shall be properly excavated and backfilled, valve boxes shall be adjusted to finished grade.

03. SURVEYS. The Utility Contractor shall provide all surveys necessary for the layout and construction of the work of his contract.

04. EARTHWORK. Earthwork shall include all excavation, fill and backfill (hand/machine), compaction and rough grading of materials encountered. No unsuitable materials clay, muck, or peat removed from pipe trenches are to be used for backfill. All fill or backfill shall be either sand or sandy clay, free of roots, trash or other debris. All backfill alongside of and to a height twenty-four inches above all pipe shall be free of clay or organic material, compacted by either hand or machine operation carefully to 98%. All other backfill shall be compacted by either hand or machine operation carefully to 95% (outside of paving), 98% (under paving) of its optimum moisture content as determined by ASTM D698, latest.

05. JOINT RESTRAINT. All fittings shall be properly and adequately restrained against lateral movement at all reclaimed water main tees, crosses, valves, bends and fire hydrants. Restrainers shall be Uni-Flange Series 1300, 1350, 1390 or approved equal installed per manufacturer's recommendations and GCS Details and Specifications.

06. DUCTILE IRON PIPE. Ductile iron pipe shall conform to ANSI Specification A21.50 (AWWA C150) latest, "Thickness Design of Ductile Iron Pipe", Table 50.5, laying condition Type 2, internal operating pressure 250 p.s.i. for an 8-foot depth of cover, Class 51 minimum and shall be ANSI A21.51 (AWWA C151), latest centrifugally cast pipe. Laying lengths shall be 20 feet or less, each length clearly marked with pressure rating, thickness class, height of pipe without lining, length, and manufacturer. Ductile iron pipe for reclaimed water service shall be furnished with cement lining per AWWA C110, C115 and C151. The pipe shall have design values of 50,000 PSI minimum tensile strength, and 42,000 P.S.I. minimum yield strength. Ductile iron pipe for reclaimed water service shall be used only with prior approval of the city of GCS. All ductile iron piping shall be wrapped with purple tape and stamped "Reclaimed Water" on at least two sides @ 12" o.c. along pipe barrel.

07. DUCTILE IRON FITTINGS shall be C153 cement lined and suitable for the type and class of pipe to which connected. Gaskets shall be suitable for reclaimed water service. Minimum working pressure shall be 150 P.S.I.

08. POLYVINYL CHLORIDE PIPE. Polyvinyl chloride pipe for reclaimed water mains 4 inch in diameter and larger, shall be P.V.C. C-900, DR-18, conforming to ASTM D-1784, D-2241, D-3139 and F-477, latest, and shall bear the seal of the National Sanitation Foundation. Pipe shall be purple color and marked on at least 2 sides with the word "RECLAIMED WATER" and at every 12" along the barrel of the pipe. Couplings shall be rubber gasketed, push-on type conforming to ASTM D-2122.

09. STEEL CASING PIPE. Steel casing pipe shall be of size indicated on the Drawings and shall conform to ASTM A139, with a minimum yield strength of 35,000 p.s.i.

10. POLYVINYL CHLORIDE (PVC 1120, SCHEDULE 40) PIPE shall conform to the requirements of ASTM D 1785. Fittings and threaded nipples shall be Sch. 80 PVC. All piping smaller than 4" shall be Sch. 80 PVC, shall be purple in color and stamped "Reclaimed Water".

11. GATE VALVES AND BOXES. Gate valves shall be non-rising stem type and shall be suitable for a 200 p.s.i. non-shock working pressure Gate valves shall be mechanical joint, flanged or screwed. Gate valves shall have a 2" operating nut and open left. Gate valves shall have joints suitable for the type of main on which installed. Valves 2" & 3" shall be bronze (distribution mains only). Gate valves 4" and larger shall be iron body, bronze fitted with resilient seat. Valves shall be of domestic (American) manufacture and shall be A.F.C., M&H, Mueller or approved equal. Valves 16" and larger shall be AWWA C-509, M&H Valve Co. Valve boxes with screw extensions shall be provided for all gate valves. Boxes shall be of cast iron construction, 7/32" minimum wall thickness and shall be nontacky tar enamel coated. The word "RECLAIMED WATER" shall be cast in the cover. Other gate valves 2" and smaller shall be heavy-duty bronze, wheel operated gate valves. Box covers to be primed and painted purple.

12. RECLAIMED WATER METER BOXES. Reclaimed water meter boxes for 5/8"x3/4", 3/4"and 1" meters shall be DFW D1200 w/ purple lids. Meter boxes for flushing hydrants and 1" meters shall be Russell D-112, 1 1/2" and 2" meter boxes shall be DFW D1500. Developer shall be responsible for installation of meter boxes on all reclaimed water services as part of the reclaimed water main installation. All curb stops shall be adjusted to the proper elevation and shall be accessible for the installation of the reclaimed water meter. The contractor shall be required to open all boxes for the City's inspector at the final inspection. A treated 6' - 6" long treated fence post marker shall be installed at the side of and centered on the meter box and painted purple for identification. The box lid shall be painted purple.

13. CURB STOPS. Curb stops shall be cast bronze, no lead, inverted key stop roundway, with check, lock wing type, for locking in the closed position. Curb stops shall be Ford Ball Valve or Mueller, with F.I.P.T.

14. CORP STOPS. Corp stops shall be cast bronze, no lead, inverted key stop roundway, with check. Corp stops shall be Ford Ball Valve or Mueller with F.I.P.T.

15. PRESSURE REDUCING VALVES (when and where required) The pressure reducing valve shall maintain a constant delivery pressure as part of the service to each residential irrigation system. Pressure reducing valves shall conform with the standard requirements of the ASSE (Std. 1003) and WPOA Uniform Plumbing Code. Approved model: Watts Series USB or equal.

16. INSTALLATION. The minimum cover over top of reclaimed water main shall be 36" minimum. All lines and appurtenances shall be thoroughly cleaned of all foreign matter before being lowered into the trench and shall be kept clean during laying operations by means of plugs or other approved methods. All pipe shall be checked for defects before being lowered into the trench. Defective pipe shall not be used. Pipe found to be defective, after installation, shall be removed and replaced with sound pipe at no additional expense to the Owner. The full length of each section of pipe shall rest solidly upon the pipe bed, with recesses excavated to accommodate the bells and joints. All pipe that has the grade or joint disturbed after laying shall be taken up and reinstalled. The pipe shall not be laid in water, or, when trench or weather conditions are unsuitable for the work. All joints shall be cleaned of all foreign matter before making the joint. Fittings at bends in the pipe shall be properly restrained with joint restrainers adequately sized to prevent movement and dislocating or blowing off when the line is under pressure. Service laterals shall terminate at the point noted in the details.

17. SEPARATION OF RECLAIMED WATER MAINS. Maximum separation of reclaimed water lines and potable water lines shall be practiced. A minimum horizontal separation of six feet, center-to-center, or five feet, outside-to-outside, shall be maintained between reclaimed water mains and either potable water mains or sewage collection lines. Reclaimed water lines crossing under water mains shall be laid to provide a minimum vertical separation of 18 inches between the invert of the upper pipe and the crown of the lower pipe. Where the minimum separation cannot be maintained, the crossing shall be arranged such that the reclaimed water main pipe joints and water main joints are equidistant from the point of crossing with no less than ten feet between joints. Alternatively, the reclaimed water main shall be placed in a sleeve to obtain the equivalent of the required ten feet separation. Where there is no alternative to reclaimed water pipes crossing over a water main, the criteria for minimum separation between lines and joints shall be required.

18. PIPE FLUSHING. All reclaimed water system piping shall be flushed with clean water utilizing full pipe diameter flushing for all piping up to and including 8" diameter.

19. TESTS. After the pipe is laid, the joints completed, and the trench backfilled, the newly laid pipe and appurtenances shall be subjected to a Hydrostatic and Leakage test of 150 pounds per square inch for a period of at least two hours. During this period, all joints shall be inspected to determine water tightness of the system. Any leaks detected shall be corrected. Tests shall be in accordance with the City of Green Cove Springs requirements and specifications. Curb and limerock may be installed after construction of the reclaimed water mains, however, limerock priming cannot proceed until such time as the C.C.U.A. inspector approves the reclaimed water distribution system pressure test. This will be strictly enforced. If the reclaimed water system is damaged during any of the operations prior to paving, a follow up test may be required by the City of Green Cove Springs.

20. CURB MARKING. After installation, reclaimed water main valves and service lateral locations shall be scribed in the face of the concrete curb with the appropriate marking (RW-reclaimed service, RV-reclaimed main valve, etc.). Markings shall be a minimum of 3" high.

FINAL INSPECTION PROCEDURES

PRIOR TO FINAL INSPECTION, THE FOLLOWING MUST BE COMPLETED:

1. Pressure test and flushing report.
2. The Engineer of Record Certification to FDEP. This can be done w/ preliminary as-builts.
3. Water services must be lowered and meter boxes installed, valve boxes must be set on all gate valves.
4. As-built drawings shall have been updated to accommodate the C.G.C.S. comments and the final elevation of the manhole tops must be included.
5. All valves, locate wire boxes, sewer, water and reclaimed services shall be scribed in curb and painted the correct color.
6. As-builts, must be accepted and approved by the City of Green Cove Springs Public Works.

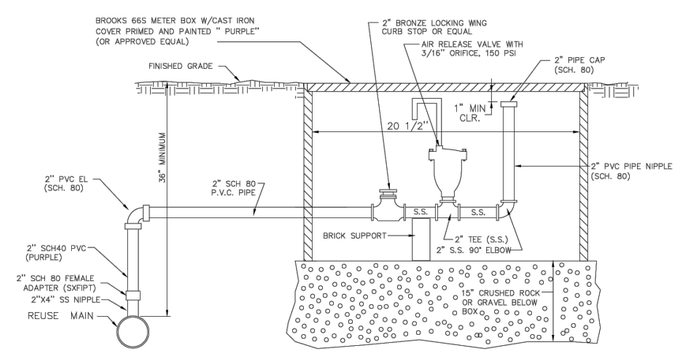

AIR RELEASE VALVE DETAIL

NTS

NO	DATE	BY	REVISION DESCRIPTION
1	FEB 2016	SS	GENERAL UPDATES

DESG
DRWN
CHKD
APRV
DATE

PROJECT:
STANDARD RECLAIMED WATER
SYSTEM SPECIFICATIONS & DETAILS

CITY OF
GREEN COVE SPRINGS
321 WALNUT STREET
GREEN COVE SPRINGS, FLORIDA 32043

ACAD FILE NAME
REUSE.DWG
SHEET NO.
2 OF 2

TOCOL Engineering, LLC
714 NORTH ORANGE AVENUE, GREEN COVE SPRINGS, FL 32043
PH: 904-215-1388 E.B. NUMBER: 26383

ENGINEER OF RECORD
JOHN J. MAHONEY III
FLORIDA
REGISTRATION NUMBER:
40177

WAREHOUSE BUILDING
FOR
MIKE REEVES

GREEN COVE SPRINGS UTILITY DETAILS

REVISIONS

PLOT DATE:
DRAWN BY:
DESIGNED BY:
CHECKED BY:
SCALE:
JOB NO.:

SHEET NO.
11F

M:\CAD Files\Green Cove Springs\85051191\Standard Utility Details\11-01-2017\REUSE.dwg, 11/7/2017 1:24:35 PM

Date: 1/30/25 Time: 4:57 PM DWG Name: \\TE-SJC\01-Projects\23-627 Energy Cove Metal Buildings Mike Reeves\03-CADD\23-627 GCS UTILITY DETAILS.dwg Layout: 11F

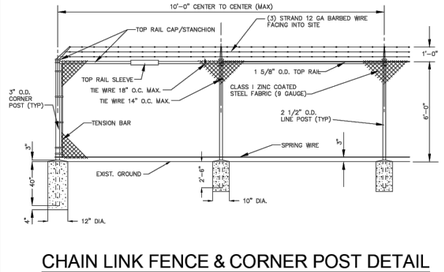

CHAIN LINK FENCE & CORNER POST DETAIL

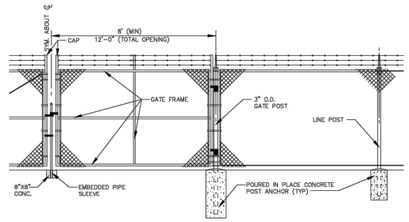

GATE DETAIL

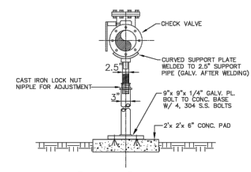

PIPE SUPPORT DETAIL

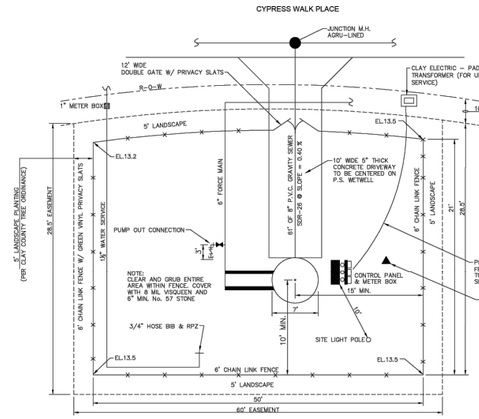

TYPICAL PERMANENT PUMP STATION SITE PLAN

N.T.S.

GENERAL NOTES:

1. PUMPS: TWO (2) OR THREE (3) TOTALLY SUBMERSIBLE FLYGT (OR APPROVED SUBSTITUTE) SEWAGE PUMPS WITH INTEGRAL MOTORS. DISCHARGE CONNECTION AND ELECTRICAL REQUIREMENTS AS DETERMINED.
2. GAUGES: GAUGES SHALL BE FURNISHED WHERE SHOWN MOUNTED FACE UP. GAUGES SHALL BE 4" IN DIAMETER BOURDON TUBE TYPE WITH BRASS MOVEMENTS, COMPLETELY SEALED UNBREAKABLE PLEXIGLASS CRYSTAL, WITH NOT LESS THAN 90% GLYCERIN-FILLED STAINLESS STEEL CASE. EACH GAUGE SHALL HAVE A RANGE SUCH THAT THE NORMAL OPERATING PRESSURE SHALL BE APPROXIMATELY HALF OF THE RANGE. GAUGES SHALL ACQUIRE ACCURACY OF ±1/2 PERCENT OF FULL DAMPENING SCREW. GAUGE SHALL BE MOUNTED LOWER-SIDE (MPT) STEEL PIPE WITH DIAPHRAGM PROTECTORS WITH STAINLESS STEEL DIAPHRAGM AND STOP COCKS BETWEEN DISCHARGE PIPES AND GAUGES. GAUGES SHALL BE EQUAL TO THOSE MANUFACTURED BY THE LENZ COMPANY.
3. FENCING: ALL PARTS FOR CONSTRUCTION OF THE FENCE AND NECESSARY TO MAKE A COMPLETE INSTALLATION SHALL BE FURNISHED AND INSTALLED. FENCING SHALL COMPLY WITH ASTM A392-(AST LATEST) GALVANIZED CHAIN LINK FABRIC, ASTM A392-(AST LATEST) FABRIC AND AS DETAILED ON THE DRAWING. FITTINGS SHALL BE MALLEABLE IRON OR PRESSED STEEL FORGINGS. ALL FERROUS MATERIALS SHALL BE THOROUGHLY GALVANIZED BY THE HOT-DIP METHOD.
   A. PRIVACY SLATS: SLATS SHALL BE FLAT/TUBULAR IN SHAPE, THERMOPLASTIC WITH A WALL THICKNESS F 0.030" ±0.003"). LENGTH AND WIDTH OF SLATS SHALL BE PROVIDED TO ACCOMMODATE CHAIN-LINK FENCE FABRIC AS SPECIFIED HEREIN. SLATS SHALL HAVE A HORIZONTAL LOCKING STRIP TO PROVIDE SECURE ATTACHMENT TO CHAIN-LINK FABRIC, AND PROVIDE A PRIVACY FACTOR OF 89 %. THE MINIMUM WIDTH SLAT SHALL BE 1-1/8". ACCEPTABLE MANUFACTURER: PATRIOTAN PRODUCTS, OR EQUAL.
   B. PRIVACY SCREENING: ENVIRONMENTAL PRIVACY SCREENING SHALL BE 86 TO 90% KNIT RASCHEL, 100% POLYETHYLENE UV STABILIZED FIBER, COLOR GREEN. SCREENING SHALL BE ATTACHED TO THE FENCE FABRIC WITH SUFFICIENT TIES TO SECURE THE SCREEN. ACCEPTABLE SCREEN: PRIVACY PLUS OR EQUAL.
4. ALL PRECAST REINFORCED CONCRETE PRODUCTS SHALL BE MANUFACTURED IN ACCORDANCE WITH ASTM C478 (LATEST), WITH CLASS A CONCRETE UNLESS OTHERWISE NOTED. ALL CONCRETE AND REINFORCING SHALL BE CERTIFIED BY AN ENGINEER REGISTERED WITH THE STATE OF FLORIDA.
5. ALL DISCHARGE PIPING FROM THE PUMPS THROUGH TO THE VALVE VAULT SHALL BE 316 GRADE, SCH.40 STAINLESS STEEL. THIS INCLUDES ALL FITTINGS WITHIN THIS PRESCRIBED LIMIT.
6. ALL DISCHARGE PIPE FITTINGS 6" AND LARGER (AFTER THE VALVE VAULT) SHALL BE POLY-LINED (40 MIL THICKNESS) DUCTILE IRON. ALL DISCHARGE PIPE FITTINGS 4" AND SMALLER SHALL BE EPOXY LINED OR POLY-LINED (40 MIL THICKNESS) DUCTILE IRON.
7. PUMP STATION SITE SHALL BE COVERED (INSIDE OF FENCED AREA) WITH NO. 57 LIMESTONE 6" THICK WITH 8 MIL VISQUEEN BETWEEN ROCK AND GRADE. DRIVEWAY SHALL BE 6"-2500 PSI CONCRETE.
8. ALL DUCTILE IRON FITTINGS AND PIPE SHALL BE HOLIDAY TESTED PRIOR TO INSTALLATION.
9. DUCTILE IRON PIPE, FITTINGS AND BOLTS SHALL RECEIVE A THOROUGH EXTERIOR COATING OF BITUMINOUS COATING AS SPECIFIED IN A.N.S.I. SPECIFICATIONS A21.51.
10. ALL EXTERIOR JOINTS OF PRECAST CONCRETE WETWELLS SHALL BE SEALED WITH A RUBBERIZED ASPHALT MEMBRANE TAPE. TAPE SHALL BE PERM-A-BARRIER BY W.R. GRACE, ELASTOFLY BY KARNAK OR EQUAL.
11. ENGINEERS SHALL PROVIDE VERIFICATION THAT THE TOP OF THE WETWELL, BOTTOM OF CONTROL PANELS, GENERATOR RECEPTACLE AND GENERATOR SLAB ARE ALL ABOVE THE 100 YR. FLOOD ELEVATION. THEREFORE, I DO HEREBY CERTIFY THAT THE ABOVE ELEVATIONS HAVE BEEN MET.
12. ALL PUMP STATIONS SHALL BE CONTROLLED BY DATA FLOW SYSTEMS SCADA, OR OTHERWISE APPROVED BY THE CITY OF GREEN COVE SPRINGS.

(PROFESSIONAL ENGINEERS SIGNATURE)

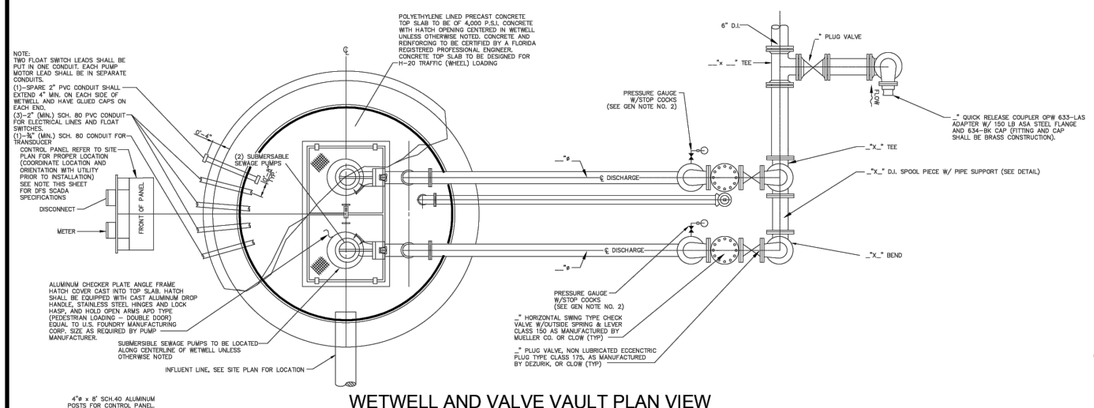

WETWELL AND VALVE VAULT PLAN VIEW

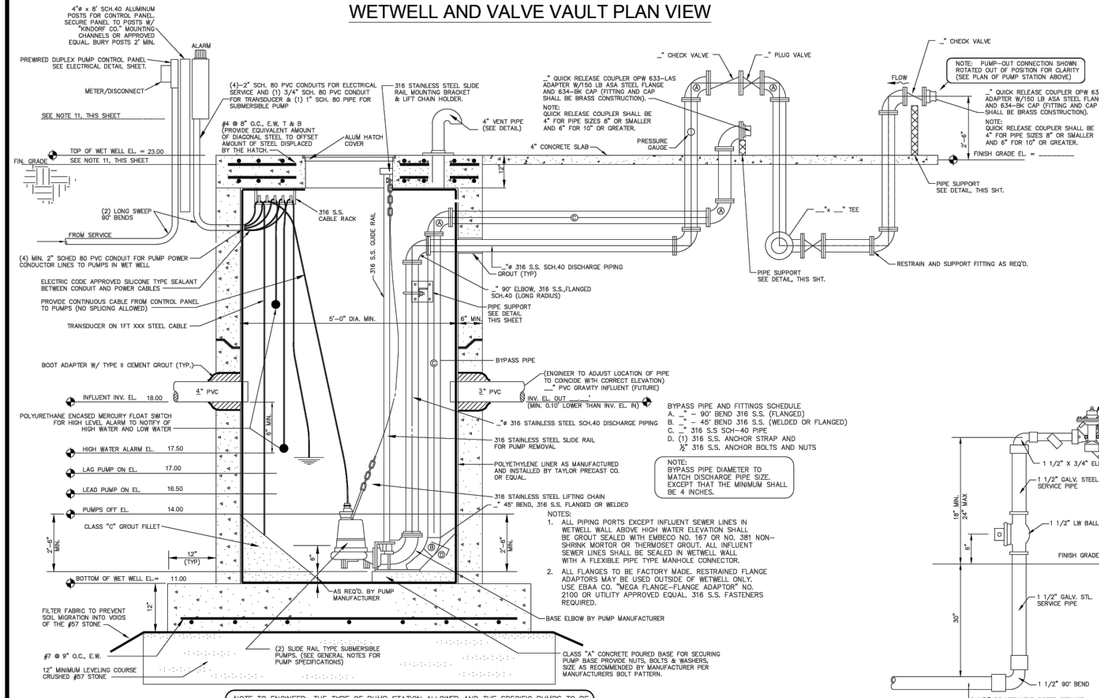

PERMANENT POLYETHYLENE LINED SUBMERSIBLE PUMP STATION WITH VALVE PIT - ELEVATION

(NOTE: PIPE SIZES, WETWELL SIZES AND INSIDE DIMENSIONS OF VALVE PIT TO BE VERIFIED BY ENGINEER AND MODIFIED AS NECESSARY.)

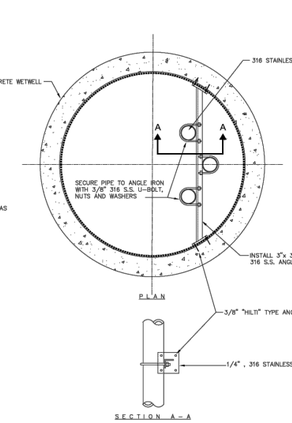

PIPE ATTACHMENT TO WALL DETAIL

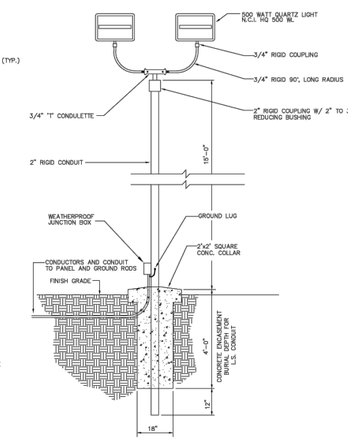

SITE LIGHT STANDARD DETAIL

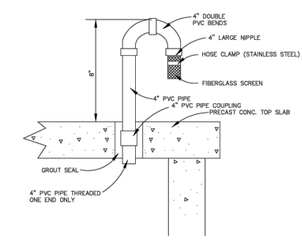

VENT PIPE DETAIL

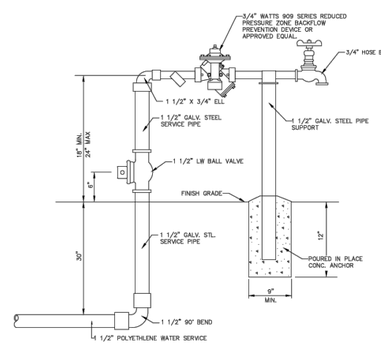

WATER SERVICE

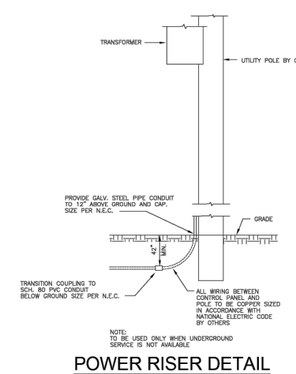

POWER RISER DETAIL

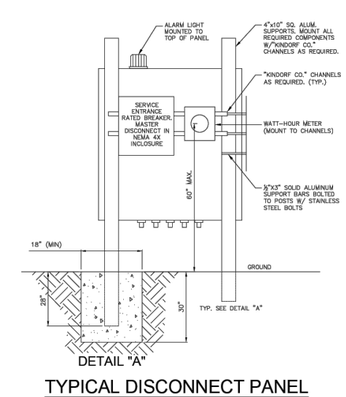

DETAIL "A"

TYPICAL DISCONNECT PANEL

M:\CAD Files\Green Cove Springs\95905191\Standard Utility Details\11-01-2017\PUMPSTATION.dwg, 11/7/2017 1:25:35 PM

Date: 4/21/25 Time: 5:37 PM DWG Name: \\TE-GCS\01-Projects\23-627 Energy Cove Metal Buildings Mike Reeves\03-CADD\23-627 GCS UTILITY DETAILS.dwg Layout: 11G

NO	DATE	BY	REVISION DESCRIPTION
1	FEB.2016	SS	GENERAL UPDATE

DESG
DRWN
CHKD
APRV
DATE

PROJECT:
PERMANENT SUBMERSIBLE PUMP STATION
WITH CONCRETE WET WELL

CITY OF
GREEN COVE SPRINGS
321 WALNUT STREET
GREEN COVE SPRINGS, FLORIDA 32043

ACAD FILE NAME

SHEET NO.

OF

TOCOL Engineering, LLC
714 NORTH ORANGE AVENUE, GREEN COVE SPRINGS, FL 32043
PH: 904-215-1308 E.B. NUMBER: 26383

ENGINEER OF RECORD
JOHN J. MAHONEY III
FLORIDA
REGISTRATION NUMBER:
40177

WAREHOUSE BUILDING
FOR
MIKE REEVES

GREEN COVE SPRINGS PUMP STATION DETAILS

REVISIONS

PLOT DATE:
DRAWN BY:
DESIGNED BY:
CHECKED BY:
SCALE:
JOB NO.:

SHEET NO.
11G

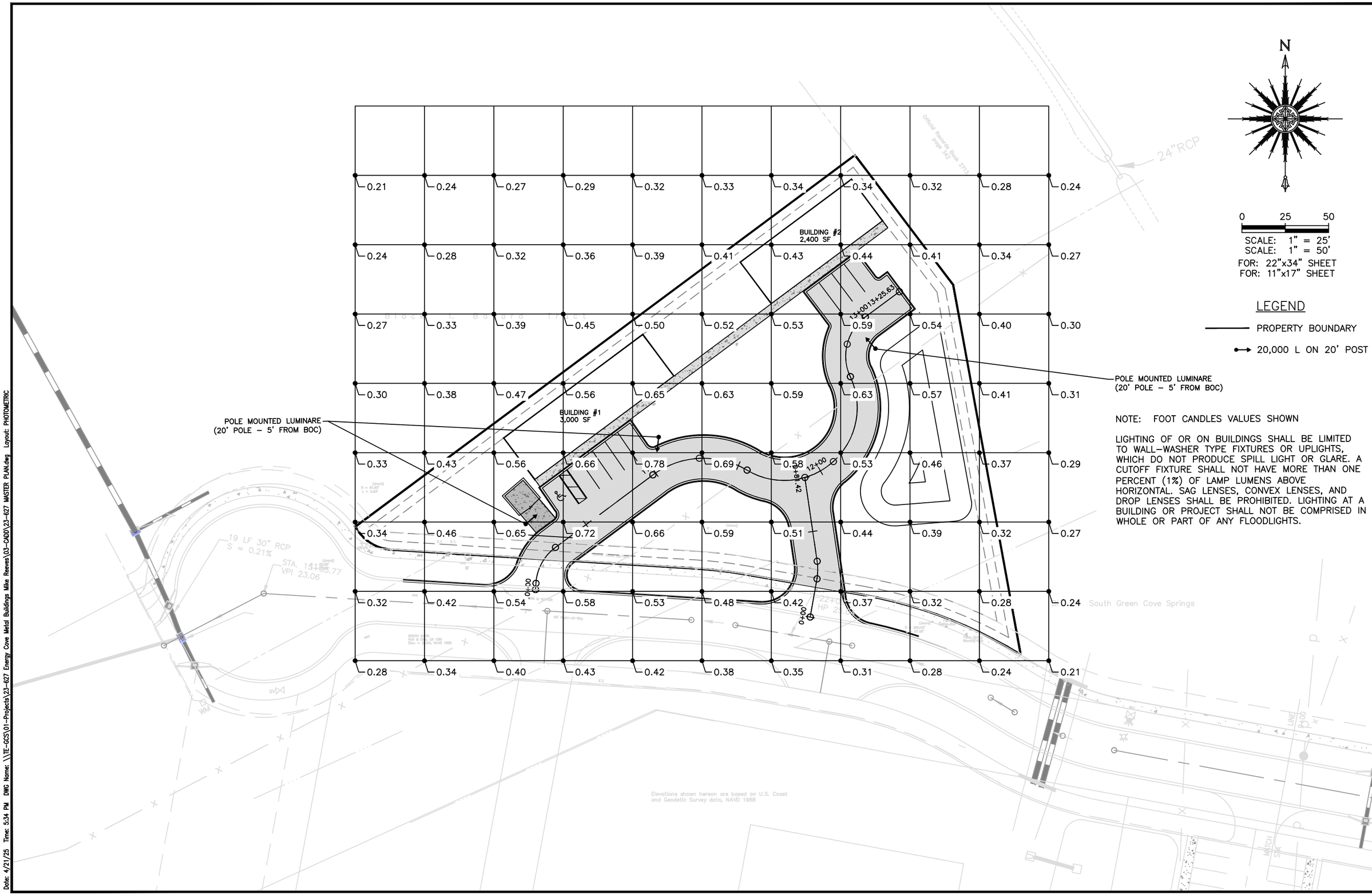

NOTE: FOOT CANDLES VALUES SHOWN

LIGHTING OF OR ON BUILDINGS SHALL BE LIMITED TO WALL–WASHER TYPE FIXTURES OR UPLIGHTS, WHICH DO NOT PRODUCE SPILL LIGHT OR GLARE. A CUTOFF FIXTURE SHALL NOT HAVE MORE THAN ONE PERCENT (1%) OF LAMP LUMENS ABOVE HORIZONTAL. SAG LENSES, CONVEX LENSES, AND DROP LENSES SHALL BE PROHIBITED. LIGHTING AT A BUILDING OR PROJECT SHALL NOT BE COMPRISED IN WHOLE OR PART OF ANY FLOODLIGHTS.

TOCOL Engineering, LLC
714 NORTH ORANGE AVENUE, GREEN COVE SPRINGS, FL 32043
PH: 904-215-1388 E.B. NUMBER: 26383

ENGINEER OF RECORD
JOHN J. MAHONEY III
FLORIDA REGISTRATION NUMBER: 40177

WAREHOUSE BUILDING
FOR
MIKE REEVES
PHOTOMETRIC PLAN

REVISIONS

PLOT DATE:
DRAWN BY:
DESIGNED BY:
CHECKED BY:
SCALE:
JOB NO.:

SHEET NO.
12

Date: 4/21/25 Time: 5:34 PM DWG Name: \\TE-GCS\01-Projects\23-627 Energy Cove Metal Buildings Mike Reeves\03-CADD\23-627 MASTER PLAN.dwg Layout: PHOTOMETRIC

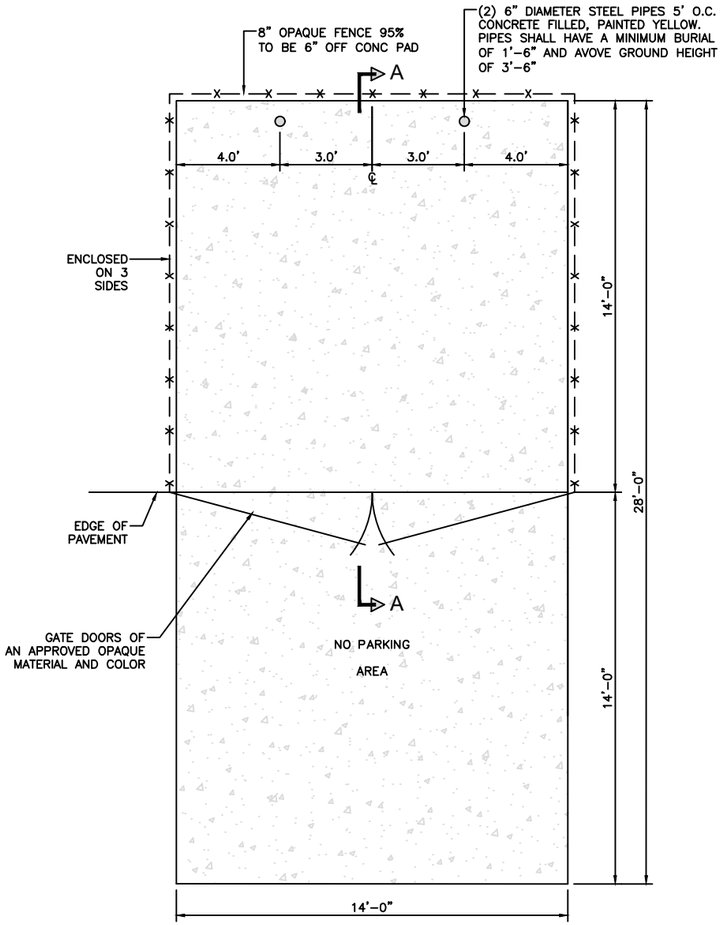

DUMPSTER PAD DETAIL – PLAN

N.T.S.

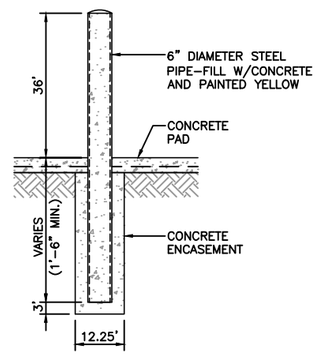

TYPICAL BOLLARD DETAIL

N.T.S.

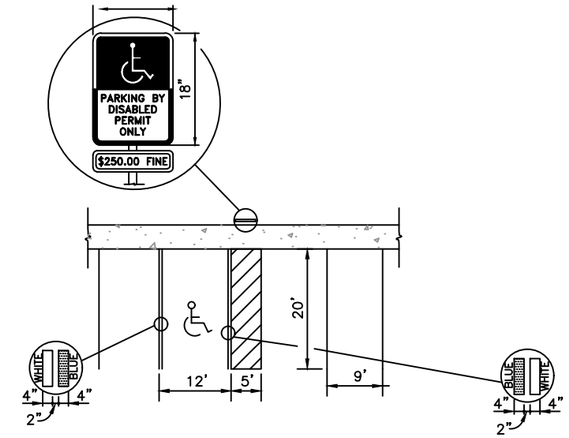

NOTE

EACH SUCH PARKING SPACE SHALL BE CONSPICUOUSLY OUTLINED IN BLUE PAINT, AND SHALL BE POSTED AND MAINTAINED WITH A PERMANENT, ABOVE-GRADE SIGN BEARING THE INTERNATIONAL SYMBOL OF ACCESSIBILITY OR THE CAPTION "PARKING BY DISABLED PERMIT ONLY", OR BEARING BOTH SUCH SYMBOLS AND CAPTION. SUCH SIGNS SHALL NOT BE OBSCURED BY A VEHICLE PARKED IN THE SPACE. ALL HANDICAPPED PARKING SPACES MUST BE DESIGNED AND MARKED IN ACCORDANCE WITH THE STANDARDS ADOPTED BY THE DEPARTMENT OF TRANSPORTATION.

HANDICAPPED SPACE DETAIL

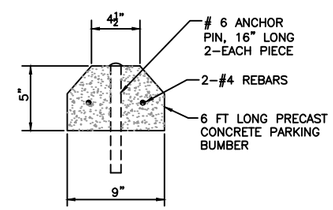

CONCRETE PARKING BLOCK

N.T.S.

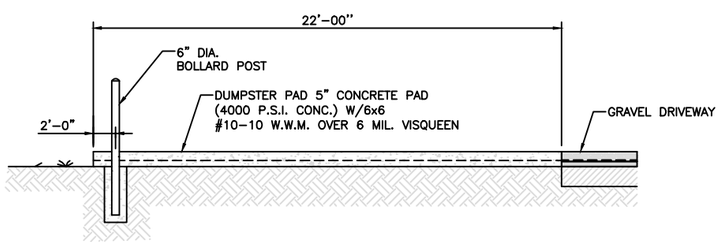

NOTES:

1. MAXIMUM ANGLE OF CONTAINER PAD TO DIRECTION OF AISLE TO BE 30'.
2. AREA TO BE FREE OF OVERHEAD LINES AND WIRES.
3. DUMPSTER PAD TO BE A MINIMUM OF 12' WIDE FOR DUMPSTER RECYCLING.
4. APPLICANT TO PROVIDE A SIDE ELEVATION TO DEMONSTRATE COLOR, MATERIAL AND DESIGN CONSISTANCY WITH THE PRINCIPAL BUILDING.
5. DRAINAGE PATTERNS AROUND PADS SHALL BE SUBJECT TO CITY REVIEW AND APPROVAL.
6. INGRESS AND EGRESS ROUTES TO/FROM DUMPSTER PADS SHALL BE IN ACCORDANCE WITH WASTE HANDLING CONTRACTORS REQUIREMENTS.

DUMPSTER PAD DETAIL – SECTION

N.T.S.

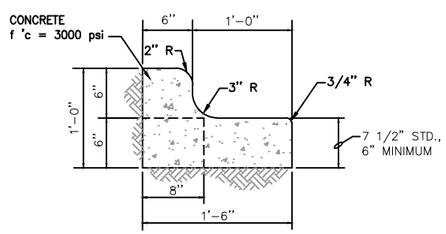

NOTE:
WHEN USED ON HIGH SIDE OF ROADWAYS, THE CROSS SLOPE OF THE GUTTER SHALL MATCH THE CROSS SLOPE OF THE ADJACENT PAVEMENT AND THE THICKNESS OF THE LIP SHALL BE 6", UNLESS OTHERWISE SHOWN ON PLANS.

STANDARD TYPE CURB & GUTTER

N.T.S.

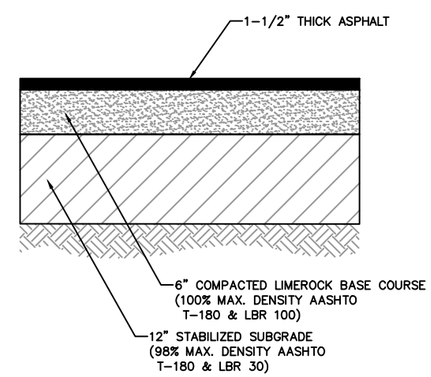

NOTE:
UNDERCUT ALL UNSUITABLE MATERIAL AND BACKFILL WITH CLEAN FREE–DRAINING SAND (BOTTOM OF CUT SHALL BE 24" MIN. BELOW FINISH GRADE)

NEW ASPHALT PAVEMENT SECTION

N.T.S.

TOCOI Engineering, LLC
714 NORTH ORANGE AVENUE, GREEN COVE SPRINGS, FL 32043
PH: 904-215-1388 E.B. NUMBER: 26383

ENGINEER OF RECORD
JOHN J. MAHONEY III
FLORIDA REGISTRATION NUMBER: 40177

WAREHOUSE BUILDING
FOR
MIKE REEVES

MISCELLANEOUS DETAILS

REVISIONS

PLOT DATE:
DRAWN BY:
DESIGNED BY:
CHECKED BY:
SCALE:
JOB NO.:

SHEET NO.
13A

Date: 4/9/25 Time: 4:44 PM DWG Name: \\TE-GCS\01-Projects\23-627 Energy Cove Metal Buildings Mike Reeves\03-CADD\23-627 MISC DETAILS 2.dwg Layout: MISC. DETAILS

	A	B	C	D	E
CONTROL STRUCTURES	GRATE	SLOT	ORIFICE	PIPE INV.	BOTTOM INV.
POND 1 (S-6)	20.00	19.20	18.00	17.90	17.00

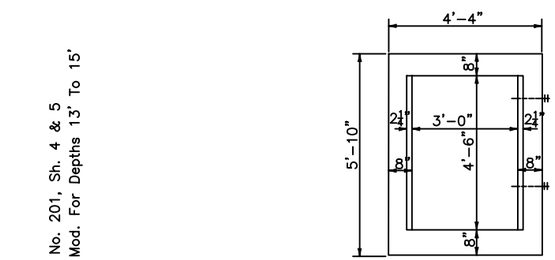

TOP

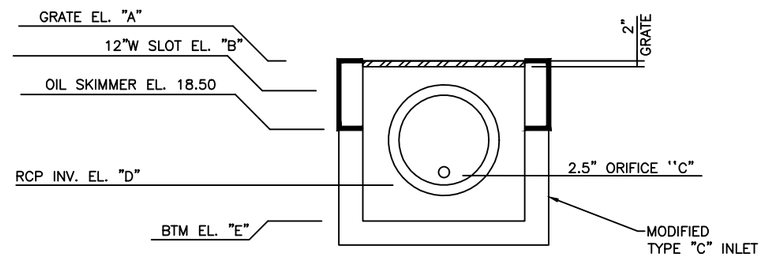

FRONT ELEVATION

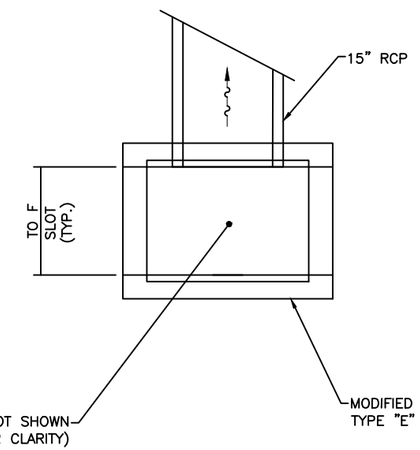

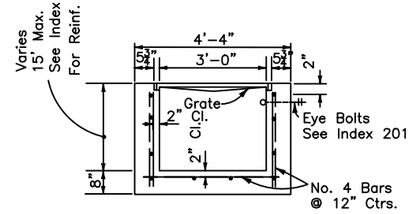

SECTION

Recommended Maximum Pipe Size :
3' - 0" Wall - 24" Pipe
4' - 6" Wall - 42" Pipe

NOTE
INLETS WITH SLOTS GREATER THAN 6" SHALL BE CONSTRUCTED WITH HORIZONTAL BARS AT THE MAXIMUM VERTICAL SPACING OF 6-INCHES. 1" DIA. GALVANIZED PIPE IMBEDDED 2" IN PRECAST STRUCTURE OR OTHER APPROVED METHOD.

STORM SEWER
TYPE "E" INLET
N.T.S.

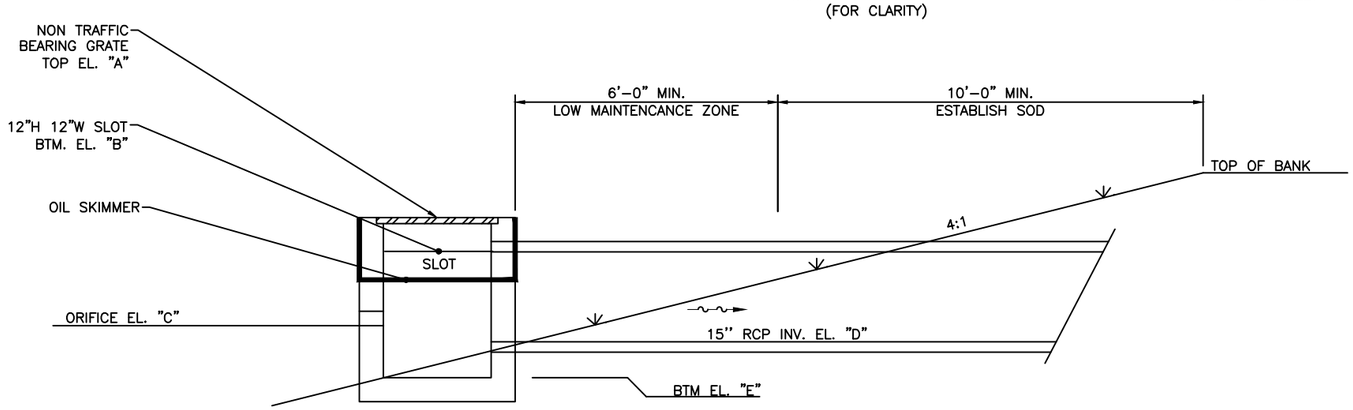

MODIFIED STORM SEWER
TYPE "C" INLET
POND OUTFALL-CONTROL STRUCTURE
N.T.S.

NOTE
INLETS WITH SLOTS GREATER THAN 6" SHALL BE CONSTRUCTED WITH HORIZONTAL BARS AT THE MAXIMUM VERTICAL SPACING OF 6-INCHES. 1" DIA. GALVANIZED PIPE IMBEDDED 2" IN PRECAST STRUCTURE OR OTHER APPROVED METHOD.

TOCOI Engineering, LLC
714 NORTH ORANGE AVENUE, GREEN COVE SPRINGS, FL 32043
PH: 904-215-1388 E.B. NUMBER: 26383

ENGINEER OF RECORD
JOHN J. MAHONEY III
FLORIDA
REGISTRATION NUMBER: 40177

WAREHOUSE BUILDING
FOR
MIKE REEVES

MISCELLANEOUS DETAILS

REVISIONS

PLOT DATE:
DRAWN BY:
DESIGNED BY:
CHECKED BY:
SCALE:
JOB NO.:

SHEET NO.
13B

Date: 4/10/25 Time: 3:06 PM DWG Name: \\TE-GCS\01-Projects\23-627 Energy Cove Metal Buildings Mike Reeves\03-CADD\23-627 MISC DETAILS 2.dwg Layout: MISC. DETAILS (2)

No.	DESCRIPTION	POND-1
A	TOB	21.00
B	DESIGN WATER (DHW) 100-YR	19.87
C	DHW 25-YR	19.52
D	NORMAL WATER LEVEL (NWL)	18.00
E	MEAN ANNUAL WATER LEVEL (MAWL)	18.97
F	POND BOTTOM	15.00

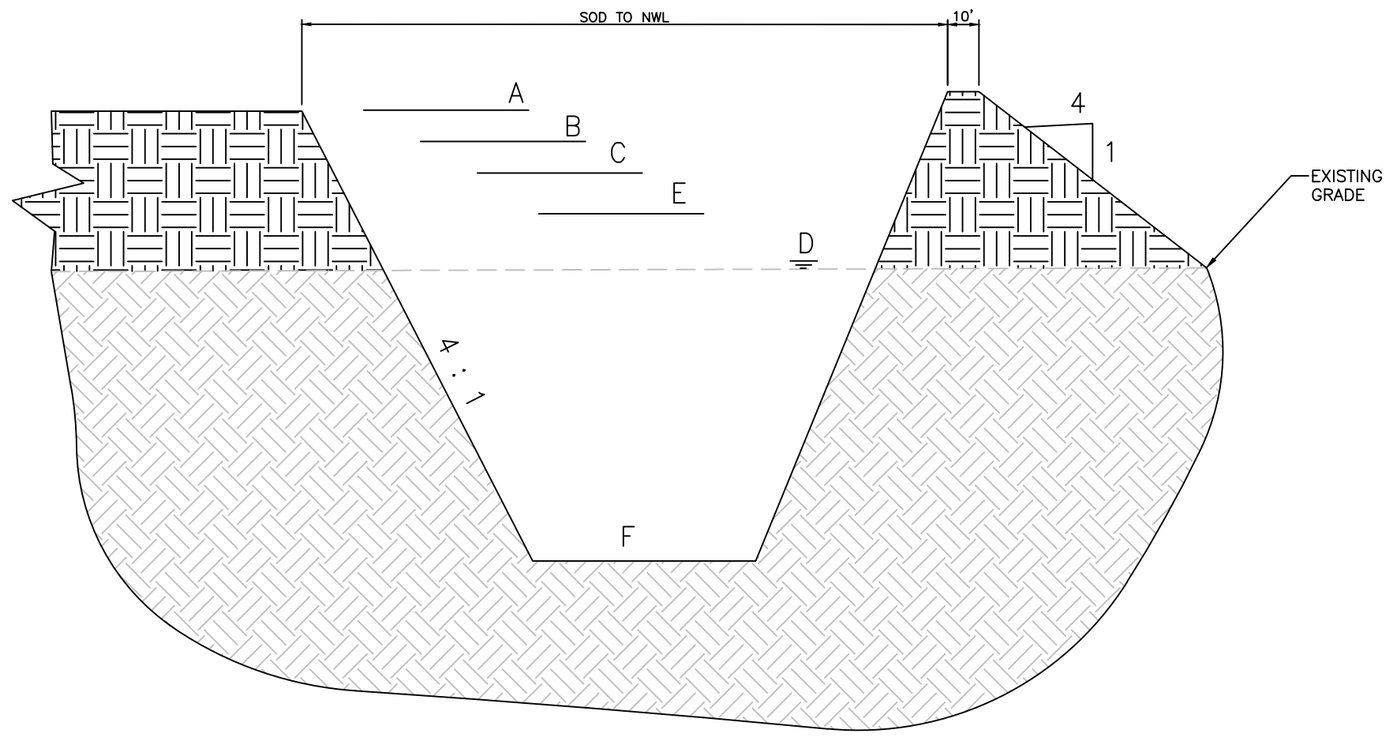

POND CROSS SECTION

N.T.S

TOCOI Engineering, LLC
714 NORTH ORANGE AVENUE, GREEN COVE SPRINGS, FL 32043
PH: 904-215-1308 E.B. NUMBER: 26383

ENGINEER OF RECORD
JOHN J. MAHONEY III
FLORIDA
REGISTRATION NUMBER: 40177

WAREHOUSE BUILDING
FOR
MIKE REEVES

MISCELLANEOUS DETAILS

REVISIONS

PLOT DATE:
DRAWN BY:
DESIGNED BY:
CHECKED BY:
SCALE:
JOB NO.:

SHEET NO.
13C

Date: 4/9/25 Time: 4:45 PM DWG Name: \\TE-GCS\01-Projects\23-627 Energy Cove Metal Buildings Mike Reeves\03-CADD\23-627 MISC DETAILS 2.dwg Layout: MISC. DETAILS (3)

STORM WATER POLLUTION PREVENTION PLAN

CITY'S REQUIREMENTS

SITE DESCRIPTION

PROJECT NAME AND LOCATION:
WAREHOUSE METAL BUILDING
ENERGY COVE COURT
GREEN COVE SPRINGS, FL 32043

OWNER NAME AND ADDRESS:
MIKE REEVES
80893 SORIA RAVINES RD
170 COLLEGE DRIVE SUITE 1
ORANGE PARK, FL 32043

DESCRIPTION

SOIL DISTURBING ACTIVITIES WILL INCLUDE:
CLEARING AND GRUBBING; EARTHWORK, PAVEMENT AND GRADING; STORM SEWER, UTILITIES, AND PREPARATION FOR FINAL PLANTING AND SEEDING.

RUNOFF CURVE NUMBERS:
1. PRE-CONSTRUCTION =
2. DURING CONSTRUCTION =
3. POST-CONSTRUCTION =

SOILS:
SEE SOIL BORING REPORT FOR SOILS DATA

SITE MAPS:
* SEE ATTACHED GRADING PLAN FOR PRE & POST DEVELOPMENT GRADES, AREAS OF SOILS, DISTURBANCE, LOCATION OF SURFACE WATERS, WETLANDS, PROTECTED AREAS, MAJOR STRUCTURAL AND NONSTRUCTURAL CONTROLS AND STORM WATER DISCHARGE POINTS.
* SEE ATTACHED EROSION & TURBIDITY CONTROL PLAN FOR LOCATION OF TEMPORARY STABILIZATION PRACTICES, AND TURBIDITY BARRIERS
* SEE GENERAL NOTES FOR REQUIRMENTS FOR TEMPORARY AND PERMANENT STABILIZATION.

SITE AREA:
1. TOTAL AREA OF SITE =
2. TOTAL AREA TO BE DISTURBED =

NAME OF RECEIVING WATERS:

CONTROLS

THIS PLAN UTILIZES BEST MANAGEMENT PRACTICES TO CONTROL EROSION AND TURBIDITY CAUSED BY STORM WATER RUN OFF. AN EROSION AND TURBIDITY PLAN HAS BEEN PREPARED TO INSTRUCT THE CONTRACTOR ON PLACEMENT OF THESE CONTROLS. IT IS THE CONTRACTORS RESPONSIBILITY TO INSTALL AND MAINTAIN THE CONTROLS PER PLAN AS WELL AS ENSURING THE PLAN IS PROVIDING THE PROPER PROTECTION AS REQUIRED BY FEDERAL, STATE AND LOCAL LAWS. REFER TO "CONTRACTORS RESPONSIBILITY" FOR A VERBAL DESCRIPTION OF THE CONTROLS THAT MAY BE IMPLEMENTED.

STORM WATER MANAGEMENT

STORM WATER DRAINAGE WILL BE PROVIDED BY (DESRIPTION:) __________
____

FOR THE PROJECT. AREAS WHICH ARE NOT TO BE CONSTRUCTED ON, BUT WILL BE REGRADED SHALL BE STABILIZED IMMEDIATELY AFTER GRADING IS COMPLETE, WHEN CONSTRUCTION IS COMPLETE, A TOTAL OF ____ ACRES WILL HAVE BEEN REGRADED, ____ ACRES LEFT UNDISTURBED. THE SITE DISCHARGES TO A WET DETENTION SYSTEM. WHERE PRACTICAL, TEMPORARY SEDIMENT BASINS WILL BE USED TO INTERCEPT SEDIMENT BEFORE ENTERING THE PERMANENT DETENTION BASIN. THE WET DETENTION SYSTEM IS DESIGNED WITH A ____ DAY MINIMUM RESIDENCE VOLUME. THIS IS IN ACCORDANCE WITH THE REQUIREMENTS SET FORTH BY THE ST. JOHNS RIVER WATER MANAGEMENT DISTRICT FOR THIS TYPE OF DEVELOPMENT AT THE TIME OF PERMITTING.

TIMING OF CONTROLS/MEASURES

REFER TO " CONTRACTORS RESPONSIBILITY" FOR THE TIMING OF CONTROL/MEASURES.

CERTIFICATION OF COMPLIANCE WITH FEDERAL, STATE AND LOCAL REGULATIONS

IN ACCORDANCE WITH FEDERAL, STATE AND LOCAL LAWS RELATED TO STORM WATER MANAGEMENT AND EROSION AND TURBIDITY CONTROLS, THE FOLLOWING PERMITS HAVE BEEN OBTAINED.

D.E.R. DREDGE/FILL PERMIT # ____________________
C.O.E. DREDGE/FILL PERMIT # ____________________
S.J.R.W.M.D. M.S.S.W. PERMIT #____________________

POLLUTION PREVENTION PLAN CERTIFICATION

I CERTIFY UNDER PENALTY OF LAW THAT THIS DOCUMENT AND ALL ATTACHMENTS WERE PREPARED UNDER MY DIRECTION OR SUPERVISION IN ACCORDANCE WITH A SYSTEM DESIGNED TO ASSURE THAT QUALIFIED PERSONNEL PROPERLY GATHERED AND EVALUATED THE INFORMATION SUBMITTED. BASED ON MY INQUIRY OF THE PERSON OR PERSONS WHO MANAGE THE SYSTEM, OR THOSE PERSONS DIRECTLY RESPONSIBLE FOR GATHERING THE INFORMATION, THE INFORMATION SUBMITTED IS, TO THE BEST OF MY KNOWLEDGE AND BELIEF, TRUE, ACCURATE, AND COMPLETE. I AM AWARE THAT THERE ARE SIGNIFICANT PENALTIES FOR SUBMITTING FALSE INFORMATION, INCLUDING THE POSSIBILITY OF FINE AND IMPRISONMENT FOR KNOWING VIOLATIONS.

SIGNED:____
CITY ENGINEER

CONTRACTOR'S REQUIREMENTS

GENERAL

THE CONTRACTOR SHALL AT A MINIMUM IMPLEMENT THE CONTRACTOR'S REQUIREMENTS OUTLINED BELOW AND THOSE MEASURES SHOWN ON THE EROSION AND TURBIDITY CONTROL PLAN. IN ADDITION THE CONTRACTOR SHALL UNDERTAKE ADDITIONAL MEASURES REQUIRED TO BE IN COMPLIANCE WITH APPLICABLE PERMIT CONDITIONS AND STATE WATER QUALITY STANDARDS. DEPENDING ON THE NATURE OF MATERIALS AND METHODS OF CONSTRUCTION THE CONTRACTOR MAY BE REQUIRED TO ADD FLOCCULANTS TO THE RETENTION SYSTEM PRIOR TO PLACING THE SYSTEM INTO OPERATION.

SEQUENCE OF MAJOR ACTIVITIES:

THE ORDER OF ACTIVITIES WILL BE AS FOLLOWS:

1. INSTALL STABILIZED CONSTRUCTION ENTRANCE
2. INSTALL SILT FENCES AND HAY BALES AS REQUIRED
3. CLEAR AND GRUB FOR DIVERSION SWALES/DIKES AND SEDIMENT BASIN
4. CONSTRUCT SEDIMENTATION BASIN
5. CONTINUE CLEARING AND GRUBBING
6. STOCK PILE TOP SOIL IF REQUIRED
7. PERFORM PRELIMINARY GRADING ON SITE AS REQUIRED
8. STABILIZE DENUDED AREAS AND STOCKPILES AS SOON AS PRACTICABLE
9. INSTALL UTILITIES, STORM SEWER, CURBS & GUTTER.
10. APPLY BASE TO PROJECT
11. COMPLETE GRADING AND INSTALL PERMANENT SEEDING/SOD AND PLANTING
12. COMPLETE FINAL PAVING
13. REMOVE ACCUMULATED SEDIMENT FROM BASINS
14. WHEN ALL CONSTRUCTION ACTIVITY IS COMPLETE AND THE SITE IS STABILIZED, REMOVE ANY TEMPORARY DIVERSION SWALES/DIKES AND RESEED/SOD AS REQUIRED

TIMING OF CONTROLS/MEASURES

AS INDICATED IN THE SEQUENCE OF MAJOR ACTIVITIES, THE SILT FENCES AND HAY BALES, STABILIZED CONSTRUCTION ENTRANCE AND SEDIMENT BASIN WILL BE CONSTRUCTED PRIOR TO CLEARING OR GRADING OF ANY OTHER PORTIONS OF THE SITE. STABILIZATION MEASURES SHALL BE INITIATED AS SOON AS PRACTICAL IN PORTIONS OF THE SITE WHERE CONSTRUCTION ACTIVITIES HAVE TEMPORARILY OR PERMANENTLY CEASED. ONCE CONSTRUCTION ACTIVITY CEASES PERMANENTLY IN AN AREA, THAT AREA WILL BE STABILIZED PERMANENTLY IN ACCORDANCE WITH THE PLANS. AFTER THE ENTIRE SITE IS STABILIZED, THE ACCUMULATED SEDIMENT WILL BE REMOVED FROM THE SEDIMENT TRAPS AND THE EARTH DIKE/SWALES WILL BE REGRADED/REMOVED AND STABILIZED IN ACCORDANCE WITH THE EROSION & TURBIDITY CONTROL PLAN.

CONTROLS

IT IS THE CONTRACTORS RESPONSIBILITY TO IMPLEMENT THE EROSION AND TURBIDITY CONTROLS AS SHOWN ON THE EROSION AND TURBIDITY CONTROL PLAN. IT IS ALSO THE CONTRACTORS RESPONSIBILITY TO ENSURE THESE CONTROLS ARE PROPERLY INSTALLED , MAINTAINED AND FUNCTIONING PROPERLY TO PREVENT TURBID OR POLLUTED WATER FROM LEAVING THE PROJECT SITE. THE CONTRACTOR WILL ADJUST THE EROSION AND TURBIDITY CONTROLS SHOWN ON THE EROSON AND TURBIDITY CONTROL PLAN AND ADD ADDITIONAL CONTROL MEASURES, AS REQUIRED,TO ENSURE THE SITE MEETS ALL FEDERAL, STATE AND LOCAL EROSION AND TURBIDITY CONTROL REQUIREMENTS. THE FOLLOWING BEST MANAGEMENT PRACTICES WILL BE IMPLEMENTED BY THE CONTRACTOR AS REQUIRED BY THE EROSION AND TURBIDITY CONTROL PLAN AND AS REQUIRED TO MEET THE EROSION AND TURBIDITY REQUIREMENTS IMPOSED ON THE PROJECT SITE BY THE REGULATORY AGENCIES.

EROSION AND SEDIMENT CONTROLS
STABILIZATION PRACTICES

1. HAY BALE BARRIER: HAY BALE BARRIERS CAN BE USED BELOW DISTURBED AREAS SUBJECT TO SHEET AND RILL EROSION WITH THE FOLLOWING LIMITATIONS:
   A. WHERE THE MAXIMUM SLOPE BEHIND THE BARRIER IS 33 PERCENT.
   B. IN MINOR SWALES OR DITCH LINES WHERE THE MAXIMUM CONTRIBUTING DRAINAGE AREA IS NO GREATER THAN 2 ACRES.
   C. WHERE EFFECTIVENESS IS REQUIRED FOR LESS THAN 3 MONTHS.
   D. EVERY EFFORT SHOULD BE MADE TO LIMIT THE USE OF STRAW BALE BARRIERS CONSTRUCTED IN LIVE STREAMS OR IN SWALES WHERE THERE IS THE POSSIBILITY OF A WASHOUT. IF NECESSARY, MEASURES SHALL BE TAKEN TO PROPERLY ANCHOR BALES TO INSURE AGAINST WASHOUT.

   REFER TO CITY STANDARD DETAIL D-913 FOR CONSTRUCTING THE HAY BALE BARRIER. ALSO REFER TO D-901, D-911 AND D-12 FOR PROPER LOCATION, MATERIAL & USAGE.
2. FILTER FABRIC BARRIER: FILTER FABRIC BARRIERS CAN BE USED BELOW DISTURBED AREAS SUBJECT TO SHEET AND RILL EROSION WITH THE FOLLOWING LIMITATIONS:
   A. WHERE THE MAXIMUM SLOPE BEHIND THE BARRIER IS 33 PERCENT.
   B. IN MINOR SWALES OR DITCH LINES WHERE THE MAXIMUM CONTRIBUTING DRAINAGE AREA IS NO GREATER THAN 2 ACRES.

   REFER TO CITY STANDARD DETAIL D-910 FOR PROPER CONSTRUCTION OF THE FILTER FABRIC BARRIER.
3. BRUSH BARRIER WITH FILTER FABRIC: BRUSH BARRIER MAY BE USED BELOW DISTURBED AREAS SUBJECT TO SHEET AND RILL EROSION WHERE ENOUGH RESIDUE MATERIAL IS AVAILABLE ON SITE.
4. LEVEL SPREADER: A LEVEL SPREADER MAY BE USED WHERE SEDIMENT-FREE STORM RUNOFF IS INTERCEPTED AND DIVERTED AWAY FROM THE GRADED AREAS ONTO UNDISTURBED STABILIZED AREAS. THIS PRACTICE APPLIES ONLY IN THOSE SITUATIONS WHERE THE SPREADER CAN BE CONSTRUCTED ON UNDISTURBED SOIL AND THE AREA BELOW THE LEVEL LIP IS STABILIZED. THE WATER SHOULD NOT BE ALLOWED TO RECONCENTRATE AFTER RELEASE. LEVEL SPREADER SHALL BE CONSTRUCTED IN ACCORDANCE TO CITY STANDARD DETAIL D-914.
5. STOCKPILING MATERIAL: NO EXCAVATED MATERIAL SHALL BE STOCKPILED IN SUCH A MANNER AS TO DIRECT RUNOFF DIRECTLY OFF THE PROJECT SITE INTO ANY ADJACENT WATER BODY OR STORM WATER COLLECTION FACILITY.
6. EXPOSED AREA LIMITATION: THE SURFACE AREA OF OPEN, RAW ERODIBLE SOIL EXPOSED BY CLEARING AND GRUBBING OPERATIONS OR EXCAVATION AND FILLING OPERATIONS SHALL NOT EXCEED 10 ACRES. THIS REQUIREMENT MAY BE WAIVED FOR LARGE PROJECTS WITH AN EROSION CONTROL PLAN WHICH DEMONSTRATES THAT OPENING OF ADDITIONAL AREAS WILL NOT SIGNIFICANTLY AFFECT OFF-SITE DEPOSIT OF SEDIMENTS.
7. INLET PROTECTION: INLETS AND CATCH BASINS WHICH DISCHARGE DIRECTLY OFF-SITE SHALL BE PROTECTED FROM SEDIMENT-LADEN STORM RUNOFF UNTIL THE COMPLETION OF ALL CONSTRUCTION OPERATIONS THAT MAY CONTRIBUTE SEDIMENT TO THE INLET.
8. TEMPORARY SEEDING: AREAS OPENED BY CONSTRUCTION OPERATIONS AND THAT ARE NOT ANTICIPATED TO BE RE-EXCAVATED OR DRESSED AND RECEIVE FINAL GRASSING TREATMENT WITHIN 30 DAYS SHALL BE SEEDED WITH A QUICK GROWING GRASS SPECIES WHICH WILL PROVIDE AN EARLY COVER DURING THE SEASON IN WHICH IT IS PLANTED AND WILL NOT LATER COMPETE WITH THE PERMANENT GRASSING.
9. TEMPORARY SEEDING AND MULCHING: SLOPES STEEPER THAN 6:1 THAT FALL WITHIN THE CATEGORY ESTABLISHED IN PARAGRAPH 8 ABOVE SHALL ADDITIONALLY RECEIVE MULCHING OF APPROXIMATELY 2 INCHES LOOSE MEASURE OF MULCH MATERIAL CUT INTO THE SOIL OF THE SEEDED AREA ADEQUATE TO PREVENT MOVEMENT OF SEED AND MULCH.
10. TEMPORARY GRASSING: THE SEEDED OR SEEDED AND MULCHED AREA(S) SHALL BE ROLLED AND WATERED OR HYDROMULCHED OR OTHER SUITABLE METHODS IF REQUIRED TO ASSURE OPTIMUM GROWING CONDITIONS FOR THE ESTABLISHMENT OF A GOOD GRASS COVER. TEMPORARY GRASSING SHALL BE THE SAME MIX & AMOUNT REQUIRED FOR PERMANENT GRASSING IN THE CONTRACT SPECIFICATIONS.
11. TEMPORARY REGRASSING : IF, AFTER 14 DAYS FROM SEEDING, THE TEMPORARY GRASSED AREAS HAVE NOT ATTAINED A MINIMUM OF 75 PERCENT GOOD GRASS COVER, THE AREA WILL BE REWORKED AND ADDITIONAL SEED APPLIED SUFFICIENT TO ESTABLISH THE DESIRED VEGETATIVE COVER.
12. MAINTENANCE: ALL FEATURES OF THE PROJECT DESIGNED AND CONSTRUCTED TO PREVENT EROSION AND SEDIMENT SHALL BE MAINTAINED DURING THE LIFE OF THE CONSTRUCTION SO AS TO FUNCTION AS THEY WERE ORIGINALLY DESIGNED AND CONSTRUCTED.
13. PERMANENT EROSION CONTROL: THE EROSION CONTROL FACILITIES OF THE PROJECT SHOULD BE DESIGNED TO MINIMIZE THE IMPACT ON THE OFFSITE FACILITIES.
14. PERMANENT SEEDING: ALL AREAS WHICH HAVE BEEN DISTURBED BY CONSTRUCTION WILL, AS A MINIMUM, BE SEEDED. THE SEEDING MIX MUST PROVIDE BOTH LONG-TERM VEGETATION AND RAPID GROWTH SEASONAL VEGETATION. SLOPES STEEPER THAN 4:1 SHALL BE SEEDED AND MULCHED OR SODDED.

STRUCTURAL PRACTICES

1. TEMPORARY DIVERSION DIKE: TEMPORARY DIVERSION DIKES MAY BE USED TO DIVERT RUNOFF THROUGH A SEDIMENT-TRAPPING FACILITY. AND IT SHALL BE CONSTRUCTED IN ACCORDANCE TO D-914.
2. TEMPORARY SEDIMENT TRAP: A SEDIMENT TRAP SHALL BE INSTALLED IN AN DRAINAGEWAY AT A STORM DRAIN INLET OR AT OTHER POINTS OF DISCHARGE FROM A DISTURBED AREA.
   THE FOLLOWING SEDIMENT TRAPS MAY BE CONSTRUCTED EITHER INDEPENDANTLY OR IN CONJUNCTION WITH A TEMPORARY DIVERSION DIKE:
   A. BLOCK & GRAVEL SEDIMENT FILTER - THIS PROTECTION IS APPLICABLE WHERE HEAVY FLOWS AND/OR WHERE AN OVERFLOW CAPACITY IS NECESSARY TO PREVENT EXCESSIVE PONDING AROUND THE STRUCTURE. REFER TO D-902 FOR CONSTRUCTION OF A CURB INLET SEDIMENT FILTER, AND D-904 FOR CONSTRUCTION OF A DROP INLET SEDIMENT FILTER.
   B. GRAVEL SEDIMENT TRAP - THIS PROTECTION IS APPLICABLE WHERE HEAVY CONCENTRATED FLOWS ARE EXPECTED, BUT NOT WHERE PONDING AROUND THE STRUCTURE MIGHT CAUSE EXCESSIVE INCONVENIENCE OR DAMAGE TO ADJACENT STRUCTURES & UNPROTECTED AREAS. REFER TO D-903 FOR CONSTRUCTION OF CURB INLET & DROP SEDIMENT TRAP.
   C. DROP INLET SEDIMENT TRAP - THIS PROTECTION IS APPLICABLE WHERE THE INLET DRAINS A RELATIVELY FLAT AREA ($S < 5\%$) AND WHERE SHEET OR OVERLAND FLOWS ($Q < 0.5$ CFS) ARE TYPICAL. THIS METHOD SHALL NOT APPLY TO INLETS RECEIVING CONCENTRATED FLOWS SUCH AS IN STREET OR HIGHWAY MEDIANS. REFER TO D-905 FOR CONSTRUCTION OF HAY BALE & FABRIC SEDIMENT FILTER.
3. OUTLET PROTECTION: APPLICABLE TO THE OUTLETS OF ALL PIPES AND PAVED CHANNEL SECTIONS WHERE THE FLOW COULD CAUSE EROSION & SEDIMENT PROBLEM TO THE RECEIVING WATER BODY. SILT FENCES & HAY BALES ARE TO BE INSTALLED IMMEDIATELY DOWNSTREAM OF THE DISCHARING STRUCTURE AS SHOWN ON THE OUTLET PROTECTION DETAIL.
4. SEDIMENT BASIN: WILL BE CONSTRUCTED AT THE COMMON DRAINAGE LOCATIONS THAT SERVE AN AREA WITH 10 OR MORE DISTURBED ACRES AT ONE TIME, THE PROPOSED STORM WATER PONDS (OR TEMPORARY PONDS) WILL BE CONSTRUCTED FOR USE AS SEDIMENT BASINS. THESE SEDIMENT BASINS MUST PROVIDE A MINIMUM OF 3,600 CUBIC FEET OF STORAGE PER ACRE DRAINED UNTIL FINAL STABILIZATION OF THE SITE.

THE 3,600 CUBIC FEET OF STORAGE AREA PER ACRE DRAINED DOES NOT APPLY TO FLOWS FROM OFFSITE AREAS AND FLOWS FROM ONSITE AREAS THAT ARE EITHER UNDISTURBED OR HAVE UNDERGONE FINAL STABILIZATION WHERE SUCH FLOWS ARE DIVERTED AROUND BOTH THE DISTURBED AREA AND THE SEDIMENT BASIN. ANY TEMPORARY SEDIMENT BASINS CONSTRUCTED MUST BE BACKFILLED AND COMPACTED IN ACCORDANCE WITH THE SPECIFICATIONS FOR STRUCTURAL FILL. ALL SEDIMENT COLLECTED IN PERMANENT OR TEMPORARY SEDIMENT TRAPS MUST BE REMOVED UPON FINAL STABILIZATION.

OTHER CONTROLS

WASTE DISPOSAL

WASTE MATERIALS

ALL WASTE MATERIALS EXCEPT LAND CLEARING DEBRIS SHALL BE COLLECTED AND STORED IN A SECURELY LIDDED METAL DUMPSTER. THE DUMPSTER WILL MEET ALL LOCAL AND STATE SOLID WASTE MANAGEMENT REGULATIONS. THE DUMPSTER WILL BE EMPTIED AS NEEDED AND THE TRASH WILL BE HAULED TO A STATE APPROVED LANDFILL. ALL PERSONNEL WILL BE INSTRUCTED REGARDING THE CORRECT PROCEDURE FOR WASTE DISPOSAL. NOTICES STATING THESE PRACTICES WILL BE POSTED AT THE CONSTRUCTION SITE BY THE CONSTRUCTION SUPERINTENDENT, THE INDIVIDUAL WHO MANAGES THE DAY-TO-DAY SITE OPERATIONS, WILL BE RESPONSIBLE FOR SEEING THAT THESE PROCEDURES ARE FOLLOWED.

HAZARDOUS WASTE

ALL HAZARDOUS WASTE MATERIALS WILL BE DISPOSED OF IN THE MANNER SPECIFIED BY LOCAL OR STATE REGULATION OR BY THE MANUFACTURER. SITE PERSONNEL WILL BE INSTRUCTED IN THESE PRACTICES AND THE SITE SUPERINTENDENT, THE INDIVIDUAL WHO MANAGES DAY-TO-DAY SITE OPERATIONS,WILL BE RESPONSIBLE FOR SEEING THAT THESE PRACTICES ARE FOLLOWED.

SANITARY WASTE

ALL SANITARY WASTE WILL BE COLLECTED FROM THE PORTABLE UNITS AS NEEDED TO PREVENT POSSIBLE SPILLAGE. THE WASTE WILL BE COLLECTED AND DEPOSED OF IN ACCORDANCE WITH STATE AND LOCAL WASTE DISPOSAL REGULATIONS FOR SANITARY SEWER OR SEPTIC SYSTEMS.

OFFSITE VEHICLE TRACKING

A STABILIZED CONSTRUCTION ENTRANCE WILL BE PROVIDED TO HELP REDUCE VEHICLE TRACKING OF SEDIMENTS. THE PAVED STREET ADJACENT TO THE SITE ENTRANCE WILL BE SWEPT DAILY TO REMOVE ANY EXCESS MUD, DIRT OR ROCK TRACKED FROM THE SITE. DUMP TRUCKS HAULING MATERIAL FROM THE CONSTRUCTION SITE WILL BE COVERED WITH A TARPAULIN.

INVENTORY FOR POLLUTION PREVENTION PLAN

THE MATERIALS OR SUBSTANCES LISTED BELOW ARE EXPECTED TO BE PRESENT ONSITE DURING CONSTRUCTION:

☐ Concrete	☐ Fertilizers	☐ Wood
☐ Asphalt	☐ Petroleum Based Products	☐ Masonry Blocks
☐ Tar	☐ Cleaning Solvents	☐ Roofing Materials
☐ Detergents	☐ Paints	☐ Metal Studs
☐ ________	☐ ________	☐ ________

SPILL PREVENTION

MATERIAL MANAGEMENT PRACTICES

THE FOLLOWING ARE THE MATERIAL MANAGEMENT PRACTICES THAT WILL BE USED TO REDUCE THE RISK OF SPILLS OR OTHER ACCIDENTAL EXPOSURE OF MATERIALS AND SUBSTANCES TO STORM WATER RUNOFF.

GOOD HOUSEKEEPING

THE FOLLOWING GOOD HOUSEKEEPING PRACTICES WILL BE FOLLOWED ONSITE DURING THE CONSTRUCTION PROJECT.

* AN EFFORT WILL BE MADE TO STORE ONLY ENOUGH PRODUCT REQUIRED TO DO THE JOB.
* ALL MATERIALS STORED ONSITE WILL BE STORED IN A NEAT, ORDERLY MANNER IN THEIR APPROPRIATE CONTAINERS AND, IF POSSIBLE, UNDER A ROOF OR OTHER ENCLOSURE.
* PRODUCTS WILL BE KEPT IN THEIR ORIGINAL CONTAINERS WITH THE ORIGINAL MANUFACTURER'S LABEL.
* SUBSTANCES WILL NOT BE MIXED WITH ONE ANOTHER UNLESS RECOMMENDED BY THE MANUFACTURER.
* WHENEVER POSSIBLE, ALL OF A PRODUCT WILL BE USED UP BEFORE DISPOSING OF THE CONTAINER.
* MANUFACTURER'S RECOMMENDATIONS FOR PROPER USE AND DISPOSAL WILL BE FOLLOWED.
* THE SITE SUPERINTENDENT WILL INSPECT DAILY TO ENSURE MATERIALS ONSITE RECEIVE PROPER USE AND DISPOSAL.

HAZARDOUS PRODUCTS

THESE PRACTICES ARE USED TO REDUCE THE RISKS ASSOCIATED WITH HAZARDOUS MATERIALS.

* PRODUCTS WILL BE KEPT IN ORIGINAL CONTAINERS UNLESS THEY ARE NOT RESEALABLE.
* ORIGINAL LABELS AND MATERIAL SAFETY DATA WILL BE RETAINED; THEY CONTAIN IMPORTANT PRODUCT INFORMATION.
* IF SURPLUS PRODUCT MUST BE DISPOSED OF, MANUFACTURER'S OR LOCAL AND STATE RECOMMENDED METHODS FOR PROPER DISPOSAL WILL BE FOLLOWED.

PRODUCT SPECIFIC PRACTICES
THE FOLLOWING PRODUCT SPECIFIC PRACTICES WILL BE FOLLOWED ONSITE:

PETROLEUM PRODUCTS

ALL ONSITE VEHICLES WILL BE MONITORED FOR LEAKS AND RECEIVE REGULAR PREVENTIVE MAINTENANCE TO REDUCE THE CHANCE OF LEAKAGE. PETROLEUM PRODUCTS WILL BE STORED IN TIGHTLY SEALED CONTAINERS WHICH ARE CLEARLY LABELED. ANY ASPHALT SUBSTANCES USED ONSITE WILL BE APPLIED ACCORDING TO THE MANUFACTURER'S RECOMMENDATIONS.

FERTILIZERS

FERTILIZERS USED WILL BE APPLIED ONLY IN THE MINIMUM AMOUNTS RECOMMENDED BY THE MANUFACTURER. ONCE APPLIED, FERTILIZER WILL BE WORKED INTO THE SOIL TO LIMIT EXPOSURE TO STORM WATER. STORAGE WILL BE IN A COVERED AREA. THE CONTENTS OF ANY PARTIALLY USED BAGS OF FERTILIZER WILL BE TRANSFERRED TO A SEALABLE PLASTIC BIN TO AVOID SPILLS.

PAINTS

ALL CONTAINERS WILL BE TIGHTLY SEALED AND STORED WHEN NOT REQUIRED FOR USE. EXCESS PAINT WILL NOT BE DISCHARGED TO THE STORM SEWER SYSTEM BUT WILL BE PROPERLY DISPOSED OF ACCORDING TO MANUFACTURERS' INSTRUCTIONS OR STATE AND LOCAL REGULATIONS.

CONCRETE TRUCKS

CONCRETE TRUCKS WILL NOT BE ALLOWED TO WASH OUT OR DISCHARGE SURPLUS CONCRETE OR DRUM WASH WATER ON THE SITE.

SPILL CONTROL PRACTICES

IN ADDITION TO THE GOOD HOUSEKEEPING AND MATERIAL MANAGEMENT PRACTICES DISCUSSED IN THE PREVIOUS SECTIONS OF THIS PLAN, THE FOLLOWING PRACTICES WILL BE FOLLOWED FOR SPILL PREVENTION AND CLEANUP:

MANUFACTURERS' RECOMMENDED METHODS FOR SPILL CLEANUP WILL BE CLEARLY POSTED ON SITE AND SITE PERSONNEL WILL BE MADE AWARE OF THE PROCEDURES AND THE LOCATION OF THE INFORMATION AND CLEANUP SUPPLIES.

MATERIALS AND EQUIPMENT NECESSARY FOR SPILL CLEANUP WILL BE KEPT IN THE MATERIAL STORAGE AREA ONSITE. EQUIPMENT AND MATERIALS WILL INCLUDE BUT NOT BE LIMITED TO BROOMS, DUST PANS, MOPS, RAGS, GLOVES, GOGGLES, LIQUID ABSORBENT (i.e. KITTY LITTER OR EQUAL), SAND, SAWDUST, AND PLASTIC AND METAL TRASH CONTAINERS SPECIFICALLY FOR THIS PURPOSE.

ALL SPILLS WILL BE CLEANED UP IMMEDIATELY AFTER DISCOVERY.

THE SPILL AREA WILL BE KEPT WELL VENTILATED AND PERSONNEL WILL WEAR APPROPRIATE PROTECTIVE CLOTHING TO PREVENT INJURY FROM CONTACT WITH A HAZARDOUS SUBSTANCE.

SPILL OF TOXIC OR HAZARDOUS MATERIAL WILL BE REPORTED TO THE APPROPRIATE STATE OR LOCAL GOVERNMENT AGENCY, REGARDLESS OF THE SIZE OF THE SPILL.

THE SPILL PREVENTION PLAN WILL BE ADJUSTED TO INCLUDE MEASURES TO PREVENT THIS TYPE OF SPILL FROM REOCCURRING AND HOW TO CLEAN UP THE SPILL IF THERE IS ANOTHER ONE. A DESCRIPTION OF THE SPILL, WHAT CAUSED IT, AND THE CLEANUP MEASURES WILL ALSO BE INCLUDED.

THE SITE SUPERINTENDENT RESPONSIBLE FOR THE DAY-TO-DAY SITE OPERATIONS, WILL BE THE SPILL PREVENTION AND CLEANUP COORDINATOR. HE/SHE WILL DESIGNATE AT LEAST ONE OTHER SITE PERSONNEL WHO WILL RECEIVE SPILL PREVENTION AND CLEANUP TRAINING. THESE INDIVIDUALS WILL EACH BECOME RESPONSIBLE FOR A PARTICULAR PHASE OF PREVENTION AND CLEANUP. THE NAMES OF RESPONSIBLE SPILL PERSONNEL WILL BE POSTED IN THE MATERIAL STORAGE AREA AND IF APPLICABLE, IN THE OFFICE TRAILER ONSITE.

MAINTENANCE/INSPECTION PROCEDURES

EROSION AND SEDIMENT CONTROL INSPECTION AND MAINTENANCE PRACTICES

THE FOLLOWING ARE INSPECTION AND MAINTENANCE PRACTICES THAT WILL BE USED TO MAINTAIN EROSION AND SEDIMENT CONTROLS.

* NO MORE THAN 10 ACRES OF THE SITE WILL BE DENUDED AT ONE TIME WITHOUT WRITTEN PERMISSION FROM THE ENGINEER.
* ALL CONTROL MEASURES WILL BE INSPECTED BY THE SUPERINTENDENT, THE PERSON RESPONSIBLE FOR THE DAY TO DAY SITE OPERATION OR SOMEONE APPOINTED BY THE SUPERINTENDENT, AT LEAST ONCE A WEEK AND FOLLOWING ANY STORM EVENT OF 0.25 INCHES OR GREATER.
* ALL TURBIDITY CONTROL MEASURES WILL BE MAINTAINED IN GOOD WORKING ORDER; IF A REPAIR IS NECESSARY, IT WILL BE INITIATED WITHIN 24 HOURS OF REPORT.
* BUILT UP SEDIMENT WILL BE REMOVED FROM SILT FENCE WHEN IT HAS REACHED ONE-THIRD THE HEIGHT OF THE FENCE.
* SILT FENCE WILL BE INSPECTED FOR DEPTH OF SEDIMENT, TEARS, TO SEE IF THE FABRIC IS SECURELY ATTACHED TO THE FENCE POSTS, AND TO SEE THAT THE FENCE POSTS ARE FIRMLY IN THE GROUND.
* THE SEDIMENT BASINS WILL BE INSPECTED FOR THE DEPTH OF SEDIMENT, AND BUILT UP SEDIMENT WILL BE REMOVED WHEN IT REACHES 10 PERCENT OF THE DESIGN CAPACITY OR AT THE END OF THE JOB, WHICHEVER COMES FIRST.
* DIVERSION DIKES/SWALES WILL BE INSPECTED AND ANY BREACHES PROMPTLY REPAIRED.
* TEMPORARY AND PERMANENT SEEDING AND PLANTING WILL BE INSPECTED FOR BARE SPOTS, WASHOUTS, AND HEALTHY GROWTH.
* A MAINTENANCE INSPECTION REPORT WILL BE MADE AFTER EACH INSPECTION. A COPY OF THE REPORT FORM TO BE COMPLETED BY THE INSPECTOR IS ATTACHED.
  THE REPORTS WILL BE KEPT ON SITE DURING CONSTRUCTION AND AVAILABLE UPON REQUEST TO THE OWNER, ENGINEER OR ANY FEDERAL, STATE OR LOCAL AGENCY APPROVING SEDIMENT AND AND EROSION PLANS, OR STORM WATER MANAGEMENT PLANS.
  THE REPORTS SHALL BE MADE AND RETAINED AS PART OF THE STORM WATER POLLUTION PREVENTION PLAN FOR AT LEAST THREE YEARS FROM THE DATE THAT THE SITE IS FINALLY STABILIZED AND THE NOTICE OF TERMINATION IS SUBMITTED THE REPORTS SHALL IDENTIFY ANY INCIDENTS OF NON-COMPLIANCE.
* THE SITE SUPERINTENDENT WILL SELECT UP TO THREE INDIVIDUALS WHO WILL BE RESPONSIBLE FOR INSPECTIONS, MAINTENANCE AND REPAIR ACTIVITIES, AND FILLING OUT THE INSPECTION AND MAINTENANCE REPORT.
* PERSONNEL SELECTED FOR INSPECTION AND MAINTENANCE RESPONSIBILITIES WILL RECEIVE TRAINING FROM THE SITE. SUPERINTENDENT. THEY WILL BE TRAINED IN ALL THE INSPECTION AND MAINTENANCE PRACTICES NECESSARY FOR KEEPING THE EROSION AND SEDIMENT CONTROLS USED ONSITE IN GOOD WORKING ORDER.

NON-STORM WATER DISCHARGES

IT IS EXPECTED THAT THE FOLLOWING NON-STORM WATER DISCHARGES WILL OCCUR FROM THE SITE DURING THE CONSTRUCTION PERIOD:

* WATER FROM WATER LINE FLUSHING
* PAVEMENT WASH WATERS (WHERE NO SPILLS OR LEAKS OF TOXIC OR HAZARDOUS MATERIALS HAVE OCCURRED).
* UNCONTAMINATED GROUNDWATER (FROM DEWATERING EXCAVATION).

ALL NON-STORM WATER DISCHARGES WILL BE DIRECTED TO THE SEDIMENT BASIN PRIOR TO DISCHARGE.

CONTRACTOR'S CERTIFICATION

I CERTIFY UNDER PENALTY OF LAW THAT I UNDERSTAND THE TERMS AND CONDITIONS OF THE GENERAL NATIONAL POLLUTANT DISCHARGE ELIMINATION SYSTEM (NPDES) PERMIT THAT AUTHORIZES THE STORM WATER DISCHARGES ASSOCIATED WITH INDUSTRIAL ACTIVITY FROM THE CONSTRUCTION SITE IDENTIFIED AS PART OF THIS CERTIFICATION.

RESPONSIBLE FOR/DUTIES	BUSINESS NAME AND ADDRESS OF CONTRACTOR & ALL SUBS	SIGNATURE
GENERAL CONTRACTOR		
SUB-CONTRACTOR		
SUB-CONTRACTOR		
SUB-CONTRACTOR		
SUB-CONTRACTOR		

TOCOI Engineering, LLC
714 NORTH ORANGE AVENUE, GREEN COVE SPRINGS, FL 32043
PH: 904-215-1388 E.B. NUMBER: 26383

ENGINEER OF RECORD
JOHN J. MAHONEY III
FLORIDA
REGISTRATION NUMBER:
40177

WAREHOUSE BUILDING
FOR
MIKE REEVES

SWPPP CONTRACTOR REQUIREMENTS

REVISIONS

PLOT DATE:
DRAWN BY:
DESIGNED BY:
CHECKED BY:
SCALE:
JOB NO.:

Date: 4/9/25 Time: 4:46 PM DWG Name: \\TE-GCS\01-Projects\23-627 Energy Cove Metal Buildings Mike Reeves\03-CADD\13_23-627 SWPPP CONTRACTOR REQUIREMENTS.dwg Layout: REQ

PROJECT:

STORM WATER POLLUTION PREVENTION PLAN
INSPECTION AND MAINTENANCE REPORT FORM

TO BE COMPLETED EVERY 7 DAYS AND WITHIN 24 HOURS OF
A RAINFALL EVENT OF 0.25 INCHES OR MORE

INSPECTOR:_____ DATE:_____

INSPECTOR'S QUALIFICATIONS:
_____
_____
_____
_____

DAYS SINCE LAST RAINFALL:_____ AMOUNT OF LAST RAINFALL _____ INCHES

STABILIZATION MEASURES

INSPECTION AREA (DESCRIPTION OF LOCATION)	DATE SINCE LAST DISTURBED	DATE OF NEXT DISTURBANCE	STABLIZED ? (YES/NO)	STABILIZED WITH	CONDITION

STABILIZATION REQUIRED:
_____
_____
_____
_____

TO BE PERFORMED BY:_____ ON OR BEFORE:_____

PAGE 1 OF 4

PROJECT:

STORM WATER POLLUTION PREVENTION PLAN
INSPECTION AND MAINTENANCE REPORT FORM

STRUCTURAL CONTROLS

DATE:_____

EARTH DIKES/SWALES

DIKE OR SWALE	FROM	TO	IS DIKE/SWALE STABILIZED ?	IS THERE EVIDENCE OF WASHOUT OR OVERTOPPING

MAINTENANCE REQUIRED FOR EARTH DIKE/SWALE:
_____
_____
_____
_____

TO BE PERFORMED BY:_____ ON OR BEFORE:_____

CATCH BASIN/CURB INLET/OUTFALL TURBIDITY CONTROLS

STRUCTURE/ OUTFALL	ARE TURBIDITY CONTROLS IN PLACE	ANY EVIDENCE OF CLOGING/WASHOUT OR BYPASSING ?	ARE TURBIDITY CONTROLS IN NEED OF REPLACING	DOES SILT NEED TO BE REMOVED FROM AROUND CONTROL

MAINTENANCE REQUIRED FOR CATCH BASIN/CURB INLETS/OUTFALLS TURBIDITY CONTROLS:
_____
_____
_____
_____

TO BE PERFORMED BY:_____ ON OR BEFORE:_____

PAGE 2 OF 4

PROJECT:

STORM WATER POLLUTION PREVENTION PLAN
INSPECTION AND MAINTENANCE REPORT FORM

SEDIMENT BASIN

DEPTH OF SEDIMENT IN BASIN	DEPTH OF SEDIMENT SIDE BASIN	ANY EVIDENCE OF OVERTOPPING OF THE EMBANKMENT ?	CONDITION OF OUTFALL FROM SEDIMENT BASIN

MAINTENANCE REQUIRED FOR SEDIMENT BASIN:
_____
_____
_____
_____

TO BE PERFORMED BY:_____ ON OR BEFORE:_____

OTHER CONTROLS

STABILIZED CONSTRUCTION ENTRANCE

DOES MUCH SEDIMENT GET TRACKED ON TO ROAD ?	IS THE GRAVEL CLEAN OR IS IT FILLED WITH SEDIMENT?	DOES ALL TRAFFIC USE THE STABILIZED ENTRANCE TO LEAVE THE SITE ?	IS THE CULVERT BENEATH THE ENTRANCE WORKING? (IF APPLICABLE)

MAINTENANCE REQUIRED FOR STABILIZED CONSTRUCTION ENTRANCE:
_____
_____
_____

TO BE PERFORMED BY:_____ ON OR BEFORE:_____

PAGE 3 OF 4

PROJECT:

STORM WATER POLLUTION PREVENTION PLAN
INSPECTION AND MAINTENANCE REPORT FORM

CHANGES REQUIRED TO THE POLLUTION PREVENTION PLAN:
_____
_____
_____
_____
_____
_____
_____
_____
_____

REASONS FOR CHANGES:
_____
_____
_____
_____
_____
_____
_____
_____
_____
_____

I CERTIFY UNDER PENALTY OF LAW THAT THIS DOCUMENT AND ALL ATTACHMENTS WERE PREPARED UNDER MY DIRECTION OR SUPERVISION IN ACCORDANCE WITH A SYSTEM DESIGNED TO ASSURE THAT QUALIFIED PERSONNEL PROPERLY GATHERED AND EVALUATED THE INFORMATION SUBMITTED. BASED ON MY INQUIRY OF THE PERSON OR PERSONS WHO MANAGE THE SYSTEM, OR THOSE PERSONS DIRECTLY RESPONSIBLE FOR GATHERING THE INFORMATION, THE INFORMATION SUBMITTED IS, TO THE BEST OF MY KNOWLEDGE AND BELIEF, TRUE, ACCURATE, AND COMPLETE. I AM AWARE THAT THERE ARE SIGNIFICANT PENALTIES FOR SUBMITTING FALSE INFORMATION, INCLUDING THE POSSIBILITY OF FINE AND IMPRISONMENT FOR KNOWING VIOLATIONS.

SIGNATURE:_____

DATE:_____

PAGE 4 OF 4

NOTE TO CONTRACTOR:
THIS IS THE CONTRACTORS CERTIFICATION REQUIRED BY THE EPA'S NATIONAL POLLUTION DISCHARGE ELIMINATION SYSTEM (NPDES), STORM WATER POLLUTION PREVENTION PLAN FOR CONSTRUCTION SITES OVER 5 ACRES. THIS CERTIFICATION MUST BE COMPLETED WEEKLY AND AFTER EVERY RAINFALL EVENT OVER 0.25 INCHES. IT IS SUGGESTED THAT THIS SHEET BE REMOVED FROM THE PLAN SET AND DUPLICATED AS NEEDED BY THE CONTRACTOR.

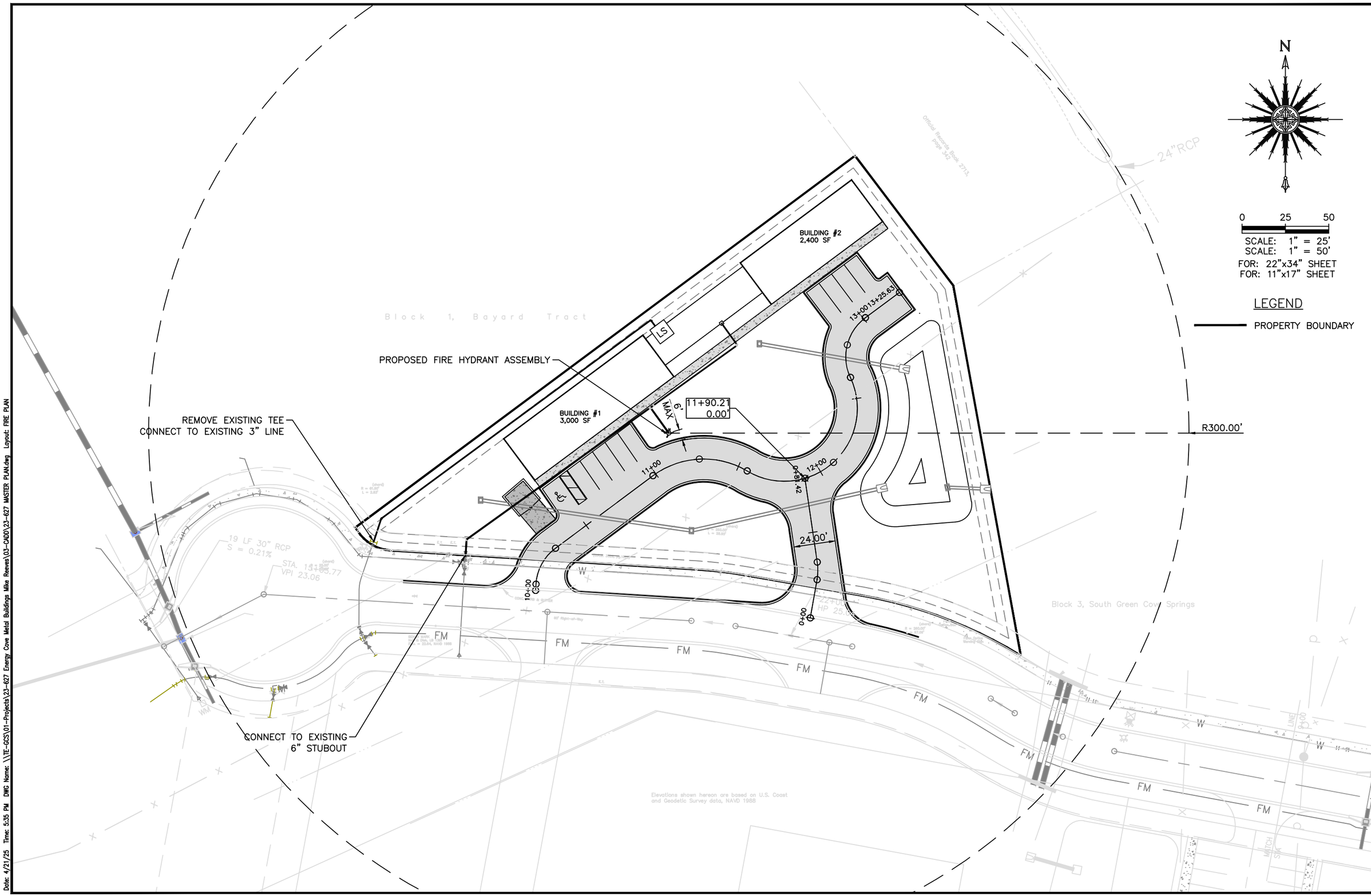

TOCOL Engineering, LLC
714 NORTH ORANGE AVENUE, GREEN COVE SPRINGS, FL 32043
PH: 904-215-1388 E.B. NUMBER: 26383

ENGINEER OF RECORD
JOHN J. MAHONEY III
FLORIDA
REGISTRATION NUMBER:
40177

WAREHOUSE BUILDING
FOR
MIKE REEVES

FIRE SUPPRESSION PLAN

REVISIONS

PLOT DATE:
DRAWN BY:
DESIGNED BY:
CHECKED BY:
SCALE:
JOB NO.:

SHEET NO.
16

Date: 4/21/25 Time: 5:35 PM DWG Name: \\TE-GCS\01-Projects\23-627 Energy Cove Metal Buildings Mike Reeves\03-CADD\23-627 MASTER PLAN.dwg Layout: FIRE PLAN

PLANT LIST					
CODE	QTY	MTETX	BOTANICAL NAME	SIZE	NATIVE
QV	38	SOUTHERN LIVE OAK	QUERCUS VIRGINIANA	FLORIDA #1, 2.5" CAL, 10' HT, BALLED AND BURLAPED, FULL	Y
IV	113	YALPON HOLLY	ILEX VOMITARA	FLORIDA #1, 3 GAL, 24" HT MIN.	Y

NOTE:
THE TYPE OF SOD SHALL BE BAHIA SOD.
SOD SHALL BE CLEAN AND REASONABLY FREE OF WEEDS AND NOXIOUS PESTS OR DISEASE.

TREE MITIGATION TABLE	
DESCRIPTION	STATUS
12" CAMPHOR	REMOVE
9" WATER OAK	REMOVE
12" WATER OAK	REMOVE
15" PALM	REMOVE
18" LIVE OAK	REMOVE
36" LIVE OAK	REMOVE
30" WATER OAK	REMOVE
13" LIVE OAK	REMOVE
18" WATER OAK	REMOVE
15" PINE	REMOVE
6" WATER OAK	REMOVE
42" LIVE OAK	REMOVE
24" WATER OAK	REMOVE
24" WATER OAK	REMOVE
30" WATER OAK	REMOVE
18" WATER OAK	REMOVE
12" CAMPHOR	REMOVE
10" CAMPHOR	REMOVE
12" PINE	REMOVE
12" PINE	REMOVE
6" CAMPHOR	REMOVE
24" LIVE OAK	REMAIN
30" LIVE OAK	REMAIN
8" LIVE OAK	REMAIN
18" LIVE OAK	REMAIN
12" LIVE OAK	REMAIN
15" LIVE OAK	REMAIN
20" LIVE OAK	REMAIN
18" LIVE OAK	REMAIN
15" LIVE OAK	REMAIN
24" LIVE OAK	REMAIN
24" LIVE OAK	REMAIN
18" LIVE OAK	REMAIN
15" LIVE OAK	REMAIN
24" LIVE OAK	REMAIN

LIVES OAK REMOVED	109
LIVE OAKS MITIGATION @ 1" TO 1" =	109"
OTHER TREES GREATER THAN 12" DBH REMOVED =	265"
OTHER TREES MITIGATION @ 1" TO 3" =	89"
LIVE OAKS TREE CREDITS	
LIVE OAKS 12" TO 18" PRESERVED (111 x 1) =	111" CREDIT
LIVE OAKS 19" TO 30" PRESERVED (146 x 1.25) =	183" CREDIT
LIVE OAK TREE CREDITS TOTAL =	294"

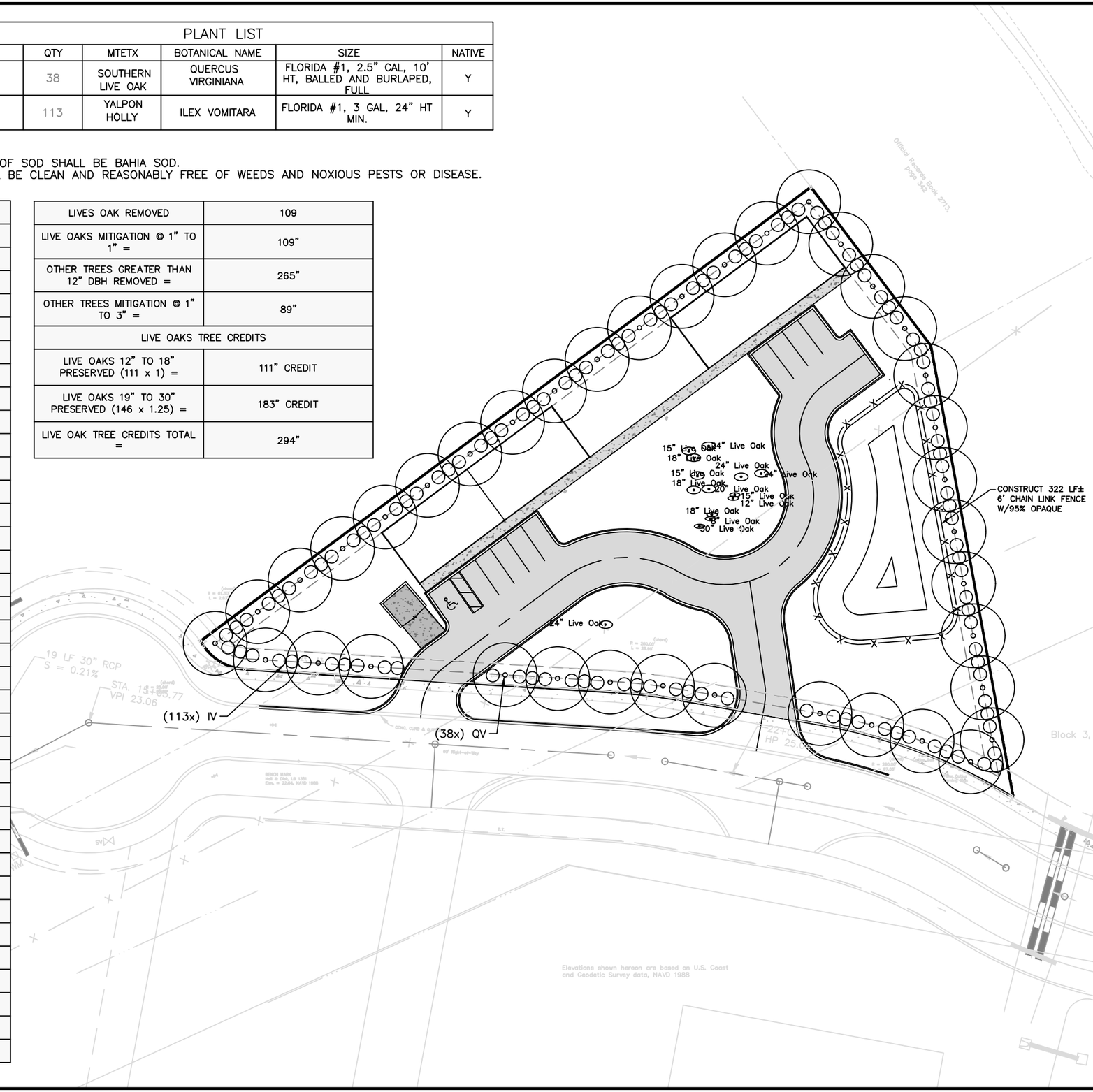

N

0 25 50
SCALE: 1" = 25'
SCALE: 1" = 50'
FOR: 22"x34" SHEET
FOR: 11"x17" SHEET

LEGEND

PROPERTY BOUNDARY

TREES TO REMAIN

TOCOL Engineering, LLC
714 NORTH ORANGE AVENUE, GREEN COVE SPRINGS, FL 32043
PH: 904-215-1388 E.B. NUMBER: 26383

ENGINEER OF RECORD
JOHN J. MAHONEY III
FLORIDA
REGISTRATION NUMBER: 40177

WAREHOUSE BUILDING
FOR
MIKE REEVES
LANDSCAPE PLAN

REVISIONS

PLOT DATE:
DRAWN BY:
DESIGNED BY:
CHECKED BY:
SCALE:
JOB NO.:

SHEET NO.
LS-1

Date: 5/15/25 Time: 4:00 PM DWG Name: \\TE-GCS\01-Projects\23-627 Energy Cove Metal Buildings Mike Reeves\03-CADD\23-627 MASTER PLAN.dwg Layout: LS-1

GREEN COVE SPRINGS LANDSCAPE NOTES

1. THESE PLANS ARE FOR LANDSCAPE PERMITTING PURPOSES ONLY. CONTRACTOR IS RESPONSIBLE FOR FOLLOWING ALL APPROPRIATE RULES AND REGULATIONS.
2. TREE PROTECTION BARRIERS ARE TO REMAIN IN PLACE UNTIL ALL SITE DEVELOPMENT IS COMPLETED.
3. EXISTING TREES SHOWN ON THIS PLAN ARE THOSE LOCATED BY SURVEYOR. ENGINEER TAKES NO RESPONSIBILITY FOR THEIR LOCATION AND SIZE.
4. ENGINEER CAN NOT GUARANTEE EXISTING TREE SURVIVAL FROM CONSTRUCTION IMPACT.
5. PLANT SIZE TAKES PRECEDENCE OVER CONTAINER SIZE.
6. PLANT QUANTITIES AND SQUARE FOOTAGE TABULATIONS ARE FOR THE CONTRACTORS CONVENIENCE ONLY. THE CONTRACTOR IS TO VERIFY ALL PLANT QUANTITIES AND SQUARE FOOTAGES.
7. ALL TREES LOCATED IN LAWN AREAS ARE TO HAVE A 2' RADIUS MULCHED CIRCLE AROUND BASE OF TREE.
8. ALL TREES TO BE FLORIDA GRADE #1
9. ALL PLANTING AREAS AND MULCHED RADII AROUND TREES ARE TO BE A MIN. 2" OF ORGANIC MULCH.
10. ALL SHADE TREES TO BE 15 FT MIN. FROM ALL OVER HEAD POWER LINES.
11. ALL SHADE TREES TO BE 5 FT MIN. AND UNDERSTORY TREES ARE TO BE A 2 1/2' FT MIN. FROM ALL SIDEWALKS, CURBS AND HARDSURFACES.
12. CONTRACTOR RESPONSIBLE TO PROVIDE ON SITE, TOTAL CALIPER INCHES SHOWN ON PLANTING SCHEDULE.
13. FINAL ACCEPTANCE OF LANDSCAPE IS NOT TO BE ASSUMED UNTIL:
    13.1. CITY FINAL LANDSCAPE INSPECTION IS COMPLETE AND APPROVED,
    13.2. A FORMAL LETTER FROM GENERAL CONTRACTOR TO ENGINEER STATING FINAL APPROVAL.
14. CONTRACTOR RESPONSIBLE FOR LANDSCAPE MAINTENANCE UNTIL FINAL APPROVAL LETTER RELEASES LANDSCAPE TO OWNER.
15. ALL DISTURBED AREAS ON THE SITE AND THE RIGHT-OF-WAY SHALL BE SODDED WITH TURF GRASS.
16. CONTRACTOR IS RESPONSIBLE FOR ACQUIRING ALL REQUIRED PERMITS AND ASSOCIATED FEES TO COMPLETE THE WORK.
17. CONTRACTOR SHALL LOCATE AND VISIBLY MARK ALL BURIED UTILITIES PRIOR TO CONSTRUCTION AND NOTIFY THE ENGINEER OF ANY CONFLICTS.
18. SUBSTITUTIONS SHALL BE REJECTED UNLESS APPROVED BY THE ENGINEER PRIOR TO INSTALLATION.

WATERING SCHEDULE

ALL REQUIRED LANDSCAPING SHOWN ON THESE PLANS WILL BE WATERED MANUALLY USING HOSE BIBS DISPERSED THROUGHOUT THE DEVELOPMENT SO THAT EVERY REQUIRED LANDSCAPE AREA IS WITHIN 75' OF A HOSE BIB. TREES SHALL BE WATERED AS NEEDED TO PREVENT DECLINE, AND AT MINIMUM, THREE TIMES WEEKLY DURING NO-RAIN PERIODS FOR THE FIRST 60 DAYS. WATER THEREAFTER ACCORDING TO THE FOLLOWING 180-DAY SCHEDULE:

LARGE TREES/PALMS:	30GAL/APPLICATION
SMALL TREES:	20GAL/APPLICATION
SHRUBS AND SOD:	AS NEEDED TO PREVENT WILTING
1ST 8 WEEKS:	3 WATERINGS PER WEEK (24 TOTAL)
2ND 8 WEEKS:	2 WATERINGS PER WEEK (16 TOTAL)
FINAL 10 WEEKS:	1 WATERING PER WEEK (10 TOTAL)

ALL WATERING MUST COMPLY WITH ST. JOHN'S RIVER WATER MANAGEMENT DISTRICT LAWN AND IRRIGATION RULES AND REGULATIONS.

IRRIGATION

1. HOSE BIBS ARE TO BE PROVIDED EVERY 75' WITHIN ALL LANDSCAPED AREAS WITHIN THE PROJECT AREA.
2. UPON COMPLETION, CONTRACTOR SHALL SUBMIT AN AS-BUILT PLAN OF THE INSTALLED IRRIGATION SYSTEM, LOCATION OF ALL COMPONENTS AND SLEEVES TO THE OWNER (AND MUNICIPAL AUTHORITY IF REQUIRED).
3. ALL PIPE AND WIRE UNDER PAVING SHALL BE PLACED IN SCHEDULE 40 PVC SLEEVES FOR THE FULL PAVEMENT COVERAGE LENGTH AND SHALL BE AT LEAST 24" BELOW FINISHED GRADE.
4. CONTRACTOR SHALL BE RESPONSIBLE FOR ALL APPLICABLE PERMITS AND FEES.

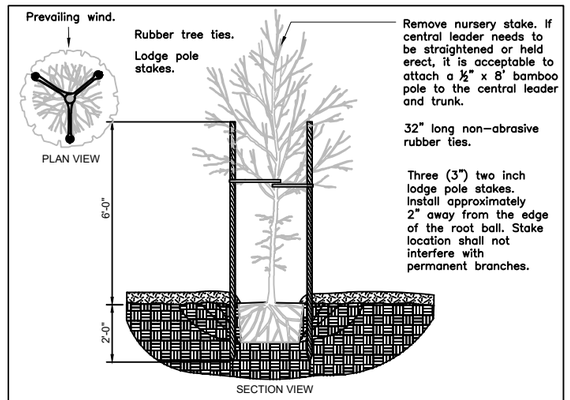

TREE STAKING – LODGE POLES (3)

N.T.S.

TEMPORARY TREE PROTECTION BARRIER SHALL BE LOCATED AS INDICATED ON PLAN BUT SHALL ALWAYS BE AT 1'-0" OF RADIUS FOR EVERY 1" OF D.B.H. IF NO CONSTRUCTION ACTIVITIES ARE TO TAKE PLACE WITHIN THE DRIP LINE. IN NO CASE SHALL THE PROTECTED AREA BE LESS THEN ONE-HALF THE AVERAGE RADIUS OF THE DRIP LINE OR LESS THAN 10 FEET.

THE BARRIER SHALL BE CONSTRUCTED OF: 4'-0" SAFETY DRAINAGE COPOLYMER BARRIER FENCING RETAINED TAUGHT BY WIRE TIES TO POSTS. POSTS SHALL BE #3 REBAR 6'-0" LONG DRIVEN 2'-0" INTO GROUND NO MORE THEN 6'-0" APART. REBAR POST SHALL HAVE A SAFETY CAP ON EACH POST'S EXPOSED END.

NOTES:
-NO MATERIALS OR EQUIPMENT SHALL BE STORED, OPERATED, DUMPED, OR BURNED WITHIN THE PROTECTED AREA.
-NO ATTACHMENT (WIRES, SIGNS, ETC.), SHALL BE ATTACHED TO A PROTECTED TREE.
-PRIOR TO ANY LAND CLEARING OPERATIONS, TREE LIMBS WHICH INTERFERE WITH CONSTRUCTION SHALL BE REMOVED IN ACCORDANCE WITH NAT. ARBORIST ASSOC. PRUNING STANDARDS.

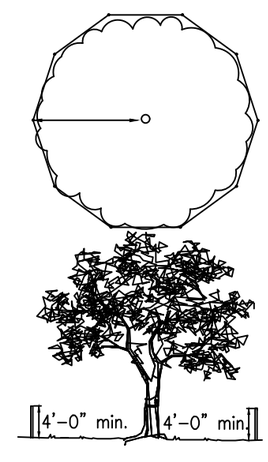

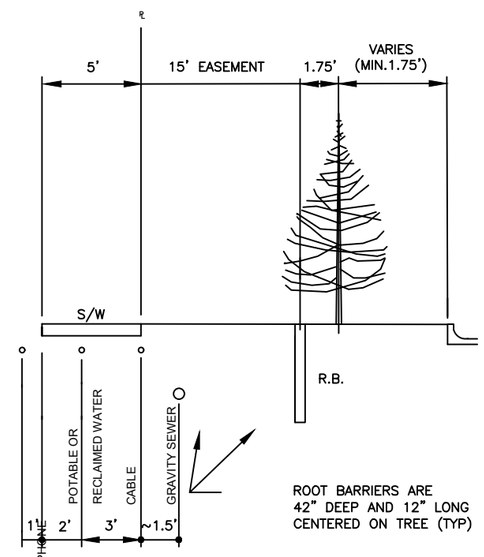

ROOT BARRIERS ARE 42" DEEP AND 12" LONG CENTERED ON TREE (TYP)

EXTRUDED SHEETS OR PANELS WITH INTEGRAL MALE/FEMALE SLIDING LOCK CONNECTION ENDS. MATERIAL SHALL BE HDPE WITH A MINIMUM THICKNESS OF 60 MIL, AND SHALL BE RIBBED. ROOT BARRIER SHALL EXTEND TO A MINIMUM DEPTH OF 42" BELOW FINISH GRADE. THE ROOT BARRIER SHALL BE A MINIMUM OF 12' LONG, CENTERED ON THE TREE AND PARALLEL WITH THE UTILITY MAIN OR SERVICE LINE BEING PROTECTED, UNLESS SHOWN OTHERWISE ON THE PLANS. ROOT BARRIER SHALL BE INSTALLED AT ANY TREE PLANTED IN A CCUA UTILITY EASEMENT, OR ANY TREE PLANTED WITHIN 10' OF ALL CCUA UTILITY MAINS OR SERVICES. NO TREES SHALL BE PLANTED IN A CCUA UTILITY EASEMENT EASEMENT WITHOUT THE APPROVAL OF CCUA. NO TREES SHALL BE CLOSER THAN 5' TO ANY CCUA UTILITY LINE OR SERVICES.

SCALE: N.T.S.

TOCOL Engineering, LLC
714 NORTH ORANGE AVENUE, GREEN COVE SPRINGS, FL 32043
PH: 904-215-1388 E.B. NUMBER: 26383

ENGINEER OF RECORD
JOHN J. MAHONEY III
FLORIDA
REGISTRATION NUMBER: 40177

WAREHOUSE BUILDING
FOR
MIKE REEVES
LANDSCAPE PLAN

REVISIONS

PLOT DATE:
DRAWN BY:
DESIGNED BY:
CHECKED BY:
SCALE:
JOB NO.:

SHEET NO.
LS-2

Date: 10/31/24 Time: 1:34 PM DWG Name: \\TE-SJC\01-Projects\23-627 Energy Cove Metal Buildings Mike Reeves\03-CADD\23-627 MASTER PLAN.dwg Layout: LANDSCAPE PLAN (2)