SHEETZ STORE REBUILD - #62

LOCATION MAP:

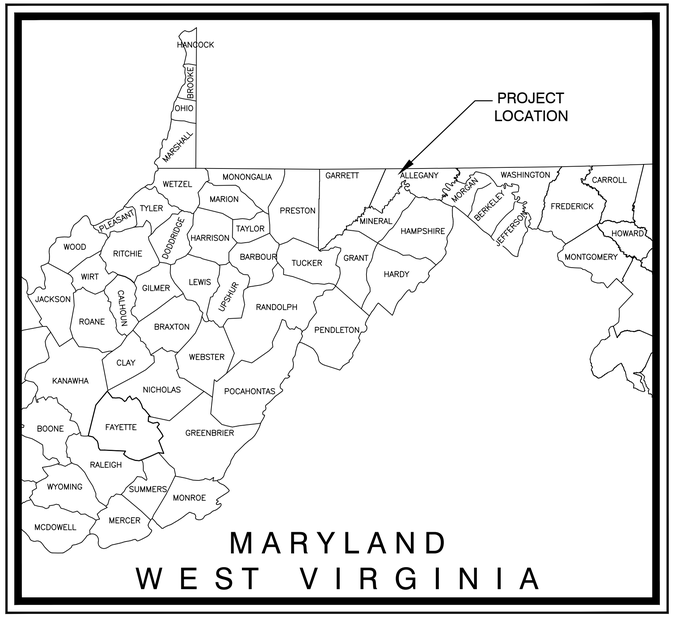

PROJECT INFORMATION:

1. SURFACE AND TOPOGRAPHIC FEATURES SHOWN HEREON ARE FROM AN ACTUAL FIELD SURVEY OF THE PREMISES, WHICH WAS COMPLETED ON SEPTEMBER 11, 2024.
2. THE DEPICTION HEREON OF SUBSURFACE UTILITIES IS BASED UPON SURVEYED LOCATIONS OF OBSERVED SURFACE EVIDENCE AND SURVEYED LOCATIONS OF FIELD MARKINGS BY ENTITIES WHICH RESPONDED TO A MARYLAND 811 LOCATE REQUEST (TICKET #24632005, DATED 09/09/2024). NO SUBSURFACE INVESTIGATION WAS CONDUCTED DURING THE SURVEY, AND THE SURVEYOR DOES NOT GUARANTEE THE ACCURATE DEPICTION OF ANY OF THE UNDERGROUND UTILITIES INDICATED HEREON.
3. NO CLAIM IS MADE OR IMPLIED BY THIS DRAWING OR ITS PREPARERS REGARDING COMPREHENSIVE REPRESENTATION OF UNDERGROUND UTILITIES; THOSE UNDERGROUND LOCATIONS THAT ARE INDICATED HEREON SHOULD BE CONSIDERED TO BE APPROXIMATE ONLY. NO SUBSURFACE INVESTIGATION WAS PERFORMED IN RELATION TO THE LOCATION OF ANY OF THE DEPICTED UTILITIES.
4. IT IS A PROSPECTIVE EXCAVATOR'S RESPONSIBILITY TO ASCERTAIN THE STATUS AND LOCATION OF EACH UTILITY BEFORE PERFORMING ANY WORK WHICH MAY AFFECT SUCH FACILITIES, INCLUDING PROBING, EXCAVATION, OR ANY OTHER ACTIVITY THAT HAS THE POTENTIAL TO DAMAGE EXISTING UTILITIES. CALL 811 OR 1-800-257-7777 AT LEAST TWO BUSINESS DAYS PRIOR TO ANY PROPOSED EXCAVATION.
5. GIVEN ELEVATIONS ARE REFERENCED TO THE NORTH AMERICAN VERTICAL DATUM OF 1988 (NAVD88) AND BEARINGS ARE REFERENCED TO THE MARYLAND COORDINATE SYSTEM (NAD83[2011]), AS DERIVED FROM GLOBAL NAVIGATION SATELLITE SYSTEM POINT SOLUTIONS.
6. THE LEASED PROPERTY LIMITS SHOWN HEREON ARE BASED UPON A LEASE AGREEMENT BETWEEN NEIL A. ABRAHAMSON AND SHEETZ, INC., DATED JUNE 5, 2008. THE LEASED PROPERTY IS A PORTION OF THE PARCEL NOW OR FORMERLY OWNED BY FROSTBURG SHOPPING VILLAGE, LLC (LIBER 2217, PAGE 034).
7. PARCEL DATA IS REFERENCED TO ONLINE SDAT INFORMATION PROVIDED BY THE MARYLAND DEPARTMENT OF ASSESSMENTS AND TAXATION.
8. THE REFERENCE MONUMENTS SHOWN HEREON ARE AS FOUND DURING THE FIELD SURVEY, WHICH WAS COMPLETED IN SEPTEMBER OF 2024.
9. THE SURVEYED PARCEL IS IN AN AREA OF MINIMAL FLOOD HAZARD, PER FEMA NO. 24001C0018E DATED APRIL 3, 2020, BY GRAPHICAL PLOTTING ONLY.
10. PROPERTIES SHOWN HEREON ARE ZONED "C-2 HIGHWAY COMMERCIAL", THEREFORE, ARE SUBJECT TO ZONING AND LAND DEVELOPMENT REGULATIONS AND REVIEW BY THE CITY OF FROSTBURG.
11. THE PROJECT CONSTRUCTION LIMITS CONTAIN ± 59,822.17 SQUARE FEET OR ±1.37 ACRES OF LAND.
12. PROPOSED USE: GASOLINE SERVICE STATION WITH CONVENIENCE STORE

PARKING TABULATION CHART

USE	REQUIREMENT	# SEATS	#EMPLOYEES	FLOOR AREA (SF)	REQUIRED SPACES	ACCESSIBLE SPACES	TOTAL PROVIDED
AUTOMOBILE SERVICE STATION	1 SPACES PER 300 SF	N/A	N/A	6,132	20	2	44

SHEET INDEX:

SHEET DESCRIPTION	SHEET NUMBER
COVER SHEET	C-01
LEGEND AND NOTES	C-02
EXISTING CONDITIONS PLAN	C-03
DEMOLITION PLAN	C-04
LAYOUT PLAN	C-05
GRADING AND UTILITY PLAN	C-06
LANDSCAPE PLAN	C-07
LANDSCAPE NOTES AND DETAILS	C-08
CONSTRUCTION DETAILS	C-09
CONSTRUCTION DETAILS (SHEETZ STANDARD DETAILS)	C-10
CONSTRUCTION DETAILS (SHEETZ STANDARD DETAILS)	C-11
CONSTRUCTION DETAILS (SHEETZ STANDARD DETAILS)	C-12
CONSTRUCTION DETAILS (SHEETZ STANDARD DETAILS)	C-13
EROSION AND SEDIMENT PLAN PHASE I	ENS-1
EROSION AND SEDIMENT PLAN PHASE II	ENS-2
EROSION AND SEDIMENT CONTROL NARRATIVE	ENS-3
EROSION AND SEDIMENT CONTROL DETAILS	ENS-4
PRE-CONSTRUCTION DRAINAGE AREA MAP	DA-1
POST CONSTRUCTION DRAINAGE AREA MAP	DA-2
STORMWATER MANAGEMENT DRAINAGE AREA MAP	SWM-1
STORMWATER MANAGEMENT PLAN AND DETAILS	SWM-2
STORMWATER MANAGEMENT DETAILS	SWM-3

VICINITY MAP:

SCALE: 1" = 500'

PROJECT CONTACTS:

OWNER:
ADDRESS- SHEETZ INC.
5700 6th AVENUE
ALTOONA, PA. 16602
PHONE NUMBER- 814.239.6018
E-MAIL- BFRANKS@SHEETZ.COM
CONTACT- ROBERT FRANKS P.M.

ENGINEER: TRIAD ENGINEERING, INC.
ADDRESS- 1097 CHAPLIN ROAD
MORGANTOWN, WV 26501
PHONE NUMBER- 304.296.2562
E-MAIL- rburns@triadeng.com
CONTACT- RAY BURNS

ARCHITECT: CONVENIENCE ARCHITECTURE AND DESIGN P.C.
ADDRESS- 351 SHEETZ WAY, CLAYSBURG, PA. 16625
PHONE NUMBER- 814.239.6013
E-MAIL- tcolumbu@sheetz.com
CONTACT- THOMAS M. COLUMBUS

ELECTRIC COMPANY: FIRST ENERGY
ADDRESS- 701 E. 4TH ST
CUMBERLAND, MD.
PHONE NUMBER- 888.544.4877
CONTACT-
E-MAIL-

WATER PROVIDER: FROSTBURG WATER DEPARTMENT
ADDRESS- 19140 NATIONAL HWY
FROSTBURG, MD
PHONE NUMBER- 301.689.5855
CONTACT-

SEWER PROVIDER: FROSTBURG MUNICIPAL CNTR
ADDRESS- 37 S BROADWAY
FROSTBURG, MD
PHONE NUMBER- 301.689.6000
CONTACT-

PHONE COMPANY: VERIZON
ADDRESS- 85 E. MAIN ST
FROSTBURG, MD.
PHONE NUMBER-
EMAIL-
CONTACT-

GAS COMPANY: COLUMBIA GAS OF MARYLAND
ADDRESS- 1000 W. INDUSTRIAL BLVD.
CUMBERLAND, MD.
PHONE NUMBER- 888.460.4332
EMAIL-
CONTACT-

PROJECT NOTES:

1. UNLESS OTHERWISE NOTED OR SHOWN HEREON, ALL MATERIALS AND METHODS OF CONSTRUCTION SHALL BE SUPPLIED AND INSTALLED IN STRICT CONFORMANCE WITH THE RULES, SPECIFICATIONS, AND/OR REGULATIONS PROMULGATED BY OR CONTAINED IN:
   - A. MARYLAND DEPARTMENT OF TRANSPORTATION, STANDARD DETAILS BOOK, AND CONSTRUCTION MANUAL AS AMENDED TO DATE.
   - B. MARYLAND DEPARTMENT OF ENVIRONMENT AND SEDIMENT CONTROL MANUAL AS AMENDED TO DATE.
   - C. THE DEPARTMENT OF JUSTICE FEDERAL REGISTER IMPLEMENTING TITLE III OF THE AMERICANS WITH DISABILITIES ACT, PUBLIC LAW 101-336 FOR NON-DISCRIMINATION ON THE BASIS OF DISABILITY BY PUBLIC ACCOMMODATIONS.
   - D. MARYLAND DEPARTMENT OF THE ENVIRONMENT, BEST MANAGEMENT PRACTICES MANUAL
   - E. CITY OF FROSTBURG STORM, SANITARY SEWER AND WATER STANDARDS.
2. THE CONTRACTOR SHALL CONFORM TO ALL APPLICABLE OSHA SAFETY REGULATIONS.
3. THE CONTRACTOR SHALL HAVE APPROVED AND CURRENT DRAWINGS IN HIS POSSESSION PRIOR TO CONSTRUCTION AND SHALL MAINTAIN AT LEAST ONE COPY OF SAID CURRENT APPROVED PLANS AT THE CONSTRUCTION SITE AT ALL TIMES.
4. ALL RIGHT-OF-WAY MONUMENTS WHICH ARE DISTURBED BY CONSTRUCTION ARE TO BE REPLACED BY A CERTIFIED LAND SURVEYOR, AT THE DEVELOPER'S EXPENSE.
5. REFER TO THE MARYLAND DEPARTMENT OF TRANSPORTATION STANDARD DETAILS BOOK (CURRENT EDITION) FOR CONSTRUCTION DETAILS NOT INCLUDED HEREIN.

TRIAD ENGINEERING, INC.
1097 CHAPLIN ROAD
MORGANTOWN, WV 26501
PH: 304.296.2562 FAX: 304.296.8739
OFFICE LOCATIONS
MARYLAND - PENNSYLVANIA - VIRGINIA
WEST VIRGINIA - OHIO

REV. #	DATE	DESCRIPTION	BY

CADD FILE: C-01 Cover Sheet.DWG
DRAWN BY: RDB
CHECKED BY: WME
DATE: 06-19-2026
SCALE: AS SHOWN

7/14/2026

SHEETZ STORE REBUILD - #62
FROSTBURG, MARYLAND

COVER SHEET

TRIAD ENGINEERING, INC.
www.triadeng.com

SHEET NUMBER:
C-01
JOB NO.: 01-24-0390

EXISTING	PROPOSED	
		SANITARY SEWER MANHOLE
		SANITARY SEWER CLEANOUT
		SEPTIC TANK
		FORCE MAIN AIR RELEASE VALVE
		FORCE MAIN BLOWOFF
		WATER MANHOLE
		FIRE HYDRANT
		WATER VALVE
		WATERLINE REDUCER
		WATER METER
		WATERLINE PLUG
		WATER WELL
		WATERLINE AIR RELEASE VALVE
		WATERLINE BLOWOFF
		FIRE CONNECTION (SIAMESE/STORZ)
		SPIGOT / HOSE BIB
		IRRIGATION / SPRINKLER CONTROL
		IRRIGATION / SPRINKLER HEAD
		WATER LINE MARKER
		DRINKING FOUNTAIN
		STORM DRAIN MANHOLE
		STORM OR ROOF DRAIN CLEANOUT
		ROOF DOWN SPOUT
		CATCH BASIN
		GAS MANHOLE
		GAS VALVE
		GAS METER
		GAS WELL
		ABANDONED GAS WELL
		GAS LINE MARKER
		GAS REGULATOR
		GAS VENT
		ELECTRIC MANHOLE
		ELECTRIC BOX (HANDHOLE, PULL BOX)
		ELECTRIC METER
		ELECTRIC LINE MARKER
		ELECTRIC TRANSFORMER
		UTILITY POLE
		GUY (ANCHOR) POLE
		GUY (ANCHOR) WIRE
		TELEPHONE MANHOLE
		TELEPHONE PEDESTAL
		TELEPHONE (COMMUNICATION) LINE MARKER
		CABLE TELEVISION PEDESTAL
		CABLE TELEVISION LINE MARKER
		FIBER OPTIC MANHOLE
		FIBER OPTIC BOX (HANDHOLE, PULL BOX)
		FIBER OPTIC LINE MARKER
		BARBECUE GRILL
		SATELLITE DISH
		MAILBOX
		HEAT PUMP, AC COMPRESSOR
		BOLLARD
		PARKING METER
		SIGN - DOUBLE POST
		HANDICAPPED PARKING
		FLAG POLE
+ELEV	+ELEV	SPOT ELEVATION
WSE =	WSE =	WATER SURFACE ELEVATION
		SEEP OR SPRING W/FLOW DIRECTION
		TOE OF SLOPE
		MINE ENTRANCE
		PERCOLATION TEST
		FUEL PUMP
		RAILROAD SIGNAL
		RAILROAD CONTROL BOX
		RAILROAD SWITCH
		TRAFFIC SIGNAL
		TRAFFIC SIGNAL CONTROL BOX
		FLOW DIRECTION
		SPOT OR FLOOD LIGHT
		LIGHT POST
		SINGLE FIXTURE OVERHEAD LIGHT POLE
		DOUBLE FIXTURE OVERHEAD LIGHT POLE
		DECIDUOUS TREE
		CONIFEROUS TREE
		DECIDUOUS SHRUB
		CONIFEROUS SHRUB
		TREE STUMP

EXISTING	PROPOSED	
		SOIL BORING
		TEST PIT / TEST BORING
		TRAVERSE CONTROL POINT
		GPS CONTROL POINT
BM	BM	BENCHMARK
		AERIAL TARGET
		IRON PIPE SET (BOUNDARY MONUMENT SET)
		OPEN IRON PIPE FOUND
		SOLID IRON BAR or REBAR SET or CALCULATED POINT
		SOLID IRON BAR or REBAR FOUND
		CONCRETE MONUMENT (BOUNDARY MONUMENT FOUND)
		MAG NAIL and PK NAIL
RW	RW	RIGHT OF WAY MARKER
		BUILDING ENTRANCE MARKER
	8	ON-SITE PARKING COUNT

EXISTING	PROPOSED	
		BOUNDARY LINE, PROPERTY LINE OR RIGHT-OF-WAY LINE
		EASEMENT LINE
		SETBACK LINE
		CENTERLINE
990	990	MAJOR CONTOUR
989	989	MINOR CONTOUR
		ROAD
	LOC	LIMITS OF CONSTRUCTION
G	G	GAS LINE
		SANITARY SEWER PIPE AND MANHOLE
W	W	WATER LINE
		STORM DRAIN PIPE AND INLET
OHE	OHE	OVERHEAD ELECTRIC LINE
UGE	UGE	UNDERGROUND ELECTRIC LINE
OHW	OHW	OVERHEAD WIRE
OHT	OHT	OVERHEAD TELEPHONE LINE
OHC	OHC	OVERHEAD CABLE LINE
FO	FO	FIBER OPTIC LINE
STM	STM	STEAM LINE
		GUARD RAIL
		DITCH CENTERLINE
X X	X X	FENCE
		TREE LINE
		CONCRETE HATCH
		RIP RAP HATCH
		2" ASPHALT OVERLAY AREA
		ASPHALT FULL DEPTH AREA

CONSTRUCTION NOTES

1. EROSION AND SEDIMENT CONTROL MEASURES SHALL BE IN PLACE PRIOR TO PERFORMING ANY SIGNIFICANT EARTH DISTURBING ACTIVITIES. CONTRACTOR SHALL OBTAIN ALL SIGNIFICANT PERMITS FROM APPROPRIATE OFFICES. A PRECONSTRUCTION CONFERENCE SHALL BE HELD PRIOR TO THE ISSUANCE OF THE LAND DISTURBING PERMIT. THE CONTRACTOR SHALL ARRANGE THE MEETING WITH THE COUNTY E & SC ADMINISTRATOR/INSPECTOR.

2. ALL MATERIALS USED FOR FILL OR BACKFILL SHALL NOT CONTAIN ANY DEBRIS, WASTE, OR FROZEN MATERIALS, AND SHALL CONTAIN LESS THAN (2) PERCENT VEGETATION-ORGANIC MATERIALS BY WEIGHT. ANY ISOLATED LIMBS, ROOTS, OR OTHER SIMILAR ORGANICS WHICH ARE GREATER THAN APPROXIMATELY 2 INCHES IN DIAMETER SHALL BE REMOVED FROM THE FILL AREAS. ALL FILL MATERIAL SHALL BE FREE OF ROCK OR GRAVEL LARGER THAN SIX (6) INCHES IN ANY DIMENSION. ALL PROPOSED FILL MATERIALS SHALL BE APPROVED BY A GEOTECHNICAL ENGINEER PRIOR TO PLACEMENT AS CONTROLLED FILL. REPRESENTATIVE SAMPLES OF PROPOSED FILL MATERIAL SHALL BE SUBMITTED BY THE CONTRACTOR ONE WEEK PRIOR TO PLACEMENT OF THE MATERIAL TO ALLOW TIME FOR COMPLETION OF THE NECESSARY LABORATORY TESTS.

3. SATISFACTORY MATERIAL FOR USE AS FILL FOR PUBLIC STREETS INCLUDE MATERIALS CLASSIFIED IN ASTM D-2487 AS GW, GP, GM, GC, SW, SP, SM, SC, ML-CL AND CL GROUPS. THE MOISTURE CONTENT SHALL BE CONTROLLED WITHIN PLUS OR MINUS 3 PERCENTAGE POINTS OF OPTIMUM TO FACILITATE COMPACTION. GENERALLY, UNSATISFACTORY MATERIALS INCLUDE MATERIALS CLASSIFIED IN ASTM D-2487 AS PT, CH, MH, OL, OH, AND ANY SOIL TOO WET TO FACILITATE COMPACTION, CH AND MH SOILS MAY BE USED SUBJECT TO RESULTS OF LABORATORY TESTS.

4. AFTER COMPLETION OF PROOF-ROLLING, TESTING AND/OR BEARING EVALUATION AND PROVIDED THAT A FIRM, STABLE SUBGRADE IS PRESENT, FILL SHOULD BE PLACED AND COMPACTED IN ACCORDANCE WITH THE FOLLOWING CRITERIA:
   a. FREE WATER SHALL BE PREVENTED FROM APPEARING ON THE SURFACE DURING OR SUBSEQUENT TO COMPACTION OPERATIONS.
   b. ALL FILL MATERIAL COMPACTED BY HAND-OPERATED TAMPERS OR LIGHT COMPACTION EQUIPMENT SHALL BE PLACED IN MAXIMUM 6-INCH LOOSE LIFTS. FILL MATERIAL COMPACTED BY HEAVY COMPACTION EQUIPMENT SHALL BE PLACE IN MAXIMUM 9-INCH LOOSE LIFTS. VIBRATORY COMPACTION EQUIPMENT SHALL BE USED FOR GRANULAR MATERIAL, AND SLOTTED STEEL-WHEEL OR SHEEPSFOOT ROLLERS SHALL BE USED FOR COHESIVE, FINE-GRAINED SOILS.
   c. EACH FILL LAYER SHALL BE MOISTENED OR AERATED AS NECESSARY TO OBTAIN THE REQUIRED COMPACTION, SOIL MATERIAL WHICH IS REMOVED BECAUSE IT IS TOO WET TO PERMIT PROPER COMPACTION CAN BE STOCKPILED, OR SPREAD AND ALLOWED TO DRY. WHEN THE SOIL IS TOO DRY, WATER SHOULD BE APPLIED UNIFORMLY TO THE SUBGRADE SURFACE OR TO THE LAYER TO BE COMPACTED.
   d. ALL NEW FILL PLACED WITHIN STRUCTURE OR ROADWAY AREAS FOR THE PROJECT SHALL BE COMPACTED TO AT LEAST 98 PERCENT OF THE LABORATORY MAXIMUM DRY DENSITY AS DETERMINED BY THE STANDARD PROCTOR METHOD (ASTM D-698). NEW FILL PLACED WITHIN LANDSCAPE AREAS SHALL BE COMPACTED TO AT LEAST 95 PERCENT OF THE MAXIMUM DRY DENSITY. THE MOISTURE CONTENT OF THE SOIL SHALL BE AT OR WITHIN THREE (3) PERCENTAGE POINTS OF THE OPTIMUM MOISTURE CONTENT.

5. FIELD DENSITY TESTS ON THE BUILDING SITE SHALL BE PERFORMED IN ACCORDANCE WITH ASTM D-2922 (NUCLEAR METHOD). A MINIMUM OF THREE (3) FIELD DENSITY TESTS SHALL BE CONDUCTED FOR EACH LIFT OF FILL PLACED OR A MINIMUM OF EVERY 2,500 SQUARE FEET OF FILL PLACED, WHICHEVER IS GREATER, TO VERIFY THE COMPACTION.

6. ROADWORK AND MATERIALS TESTING FOR CONSTRUCTION WITHIN EXISTING OR PLANNED MSHA RIGHT-OF-WAY SHALL BE CONDUCTED IN STRICT ACCORDANCE WITH THE LATEST EDITIONS OF THE MARYLAND DEPARTMENT OF TRANSPORTATION ROAD AND BRIDGE SPECIFICATIONS AND MARYLAND E & SC REGULATIONS.

7. ALL EXCAVATION AND FILL PLACEMENT SHALL BE TO THE LINES AND GRADES AS SHOWN ON THESE CONSTRUCTION PLANS. CHANGES OR REVISIONS TO THESE CONSTRUCTION PLANS SHALL NOT BE MADE WITHOUT APPROVAL BY THE OWNER, ENGINEER AND ALL APPLICABLE REGULATORY AGENCIES.

8. SUBGRADE ON CUT SHALL BE COMPACTED FOR A MINIMUM OF ONE (1) FOOT IN DEPTH. SUBGRADE IN FILL SHALL MEET THE COMPACTION REQUIREMENTS STATED ABOVE AT ALL LEVELS.

9. AREAS OF WET OR SOFT MATERIAL UNDER ROADS OR BUILDINGS SHALL BE PARTIALLY OVER-EXCAVATED AND REPLACED WITH SUITABLE MATERIAL AS DIRECTED BY A GEOTECHNICAL ENGINEER.

10. AGGREGATE USED IN BASE COURSES SHALL BE CONSTRUCTED ON A COMPACTED SUBGRADE FREE OF ORGANIC MATTER. AGGREGATE SHALL BE WVDOH CLASS 1 AGGREGATE AND SHALL BE PLACED AND COMPACTED IN A MOIST CONDITION SO THAT THE FINES REMAIN MIXED WITH THE COARSER MATERIAL.

11. ASPHALTIC CONCRETE, WHERE APPLICABLE, SHALL BE APPLIED TO THE PREPARED GRAVEL SUBBASE FOLLOWING THE APPLICATION OF A LIQUID ASPHALT PRIME COAT. ASPHALT SHALL CONSIST OF THE PLANT-MIXED BITUMINOUS MATERIAL ROLLED SMOOTH. THE ASPHALT SURFACE SHALL BE SMOOTH, SEAMLESS AND OF A UNIFORM TEXTURE. ASPHALT MATERIAL SHALL COMPLY WITH THE MINIMUM SPECIFICATIONS REQUIRED BY THE MDOT ROAD AND BRIDGE SPECIFICATIONS.

12. THE CONTRACTOR SHALL MILL TO A DEPTH OF 1.5" AND CONSTRUCT A STANDARD 10' MSHA HEEL-IN TO PROVIDE A SMOOTH TRANSITION BETWEEN THE EXISTING AND NEW ASPHALT PAVEMENT.

13. THE CONTRACTOR SHALL MAINTAIN A DUST-FREE GRAVEL SURFACE SUITABLE FOR VEHICULAR INGRESS AND EGRESS DURING CONSTRUCTION.

14. THE HORIZONTAL AND VERTICAL LOCATIONS OF ALL EXISTING UTILITIES, AS SHOWN HEREON, ARE APPROXIMATE ONLY. NO GUARANTEE IS HEREIN MADE OR IMPLIED THAT ALL EXISTING UNDERGROUND UTILITIES ARE SHOWN. IT SHALL BE THE CONTRACTOR'S AND/OR THE OWNER'S RESPONSIBILITY TO CONTACT ALL UTILITY COMPANIES AND TO VERIFY THE TYPE, SIZE, AND LOCATION OF ALL EXISTING UTILITIES PRIOR TO STARTING THE WORK. ANY DISCREPANCIES IN OR FROM THE INFORMATION SHOWN HEREON SHALL BE REPORTED TO TRIAD ENGINEERING, INC., PRIOR TO COMMENCING CONSTRUCTION. DAMAGE TO EXISTING UTILITIES SHALL BE THE CONTRACTOR'S RESPONSIBILITY. FORTY-EIGHT (48) HOURS PRIOR TO ANY EXCAVATION CALL "MISS UTILITY OF MARYLAND" 1-800-257-7777.

GENERAL NOTES

1. CONTRACTOR SHALL FURNISH ALL MATERIALS, LABOR AND EQUIPMENT REQUIRED AND SHALL PERFORM ALL WORK INCLUDING RESTORATION FOR THE COMPLETED INSTALLATION OF UTILITY SYSTEMS AND ALL OTHER IMPROVEMENTS SHOWN OR IMPLIED AS NECESSARY. UNLESS OTHERWISE NOTED, SPECIFICATIONS FOR ALL WORK SHALL BE IN ACCORDANCE WITH THE APPLICABLE STANDARDS AND CONTRACT SPECIFICATIONS OF THE MARYLAND DEPARTMENT OF TRANSPORTATION, DIVISION OF HIGHWAYS, MARYLAND DEPARTMENT OF HEALTH, FROSTBURG DEPARTMENT OF PUBLIC WORKS, MARYLAND DEPARTMENT OF ENVIRONMENTAL PROTECTION, AND ALLEGANY COUNTY.

2. ANY DISCREPANCIES FOUND BETWEEN THE DRAWINGS AND SITE CONDITIONS OR ANY INCONSISTENCIES OR AMBIGUITIES IN DRAWINGS SHALL BE IMMEDIATELY REPORTED TO THE ENGINEER IN WRITING, WHO SHALL PROMPTLY ADDRESS SUCH INCONSISTENCIES OR AMBIGUITIES IN WRITING. WORK DONE BY THE CONTRACTOR AFTER HIS DISCOVERY OF SUCH DISCREPANCIES, INCONSISTENCIES OR AMBIGUITIES, WITHOUT CLARIFICATION FROM THE ENGINEER OF RECORD, SHALL BE DONE AT THE CONTRACTOR'S RISK.

3. CONTRACTOR TO VERIFY THE EXACT LOCATION OF ALL EXISTING UTILITIES AND NOTIFY THE ENGINEER OF ANY CONFLICTS WITH EXISTING AND PROPOSED UTILITIES. DAMAGE TO EXISTING UTILITIES SHALL BE THE CONTRACTOR'S RESPONSIBILITY.

4. CONTRACTOR SHALL BE RESPONSIBLE FOR ALL CONSTRUCTION STAKEOUT. ALL DIMENSIONS AND ELEVATIONS SHOWN ON THE CONTRACT DOCUMENTS SHALL BE FIELD VERIFIED BY THE CONTRACTOR PRIOR TO BEGINNING WORK.

5. CONTRACTOR SHALL OBTAIN, AT HIS EXPENSE, ALL PERMITS REQUIRED PRIOR TO STARTING WORK AND SHALL ADHERE TO THE CONDITIONS IMPOSED.

6. ANY UNUSUAL SUBSURFACE CONDITIONS ENCOUNTERED DURING THE COURSE OF THE WORK SHALL BE BROUGHT TO THE ATTENTION OF THE GEOTECHNICAL ENGINEER/OWNER.

7. ACCESS BY EMERGENCY VEHICLES MUST BE MAINTAINED AT ALL TIMES. ACCESS TO FIRE HYDRANTS MUST NOT BE IMPEDED AT ANY TIME BY PARKED CARS OR EQUIPMENT, CONSTRUCTION MATERIALS, SOIL STOCKPILES, ETC.

8. ALL EXCAVATION AND TRENCHING SHALL BE PERFORMED IN ACCORDANCE WITH OSHA RULES AND REGULATIONS.

9. THE APPROVAL OF THESE PLANS SHALL IN NO WAY RELIEVE THE OWNER OF COMPLYING WITH OTHER APPLICABLE LOCAL, STATE AND FEDERAL REQUIREMENTS.

10. CHANGES OR REVISIONS TO THESE CONSTRUCTION PLANS SHALL NOT BE MADE WITHOUT APPROVAL BY THE OWNER, ENGINEER AND ALL APPLICABLE REGULATORY AGENCIES.

11. THIS PLAN WAS PREPARED WITHOUT THE BENEFIT OF GEOTECHNICAL SERVICES PROVIDED BY TRIAD ENGINEERING. INC..

TRIAD ENGINEERING, INC.
1097 CHAPLIN ROAD
MORGANTOWN, WV 26501
PH: 304.296.2562 FAX: 304.296.8739
OFFICE LOCATIONS
MARYLAND - PENNSYLVANIA - VIRGINIA
WEST VIRGINIA - OHIO

REV. #	DATE	DESCRIPTION	BY

CA/D FILE: C-01 Cover Sheet.DWG
DRAWN BY: RDB
CHECKED BY: WME
DATE: 06-19-2026
SCALE: AS SHOWN

7/14/2026

SHEETZ STORE REBUILD - #62
FROSTBURG, MARYLAND

LEGEND AND NOTES

TRIAD ENGINEERING, INC.
www.triadeng.com

SHEET NUMBER:
C-02
JOB NO.: 01-24-0390

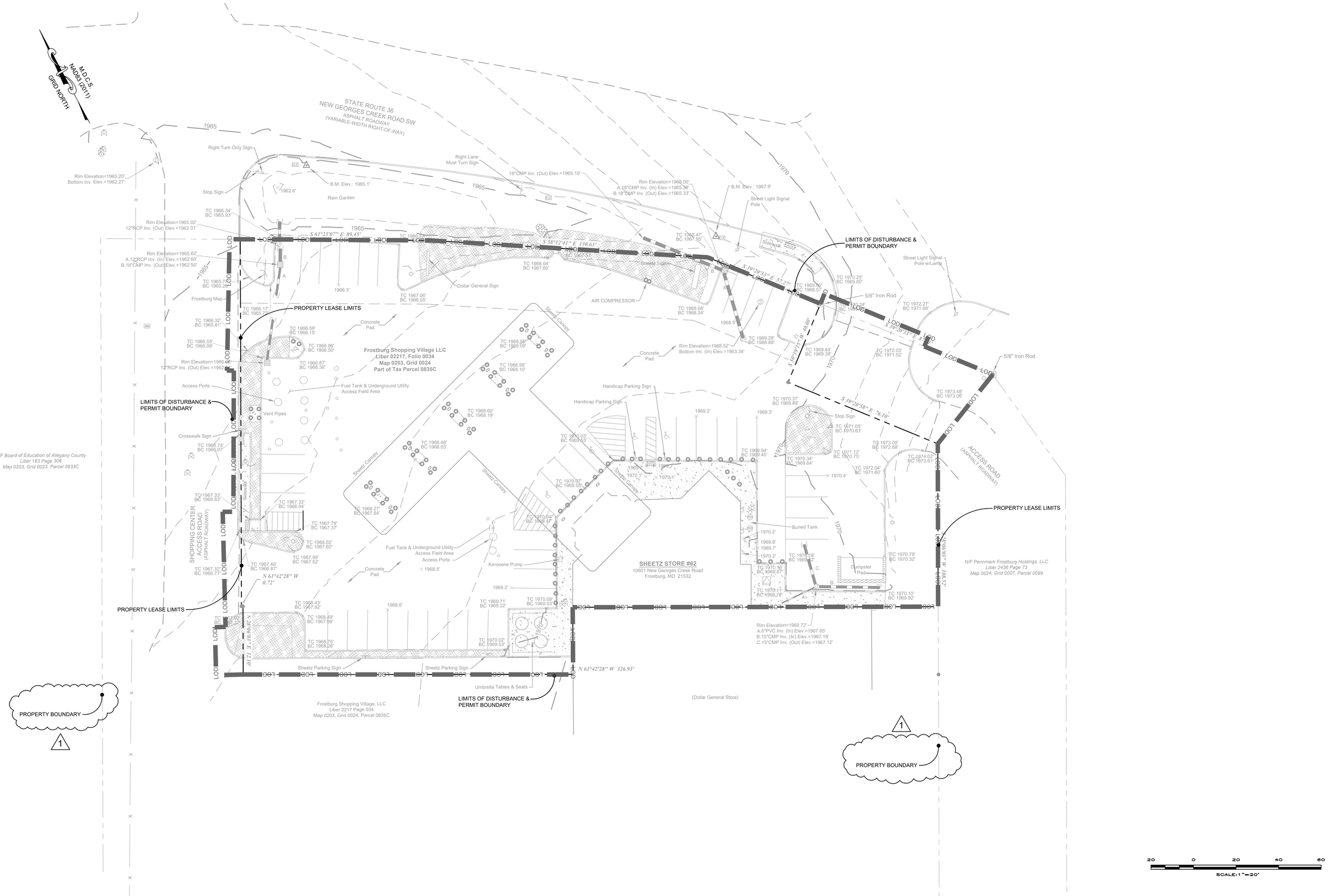

TRIAD ENGINEERING, INC.
1097 CHAPLIN ROAD
MORGANTOWN, WV 26501
PH: 304.296.2562 FAX: 304.296.8739

OFFICE LOCATIONS
MARYLAND • PENNSYLVANIA • VIRGINIA
WEST VIRGINIA • OHIO

REV. #	DATE	DESCRIPTION	BY
1	08/18/2026	PROPERTY BOUNDARY SHOWN AND LABELED	

CADD FILE: C-01 Cover Sheet.DWG	CHECKED BY: WME	SCALE: AS SHOWN
DRAWN BY: RDB		
DATE: 06-19-2026		

7/14/2026

SHEETZ STORE REBUILD - #62
FROSTBURG, MARYLAND

EXISTING CONDITIONS PLAN

TRIAD ENGINEERING, INC.
www.triadeng.com

SHEET NUMBER:
C-03
JOB NO.: 01-24-0390

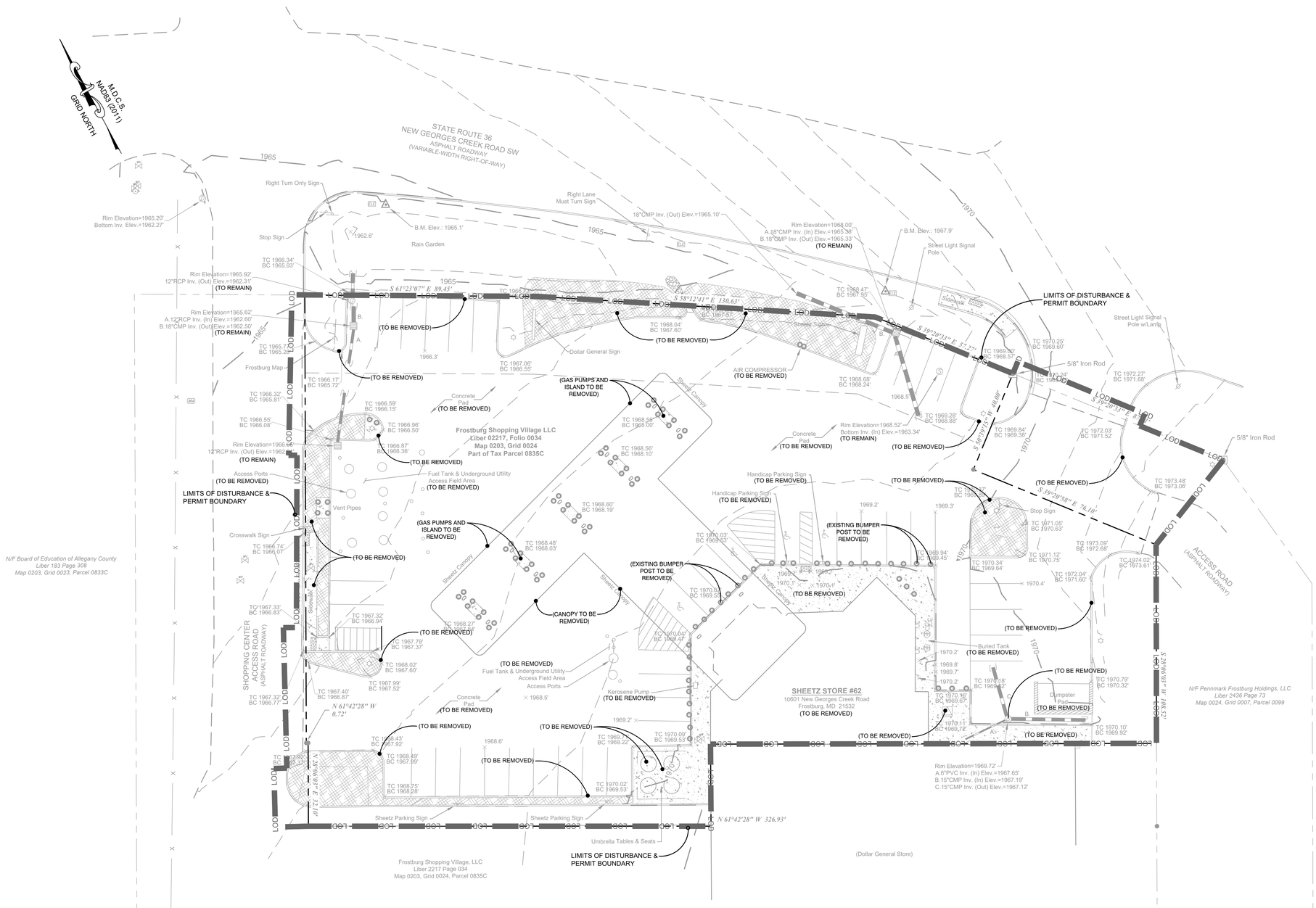

GENERAL DEMOLITION NOTES:

1. THE CONTRACTOR IS RESPONSIBLE FOR OBTAINING ALL LOCAL AND STATE PERMITS REQUIRED FOR DEMOLITION WORK.
2. THE CONTRACTOR SHALL INDEMNIFY AND HOLD HARMLESS THE OWNER AND/OR ENGINEER FOR ANY AND ALL INJURIES AND/OR DAMAGES TO PERSONNEL, EQUIPMENT AND/OR EXISTING FACILITIES IN THE DEMOLITION AND CONSTRUCTION DESCRIBED IN THE PLANS AND SPECIFICATIONS.
3. EXISTING CONDITIONS AS DEPICTED ON THESE PLANS ARE GENERAL AND ILLUSTRATIVE IN NATURE AND DO NOT INCLUDE MECHANICAL, ELECTRICAL AND MISCELLANEOUS STRUCTURES. IT IS THE RESPONSIBILITY OF THE CONTRACTOR TO EXAMINE THE SITE AND BE FAMILIAR WITH EXISTING CONDITIONS PRIOR TO BIDDING ON THE DEMOLITION WORK FOR THIS PROJECT. IF CONDITIONS ENCOUNTERED DURING EXAMINATION ARE SIGNIFICANTLY DIFFERENT THAN THOSE SHOWN, THE CONTRACTOR SHALL NOTIFY THE ENGINEER IMMEDIATELY.
4. ALL EXISTING ABOVE AND BELOW GROUND STRUCTURES WITHIN THE LIMITS OF NEW CONSTRUCTION SHALL BE REMOVED UNLESS NOTED OTHERWISE WITHIN THIS CONSTRUCTION SET, ARCHITECTURAL PLANS AND/OR PROJECT SPECIFICATIONS. THIS INCLUDES FOUNDATION SLABS, WALLS, AND FOOTINGS.
5. ALL DEMOLITION WASTE AND CONSTRUCTION DEBRIS SHALL BE REMOVED BY THE CONTRACTOR AND DISPOSED OF IN A STATE APPROVED WASTE SITE AND IN ACCORDANCE WITH ALL LOCAL AND STATE CODES AND PERMIT REQUIREMENTS.
6. ALL UTILITY REMOVAL, RELOCATION, CUTTING, CAPPING AND/OR ABANDONMENT SHALL BE COORDINATED WITH THE APPROPRIATE UTILITY COMPANY.
7. THE BURNING OF CLEARED MATERIAL AND DEBRIS SHALL NOT BE ALLOWED UNLESS CONTRACTOR GETS WRITTEN AUTHORIZATION FROM THE LOCAL AUTHORITIES.
8. UTILITY CONTACTS ARE LISTED ON THE TITLE SHEET (C-01).
9. EROSION AND SEDIMENTATION CONTROL MEASURES AROUND AREAS OF DEMOLITION SHALL BE INSTALLED PRIOR TO INITIATION OF DEMOLITION ACTIVITIES. REFER TO E&S PLAN FOR DETAILS.
10. ASBESTOS OR HAZARDOUS MATERIALS, IF FOUND ON SITE, SHALL BE REMOVED BY A LICENSED HAZARDOUS MATERIALS CONTRACTOR. CONTRACTOR SHALL NOTIFY OWNER IMMEDIATELY IF HAZARDOUS MATERIALS ARE ENCOUNTERED.
11. CONTRACTOR SHALL PROTECT ALL CORNER PINS, MONUMENTS, PROPERTY CORNERS, AND BENCHMARKS DURING DEMOLITION ACTIVITIES. IF DISTURBED, CONTRACTOR SHALL HAVE DISTURBED ITEMS RESET BY A LICENSED SURVEYOR AT NO ADDITIONAL COST TO THE OWNER.
12. CONTRACTOR SHALL ADHERE TO ALL LOCAL, STATE, FEDERAL, AND OSHA REGULATIONS WHEN OPERATING DEMOLITION EQUIPMENT AROUND UTILITIES.
13. CONTRACTOR SHALL PROVIDE AND MAINTAIN TRAFFIC CONTROL MEASURES IN ACCORDANCE WITH THE (MARYLAND DEPARTMENT OF TRANSPORTATION MANUAL ON TEMPORARY TRAFFIC CONTROL MANUAL 2006 EDITION) STANDARDS, AND AS REQUIRED BY LOCAL AGENCIES WHEN WORKING IN AND/OR ALONG STREETS, ROADS, HIGHWAYS, ETC. IT SHALL BE THE CONTRACTOR'S RESPONSIBILITY TO OBTAIN APPROVAL AND COORDINATE WITH LOCAL AND/OR STATE AGENCIES REGARDING THE NEED, EXTENT, AND LIMITATIONS ASSOCIATED WITH INSTALLING AND MAINTAINING TRAFFIC CONTROL MEASURES.
14. CONTRACTOR SHALL PROTECT AT ALL TIMES ADJACENT STRUCTURES AND ITEMS FROM DAMAGE DUE TO DEMOLITION ACTIVITIES.
15. DEMOLITION CONTRACTOR SHALL COORDINATE EXISTING FACILITIES UTILITY DISCONNECTS WITH THE SHEETZ CONSTRUCTION REPRESENTATIVE A MINIMUM 7 DAYS PRIOR TO ANTICIPATED DEMOLITION OF STRUCTURES.
16. CONTRACTOR SHALL REFER TO OTHER PLANS WITHIN THIS CONSTRUCTION SET FOR OTHER PERTINENT INFORMATION.
17. EXISTING UNDERGROUND AND ABOVE GROUND UTILITIES TO BE RELOCATED, REMOVED AND/OR ABANDONED IN ACCORDANCE WITH RESPECTIVE UTILITY STANDARDS. CONTRACTOR SHALL VERIFY IF UTILITIES ARE REQUIRED BY OFF-SITE PARTIES PRIOR TO REMOVAL OR ABANDONMENT.

TRIAD ENGINEERING, INC.
1097 CHAPLIN ROAD
MORGANTOWN, WV 26501
PH: 304.296.2562 FAX: 304.296.8739
OFFICE LOCATIONS
MARYLAND • PENNSYLVANIA • VIRGINIA
WEST VIRGINIA • OHIO

REV. #	DATE	DESCRIPTION	BY

CADD FILE: C-01 Cover Sheet.DWG	CHECKED BY: WME	SCALE: AS SHOWN
DRAWN BY: RDB		DATE: 06-19-2026

7/14/2026

SHEETZ STORE REBUILD - #62
FROSTBURG, MARYLAND

DEMOLITION PLAN

TRIAD ENGINEERING, INC.
www.triadeng.com

SHEET NUMBER:
C-04
JOB NO.: 01-24-0390

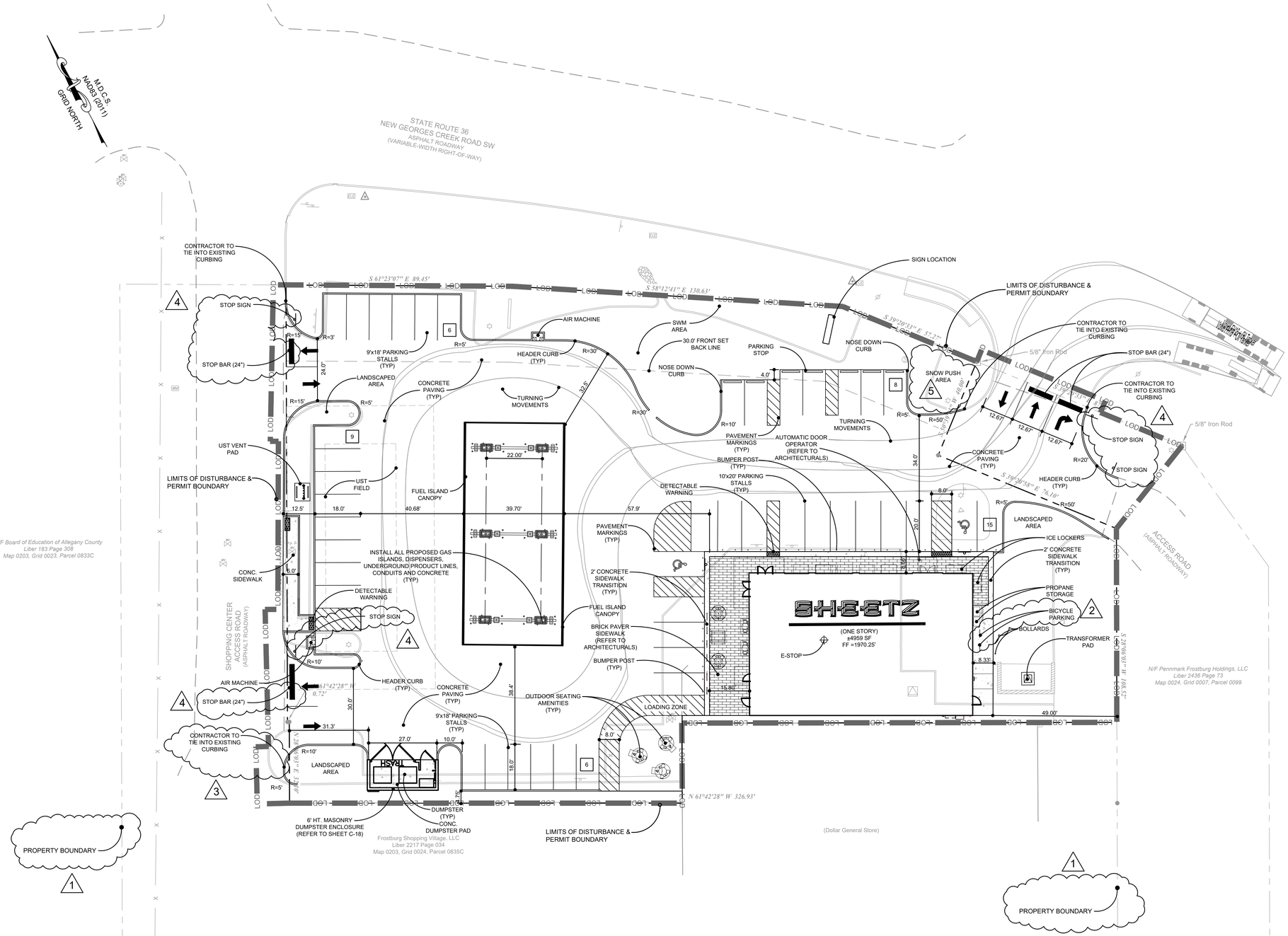

LAYOUT NOTES:

LP - DENOTES PROPOSED LIGHT POLE

1. THE CONTRACTOR IS RESPONSIBLE FOR ALL LAYOUT, GRADING, AND UTILITY IMPROVEMENTS WITHIN THE LIMITS OF CLEARING AND GRADING AS SHOWN.
2. REFER TO SHEETS C-09 THROUGH C-13 FOR CONSTRUCTION DETAILS.
3. ALL SIGNAGE TO BE IN ACCORDANCE WITH MSHA, ADA & MUTCD STANDARDS (LATEST EDITIONS).
4. EXISTING STRUCTURES LOCATED ONSITE AND NOTED TO BE REMOVED, SHALL BE IN ACCORDANCE WITH CITY OF FROSTBURG REQUIREMENTS.
5. ALL LABELED PLAN ELEMENTS ARE PROPOSED UNLESS OTHERWISE NOTED.
6. CONTRACTOR SHALL REFER TO THE ARCHITECTURAL PLANS FOR THE EXACT LOCATION OF UTILITY ENTRANCES, BUILDING DIMENSIONS, ROOF LEADERS, EXIT DOORS, AND OUTSIDE EQUIPMENT.
7. ALL DIMENSIONS ARE TO BUILDING FACE, FACE OF CURB OR EDGE OF SIDEWALK UNLESS NOTED OTHERWISE.
8. CONTRACTOR SHALL PROVIDE ALL LABOR AND MATERIALS FOR THE INSTALLATION OF PAVEMENT MARKINGS AS SHOWN ON THE CONSTRUCTION PLANS.
9. AREAS LOCATED OUTSIDE OF PAVEMENT AND/OR CONCRETE SHALL BE LANDSCAPED OPEN SPACE.
10. ALL SITE WORK SHALL BE DONE IN ACCORDANCE WITH THE PLANS PREPARED BY TRIAD ENGINEERING, INC., THE CURRENT REQUIREMENTS OF ALLEGANY COUNTY, THE APPLICABLE SECTIONS OF THE MARYLAND DIVISION OF HIGHWAYS STANDARD SPECIFICATIONS FOR ROADWAY CONSTRUCTION, AND ALL OTHER PERTINENT FEDERAL AND STATE LAWS.
11. THE CONTRACTOR SHALL COMPLY AT ALL TIMES WITH APPLICABLE FEDERAL, STATE AND LOCAL LAWS, PROVISIONS, AND POLICIES GOVERNING SAFETY AND HEALTH, INCLUDING THE FEDERAL CONSTRUCTION SAFETY ACT (PUBLIC LAW 91-54), FEDERAL REGISTER, CHAPTER XVII, PART 1926 OF TITLE 29 REGULATIONS, OCCUPATIONAL SAFETY AND HEALTH REGULATIONS FOR CONSTRUCTION, AND SUBSEQUENT PUBLICATIONS UPDATING THESE REGULATIONS.
12. THE CONTRACTOR SHALL BE RESPONSIBLE FOR EXAMINING THE AREAS AND CONDITIONS UNDER WHICH THE PROJECT IS TO BE CONSTRUCTED PRIOR TO THE SUBMISSION OF A BID. SUBMISSION OF A BID SHALL BE CONSTRUED TO MEAN THE CONTRACTOR HAS REVIEWED THE SITE AND IS FAMILIAR WITH CONDITIONS AND CONSTRAINTS OF THE SITE.
13. ALL EXISTING TREES, VEGETATION, PAVEMENTS, CONCRETE FOUNDATIONS, STRUCTURES AND ORGANIC TOPSOIL SHALL BE STRIPPED AND REMOVED FROM NEW CONSTRUCTION AREAS UNLESS NOTED OTHERWISE.
14. ALL AREAS NOT PAVED SHALL BE TOPSOILED, SEEDED, MULCHED OR LANDSCAPED UNLESS OTHERWISE NOTED IN THE CONSTRUCTION DRAWINGS, SITE SPECIFICATIONS OR INSTRUCTED BY THE OWNER.
15. CONTRACTOR SHALL REFER TO OTHER PLANS WITHIN THIS CONSTRUCTION SET FOR OTHER PERTINENT INFORMATION.
16. IF APPLICABLE, OUTDOOR STORAGE BINS USED FOR COOKING OIL SHALL BE STORED WITHIN THE DUMPSTER ENCLOSURE.

SHEETZ LAYOUT NOTES:

1. CONTRACTOR SHALL REFER TO THE SHEETZ ARCHITECTURAL PLANS FOR THE EXACT LOCATION OF UTILITY ENTRANCES, BUILDING DIMENSIONS,
   ROOF LEADERS, EXIT DOORS, EXIT RAMPS AND PORCHES.
2. ALL NON-LANDSCAPED ISLANDS SHALL BE PAINTED WITH STRIPES 4" WIDE, AT 45° AND 2 FEET O.C.
3. ALL STRIPING SHALL BE 4" WIDE UNLESS NOTED OTHERWISE. HIGHWAY GRADE PAINT WITH COLOR COORDINATED WITH OWNER.
4. CONTRACTOR SHALL COORDINATE FINAL LOCATION OF THE PYLON SIGN WITH SHEETZ.
5. LAWN AREA SHALL BE MINIMUM 6" TOPSOIL WITH PERMANENT SEEDING AND MULCHING.

TRIAD ENGINEERING, INC.
1097 CHAPLIN ROAD
MORGANTOWN, WV 26501
PH: 304.296.2562 FAX: 304.296.8739
OFFICE LOCATIONS
MARYLAND • PENNSYLVANIA • VIRGINIA
WEST VIRGINIA • OHIO

REV. #	DATE	DESCRIPTION	BY
5	08/18/2026	DESIGNATED SNOW PUSH AREA	
4	08/18/2026	UPDATED LABELS AND SIGNAGE	
3	08/18/2026	UPDATED CURB TIE IN LOCATION	
2	08/18/2026	ADDED BICYCLE PARKING	
1	08/18/2026	PROPERTY BOUNDARY SHOWN AND LABELED	

CADD FILE: C-01 Cover Sheet.DWG
DRAWN BY: RDB
CHECKED BY: WME
SCALE: AS SHOWN
DATE: 06-19-2026

7/14/2026

SHEETZ STORE REBUILD - #62
FROSTBURG, MARYLAND

LAYOUT PLAN

TRIAD ENGINEERING, INC.
www.triadeng.com

SHEET NUMBER:
C-05
JOB NO.: 01-24-0390

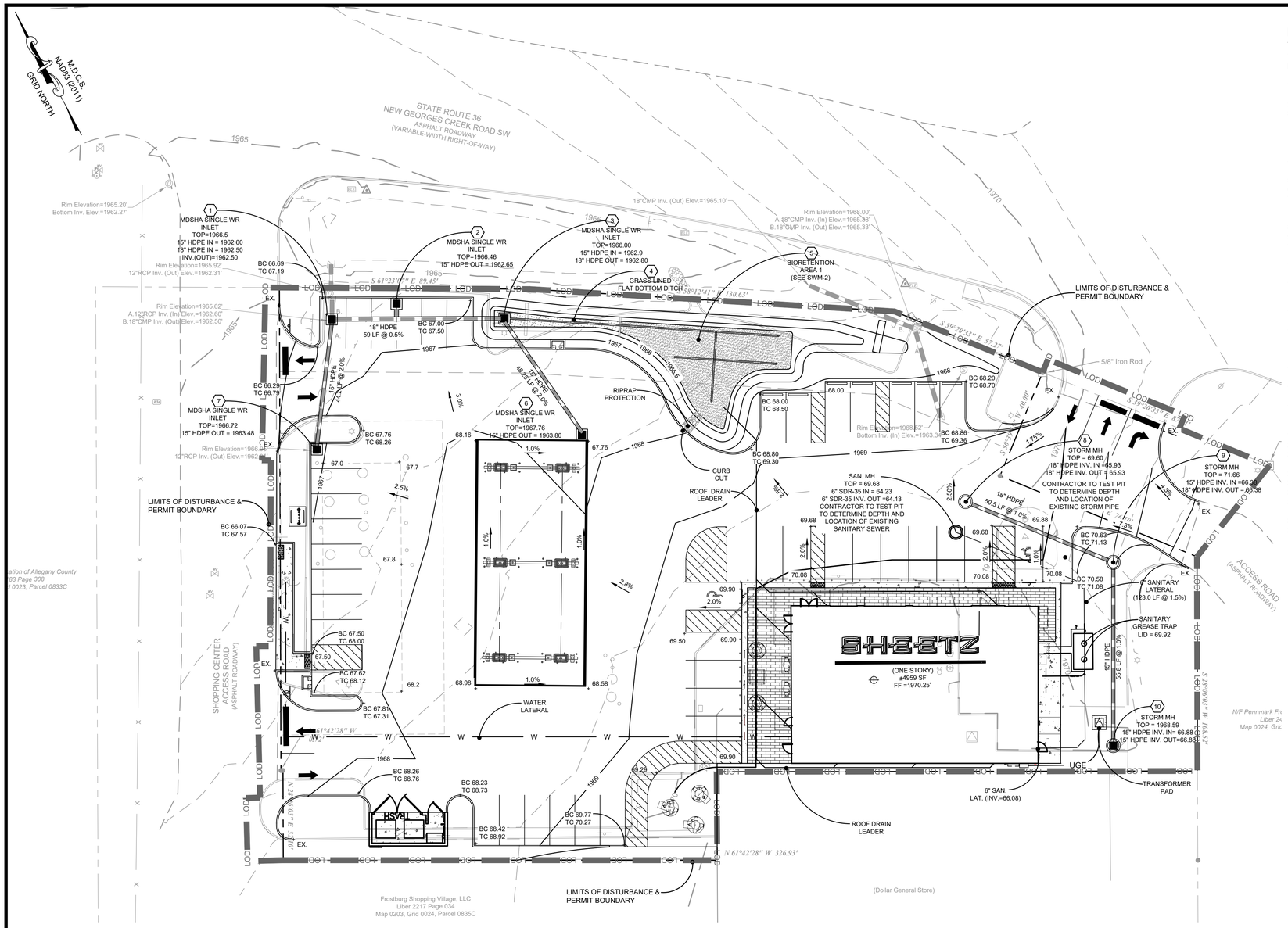

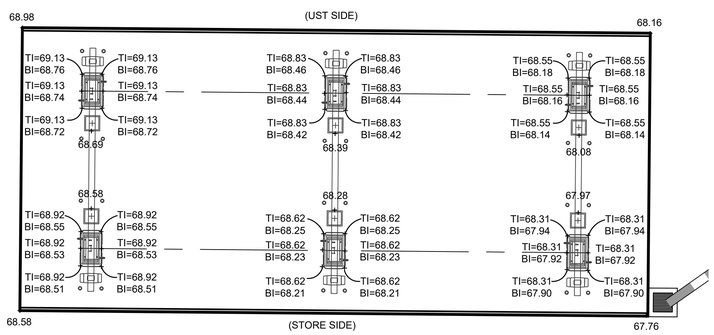

FUEL ISLAND SPOT ELEVATIONS
SCALE 1"=10'

UTILITY NOTES:

TP - DENOTES TEST PIT LOCATION
DS - DENOTES DOWNSPOUT LOCATION

1. CONTRACTOR SHALL COORDINATE WITH APPROPRIATE UTILITIES AND PERFORM NECESSARY TESTPITS FOR UTILITIES PRIOR TO COMMENCEMENT OF CONSTRUCTION AND EARTHWORK ACTIVITIES.
2. PROPOSED UTILITIES CROSSING STORM SEWER SHALL MAINTAIN 1.5' OF VERTICAL CLEARANCE.
3. REFER TO ARCHITECTURALS AND MEP FOR ROOF DRAIN LEADER INVERTS. CONTRACTOR TO EXTEND LEADERS 5', OR AS NOTED OTHERWISE, FROM EDGE OF BUILDING TO CLEANOUT AND TIE TO NEAREST DOWNSTREAM STRUCTURE MAINTAINING 1% SLOPE MINIMUM AND 2' COVER.
   ROOF DRAIN LEADERS SHALL BE 6" PVC. CONTRACTOR TO DETERMINE THE EXACT DOWN SPOUT LOCATIONS AT THE BUILDING.
4. ALL INLET GRATES WITHIN THE PAVED AREAS SHALL BE ALIGNED TO BE PARALLEL WITH THE ADJACENT CURB AND/OR SIDEWALK. POSITION INLET BASE STRUCTURE ACCORDINGLY.
5. ALL GRATES ARE TO BE ADA COMPLIANT.
6. REFER TO SHEETS SWM-1 - SWM-3 FOR STORM STRUCTURE DETAILS.
7. EXISTING UNDERGROUND AND ABOVE GROUND UTILITIES TO BE RELOCATED, REMOVED AND/OR ABANDONED IN ACCORDANCE WITH RESPECTIVE UTILITY STANDARDS. CONTRACTOR SHALL VERIFY IF UTILITIES ARE REQUIRED BY OFF-SITE PARTIES PRIOR TO REMOVAL OR ABANDONMENT.
8. ALL PROPOSED UTILITIES TO BE INSTALLED UNDERGROUND.
9. ALL STORM PIPE JOINTS TO BE SOIL TIGHT CONNECTIONS.
10. REFER TO ARCHITECTURALS FOR BUILDING LATERAL CONNECTION TO SITE CLEANOUT LOCATED 3', OR OTHERWISE SPECIFIED, OUTSIDE OF BUILDING.
11. CONTRACTOR SHALL COORDINATE WITH TELEPHONE, CABLE COMPANY, AND FIBER OPTICS COMPANY FOR CONNECTION OF SAID UTILITIES.
12. CONTRACTOR SHALL COORDINATE ELECTRIC CONNECTION WITH FIRST ENERGY.
13. CONTRACTOR SHALL REFER TO MECHANICAL, ELECTRICAL & PLUMBING (MEP) PLANS FOR EXACT UTILITY ENTRY POINTS INTO BUILDING.
14. HEAVY DUTY STORM AND SANITARY CLEANOUTS SHALL BE USED IN TRAVELWAY/PARKING AREAS. STORM CLEANOUT TOPS WITHIN PEDESTRIAN WALKWAYS TO BE SLIP RESISTANT BRASS SET FLUSH WITH WALKWAYS.
15. BEFORE EXCAVATION, ALL UNDERGROUND UTILITIES SHALL BE LOCATED IN THE FIELD BY THE PROPER AUTHORITIES. THE CONTRACTOR SHALL NOTIFY MISS UTILITY AT 1-800-245-4848. THE LOCATION OF ALL UTILITIES AND UNDERGROUND STRUCTURES ARE APPROXIMATE AND MAY NOT ALL BE SHOWN. IT IS THE RESPONSIBILITY OF THE CONTRACTOR TO DETERMINE THE EXISTENCE AND EXACT LOCATION OF ALL UTILITIES AND UNDERGROUND STRUCTURES.
16. IT IS THE RESPONSIBILITY OF THE CONTRACTOR TO BID AND PERFORM ALL UTILITY WORK IN COMPLIANCE TO ALL APPLICABLE LOCAL AND STATE CODES AND REGULATIONS.
17. THE CONTRACTOR SHALL BE RESPONSIBLE FOR ALL FEES ASSOCIATED WITH THE INSTALLATION, INSPECTING, TESTING AND FINAL ACCEPTANCE OF ALL PROPOSED UTILITIES CONSTRUCTION.
18. ALL UTILITIES SHALL BE INSTALLED IN ACCORDANCE WITH THE SPECIFICATIONS OF THE RESPECTIVE UTILITY COMPANY. IT IS THE RESPONSIBILITY OF THE CONTRACTOR TO ENSURE ALL UTILITIES ARE INSTALLED CORRECTLY TO MEET PROJECT REQUIREMENTS WHETHER PERFORMED BY THE CONTRACTOR OR NOT.
19. SANITARY LATERAL SHALL BE CONSTRUCTED IN ACCORDANCE WITH CITY OF FROSTBURG STANDARDS.
20. CONTRACTOR TO MAINTAIN A MINIMUM 3' OF COVER ON SANITARY LINES.
21. WATERLINE AND WATERLINE APPURTENANCES SHALL BE CONSTRUCTED IN ACCORDANCE WITH CITY OF FROSTBURG STANDARDS.
22. CONTRACTOR TO TIE FOUNDATION DRAINS, IF APPLICABLE, INTO NEAREST DOWNSTREAM STORM STRUCTURE.
23. FLOGARD +PLUS WATER QUALITY INSERTS TO BE INSTALLED IN ALL STRUCTURES IN PAVED TRAVELWAYS.
24. REFER TO MEP PLANS FOR SITE LIGHTING, ELECTRIC CONNECTION AND CONCRETE BASE DETAILS.
25. GAS COMPANY TO PROVIDE GAS SERVICE LINES AND CONNECTION. REFER TO PLANS BY COLUMBIA GAS FOR EXACT GAS SERVICE LINE LOCATIONS.
26. CONTRACTOR TO DETERMINE EXACT UTILITY TIE IN POINTS AT THE BUILDING.
27. CONTRACTOR TO RAISE EXISTING UTILITY VAULTS TO PROPOSED GRADES WHERE APPLICABLE.

SHEETZ UTILITY NOTES:

1. CONTRACTOR SHALL COORDINATE WITH THE APPROPRIATE UTILITY COMPANY ON THE ADDITION, REMOVAL AND/OR RELOCATION OF UTILITIES AND UTILITY POLES AND THE EXTENSION OF ALL PROPOSED UTILITIES TO SHEETZ STORE.
2. ALL UTILITIES SHALL BE INSTALLED IN ACCORDANCE WITH THE SPECIFICATIONS OF THE RESPECTIVE UTILITY COMPANY. IT IS THE RESPONSIBILITY OF THE CONTRACTOR TO ENSURE ALL UTILITIES ARE INSTALLED CORRECTLY TO MEET PROJECT REQUIREMENTS WHETHER PERFORMED BY THE CONTRACTOR OR NOT.
3. AN AS-BUILT DRAWING OF NEW UTILITY SERVICES SHALL BE PREPARED BY THE CONTRACTOR AND SUBMITTED TO THE OWNER UPON COMPLETION OF THE PROJECT.
4. UTILITY COMPANIES AND CONTACTS ARE LISTED ON SHEET (C-01).
5. CONDUIT LOCATIONS TO PYLON SIGNS AND SITE LIGHT POLES TO BE COORDINATED WITH SHEETZ SUPERINTENDENT.
6. CONTRACTOR SHALL COORDINATE WITH SHEETZ SUPERINTENDENT ON LOCATION AND SIZE OF THE GREASE TRAP. GREASE TRAP SHALL BE PROVIDED WITH "T" PIPE IN OUTFLOW CHAMBER. ALL SANITARY SEWER PIPE SHALL BE SDR-35 PVC UNLESS OTHERWISE NOTED.
7. CONTRACTOR SHALL COORDINATE WITH SHEETZ ON CONDUIT ROUTE TO STORE FROM THE TRANSFORMER AND/OR SERVICE UTILITY POLE FOR TELEPHONE AND ELECTRICAL SERVICE.
8. CONTRACTOR SHALL REFER TO OTHER PLANS WITHIN THIS CONSTRUCTION SET FOR OTHER PERTINENT INFORMATION.

GRADING NOTES:

TW - DENOTES TOP OF WALL
BW - DENOTES BOTTOM OF WALL
TC - DENOTES TOP OF CURB SPOT
BC - DENOTES BOTTOM OF CURB SPOT
EC - DENOTES EDGE OF CONCRETE SPOT
EP - DENOTES EDGE OF PAVEMENT
TI - DENOTES TOP OF ISLAND
BI - DENOTES BOTTOM OF ISLAND
HP - DENOTES HIGH POINT ELEVATION
LP - DENOTES LOW POINT ELEVATION

1. THE CONTRACTOR SHALL MAINTAIN A SMOOTH TRANSITION WHEN TYING PROPOSED ENTRANCE GRADES INTO EXISTING ROADWAY, CURBS AND SIDEWALKS.
2. A SMOOTHING GRADE SHALL BE MAINTAINED ALONG PAVEMENT AND PAVEMENT/CONCRETE TRANSITIONS, TO PRECLUDE THE FORMING OF FALSE GUTTERS AND/OR PONDING OF ANY WATER ON THE PAVED AREAS.
3. AREAS LOCATED OUTSIDE OF PAVEMENT AND/OR CONCRETE SHALL BE LANDSCAPED OPEN SPACE.
4. CONTRACTOR TO ADJUST GRADES AROUND AND OR RAISE ALL UTILITY VAULTS AS NEEDED TO ALLOW FOR POSITIVE DRAINAGE AWAY FROM STRUCTURES AND INTO PROPOSED STORM DRAINAGE STRUCTURES WITH CONFIRMATION FROM TRIAD ENGINEERING.
5. CONTRACTOR TO MAINTAIN LIMITS OF CLEARING AND GRADING AND ENSURE CONSTRUCTION MATERIALS AND DEBRIS ARE CONFINED WITHIN THE CLEARING AND GRADING LIMITS AS SHOWN TO PRECLUDE ANY OFFSITE DISTURBANCE TO EXISTING VEGETATION AND/OR SLOPES ADJACENT TO THE SITE.
6. CONTRACTOR SHALL REFER TO ARCHITECTURAL PLANS FOR SIDEWALK TREATMENT AT BUILDING ENTRY POINTS.
7. CONCRETE CONTROL JOINT AND EXPANSION JOINT LOCATIONS TO BE COORDINATED WITH ARCHITECTURAL DRAWINGS AND SPECIFICATIONS.
8. ALL SLOPES SHALL BE 2:1 (HORIZONTAL:VERTICAL) MAXIMUM UNLESS NOTED OTHERWISE.
9. CONTRACTOR SHALL TEST PIT PRIOR TO CONSTRUCTION TO VERIFY ELEVATIONS AND REPORT ANY DISCREPANCIES TO ENGINEER OF RECORD.
10. ALL AREAS NOT PAVED SHALL BE TOPSOILED, SEEDED, MULCHED OR LANDSCAPED UNLESS OTHERWISE NOTED IN THE CONSTRUCTION DRAWINGS, SITE SPECIFICATIONS OR INSTRUCTED BY THE OWNER.
11. ALL EXISTING TREES, VEGETATION, PAVEMENTS, CONCRETE FOUNDATIONS, STRUCTURES AND ORGANIC TOPSOIL SHALL BE STRIPPED AND REMOVED FROM NEW CONSTRUCTION AREAS UNLESS NOTED OTHERWISE.

20 0 20 40 60
SCALE:1"=20'

TRIAD ENGINEERING, INC.
1097 CHAPLIN ROAD
MORGANTOWN, WV 26501
PH: 304.296.2562 FAX: 304.296.8739
OFFICE LOCATIONS
MARYLAND • PENNSYLVANIA • VIRGINIA
WEST VIRGINIA • OHIO

REV. #	DATE	DESCRIPTION	BY

CADD FILE: C-01 Cover Sheet.DWG
DRAWN BY: RDB
CHECKED BY: WME
DATE: 06-19-2026
SCALE: AS SHOWN

7/14/2026

SHEETZ STORE REBUILD - #62
FROSTBURG, MARYLAND

GRADING AND UTILITY PLAN

TRIAD ENGINEERING, INC.
www.triadeng.com

SHEET NUMBER:
C-06
JOB NO.: 01-24-0390

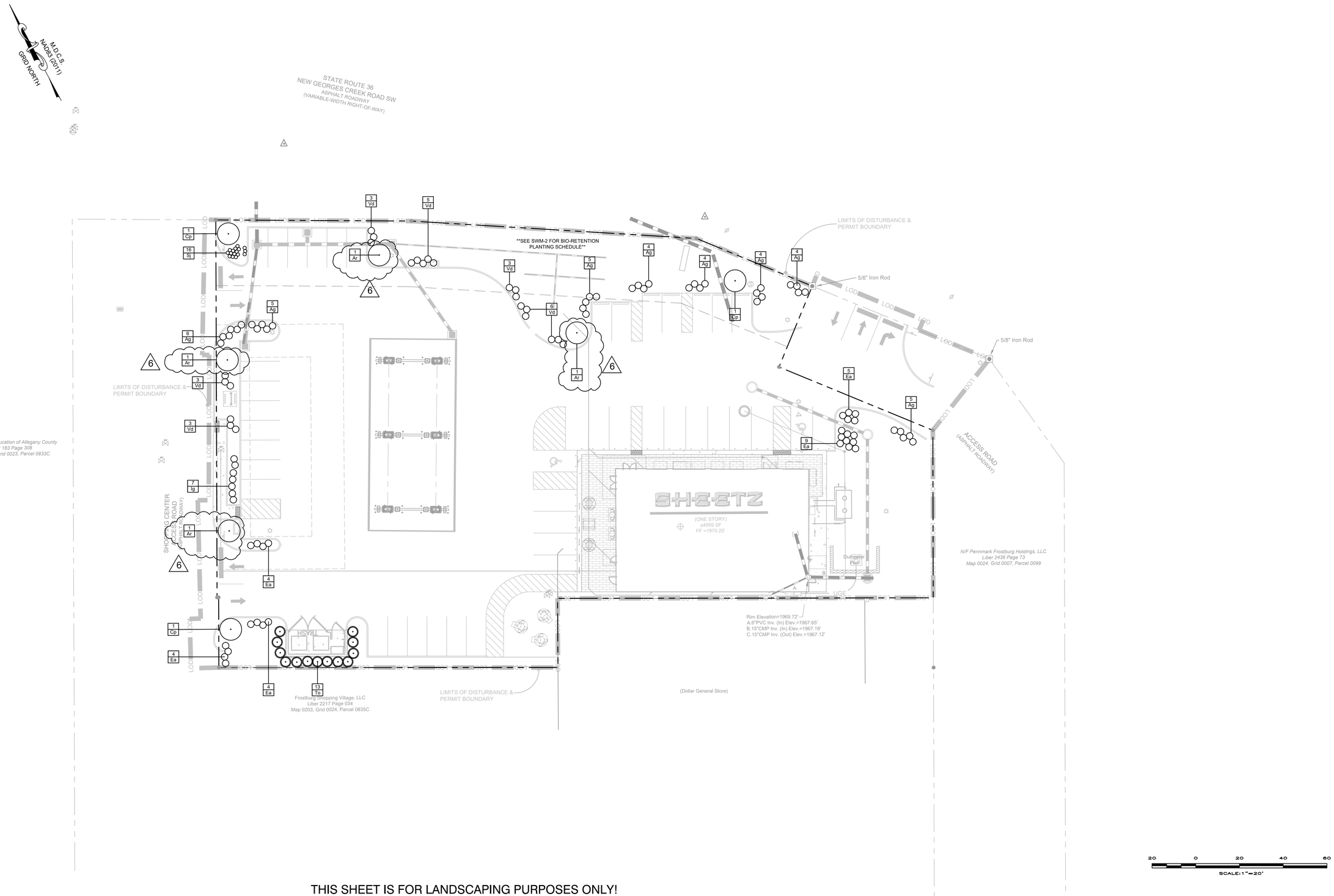

THIS SHEET IS FOR LANDSCAPING PURPOSES ONLY!

TRIAD ENGINEERING, INC.
1097 CHAPLIN ROAD
MORGANTOWN, WV 26501
PH: 304.296.2562 FAX: 304.296.8739

OFFICE LOCATIONS
MARYLAND • PENNSYLVANIA • VIRGINIA
WEST VIRGINIA • OHIO

REV. #	DATE	DESCRIPTION	BY
6	08/18/2026	UPDATED TO LARGER SHADE TREE	

CADD FILE: C-01 Cover Sheet.DWG
DRAWN BY: RDB
CHECKED BY: WME
DATE: 06-19-2026
SCALE: AS SHOWN

7/14/2026

SHEETZ STORE REBUILD - #62
FROSTBURG, MARYLAND

LANDSCAPE PLAN

TRIAD
TRIAD ENGINEERING, INC.
www.triadeng.com

SHEET NUMBER:
C-07
JOB NO.: 01-24-0390

NOTES: 1.) REMOVE ENOUGH WHOLE BRANCHES (NOT JUST END TIPS) TO REDUCE FOLIAGE BY 1/3. NEVER LEAVE 'Y' CROTCHES OR DOUBLE LEADERS. RETAIN NORMAL PLANT SHAPE.

2.) LAY BACK BURLAP FROM TOP OF BALL. REMOVE ALL WIRES, NYLON ROPE OR STRING FROM BALL. PLASTIC BURLAP NOT PERMITTED.

3.) HOLE SHALL BE 2x DIA. OF THE BALL WHEN CONDITIONS PERMIT.

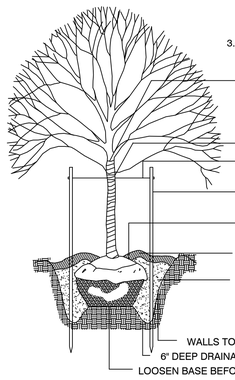

TYPICAL DECIDUOUS TREE PLANTING DETAIL

NOTES: 1.) REMOVE THE PLANT BY CUTTING THE CONTAINER, OR INVERTING IT

2.) USING A KNIFE OR SHARP BLADE, BUTTERFLY INTO QUARTERS THE ROOT BALL TO BRING THE ROOT SYSTEM CLOSER TO THE SURFACE SOIL LINE.

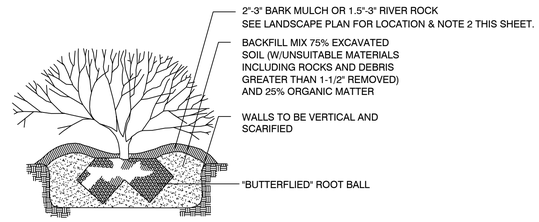

TYPICAL CONTAINER STOCK PLANTING DETAIL

NOTES: 1.) LAY BACK BURLAP FROM TOP OF BALL. REMOVE ALL WIRES, NYLON ROPE OR STRING FROM BALL. PLASTIC BURLAP NOT PERMITTED.

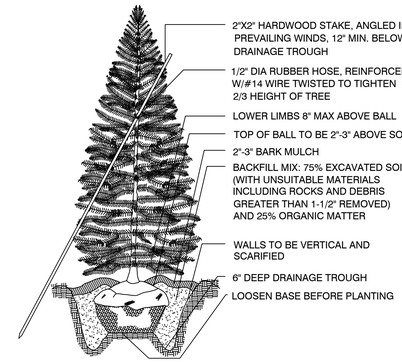

TYPICAL CONIFEROUS TREE PLANTING DETAIL

GENERAL

i. SCOPE

A. THE LANDSCAPE CONTRACTOR SHALL PROVIDE ALL MATERIALS, LABOR AND EQUIPMENT TO COMPLETE ALL LANDSCAPE WORK AS SHOWN ON THE PLANS AND SPECIFICATIONS.
B. TOTAL NUMBER OF PLANS SHALL BE AS DRAWN ON THE LANDSCAPE PLAN. IF THIS TOTAL DIFFERS FROM THE PLANT KEY, THE LANDSCAPE CONTRACTOR IS TO NOTIFY THE LANDSCAPE ARCHITECT.

II. STANDARDS

A. ALL PLANT MATERIAL WILL CONFORM TO THE CURRENT ISSUE OF THE AMERICAN STANDARD FOR NURSERY STOCK PUBLISHED BY THE AMERICAN ASSOCIATION OF NURSERYMEN.
B. PLANT MATERIAL MUST BE SELECTED FROM NURSERIES THAT HAVE BEEN INSPECTED BY STATE OR FEDERAL AGENCIES.

III. SUBSTITUTIONS

A. IF A PLANT IS FOUND NOT TO BE SUITABLE OR AVAILABLE, THE LANDSCAPE CONTRACTOR IS TO NOTIFY THE LANDSCAPE ARCHITECT.
B. THE LANDSCAPE ARCHITECT SHALL THEN PROVIDE THE LANDSCAPE CONTRACTOR A REASONABLE ALTERNATIVE.
C. ALL SUBSTITUTES MUST BE OF THE SAME SIZE, VALUE AND QUALITY AS THE ORIGINAL PLANT.

IV. UTILITIES

A. THE LANDSCAPE CONTRACTOR SHALL NOTIFY UTILITY COMPANIES AHEAD OF CONSTRUCTION TO LOCATE MAIN UTILITIES.
B. STREET LIGHTING AND OTHER UTILITIES THAT ARE PUT IN BY THE GENERAL CONTRACTOR ARE TO BE LOCATED BY THE OWNER OR GENERAL CONTRACTOR.
C. IF THERE IS A CONFLICT WITH THE UTILITIES AND THE PLANTING, THE LANDSCAPE ARCHITECT IS TO BE RESPONSIBLE FOR RELOCATING PLANTS PRIOR TO THE PLANTING PROCESS.

V. DRAINAGE

NO PLANTS SHALL BE PLANTED IN SITUATIONS THAT SHOW OBVIOUS POOR DRAINAGE. SUCH SITUATIONS SHALL BE BROUGHT TO THE ATTENTION OF THE LANDSCAPE ARCHITECT AND OWNER, AND IF THEY DEEM NECESSARY, THE PLANTS SHALL BE RELOCATED OR THE CONTRACT SHALL BE ADJUSTED TO ALLOW FOR DRAINAGE CORRECTION AT A NEGOTIATED COST.

VI. MAINTENANCE AND WARRANTY

A. THE LANDSCAPE CONTRACTOR SHALL BE RESPONSIBLE FOR MAINTENANCE OF ALL PLANT MATERIALS PRIOR TO PLANTING AND AFTER PLANTING UNTIL ALL WORK IS COMPLETE AND THE WORK HAS BEEN ACCEPTED BY THE OWNER.

B. FOLLOWING ACCEPTANCE BY THE OWNER THE LANDSCAPE CONTRACTOR SHALL GUARANTEE ALL PLANT MATERIALS FOR A PERIOD OF ONE YEAR. ANY PLANTS THAT HAVE DIED OR ARE IN FAILING CONDITION SHALL BE REPLACED. THE OWNER MAY NOTIFY THE LANDSCAPE ARCHITECT TO DETERMINE THE NEED FOR REPLACEMENT.

VII. WORKMANSHIP

A. DURING PLANTING, ALL AREAS SHALL BE KEPT NEAT AND CLEAN, AND ALL REASONABLE PRECAUTIONS SHALL BE TAKEN TO AVOID DAMAGE TO EXISTING PLANTS, TURF AND STRUCTURES.
B. UPON COMPLETION, ALL DEBRIS AND WASTE MATERIAL RESULTING FROM PLANTING OPERATIONS SHALL BE REMOVED FROM THE PROJECT AND THE AREA CLEANED UP.

C. ANY DAMAGED AREAS SHALL BE RESTORED TO THEIR ORIGINAL CONDITION.

VIII. WATER

IF AVAILABLE ON SITE, THE OWNER SHALL SUPPLY WATER AT NO COST. IT WILL BE THE LANDSCAPE CONTRACTOR'S RESPONSIBILITY TO SUPPLY WATER IF THERE IS NONE ON THE SITE.

PLANTING PROCEDURES FOR TREES

I. PREPARING TREE PIT

A. WALLS OF TREE PIT SHALL BE DUG SO THAT THEY ARE VERTICAL AND SCARIFIED.
B. THE TREE PIT MUST BE A MINIMUM OF 9" LARGER ON EVERY SIDE THAN THE BALL OF THE TREE.

C. THE TREE PIT SHALL BE DEEP ENOUGH TO ALLOW 1/8 OF THE BALL TO BE ABOVE THE EXISTING GRADE. ANY LOOSE SOIL AT THE BOTTOM OF THE PIT SHALL BE TAMPED BY HAND OR WITH THE BUCKET OF THE BACKHOE.

II. PLACING TREE IN PIT

A. PLACE THE TREE IN THE PIT EITHER BY LIFTING AND CARRYING THE TREE IN ITS BALL (NEVER LIST BY BRANCHES OR TRUNK) AND THEN LOWERING IT INTO THE PIT.
B. SET THE TREE STRAIGHT AND IN THE CENTER OF THE PIT WITH THE MOST DESIRABLE SIDE OF THE TREE FACING TOWARD THE PROMINENT VIEW (SIDEWALK, BUILDING, STREET, ETC.).

III. BACKFILLING TREE PIT

A. BACKFILL TREE PIT WITH A SOIL MIXTURE STATED IN THE DETAIL.
B. MIX SOIL AMENDMENTS IN MIXTURE EITHER PRIOR TO FILLING PIT OR AS PIT IS BEING FILLED.
C. MAKE SURE PLANT REMAINS STRAIGHT DURING BACKFILLING PROCEDURE.
D. BACKFILL SIDES OF TREE PIT HALFWAY WITH SOIL MIXTURE AND TAMP AS PIT IS BEING FILLED.
E. CUT ROPE OR WIRE ON BALL OF TREE AND PULL BURLAP BACK TO THE EDGE OF THE TREE BALL. REMOVE ALL PLASTIC WRAPS AND TWINE.
F. FINISH BACKFILLING SIDES OF TREE PIT AND TAMP FIRMLY.
G. NEVER COVER TOP OF TREE BALL WITH SOIL.
H. FORM A SAUCER ABOVE EXISTING GRADE AND AROUND THE OUTER RIM OF THE TREE PIT.
I. MULCH TOP OF ROOT BALL AND SAUCER WITHIN 48 HOURS TO A MINIMUM DEPTH OF 2" AND TO A DEPTH NOT TO EXCEED 3".
J. WATER THOROUGHLY ON THE INTERIOR OF THE TREE SAUCER UNTIL IT IS FILLED EVEN IF IT IS RAINING. A SECOND WATERING MAY BE NECESSARY TO INSURE SATURATION OF THE ROOT BALL.
K. PRUNE OUT ANY DEAD OR BROKEN BRANCHES.
L. IN EXTREMELY HOT WEATHER, REDUCE FOLIAGE SURFACE BY PRUNING OR STRIPPING.
M. REMOVE ALL TAGS, LABELS, STRINGS, ETC. FROM THE TREE.

PLANTING PROCEDURES FOR SHRUBS

I. PREPARING SHRUB PIT

A. FOR A SINGLE SHRUB, THE PIT SHALL BE DUG LARGE ENOUGH FOR THE PROPERTY SETTING OF THE ROOT BALL (1 FOOT WIDER THAN ROOT BALL) AND DEEP ENOUGH TO ALLOW 1/8 OF THE ROOT BALL TO SET ABOVE EXISTING GRADE.
B. FOR A SHRUB MASS PLANTING, THE ENTIRE BED AREA SHALL BE ROTOTILLED 3 TO 4 INCHES DEEP. EACH SHRUB PIT SHALL BE EXCAVATED FOR THE PROPER SETTING OF THE ROOT BALL.
C. FOR A HEDGE, A TRENCH SHALL BE DUG LARGE ENOUGH FOR THE PROPER SETTING OF ALL THE PLANTS' ROOT BALLS (THE TRENCH SHALL BE 1 FOOT WIDER THAN THE ROOT BALLS).

II. PLANTING SINGLE SHRUBS AND BACKFILLING POT

A. PLACE THE PLANT IN THE PIT BY LIFTING AND CARRYING IT BY THE ROOT BALL.
B. SET THE PLANT STRAIGHT AND IN THE CENTER OF THE PIT WITH THE MOST DESIRABLE SIDE FACING TOWARD THE PROMINENT VIEW.
C. USE A SOIL MIXTURE AS STATED IN THE DETAIL.
D. MAKE SURE THE PLANT REMAINS STRAIGHT DURING BACKFILLING PROCEDURE.
E. BACKFILL SIDES OF THE PIT HALFWAY UP WITH SOIL MIXTURE AND TAMP AS THE PIT IS BEING FILLED.
F. CUT THE ROPE ON THE BALL OF THE SHRUB AND PULL THE BURLAP BACK TO THE EDGE OF THE PLANT BALL. ALL PLASTIC WRAPS AND TWINE SHALL BE REMOVED. CONTAINERS ARE TO BE REMOVED FROM CONTAINERIZED MATERIALS.
G. FINISH BACKFILLING THE SIDES OF THE SHRUB PIT AND TAMP FIRMLY.
H. FORM A SAUCER ABOVE THE EXISTING GRADE AND AROUND THE PLANTING PIT.
I. MULCH TOP OF ROOT BALL AND SAUCER A MINIMUM OF 2" OF DEPTH, NOT TO EXCEED 3" OF DEPTH.
J. WATER THOROUGHLY ON THE INTERIOR OF THE SHRUB SAUCER UNTIL IT IS FILLED EVEN IF IT IS RAINING.
K. PRUNE OUT ANY DEAD OR BROKEN BRANCHES.
L. REMOVE ALL TAGS, LABELS, STRINGS, ETC. FROM THE PLANT.

III. PLANTING A SHRUB MASS

A. FOLLOW THE SAME PROCEDURE AS FOR A SINGLE SHRUB.
B. EDGE AND RAKE THE ENTIRE PLANTING BED.
C. MULCH THE ENTIRE PLANTING BED A MINIMUM OF 2" OF DEPTH, NOT TO EXCEED 3" OF DEPTH.
D. WATER THE ENTIRE PLANTING BED THOROUGHLY EVEN IF IT IS RAINING.
E. PRUNE OUT ANY DEAD OR BROKEN BRANCHES.
F. REMOVE ALL TAGS, LABELS, STRINGS, ETC. FROM THE PLANT.

6

PLANT SCHEDULE

KEY	QUANT.	BOTANICAL NAME	COMMON NAME	SIZE	REMARKS
Trees					
Ar	4	Acer rubrum	Red Maple	2-1/2" cal.	B&B
Cp	3	Crataegus phaenopyrum	Washington Hawthorn	2-1/2" cal.	B&B
Shrubs					
Ag	37	Abelia grandifolia	Glossy Abelia	2 gal.	CONTAINER
Ea	26	Euonymus alatus	Winged Euonymus	2 gal.	CONTAINER
Ig	7	Ilex glabra	Inkberry	2 gal.	CONTAINER
Sj	16	Spireae japonica 'Little Princess'	Japanese Spirea	2 gal.	CONTAINER
To	13	Thuja occidentalis 'Nigra'	Dark Green Arborvitae	5' ht.	B&B
Vd	18	Viburnum dentatum	Arrowwood Viburnum	2 gal.	CONTAINER

TRIAD ENGINEERING, INC.
1097 CHAPLIN ROAD
MORGANTOWN, WV 26501
PH: 304.296.2562 FAX: 304.296.8739
OFFICE LOCATIONS
MARYLAND - PENNSYLVANIA - VIRGINIA
WEST VIRGINIA - OHIO

REV. #	DATE	DESCRIPTION	BY
6	08/18/2026	UPDATED TO LARGER SHADE TREE	

CADD FILE: C-01 Cover Sheet.DWG
DRAWN BY: RDB
CHECKED BY: WME
DATE: 06-19-2026
SCALE: AS SHOWN

7/14/2026

SHEETZ STORE REBUILD - #62
FROSTBURG, MARYLAND

LANDSCAPE NOTES AND DETAILS

TRIAD ENGINEERING, INC.
www.triadeng.com

SHEET NUMBER:
C-08
JOB NO.: 01-24-0390

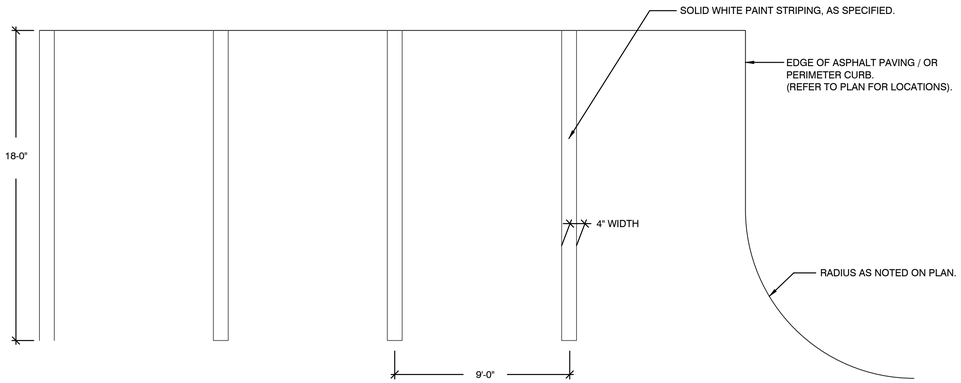

PARKING LOT STRIPING DETAIL
NOT TO SCALE

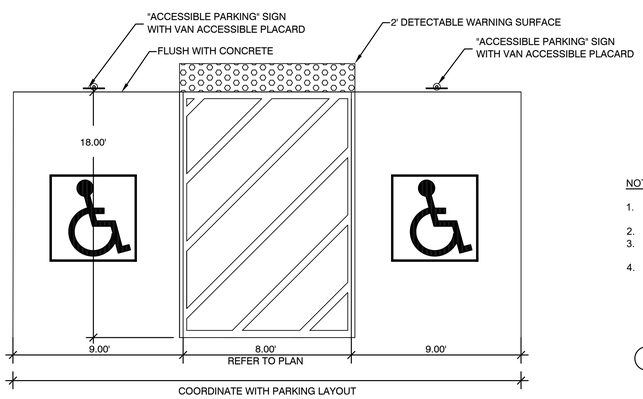

NOTES:
1. PAVEMENT MARKINGS TO CONFORM TO ADA STANDARDS 502.3.3 MARKING AND REQUIREMENTS BY STATE AND LOCAL LAWS AND REGULATIONS.
2. PAVEMENT MARKINGS TO BE PAINTED BLUE WITH HIGHWAY GRADE PAINT.

ACCESSIBLE PARKING DETAIL
NOT TO SCALE

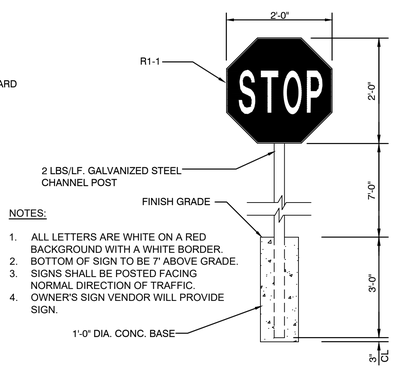

NOTES:
1. ALL LETTERS ARE WHITE ON A RED BACKGROUND WITH A WHITE BORDER.
2. BOTTOM OF SIGN TO BE 7' ABOVE GRADE.
3. SIGNS SHALL BE POSTED FACING NORMAL DIRECTION OF TRAFFIC.
4. OWNER'S SIGN VENDOR WILL PROVIDE SIGN.

STOP SIGN INSTALLATION
NOT TO SCALE

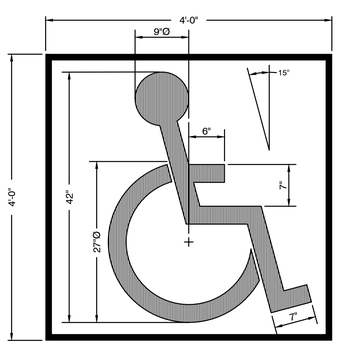

INTERNATIONAL SYMBOL OF ACCESSIBILITY PER ANSI A117.1-2009 REQUIREMENTS

NOTES:
1. PAVEMENT MARKINGS TO CONFORM TO ADA STANDARDS 502.3.3 MARKING AND REQUIREMENTS BY STATE AND LOCAL LAWS AND REGULATIONS.
2. PAVEMENT MARKINGS TO BE PAINTED BLUE WITH HIGHWAY GRADE PAINT.

PAINTED ACCESSIBLE PARKING SYMBOL
NOT TO SCALE

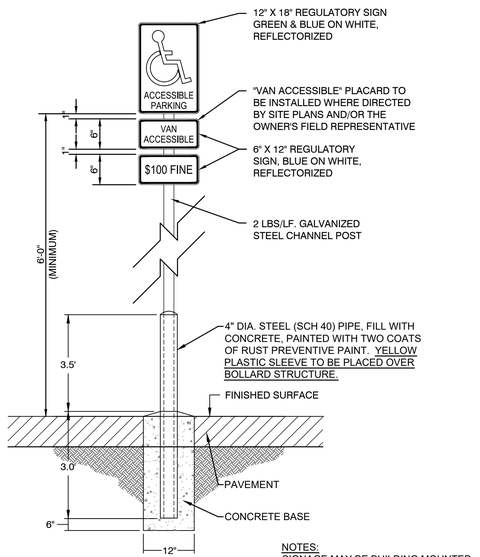

NOTES:
SIGNAGE MAY BE BUILDING MOUNTED PER APPROVAL BY OWNER/ARCHITECT

BOLLARD MOUNTED ACCESSIBLE SIGN DETAIL
NOT TO SCALE

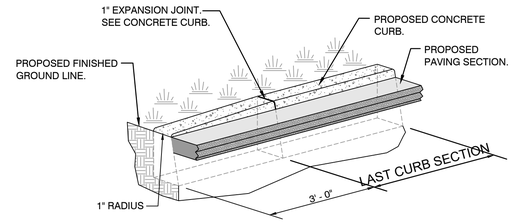

CONCRETE CURB NOSE DOWN DETAIL
NOT TO SCALE

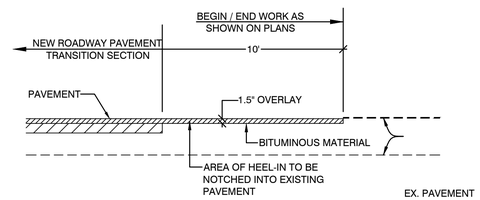

HEEL-IN DETAIL
NOT TO SCALE

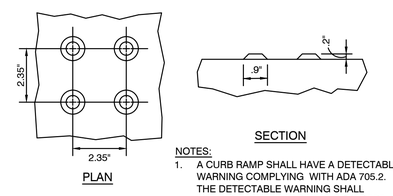

NOTES:
1. A CURB RAMP SHALL HAVE A DETECTABLE WARNING COMPLYING WITH ADA 705.2. THE DETECTABLE WARNING SHALL EXTEND THE FULL WIDTH AND 24" DEPTH OF THE CURB RAMP.
2. ALL TRUNCATED DOME SIDEWALKS COLOR SHALL BE COMPLIANT WITH ADA LATEST STANDARDS.

TRUNCATED DOME DETAIL
NOT TO SCALE

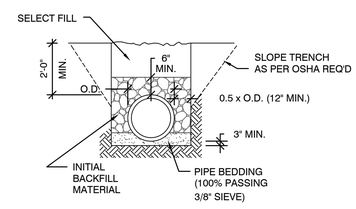

NOTES:
1. BEDDING SHALL BE COMPACTED CRUSHED STONE SHAPED TO THE BOTTOM OF THE PIPE.
2. SELECT FILL SHALL BE NATIVE MATERIAL FREE OF LARGE ROCKS, DEBRIS, ORGANICS AND PLACED IN 6" MAX. LOOSE LIFTS AND COMPACTED TO 95% STANDARD PROCTOR.
3. HAUNCHING AND INITIAL MATERIAL SHALL BE COMPACTED MATERIAL OF CLASS I OR II (WVDOH) GRANULAR TO 95% STANDARD PROCTOR.

TYPICAL PIPE BEDDING
NOT TO SCALE

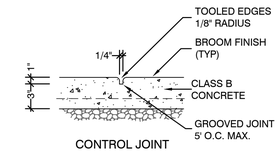

CONTROL JOINT

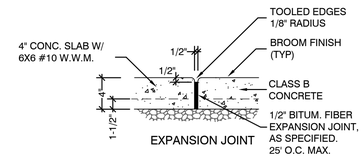

EXPANSION JOINT

NOTES:
ALSO PROVIDE EXPANSION JOINTS WHERE SIDEWALK ABUTS STRUCTURE OR OTHER SIDEWALK.

SIDEWALK JOINT DETAILS
NOT TO SCALE

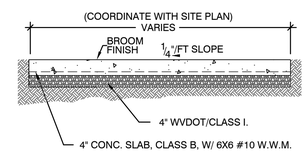

NOTE:
SIDEWALKS SHALL BE 4" MIN THICKNESS W/ 4" COMPACTED CRUSHED STONE BASE.

NOTES:
REFER TO SHEETZ ARCHITECTURALS FOR SIDEWALK DETAIL/SURFACE TREATMENT BEYOND WHAT IS SHOWN HERE.

SITE SIDEWALK (STANDARD PLAIN CONCRETE)
NOT TO SCALE

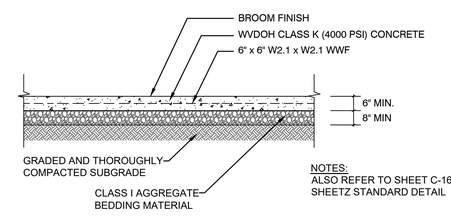

NOTES:
ALSO REFER TO SHEET C-16 FOR SHEETZ STANDARD DETAIL

DUMPSTER PAD DETAIL
NOT TO SCALE

TRIAD ENGINEERING, INC.
1097 CHAPLIN ROAD
MORGANTOWN, WV 26501
PH: 304.296.2562 FAX: 304.296.8739
OFFICE LOCATIONS
MARYLAND • PENNSYLVANIA • VIRGINIA
WEST VIRGINIA • OHIO

REV #	DATE	DESCRIPTION	BY

CADD FILE: C-01 Cover Sheet.DWG	CHECKED BY: WME	SCALE: AS SHOWN
DRAWN BY: RDB		DATE: 06-19-2026

7/14/2026

SHEETZ STORE REBUILD - #62
FROSTBURG, MARYLAND

CONSTRUCTION DETAILS

TRIAD ENGINEERING, INC.
www.triadeng.com

SHEET NUMBER:
C-09
JOB NO.: 01-24-0390

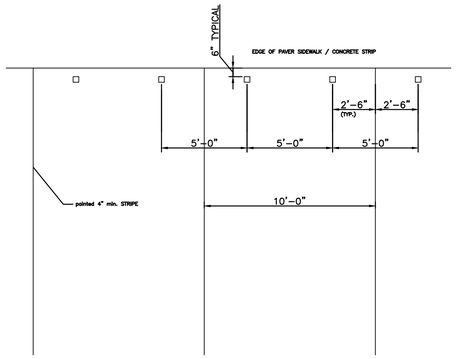

BUMPER POST LAYOUT
SCALE: NO SCALE

* 2'-3" FOR 9.5' WIDE PARKING SPACE
2'-6" FOR 9.0' WIDE PARKING SPACE

USE THIS DETAIL IF PAVEMENT IS PAVED UP TO TOP OF SIDEWALK

Convenience Architecture and Design P.C. 351 Sheetz Way, Claysburg, PA 16625 (814)239-6013	BUMPERPOST LAYOUT DETAIL AT PAVER SIDEWALK	SCALE: AS NOTED DATE: 02-12-14 DRAWN BY: VAE FILENAME: DETAIL H	08

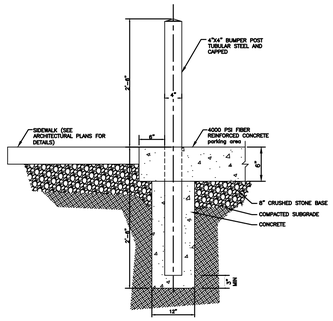

STOREFRONT BUMPER POST FLUSH SIDEWALK
SCALE: NO SCALE

Convenience Architecture and Design P.C. 351 Sheetz Way, Claysburg, PA 16625 (814)239-6013	STOREFRONT BUMPER POST DETAIL	SCALE: AS NOTED DATE: 07/23/2021 DRAWN BY: DAH FILENAME: C-15 Construction Details	01

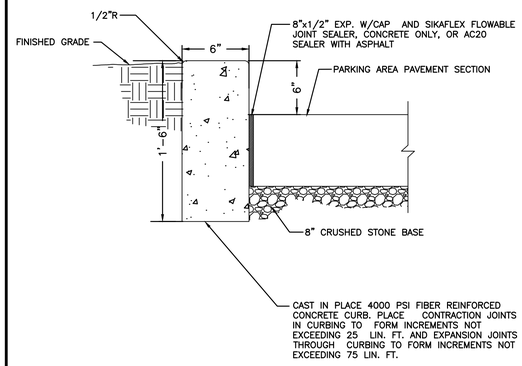

SITE AND STORE PERIMETER CURBING
SCALE: NO SCALE

Convenience Architecture and Design P.C. 351 Sheetz Way, Claysburg, PA 16625 (814)239-6013	SITE AND STORE PERIMETER CURBING	SCALE: AS NOTED DATE: 8/28/2019 DRAWN BY: DAH FILENAME: DETAIL C	03

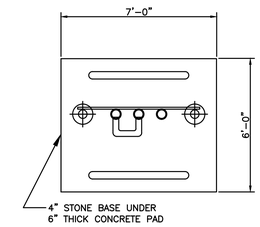

UST VENT PAD
SCALE: NO SCALE

Convenience Architecture and Design P.C. 351 Sheetz Way, Claysburg, PA 16625 (814)239-6013	UST VENT PAD DETAILS	SCALE: AS NOTED DATE: 02-06-14 DRAWN BY: VAE FILENAME: DETAIL B	04

AIR MACHINE PAD NOTES:
ELECTRICAL NEEDS ARE A 120-VAC 30-AMP #10 WIRE CIRCUITS WITH GROUND

POWER CONDUIT FROM BUILDING TO AIR MACHINE IS TO BE RIGID PVC WITH FIRST AND LAST 10' IN RIGID METAL CONDUIT AND EYS FITTINGS AT BOTH ENDS. TERMINATED IN RECESSED 6" PVC SLEEVE UNDER AIR MACHINE.

USE WEDGE ANCHOR BOLTS TO MOUNT AIR STAND.

BOLLARDS ARE 4" X 4" X 5'. TO BE PAINTED DARK BRONZE.

maximum distance from final grade to top button on air machine to be 48"

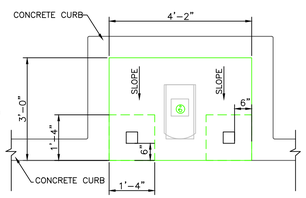

PLAN VIEW

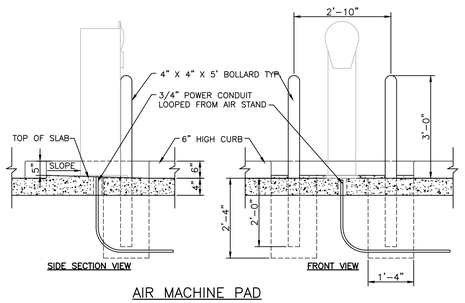

SIDE SECTION VIEW
FRONT VIEW

AIR MACHINE PAD
SCALE: NO SCALE

Convenience Architecture and Design P.C. 351 Sheetz Way, Claysburg, PA 16625 (814)239-6013	AIR MACHINE PAD DETAILS	SCALE: AS NOTED DATE: 6-19-17 DRAWN BY: VAE FILENAME: DETAIL E	05

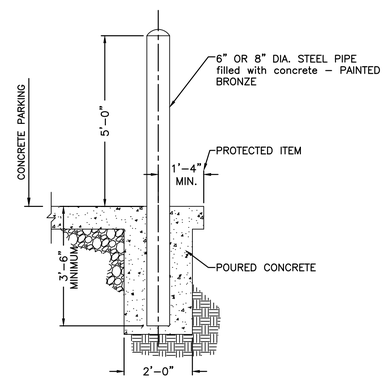

6" OR 8" DIAMETER PIPE BOLLARD
SCALE: NO SCALE

Convenience Architecture and Design P.C. 351 Sheetz Way, Claysburg, PA 16625 (814)239-6013	6" OR 8" PIPE BOLLARD	SCALE: AS NOTED DATE: 05/27/2021 DRAWN BY: DAH FILENAME: DETAIL G	17

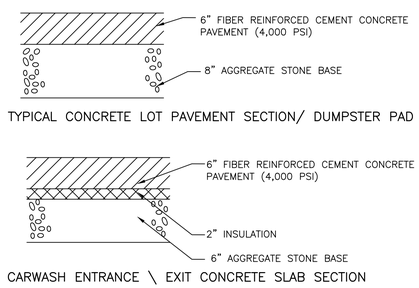

SITE PAVEMENT DETAILS
SCALE: NO SCALE

Convenience Architecture and Design P.C. 351 Sheetz Way, Claysburg, PA 16625 (814)239-6013	SITE PAVEMENT DETAILS	SCALE: AS NOTED DATE: 8/27/2019 DRAWN BY: DAH FILENAME: DETAIL F	20

TRIAD ENGINEERING, INC.
1097 CHAPLIN ROAD
MORGANTOWN, WV 26501
PH: 304.296.2562 FAX: 304.296.8739

OFFICE LOCATIONS
MARYLAND • PENNSYLVANIA • VIRGINIA
WEST VIRGINIA • OHIO

REV. #	DATE	DESCRIPTION	BY

CADD FILE: C-01 Cover Sheet.DWG
DRAWN BY: RDB
CHECKED BY: WME
DATE: 06-19-2026
SCALE: AS SHOWN

7/14/2026

SHEETZ STORE REBUILD - #62
FROSTBURG, MARYLAND

SHEETZ STANDARD CONSTRUCTION DETAILS

TRIAD ENGINEERING, INC.
www.triadeng.com

SHEET NUMBER:
C-10
JOB NO.: 01-24-0390

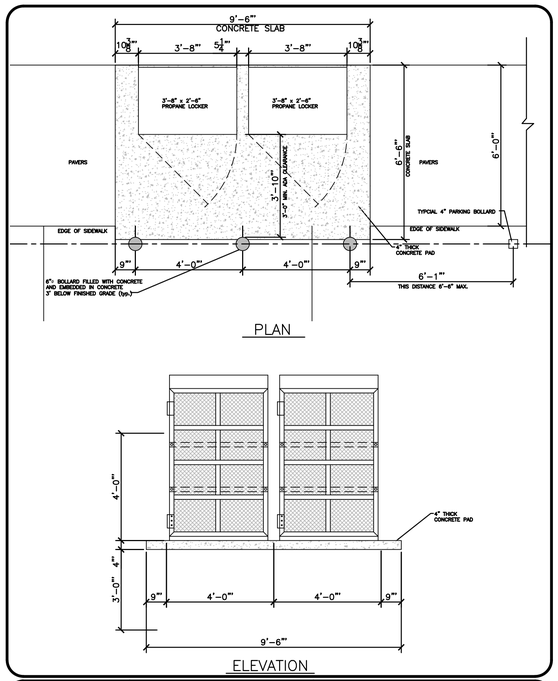

DATE	BY	DESCRIPTION
REVISIONS		

Convenience Architecture and Design P.C.
351 Sheetz Way, Claysburg, PA 16625 (814)239-6013

PROPANE LOCKER AT BUILDING

SCALE: 1/4" = 1'-0"
DATE: 11-10-14
DRAWN BY: NM
FILENAME: DETAIL-1-propane
19

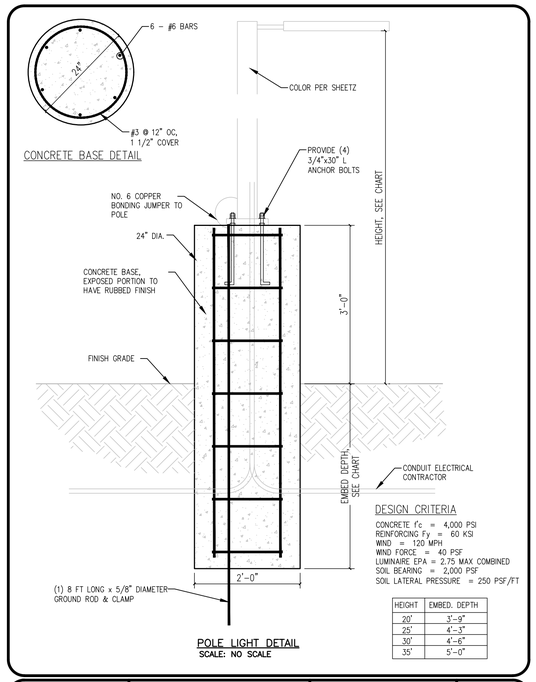

DESIGN CRITERIA
CONCRETE f'c = 4,000 PSI
REINFORCING Fy = 60 KSI
WIND = 120 MPH
WIND FORCE = 40 PSF
LUMINAIRE EPA = 2.75 MAX COMBINED
SOIL BEARING = 2,000 PSF
SOIL LATERAL PRESSURE = 250 PSF/FT

HEIGHT	EMBED. DEPTH
20'	3'-9"
25'	4'-3"
30'	4'-6"
35'	5'-0"

POLE LIGHT DETAIL
SCALE: NO SCALE

DATE	BY	DESCRIPTION
REVISIONS		

Convenience Architecture and Design P.C.
351 Sheetz Way, Claysburg, PA 16625 (814)239-6013

POLE LIGHT DETAIL

SCALE: AS NOTED
DATE: 2/19/2021
DRAWN BY: DAH
FILENAME: DETAIL 1
33

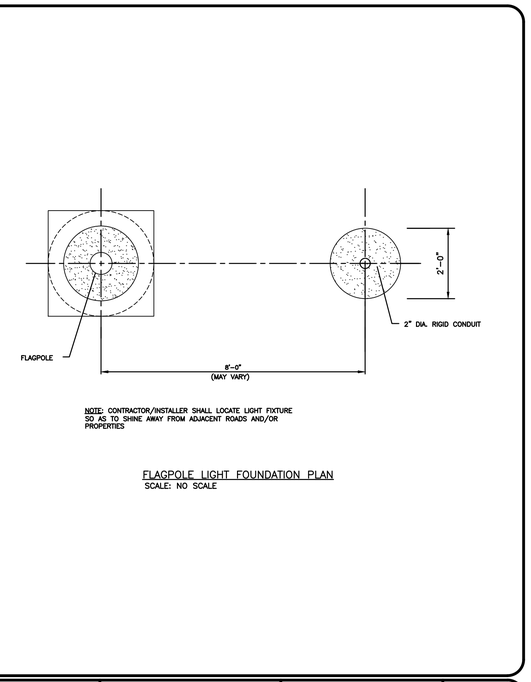

NOTE: CONTRACTOR/INSTALLER SHALL LOCATE LIGHT FIXTURE SO AS TO SHINE AWAY FROM ADJACENT ROADS AND/OR PROPERTIES

FLAGPOLE LIGHT FOUNDATION PLAN
SCALE: NO SCALE

DATE	BY	DESCRIPTION
REVISIONS		

Convenience Architecture and Design P.C.
351 Sheetz Way, Claysburg, PA 16625 (814)239-6013

FLAGPOLE AND LIGHT FOUNDATION LAYOUT PLAN

SCALE: AS NOTED
DATE: 03-29-17
DRAWN BY: NM
FILENAME: DETAIL 14
14

LEGEND

POLE HEIGHT	SLEEVE SIZE	A	B	COLLAR BASE SIZE
40'	12" DIA.	48"	24" DIA.	18" DIA.
35'	10" DIA.	42"	22" DIA.	12" DIA.

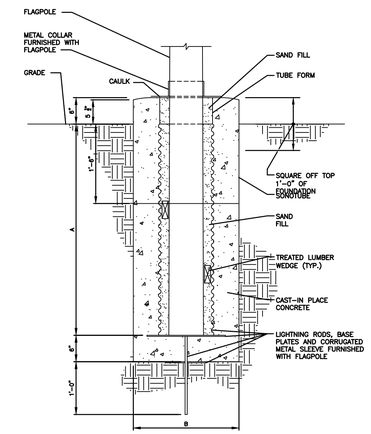

FLAGPOLE FOUNDATION
SCALE: NO SCALE

DATE	BY	DESCRIPTION
REVISIONS		

Convenience Architecture and Design P.C.
351 Sheetz Way, Claysburg, PA 16625 (814)239-6013

FLAGPOLE FOUNDATION

SCALE: AS NOTED
DATE: 03-29-17
DRAWN BY: NM
FILENAME: DETAIL L
12

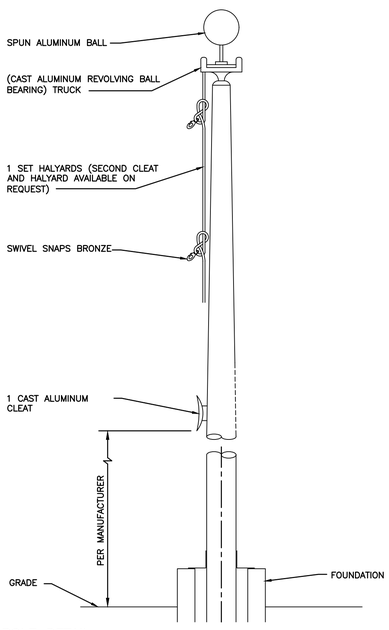

FLAGPOLE DETAIL
SCALE: NO SCALE

DATE	BY	DESCRIPTION
REVISIONS		

Convenience Architecture and Design P.C.
351 Sheetz Way, Claysburg, PA 16625 (814)239-6013

FLAGPOLE DETAIL

SCALE: AS NOTED
DATE: 3-24-17
DRAWN BY: NM
FILENAME: DETAIL 4
11

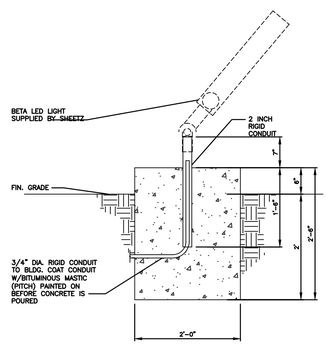

FLAGPOLE LIGHT FOUNDATION
SCALE: NO SCALE

DATE	BY	DESCRIPTION
REVISIONS		

Convenience Architecture and Design P.C.
351 Sheetz Way, Claysburg, PA 16625 (814)239-6013

FLAGPOLE LIGHT FOUNDATION

SCALE: AS NOTED
DATE: 03-29-17
DRAWN BY: NM
FILENAME: DETAIL M
13

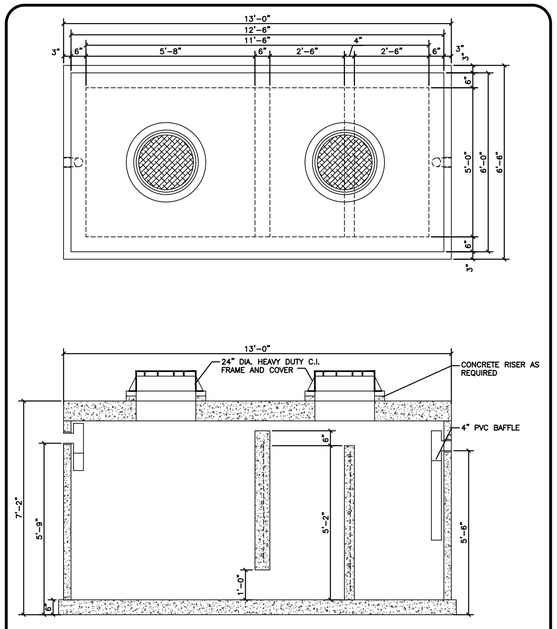

PRECAST CONCRETE 2000 GALLON GREASE INTERCEPTOR
SCALE: NO SCALE

DATE	BY	DESCRIPTION
REVISIONS		

Convenience Architecture and Design P.C.
351 Sheetz Way, Claysburg, PA 16625 (814)239-6013

2000 GALLON PRECAST CONCRETE GREASE INTERCEPTOR

SCALE: AS NOTED
DATE: 02-11-19
DRAWN BY: NM
FILENAME: DETAIL -CC
21

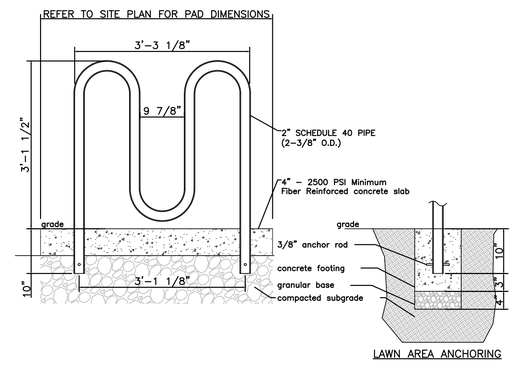

bike rack
SCALE: NO SCALE

DATE	BY	DESCRIPTION
REVISIONS		

SHEETZ

BIKE RACK

SCALE:
DATE: 11/10/2023
DRAWN BY: DAH
23

TRIAD ENGINEERING, INC.
1097 CHAPLIN ROAD
MORGANTOWN, WV 26501
PH: 304.296.2562 FAX: 304.296.8739

OFFICE LOCATIONS
MARYLAND • PENNSYLVANIA • VIRGINIA
WEST VIRGINIA • OHIO

REV. #	DATE	DESCRIPTION	BY
2	08/18/2026	ADDED BICYCLE PARKING	

CADD FILE: C-01 Cover Sheet.DWG
DRAWN BY: RDB
CHECKED BY: WME
DATE: 06-19-2026
SCALE: AS SHOWN

7/14/2026

SHEETZ STORE REBUILD - #62
FROSTBURG, MARYLAND

SHEETZ STANDARD CONSTRUCTION DETAILS

TRIAD ENGINEERING, INC.
www.triadeng.com

SHEET NUMBER:
C-11
JOB NO.: 01-24-0390

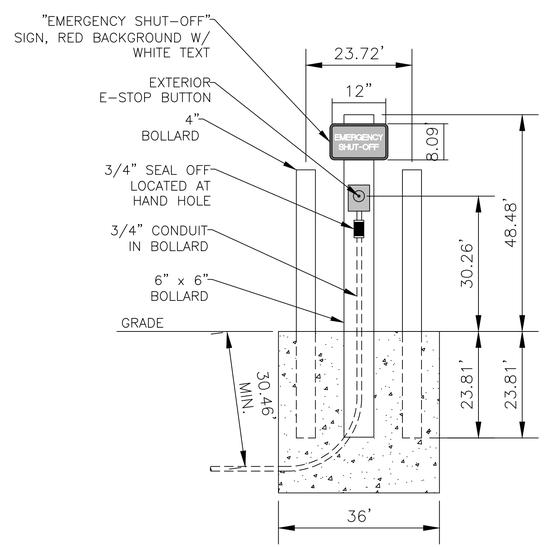

FRONT VIEW
N.T.S.

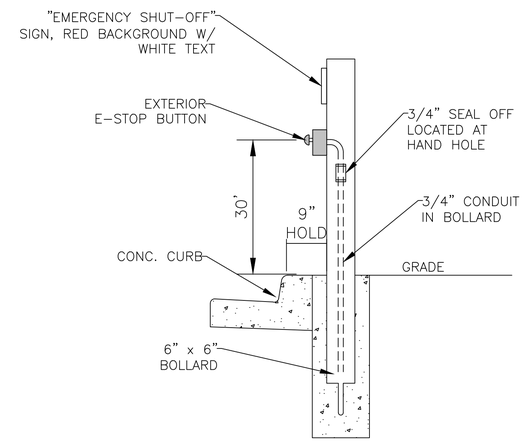

SIDE VIEW
N.T.S.

DATE	BY	DESCRIPTION

REVISIONS

Convenience Architecture and Design P.C.
351 Sheetz Way, Claysburg, PA 16625 (814)239-6013

E-STOP STANDARD DETAIL

SCALE:	AS SHOWN
DATE:	8/25/2020
DRAWN BY:	DAH
FILENAME:	E-STOP

TRIAD ENGINEERING, INC.
1097 CHAPLIN ROAD
MORGANTOWN, WV 26501
PH: 304.296.2562 FAX: 304.296.8739
OFFICE LOCATIONS
MARYLAND, PENNSYLVANIA, VIRGINIA
WEST VIRGINIA, OHIO

REV #	DATE	DESCRIPTION	BY

CADD FILE: C-01 Cover Sheet.DWG	
DRAWN BY: RDB	CHECKED BY: WME
DATE: 06-19-2026	SCALE: AS SHOWN

7/14/2026

SHEETZ STORE REBUILD - #62
FROSTBURG, MARYLAND

SHEETZ STANDARD CONSTRUCTION DETAILS

TRIAD ENGINEERING, INC.
www.triadeng.com

SHEET NUMBER:
C-12
JOB NO.: 01-24-0390

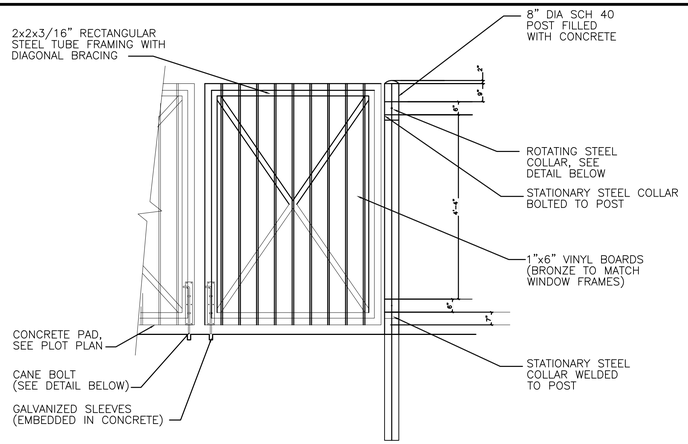

GATE AND POST DETAIL

FOR QUANTITIES OF GATES AND POSTS SEE PLOT PLAN

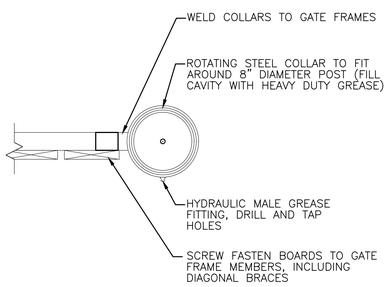

HINGE/COLLAR DETAIL

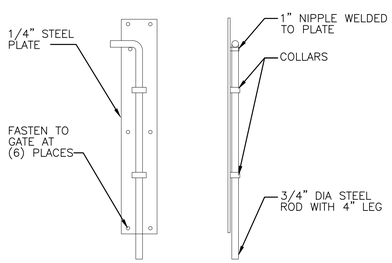

CANE BOLT DETAIL

DUMPSTER GATE DETAILS

SCALE: NOT TO SCALE

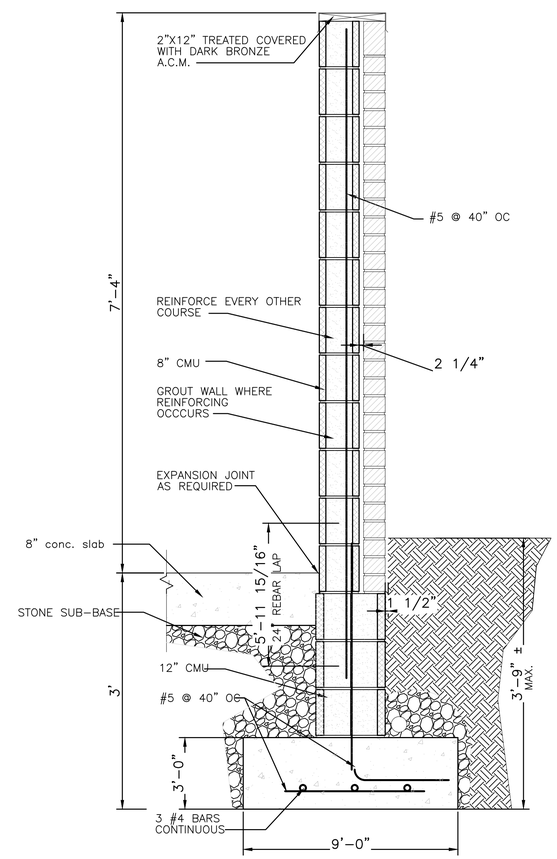

SECTION DETAIL

SCALE: 1" = 1'-0"

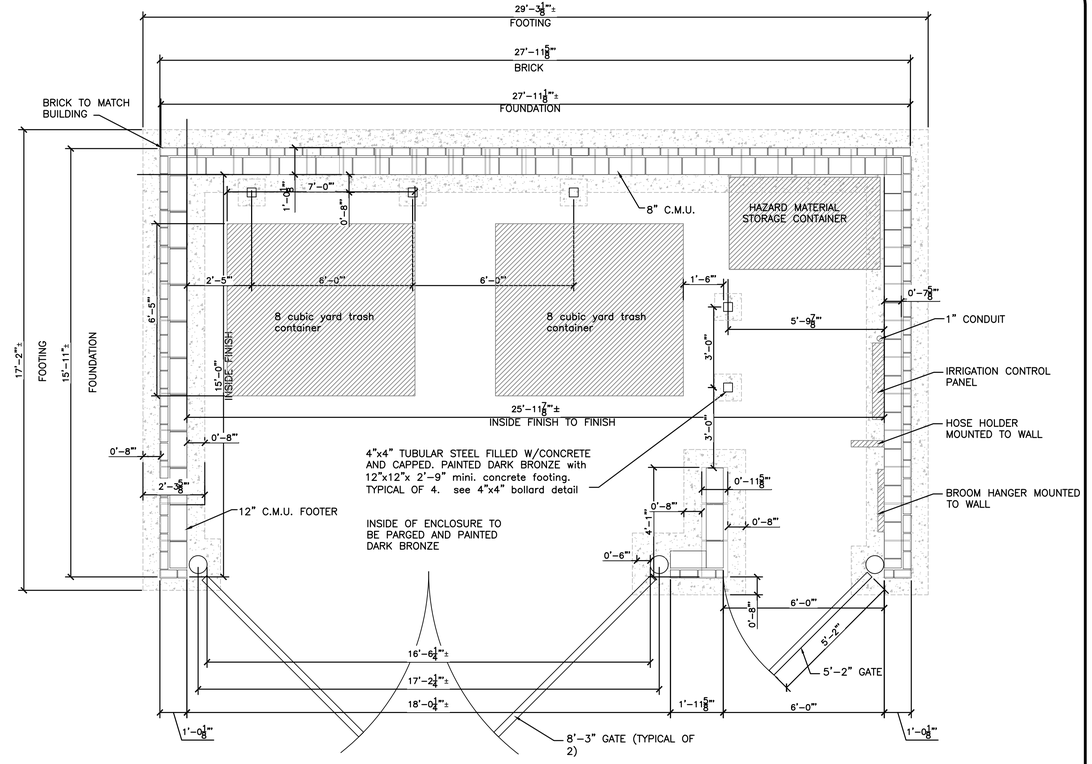

PLAN VIEW

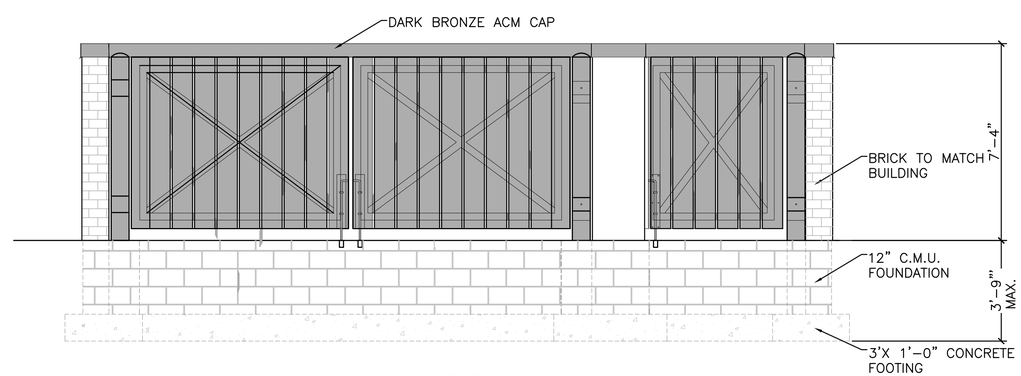

ELEVATION VIEW

DUMPSTER ENCLOSURE

SCALE: 3/8" = 1'-0"

DATE	BY	DESCRIPTION

REVISIONS

Convenience Architecture and Design P.C.
351 Sheetz Way, Claysburg, PA 16625 (814)239-6013

TRASH ENCLOSURE DETAIL AWAY FROM BUILDING RIGHT HAND

SCALE:	AS SHOWN
DATE:	2-13-14
DRAWN BY:	NMI
FILENAME:	TRASH

TRIAD ENGINEERING, INC.
1097 CHAPLIN ROAD
MORGANTOWN, WV 26501
PH: 304.296.2562 FAX: 304.296.8739
OFFICE LOCATIONS
MARYLAND • PENNSYLVANIA • VIRGINIA
WEST VIRGINIA • OHIO

REV #	DATE	DESCRIPTION	BY

CADD FILE: C-01 Cover Sheet.DWG		
DRAWN BY: RDB	CHECKED BY: WME	
DATE: 06-19-2026	SCALE: AS SHOWN	

7/14/2026

SHEETZ STORE REBUILD - #62
FROSTBURG, MARYLAND

SHEETZ STANDARD CONSTRUCTION DETAILS

TRIAD ENGINEERING, INC.
www.triadeng.com

SHEET NUMBER:
C-13

JOB NO.: 01-24-0390

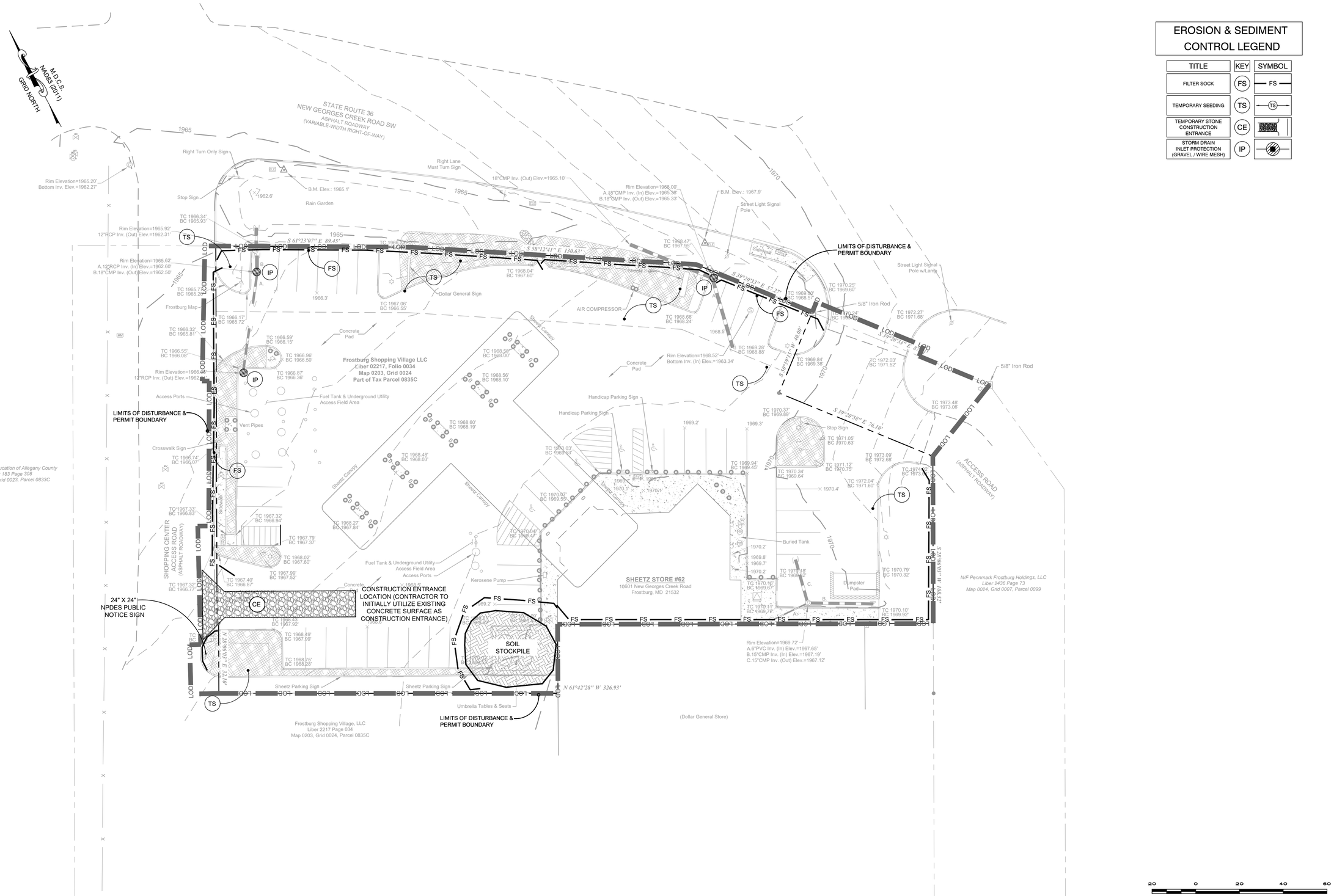

EROSION & SEDIMENT CONTROL LEGEND

TITLE	KEY	SYMBOL
FILTER SOCK	FS	FS
TEMPORARY SEEDING	TS	TS
TEMPORARY STONE CONSTRUCTION ENTRANCE	CE	
STORM DRAIN INLET PROTECTION (GRAVEL / WIRE MESH)	IP	

THIS SHEET IS FOR EROSION & SEDIMENT CONTROL PURPOSES ONLY!

TRIAD ENGINEERING, INC.
1097 CHAPLIN ROAD
MORGANTOWN, WV 26501
PH: 304.296.2562 FAX: 304.296.8739
OFFICE LOCATIONS
MARYLAND • PENNSYLVANIA • VIRGINIA
WEST VIRGINIA • OHIO

REV. #	DATE	DESCRIPTION	BY

CADD FILE: C-01 Cover Sheet.DWG
DRAWN BY: RDB
CHECKED BY: WME
DATE: 06-19-2026
SCALE: AS SHOWN

7/14/2026

SHEETZ STORE REBUILD - #62
FROSTBURG, MARYLAND

EROSION AND SEDIMENT CONTROL PLAN - PHASE I PLAN

TRIAD ENGINEERING, INC.
www.triadeng.com

SHEET NUMBER:
ENS-1
JOB NO.: 01-24-0390

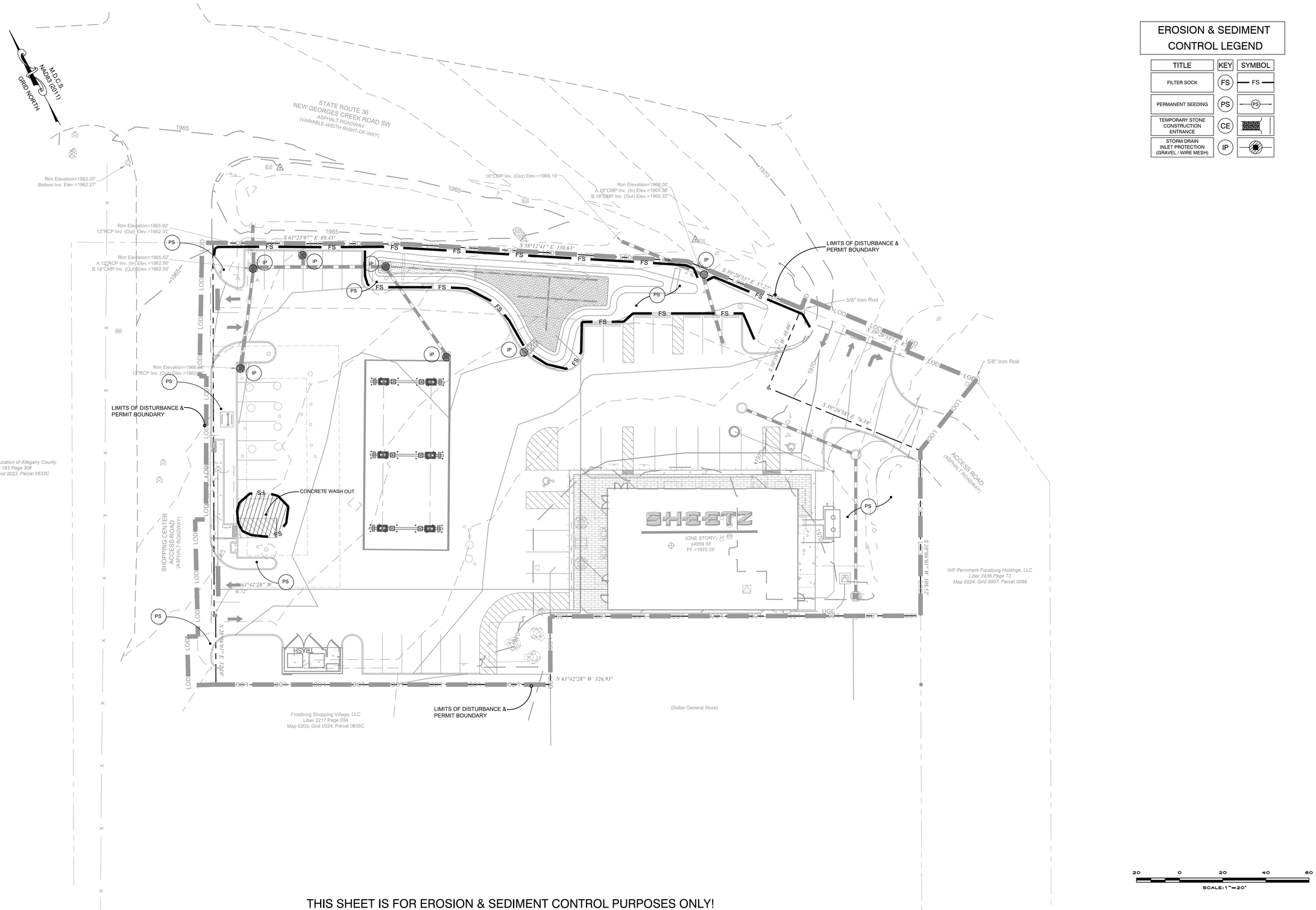

EROSION & SEDIMENT CONTROL LEGEND

TITLE	KEY	SYMBOL
FILTER SOCK	FS	FS
PERMANENT SEEDING	PS	PS
TEMPORARY STONE CONSTRUCTION ENTRANCE	CE	
STORM DRAIN INLET PROTECTION (GRAVEL / WIRE MESH)	IP	

THIS SHEET IS FOR EROSION & SEDIMENT CONTROL PURPOSES ONLY!

TRIAD ENGINEERING, INC.
1097 CHAPLIN ROAD
MORGANTOWN, WV 26501
PH: 304.296.2562 FAX: 304.296.8739

OFFICE LOCATIONS
MARYLAND, PENNSYLVANIA, VIRGINIA
WEST VIRGINIA, OHIO

REV. #	DATE	DESCRIPTION	BY

CADD FILE: C-01 Cover Sheet.DWG
DRAWN BY: RDB
CHECKED BY: WME
DATE: 06-19-2026
SCALE: AS SHOWN

7/14/2026

SHEETZ STORE REBUILD - #62
FROSTBURG, MARYLAND

EROSION AND SEDIMENT CONTROL PLAN - PHASE II PLAN

TRIAD ENGINEERING, INC.
www.triadeng.com

SHEET NUMBER:
ENS-2
JOB NO.: 01-24-0390

EROSION & SEDIMENT CONTROL NARRATIVE

PROJECT DESCRIPTION
PROPOSED DEVELOPMENT CONSISTS OF DEMOLITION AND CONSTRUCTION OF A NEW SHEETZ CONVENIENCE STORE IN FROSTBURG, MARYLAND. THE SITE WILL BE DESIGNED WITH RELATED PARKING AREAS, BUILDING, FUEL PUMPS, DUMPSTER PAD, AND STORMWATER STRUCTURES. THE SITE IS LOCATED WITH THE LIMITS OF THE CITY OF FROSTBURG, IN ALLEGANY COUNTY, MARYLAND. THE SITE WILL HAVE INGRESS AND EGRESS FROM EXISTING SHOPPING PLAZA ACCESS ROAD THAT INTERSECTS WITH NEW GEORGES CREEK RD SW. THE PROJECT SITE WILL DISTURB APPROXIMATELY ±1.37 ACRES LOD DURING CONSTRUCTION.

SEDIMENT CONTROL FOR THE PROPOSED CONSTRUCTION ACTIVITIES WILL BE IN ACCORDANCE WITH THE POLICIES AND REQUIREMENTS OF 2011 MD STANDARD AND SPECIFICATIONS FOR SOIL EROSION AND SEDIMENT CONTROL AVAILABLE ON THE MARYLAND DEPARTMENT OF THE ENVIRONMENT WEBSITE:
https://mde.maryland.gov/programs/water/StormwaterManagementProgram/Pages/erosionsedimentcontrol.aspx

EXISTING SITE CONDITIONS
THE SITE IS AN EXISTING SHEETZ STORE WITH FUEL ISLANDS AND PARKING AREA.

ADJACENT AREAS
THE SITE IS SURROUNDED ON ALL SIDES BY COMMERCIAL DEVELOPMENT..

EROSION CONTROL PROGRAM
EROSION CONTROL ASSOCIATED WITH THIS PROJECT WILL REQUIRE A MULTI-PHASED E&S CONTROL PLAN. REFER TO 2011 MD STANDARD AND SPECIFICATIONS FOR SOIL EROSION AND SEDIMENT CONTROL MANUAL AND SEEDING NOTES ON THIS SHEET. PERMANENT COVER SHOULD BE PROVIDED OVER ALL DISTURBED AREAS AS SOON AS POSSIBLE UPON ACHIEVING FINAL GRADE, BY MEANS OF SEEDING AND MULCHING, SODDING AND PEGGING, PAVING, OR AS OTHERWISE DIRECTED BY THE PLAN. STOCKPILE FOR TOPSOIL SHALL BE ORGANIZED IN LOCATION SPECIFIED ON PLANS.

STRUCTURAL PRACTICES
1. STABILIZED CONSTRUCTION ENTRANCE (SCE)
2. AT-GRADE INLET PROTECTION (AGIP)
3. FILTER SOCK (FS)

VEGETATIVE PRACTICES
THE CONTRACTOR SHALL VEGETATE ALL DISTURBED AREAS UNLESS THE ENGINEER DIRECTS OTHERWISE, AS FOLLOWS:
1. EVENLY APPLY AGRICULTURAL GRADE GROUND LIMESTONE (CALCIUM CARBONATE EQUIVALENT BASIS) AT APPROXIMATELY 2 TONS PER ACRE TO REACH PH OF 6.5 AND 10-20-20 FERTILIZER @ 436 POUNDS PER ACRE.
2. ACROSS SLOPES, TRACK UP AND DOWN SLOPES WITH A BULLDOZER AND HYDROSEED ALL MATERIALS. IF RAIN HAS TAKEN PLACE AND SOIL CRUSTING HAS TAKEN PLACE OR THE SOILS HAVE BECOME COMPACTED BETWEEN INCORPORATION OF LIME AND FERTILIZER AND THE TIME OF SEEDING, PREPARE SEEDBED BY TRACKING OR TILLAGE JUST BEFORE SEEDING.
3. MULCH WITH STRAW AT RATE 2 TONS PER ACRE.

PREPARATION
1. SURFACE ROUGHENING - AREAS TO BE SEEDED SHALL BE LIGHTLY ROUGHENED AND LOOSE TO A DEPTH OF 3" TO 5" PRIOR TO SEEDING. AREAS, WHICH HAVE BEEN GRADED AND WILL NOT BE STABILIZED IMMEDIATELY, MAY BE ROUGHENED TO REDUCE VELOCITY UNTIL SEEDING TAKES PLACE
2. TOPSOILING (STOCKPILES) - SEE PLAN
3. TEMPORARY SEEDING - ALL DENUDED AREAS THAT WILL BE LEFT DORMANT FOR EXTENDED PERIODS OF TIME SHALL BE SEEDED WITH FAST GERMINATING TEMPORARY VEGETATION IMMEDIATELY FOLLOWING GRADING. SELECTION OF THE SEED MIXTURE WILL DEPEND ON THE TIME OF THE YEAR IT IS APPLIED. FOR MORE DETAILS ON SEED MIXTURE REFER TO 2011 MD STANDARD AND SPECIFICATIONS FOR SOIL EROSION AND SEDIMENT CONTROL.
4. SOD - PRIOR TO THE LAYING OF SOD, THE SOIL SURFACE SHALL BE CLEAR OF TRASH, DEBRIS, LARGE ROOTS, BRANCHES, STONES, AND CLODS LARGER THAN 1 INCH IN LENGTH OR DIAMETER.
5. PERMANENT STABILIZATION - ALL OPEN SPACE AREAS DISTURBED BY CONSTRUCTION SHALL BE STABILIZED WITH SOD OR PERMANENT SEEDING AS LABELED ON THE PLANS IMMEDIATELY FOLLOWING FINISHED GRADING. SEEDING SHALL BE DONE WITH THE MIXTURE IDENTIFIED BELOW IN TABLE 2. MULCH (STRAW OR FIBER) WILL BE USED. IN ALL SEEDING OPERATIONS, SEED, FERTILIZER AND LIME WILL BE APPLIED PRIOR TO MULCHING. SODDING SHALL BE DONE WITH VARIETIES IN THE TABLES BELOW. IN ALL SODDING OPERATIONS, FERTILIZER AND LIME WILL BE APPLIED PRIOR TO SOD INSTALLATION.

TABLE 1

TEMPORARY SEEDING SUMMARY						
HARDINESS ZONE (FROM FIGURE B.3) 6b SEED MIXTURE (FROM TABLE B.1)						
No.	SPECIES	APPLICATION RATE (LB / AC.)	SEEDING DATES	SEEDING DEPTHS (inches)	FERTILIZER RATE (10-20-20)	LIME RATE
	BARLEY (HORDEUM VULGARE)	96 lb/ac. 2.2 lb/1000 s.f.	MAR. 1 - MAY 15 AUG. 1 - OCT. 15	1.0	436 lb./ac. (10 lb./1,000 sq.ft.)	2 tons/ac. (90 lb./1,000 sq.ft.)

TABLE 2

PERMANENT SEEDING SUMMARY								
HARDINESS ZONE (FROM FIGURE B.3) 6-b SEED MIXTURE (FROM TABLE B.3)					FERTILIZER RATE (10-20-20)			LIME RATE
No.	SPECIES	APPLICATION RATE (LB / AC.)	SEEDING DATES	SEEDING DEPTHS (inches)	N	P205	K20	
	FALL FESCUE (85%)	40	MAR. 1-MAY 15 AUG. 1-OCT. 15	½" - ¼"	45 lb./ac. (1.0 lb./ 1,000 sq.ft.)	90 lb./ac. (2 lb./1,000 sq.ft.)	90 lb./ac. (2 lb./1,000 sq.ft.)	2 tons/ac. (90 lb./1,000 sq.ft.)
	PERENNIAL RYEGRASS (10%)	25	MAR. 1-MAY 15 AUG. 1-OCT. 15	½" - ¼"				
	WHITE CLOVER (5%)	5	MAR. 1-MAY 15 AUG. 1-OCT. 15	½" - ¼"				

STORMWATER MANAGEMENT
STORMWATER WILL BE DIRECTED TO A BIORETENTION AREA VIA SHEET FLOW AS WELL AS ROOF DRAINS, SEE SHEET SWM-1.0 OF THIS CONSTRUCTION DOCUMENT FOR OTHER PERTINENT STORMWATER MANAGEMENT INFORMATION.

MAINTENANCE PROGRAM
AT A MINIMUM, ALL EROSION CONTROL MEASURES SHALL BE INSPECTED DAILY AND WITHIN 24 HOURS AFTER ANY STORM EVENT OF GREATER THAN 0.25 INCHES OF RAIN PER 24 HOUR PERIOD. THE FOLLOWING MEASURES SHALL BE CHECKED ACCORDINGLY:

CONSTRUCTION ENTRANCES: INSPECTION SHALL BE MADE DAILY FOR ENTRANCE INTEGRITY; REQUIRED REPAIRS SHALL BE MADE IMMEDIATELY. THE EXISTING ROAD/DRIVEWAY SHALL BE MAINTAINED AND REMAIN ACCESSIBLE TO USERS.

ROCK DITCH CHECKS: INSPECTION SHALL BE MADE DAILY FOR ROCK INTEGRITY; REQUIRED REPAIRS SHALL BE MADE IMMEDIATELY. SEDIMENT IS TO BE REMOVED WHEN DEPOSITS REACH ONE-HALF THE ROCK HEIGHT.

SMART FENCE: INSPECTION SHALL BE MADE DAILY FOR FENCE INTEGRITY; REQUIRED REPAIRS SHALL BE MADE IMMEDIATELY. SEDIMENT IS TO BE REMOVED WHEN DEPOSITS REACH ONE-HALF THE FENCE HEIGHT.

FILTER DIKE: INSPECTION SHALL BE MADE DAILY FOR DIKE INTEGRITY; REQUIRED REPAIRS SHALL BE MADE IMMEDIATELY. SEDIMENT IS TO BE REMOVED WHEN DEPOSITS REACH ONE-HALF THE DIKE HEIGHT.

INLET PROTECTION (SIP)(AGIP): INLET PROTECTION SHALL BE CHECKED FOR SEDIMENT ACCUMULATION AFTER EACH SIGNIFICANT RAINFALL. IF THE STONE FILTER BECOMES CLOGGED WITH SEDIMENT SO THAT IT NO LONGER PERFORMS ITS FUNCTION, THE STONES SHALL BE PULLED AWAY FROM THE INLET, CLEANED AND/OR REPLACED.

PERMANENT SEEDING (PS): SEEDED AREAS SHALL BE CHECKED REGULARLY TO ENSURE A GOOD STAND OF GRASS IS BEING MAINTAINED. AREAS THAT FAIL TO ESTABLISH VEGETATIVE COVER ADEQUATE TO PREVENT RILL EROSION SHALL BE RE-SEEDED AS SOON AS THEY ARE IDENTIFIED.

DEVICES SHOWN ARE TO BE CONSIDERED AS MINIMUM EROSION AND SEDIMENTATION CONTROLS. ADDITIONAL CONTROLS MAY BE NECESSARY DUE TO CONTRACTOR'S PHASING OR OTHER UNANTICIPATED CONDITIONS. IT IS THE CONTRACTOR'S RESPONSIBILITY TO PROVIDE ADDITIONAL DEVICES AS NECESSARY IN ORDER TO CONTROL EROSION AND SEDIMENTATION. EROSION AND SEDIMENTATION MEASURES SHALL BE INSTALLED AND MAINTAINED IN ACCORDANCE WITH THE STANDARDS AND SPECIFICATIONS IN THE 2011 MD STANDARD AND SPECIFICATIONS FOR SOIL EROSION AND SEDIMENT CONTROL. THE CONTRACTOR IS TO PROVIDE ADEQUATE MEANS OF CLEANING AND REMOVING ALL LAYING DUST AS NECESSARY BY APPLYING EITHER MOISTURE, CALCIUM CHLORIDE, OR OTHER APPROVED MATERIALS ALONG THOSE SECTIONS OF THE PROJECT ADJACENT TO EXISTING DWELLINGS OR PUBLIC ACCESS. CONTROLS MAY BE REMOVED AFTER THE AREAS ABOVE THEM HAVE BEEN STABILIZED AND WITH THE APPROVAL OF THE DIVISION OF ENVIRONMENTAL PROTECTION INSPECTOR.

EROSION & SEDIMENT CONTROL LEGEND

TITLE	KEY	SYMBOL
FILTER SOCK	FS	FS
TEMPORARY SEEDING	TS	TS
PERMANENT SEEDING	PS	PS
TEMPORARY STONE CONSTRUCTION ENTRANCE	CE	
STORM DRAIN INLET PROTECTION (GRAVEL / WIRE MESH)	IP	

MINIMUM CONSTRUCTION STANDARDS NARRATIVE

1. DURING CONSTRUCTION OF THE PROJECT, SOIL STOCKPILES AND BORROW AREAS SHALL BE STABILIZED OR PROTECTED WITH SEDIMENT TRAPPING MEASURES. THE CONTRACTOR IS RESPONSIBLE FOR THE TEMPORARY PROTECTION AND PERMANENT STABILIZATION OF ALL SOIL STOCKPILES ON SITE AS WELL AS BORROW AREAS AND SOIL INTENTIONALLY TRANSPORTED FROM THE PROJECT SITE.
2. A PERMANENT VEGETATIVE COVER SHALL BE ESTABLISHED ON DENUDED AREAS NOT OTHERWISE PERMANENTLY STABILIZED. PERMANENT VEGETATION SHALL NOT BE CONSIDERED ESTABLISHED UNTIL A GROUND COVER IS ACHIEVED THAT IS UNIFORM, MATURE ENOUGH TO SURVIVE, AND WILL INHIBIT EROSION.
3. SEDIMENT BARRIERS AND TRAPS, DIVERSION DIKES, AND OTHER MEASURES INTENDED TO TRAP SEDIMENT SHALL BE CONSTRUCTED AS A FIRST STEP IN ANY LAND-DISTURBING ACTIVITY AND SHALL BE MADE FUNCTIONAL BEFORE UPSLOPE LAND DISTURBANCE TAKES PLACE.
4. STABILIZATION MEASURES SHALL BE APPLIED TO EARTHEN DIVERSION STRUCTURES SUCH AS DIKES AND DITCHES IMMEDIATELY AFTER INSTALLATION.
5. SUMP PITS SHALL BE INSTALLED IN THE NUMBERS AND AT LOCATIONS THE CONTRACTOR DEEMS NECESSARY IN ORDER TO FACILITATE SITE DEWATERING. THE CONTRACTOR MAY RELOCATE SUMP PIT TO OPTIMIZE ITS USE. DISCHARGE LOCATIONS MUST BE COORDINATED WITH INSPECTOR. THE CONSTRUCTION OF SUMP PITS SHALL CONFIRM WITH THE GENERAL DESIGN CRITERIA SHOWN ON THE AVAILABLE SUMP PIT DETAIL.
6. CUT AND FILL SLOPES SHALL BE DESIGNED AND CONSTRUCTED IN A MANNER THAT WILL MINIMIZE EROSION. SLOPES THAT ARE FOUND TO BE ERODING EXCESSIVELY WITHIN ONE YEAR OF PERMANENT STABILIZATION SHALL BE PROVIDED WITH ADDITIONAL SLOPE STABILIZING MEASURES UNTIL THE PROBLEM IS CORRECTED.
7. CONCENTRATED RUNOFF SHALL NOT FLOW DOWN CUT OR FILL SLOPES UNLESS CONTAINED WITHIN AN ADEQUATE TEMPORARY OR PERMANENT CHANNEL, FLUME, OR SLOPE DRAIN STRUCTURE.
8. WHENEVER WATER SEEPS FROM A SLOPE FACE, ADEQUATE DRAINAGE OR OTHER PROTECTION SHALL BE PROVIDED.
9. ALL STORM SEWER INLETS THAT ARE MADE OPERABLE DURING CONSTRUCTION SHALL BE PROTECTED SO THAT SEDIMENT-LADEN WATER CANNOT ENTER THE CONVEYANCE SYSTEM WITHOUT FIRST BEING FILTERED OR OTHERWISE TREATED TO REMOVE SEDIMENT.
10. BEFORE NEWLY CONSTRUCTED STORMWATER CONVEYANCE CHANNELS OR PIPES ARE MADE OPERATIONAL, ADEQUATE OUTLET PROTECTION AND ANY REQUIRED TEMPORARY OR PERMANENT CHANNEL LINING SHALL BE INSTALLED IN BOTH THE CONVEYANCE CHANNEL AND RECEIVING CHANNEL.
11. UNDERGROUND UTILITY LINES SHALL BE INSTALLED IN ACCORDANCE WITH THE FOLLOWING STANDARDS IN ADDITION TO OTHER APPLICABLE CRITERIA:
    A. NO MORE THAN 500 LINEAR FEET OF TRENCH MAY BE OPENED AT ONE TIME.
    B. EXCAVATED MATERIAL SHALL BE PLACED ON THE UPHILL SIDE OF TRENCHES.
    C. EFFLUENT FROM DEWATERING OPERATIONS SHALL BE FILTERED OR PASSED THROUGH AN APPROVED SEDIMENT TRAPPING DEVICE, OR BOTH, AND DISCHARGED IN A MANNER THAT DOES NOT ADVERSELY AFFECT FLOWING STREAMS OR OFF-SITE PROPERTY.
    D. MATERIAL USED FOR BACKFILLING TRENCHES SHALL BE PROPERLY COMPACTED IN ORDER TO MINIMIZE EROSION AND PROMOTE STABILIZATION.
    E. RESTABILIZATION SHALL BE ACCOMPLISHED IN ACCORDANCE WITH THESE REGULATIONS.
    F. APPLICABLE SAFETY REGULATIONS SHALL BE COMPLIED WITH.
18. WHERE CONSTRUCTION VEHICLE ACCESS ROUTES INTERSECT PAVED OR PUBIC ROADS, PROVISIONS SHALL BE MADE TO MINIMIZE THE TRANSPORT OF SEDIMENT BY VEHICULAR TRACKING ONTO THE PAVED SURFACE. WHERE SEDIMENT IS TRANSPORTED ONTO A PAVED OR PUBLIC ROAD SURFACE, THE ROAD SURFACE SHALL BE CLEANED THOROUGHLY AT THE END OF EACH DAY. SEDIMENT SHALL BE REMOVED FROM THE ROADS BY SHOVELING OR SWEEPING AND TRANSPORTED TO A SEDIMENT CONTROL DISPOSAL AREA. STREET WASHING SHALL BE ALLOWED ONLY AFTER SEDIMENT IS REMOVED IN THIS MANNER. THIS PROVISION SHALL APPLY TO INDIVIDUAL DEVELOPMENT LOTS AS WELL AS TO LARGER LAND-DISTURBING ACTIVITIES.
19. TRAPPED SEDIMENT AND TEMPORARY MEASURES SHALL BE PERMANENTLY STABILIZED TO PREVENT FURTHER EROSION AND SEDIMENTATION. NO EROSION CONTROL MEASURE CAN BE CHANGED OR REMOVED WITHOUT THE PERMISSION OF THE CONSERVATION DISTRICT OFFICIAL.
20. PROPERTIES AND WATERWAYS DOWNSTREAM FROM DEVELOPMENT SITES SHALL BE PROTECTED FROM SEDIMENT DEPOSITION, EROSION AND DAMAGE DUE TO INCREASES IN VOLUME, VELOCITY AND PEAK FLOW RATE OF STORMWATER RUNOFF.
21. ALL MEASURES USED TO PROTECT PROPERTIES AND WATERWAYS SHALL BE EMPLOYED IN A MANNER WHICH MINIMIZES IMPACTS ON THE PHYSICAL, CHEMICAL, AND BIOLOGICAL INTEGRITY OF RIVERS, STREAMS, AND OTHER WATERS OF THE STATE.

SEQUENCE OF CONSTRUCTION FOR E&S

I. NOTIFICATION
A. FIVE (5) DAYS PRIOR TO THE START OF CONSTRUCTION CONTRACTOR TO NOTIFY THE CITY OF FROSTBURG, MDE AND THE ALLEGANY COUNTY SOIL CONSERVATION DISTRICT TO SCHEDULE A PRE-CONSTRUCTION MEETING.
B. NOTIFY THE ALLEGANY COUNTY DEPARTMENT OF ENGINEERING FIVE (5) DAYS PRIOR TO THE START OF CONSTRUCTION AT (301) 777-5933.
C. NOTIFY TRIAD ENGINEERING, INC. OF PRE-CONSTRUCTION MEETING TIME AND DATE - (304)296-2562
D. NOTIFY OWNER, MARYLAND DEPARTMENT OF THE ENVIRONMENT (301.689.1480) AND MISS UTILITY (800-257-7777) A MINIMUM OF 72 HOURS BEFORE THE START OF ANY EARTH WORK AND/OR DEMOLITION. CONTRACTOR OR OWNER IS RESPONSIBLE FOR SCHEDULING

II. INITIAL STABILIZATION - AFTER PRE CONSTRUCTION MEETING
A. CONTRACTOR TO INSTALL A CONSTRUCTION ENTRANCE (SCE) PER PLANS.
B. CONTRACTOR TO INSTALL FILTER SOCK AROUND THE PERIMETER OF THE LOD OF THE PROJECT SITE ALONG THE CONTOURS TO PROHIBIT SEDIMENT FROM LEAVING LOD.
C. TEMPORARILY SEED AREAS IN ACCORDANCE WITH STABILIZATION SPECIFICATIONS WITHIN THREE (3) CALENDAR DAYS.

III. BEGIN CONSTRUCTION
A. WITH THE PERIMETER CONTROLS IN PLACE , DEMO THE REMAINDER OF THE SITE.
B. STRIP TOPSOIL AND STOCKPILE ON SITE IN ACCORDANCE WITH THE APPROVED EROSION AND SEDIMENTATION CONTROL PLAN.
C. TEMPORARY SEED AND MULCH AREAS THAT WILL BE LEFT DENUDED, AS APPLICABLE, IN ACCORDANCE WITH STABILIZATION SPECIFICATIONS OF THE 2011 MD STANDARD AND SPECIFICATIONS FOR SOIL EROSION AND SEDIMENT CONTROL.

IV. ROUGH GRADING, BUILDING CONSTRUCTION AND UTILITY INSTALLATION
A. ROUGH GRADE THE PROPOSED SITE. ALL EARTHWORK SHALL BE COMPLETED IN ACCORDANCE WITH THE RECOMMENDATION OF THE GEOTECHNICAL REPORT PREPARED BY TRIAD ENGINEERING, INC.
C. CONTRACTOR SHALL INSTALL WATER, SEWER, UNDERGROUND ELECTRIC, TELEPHONE, AND CABLE UTILITIES IN ACCORDANCE WITH THE PLANS AND DETAILS.
D. CONTRACTOR TO INSTALL STORM DRAINS AND INLETS IN ACCORDANCE WITH THE PLANS AND DETAILS.
E. ONCE SLOPES REACH FINAL GRADE, TOPSOIL SHALL BE SPREAD, AND THE SLOPES SHALL BE STABILIZED WITH A PERMANENT SEED MIXTURE.
F. INSTALL THE REMAINING INLET PROTECTIONS AT ALL STORM INLETS.
G. THE CONTRACTOR SHALL CONSTRUCT THE PROPOSED TRANSFER STATION.

V. FINAL GRADING
A. THE CONTRACTOR SHALL GRADE THE PROPOSED ENTRANCE.
B. PERFORM FINAL GRADING OPERATION.
C. PLACE THE PROPOSED SUBBASE FOR PAVED AREAS.

VI. CONCRETE AND PARKING LOT CONSTRUCTION
VJ. FORM AND POUR THE PROPOSED SIDEWALKS.
VK. PLACE GRADED AGGREGATE FOR ALL GRAVEL AREAS.
VL. INSTALL THE PROPOSED LIGHTING.
VM. FINAL GRADE SURROUNDING AREAS, TOPSOIL, SEED AND MULCH IN ACCORDANCE WITH STABILIZATION SPECIFICATIONS WITHIN 3 CALENDAR DAYS.

VII. STORMWATER/WATER QUALITY CONSTRUCTION AND SITE CLOSEOUT
A. ONCE SITE IS STABILIZED, CONTRACTOR TO NOTIFY THE ALLEGANY COUNTY SOIL CONSERVATION DISTRICT AND THE CITY OF FROSTBURG DEPARTMENT OF ENGINEERING OF INTENT TO PERFORM SWM WATER QUALITY WORK 5 DAYS PRIOR TO CONSTRUCTION.
B. WITH NOTICE TO PROCEED, EXCAVATE AND CONSTRUCT THE BIO-RETENTION AREA AS SHOWN ON PLANS. REMOVE EXCAVATED MATERIALS FROM SITE AND PLACE IN AN APPROVED SPOILS AREA. ALL FILL MATERIAL BEING IMPORTED OR EXPORTED FROM THE SITE MUST COME FROM OR GO TO A SITE WITH AN APPROVED AND CURRENT SOIL EROSION AND SEDIMENT CONTROL PLAN.
C. INSTALL GRAVEL SUBBASE AND UNDERDRAINS, PEA GRAVEL AND FILTERING MEDIA AS WELL AS INLET AND OUTFALL PIPE AND OUTLET PROTECTION IN ACCORDANCE WITH THE SWG, BRA, & BSA SPECIFICATIONS.
D. INSTALL ALL PLANTINGS PER PLAN.
E. INSTALL INLET PROTECTION (SIP(2)).
F. FINAL GRADE ADJOINING AREAS TO THE SGW, BRA's & BSA AREAS, TOPSOIL, SEED AND MULCH ALL DISTURBED AREAS IN ACCORDANCE WITH STABILIZATION SPECIFICATIONS WITHIN 3 CALENDAR DAYS.
G. WITH THE ENTIRE SITE FINAL GRADED AND 95% VEGETATION COVERAGE ESTABLISHED, NOTIFY THE CITY OF FROSTBUG, ALLEGANY COUNTY SOIL CONSERVATION DISTRICT AND THE ALLEGANY COUNTY DEPARTMENT OF ENGINEERING AT LEAST FIVE (5) DAYS PRIOR TO THE REMOVAL OF ANY SEDIMENT CONTROL FEATURES TO SCHEDULE A FINAL SITE CLOSEOUT REVIEW MEETING.
H. UPON APPROVAL BY THE CITY OF FROSTBURG, ALLEGANY COUNTY SOIL CONSERVATION DISTRICT AND THE ALLEGANY COUNTY DEPARTMENT OF ENGINEERING, REMOVE ALL TEMPORARY SEDIMENT CONTROL DEVICES.
I. STABILIZE, SEED AND MULCH ANY AREAS DISTURBED DURING CONTROL REMOVE.
J. AS-BUILT SWM FACILITIES - INCLUDES FIELD SURVEY, ELEVATIONS AND MATERIAL TICKETS FOR, STONE, PEA GRAVEL, MEDIA AND PLANTS.
K. DURING CONSTRUCTION OF FACILITY CONTRACTOR TO HAVE A REPRESENTATIVE FROM TRIAD ENGINEERING ON SITE FOR OBSERVATION.
L. CONTRACTOR TO PROVIDE INSPECTION REPORTS AND PHOTOS DURING INSTALLATION.

IX. FINAL STEP IN SEQUENCE
A. CONTACT MDE AFTER SITE HAS BEEN STABILIZED FOR PERMISSION TO REMOVE TEMPORARY SEC DEVICES AND RE-STABILIZE AS NECESSARY.TIME TABLE OF WHEN WORK IS TO BE COMMENCED AND COMPLETED.

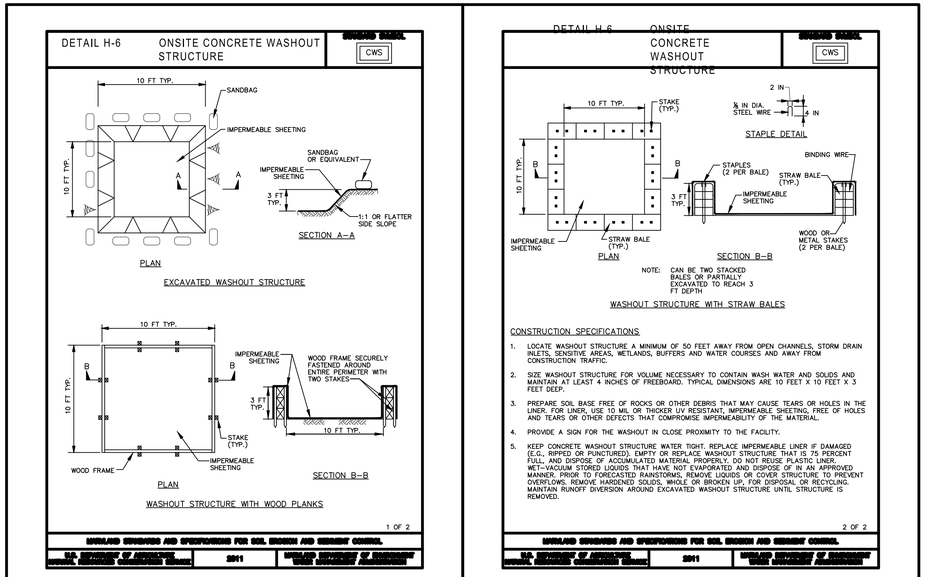

15 **CONCRETE WASHOUT STRUCTURE**
NOT TO SCALE

TRIAD ENGINEERING, INC.
1097 CHAPLIN ROAD
MORGANTOWN, WV 26501
PH: 304.296.2562 FAX: 304.296.8739
OFFICE LOCATIONS
MARYLAND • PENNSYLVANIA • VIRGINIA
WEST VIRGINIA • OHIO

REV. #	DATE	DESCRIPTION	BY

CADD FILE: C-01 Cover Sheet.DWG
DRAWN BY: RDB
CHECKED BY: WME
DATE: 06-19-2026
SCALE: AS SHOWN

7/14/2026

SHEETZ STORE REBUILD - #62
FROSTBURG, MARYLAND

E & S NARRATIVE AND DETAILS

TRIAD ENGINEERING, INC.
www.triadeng.com

SHEET NUMBER:
ENS-3
JOB NO.: 01-24-0390

DETAIL B-1 STABILIZED CONSTRUCTION ENTRANCE

STANDARD SYMBOL: SCE

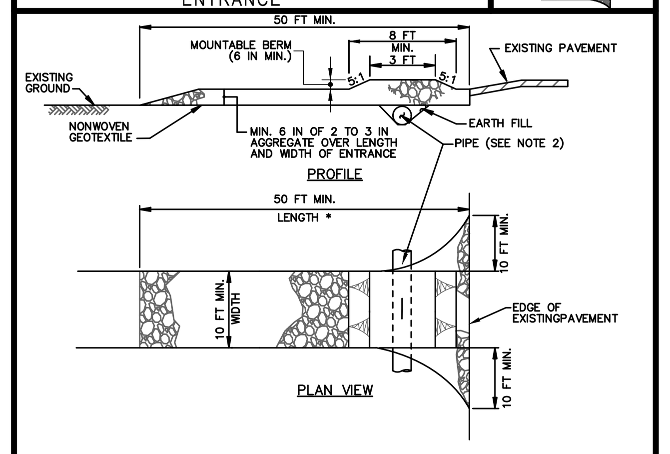

CONSTRUCTION SPECIFICATIONS

1. PLACE STABILIZED CONSTRUCTION ENTRANCE IN ACCORDANCE WITH THE APPROVED PLAN. VEHICLES MUST TRAVEL OVER THE ENTIRE LENGTH OF THE SCE. USE MINIMUM LENGTH OF 50 FEET (*30 FEET FOR SINGLE RESIDENCE LOT). USE MINIMUM WIDTH OF 10 FEET. FLARE SCE 10 FEET MINIMUM AT THE EXISTING ROAD TO PROVIDE A TURNING RADIUS.
2. PIPE ALL SURFACE WATER FLOWING TO OR DIVERTED TOWARD THE SCE UNDER THE ENTRANCE, MAINTAINING POSITIVE DRAINAGE. PROTECT PIPE INSTALLED THROUGH THE SCE WITH A MOUNTABLE BERM WITH 5:1 SLOPES AND A MINIMUM OF 12 INCHES OF STONE OVER THE PIPE. PROVIDE PIPE AS SPECIFIED ON APPROVED PLAN. WHEN THE SCE IS LOCATED AT A HIGH SPOT AND HAS NO DRAINAGE TO CONVEY, A PIPE IS NOT NECESSARY. A MOUNTABLE BERM IS REQUIRED WHEN SCE IS NOT LOCATED AT A HIGH SPOT.
3. PREPARE SUBGRADE AND PLACE NONWOVEN GEOTEXTILE, AS SPECIFIED IN SECTION H–1 MATERIALS.
4. PLACE CRUSHED AGGREGATE (2 TO 3 INCHES IN SIZE) OR EQUIVALENT RECYCLED CONCRETE (WITHOUT REBAR) AT LEAST 6 INCHES DEEP OVER THE LENGTH AND WIDTH OF THE SCE.
5. MAINTAIN ENTRANCE IN A CONDITION THAT MINIMIZES TRACKING OF SEDIMENT. ADD STONE OR MAKE OTHER REPAIRS AS CONDITIONS DEMAND TO MAINTAIN CLEAN SURFACE, MOUNTABLE BERM, AND SPECIFIED DIMENSIONS. IMMEDIATELY REMOVE STONE AND/OR SEDIMENT SPILLED, DROPPED, OR TRACKED ONTO ADJACENT ROADWAY BY VACUUMING, SCRAPING, AND/OR SWEEPING. WASHING ROADWAY TO REMOVE MUD TRACKED ONTO PAVEMENT IS NOT ACCEPTABLE UNLESS WASH WATER IS DIRECTED TO AN APPROVED SEDIMENT CONTROL PRACTICE.

MARYLAND STANDARDS AND SPECIFICATIONS FOR SOIL EROSION AND SEDIMENT CONTROL
U.S. DEPARTMENT OF AGRICULTURE NATURAL RESOURCES CONSERVATION SERVICE | 2011 | MARYLAND DEPARTMENT OF ENVIRONMENT WATER MANAGEMENT ADMINISTRATION

1 STABILIZED CONSTRUCTION ENTRANCE
NOT TO SCALE

DETAIL E-1 SILT FENCE

STANDARD SYMBOL: SF

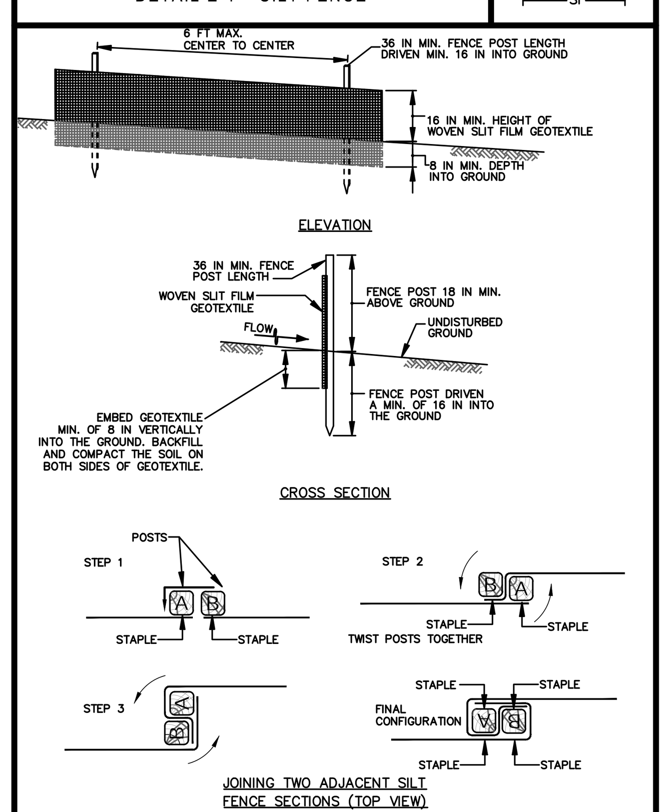

MARYLAND STANDARDS AND SPECIFICATIONS FOR SOIL EROSION AND SEDIMENT CONTROL
U.S. DEPARTMENT OF AGRICULTURE NATURAL RESOURCES CONSERVATION SERVICE | 2011 | MARYLAND DEPARTMENT OF ENVIRONMENT WATER MANAGEMENT ADMINISTRATION

2 SILT FENCE
NOT TO SCALE

DETAIL E-6 FILTER LOG

STANDARD SYMBOL: FL–18
DESIGNATION FL–18 REFERS TO 18 INCH DIAMETER FILTER LOG.

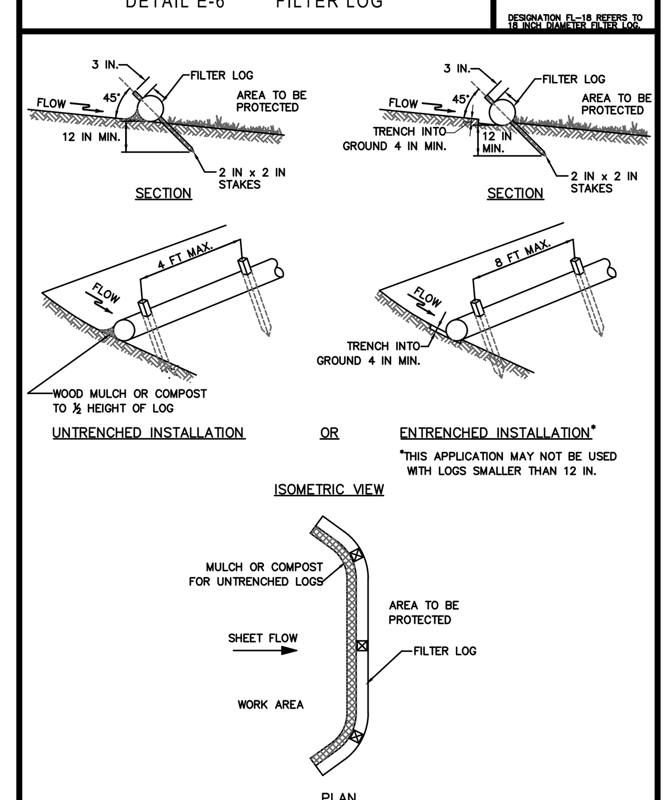

1 OF 2

MARYLAND STANDARDS AND SPECIFICATIONS FOR SOIL EROSION AND SEDIMENT CONTROL
U.S. DEPARTMENT OF AGRICULTURE NATURAL RESOURCES CONSERVATION SERVICE | 2011 | MARYLAND DEPARTMENT OF ENVIRONMENT WATER MANAGEMENT ADMINISTRATION

3 FILTER SOCK
NOT TO SCALE

TEMPORARY SEEDING SUMMARY

HARDINESS ZONE (FROM FIGURE B.3): 6-b
SEED MIXTURE (FROM TABLE B.1):

No.	SPECIES	APPLICATION RATE (LB. / AC.)	SEEDING DATES	SEEDING DEPTHS (inches)	FERTILIZER RATE (10-20-20)	LIME RATE
	BARLEY (HORDEUM VULGARE)	96 lb/ac. 2.2 lb/1000 s.f.	MAR. 1 - MAY 15 AUG. 1 - OCT. 15	1.0	436 lb./ac. (10 lb./1,000 sq.ft.)	2 tons/ac. (90 lb./1,000 sq.ft.)

PERMANENT SEEDING SUMMARY

HARDINESS ZONE (FROM FIGURE B.3): 6-b
SEED MIXTURE (FROM TABLE B.3):

No.	SPECIES	APPLICATION RATE (LB. / AC.)	SEEDING DATES	SEEDING DEPTHS (inches)	FERTILIZER RATE (10-20-20) N	P205	K20	LIME RATE
	TALL FESCUE (85%)	40	MAR. 1-MAY 15 AUG. 1-OCT. 15	¼" - ½"	45 lb./ac. (1.0 lb./ 1,000 sq.ft.)	90 lb./ac. (2 lb./1,000 sq.ft.)	90 lb./ac. (2 lb./1,000 sq.ft.)	2 tons/ac. (90 lb./1,000 sq.ft.)
	PERENNIAL RYEGRASS (10%)	25	MAR. 1-MAY 15 AUG. 1-OCT. 15	¼" - ½"				
	WHITE CLOVER (5%)	5	MAR. 1-MAY 15 AUG. 1-OCT. 15	¼" - ½"				

4 TEMPORARY AND PERMANENT SEEDING SUMMARY
NOT TO SCALE

DETAIL E-9-1 STANDARD INLET PROTECTION

STANDARD SYMBOL: SIP

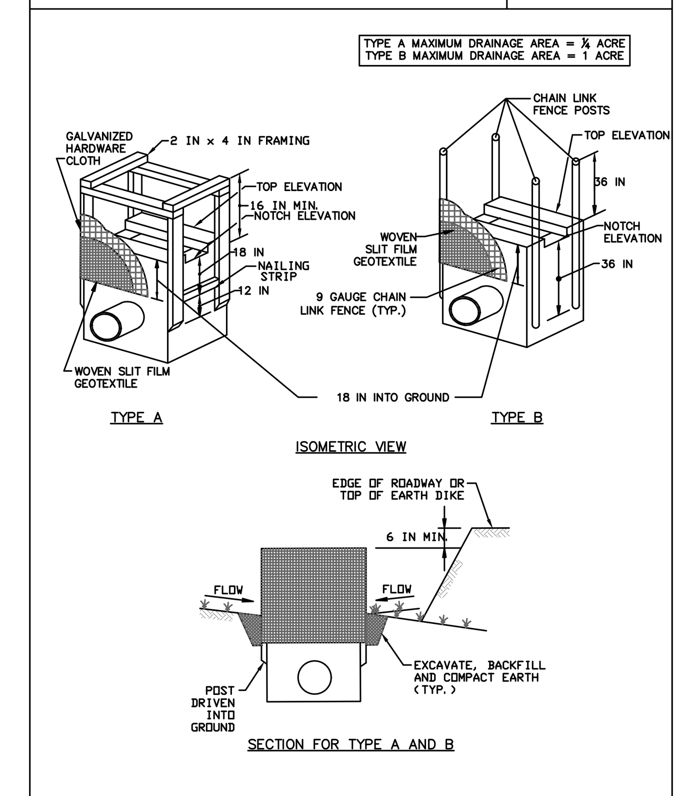

MARYLAND STANDARDS AND SPECIFICATIONS FOR SOIL EROSION AND SEDIMENT CONTROL
U.S. DEPARTMENT OF AGRICULTURE NATURAL RESOURCES CONSERVATION SERVICE | 2011 | MARYLAND DEPARTMENT OF ENVIRONMENT WATER MANAGEMENT ADMINISTRATION

5 STANDARD INLET PROTECTION
NOT TO SCALE

DETAIL B-4-6-B TEMPORARY SOIL STABILIZATION MATTING SLOPE APPLICATION

STANDARD SYMBOL: TSSMS – * lb/ft² (* INCLUDE SHEAR STRESS)

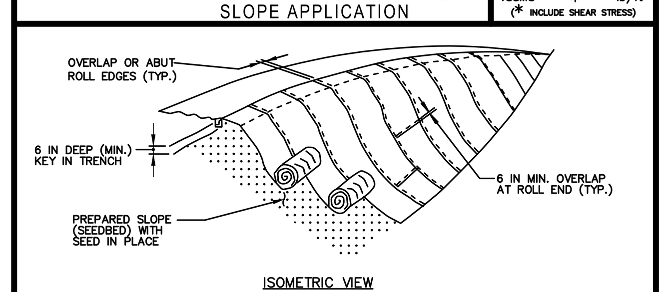

CONSTRUCTION SPECIFICATIONS

1. USE MATTING THAT HAS A DESIGN VALUE FOR SHEAR STRESS EQUAL TO OR HIGHER THAN THE SHEAR STRESS DESIGNATED ON APPROVED PLANS.
2. USE TEMPORARY SOIL STABILIZATION MATTING MADE OF DEGRADABLE (LASTS 6 MONTHS MINIMUM) NATURAL OR MAN–MADE FIBERS (MOSTLY ORGANIC). MAT MUST HAVE UNIFORM THICKNESS AND DISTRIBUTION OF FIBERS THROUGHOUT AND BE SMOLDER RESISTANT. CHEMICALS USED IN THE MAT MUST BE NON–LEACHING AND NON–TOXIC TO VEGETATION AND SEED GERMINATION AND NON–INJURIOUS TO THE SKIN. IF PRESENT, NETTING MUST BE EXTRUDED PLASTIC WITH A MAXIMUM MESH OPENING OF 2x2 INCHES AND SUFFICIENTLY BONDED OR SEWN ON 2 INCH CENTERS ALONG LONGITUDINAL AXIS OF THE MATERIAL TO PREVENT SEPARATION OF THE NET FROM THE PARENT MATERIAL.
3. SECURE MATTING USING STEEL STAPLES, WOOD STAKES, OR BIODEGRADABLE EQUIVALENT. STAPLES MUST BE "U" OR "T" SHAPED STEEL WIRE HAVING A MINIMUM GAUGE OF NO. 11 AND NO. 8 RESPECTIVELY. "U" SHAPED STAPLES MUST AVERAGE 1 TO 1½ INCHES WIDE AND BE A MINIMUM OF 6 INCHES LONG. "T" SHAPED STAPLES MUST HAVE A MINIMUM 8 INCH MAIN LEG, A MINIMUM 1 INCH SECONDARY LEG, AND A MINIMUM 4 INCH HEAD. WOOD STAKES MUST BE ROUGH–SAWN HARDWOOD, 12 TO 24 INCHES IN LENGTH, 1x3 INCH IN CROSS SECTION, AND WEDGE SHAPED AT THE BOTTOM.
4. PERFORM FINAL GRADING, TOPSOIL APPLICATION, SEEDBED PREPARATION, AND PERMANENT SEEDING IN ACCORDANCE WITH SPECIFICATIONS. PLACE MATTING WITHIN 48 HOURS OF COMPLETING SEEDING OPERATIONS UNLESS END OF WORKDAY STABILIZATION IS SPECIFIED ON THE APPROVED EROSION & SEDIMENT CONTROL PLAN.
5. UNROLL MATTING DOWNSLOPE. LAY MAT SMOOTHLY AND FIRMLY UPON THE SEEDED SURFACE. AVOID STRETCHING THE MATTING.
6. OVERLAP OR ABUT ROLL EDGES PER MANUFACTURER RECOMMENDATIONS. OVERLAP ROLL ENDS BY 6 INCHES (MINIMUM), WITH THE UPSLOPE MAT OVERLAPPING ON TOP OF THE DOWNSLOPE MAT.
7. KEY IN THE UPSLOPE END OF MAT 6 INCHES (MINIMUM) BY DIGGING A TRENCH, PLACING THE MATTING ROLL END IN THE TRENCH, STAPLING THE MAT IN PLACE, REPLACING THE EXCAVATED MATERIAL, AND TAMPING TO SECURE THE MAT END IN THE KEY.
8. STAPLE/STAKE MAT IN A STAGGERED PATTERN ON 4 FOOT (MAXIMUM) CENTERS THROUGHOUT AND 2 FOOT (MAXIMUM) CENTERS ALONG SEAMS, JOINTS, AND ROLL ENDS.
9. ESTABLISH AND MAINTAIN VEGETATION SO THAT REQUIREMENTS FOR ADEQUATE VEGETATIVE ESTABLISHMENT ARE CONTINUOUSLY MET IN ACCORDANCE WITH SECTION B–4 VEGETATIVE STABILIZATION.

MARYLAND STANDARDS AND SPECIFICATIONS FOR SOIL EROSION AND SEDIMENT CONTROL
U.S. DEPARTMENT OF AGRICULTURE NATURAL RESOURCES CONSERVATION SERVICE | 2011 | MARYLAND DEPARTMENT OF ENVIRONMENT WATER MANAGEMENT ADMINISTRATION

6 TEMPORARY SOIL STABILIZATION MATTING SLOPE APPLICATION
NOT TO SCALE

TEMPORARY SEEDING SUMMARY

HARDINESS ZONE (FROM FIGURE B.3): 6-b
SEED MIXTURE (FROM TABLE B.1):

No.	SPECIES	APPLICATION RATE (LB. / AC.)	SEEDING DATES	SEEDING DEPTHS (inches)	FERTILIZER RATE (10-20-20)	LIME RATE
	BARLEY (HORDEUM VULGARE)	96 lb/ac. 2.2 lb/1000 s.f.	MAR. 15 - MAY 31 AUG. 1 - SEPT. 30	1.0	436 lb./ac. (10 lb./1,000 sq.ft.)	2 tons/ac. (90 lb./1,000 sq.ft.)

STANDARD STABILIZATION NOTE
FOLLOWING INITIAL SOIL DISTURBANCE OR RE-DISTURBANCE, PERMANENT OR TEMPORARY STABILIZATION MUST BE COMPLETED WITHIN:

A.) THREE (3) CALENDAR DAYS AS TO THE SURFACE OF ALL PERIMETER DIKES, SWALES, DITCHES, PERIMETER SLOPES, AND ALL SLOPES STEEPER THAN 3 HORIZONTAL TO 1 VERTICAL (3:1); AND

B.) SEVEN (7) CALENDAR DAYS AS TO ALL OTHER DISTURBED OR GRADED AREAS ON THE PROJECT SITE NOT UNDER ACTIVE GRADING.

REQUIRED STANDARD EROSION ANDSEDIMENT CONTROL NOTES

1. THE CONTRACTOR SHALL PROTECT ALL POINTS OF CONSTRUCTION INGRESS AND EGRESS TO PREVENT THE DEPOSITION OF MATERIALS ONTO PUBLIC ROADS. ALL MATERIALS DEPOSITED UNTO PUBLIC ROADS SHALL BE REMOVED IMMEDIATELY.
2. THE CONTRACTOR SHALL INSPECT DAILY AND MAINTAIN CONTINUOUSLY IN ALL EFFECTIVE OPERATING CONDITION ALL EROSION AND SEDIMENT CONTROL MEASURES UNTIL SUCH TIME AS PERMANENT STABILIZATION OF EXPOSED SOIL OCCURS.
3. WHEN PROPERTY IS BROUGHT TO FINISHED GRADE DURING THE MONTHS OF NOVEMBER THROUGH FEBRUARY, AND PERMANENT STABILIZATION IS FOUND TO E IMPRACTICAL, TEMPORARY SEED AND ANCHORED STRAW MULCH SHALL BE APPLIED TO DISTURBED AREAS. THE FINAL PERMANENT STABILIZATION OF SUCH PROPERTY SHALL BE APPLIED BY APRIL 15 OR EARLIER IF GROUND AND WEATHER CONDITIONS ALLOW.
4. THE SITE'S APPROVED EROSION AND SEDIMENT CONTROL PLANS SHALL BE AVAILABLE AT THE SITE.
5. THE APPLICANT IS RESPONSIBLE FOR OBTAINING ANY OTHER FEDERAL, STATE, OR LOCAL AUTHORIZATIONS WHICH MAY BE REQUIRED.
6. FOLLOWING INITIAL SOIL DISTURBANCE OR RE-DISTURBANCE, PERMANENT OR TEMPORARY STABILIZATION SHALL BE COMPLETED WITHIN THREE (3) CALENDAR DAYS AS TO THE SURFACE OF ALL PERIMETER CONTROLS, DIKES, SWALES, DITCHES,PERIMETER SLOPES, AND ALL SLOPES GREATER THAN 3 HORIZONTAL TO 1 VERTICAL (3:1); AND SEVEN (7) DAYS AS TO ALL OTHER DISTURBED OR GRADED AREAS ON THE PROJECT SITE.
7. THE APPROVAL OF THIS PLAN MAKES NO REPRESENTATION AS TO THE EXISTENCE OR NON-EXISTENCE OF ANY UTILITIES AT THIS SITE. IT IS THE RESPONSIBILITY OF THE LANDOWNERS OR OPERATORS AND CONTRACTORS TO ASSURE THE NO HAZARD EXISTS OR DAMAGE WILL OCCUR TO UTILITIES. IT IS SUGGESTED THAT MISS UTILITY BE CONTACTED AT: PHONE 1-800-257-7777.

PERMANENT SEEDING SUMMARY

HARDINESS ZONE (FROM FIGURE B.3): 6-b
SEED MIXTURE (FROM TABLE B.3):

No.	SPECIES	APPLICATION RATE (LB. / AC.)	SEEDING DATES	SEEDING DEPTHS (inches)	FERTILIZER RATE (10-20-20) N	P205	K20	LIME RATE
	TALL FESCUE (85%)	40	MAR. 1-MAY 15 AUG. 1-OCT. 15	¼" - ½"	45 lb./ac. (1.0 lb./ 1,000 sq.ft.)	90 lb./ac. (2 lb./1,000 sq.ft.)	90 lb./ac. (2 lb./1,000 sq.ft.)	2 tons/ac. (90 lb./1,000 sq.ft.)
	PERENNIAL RYEGRASS (10%)	25	MAR. 1-MAY 15 AUG. 1-OCT. 15	¼" - ½"				
	WHITE CLOVER (5%)	5	MAR. 1-MAY 15 AUG. 1-OCT. 15	¼" - ½"				

1. SEEDING
   A. ALL SEED MUST MEET THE REQUIREMENTS OF THE MARYLAND STATE SEED LAW. ALL SEED MUST BE SUBJECT TO RE-TESTING BY A RECOGNIZED SEED LABORATORY. ALL SEED USED MUST HAVE BEEN TESTED WITHIN THE 6 MONTHS IMMEDIATELY PRECEDING THE DATE OF SOWING SUCH MATERIAL ON ANY PROJECT. REFER TO TABLE B.4 REGARDING THE QUALITY OF SEED. SEED TAGS MUST BE AVAILABLE UPON REQUEST TO THE INSPECTOR TO VERIFY TYPE OF SEED AND SEEDING RATE
   B. IDEAL TIMES OF SEEDING FOR TURF GRASS MIXTURES WESTERN MD: MARCH 15 TO JUNE 1, AUGUST 1 TO OCTOBER 1 (HARDINESS ZONES: 5B, 6A)
   C. TILL AREAS TO RECEIVE SEED BY DISKING OR OTHER APPROVED METHODS TO A DEPTH OF 2 TO 4 INCHES, LEVEL AND RAKE THE AREAS TO PREPARE A PROPER SEEDBED. REMOVE STONES AND DEBRIS OVER 1½ INCHES IN DIAMETER. THE RESULTING SEEDBED MUST BE IN SUCH CONDITION THAT FUTURE MOWING OF GRASSES WILL POSE NO DIFFICULTY.
   D. IF SOIL MOISTURE IS DEFICIENT, SUPPLY NEW SEEDINGS WITH ADEQUATE WATER FOR PLANT GROWTH (½ TO 1 INCH EVERY 3 TO 4 DAYS DEPENDING ON SOIL TEXTURE) UNTIL THEY ARE FIRMLY ESTABLISHED. THIS IS ESPECIALLY TRUE WHEN SEEDINGS ARE MADE LATE IN THE PLANTING SEASON, IN ABNORMALLY DRY OR HOT SEASONS, OR ON ADVERSE SITES.
2. TURFGRASS MIXTURES
   A. AREAS WHERE TURFGRASS MAY BE DESIRED INCLUDE LAWNS, PARKS, PLAYGROUNDS, AND COMMERCIAL SITES WHICH WILL RECEIVE A MEDIUM TO HIGH LEVEL OF MAINTENANCE.
   B. SELECT ONE OR MORE OF THE SPECIES OR MIXTURES LISTED BELOW BASED ON THE SITE CONDITIONS OR PURPOSE. ENTER SELECTED MIXTURE(S), APPLICATION RATES, AND SEEDING DATES IN THE PERMANENT SEEDING SUMMARY. THE SUMMARY IS TO BE PLACED ON THE PLAN.
   E. I. KENTUCKY BLUEGRASS: FULL SUN MIXTURE: FOR USE IN AREAS THAT RECEIVE INTENSIVE MANAGEMENT. IRRIGATION REQUIRED IN THE AREAS OF CENTRAL MARYLAND AND EASTERN SHORE.
   E. RECOMMENDED CERTIFIED KENTUCKY BLUEGRASS CULTIVARS SEEDING RATE: 1.5 TO 2.0 POUNDS PER 1000 SQUARE FEET. CHOOSE A MINIMUM OF THREE KENTUCKY BLUEGRASS CULTIVARS WITH EACH RANGING FROM 10 TO 35 PERCENT OF THE TOTAL MIXTURE BY WEIGHT.
   F. II. KENTUCKY BLUEGRASS/PERENNIAL RYE: FULL SUN MIXTURE: FOR USE IN FULL SUN AREAS WHERE RAPID ESTABLISHMENT IS NECESSARY AND WHEN TURF WILL RECEIVE MEDIUM TO INTENSIVE MANAGEMENT. CERTIFIED PERENNIAL RYEGRASS CULTIVARS/CERTIFIED KENTUCKY BLUEGRASS SEEDING RATE: 2 POUNDS MIXTURE PER 1000 SQUARE FEET. CHOOSE A MINIMUM OF THREE KENTUCKY BLUEGRASS CULTIVARS WITH EACH RANGING FROM 10 TO 35 PERCENT OF THE TOTAL MIXTURE BY WEIGHT.
   G. III. TALL FESCUE/KENTUCKY BLUEGRASS: FULL SUN MIXTURE: FOR USE IN DROUGHT PRONE AREAS AND/OR FOR AREAS RECEIVING LOW TO MEDIUM MANAGEMENT IN FULL SUN TO MEDIUM SHADE.
   H. RECOMMENDED MIXTURE INCLUDES; CERTIFIED TALL FESCUE CULTIVARS 95 TO 100 PERCENT,
   I. CERTIFIED KENTUCKY BLUEGRASS CULTIVARS 0 TO 5 PERCENT. SEEDING RATE: 5 TO 8 POUNDS PER 1000 SQUARE FEET. ONE OR MORE CULTIVARS MAY BE BLENDED.
   J. IV. KENTUCKY BLUEGRASS/FINE FESCUE: SHADE MIXTURE: FOR USE IN AREAS WITH SHADE IN BLUEGRASS LAWNS. FOR ESTABLISHMENT IN HIGH QUALITY, INTENSIVELY MANAGED TURF AREA. MIXTURE INCLUDES; CERTIFIED KENTUCKY BLUEGRASS CULTIVARS 30 TO 40 PERCENT AND CERTIFIED FINE FESCUE AND 60 TO 70 PERCENT. SEEDING RATE: 1½ TO 3 POUNDS PER 1000 SQUARE FEET.
   K. NOTES: SELECT TURFGRASS VARIETIES FROM THOSE LISTED IN THE MOST CURRENT UNIVERSITY OF MARYLAND PUBLICATION, AGRONOMY MEMO #77, "TURFGRASS CULTIVAR RECOMMENDATIONS FOR MARYLAND" CHOOSE CERTIFIED MATERIAL. CERTIFIED MATERIAL IS THE BEST GUARANTEE OF CULTIVAR PURITY. THE CERTIFICATION PROGRAM OF THE MARYLAND DEPARTMENT OF AGRICULTURE, TURF AND SEED SECTION, PROVIDES A RELIABLE MEANS OF CONSUMER PROTECTION AND ASSURES A PURE GENETIC LINE

7 TEMPORARY AND PERMANENT SEEDING SUMMARY
NOT TO SCALE

DETAIL D-4-1-A ROCK OUTLET PROTECTION I

STANDARD SYMBOL: ROP1

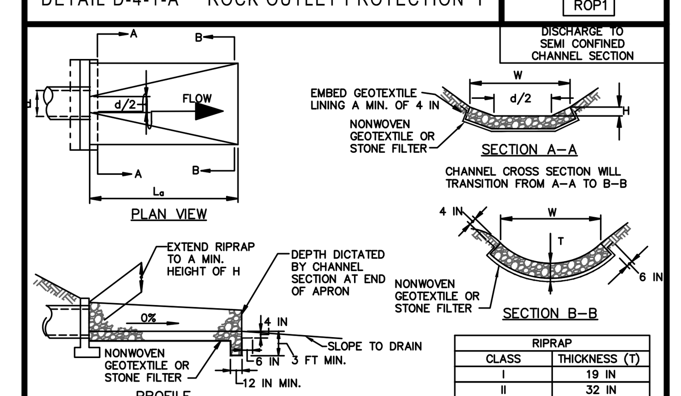

RIPRAP	
CLASS	THICKNESS (T)
I	19 IN
II	32 IN
III	46 IN

CONSTRUCTION SPECIFICATIONS

1. RIPRAP AND STONE MUST CONFORM TO THE SPECIFIED CLASS.
2. USE NONWOVEN GEOTEXTILE AS SPECIFIED IN SECTION H–1 MATERIALS, AND PROTECT FROM PUNCTURING, CUTTING, OR TEARING. REPAIR ANY DAMAGE OTHER THAN AN OCCASIONAL SMALL HOLE BY PLACING ANOTHER PIECE OF GEOTEXTILE OVER THE DAMAGED PART OR BY COMPLETELY REPLACING THE GEOTEXTILE. PROVIDE A MINIMUM OF ONE FOOT OVERLAP FOR ALL REPAIRS AND FOR JOINING TWO PIECES OF GEOTEXTILE TOGETHER.
3. PREPARE THE SUBGRADE FOR GEOTEXTILE OR STONE FILTER (⅜ TO 1½ INCH STONE FOR 6 INCH MINIMUM DEPTH) AND RIPRAP TO THE REQUIRED LINES AND GRADES. COMPACT ANY FILL REQUIRED IN THE SUBGRADE TO A DENSITY OF APPROXIMATELY THAT OF THE SURROUNDING UNDISTURBED MATERIAL.
4. EXTEND GEOTEXTILE AT LEAST 6 INCHES BEYOND EDGES OF RIPRAP AND EMBED AT LEAST 4 INCHES AT SIDES OF THE RIPRAP.
5. CONSTRUCT RIPRAP OUTLET TO FULL COURSE THICKNESS IN ONE OPERATION AND IN SUCH A MANNER AS TO AVOID DISPLACEMENT OF UNDERLYING MATERIALS. PLACE STONE FOR RIPRAP OUTLET IN A MANNER THAT WILL ENSURE THAT IT IS REASONABLY HOMOGENOUS WITH THE SMALLER STONES AND SPALLS FILLING THE VOIDS BETWEEN THE LARGER STONES. PLACE RIPRAP IN A MANNER TO PREVENT DAMAGE TO THE STONE FILTER BLANKET OR GEOTEXTILE. HAND PLACE TO THE EXTENT NECESSARY.
6. WHERE NO ENDWALL IS USED, CONSTRUCT THE UPSTREAM END OF THE APRON SO THAT THE WIDTH IS TWO TIMES THE DIAMETER OF THE OUTLET PIPE, AND EXTEND THE STONE UNDER THE OUTLET BY A MINIMUM OF 18 INCHES.
7. CONSTRUCT APRON WITH 0% SLOPE ALONG ITS LENGTH AND WITHOUT OBSTRUCTIONS. PLACE STONE SO THAT IT BLENDS IN WITH EXISTING GROUND.
8. MAINTAIN LINE, GRADE, AND CROSS SECTION. KEEP OUTLET FREE OF EROSION. REMOVE ACCUMULATED SEDIMENT AND DEBRIS. AFTER HIGH FLOWS INSPECT FOR SCOUR AND DISLODGED RIPRAP. MAKE NECESSARY REPAIRS IMMEDIATELY.

MARYLAND STANDARDS AND SPECIFICATIONS FOR SOIL EROSION AND SEDIMENT CONTROL
U.S. DEPARTMENT OF AGRICULTURE NATURAL RESOURCES CONSERVATION SERVICE | 2011 | MARYLAND DEPARTMENT OF ENVIRONMENT WATER MANAGEMENT ADMINISTRATION

8 ROCK OUTLET PROTECTION FOR PIPES
NOT TO SCALE

TRIAD ENGINEERING, INC.
1097 CHAPLIN ROAD
MORGANTOWN, WV 26501
PH: 304.296.2562 FAX: 304.296.8739
OFFICE LOCATIONS
MARYLAND - PENNSYLVANIA - VIRGINIA
WEST VIRGINIA - OHIO

REV. #	DATE	DESCRIPTION	BY

CADD FILE: C-01 Cover Sheet.DWG
DRAWN BY: RDB | CHECKED BY: WME
DATE: 06-19-2026 | SCALE: AS SHOWN

7/14/2026

SHEETZ STORE REBUILD - #62
FROSTBURG, MARYLAND

E & S DETAILS

TRIAD ENGINEERING, INC.
www.triadeng.com

SHEET NUMBER:
ENS-4
JOB NO.: 01-24-0390

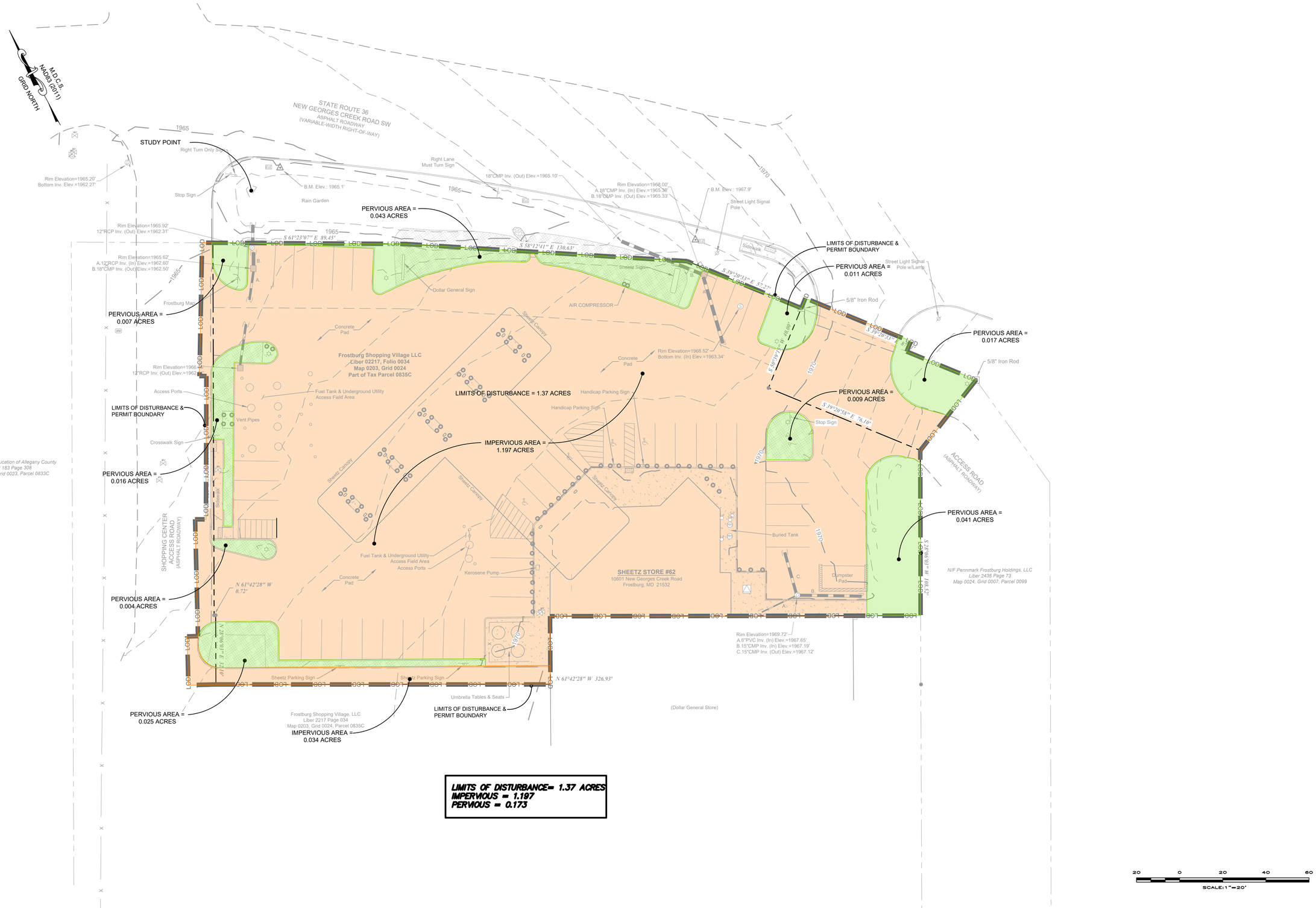

LIMITS OF DISTURBANCE= 1.37 ACRES
IMPERVIOUS = 1.197
PERVIOUS = 0.173

TRIAD ENGINEERING, INC.
1097 CHAPLIN ROAD
MORGANTOWN, WV 26501
PH: 304.296.2562 FAX: 304.296.8739
OFFICE LOCATIONS
MARYLAND, PENNSYLVANIA, VIRGINIA
WEST VIRGINIA, OHIO

REV. #	DATE	DESCRIPTION	BY

CADD FILE: C-01 Cover Sheet.DWG	CHECKED BY: WME	SCALE: AS SHOWN
DRAWN BY: RDB		
DATE: 06-19-2026		

7/14/2026

SHEETZ STORE REBUILD - #62
FROSTBURG, MARYLAND

PRE-CONSTRUCTION DRAINAGE AREA

TRIAD ENGINEERING, INC.
www.triadeng.com

SHEET NUMBER:
DA-1
JOB NO.: 01-24-0390

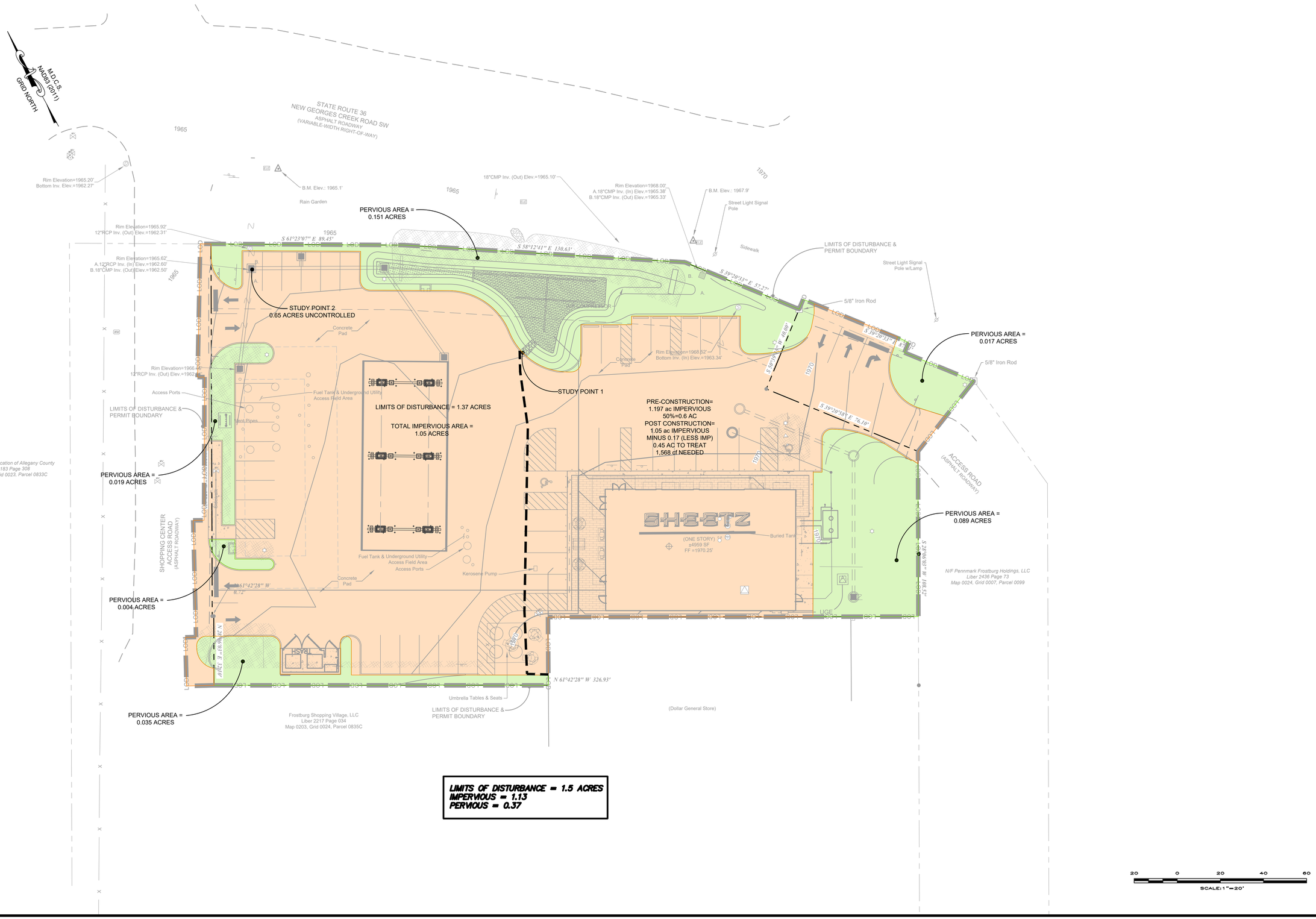

TRIAD ENGINEERING, INC.
1097 CHAPLIN ROAD
MORGANTOWN, WV 26501
PH: 304.296.2562 FAX: 304.296.8739
OFFICE LOCATIONS
MARYLAND • PENNSYLVANIA • VIRGINIA
WEST VIRGINIA • OHIO

REV. #	DATE	DESCRIPTION	BY

CADD FILE: C-01 Cover Sheet.DWG	DRAWN BY: RDB	CHECKED BY: WME
DATE: 06-19-2026	SCALE: AS SHOWN	

7/14/2026

SHEETZ STORE REBUILD - #62
FROSTBURG, MARYLAND

POST-CONSTRUCTION DRAINAGE AREA

TRIAD ENGINEERING, INC.
www.triadeng.com

SHEET NUMBER:
DA-2
JOB NO.: 01-24-0390

SWM & DRAINAGE NOTES

1. STRUCTURAL STEEL GRATES SHALL BE PROVIDED FOR ALL INLETS.
2. CONTRACTOR TO PROVIDE SHOP DRAWINGS FOR ALL STORM SEWER INLETS.
3. AN AS-BUILT DRAWING OF STORM SEWER FACILITIES SHALL BE PREPARED BY THE CONTRACTOR AND SUBMITTED TO THE OWNER UPON COMPLETION OF THE PROJECT.
4. AS-BUILT SWM FACILITIES - INCLUDES FIELD SURVEY, ELEVATIONS AND MATERIAL TICKETS FOR CLAY LINER, STONE, PEA GRAVEL, MEDIA AND PLANTINGS.
4. CONTRACTOR TO PROVIDE INSPECTION REPORTS AND PHOTOS DURING INSTALLATION.
5. CONTRACTOR TO HAVE A DESIGNATED INDIVIDUAL FROM TRIAD ENGINEERING PRESENT DURING CONSTRUCTION OF SWM FACILITIES.
6. ALL STORM SEWER PIPE SHALL BE SOLID-WALL SMOOTH-LINED CORRUGATED POLYETHYLENE PIPE (SLCPP) UNLESS NOTED OTHERWISE. ALL JOINTS AND CONNECTIONS TO INLETS/MANHOLES SHALL BE WATERTIGHT.
7. CONTRACTOR SHALL REFER TO OTHER PLANS WITHIN THIS CONSTRUCTION SET FOR OTHER PERTINENT INFORMATION.

POST-DEVELOPMENT DRAINAGE AREA TABULATION			
DRAINAGE AREA (DA)	IMPERVIOUS (AC)	PERVIOUS (AC)	TOTAL AREA (AC)
BIO-RETENTION AREA 1	.44	.16	0.60

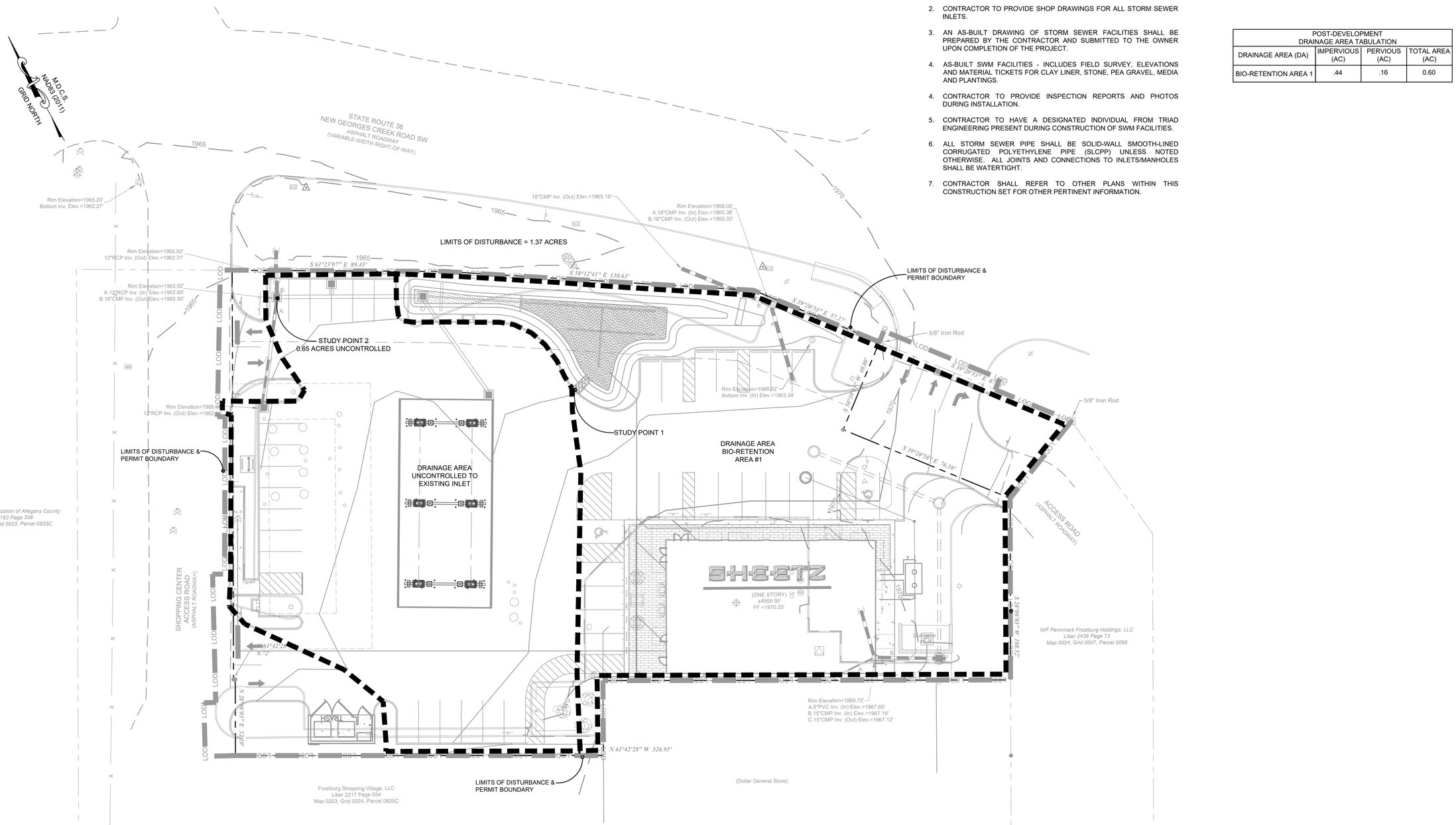

SOIL TYPE ON SITE			
SYMBOL	DESCRIPTION	K FACTOR (WHOLE)	HYDROLOGIC SOILS GROUP
UxB	URBAN LAND, 0 TO 8 PERCENT SLOPES		

20 0 20 40 60
SCALE: 1"=20'

TRIAD ENGINEERING, INC.
1097 CHAPLIN ROAD
MORGANTOWN, WV 26501
PH: 304.296.2562 FAX: 304.296.8739
OFFICE LOCATIONS
MARYLAND • PENNSYLVANIA • VIRGINIA
WEST VIRGINIA • OHIO

REV. #	DATE	DESCRIPTION	BY

CADD FILE: C-01 Cover Sheet.DWG
DRAWN BY: RDB
CHECKED BY: WME
DATE: 06-19-2026
SCALE: AS SHOWN

7/14/2026

SHEETZ STORE REBUILD - #62
FROSTBURG, MARYLAND
STORMWATER MANAGEMENT DRAINAGE AREAS

TRIAD ENGINEERING, INC.
www.triadeng.com

SHEET NUMBER:
SWM-1
JOB NO.: 01-24-0390

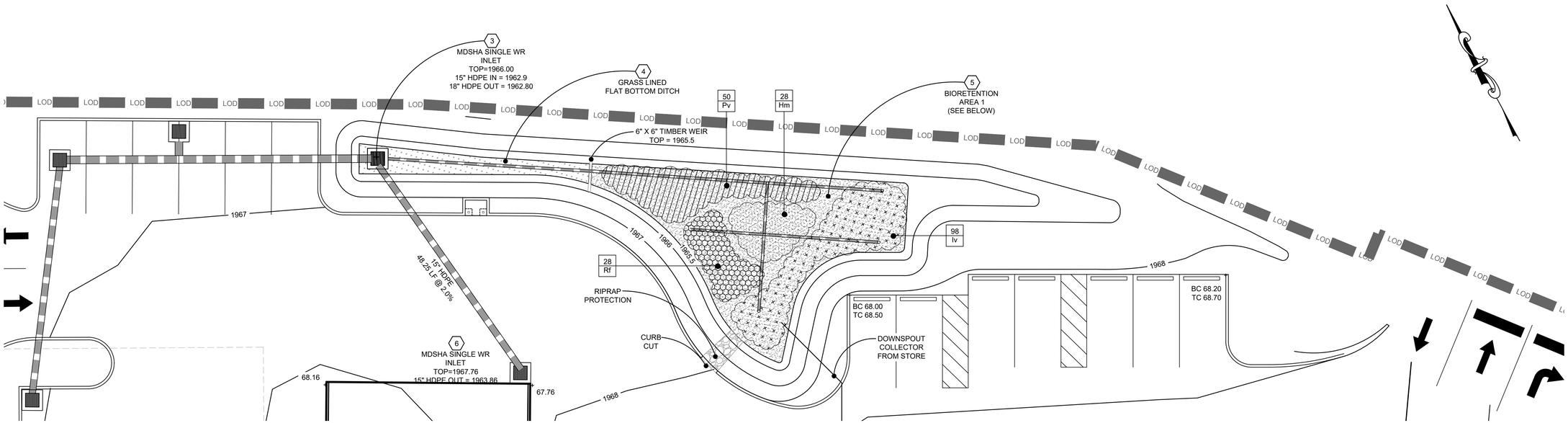

BIO-RETENTION AREA #1 - PLAN
SCALE: 1"=10'

SWM & DRAINAGE NOTES

1. STRUCTURAL STEEL GRATES SHALL BE PROVIDED FOR ALL INLETS.
2. CONTRACTOR TO PROVIDE SHOP DRAWINGS FOR ALL STORM SEWER INLETS.
3. AN AS-BUILT DRAWING OF STORM SEWER FACILITIES SHALL BE PREPARED BY THE CONTRACTOR AND SUBMITTED TO THE OWNER UPON COMPLETION OF THE PROJECT.
4. AS-BUILT SWM FACILITIES - INCLUDES FIELD SURVEY, ELEVATIONS AND MATERIAL TICKETS FOR CLAY LINER, STONE, PEA GRAVEL, MEDIA AND PLANTINGS.
4. CONTRACTOR TO PROVIDE INSPECTION REPORTS AND PHOTOS DURING INSTALLATION.
5. CONTRACTOR TO HAVE A DESIGNATED INDIVIDUAL FROM TRIAD ENGINEERING PRESENT DURING CONSTRUCTION OF SWM FACILITIES.
6. ALL STORM SEWER PIPE SHALL BE SOLID-WALL SMOOTH-LINED CORRUGATED POLYETHYLENE PIPE (SLCPP) UNLESS NOTED OTHERWISE. ALL JOINTS AND CONNECTIONS TO INLETS/MANHOLES SHALL BE WATERTIGHT.
7. CONTRACTOR SHALL REFER TO OTHER PLANS WITHIN THIS CONSTRUCTION SET FOR OTHER PERTINENT INFORMATION.

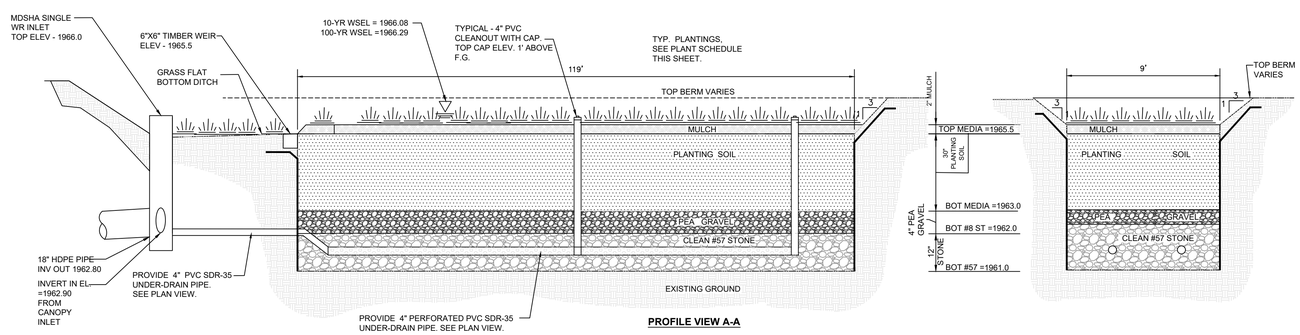

PROFILE VIEW A-A

SECTION B-B

1 **BIORETENTION AREA #1 - TYPICAL SECTION DETAIL**
NTS

PLANT SCHEDULE
BIO RETENTION STRUCTURES

	SYMB.	KEY	COMMON NAME	BOTANICAL NAME	SIZE	QUANTITY	COND	SPACING
PERENNIALS		Hm	'Palace Purple' Heuchera	Heuchera micrantha	3" Pot	28	QT	24" O.C. STAGGERED
		Iv	Blue Flag Iris	Iris versicolor	3" Pot	98	QT	24" O.C. STAGGERED
		Lc	Cardinal Flower	Lobelia Cardinalis	3" Pot	50	QT	24" O.C. STAGGERED
		Rf	Blackeyed Susan	Rudbeckia fulgida var. Fulgida	3" Pot	28	QT	24" O.C. STAGGERED

BIORETENTION SIZING CHART

BMP NUMBER	DA (TO STRUCTURE)	IMPERVIOUS DA (TO STRUCTURE)	POST RCN	POST Tc	POST Pe REQUIRED	POST Pe PROVIDED	VOL. PROVIDED ESD Vol. (cf.)	VOL. PROVIDED Af (sf.)
BRA	0.68 AC.	0.52 AC.	-	.10 / HR	1.0	1.1	1861	744
BRA 1							3808	

BIO-RETENTION AREA #1 - TYPICAL SECTION
NOT TO SCALE

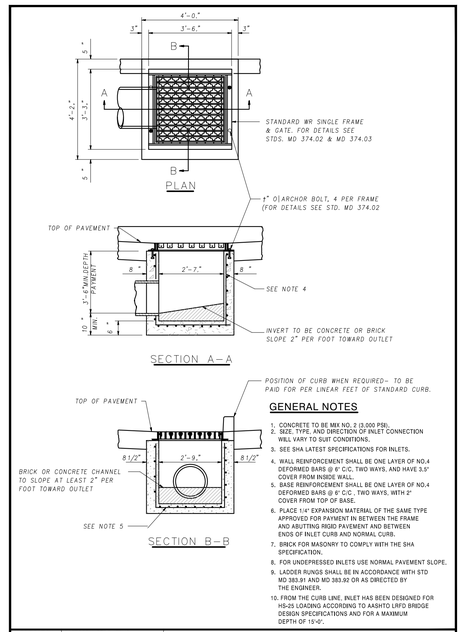

GENERAL NOTES

1. CONCRETE TO BE MIX NO. 2 (3,000 PSI).
2. SIZE, TYPE, AND DIRECTION OF INLET CONNECTION WILL VARY TO SUIT CONDITIONS.
3. SEE SHA LATEST SPECIFICATIONS FOR INLETS.
4. WALL REINFORCEMENT SHALL BE ONE LAYER OF NO.4 DEFORMED BARS @ 6" C/C, TWO WAYS, AND HAVE 3.5" COVER FROM INSIDE WALL.
5. BASE REINFORCEMENT SHALL BE ONE LAYER OF NO.4 DEFORMED BARS @ 6" C.C., TWO WAYS, WITH 2" COVER FROM TOP OF BASE.
6. PLACE 1/4" EXPANSION MATERIAL OF THE SAME TYPE APPROVED FOR PAVEMENT IN BETWEEN THE FRAME AND ABUTTING RIGID PAVEMENT AND BETWEEN ENDS OF INLET CURB AND NORMAL CURB.
7. BRICK FOR MASONRY TO COMPLY WITH THE SHA SPECIFICATION.
8. FOR UNDEPRESSED INLETS USE NORMAL PAVEMENT SLOPE.
9. LADDER RUNGS SHALL BE IN ACCORDANCE WITH STD MD 383.01 AND MD 383.92 OR AS DIRECTED BY THE ENGINEER.
10. FROM THE CURB LINE, INLET HAS BEEN DESIGNED FOR HS-25 LOADING ACCORDING TO ASSHTO LRFD BRIDGE DESIGN SPECIFICATIONS AND FOR A MAXIMUM DEPTH OF 15'-0".

SPECIFICATION 305	CATEGORY CODE ITEMS	Maryland Department of Transportation STATE HIGHWAY ADMINISTRATION STANDARDS FOR HIGHWAYS AND INCIDENTAL STRUCTURES
APPROVED	DIRECTOR — OFFICE OF HIGHWAY DEVELOPMENT	SINGLE WR INLET
SHA State Highway	APPROVAL & REVISIONS: SHA 3-3-75, REVISED 10-1-01, REVISED 10-7-14 / FEDERAL REGIONAL APPROVAL 3-22-75, REVISED 2-29-88, REVISED 9-29-14	STANDARD NO. MD 374.06

SINGLE WR INLET
NOT TO SCALE - STANDARD NO.: MD 374.06

TRIAD ENGINEERING, INC.
1097 CHAPLIN ROAD
MORGANTOWN, WV 26501
PH: 304.296.2562 FAX: 304.296.8739
OFFICE LOCATIONS
MARYLAND • PENNSYLVANIA • VIRGINIA
WEST VIRGINIA • OHIO

REV. #	DATE	DESCRIPTION	BY

CADD FILE: C-01 Cover Sheet.DWG
DRAWN BY: RDB
CHECKED BY: WME
DATE: 06-19-2026
SCALE: AS SHOWN

7/14/2026

SHEETZ STORE REBUILD - #62
FROSTBURG, MARYLAND

STORMWATER MANAGEMENT DETAILS

TRIAD ENGINEERING, INC.
www.triadeng.com

SHEET NUMBER:
SWM-2
JOB NO.: 01-24-0390

B.4.C Specifications for Micro-Bioretention. Rain Gardens, Landscape Infiltration & Infiltration Berms, Bio-Swales

1. **Material Specifications**
The allowable materials to be used in these practices are detailed in Table B.4.1.

2. **Filtering Media or Planting Soil**
The soil shall be a uniform mix, free of stones, stumps, roots or other similar objects larger than two inches. No other materials or substances shall be mixed or dumped within the micro-bioretention practice that may be harmful to plant growth, or prove a hindrance to the planting or maintenance operations. The planting soil shall be free of Bermuda grass, Quackgrass, Johnson grass, or other noxious weeds as specified under COMAR 15.08.01.05.
The planting soil shall be tested and shall meet the following criteria:
Soil Component - Loamy Sand or Sandy Loam (USDA Soil Textural Classification)
Organic Content - Minimum 10% by dry weight (ASTM D 2974). In general, this can be met with a mixture of loamy sand (60%-65%) and compost (35% to 40%) or sandy loam (30%), coarse sand (30%), and compost (40%).
Clay Content - Media shall have a clay content of less than 5%.
pH Range - Should be between 5.5 - 7.0. Amendments (e.g., lime, iron sulfate plus sulfur) may be mixed into the soil to increase or decrease pH.
There shall be at least one soil test per project. Each test shall consist of both the standard soil test for pH, and additional tests of organic matter, and soluble salts. A textural analysis is required from the site stockpiled topsoil. If topsoil is imported, then a texture analysis shall be performed for each location where the topsoil was excavated.

3. **Compaction**
It is very important to minimize compaction of both the base of bioretention practices and the required backfill. When possible, use excavation hoes to remove original soil. If practices are excavated using a loader, the contractor should use wide track or marsh track equipment, or light equipment with turf type tires. Use of equipment with narrow tracks or narrow tires, rubber tires with large lugs, or high-pressure tires will cause excessive compaction resulting in reduced infiltration rates and is not acceptable. Compaction will significantly contribute to design failure. Compaction can be alleviated at the base of the bioretention facility by using a primary tilling operation such as a chisel plow, ripper, or subsoiler. These tilling operations are to refracture the soil profile through the 12 inch compaction zone. Substitute methods must be approved by the engineer. Rototillers typically do not till deep enough to reduce the effects of compaction from heavy equipment.
Rototill 2 to 3 inches of sand into the base of the bioretention facility before backfilling the optional sand layer. Pump any ponded water before preparing (rototilling) base.
When backfilling the topsoil over the sand layer, first place 3 to 4 inches of topsoil over the sand, then rototill the sand/topsoil to create a gradation zone. Backfill the remainder of the topsoil to final grade.
When backfilling the bioretention facility, place soil in lifts 12" to 18". Do not use heavy equipment within the bioretention basin. Heavy equipment can be used around the perimeter of the basin to supply soils and sand. Grade bioretention materials with light equipment such as a compact loader or a dozer/loader with marsh tracks.

4. **Plant Material**
Recommended plant material for micro-bioretention practices can be found in Appendix A, Section A.2.3.

5. **Plant Installation**
Compost is a better organic material source, is less likely to float, and should be placed in the invert and other low areas. Mulch should be placed in surrounding to a uniform thickness of 2" to 3". Shredded or chipped hardwood mulch is the only accepted mulch. Pine mulch and wood chips will float and move to the perimeter of the bioretention area during a storm event and are not acceptable. Shredded mulch must be well aged (6 to 12 months) for acceptance.
Rootstock of the plant material shall be kept moist during transport and on-site storage. The plant root ball should be planted so 1/8th of the ball is above final grade surface. The diameter of the planting pit shall be at least six inches larger than the diameter of the planting ball. Set and maintain the plant straight during the entire planting process. Thoroughly water ground bed cover after installation.
Trees shall be braced using 2" by 2" stakes only as necessary and for the first growing season only. Stakes are to be equally spaced on the outside of the tree ball.
Grasses and legume seed should be drilled into the soil to a depth of at least one inch. Grass and legume plugs shall be planted following the non-grass ground cover planting specifications.
The topsoil specifications provide enough organic material to adequately supply nutrients from natural cycling. The primary function of the bioretention structure is to improve water quality. Adding fertilizers defeats, or at a minimum, impedes this goal. Only add fertilizer if wood chips or mulch are used to amend the soil. Rototill urea fertilizer at a rate of 2 pounds per 1000 square feet.

6. **Underdrains**
Underdrains should meet the following criteria:
- Pipe- Should be 4" to 6" diameter, slotted or perforated rigid plastic pipe (ASTMF 758, Type PS 28, or AASHTO-M-278) in a gravel layer. The preferred material is slotted, 4" rigid pipe (e.g., PVC or HDPE).
- Perforations - If perforated pipe is used, perforations should be 3/8" diameter located 6" on center with a minimum of four holes per row. Pipe shall be wrapped with a 1/4" (No. 4 or 4x4) galvanized hardware cloth.
- Gravel - The gravel layer (No. 57 stone preferred) shall be at least 3" thick above and below the underdrain.
- The main collector pipe shall be at a minimum 0.5% slope.
- A rigid, non-perforated observation well must be provided (one per every 1,0000 square feet) to provide a clean-out port and monitor performance of the filter.
- A 4" layer of pea gravel (1/8" to 3/8" stone) shall be located between the filter media and underdrain to prevent migration of fines into the underdrain. This layer may be considered part of the filter bed when bed thickness exceeds 24".The main collector pipe for underdrain systems shall be constructed at a minimum slope of 0.5%. Observation wells and/or clean-out pipes must be provided (one minimum per every 1000 square feet of surface area).

7. **Miscellaneous**
These practices may not be constructed until all contributing drainage area has been stabilized.

APPENDIX B.4. CONSTRUCTION SPECIFICATIONS FOR ENVIRONMENTAL SITE DESIGN PRACTICES

TABLE B.4.1 MATERIALS SPECIFICATIONS FOR MICRO-BIORETENTION, RAIN GARDENS & LANDSCAPE INFILTRATION

Material	Specification	Size	Notes
Plantings	see Appendix A, Table A.4	n/a	plantings are site-specific
Planting soil [2' to 4' deep]	loamy sand (60 - 65%) & compost (35 - 40%) or sandy loam (30%), coarse sand (30%) & compost (40%)	n/a	USDA soil types loamy sand or sandy loam; clay content < 5%
Organic content	Min. 10% by dry weight (ASTM D 2974)		
Mulch	shredded hardwood		aged 6 months, minimum; no pine or wood chips
Pea gravel	pea gravel: ASTM-D-448	No. 8 or No. 9 (⅛" to ⅜")	
* Curtain drain/gravel slopes/diaphragm	AASHTO M-43	No. 57 or No. 6 aggregate (¾" to ⅜")	
Geotextile		n/a	PE Type 1 nonwoven
Gravel (underdrains and infiltration berms)	AASHTO M-43	No. 57 or No. 6 aggregate (¾" to ⅜")	
Underdrain piping	F 758, Type PS 28 or AASHTO M-278	4" to 6" rigid schedule 40 PVC or SDR 35	Slotted or perforated pipe ⅜" perf. @ 6" on center, 4 holes per row; minimum of 3" of gravel over pipes; not necessary underneath pipes. Perforated pipe shall be wrapped with ¼-inch galvanized hardware cloth
Poured in place concrete (if required)	MSHA Mix No. 3; f'c = 3500 psi @ 28 days, normal weight, air-entrained; reinforcing to meet ASTM-61 5-60	n/a	on-site testing of poured-in-place concrete required: 28 day strength and slump test; all concrete design (cast-in-place or pre-cast) *not using previously-approved State or local standards* requires design drawings sealed by a professional and approved by a professional structural engineer licensed in the State of Maryland - design to include meeting ACI Code 350.R/89; vertical loading [H-10 or H-20]; allowable horizontal loading (based on soil pressures); and analysis of potential cracking
Sand	AASHTO-M-6 or ASTM-C-33	0.02" to 0.04"	Sand substitutions such as Diabase and Graystone (AASHTO #10) are not acceptable. No calcium carbonated or dolomitic sand substitutions are acceptable. No "rock dust" can be used for sand.

* Revised per Washington County Land Development Engineering

MAINTENANCE SCHEDULE

INSPECTION ITEM	FREQUENCY
SOIL	
Inspect and Repair Erosion Damage	Once a Month
Inspect and Repair Rodent/Pest Damage	Once a Month
Repair, Reseed and Remulch Disturbed Areas	As Required
STRUCTURE	
Inspect Oullet Pipe and Riser Structure/Weir Wall	Twice Yearly
PLANTINGS	
Water Grass	Once a Day for the First 14 Days
Remove Invasive Plants/Weeds/Trees	As Needed
Mow Berm and Impound Area	Minimum Once a Month During Season

OPERATION AND MAINTENANCE PLAN - BIORETENTION

INSPECTION ITEM	INSPECTION REQUIREMENTS	REMEDIAL ACTION
Maintenance Access		
General	Check for accessibility to facility; excessive vegetation; surface stability	Repair erosion and maintain access surface in good condition
Pretreatment		
Grass filter strip or sand layer	Check for sediment accumulation	Remove sediment as needed
Optional sand layer	Check sand for staining and sediment accumulation	If contaminated, replace first three inches of sand layer
Gravel diaphragm	Check for sediment accumulation and evidence of erosion	Remove sediment and replace gravel as needed
Mulch layer	Check for a (2-3) inch mulch layer	Remove mulch and replace as needed
Filter Bed		
Dewatering	Check for dewatering within 48 hours of rainfall; noticeable odors; water stains on the filter surface or at the outlet; presence of algae or aquatic vegetation	Remove mulch and the top (3-6) inches of soil/sediment and replace with suitable materials per plan specifications; follow up inspections shall confirm adequate dewatering; contact the plan approval authority if the facility does not function as intended
Sediment	Check for sediment accumulation	Remove sediment as needed
Mulch layer	Check for adequate cover; sediment accumulation; discoloration	Remove and replace mulch and excess sediment as needed
Vegetation		
Plant composition and health	Check for plant composition according to approved plans; invasive species, weeds and dead or dying vegetation	Remove and replace plants as necessary
Vegetative cover/erosion	Check for erosion, runoff channelizing or bare spots	Repair/grade and stabilize as needed
Outlets		
Underdrain system	Check outlet end to ensure that discharge is not obstructed; check for erosion	Remove any flow obstructions; grade and stabilize any eroded areas to provide stable conveyance
Overflow spillway	Check for displacement of rip-rap, stable conveyance and erosion below the outlet	Repair and replace as needed
Conveyance Systems		
General	Check for erosion, flow blockages or bypass and stable conveyance	Repair/replace and stabilize as needed
Flow diversion	Check flow splitter for proper functioning	Repair as necessary
Trash and Debris		
	Check for trash and debris accumulation	Trash and debris shall be disposed of in an acceptable manner
Structural Components		
	Check for structural deterioration, spalling or cracking	Repair according to specifications on the approved plans

1 **BIORETENTION, RAIN GARDEN AND INFILITRATION NOTES, MAINTENANCE AND INSPECTIONS**
NOT TO SCALE

NOTICE OF REQUIRED STORMWATER MANAGEMENT INSPECTIONS
SAND FILTERS, BIORETENTION AND RAIN GARDEN FACILITIES (FOR ALL BIORETENTION AREAS AND MICRO-BIORETENTION AREAS)

The following inspections are required to be performed by the Qualified Professional for the construction of any Sand Filter, Bioretention or Rain Garden Facility. Additional inspections may be needed based on professional engineering judgment. Each inspection is required at the start of each stage.

EXCAVATION OF FACILITY - Prior to excavation, verify sediment and erosion control features are in place to prevent sediment inflow. Verify all flagging required in the area of sensitive area protection. Verify grading is accurately staked-out and re-staked as needed. Facility dimensions shall be verified and soils checked for infiltration. Verify contributing area is permanently stabilized. Verify that water is not present. Ensure roughening of side walls if sheared and sealed by heavy equipment. Verify that compaction of facility base is minimized.			
PLACEMENT OF FILTER CLOTH (Trenches)- Ensure filter fabric is overlapping six (6) inches between strips of cloth. Ensure tree roots or other obstacles are removed from facility walls or sides and base to prevent tearing. Verify that uphill fabric roll overlaps two (2) feet over downhill roll.			
PLACEMENT OF UNDERDRAINS AND OBSERVATION WELLS - Location size, and material of under drain and observation wells shall be verified prior to stone placement. Verify pipe ends capped. Verify 3" gravel cover.			
PLACEMENT OF FILTERING MEDIA - Verify bottom layer material and thickness. Verify sand and/or filter media layer material and thickness. Verify filter fabric or pea gravel used between sand layers. Verify top filter media layer.			
PLACEMENT OF SAND FILTER LAYER OR GRAVEL DIAPHRAGM - Verify depth and width of sand and/or diaphragm layer. Verify fill material.			
STABILIZATION AND LANDSCAPING - Verify site top soiled, seeded and mulched. Verify embankment top soiled and seeded. Verify location, size, type and number of planted landscape material. Verify no more than 1/8 inch root bal exposed. Verify planting stock kept moist during on-site storage. Verify installation location, size, material type of fencing or other safety barriers			

The Qualified Professional may request the presence of a County Construction Standards Inspector at least 24 hours in advance.

2 **BIORETENTION INSPECTIONS**
NOT TO SCALE

TRIAD ENGINEERING, INC.
1097 CHAPLIN ROAD
MORGANTOWN, WV 26501
PH: 304.296.2562 FAX: 304.296.8739
OFFICE LOCATIONS
MARYLAND • PENNSYLVANIA • VIRGINIA
WEST VIRGINIA • OHIO

REV. #	DATE	DESCRIPTION	BY

CADD FILE: C-01 Cover Sheet.DWG
DRAWN BY: RDB
CHECKED BY: WME
DATE: 06-19-2026
SCALE: AS SHOWN

7/14/2026

SHEETZ STORE REBUILD - #62
FROSTBURG, MARYLAND

STORMWATER MANAGEMENT DETAILS

TRIAD ENGINEERING, INC.
www.triadeng.com

SHEET NUMBER:
SWM-3
JOB NO.: 01-24-0390