SUTPHEN

PROPOSAL

TO THE:
City of Escondido Fire Department
Attn: Deputy Chief John Tenger
1163 Centre City Parkway
Escondido, CA 92026

DATE: March 20, 2023

We hereby propose and agree to furnish the following firefighting equipment upon your acceptance of this proposal:

Two (2) Sutphen Extreme Duty Monarch Rescue Pumpers
Complete and Delivered for the Total Sum of $2,105,257.24

CA Sales Tax $163,157.44

Total $2,268,414.68

The units shall be manufactured completely in accordance with the following proposal and delivered in approximately **37-43** months from the date of the contract signing or purchase order, subject to delays from all causes beyond our control.

This proposal price is based on the Sutphen Corporation's Cooperative Purchasing Contract (022818-SUT) with Sourcewell. If the contract or purchase order is not received by **May 31, 2023**, we reserve the right to extend, withdraw, or modify our proposal, including pricing, delivery times, and prepayment discounts as applicable.

Should any changes be required as mandated by NFPA, EPA, or other Federal, State or Local Governments, or changes due to part availability or vendor relationships, such changes shall be documented on a change order and purchaser shall be responsible for additional charges as applicable. These may include but are not limited to changes that affect the major vendors of the fire apparatus industry such as pump manufacturer, seat manufacturer, electrical power supplies (generators) and powertrain (engine & transmission).

Respectfully submitted,

Scott Barratt

Scott Barratt
Republic Fire Equipment LLC **(CA Dealer #03868)**

Authorized Representative for
Sutphen Corporation

REPUBLIC FIRE EQUIPMENT

SUTPHEN™

FAMILY OWNED
SINCE 1890

Prepayment Discount Options
For The
Escondidio, CA

3/20/2023

Current Bid Price **$2,105,267.24**

Option 1	For a prepayment in the amount of			$526,316.81	the discount
25%	would be	$31,579.01	for a total selling price of		$2,073,688.23
Option 2	For a prepayment in the amount of			$1,052,633.62	the discount
50%	would be	$63,158.02	for a total selling price of		$2,042,109.22
Option 3	For a prepayment in the amount of			$1,578,950.43	the discount
75%	would be	$94,737.03	for a total selling price of		$2,010,530.21
Option 4	For a full prepayment, we offer a discount of			$126,316.03	
100%	for a final selling price of				$1,978,951.21

NOTE: For any option above, the prepayment would be due within 30 days of contract signing in order to receive the discounts listed. Any remaining balance would be due at the time of delivery.

Sutphen Corporation
PO Box 158 • Amlin, OH 43002-0158
6450 Eiterman Road • Dublin, OH 43016-8711
Tel 614 889-1005 • **Toll Free** 800 848-5860 • **Fax** 614 889-0874
www.sutphen.com • Sutphen@sutphencorp.com

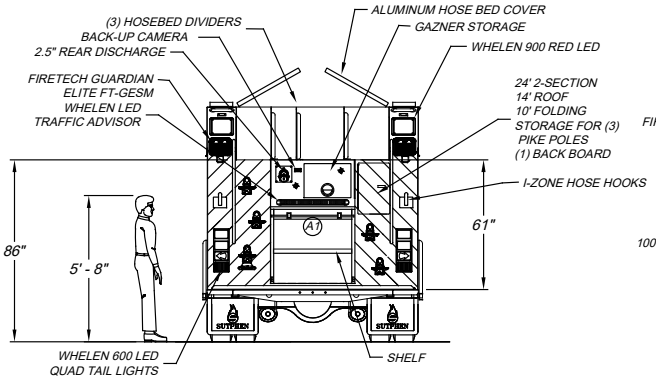

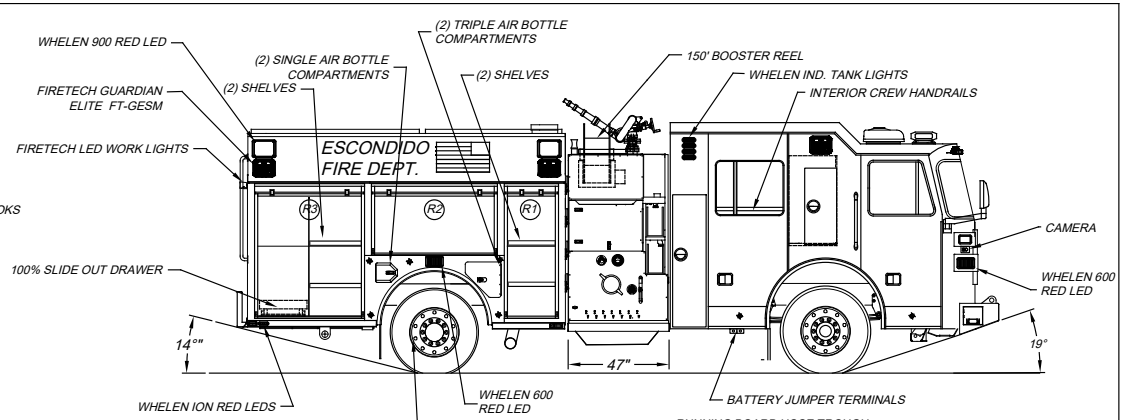

LEFT SIDE COMPARTMENTATION				
COMPT	DOORS	INSIDE DIMENSIONS	DOOR OPENING DIMENSIONS	VOLUME
L1	ROLL-UP	25"W X 66"H X 26"D	22 1/2"W X 56 1/2"H	24.8 CU. FT.
L2	ROLL-UP	59"W X 31 1/2"H X 26"D	56 1/4"W X 27"H	28.4 CU. FT.
L3	ROLL-UP	51 1/2"W X 66"H X 26"D	48 3/4"W X 56 1/2"H	47.4 CU. FT.
L4/L5	LIFT-UP	74"W X 13.5"H X 19"D	67"W X 9.5"H	22 CU. FT.

RIGHT SIDE COMPARTMENTATION					
COMPT	DOORS	INSIDE DIMENSIONS	DOOR OPENING DIMENSIONS	VOLUME	
R1	ROLL-UP	25"W X 66"H X 26"D	22 1/2"W X 56 1/2"H	18.9 CU. FT.	11" DEEP, UPPER
R2	ROLL-UP	59"W X 31 1/2"H X 11"D	56 1/4"W X 27"H	13.7 CU. FT.	
R3	ROLL-UP	51 1/2"W X 66"H X 26"D	48 3/4"W X 56 1/2"H	36 CU. FT.	11" DEEP, UPPER
L4/L5	LIFT-UP	74"W X 13.5"H X 19"D	67"W X 9.5"H	22 CU. FT.	

REAR STEP COMPARTMENT				
COMPT	DOORS	INSIDE DIMENSIONS	DOOR OPENING DIMENSIONS	VOLUME
A1	ROLL-UP	39 1/2"W X 40"H X 31"D	36 3/4"W X 30"H	31.2 CU. FT.

BASE STORAGE: 200 CU. FT.
TOTAL STORAGE: 306 CU. FT.

CAB COMPARTMENTATION				
COMPT	DOORS	INSIDE DIMENSIONS	DOOR OPENING DIMENSIONS	VOLUME
D SIDE EMS	HINGED	21"W X 40"H X 22"D	14 3/4"W X 36"H	10.7 CU. FT.
O SIDE EMS	HINGED	59"W X 31 1/2"H X 11"D	14 3/4"W X 36"H	10.7 CU. FT.
D CAB SIDE	HINGED	14 3/4"W X 59 5/8"H X 22 1/2"D	12 5/8"W X 58 5/8"H	11.4 CU. FT.
O CAB SIDE	HINGED	14 3/4"W X 59 5/8"H X 21"D	12 5/8"W X 58 5/8"H	10.7 CU. FT.
SEAT BOX	NONE	51 1/2"W X 13 1/2"H X 21 5/8"D	NONE	8.6 CU. FT.
OVERHEAD	HINGED	80 3/4"W X 10 1/4"H X 19 3/4"D	25 1/4" W X 7" H X 3 DOORS	9.5 CU. FT.

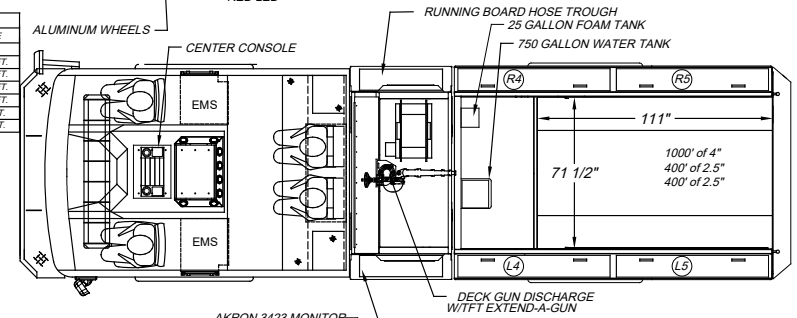

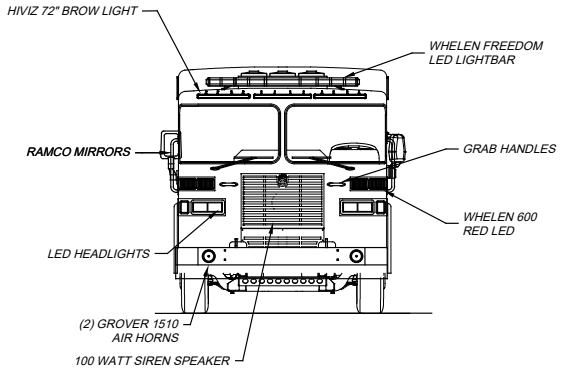

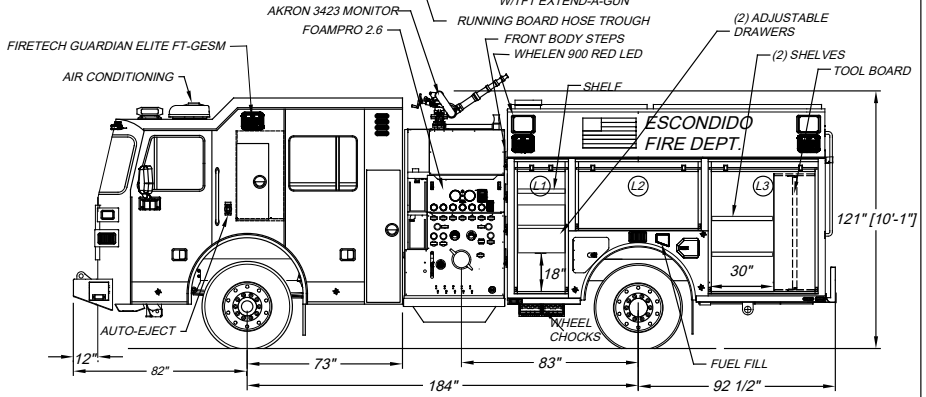

DIMENSIONS SHOWN ON THIS DRAWING ARE APPROXIMATE AND ARE SUBJECT TO MINOR DEVIATIONS DURING CONSTRUCTION.

IN THE EVENT OF A DISCREPANCY BETWEEN THE SUTPHEN SPECIFICATIONS AND DRAWING, THE SUTPHEN SPECIFICATIONS SHALL PREVAIL.

DRAWING IS FOR REFERENCE ONLY. SOME ITEMS PROPOSED MAY NOT BE SHOWN OR NOTED.

CUSTOMER APPROVAL

NAME:

TITLE:

DATE:

REV.	DESCRIPTION	BY	DATE
C	ADED CAB COMPARTMENT DIMENSIONS	R.C.	8/22/2022
B	UPDATED TO SHOP ORDER REV B	R.C.	8/18/2022
A	UPDATED TO SHOP ORDER REV A	R.C.	4/22/2022

THIS PRINT IS PROVIDED ON A RESTRICTED BASIS AND IS NOT TO BE USED IN ANY WAY DETRIMENTAL TO THE INTEREST OF SUTPHEN CORPORATION.

DRAWN BY: R.CAMPBELL
DATE: 4/11/22
MFG. FACILITY: URBANA

SUTPHEN

ESCONDIDO, CITY OF
ESCONDIDO, CA

PROGRAM 1 CUSTOM PUMPER

DWG. NO.: HS-7380,81,82

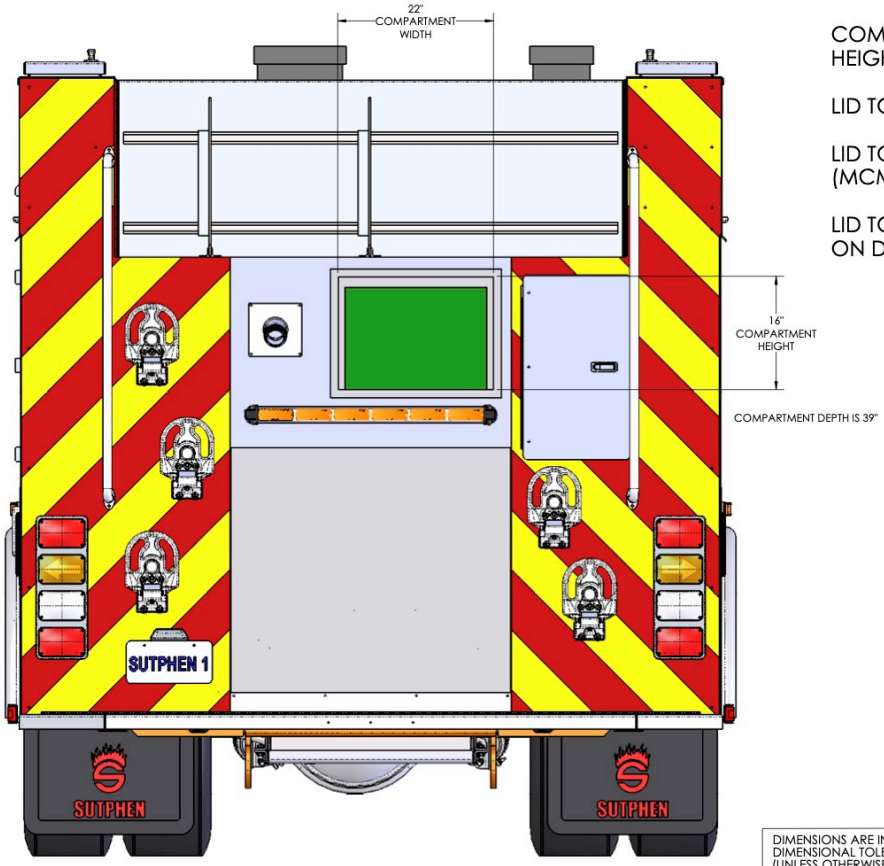

COMPARTMENT TO HAVE FULL WIDTH FULL HEIGHT LID.

LID TO OPEN UPWARDS.

LID TO HAVE LIFT TO RELEASE DOOR PROP (MCMASTER P/N:11615A11).

LID TO HAVE D-RING HANDLE CENTERED LOW ON DOOR

-	RELEASE TO CUSTOMER		4/20/2022	BAJ
REV	DESCRIPTION	ECN #	DATE	BY

DIMENSIONS ARE IN INCHES
DIMENSIONAL TOLERANCES
(UNLESS OTHERWISE NOTED)

.XX = ±.06	ANGLE = ±1°
.XXX = ±.031	FRACT = ±1/16

MATERIAL
MATERIAL THICKNESS =
FINISH
WEIGHT 29125.6 LBS

CONFIDENTIAL: THIS DOCUMENT IS THE CONFIDENTIAL AND PROPRIETARY PROPERTY OF SUTPHEN CORPORATION. THE USE, REPRODUCTION OR DISCLOSURE, IN WHOLE OR IN PART, OF THE DOCUMENT OR THE INFORMATION CONTAINED THEREIN, IS STRICTLY PROHIBITED WITHOUT PRIOR, WRITTEN AUTHORIZATION OF SUTPHEN CORPORATION.

SUTPHEN CORPORATION
FIRE APPARATUS SINCE 1890
6450 EITERMAN ROAD
DUBLIN, OH 43016 800-848-5860

DESCRIPTION: HS-7380-82 OVER A1 COMPARTMENT

AX Item Number | DOCUMENT NUMBER | SHEET 1 OF 1

Sutphen **Component Report** **Dealership: Republic Fire Equipment_2**	**HS- City of Escondido, California Program 1 Pumper** **Order#: DQ14822-1** **Contact: Chris Arnold** **Position: Fire Captain/App Com. Lead** **Phone: 760-839-5400** **Mobile: 760-310-4894** **Email: carnold@escondido.org**

Bill To	Ship To
Customer: City of Escondido **Contact: Jeramiah Jennings – Fleet Superintendent** **Address: 201 N. Broadway** **Escondido, California 92025**	**Customer: City of Escondido Fleet Services/Public Works** **Contact: Jeramiah Jennings – Fleet Superintendent** **Address: 475 N. Spruce** **Escondido, California 92025**

Comments
Project Manager: **Sales Person: Scott Barratt – Republic Fire Equipment** **Revision Level:** **Truck Type:** **Body Facility:**

Quote Line Number 1

Line	Item #	Qty	Item Description/Comments
1		1	**ENG Pump Module Series = Program Module
2		1	**ENG Facility = Urbana Pumper Division
3		1	**ENG Truck Series = Program 1
4		1	**ENG Electrical System = Point-to-Point
5	Sourcewell	1	Cooperative Purchasing = Sourcewell 022818-SUT
6	10000230	1	DETAILED WIRING SCHEMATIC (USB)
7	10088888	1	SPECIAL ITEM, Reference HS-7380 through 7382
8	10001200	1	MAXIMUM APPARATUS HEIGHT = As low as possible
9		1	**ENG Overall Apparatus Height = 10' 1" +/- 2".
10	10001220	1	MAXIMUM APPARATUS LENGTH = As short as possible
11		1	**ENG Overall Apparatus Length = 30' 2" +/- 2".

Line	Item #	Qty	Item Description/Comments
12	10310100	1	CHASSIS
			CHASSIS
13	10010006	1	CHASSIS, CUSTOM
14		1	**ENG Modified Wheelbase
15	51070184	1	Wheelbase = 184
16		1	**ENG AF Number = TBD
17	25010100	1	FRAME, 10" DOUBLE RAILS, SINGLE AXLE (50K PSI)
18	45040100	1	FRONT BUMPER CLIP
19	45010001	1	FRONT TOW EYES, BELOW BUMPER, PAINTED
20	45030220	1	ADDITIONAL FRONT TOW EYES, TOP OF BUMPER, PAINTED
21	46010000	1	REAR TOW EYES, PAINTED
22	40010250	1	STEERING - ROSS TAS-85
23	22010050	1	DRIVE LINE, SPICER, 1810 SERIES
24	54088888	1	SPECIAL ITEM, MERITOR DCDL
25		1	**CLAR NOTES, Rear Axle will have MERITOR DCDL (DRIVER CONTROLLED DIFFERENTIAL LOCK) with dash mounted control. Rocker Switch = Lower Console Position 2. Feedback signal light to dash.
26	23015100	1	ENGINE, CUMMINS X 10 450HP DOC-DPF-DEF-SCR OBD
27	23030006	1	AIR INTAKE/EMBER SEPARATOR
28	23031176	1	FUEL FILTER/WATER SEPARATOR, PRIMARY, FLEETGUARD FUEL PRO FH230
29	23031220	1	FUEL FILTER, SECONDARY, FLEETGUARD, FF5825NN
30	23088888	1	SPECIAL ITEM, FILTER, CUMMINS, REMOTE MOUNTED
31		1	**CLAR NOTES, Cummins Remote Oil Filter kit will be provided and installed on the X10 engine. This will improve access in proximity to the frame rail for fleet personnel, speeding oil change time. Exact location TBD preconstruction conference.
32	47012525	1	TRANSMISSION, ALLISON GEN 6, EVS4000R W/RETARDER (X SERIES)

Line	Item #	Qty	Item Description/Comments
33	23110000	1	JACOBS ENGINE BRAKE
34	47024050	1	TRANSMISSION COOLER
35	47030000	1	ALLISON TOUCH PAD SHIFTER
36	47030110	1	SHIFTER PAD GEARING, 6 GEARS OPEN
37	21021200	1	COOLING SYSTEM
38	21030195	1	COOLANT FILTER
39	21030000	1	FAN CLUTCH
40	21030200	1	RADIATOR COOLANT RECOVERY, PRESSURIZED SYST
41	47088888	1	SPECIAL ITEM, Allison T-Handle Shifter
42		1	**CLAR NOTES, An Allison T-Handle Shifter shall be provided. Reference HS-5451.
43		1	**CLAR NOTES, IN LUEU OF STANDARD CONTROLS, A FOOT PEDAL RETARDER CONTROL WILL BE PROVIDED . REFERENCE HS7380. REFERENCE HS7380. ITEM# 47088888. ON/OFF ROCKER SWITCH = LOWER CONSOLE POSITION #2.
44	26010000	1	FUEL TANK, STEEL, 65 GALLON
45	26030000	1	FUEL FILL
46	26030100	1	FUEL COOLER
47	24040000	1	DIESEL EXHAUST FLUID TANK
48		1	**ENG DEF Access = Hinged Door for DEF Access.
49	13028888	1	SPECIAL Alternator SPECIAL ALTERNATOR, C.E. NIEHOFF 400 AMP
50		1	**CLAR NOTES, SPECIAL ALTERNATOR, C.E. NIEHOFF 400 AMP SPECIAL ALTERNATOR, C.E. NIEHOFF 400 AMP, WILL BE PROVIDED. Item # 13012125.
51	13030100	1	LOW VOLTAGE ALARM, FLOYD BELL TXB-V86-515-QF
52	15010500	1	BATTERIES, INTERSTATE TYPE 31 MHD (4)

Line	Item #	Qty	Item Description/Comments
53	15030300	1	KUSSMAUL STARTGUARD
54	15031700	1	BATTERY JUMPER TERMINALS
55	15031888	1	SPECIAL Battery Charger SPECIAL BATTERY CHARGER, KUSSMAUL LPC 1200 W/REMOTE BAR GRAPH DISPLAY
56		1	**ENG Battery Charger Note: Chassis Division to provide/install battery charger & Auto Eject (if applicable)
57	15030430	1	120V SHORELINE INLET, KUSSMAUL SUPER 20 AUTO EJECT, 90° OPENING COVER 091-55-20-120
58		1	**ENG Shoreline Inlet Location = Driver's side of Cab, standard location.
59		1	**ENG Shoreline Cover Color = Red.
60		1	**ENG Shoreline Cover Opening = Half-Open (90 Degrees)
61	14022120	1	FRONT AXLE, HENDRICKSON STEERTEK NXT 20,000 LB.
62	41022120	1	FRONT SUSPENSION, HENDRICKSON 20,000 LBS. (4) 56" LEAFS
63	41040510	1	STEER ASSIST
64	43010305	1	FRONT TIRES, GOODYEAR 385/65R22.5 LRJ G296 22.5 x 12.25 WHEELS
65	14510520	1	REAR AXLE, MERITOR RS-24-160 24,000 LB.
66	14530100	1	TOP SPEED, 68 MPH
67	42010010	1	REAR SUSPENSION, FIREMAAX 24,000 LBS. AIR RIDE
68	44010308	1	REAR TIRES, GOODYEAR 12R22.5 X 8.25 LRH ENDURANCE RSA HIGHWAY 24,000 - 27,000 GVWR
69	42910300	1	TIRE PRESSURE MONITOR, QUICK PRESSURE
70	44210100	1	WHEELS, ALUM, ACCURIDE (max 27K rear)
71	44270100	1	HUB COVERS, FRONT & REAR, POLISHED STS (Single Axle)
72	44270300	1	CHROME LUG NUT CAPS, FRONT & REAR (Single Axle)
73	44271100	1	MUD FLAPS, FRONT (PAIR)
74	44271200	1	MUD FLAPS, REAR (PAIR)
75	54010010	1	DATA, SAFETY & WARNING TAGS APPLICATION, ADHESIVE
76	16010265	1	BRAKES STEERTEK DISC PLUS EX225 FRONT, MERITOR DISC PLUS EX225 REAR (SINGLE AXLE)

Line	Item #	Qty	Item Description/Comments
77	18010041	1	AIR BRAKE SYST 4 TANKS WABCO 1200 DRYER (24K, 27K)
78	18030010	1	AIR BRAKE RELEASE VALVE, WABCO
79	18020000	1	CENTRAL LOCATION FOR AIR TANK DRAINS
80		1	**ENG Specify Central Location for Air Tank Drain Valves = Under L1 Compartment
81	18030140	1	AIR INLET CONNECTION
82		1	**ENG Standard Air Inlet Location = Left hand side of Driver's step well.
83	18030150	1	AUXILIARY AIR INLET CONNECTION
84		1	**ENG Air Inlet Location = STANDARD LOCATION = LEFT HAND SIDE OF DRIVER'S STEP WELL.
85	18033000	1	KUSSMAUL 091-28 AIR EJECT W/FEM COUPLING
86		1	**ENG Air Eject Location = Determined at Pre-Con.
87		1	**ENG Air Eject Cover Color = Yellow.
88	18035110	1	AIR COMPRESSOR, KUSSMAUL AUTO PUMP AC, 100PSI
89	18220500	1	NO ELEC STABILITY CONTROL SYS
90	18110050	1	WABCO 4 CHANNEL ANTI-LOCK BRAKES W/ASR (24K, 27K)
91	53510000	1	COMPRESSION FITTINGS ON AIR SYSTEM (CHASSIS)
92	54010000	1	MISCELLANEOUS ITEMS ON CHASSIS
93	54088888	1	SPECIAL ITEM, SPECIAL ITEM, AIR BRAKE SYST 4 TANKS, BENDIX AD-IP AIR DRYER
94		1	**CLAR NOTES, SPECIAL ITEM, AIR BRAKE SYST 4 TANKS, BENDIX AD-IP AIR DRYER A SPECIAL ITEM, AIR BRAKE SYST 4 TANKS, BENDIX AD-IP AIR DRYER WILL BE PROVIDED. REFERENCE HS-7380. ITEM # 18088888.
95	10310110	1	CAB
			CAB
96	11023250	1	CAB TSAL4E 73" 10" RR 1/2
97	11030025	1	CAB CERTIFICATION - STRUCTURAL INTEGRITY

Line	Item #	Qty	Item Description/Comments
98	11030950	1	CAB LOCKDOWN LATCHES
99	11031025	1	CAB TILT SYSTEM, AIR CONTROL VALVE
100		1	**ENG Cab Tilt Controls = Officer's side Pump Panel.
101	11031100	1	MANUAL BACK-UP TILT SYSTEM
102	11031355	1	CAB DOORS, BARRIER STYLE (4)
103	11031365	1	LOWER CAB STEP WELLS, RAPTOR (BLACK) & TREADPLATE BACK & SIDE WALLS (EA) (4)
104	11031387	1	CAB STEPS, LOWER GRIP STRUT, INTERMEDIATE DIAMONDPLATE
105	11031399	1	CAB STEP LIGHTING, TECNIQ E45 LED STRIP LIGHTS
106	11031421	1	CAB DOOR WINDOWS, POWER (4)
107	11031400	1	DELETE CAB SIDE WINDOWS
108	11031460	1	NO WINDOWS, BACK WALL OF CAB
109	11031465	1	WINDOW TINTING (LIMO TINT 8%) - EACH (2)
110	52010010	1	ELECTRIC INTERMITTENT WIPERS
111	52030200	1	WINDSHIELD WASHER RESERVOIR
112	38028888	1	SPECIAL Mirror RAMCO Heated & Remote RGT Cowl MNT LFT Door MOunt
113		1	**CLAR NOTES, Ramco, Heated & Remote Mirrors
114	11024405	1	UPPER GRILLE, LEVEL STYLE FACADE (X SERIES)
115	11024510	1	FLAMING “S” LOGO, UPPER GRILLE, ILLUMINATED
116	11024615	1	LOWER GRILLE, POLISHED STAINLESS, LASER CUT LETTERING W/ BACKLIGHTING
117		1	**ENG Design for lower grille w/LED backlight = "SUTPHEN" Blue LED. (Note: Text cannot be larger than air cut-outs.)
118	32588888	1	SPECIAL ITEM, ELECTRIC KEYLESS ENTRY DOOR LOCKS
119		1	**CLAR NOTES, ELECTRIC KEYLESS ENTRY DOOR LOCKS Electric keyless entry door locks will be provided.

Line	Item #	Qty	Item Description/Comments
120	32588888	1	SPECIAL ITEM, KEYLESS ENTRY OVERRIDE
121		1	**CLAR NOTES, KEYLESS ENTRY OVERRIDE Keyless entry override will be provided.
122	32588888	1	SPECIAL ITEM, SPECIAL ITEM, (2) TWO SWITCHES, DRIVER CONTROLS, CAB DOOR LOCK/UNLOCK, BODY DOOR LOCK/UNLOCK
123		1	**CLAR NOTES, SPECIAL ITEM, (2) TWO SWITCHES, DRIVER CONTROLS, CAB DOOR LOCK/UNLOCK, BODY DOOR LOCK/UNLOCK WILL BE PROVIDED. (2) MOMENTARY SWITCHES, LOCATION = UPPER CONSOLE #1. 1 FOR CAB, 1 FOR BODY. REFERENCE HS-7380. ITEM # 32588888.
124	20028888	1	SPECIAL Bumper BUMPER, 12" WUI, PAINTED FORMED STEEL CHANNEL
125		1	**CLAR NOTES, SPECIAL ITEM, 12" WUI BUMPER, WILL BE PROVIDED. NO STORAGE WELL, W/ ANGLED TOW EYES OUT THE TOP, PAINTED JOB COLOR. BUMPER SIDES, PAINTED STEEL, W/POCKET (12_ 24" EXTENSION). A BLACK PROTECTIVE RAPTOR COATING WILL BE PROVIDED, ALONG THE TOP EDGE OF BUMPER. REFERENCE HS-7380, ITEM# 20028888.
126		1	**ENG Siren Speaker Perforations = No Speaker Perforations in Bumper.
127	20029830	1	BUMPER SIDES, PAINTED STEEL, W/POCKET (12-24" EXTENSION)
128	20042140	1	PROTECTIVE BUMPER COATING, RAPTOR, TOP EDGE OF FRONT BUMPER
129		1	**ENG Protective Bumper Coating Color = Black.
130	12028888	1	SPECIAL Air Horns SPECIAL ITEM, AIR HORNS, DUAL AIR HORNS, 1 HADLEY H00871A ROUND 24.5", 1 HADLEY ROUND, 19", THRU BUMPER
131		1	**CLAR NOTES, SPECIAL ITEM, AIR HORNS, DUAL AIR HORNS, 1 HADLEY H00871A ROUND 24.5", 1 HADLEY ROUND, 19", THRU BUMPER WILL BE PROVIDED. REFERENCE HS-7380. ITEM #32588888.
132		1	**ENG Air Horns Location: Outboard, (1) each side.
133	12030088	1	SPECIAL Air Horn Cutout AIR HORN CUTOUTS THRU BUMPER, ROUND, NO PERFORATIONS
134		1	**CLAR NOTES, AIR HORN CUTOUTS THRU BUMPER, ROUND, NO PERFORATIONS. PRICING INCLUDED IN WUI BUMPER UP CHARGE. REFERENCE HS-7380. ITEM# 12030025.
135	12030205	1	AIR HORNS WIRED TO STEERING WHEEL BUTTON
136	12040010	1	MOMENTARY SWITCH ON DASH, OFFICER'S SIDE

Line	Item #	Qty	Item Description/Comments
137	12510109	1	ELEC SIREN, WHELEN 295HFSA7, REMOTE FLUSH MOUNT WITH REMOVABLE MIC
138	12620200	1	SIREN SPEAKER, 100W, WHELEN, SA314B, BLACK FINISH
139	12670110	1	SIREN SPEAKER(S) INSTALLED BEHIND CAB GRILLE
140	32520520	1	HEADLIGHTS, LED, FIRETECH FT-4X6, DUAL STS HOUSINGS
141		1	**ENG Headlight Interior Finish = Chrome.
142	48010300	1	FRONT TURN SIGNALS, WHELEN 400 SERIES LED (4)
143	32530700	1	DAYTIME RUNNING LIGHTS
144	32530754	1	ICC, LED BROW LIGHT INTEGRATED MARKERS
145	27022130	1	HANDRAILS, CAB EXTERIOR, KNURLED STAINLESS STEEL (2) SIDE
146	27030610	1	COAT HOOKS ON UPPER GRAB HANDRAILS, DRIVER'S SIDE (1)
147	27030650	1	COAT HOOKS ON UPPER GRAB HANDRAILS, OFFICER'S SIDE (1)
148	27030710	1	HANDRAILS, FRONT OF CAB, KNURLED STAINLESS STEEL (PAIR)
149	27025000	1	HANDRAILS, CAB INTERIOR, BLACK RUBBER COATED (2) FRONT ENTRY
150	27025510	1	HANDRAILS, CAB INTERIOR, KNURLED STAINLESS STEEL (2) REAR ENTRY
151	27030120	1	HANDRAILS, REAR CAB INTERIOR DOOR, BLACK RUBBERIZED (2) AND KNURLED STS AT WINDOW (2)
152	27040100	1	INTERIOR DOOR, NYLON STRAP
153	11032021	1	EXTERIOR COMPT, SIDE OF EXT CAB, 66" H, DS
154	11032410	1	EXTERIOR COMPARTMENT DOOR LOCK
155	11032200	1	INTERIOR ACCESS, NOT PROVIDED
156	11032110	1	OPENING TO DRIVER'S SIDE CREW SEAT COMPT
157	11032071	1	EXTERIOR COMPT, SIDE OF EXT CAB, 66" H, OS
158	11032410	1	EXTERIOR COMPARTMENT DOOR LOCK
159	11032200	1	INTERIOR ACCESS, NOT PROVIDED
160	11032120	1	OPENING TO OFFICER'S SIDE CREW SEAT COMPT

Line	Item #	Qty	Item Description/Comments
161	11035420	1	DIAMONDPLATE CAB ROOF 30" x FULL WIDTH
162	31010285	1	INTERIOR, MULTISPEC BLACK SPECKLE PAINT W/GRAY-BLACK DURAWEAR
163	11032929	1	DOOR PANEL, FULL STS
164	90600220	1	REFLECTIVE MATL, INTERIOR CAB DOORS, CHEVRONS, REFLEXITE
165		1	**ENG Reflective Striping Color = MATCH REAR CHEVRON AND HS-7380.
166		1	**ENG Reflective Striping Verbiage = "SUTPHEN"
167	31010291	1	CAB INTERIOR FLOOR COVERING, BLACK RUBBERIZED
168	22510100	1	ENGINE ENCLOSURE, FULL LENGTH
169	22510530	1	ENGINE ENCLOSURE COVERING, SCORPION BLACK URETHANE BLEND
170	11031680	1	CENTER CONSOLE W/MAP BOOK STORAGE, TOP OF ENGINE ENCLOSURE
171	22610055	1	ENGINE HOOD LIGHT, LED (2)
172	11031509	1	GLOVE BOX, FDNY STYLE
173	11031702	1	UPPER CREW DOOR AREA, GLOVE BOX HOLDERS (FLAT BACK)
174	31088888	1	SPECIAL ITEM, SPECIAL ITEM, Clip Board on glove box cover
175		1	**CLAR NOTES, Clip Board On Glove Box Door A stainless steel clipboard will be attached to the glove box door. Reference HS-7380.
176	31088888	1	SPECIAL ITEM, SPECIAL ITEM, BULLARD QXT BUNDLE
177		1	**CLAR NOTES, BULLARD THERMAL IMAGER QXT BUNDLE A Bullard QXT Bundle Thermal Imager Red/Black with Truck mount will be provided and mounted in cab. Exact location tbd precon.
178	31088888	1	SPECIAL ITEM, SPECIAL ITEM, COMMUNICATIONS EQUIPMENT
179		1	**CLAR NOTES, COMMS EQUIPMENT: - MOTOROLA APX6500 05 800MHZ HEAD UNITS (TWO) - ANTENNA FOR ABOVE LAIRD A8063 800-896 MHZ 3db, OPEN COIL MOBILE ANTENNA 14" - KENWOOD NX5700 VHF HEAD UNIT (TWO HEAD UNITS) - ANTENNA FOR ABOVE MWV1365S 136-174 MHZNO TUNE WIDEBAND VHF ANTENNA 21"

Line	Item #	Qty	Item Description/Comments
180	31088888	1	SPECIAL ITEM, SPECIAL ITEM, ENGINE HOOD LIGHT, (LED) 1 FIRETECH, FT-CU-AQX WHITE HOUSING WIRED BATTERY HOT
181		1	**CLAR NOTES, SPECIAL ITEM, ENGINE HOOD LIGHT, (LED) 1 FIRETECH, FT-CU-AQX WHITE HOUSING, WILL BE PROVIDED. IT WILL BE WIRED BATTERY HOT. REFERENCE HS-7380. ITEM # 22610050.
182	29810100	1	CHASSIS ELECTRICAL DESCRIPTION
183	30010130	1	INSTRUMENTATION, AMETEK W/ CENTER & OVERHEAD CONSOLES
			Upper Command Console:
184		1	**ENG Overhead Console Panel's Finish: Black Wrinkle.
185		1	**ENG Overhead Console Position 1 #1 MASTER EMERGENCY #2 FRONT SCENE #3 LEFT SCENE #4 RIGHT SCENE #5 REAR SCENE #6 WORK LIGHTS #7 LEFT ALLEY LIGHT #8 RIGHT ALLEY LIGHT #9 CAB LOCK/UNLOCK #10 BODY LOCK/UNLOCK
186		1	**ENG Overhead Console Position 2 TRAFFIC ADVISOR CONTROL HEAD
187		1	**ENG Overhead Console Position 3 HVAC CONTROLS, CAMERA MONITOR BELOW HVAC.
188		1	**ENG Overhead Console Position 4 CHASSIS INDICATORS, DOOR OPEN INDICATORS, SEAT BELT MONITOR, DECK GUN
189		1	**ENG Overhead Console Position 5 FIRECOM CONTROL HEAD
190		1	**ENG Overhead Console Position 6 STEREO AM/FM/WB/BT
191		1	**ENG Overhead Console Position 7 STACKED MOTOROLA ON BOTTOM KENWOOD ON TOP
192	30010508	1	LOWER COMMAND CONSOLE, X10HD
193		1	**ENG Lower Command Console Finish: Black Urethane.
194		1	**ENG Lower Console Panel's Finish: Black Wrinkle.

Line	Item #	Qty	Item Description/Comments
195		1	**ENG Lower Console Position 1 TRANSMISSION T-HANDLE SHIFTER, PARK BRAKE TO THE LEFT OF T-SHIFTER.
196		1	**ENG Lower Console Position 2 #1 JAKE BRAKE ON/OFF #2 JAKE BRAKE HI/MED/LOW #3 TRANS RETARDER #4 HIGH IDLE #5 CITY HORN/AIR HORN #6 DCDL ACTIVATION #7 ASR SWITCH
197		1	**ENG Lower Console Position 3 SIREN HEAD MOUNTED LOW POWER POINTS NOTED BELOW
198		1	**ENG Lower Console Position 4 BLANK
199		1	**ENG Lower Console Position 5 #1 MASTER EMERGENCY #2 AIR HORN #3 FRONT SCENE #4 LEFT SCENE #5 RIGHT SCENE #6 REAR SCENE #7 BLANK
200	30010710	1	CAB PUMP SHIFTER, AIR (FOR HALE G-SERIES / WATEROUS C20 PUMP TRANSMISSION)
201	30011000	1	PUMP INTERLOCK, NOT CONNECTED WITH ODOMETER
202	30031610	1	DO NOT MOVE LIGHT, WHELEN TIR3 LED
203		1	**ENG Details for Door Ajar Light = COLOR = RED LENS COLOR = CLEAR BEZEL = BLACK
204		1	**ENG Door Ajar Light Location = Centered below upper command console.
205	29930200	1	MAPBOOK SLOT ON BREAKER PANEL
206	29910100	1	PROGRAMMABLE LOAD MANAGER, CLASS-1 SUPERNODE II
207	30031100	1	HIGH IDLE SWITCH
208	11040000	1	CAB ACCESSORY FUSE PANEL
209	84541540	1	POWER & GROUND STUDS, UPPER COMMAND CONSOLE
210		1	**ENG Requirements (AMPS) for Power/Ground Studs in Upper Command Console: (1) 12-volt 60-amp, direct to the battery ignition off. (1) 12-volt 30-amp switched battery first position on ignition switch. (1) 12-volt 30-amp ignition power second position on ignition switch. (1) 12-volt 125-amp ground.

Line	Item #	Qty	Item Description/Comments
211	84541545	1	POWER & GROUND STUDS, LOWER COMMAND CONSOLE
212		1	**ENG Requirements (AMPS) for Power/Ground Studs in Lower Command Console: (1) 12-volt 60-amp, direct to the battery. (1) 12-volt 30-amp controlled by the ignition switch. (1) 12-volt 125-amp ground.
213	84541550	1	POWER & GROUND STUDS, UNDER OFFICER'S SEAT
214		1	**ENG Requirements (AMPS) for Power/Ground Studs Under Officers Seat: (1) 12-volt 40-amp controlled by the battery switch. (1) 12-volt 60-amp controlled by the ignition switch. (1) 12-volt 60-amp, direct to the battery. (1) 12-volt 100-amp ground.
215	30110000	1	VEHICLE DATA RECORDER, AKRON/WELDON
216	30088888	1	SPECIAL ITEM, SPECIAL ITEM, POWER 7 GROUND STUDS FORWARD OVERHEAD STORAGE, DRIVERS SIDE
217		1	**CLAR NOTES, SPECIAL ITEM, MOVE POWER & GROUND STUDS FROM UNDER OFFICER'S SEAT TO FORWARD OVERHEAD STORAGE, DRIVERS SIDE. REFERENCE HS-7380. ITEM #84588888. There shall be a minimum of four (4) threaded power studs provided to accommodate the future installation of two-way radio BRAINS. The studs shall be wired as follows: • One (1) 12-volt 40-amp controlled by the battery switch • One (1) 12-volt 60-amp controlled by the ignition switch • One (1) 12-volt 60-amp, direct to the battery • One (1) 12-volt 100-amp ground
218	30088888	1	SPECIAL ITEM, SPECIAL ITEM, UPGRADE 12V USB POWER POINTS TO KUSSMAUL 091-264-N, (3)
219		1	**CLAR NOTES, SPECIAL ITEM, UPGRADE 12V USB POWER POINTS TO KUSSMAUL 091-264-N, (3) USB POWER POINT LOCATION #1 = LOWER CONSOLE POSITION 3, DRIVER'S CORNER USB POWER POINT LOCATION #2 = LOWER CONSOLE POSITION 3, OFFICER'S CORNER USB POWER POINT OCATION #3 = FORWARD FACING CREW SEAT BOX, BETWEEN SEATS
220	30088888	1	SPECIAL ITEM, SPECIAL ITEM, RELOCATE PUMP SHIFT, LEFT OF STEERING COLUMN UNDER DASH
221		1	**CLAR NOTES, SPECIAL ITEM, RELOCATE PUMP SHIFT, LEFT OF STEERING COLUMN UNDER DASH. REFERENCE HS-7380.
222	33510030	1	INTERIOR CAB LIGHTS, WHELEN 6" ROUND RED/CLEAR LED (2)
223	34010030	1	INTERIOR CREW LIGHTS, WHELEN 6" ROUND RED/CLEAR LED (2)
224	28010750	1	DEFROSTER, HEATER & A/C, SEVERE CLIMATE (TM-31)

Line	Item #	Qty	Item Description/Comments
225	28090003	1	HEAT TO FEET
226	28090100	1	A/C TO FACE
227	28030500	1	DEFROSTER DUCTWORK, ENTIRE WINDSHIELD
228	11031687	1	TOP HEAT/AC STORAGE, TOOL MOUNTING PLATE, 25” x 19.5”
229	38528888	1	SPECIAL Driver's Seat DRIVER'S SEAT, BOSTROM SIERRA HIGH BACK AIR RIDE ABTS (VINYL PLUS, LOW SEAM)
230		1	**CLAR NOTES, SPECIAL ITEM, DRIVER'S SEAT, BOSTROM SIERRA HIGH BACK AIR RIDE ABTS (VINYL PLUS, LOW SEAM), GRAY VINYL.
231	38320000	1	HELMET STORED IN COMPARTMENT
232	39028888	1	SPECIAL Officer's Seat OFFICER'S SEAT, BOSTROM SIERRA 500 HIGH BACK ABTS AIR RIDE (VINYL PLUS, LOW SEAM)
233		1	**CLAR NOTES, SPECIAL ITEM, DRIVER'S SEAT, BOSTROM SIERRA HIGH BACK AIR RIDE ABTS (VINYL PLUS, LOW SEAM), GRAY VINYL.
234	39030020	1	OFFICER’S SEAT COMPT, FRONT DOOR
235	38320000	1	HELMET STORED IN COMPARTMENT
236	11031842	1	EMS CABINET, REAR FACING, EXTERIOR HINGED
237	11032410	1	EXTERIOR COMPARTMENT DOOR LOCK
238	11032200	1	INTERIOR ACCESS, NOT PROVIDED
239	11032315	1	ADJUSTABLE SHELVES, NOT PROVIDED
240	11031842	1	EMS CABINET, REAR FACING, EXTERIOR HINGED
241	11032410	1	EXTERIOR COMPARTMENT DOOR LOCK
242	11032200	1	INTERIOR ACCESS, NOT PROVIDED
243	11032315	1	ADJUSTABLE SHELVES, NOT PROVIDED
244	39528888	1	SPECIAL Crew Seat 3 Air Ride Non SCBA Seat VINYL Plus Low Seam
245		1	**CLAR NOTES, Special Crew Seat Non SCBA VINYL Plus Low Seam Special crew seat non scba VINYL plus low seam. Reference HS-7380.

Line	Item #	Qty	Item Description/Comments
246	38320000	1	HELMET STORED IN COMPARTMENT
247	39528888	1	SPECIAL Crew Seat 4 Air Ride Non SCBA Seat VINYL Plus Low Seam
248		1	**CLAR NOTES, Special Crew Seat AIR RIDE Non SCBA VINYL Plus Low Seam Special crew seat AIR RIDE, non scba VINYL plus low seam. GRAY VINYL. Reference HS-7830. Reference HS-6403 Buckeye AZ.
249	38320000	1	HELMET STORED IN COMPARTMENT
250	39550100	1	SEAT COLOR, GRAY
251	38410000	1	SEAT BELT WARNING SYSTEM, AKRON / WELDON
252	39710015	1	CREW SEAT COMPT, FRONT DROP-DOWN DOORS (73" CAB)
253	39588888	1	SPECIAL ITEM, SPECIAL ITEM, CREW SEAT COMPT, BOLT ON REMOVABLE PANELS WITH GASKET SEALS (73” CAB).
254		1	**CLAR NOTES, SPECIAL ITEM, CREW SEAT COMPT, BOLT ON REMOVABLE PANELS WITH GASKET SEALS (73” CAB). REFERENCE HS-7380. ITEM#39710019. THIS IS FOR ACCESSING THE TRANSVERSE AREA UNDER THE SEATS IF EQUIPMENT GETS STUCK., WHILE RETAINING CLEAN CAB CONCEPT.
255	11031745	1	OVERHEAD STORAGE, FRONT OF 10" RR W/DOORS
256	84541601	1	MOUNTING OF CUSTOMERS RADIO-DUAL HEAD
257		1	**ENG Radio Make & Model = - MOTOROLA APX6500 05 800 MHZ & KENWOOD NXS5700 VHF
258		1	**ENG Radio Head Mounting Location = Overhead Command Console Position 7.
259		1	**ENG Radio Unit Mounting Location = Under Officer's Seat. (Remote Head Radio)
260	84541700	2	INSTALLATION OF CUSTOMERS 2-WAY RADIO ANTENNA (2)
261		1	**ENG Antenna Termination Location #1 = Under Officer's Seat. (Remote Head Radio)
262		1	**ENG Antenna Termination Location #2 = TBD @ Precon.
263	30080150	1	HD STEREO, JENSEN, AM/FM/WB/BT
264	84560230	1	CAMERA SYSTEM, SAFETY VISION SV-CLCD0-70 (WIRED)
265		1	**ENG Camera Mounting Location Rear of Body.
266		1	**ENG Camera Monitor Mounting Location TBD @ Precon.

Line	Item #	Qty	Item Description/Comments
267	11088888	1	SPECIAL ITEM, SPECIAL ITEM, FIRECOM WIRED INTERCOM SYSTEM
268		1	**CLAR NOTES, SPECIAL ITEM, FIRECOM WIRED INTERCOM SYSTEM 4 - USER FIRECOM WIRED INTERCOM SYSTEM WIRED INTERCOM, FIRECOM 5200D, DUAL RADIOS, 4 POSITION (2) UH-51 WIRED HEADSET UNDER HELMET RADIO TRANSMIT (2) 10069919 (2) UH-54 WIRED HEADSET UNDER HELMET ON/OFF INTERCOM (2) 10069921 (1) 5200D DIGITAL INTERCOM 2 RADIO (1) AX 10082417 (4) 107-0407-10 HM-10 HEADSET MODULE SINGLE (4) AX 10049676 (4) ANGER HOOK, YELLOW NFPA FOR HEADSET (4) AX 10069178 (10) 351-0002-07 RJ CONN 6 POSITION PLUG 6P6C CRIMP ON PLUG (1) 108-0102-00 CABLE 6C FLAT 150’ SPOOL (1) AX 10003503 110-5136-30 1 MR-52X,MOTOROLA, 4 FT. Motorola AXP 6500 (1) AX 10052464 110-5160-30 1 MR-60X, KENWOOD,TK5710,ACC.PORT (1) AX XXXXXXXX (2) 15’-extension extends standard 4’ MR Cable to 19’ (2) AX 10102512 Control Head Location = Upper Console Position #5
269		1	**CLAR NOTES, --Stereo to have recessed speakers above driver and officer
270	10310200	1	PUMP & PLUMBING
			PUMP & PLUMBING
271	60080022	1	PUMP, HALE QMAX XS 2000 GPM SINGLE STAGE
272	60025000	1	GEARBOX, HALE, G-SERIES, REAR MOUNTED
273	60025960	1	PUMP GEARBOX YOKE, 1810
274	60026025	1	MECHANICAL PUMP SEAL, HALE (PRG)
275	60031005	1	ALLOY ANODES, HALE (2)
276	60035123	1	PUMP TEST, THIRD PARTY TESTING
277	61510000	1	AUXILIARY COOLER (HEAT EXCHANGER)
278	62010002	1	STAINLESS STEEL PIPING
279	66090010	1	3" TANK-TO-PUMP W/CHECK VALVE
280	61729120	1	VALVE, AKRON, HEAVY DUTY
281	61770900	1	ACTUATOR, VALVE, PUSH/PULL, CLASS 1

Line	Item #	Qty	Item Description/Comments
282	73090001	1	TANK FILL 2"
283	61729120	1	VALVE, AKRON, HEAVY DUTY
284	61770900	1	ACTUATOR, VALVE, PUSH/PULL, CLASS 1
285	61090009	1	PRESSURE GOVERNOR, FIRE RESEARCH, PUMP BOSS
286	61290020	1	INTAKE PRESSURE CONTROL, TFT A1860
287		1	**CLAR NOTES, SET @ 150PSI.
288	63021500	1	6" MAIN SUCTION, LEFT SIDE
289	63035100	1	TFT BALL INTAKE VALVE
290		1	**ENG TFT Ball Valve Part Number = TFT, JUMBO BIV 4.0”F X 6.0”FAX7HNP-NX
291	65090000	1	2.5" LEFT SIDE INLET
292	61729120	1	VALVE, AKRON, HEAVY DUTY
293	61770905	1	ACTUATOR, VALVE, SWING CONTROL
294	60036010	1	THREADS, NST
295	63025500	1	6" MAIN SUCTION, RIGHT SIDE
296	63035100	1	TFT BALL INTAKE VALVE
297		1	**ENG TFT Ball Valve Part Number = TFT, JUMBO BIV RC 4.0"F X 6.0"FAX7HNP-NX-RC, REMOTE CONTROL, REMOTE MOUNTED ON DRIVER PANEL
298	64090000	1	2.5" RIGHT SIDE INLET
299	61729120	1	VALVE, AKRON, HEAVY DUTY
300	61770905	1	ACTUATOR, VALVE, SWING CONTROL
301	60036010	1	THREADS, NST
302	70525900	1	2.5" DISCHARGE, LEFT - POSITION 1
303	61729120	1	VALVE, AKRON, HEAVY DUTY
304	61770915	1	ACTUATOR, VALVE, PUSH/PULL, CLASS 1 W/ RACK & SECTOR
305	77090000	1	GAUGE, DISCH, CLASS 1 2.5"

Line	Item #	Qty	Item Description/Comments
306	61810150	1	DISCHARGE TERMINATION, 30 DEGREE ELBOW
307	60036010	1	THREADS, NST
308	61840100	1	ADAPTER, 2.5"NST FE X 1.5" NST M W/CAP & CHAIN
309	70525900	1	2.5" DISCHARGE, LEFT - POSITION 2
310	61729120	1	VALVE, AKRON, HEAVY DUTY
311	61770915	1	ACTUATOR, VALVE, PUSH/PULL, CLASS 1 W/ RACK & SECTOR
312	77090000	1	GAUGE, DISCH, CLASS 1 2.5"
313	61810150	1	DISCHARGE TERMINATION, 30 DEGREE ELBOW
314	60036010	1	THREADS, NST
315	61840100	1	ADAPTER, 2.5"NST FE X 1.5" NST M W/CAP & CHAIN
316	71025900	1	2.5" DISCHARGE, RIGHT - POSITION 3
317	61729120	1	VALVE, AKRON, HEAVY DUTY
318	61770900	1	ACTUATOR, VALVE, PUSH/PULL, CLASS 1
319	77090000	1	GAUGE, DISCH, CLASS 1 2.5"
320	61810150	1	DISCHARGE TERMINATION, 30 DEGREE ELBOW
321	60036010	1	THREADS, NST
322	61840100	1	ADAPTER, 2.5"NST FE X 1.5" NST M W/CAP & CHAIN
323	71025908	1	3" DISCHARGE W/4" OUTLET, RIGHT - POSITION 4
324	61729160	1	VALVE, AKRON, SLOW CLOSE
325	61770900	1	ACTUATOR, VALVE, PUSH/PULL, CLASS 1
326	77090000	1	GAUGE, DISCH, CLASS 1 2.5"
327	61810160	1	DISCHARGE TERMINATION, STRAIGHT
328	60036010	1	THREADS, NST
329	71590000	1	DISCHARGE, 2.5" LEFT REAR

Line	Item #	Qty	Item Description/Comments
330	61729120	1	VALVE, AKRON, HEAVY DUTY
331	61770900	1	ACTUATOR, VALVE, PUSH/PULL, CLASS 1
332	77090000	1	GAUGE, DISCH, CLASS 1 2.5"
333	61810150	1	DISCHARGE TERMINATION, 30 DEGREE ELBOW
334	60036010	1	THREADS, NST
335	61840100	1	ADAPTER, 2.5"NST FE X 1.5" NST M W/CAP & CHAIN
336	72590002	1	DECK GUN DISCHARGE 3"
337	61729160	1	VALVE, AKRON, SLOW CLOSE
338	61770900	1	ACTUATOR, VALVE, PUSH/PULL, CLASS 1
339	77090000	1	GAUGE, DISCH, CLASS 1 2.5"
340	72570110	1	DECK GUN TERMINATION, FLANGED
341	72554800	1	MONITOR, AKRON APOLLO 3423 W/QUAD STACKED TIPS & STREAM SHAPER
342	72570200	1	EXTEND-A-GUN, TASK FORCE TIPS XG18, MANUAL
343	72890005	1	CROSSLAY, ONE 2.5" & SPEEDLAYS, TWO 2" W/SWIVELS & POLY LIFT-OUT TRAYS
344		1	**ENG Crosslay Hose Load Requirement = 2.5" Crosslay 200' 2.5" DJ Two Speedlays 150' each of 1.75" DJ
345	61729120	3	VALVE, AKRON, HEAVY DUTY (3)
346	61770900	3	ACTUATOR, VALVE, PUSH/PULL, CLASS 1 (3)
347	77090000	3	GAUGE, DISCH, CLASS 1 2.5" (3)
348	60036010	3	THREADS, NST (3)
349	72854500	2	ADDITIONAL POLY TRAY (EA) (2)
350	72910807	1	COVERS, ALUM/WEBBING FOR CROSSLAY/SPEEDLAY
351		1	**ENG Crosslay/Speedlay Side Covers Color = Black.
352	72932230	1	COVER FASTENERS, METAL AIRPLANE LATCHES

Line	Item #	Qty	Item Description/Comments
353		1	**ENG Specify details for side covers: Number of flaps, fasteners & and how they terminate (manufacturer's discretion or customer specified?) = CROSSLAY/SPEEDLAY COVER'S, Two (2) cover's per side. Reference HS- 7380.
354	84090003	1	BOOSTER REEL, LOW PRESSURE, W/150' OF 1" HOSE & NOZZLE, MTD IN DUNNAGE AREA (SM)
355	61729120	1	VALVE, AKRON, HEAVY DUTY
356	61770930	1	ACTUATOR, VALVE, AIR, W/ TOGGLE SWITCH
357	60036010	1	THREADS, NST
358		1	**ENG Booster Reel Nozzle = Special
359		1	**ENG Booster Reel Nozzle, Special = Booster Reel Nozzle = TFT BUBBLE CUP DS1024BCP
360	80488888	1	SPECIAL ITEM, SPECIAL ITEM, ADD SECOND SET OF BOOSTER REEL ROLLERS AND A SECOND REWIND SWITCH
361		1	**CLAR NOTES, LOCATION = OFFICER'S SIDE DUNNAGE AREA. SPECIAL ITEM, ADD SECOND SET OF BOOSTER REEL ROLLERS AND A SECOND REWIND SWITCH
362		1	**CLAR NOTES,
363	61742000	1	MASTER PUMP DRAIN, MULTIPORT
364	61790510	11	DRAIN VALVES, HALE, LIFT-UP (11)
365	10310210	1	FOAM SYSTEM
			FOAM SYSTEM
366	73570305	1	FOAM SYSTEM, FOAMPRO 2001, 2.6 GPM
367		1	**ENG Class of Foam = Class A Foam
368	73531400	1	FOAM TANK 25 GALLON BUILT INTO BOOSTER TANK
369	73588888	1	SPECIAL ITEM, Foam Capable Discharges (6)
370		1	**CLAR NOTES, FOAM CAPABLE DISCHARGES (5) Customer desires the following discharges be foam capable: Booster Reel 2.5" Transverse Pre-connect Upper Speedlay Lower Speedlay Rear 2.5" Discharge

Line	Item #	Qty	Item Description/Comments
			Customer is aware system will not supply all of these discharges accurately as system is 2.6 gpm.
371	10310220	1	PUMP PANEL
			PUMP PANEL
372	74914130	1	PRG SM3 - SIDE MOUNT PUMP PANEL (CROSSLAY/SPEEDLAYS)
373	74928130	1	PUMP MODULE LENGTH, 51"
374	74929130	1	HALE PUMP MODULE CONFIGURATION, SIDE MOUNT, CROSSLAY W/ SPEEDLAYS
375	74930730	1	PANEL FINISH, BLACK POWDERCOAT (PRG)
376		1	**ENG Pump Panel Label Verbiage Standard = Yes.
377	74931055	1	COLOR CODING (PRG)
378		1	**ENG Color Coding Standard = Yes.
379	74931290	1	PUMP MODULE FRAMEWORK, SWIRL FINISH
380	74931390	1	PUMP FINISH, PAINTED BY PUMP MFG
381	74931590	1	PLUMBING FINISH, NON-PAINTED
382		1	**ENG Non-Painted Plumbing = Stainless steel welds shall be treated/coated.
383	74931692	1	EXTERIOR DUNNAGE AREA PANEL, BLACK POWDERCOAT
384	75088888	1	SPECIAL ITEM, SPECIAL ITEM, 47" PUMP PANEL
385		1	**CLAR NOTES, SPECIAL ITEM, 47" PUMP PANEL SPECIAL ITEM, 47" PUMP PANEL DUE TO MECHANICAL SEALS.
386	75040230	1	FLOATING TROUGH IN RUNNING BOARD, BOTH SIDES
387		1	**ENG Running Board Trough Cover = Velcro Straps.
388	75088888	1	SPECIAL ITEM, 45° on both ends of each trough, Drain holes in each trough, Relief cut outs at Main Drain Valve for easy removal
389		1	**CLAR NOTES, SPECIAL ITEM, FLOATING TROUGH IMPROVEMENTS 45° on both ends of each trough, Drain holes in each trough, Relief cut outs at Main Drain Valve for easy removal.

Line	Item #	Qty	Item Description/Comments
390	75590010	1	PUMP OPERATOR LIGHTS, LED (PRG)
391	75590110	1	PUMP PANEL LIGHTS OFFICER'S SIDE, LED (PRG)
392	76090002	1	PUMP PANEL GAUGES & CONTROLS (PRG)
393	60090030	1	PUMP PRIMER, TRIDENT, AIR
394	60028310	1	(1) PRIMER BUTTON - MAIN SUCTION
395	76025110	1	COMPRESSION FITTINGS ON AIR SYSTEM (PRG PUMP MODULE)
396	76031960	1	AIR OUTLET, BOTH SIDES OF PUMP PANEL, WITH 25' OF HOSE
397	76030900	1	HALE TRV-L THERMAL RELIEF VALVE WITH LIGHT AT PUMP PANEL
398	76031900	1	AIR HORN PUSH BUTTON SWITCH ON PUMP PANEL
399	75588888	1	SPECIAL ITEM, Air Horn Switch, Both Sides
400		1	**CLAR NOTES, Both Pump Panels (Driver & Officers side) to have an Air Horn push button switch, to be labeled EVACUATION.
401	76590000	1	GAUGES, MASTER, CLASS 1 4.5" (PRG)
402	77590000	1	GAUGE, WATER LEVEL, CLASS 1, INTELLI-TANK ITL-4
403	77590040	1	GAUGE, FOAM LEVEL, CLASS 1, INTELLI-TANK ITL-4
404		1	**ENG Class of Foam for Foam Gauge = Class A.
405	76588888	1	SPECIAL ITEM, TWO WHELEN 500 LED MONSTER GAUGES
406		1	**CLAR NOTES, WHELEN 500 SERIES LED MONSTER GAUGES Two (2) Whelen 500 series LED Monster Gauges (Multicolor), will be provided and installed, one on each side of cab, behind crew door high.
407	10310230	1	WATER TANK
			WATER TANK
408	83525200	1	WATER TANK BRAND, UPF
409	83590004	1	WATER TANK, 750 GAL, POLY
410	10310300	1	BODY

Line	Item #	Qty	Item Description/Comments
			BODY
411	80089500	1	BODY SUBFRAME, PROGRAM 1 PUMPER
412	80189520	1	BODY G2 - ALUM 40/51 LAD CHUTE
413	80245012	1	UPPER HATCH COMPARTMENT, LEFT & RIGHT SIDES
414	10310302	1	BODY COMPARTMENTS
			BODY COMPARTMENTS
			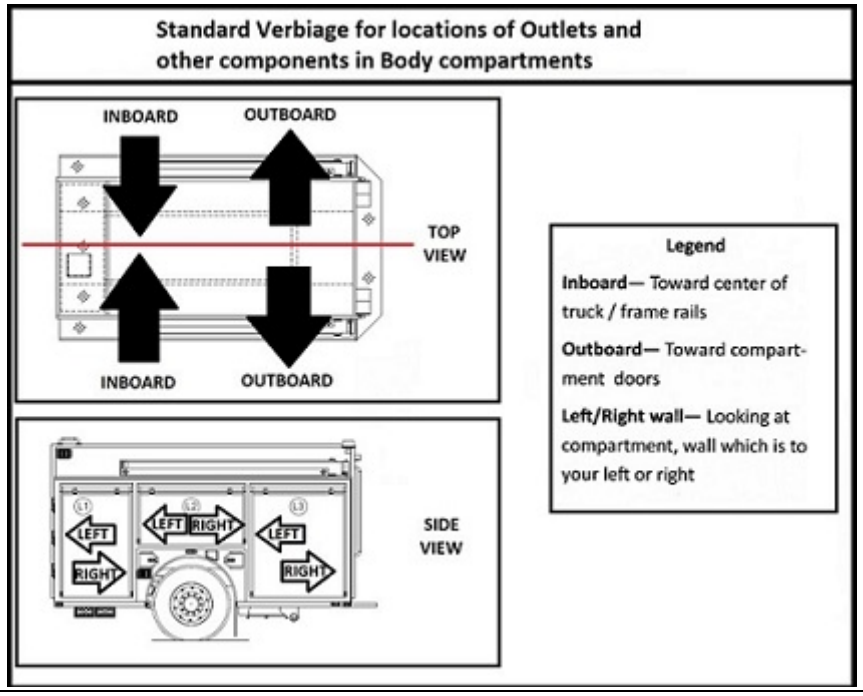
415	81130200	1	ADJUSTABLE SHELF [L1] (1)
416	81150100	2	250# ROLL OUT DRAWER ADJUSTABLE TRACK [L1] (2)
417	80250100	1	TURTLE TILE ON COMPT FLOOR, SHELF, TRAY OR DRAWER [L1] (1)
418	80280410	1	3/16" ALUMINUM MOUNTING PLATE (PER WALL) [L1] (1)
419	80588888	1	SPECIAL ITEM, SPECIAL ITEM, LAYOUT DESCRIPTION
420		1	**CLAR NOTES, SPECIAL ITEM, LAYOUT DESCRIPTION Shelf Located above Drawers. Located 18” from the floor will be a 12” Drawer, then above this drawer there will be a 10” Drawer. 3/16" ALUMINUM BACKING PLATE; Location = Back Wall.

Line	Item #	Qty	Item Description/Comments
421	80250100	1	TURTLE TILE ON COMPT FLOOR, SHELF, TRAY OR DRAWER [L2] (1)
422	80280410	1	3/16" ALUMINUM MOUNTING PLATE (PER WALL) [L2] (1)
423	80588888	1	SPECIAL ITEM, LAYOUT DESCRIPTION
424		1	**CLAR NOTES, LAYOUT DESCRIPTION 3/16" ALUMINUM BACKING PLATE, Location = Back Wall
425	81130200	2	ADJUSTABLE SHELF [L3] (2)
426	81140100	1	FIXED VERTICAL DIVIDER [L3] (1)
427	81150000	1	250# ADJUSTABLE VERTICAL SLIDE-OUT PANEL [L3] (1)
428	80250100	1	TURTLE TILE ON COMPT FLOOR, SHELF, TRAY OR DRAWER [L3] (1)
429	80280410	2	3/16" ALUMINUM MOUNTING PLATE (PER WALL) [L3] (2)
430	80588888	1	SPECIAL ITEM, LAYOUT DESCRIPTION
431		1	**CLAR NOTES, LAYOUT DESCRIPTION TWO (2) ADJUSTABLE SHELFS, Location = to the left of the fixed divider FIXED VERTICAL DIVIDER, Located 30” from Left wall 250# Adjustable Slide-Out Panel, Centered to the right of fixed vertical divider. 3/16" ALUMINUM BACKING PLATE, Location = Tool Board 1 per side
432	81130200	2	ADJUSTABLE SHELF [R1] (2)
433	80250100	1	TURTLE TILE ON COMPT FLOOR, SHELF, TRAY OR DRAWER [R1] (1)
434	80280410	1	3/16" ALUMINUM MOUNTING PLATE (PER WALL) [R1] (1)

Line	Item #	Qty	Item Description/Comments
435	81088888	1	SPECIAL ITEM, LAYOUT DESCRIPTION
436		1	**CLAR NOTES, LAYOUT DESCRIPTION ADJUSTABLE SHELFS, 1 = Shallow 1 = Full 3/16" ALUMINUM MOUNTING PLATE (PER WALL) [R1] (1), Location = Back Wall, High
437	81088888	1	SPECIAL ITEM, SPECIAL ITEM, BOXED IN OPENNING BETWEEN R1 AND R2 COMPARTMENT, UP TO 10" WIDE X UP TO 24" TALL
438		1	**CLAR NOTES, SPECIAL ITEM, BOXED IN OPENING BETWEEN R1 AND R2 COMPARTMENT, UP TO 10" WIDE X UP TO 1 24" TALL, FOR LONG HANDLE TOOLS.
439	80250100	1	TURTLE TILE ON COMPT FLOOR, SHELF, TRAY OR DRAWER [R2] (1)
440	80280410	1	3/16" ALUMINUM MOUNTING PLATE (PER WALL) [R2] (1)
441	81088888	1	SPECIAL ITEM, LAYOUT DESCRIPTION
442		1	**CLAR NOTES, LAYOUT DESCRIPTION 3/16" ALUMINUM MOUNTING PLATE (PER WALL) [R2] (1), Location = Back Wall
443	81088888	1	SPECIAL ITEM, SPECIAL ITEM, BOXED IN OPENNING BETWEEN R2 AND R3 COMPARTMENT, UP TO 10" WIDE X UP TO 24" TALL
444		1	**CLAR NOTES, SPECIAL ITEM, BOXED IN OPENING BETWEEN R2 AND R3 COMPARTMENT, UP TO 10" WIDE X UP TO 1 24" TALL, FOR LONG HANDLE TOOLS.
445	81130200	2	ADJUSTABLE SHELF [R3] (2)
446	81140100	1	FIXED VERTICAL DIVIDER [R3] (1)
447	81150305	1	600# SLIDE-MASTER TRAY, 100% SLIDEOUT [R3] (1)
448	80250100	1	TURTLE TILE ON COMPT FLOOR, SHELF, TRAY OR DRAWER [R3] (1)
449	80280410	1	3/16" ALUMINUM MOUNTING PLATE (PER WALL) [R3] (1)
450	81088888	1	SPECIAL ITEM, LAYOUT DESCRIPTION

Line	Item #	Qty	Item Description/Comments
451		1	**CLAR NOTES, LAYOUT DESCRIPTION ADJUSTABLE SHELF (R3) (2), 1 = Shallow 1 = Full Location = Right of divider FIXED VERTICAL DIVIDER [R3] (1), Location = Centered 3/16" ALUMINUM MOUNTING PLATE (PER WALL) [R3] (1), Location = Back Wall 600# SLIDE-MASTER TRAY, 100% SLIDEOUT [R3] (1), LOCATION = LEFT OF DIVIDER
452	81130200	1	ADJUSTABLE SHELF [A1] (1)
453	80250100	1	TURTLE TILE ON COMPT FLOOR, SHELF, TRAY OR DRAWER [A1] (1)
454		1	**ENG Turtle Tile Color = Black
455	81165705	1	UNISTRUT TRACK IN COMPTS
456	80290015	1	COMPT DOORS, ROM ROLL-UP, SATIN FINISH
457	80230600	1	DOOR SILL PROTECTION, BODY COMPTS, PROTEC, CLEAR FILM
458	80225000	1	REAR COMPT DOOR (A1) ROM ROLL-UP, SATIN FINISH
459	80230660	1	DOOR SILL PROTECTION, REAR COMPT, PROTEC, CLEAR FILM
460	80230008	7	PULL CORDS FOR ROLL-UP DOORS (7)
461		1	**ENG Doors to have pull cords = All
462	80230003	7	ROLL-UP DOOR DRIP PAN/GUARD (WITH DRAIN) (7)
463		1	**ENG Doors to have splash guards w/drains = All

Line	Item #	Qty	Item Description/Comments
464	80230300	1	COMPT INTERIOR FINISH, SMOOTH
465	80230200	7	COMPT DOOR LOCKS, KEYED ALIKE (7)
466	84531215	1	COMPT LIGHTING, TECNIQ LED E44 LIGHT STRIPS, 2 PER COMPT
467	80288888	1	SPECIAL ITEM, MODIFIED G2 BODY
468	80288888	1	SPECIAL ITEM, COMPT DOOR LOCKS KEYED ALIKE
469		1	**CLAR NOTES, COMPARTMENT DOOR LOCKS KEYED ALIKE All compartment doors to be keyed alike.
470	80288888	1	SPECIAL ITEM, ELECTRONIC BODY DOOR LOCKS
471		1	**CLAR NOTES, ELECTRONIC BODY DOOR LOCKS Electronic body door locks to be provided & tied into cab door lock system.
472	10310305	1	BODY EXTERIOR
			BODY EXTERIOR
473	81380000	1	HOSEBED W/REMOVABLE ALUMINUM FLOORING
474		1	**ENG List the Hose Bed Hose Load Req. = HOSEBED LOAD 1000' 4" DJ X2 400' 2.5" DJ X2 Highrise Bundles & Gazner Packs
475	81330100	1	STANDARD HOSEBED HEIGHT
476	81410200	1	COVER, ALUMINUM 2 PC, MAIN HOSE BED
477	81331155	1	ALUM HOSEBED COVER SUPPORT, REMOVABLE REAR
478	81431210	1	REAR HOSEBED COVER, WEBBING
479		1	**ENG Hosebed Cover Color = Black.
480	81440230	1	COVER FASTENERS, METAL AIRPLANE LATCHES
481		1	**ENG Specify number of rear flaps, fasteners & and how they terminate (manufacturer's discretion or customer specified?) = 1 full size, attached to the removable bar

Line	Item #	Qty	Item Description/Comments
482	81330303	1	HOSE BED DIVIDERS, ADJ (3)
483	81332115	1	HOSEBED LIGHTING, SIDES, TECNIQ E44 LED LIGHT STRIPS
484	81388888	1	SPECIAL ITEM, SPECIAL ITEM, GAZNER PACK STORAGE
485		1	**CLAR NOTES, SPECIAL ITEM, GAZNER PACK STORAGE Gazner pack storage, above A1 compartment, size 22" wide 16" tall 39" deep, "D" handle latch with door prop, bottom surface to incorporate a plastic sliding surface. REFERENCE HS-7380 - RICK CAMPBELL ITEM # 81388888.
486	81910100	1	HANDRAILS, KNURLED STS
487	82290010	1	STEPS, FRONT BODY, IC FOLD DOWN W/LIGHT
488		1	**ENG Step Light Color = Blue.
489	82390005	1	STEPS, REAR BODY (IC FOLD DOWN W/LIGHT)
490	82510000	1	RUB RAILS, ANODIZED ALUM
491	83010050	1	ALUMINUM TREADPLATE (ALUM PPR, PRG1, C-SER, TANKER)
492	83030350	1	REAR STEP/TAILBOARD CORNERS, 45 DEGREE (PRG1)
493	89988888	1	SPECIAL ITEM, SPECIAL ITEM, SUTPHEN FABRICATED I-ZONE HOSE HOOKS MOUNTED AT REAR OF APPARATUS
494		1	**CLAR NOTES, SPECIAL ITEM, SUTPHEN FABRICATED I-ZONE HOSE HOOKS MOUNTED AT REAR OF APPARATUS iSutphen Fabricated I-ZONE HOSE HOOKS Two (2) I-Zone hose hooks, will be provided and mounted on rear of body. Approximate location, chest high outboard. Exact location TBD at Mid-Inspection. REFERENCE HS-7380 - RICK CAMPBELL. ITEM # 89988888.
495	80290051	1	8 SCBA CYLINDER COMPTS (2 TRIPLE-FMI, 2 SINGLES- SIG4)
496		1	**ENG Triple Bottle Compartment Location = Triple Bottle Compartments = Front of wheel well each side Single Bottle Compartments = Rear of wheel well each side
497	80290310	2	DOOR FINISH, BRUSHED STAINLESS, SINGLE/DOUBLE SCBA COMPT (2)
498	80290420	2	DOOR FINISH, BRUSHED STAINLESS, TRIPLE SCBA COMPT (2)
499	88520300	1	DELETE 6" SUCTION HOSE
500	88540550	1	DELETE STD SUCTION HOSE MTG

Line	Item #	Qty	Item Description/Comments
501	88550300	1	STRAINER NOT PROVIDED
502	89988888	1	SPECIAL ITEM, FLIP-UP TAILBOARD
503		1	**CLAR NOTES, FLIP UP TAILBOARD ILOS, Tailboard shall be a 14" flip-up style with 45 degree corners and notched if needed to not block rear tailights when up and secured. BOTH TOP & BOTTOM SURFACES WILL BE GRIP STRUT. REFERENCE HS-7380 - RICK CAMPBELL.
504	89988888	1	SPECIAL ITEM, RUB RAIL REFLECTIVE STRIPING
505		1	**CLAR NOTES, RUB RAIL REFLECTIVE STRIPING WITHIN THE RUB RAIL, REFLECTIVE STRIPING ARROW TAPE WILL BE INSTALLED, WITH ARROWS POINTING TO FRONT OF TRUCK, FOR PASSIVE TRAFFIC SAFETY ASSISTANCE. Reference HS-7380 & HS-3274 REFURB.
506	83030705	1	REAR FENDERS, ALUMINUM TREADPLATE
507	89028888	1	SPECIAL Ladder Package ILOS, DUO SAFETY GROUND LADDERS W/Shoes
508		1	**CLAR NOTES, ILOS, DUO SAFETY GROUND LADDERS W/Shoes Duo safety ground ladders all with shoes: 900A 24' 2 section 775A 14' roof 10' folding attic ladder
509	89590002	1	LADDER CHUTE W/BACKBOARD STORAGE & PIKE POLE STORAGE
510	89520220	1	LADDER ENCLOSURE, SMOOTH ALUM DOOR
511	10310310	1	ELECTRICAL
			ELECTRICAL
512	84550110	1	LICENSE PLATE BRACKET W/ LIGHT, LED
513	84511100	1	BODY ELECTRICAL DESCRIPTION
514	84520000	1	BACK UP ALARM, ECCO SA917
515	85010302	1	TAILLIGHTS, WHELEN 600 SERIES, LED STOP/TAIL/TURN/REVERSE, QUAD HOUSING (PAIR)
516		1	**ENG Tail Light Housing Color = Chrome.
517	85110100	1	ICC LIGHTS, LED

Line	Item #	Qty	Item Description/Comments
518	85510200	1	STEP LIGHTS, LED, REAR BODY & WHELEN 2G AT PUMP PANEL
519	85710010	1	UNDERCARRIAGE GROUND LIGHTS, TRUCK-LITE #44042C LED
520	86520300	1	REAR WORK LIGHTS, (2) FIRETECH WL-2000-F-B, LED
521	86600000	1	OPTICAL WARNING SYSTEM, UPPER (PUMPER)
			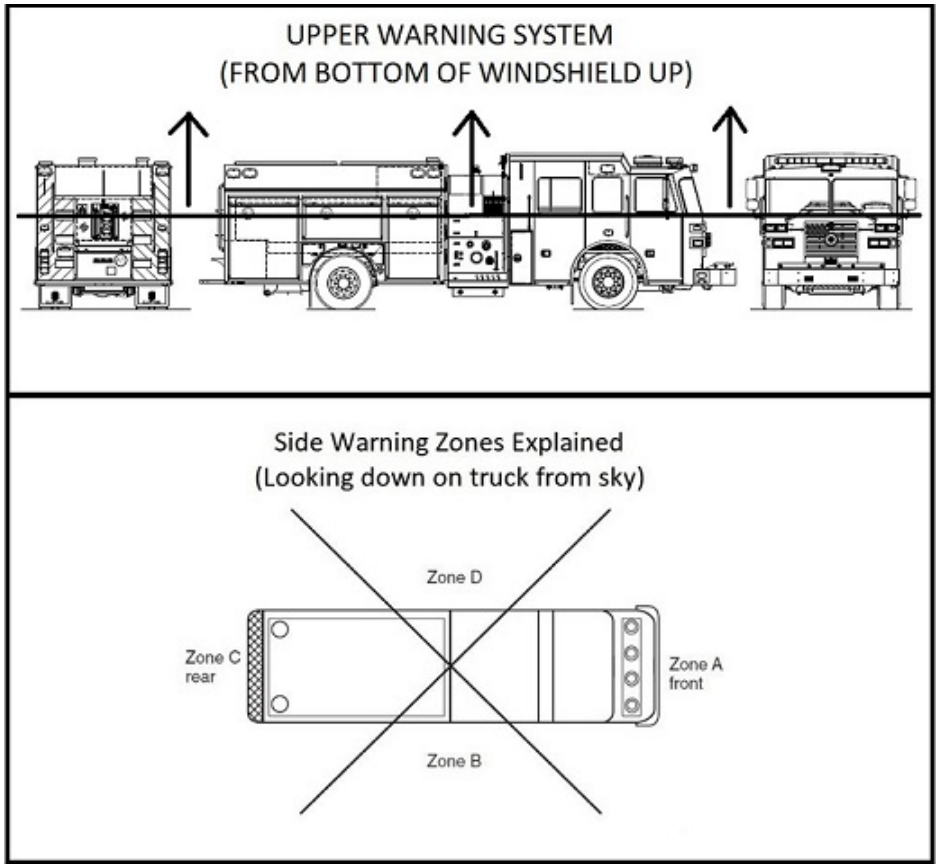
522	86610120	1	UPPER WARNING LIGHTS, ZONE A (FRONT), WHELEN FREEDOM IV 72" LED LIGHT BAR, F4N7QLED, 12 MODULES
			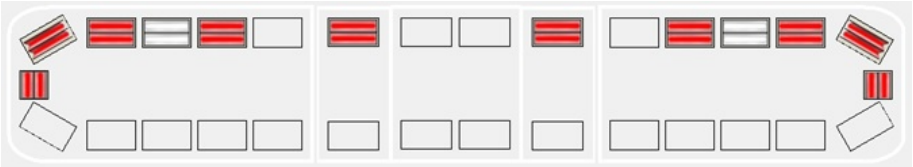
523		1	**ENG Zone A, Upper Lightbar Color / Details = Standard.
524	86928888	1	SPECIAL Opticom2 SPECIAL ITEM, OPTICOM, INSTALLED IN LIGHT BAR, F4500S STROBE (FOR WHELEN LIGHTBAR)
525		1	**CLAR NOTES, SPECIAL ITEM, OPTICOM, INSTALLED IN LIGHT BAR, F4500S STROBE (FOR WHELEN LIGHTBAR) SPECIAL ITEM, OPTICOM, INSTALLED IN LIGHT BAR, F4500S STROBE (FOR WHELEN LIGHTBAR)

Line	Item #	Qty	Item Description/Comments
526	86699998	1	UPPER WARNING LIGHTS, ZONE B (OFFICER'S SIDE), COVERED BY ZONES A & C (Surface Mount)
527	86710300	1	UPPER WARNING LIGHTS, ZONE C (REAR), WHELEN LED, 900 SERIES SURFACE MOUNT, 90**5F*R (QTY 4)
528		1	**ENG Zone C, Upper Rear Beacon Color/Details = Color = Red Lens Color = Red
529	86899998	1	UPPER WARNING LIGHTS, ZONE D (DRIVER'S SIDE), COVERED BY ZONES A & C (Surface Mount)
530	87100000	1	OPTICAL WARNING SYSTEM, LOWER (PUMPER)
			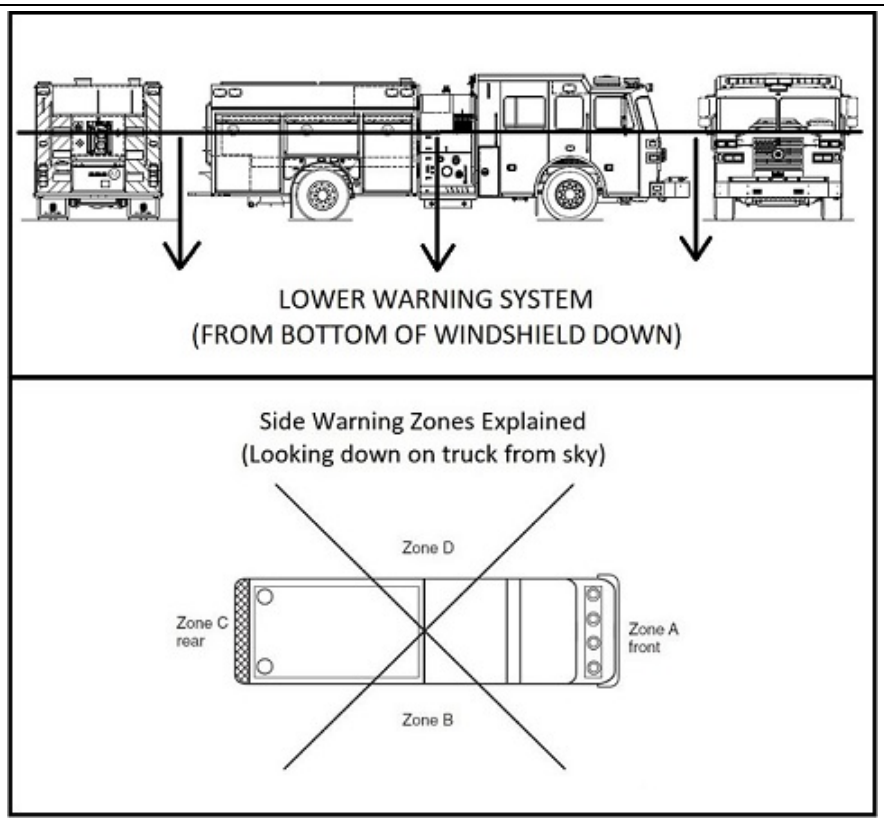
531	87110110	1	LOWER WARNING LIGHTS, ZONE A (FRONT), WHELEN 600 SUPER LED, 60*02F*R (QTY 4)
532		1	**ENG Zone A, Lower Warning Light Color, Lens Color, Details = Color = Red Lens Color = Red (2) Inboard lights to be Steady Burn
533	87811130	1	LOWER, ZONE A - MOUNTING LOCATION (DUAL HOUSINGS)
534		1	**ENG Zone A, Lower - Front, Mounting Location = (2) Warnings in top headlight housing, each side.
535	87210100	1	LOWER WARNING LIGHTS, ZONE B (OFFICER'S SIDE), WHELEN 600 SUPER LED, 60*02F*R (QTY 2), ION T-SERIES LED, TLI* (QTY 1)
536		1	**ENG Zone B, Lower Officer's Side Warning Light Color, Lens Color, Details = TBD

Line	Item #	Qty	Item Description/Comments
537	87812110	1	LOWER, ZONE B - MOUNTING LOCATION (PUMPERS, TANKERS, RESCUES)
538		1	**ENG Zone B, Lower - Officer's Side, Mounting Location = -(1) Warning Light near the front corner of the Apparatus. -(1) Warning Light near the rear Axle. -(1) Warning Light near the rear corner of the Apparatus. -Reference Shop Order Drawing for lights and placement.
539	87310100	1	LOWER WARNING LIGHTS, ZONE C (REAR), WHELEN 600 SUPER LED, 60*02F*R (QTY 2)
540		1	**ENG Zone C, Lower Rear Warning Light Color, Lens Color, Details = TBD
541	87410100	1	LOWER WARNING LIGHTS, ZONE D (DRIVER'S SIDE), WHELEN 600 SUPER LED, 60*02F*R (QTY 2), ION T-SERIES TLI* (QTY 1)
542		1	**ENG Zone D, Lower Driver's Side Warning Light Color, Lens Color, Details = TBD
543	87814110	1	LOWER, ZONE D - MOUNTING LOCATION (PUMPERS, TANKERS, RESCUES)
544		1	**ENG Zone D, Lower - Driver's Side, Mounting Location = -(1) Warning Light near the front corner of the Apparatus. -(1) Warning Light near the rear Axle. -(1) Warning Light near the rear corner of the Apparatus. -Reference Shop Order Drawing for lights and placement.
545	87537742	1	ADDITIONAL WARNING LIGHTS, WHELEN 900 SERIES LED, 90**5F*R (PAIR) (1)
546		1	**ENG Whelen 900 LED Warning Light Color = Red.
547		1	**ENG Whelen 900 LED Lens Color = Red.
548		1	**ENG Whelen 900 LED Mounting Location = DRAWING
549	87040000	1	TRAFFIC ADVISOR, WHELEN LED, TAL65 36"
550	88393000	1	SCENE LIGHTS, FIRETECH 30K LUMENS, 12V LED, 72" 3-PIECE BROW, FT-B-72-ML-3PKIT-* (1)
551		1	**ENG ICC Cab Marker Lights Integrated in Brow Light = Yes
552	88393052	8	SCENE LIGHT, FIRETECH GUARDIAN ELITE 20K, 12V LED, SURFACE MOUNT, FT-GESM (8)
553		1	**ENG Scene Light Details = Mounting Location = -(2) Side of Cab, 1 each side -(2) Side of Body, left side -(2) Side of Body right side Switched = Overhead Console Position 1 Left Scene, Right Scene -(2) Mounted Rear of Body Switched = Overhead Console Position 1, Lower Console Position 5 Rear Scene Reverse Activated Bezel = Chrome
554	88399940	4	ADDITIONAL SWITCH, 3-WAY FOR 12V LIGHTS (EA) (4)

Line	Item #	Qty	Item Description/Comments
555		1	**ENG Location & Function for Additional 3-Way Switches 12V = Location & Function for Additional 3-Way Switches 12V = Officer side switches
556	86588888	1	SPECIAL ITEM, 4 Four Additional 3-way Switches = Officers Side Switches Reference HS-7380
557		1	**CLAR NOTES, SCENE LIGHT, FIRETECH GUARDIAN ELITE 20K, 12V LED, SURFACE MOUNT, FT-GESM (8) Mounting Location = -(2) Side of Cab, 1 each side -(2) Side of Body, left side -(2) Side of Body right side Switched = Overhead Console Position 1 Left Scene, Right Scene -(2) Mounted Rear of Body Switched = Overhead Console Position 1, Lower Console Position 5 Rear Scene Reverse Activated Bezel = Chrome
558	10310410	1	PAINT & FINISH
			PAINT & FINISH
559	89910010	1	CORROSION REDUCTION PROGRAM (PROPOSALS)
560	90010020	1	PAINT SCHEME
561	90030004	1	PAINT, SINGLE TONE
562		1	**ENG Single Tone Paint Color = Red.
563	90030154	1	PAINT FRAME RAILS & BODY REAR DROP - BLACK
564	90030190	1	TEXTURED FRAME RAIL COATING
565	90030015	1	A/C CONDENSER PAINTED ROOF COLOR
566		1	**ENG Note Paint AC Condenser Color = Roof Color
567		1	**CLAR NOTES, REFERENCE HS-7380 DRAWING DATED 08/22/2022 & HS-5451.
568	90510100	1	LETTERING, NOT PROVIDED
569	90530005	8	ADDITIONAL 3" 22KT LETTERS (EACH) (8)
570	90530010	18	ADDITIONAL 4" 22KT LETTERS (EACH) (18)
571	90530030	34	ADDITIONAL 8" 22KT LETTERS (EACH) (34)
572	90530305	1	BASIC 22KT GOLD FIRE DEPT EMBLEMS (Pair)

Line	Item #	Qty	Item Description/Comments
573	90588888	1	SPECIAL ITEM, FLAG GRAPHICS SIDE OF BODY, (PAIR)
574		1	**CLAR NOTES, FLAG GRAPHICS SIDE OF BODY, (PAIR) SPECIALITEM, FLAG GRAPHICS SIDE OF BODY, (PAIR). REFERENCE HS-7380 DRAWING DATED 08/22/2022 & HS5471.
575	90610200	1	6" SCOTCHLITE STRIPE AROUND TRUCK
576	90630100	2	1" SCOTCHLITE STRIPE ABOVE OR BELOW - EACH (2)
577	90680120	1	CHEVRON STRIPING, REAR BODY OUTBOARD, REFLEXITE
578		1	**ENG Chevron Striping, Rear Body Color = #030 Red Transparent & #018 Yellow.
579	90680320	1	CHEVRON STRIPING, ABOVE REAR COMPT DOOR, REFLEXITE
580		1	**ENG Chevron Striping, Above Rear Compartment Door Color = #030 Red Transparent & #018 Yellow.
581	90684120	1	CHEVRON STRIPING, LADDER ENCLOSURE DOOR, REFLEXITE
582		1	**ENG List Special Lettering/Striping Details = Reference HS-7380 & HS-5451.
583	10310420	1	EQUIPMENT
			EQUIPMENT
584	91010000	1	MISC EQUIP - (1) PINT TOUCH-UP PAINT, STAINLESS STEEL NUTS & BOLTS
585	91088888	1	SPECIAL ITEM, DEALER SUPPLIED - SPECIAL ITEM, WHEEL CHOCK HWC7Y-WH Extruded Aluminum Yellow Part Number: 1114001156, 2 SHIPPED LOOSE, EACH (2)
586		1	**CLAR NOTES, DEALER SUPPLIED - SPECIAL ITEM, WHEEL CHOCK HWC7Y-WH Extruded Aluminum Yellow Part Number: 1114001156, 2 SHIPPED LOOSE, EACH (2)
587	91088888	1	SPECIAL ITEM, DEALER SUPPLIED - SPECIAL ITEM ***Rev B*** ***Rev B*** , KOCHECK K48-3 HYDRANT/SPANNER SET EACH (3)
588		1	**CLAR NOTES, DEALER SUPPLIED - SPECIAL ITEM, KOCHECK K48-3 HYDRANT/SPANNER SET EACH (3) KOCHECK K48-3 (3 sets per truck) Exact Mounting Location TBD @ Mid-Point Inspection
589	91088888	1	SPECIAL ITEM, DEALER SUPPLIED - SPECIAL ITEM, FLAG SPRING KIT (POLE, BRACKET, FLAG), 39" KIT ANGLED
590		1	**CLAR NOTES, DEALER SUPPLIED - SPECIAL ITEM, FLAG SPRING KIT (POLE, BRACKET, FLAG), 39" KIT ANGLED

Line	Item #	Qty	Item Description/Comments
			https://flagspring.com/products/flag-spring-kit 39" KIT ANGLED Exact Mounting Location TBD @ Mid-Point Inspection
591	91088888	1	SPECIAL ITEM, DEALER SUPPLIED - SPECIAL ITEM, DURASACK HEAVY DUTY BUILDER'S BAG
592		1	**CLAR NOTES, DEALER SUPPLIED - SPECIAL ITEM, DURASACK HEAVY DUTY BUILDER'S BAG 200 Gallon White Woven Polypropylene Construction and Demolition Bulk Bag - Pack of 10 https://www.amazon.com/DURASACK-Heavy-Duty-Builders-Polypropylene/dp/B09MF9HMDB/ref=sr_1_1?crid=ZQQYZST2EP6M&keywords=%27Secbolt%2BAnti-UV%2BFIBC%2BBag&qid=1652475550&s=hi&sprefix=secbolt%2Banti-uv%2Bfibc%2Bbag%2Ctools%2C112&sr=1-1&th=1
593	91088888	1	SPECIAL ITEM, DEALER SUPPLIED - SPECIAL ITEM, SPECTRA MOBILE 15K 12 VOLT PORTABLE SCENE LIGHT SPA710-P15, EACH (2)
594		1	**CLAR NOTES, DEALER SUPPLIED - SPECIAL ITEM, SPECTRA MOBILE 15K 12 VOLT PORTABLE SCENE LIGHT SPA710-P15, EACH (2) FRC Quote Number Q0039487 (2) per truck Exact Mounting Location TBD @ Mid-Point Inspection
595	91088888	1	SPECIAL ITEM, DEALER SUPPLIED - SPECIAL ITEM, VENTMASTER CUT-OFF SAW-K1-DG-14 FULL OPTION KIT, DEPTH GAUGE ROLLER, 1 RESCUE DIAMOND BLADE, (2) B380X BATTERY, C900X CHARGER, TEM TV402-101A
596		1	**CLAR NOTES, SPECIAL ITEM, VENTMASTER CUT-OFF SAW-K1-DG-14 FULL OPTION KIT, DEPTH GAUGE ROLLER, 1 RESCUE DIAMOND BLADE, (2) B380X BATTERY, C900X CHARGER, TEM TV402-101A McAuliffe's Quote Number 189258-0 Exact Mounting Location TBD @ Mid-Point Inspection
597	91088888	1	SPECIAL ITEM, DEALER SUPPLIED - SPECIAL ITEM, POWER BLOWER - VS1.2-18-0.9 ELECTRIC TAPP PPV, TEM 910-1825
598		1	**CLAR NOTES, DEALER SUPPLIED - SPECIAL ITEM, POWER BLOWER - VS1.2-18-0.9 ELECTRIC TAPP PPV, TEM 910-1825 McAuliffe's Quote Number 189258-0 Exact Mounting Location TBD @ Mid-Point Inspection
599	91088888	1	SPECIAL ITEM, DEALER SUPPLIED - SPECIAL ITEM, , 2PC. M18 REDLITHIUM, MILWAUKEE BATTERY WITH CHARGER

Line	Item #	Qty	Item Description/Comments
600		1	**CLAR NOTES, DEALER SUPPLIED - SPECIAL ITEM, , 2PC. M18 REDLITHIUM HIGH OUTPUT HD12.0 STARTER KIT, MILWAUKEE BATTERY WITH CHARGER Fastenal Quote Number 192735 Exact Mounting Location TBD @ Mid-Point Inspection
601	91088888	1	SPECIAL ITEM, DEALER SUPPLIED - SPECIAL ITEM, ZICO WALKAWAY SCBA BRACKETS SC-50-H
602		1	**CLAR NOTES, DEALER SUPPLIED - SPECIAL ITEM, ZICO WALKAWAY SCBA BRACKETS SC-50-H Installed in location = TBD (4) SC-50-H-6-30-5-SF-PHS
603		1	**CLAR NOTES, None
604	10310600	1	COMPLETION & WARRANTY
			COMPLETION & WARRANTY
605	99010100	1	MANUALS, ELECTRONIC VERSION (2-USB)
606	99031195	1	DEALER DELIVERY
607	99088888	1	SPECIAL ITEM, DEALER DELIVERY
608		1	**CLAR NOTES, An Allowance of $20,000 per unit is included in the price. These funds are to be used in event of errors and omissions in the specification process. Any unused funds will be credited on the final invoice.
609	99520110	1	WARRANTY, ONE YEAR
610	99521100	1	WARRANTY, FRAME, LIFETIME
611	99521200	1	WARRANTY, CAB STRUCTURAL, 10 YR.
612	99521300	1	WARRANTY, BODY STRUCTURAL, 10 YR.
613	99521400	1	WARRANTY, PAINT, 10 YR.
614	99521900	1	WARRANTIES, MAJOR VENDOR COMPONENTS
615	10310500	1	DEALER SUPPLIED
			DEALER SUPPLIED
616	Other	1	DEALER SUPPLIED - OTHER - TBD

Line	Item #	Qty	Item Description/Comments
617		1	COOPERATIVE PURCHASING AGENCY FEES (Sourcewell)

EQUIPMENT

Cummins Unveils X10 Fuel-Agnostic Engine

February 12, 2019 | Jack Roberts

The Cummins X10 engine is positioned to replace both the X12 and X15 engines in both medium- and heavy-duty applications.

Photo: Cummins

At a press event in Columbus, Indiana, in the summer of 2017, Cummins made it clear that all-electric vehicles (AEVs) are not the company's only answer to the challenge of meeting the global mandate to reduce transportation options. Now, the global engine and automotive technology supplier has announced another major stepping stone on that journey with the release of its new X10 fuel-agnostic engine.

According to Cummins engineers, the X10 engine is positioned to replace both the X12 and X15 engines in both medium- and heavy-duty applications. It will also be compatible with U.S. EPA's 2027 regulations a full year early.

Cummins intends to release the diesel version of the X10 first, with other versions for gaseous fuels coming to market later. The 10-liter displacement product slots into Cummins' product portfolio complemented by the B6.7 and X15 and will serve international, transit, pickup and delivery and regional haul customers.

"We are committed to advancing diesel technology while our markets and our customers need it to meet their needs. We have a long-term, sustainable business model and customer experience are notable in the medium and heavy-duty space," said Jack Sampers, executive director of North America on-highway at Cummins Inc. "We have applied these learnings to ensure this product will perform for our customers and the important jobs they need to do every day."

> **Jack Sampers** talks Cummins X10 Engine and more on the Future of Truck Engines.

Sampers said that the X10 features the ratings and reliability to complete the toughest jobs and regulations around. Cummins ranking point these days. That about fuel and diesel engines will remain a critical technology for the commercial vehicle market for years to come, and Cummins will continue to support those markets and customers with its technology.

Cummins said the new X10 diesel will emit 75% less NOx emissions than required at launch in 2026. It will also be compliant to the U.S. EPA's 2027 regulations while providing a step change in fuel economy improvement. The X10 architecture uses a bolt-ships high-output 48-volt electrical system to provide the power needed to meet future emissions and fuel economy standards and will be scalable to other advanced combustion technologies for further reductions in carbon emissions. Customers may choose to use B20 or renewable diesel.

The engine can be paired with a variety of transmissions depending on the application, including the Eaton Cummins Endurant to enable additional drivability benefits and efficiency gains. The engine will also be available with Cummins' aftertreatment, fuel system, and turbocharger components. Its extended maintenance intervals can help reduce costs in the field.

The engine is equipped with sources, a telematics system which provides digital connectivity and direct, immediate access to a range of applications and capabilities. These capabilities provide value throughout the lifecycle of the engine and include over-the-air calibration, predictive service recommendations and additional features that help fleets keep their trucks and equipment on the road.

Fuel-Agnostic Engine Platform

The new X10 engine is built on Cummins' emerging fuel-agnostic engine platform. These new fuel-agnostic engine platforms feature a series of engine versions that are derived from a common base engine, which means they have some parts commonality. Below the head gasket and above the oil pan, the engine platform is identical for all fuel types, but there are different components for different fuel types. Each engine version will operate using a different, single fuel. Cummins is offering a full portfolio of products in 2026 to cover the majority of the market, including the X10 and X15 for diesel, the B6.7 for natural gas and propane, the ISX12G. Additionally, the B6.7 will be offered in diesel, natural gas, gasoline and propane.

Sampers added that the new X10 engine will first be available in Europe and North America, although it will be introduced in other regions over time and eventually be engineered for off-highway markets as well.

For more information on Cummins technologies today, check out the HDT Talks Trucking Podcast with HDT editors Jim Park and Jack Roberts discussing what they learned during their visit to Cummins headquarters in the summer of 2019.

Read more about Cummins | Engine

Jack Roberts
Senior Editor, Commercial Vehicle
Jack Roberts has been covering the trucking industry since 2008. Before he became known for his reporting on the industry's emerging technologies and its ever-changing regulatory landscape, Roberts was a reporter covering the commercial real estate industry for Crain's Cleveland Business and covered sports for Gannett's Northeast Ohio newspapers and medium-duty trucks and rims.

2 Comments

Join the discussion...

1. **Bob Feldman** February 15, 2019 at 9:11 AM

Very exciting that Cummins has made a big commitment to the diesel engine and will be offering other types of fossil fuels for fleets to transition. They apparently intend to have a horse in every race.

Reply · See all comments

RELATED CONTENT

Cummins Debuts 15L Hydrogen Engine

HDT's 2022 Newsmaker of the Year: The Internal Combustion Engine

Cummins Returns to its Diesel Roots to Meet Emissions Goals

Q&A: Cummins On-Highway Engineer On Future of Truck Engines

NEWSLETTER

We respect your time and privacy.
By clicking Subscribe, you are agreeing with Vision Business Media's Privacy Policy and Terms of Service.

Email Address *

Subscribe!

View the latest: Videos Whitepapers eNews Fuel Savers Technology Updates

RELATED WHITEPAPER

Put Your Idling and Battery Woes on the Backburner

Download Now

MORE
EQUIPMENT

NEWS | 1 HOUR AGO

EPA's 2027 Low-NOx Rules and the Coming Probey [Video]

The EPA's new ultralow-NOx emissions rules give truck and engine makers less than three years to pull off a minor engineering miracle. Will fleets pony-truck ahead of the deadline?

NEWS | 1 HOUR AGO

Navistar Launches S13 Powertrain for Vocational Trucks

Navistar has launched its International S13 Integrated Powertrain for the vocational market, offering it in the International HV Series.

NEWS | 1 HOUR AGO

All-Electric Trucks Unwrapped at Work Truck Show [Photos]

Check out a range of new battery-electric trucks that were rolled out for the first time on the show floor during Work Truck Show 2023.

NEWS | 1 HOUR AGO

On the Spot: Daimler Truck North America's SuperTruck II [Video]

HDT's Equipment Editor Jim Park was in Las Vegas when DTNA's SuperTruck II was unveiled. Check out this video of the project.

NEWS | 1 HOUR AGO

P.S.I. Names Head of Product Strategy and Innovation

Ken Kelley joins P.S.I. as its senior director of product strategy and innovation, bringing 35 years experience to his new role.

NEWS | 1 HOUR AGO

Davco Technology Names New President

Davco has named transportation industry veteran Scott Morrison as its new president, and Daniel O'Donohue as its finance director.

NEWS | 1 HOUR AGO

Double Coin Names OE/National Account Manager

As the new original equipment and national account manager, Tim Kelly will be responsible for Double Coin brand truck tire sales into the OEM and fleet channels in North America.

NEWS | 1 HOUR AGO

Phillips' Mexico Production Campus Expansion [Photos]

Take a virtual tour through photos of Phillips' production site in Arteaga, Mexico.

NEWS | 1 HOUR AGO

Phillips Eyes Mexico as Production Hub for Truck, Trailer Products

A newly expanded 500,000-square-foot manufacturing campus in Arteaga, Mexico, will take the lead in producing Phillips industries and Phillips Connect products destined for North American fleet customers.

NEWS | 1 HOUR AGO

Workhorse Reveals All-Electric Medium-Duty Step Van

Workhorse Group lifted the curtain on its all-electric W56 Class 5 step van, a new zero-emissions vehicle that features a customized chassis and an ergonomically designed driver's cab area.

NEWS | 1 HOUR AGO

Hino Debuts Electric Versions of M- and L-Series Medium-Duty Trucks

Hino rolled out the battery-electric Class 5 M5e cabover and Class 6 L6e conventional model during the Work Truck show in Indianapolis.

NEWS | 1 HOUR AGO

New Dealer Tools from Volvo Help Fleets Optimize Specs, Maintenance

Leveraging the connectivity now aboard most Volvo trucks, Volvo Trucks North America is now offering two new services through its dealer network that can help optimize their truck specs and minimize maintenance-related downtime.

NEWS | 1 HOUR AGO

Mack Unleashes All-Electric Medium-Duty Trucks

The MD Electric, Mack's first electric medium-duty truck, was unveiled on March 9 at the 2023 Work Truck Show in Indianapolis.

NEWS | 1 HOUR AGO

Isuzu Rolls Out Its First All-Electric Truck

Isuzu Commercial Truck of America unveiled Isuzu's first all-electric truck production model, the Class 5 N-Series D-Van cabover.

NEWS | 1 HOUR AGO

Embark Autonomous-Truck Company Could Close Its Doors

It's been a tough nine months for the autonomous trucking industry, and that may mean the death knell for Embark.

LOAD MORE

GOT QUESTIONS?
Get Questions? Hand-Crafted Bale Solutions
Get quotes and specials from Handscraper all-purpose pick-up grapples.
View All
Sponsored
Dear Forwarder
Breaking Bulletin: Handscraper Trailer Commercial Vehicle
Sponsored

HDT Sustainable Fleet Summit
HDT Sustainable Fleet Summit

HDT Sustainable Fleet Summit
HDT Sustainable Fleet Summit

MAGAZINE
March 2023

- Digital Edition
- Digital Archives
- Subscribe

STANDARD VEHICLE WARRANTY

SUTPHEN CORPORATION (Sutphen) warrants to the original purchaser of a Sutphen vehicle, that it will provide for repairs to the Sutphen vehicle during the warranty period, in accordance with the following items, conditions, limitations and exclusions.

1. ---**What is covered except as otherwise stated below:** Sutphen shall provide repair or replacement, at the sole option of Sutphen, of any part of a Sutphen vehicle in which a defect in materials or workmanship appears under normal use, maintenance or service.

2. ---**Warranty period:** This limited warranty is in effect for a period of twelve (12) months or 24,000 miles, whichever comes first. The warranty period will begin on the date the vehicle is delivered to the original purchaser. This limited warranty is void if the odometer has been disconnected, its reading has been altered, or true and accurate mileage cannot be otherwise determined by Sutphen.

3. ---**Other warranties:** The manufacturers of other equipment and components, installed on the vehicle, including but not limited to engine, transmission, axles, pumps, tanks, and signaling devices and other installed equipment, may provide their own warranties. These warranties are separate from this limited warranty and shall constitute the sole and exclusive warranty for those specific covered components. Sutphen shall have no duty or obligation to repair or replace such components. Please review each manufacturer's warranty for descriptions and details of their respective warranty.

4. ---**Purchaser responsibilities:** Normal maintenance such as those detailed in the Sutphen Operation and Maintenance Manuals are the responsibility of the purchaser. A copy of maintenance documentation may be requested before approval is given for warranty repair. Failure to comply with such maintenance voids this limited warranty.

5. ---**What is NOT covered:** This limited warranty covers only repair or replacement of any part of a Sutphen vehicle in which a defect in materials or workmanship appears within the limited warranty period.
   Examples of items not covered include, but are not limited to:
   A. Major components or trade accessories such as purchased chassis, engines, signaling devices, transmission, pump, tank, or generator that have a separate warranty by the original manufacturer, or equipment used in fire fighting.
   B. Unauthorized alteration or modification to the vehicle, including the body, chassis or components, after completion of the vehicle assembly by Sutphen and any problems that occur as a result of such alterations or modifications.
   C. Damage caused by collision, fire, theft, freezing, vandalism, riot, explosion, acts of God, war or objects striking the vehicle or any damage covered by owner insurance.
   D. Damage caused by misuse or improper operation of the vehicle such as driving over curbs, overloading, racing or off-road use.
   E. Damage caused by failure to follow the requirements of the maintenance schedule, failure to maintain proper fluid and lubricant levels and failure to follow operating instructions.
   F. Normal maintenance such as lubrication, filter replacement, fluid replacement, belts, hoses, clutch, brake linings, brake drums, or disc brake rotors and electric accessories, etc.
   G. Batteries, tires, light bulbs.
   H. Towing charges and storage expenses.
   I. Incidental expenses such as loss of vehicle use, inconvenience, loss of time, vehicle rental, lodging or travel costs, vacation pay, etc.
   J. Discharge and compound gauges from freezing.
   K. Leaking seals on discharge and suction valves.
   L. Damage caused from exposure to road de-icing compounds or use in an acidic environment.
   M. Hydraulic failures caused by incorrect or contaminated oil.
   N. This warranty terminates upon transfer of ownership of the vehicle from the original purchaser.
   O. Damage caused from not following cab and body washing and care procedures located on truck and in operation and maintenance manual.

6. ---**Obtaining repairs:**
   A. All limited warranty work must be authorized by Sutphen prior to repairs being attempted.
   B. To obtain limited warranty repairs the vehicle must be taken by customer to an Authorized Sutphen Service Center within the limited warranty period. To find the name and location of the nearest Authorized Sutphen Service Center in your area, call 1-866-287-5549 or write Sutphen Corporation / Warranty Admin, PO Box 1845, Springfield, OH 45501.
   C. Sutphen reserves the right to inspect the vehicle before repairs are made and Sutphen shall be deemed the sole judge as to whether there is a defect in materials or workmanship under normal use, maintenance or service.

continued

D. Any part or parts considered to be covered by the conditions of this limited warranty shall be returned, freight prepaid, to Sutphen, or to such other location as may be approved by the company. Replacement or repair of parts determined to be within this limited warranty shall be F.O.B. at Sutphen.

E. In an emergency, where an Authorized Sutphen Service Center is not reasonably available, contact Sutphen Service Department for instructions. Repairs may be performed, **at purchaser's risk**, at any available service establishment chosen by purchaser. Purchaser must contact Sutphen Service Department the first business day after completion of repairs. Approved repair invoices must be received by Sutphen within sixty (60) days of repairs. Upon Sutphen's receipt of invoice, Sutphen will review the invoice for reimbursement to the purchaser. Any reimbursement will consist only of the reasonable and customary repair expenses normally covered under this limited warranty. Sutphen will assume no liability and will not warrant the workmanship or components which are the subject of any reimbursement under this policy.

7. ---**Warranty limitations:**

A. Nothing contained in this warranty shall make Sutphen liable beyond the express limitations hereof, for loss, injury or damage of any kind to any person or entity resulting from any defect or failure in the machine.

B. To the extent permitted by law, this limited warranty is also in lieu of all other obligations or liabilities on the part of Sutphen or the Seller, including liability for incidental and consequential damages.

C. Sutphen makes no representation that the machine has the capacity to perform any functions other than as contained in the company's written literature, catalogs or specifications accompanying delivery of the machine.

D. No person or affiliated company representative is authorized to give any other warranties or to assume any other liability on behalf of Sutphen in connection with sale, service or repair of any apparatus manufactured by the company.

E. Sutphen reserves the right to make design changes or improvements in it's products without imposing any obligation upon itself to change or improve previously manufactured products.

THIS WARRANTY IS PROVIDED IN EXCLUSION OF ANY AND ALL OTHER REPRESENTATIONS, EITHER EXPRESSED OR IMPLIED, INCLUDING BUT NOT LIMITED TO THE WARRANTIES OF MERCHANTABILITY, FITNESS, AND SUITABILITY FOR BUYER'S INTENDED USE. NO PERSON IS AUTHORIZED TO MAKE ANY REPRESENTATIONS OR WARRANTIES ON BEHALF OF SUTPHEN CORPORATION OTHER THAN SET FORTH HEREIN. ANY MODIFICATION TO THIS WARRANTY MUST BE IN WRITING AND APPROVED BY THE PRESIDENT OF SUTPHEN CORPORATION. THE PROVISIONS OF THIS LIMITED WARRANTY SHALL CONSTITUTE THE SOLE AND EXCLUSIVE REMEDIES OF A SUTPHEN VEHICLE PURCHASER.

For more information contact:
Sutphen Corporation / Warranty Admin.
PO Box 1845 • Springfield, OH 45501
Phone (937) 969-8851 • Toll Free (866) 287-5549

AERIAL PLATFORM AND AERIAL LADDER MECHANICAL WARRANTY TWO (2) YEARS

SUTPHEN CORPORATION (Sutphen) warrants the original user/purchaser that the mechanical components of a new aerial platform or aerial ladder is, and will remain, free of corrosion perforation, structural defects or failure provided that the components are used in a normal and reasonable manner. Mechanical components are defined as the hardware and mechanical items used on an aerial device. This Mechanical Warranty shall supplement the Standard Vehicle Warranty.

Sutphen's obligation under this limited warranty is subject to the conditions precedent (1) that the claimed failure shall have first appeared during the warranty period; (2) that the original purchaser shall have notified Sutphen in writing of the claimed failure within thirty (30) days after the claimed failure shall have first appeared, and (3) that, unless Sutphen directs otherwise, the claimed failed item or items shall have been returned to Sutphen, or to Sutphen designee, promptly after the notification, with transportation charges prepaid. Sutphen reserves the right to thoroughly examine the vehicle or parts thereof, prior to conducting or approving any repair or replacement, to determine whether the claimed failure is covered by this warranty. Sutphen's obligation under this warranty is strictly limited to repair or replacement as the company may elect.

This limited warranty coverage shall be valid for a period of two (2) years from the delivery date to the original user/purchaser. Further, this warranty shall be void if the vehicle is involved in an accident, shows signs of abuse, or evidence of being operated in an improper manner.

This limited warranty covers only repair or replacement of any part of a Sutphen vehicle in which a defect in materials or workmanship appears within the limited warranty period. Examples of items not covered include, but are not limited to:

A. ---Major components or trade accessories that have a separate warranty by the original manufacturer, or equipment used in fire fighting.
B. ---Unauthorized alteration or modification to the vehicle, including the aerial, body, chassis or components, after completion of the vehicle assembly by Sutphen and any problems that occur as a result of such alterations or modifications.
C. ---Damage caused by collision, fire, theft, freezing, vandalism, riot, explosion, acts of God, war or objects striking the vehicle or any damage covered by owner insurance.
D. ---Damage caused by misuse or improper operation of the vehicle such as driving over curbs, overloading, racing or off-road use.
E. ---Damage caused by failure to follow the requirements of the maintenance schedule, failure to maintain proper fluid and lubricant levels and failure to follow operating instructions.
F. ---Normal maintenance items such as lubrication, cables, shives, pivot bearings, pivot shafts, etc.
G. ---Towing charges and storage expenses.
H. ---Incidental expenses such as loss of vehicle use, inconvenience, loss of time, vehicle rental, lodging or travel costs, vacation pay, etc.
I. ----Damage to discharge and compound gauges from freezing.
J. ----Leaking seals on discharge and suction valves.
K. ---Damage caused from exposure to road de-icing compounds or use in an acidic environment.
L. ---Hydraulic failures caused by incorrect or contaminated oil.
M. ---Hydraulic pressure caused by incorrect PSI settings.
N. ---Hydraulic cylinder seal after one (1) year service.
O. ---Electric reels, air reels, electric controls and components.

If proper maintenance has not been performed and documented on Sutphen Aerial Inspection forms and sent to Sutphen at time of check, all coverage is void.

This warranty terminates upon transfer of possession or ownership of the vehicle from the original purchaser.

THIS WARRANTY IS PROVIDED IN EXCLUSION OF ANY AND ALL OTHER REPRESENTATIONS, EITHER EXPRESSED OR IMPLIED, INCLUDING BUT NOT LIMITED TO THE WARRANTIES OF MERCHANTABILITY, FITNESS, AND SUITABILITY FOR BUYER'S INTENDED USE. NO PERSON IS AUTHORIZED TO MAKE ANY REPRESENTATIONS OR WARRANTIES ON BEHALF OF SUTPHEN CORPORATION OTHER THAN SET FORTH HEREIN. ANY MODIFICATION TO THIS WARRANTY MUST BE IN WRITING AND APPROVED BY THE PRESIDENT OF SUTPHEN CORPORATION. THE PROVISIONS OF THIS LIMITED WARRANTY SHALL CONSTITUTE THE SOLE AND EXCLUSIVE REMEDIES OF A SUTPHEN VEHICLE PURCHASER.

For more information contact:
Sutphen Corporation / Warranty Admin.
PO Box 1845 • Springfield, OH 45501
Phone (937) 969-8851 • Toll Free (866) 287-5549

AERIAL PLATFORM OR AERIAL LADDER STRUCTURAL & CORROSION WARRANTY THIRTY (30) YEARS

SUTPHEN CORPORATION (Sutphen) warrants the original user/purchaser that a new aerial platform or aerial ladder is, and will remain, free of corrosion perforation and structural defects, provided the aerial platform is used in a normal and reasonable manner. An aerial platform or aerial ladder is defined as the mechanically operated telescopic boom constructed of high-strength structural aluminum mounted on the fire truck. Excluded are all hardware, mechanical or electrical items, bucket, yoke and all normal wear items. Truck must be third party tested yearly. The Sutphen hourly maintenance schedule must be sent in to Sutphen for documentation that this work was performed per hourly schedule. This Structural Warranty shall supplement the Standard Vehicle Warranty.

Sutphen's obligation under this limited warranty is subject to the conditions precedent (1) that the claimed failure shall have first appeared during the warranty period; (2) that the original purchaser shall have notified Sutphen in writing of the claimed failure within thirty (30) days after the claimed failure shall have first appeared, and (3) that, unless Sutphen directs otherwise, the claimed failed item or items shall have been returned to Sutphen, or to Sutphen designee, promptly after the notification, with transportation charges prepaid. Sutphen reserves the right to thoroughly examine the vehicle or parts thereof, prior to conducting or approving any repair or replacement, to determine whether the claimed failure is covered by this warranty. Sutphen's obligation under this warranty is strictly limited to repair or replacement as the company may elect.

This limited warranty coverage shall be valid for a period of thirty (30) years from the delivery date to the original user/purchaser. Further, this warranty shall be void if the vehicle is involved in an accident, shows signs of abuse, or evidence of being operated in any improper manner.

This limited warranty covers only repair or replacement of any part of a Sutphen vehicle in which a defect in materials or workmanship appears within the limited warranty period. Examples of items not covered include, but are not limited to:

A. ---Major components or trade accessories such as purchased chassis, engines, signaling devices, batteries, generators, tires, or transmissions that have a separate warranty by the original manufacturer, or to equipment used in fire fighting.
B. ---Unauthorized alteration or modification to the vehicle, including the body, chassis or components, after completion of the vehicle assembly by Sutphen and any problems that occur as a result of such alterations or modifications.
C. ---Damage caused by collision, fire, theft, freezing, vandalism, riot, explosion, acts of God, war or objects striking the vehicle or any damage covered by owner insurance.
D. ---Damage caused by misuse or improper operation of the vehicle such as driving over curbs, overloading, racing or off-road use.
E. ---Damage caused by failure to follow the requirements of the maintenance schedule, failure to maintain proper fluid and lubricant levels and failure to follow operating instructions.
F. ---Towing charges and storage expenses.
G. ---Incidental expenses such as loss of vehicle use, inconvenience, loss of time, vehicle rental, lodging or travel costs, vacation pay, etc.
H. ---Hydraulic pressures are not set to the correct PSI
I. ----Damage caused from exposure to road de-icing compounds or use in an acidic environment.
J. ----Hydraulic failures caused by incorrect or contaminated oil.
K. ---Hydraulic cylinder seal after one (1) year of service.

If proper maintenance has not been performed and documented on Sutphen Aerial Platform or Aerial Ladder Inspection forms and the forms sent to Sutphen at the time of check, all coverage is void.

This warranty terminates upon transfer of possession or ownership of the vehicle from the original purchaser.

THIS WARRANTY IS PROVIDED IN EXCLUSION OF ANY AND ALL OTHER REPRESENTATIONS, EITHER EXPRESSED OR IMPLIED, INCLUDING BUT NOT LIMITED TO THE WARRANTIES OF MERCHANTABILITY, FITNESS, AND SUITABILITY FOR BUYER'S INTENDED USE. NO PERSON IS AUTHORIZED TO MAKE ANY REPRESENTATIONS OR WARRANTIES ON BEHALF OF SUTPHEN CORPORATION OTHER THAN SET FORTH HEREIN. ANY MODIFICATION TO THIS WARRANTY MUST BE IN WRITING AND APPROVED BY THE PRESIDENT OF SUTPHEN CORPORATION. THE PROVISIONS OF THIS LIMITED WARRANTY SHALL CONSTITUTE THE SOLE AND EXCLUSIVE REMEDIES OF A SUTPHEN VEHICLE PURCHASER.

For more information contact:
Sutphen Corporation / Warranty Admin.
PO Box 1845 • Springfield, OH 45501
Phone (937) 969-8851 • Toll Free (866) 287-5549

CAB STRUCTURAL INTEGRITY WARRANTY TEN (10) YEARS

SUTPHEN CORPORATION (Sutphen) warrants the cab of each new custom fire and rescue vehicle manufactured by Sutphen to be free of structural failures caused by defective design or workmanship for a warranty period of ten (10) years after the date on which the vehicle is first delivered to the original purchaser or 100,000 miles, whichever occurs first. This warranty is limited to the cab tubular support and mounting structures and to the other structural components.

Sutphen's obligation under this warranty is limited to repairing or replacing, as Sutphen may elect, without charge to the original purchaser, the structural component or components which Sutphen, after examination, finds, to Sutphen's satisfaction, to have structurally failed due to defective design or workmanship.

Sutphen's obligation under this limited is subject to the conditions precedent: (1) that the claimed failure shall have first appeared during the warranty period; (2) that the original purchaser shall have notified Sutphen in writing of the claimed failure within thirty (30) days after the claimed failure shall have first appeared, and (3) that, unless Sutphen directs otherwise, the claimed failed item or items shall have been returned to Sutphen, or to Sutphen's designee, promptly after the notification, with transportation charges prepaid. Sutphen reserves the right to thoroughly examine the vehicle or parts thereof, prior to conducting or approving any repair or replacement, to determine whether the claimed failure is covered by this warranty. Sutphen's obligation under this warranty is strictly limited to repair or replacement as the company may elect.The warranty is pro-rated for a period of ten (10) years from the date of delivery as follows: first three years, one hundred percent; four years, seventy-five percent; five years, fifty percent; six years, forty percent; seven years, twenty-five percent; eight years, twenty percent; nine years, fifteen percent; ten years, ten percent.

In advance of the original purchaser effecting repair of replacement of a structural component or components found by Sutphen to have structurally failed due to defective design or workmanship, approval for the repair or replacement must be obtained from Sutphen's Customer Service Department. Repair or replacement must be made by a facility approved in advance by Sutphen. Failure to obtain either or both of the advance approvals voids this warranty. Coverage under this warranty of labor for repair or replacement is limited to the time or amounts reasonably necessary, as determined by Sutphen, to make the repair or replacement. Labor time or amounts deemed excessive by Sutphen are not covered under this warranty.

Any repair or replacement effected by Sutphen under this limited warranty is itself warranted under this warranty for the duration of the warranty period subject, however, to the provisions of this warranty as are applicable to the structural component or components repaired or replaced by Sutphen. Further, this warranty shall be void if the vehicle is involved in an accident, shows signs of abuse, or evidence of being operated in an improper manner.

This limited warranty covers only repair or replacement of any part of a Sutphen vehicle in which a defect in materials or workmanship appears within the limited warranty period. Examples of items not covered include, but are not limited to:

A. ---Major components or trade accessories that have a separate warranty by the original manufacturer, or equipment used in fire fighting.
B. ---Unauthorized alteration or modification to the vehicle, including the body, chassis or components, after completion of the vehicle assembly by Sutphen and any problems that occur as a result of such alterations or modifications.
C. ---Damage caused by collision, fire, theft, freezing, vandalism, riot, explosion, acts of God, war or objects striking the vehicle or any damage covered by owner insurance.
D. ---Damage caused by misuse or improper operation of the vehicle such as driving over curbs, overloading, racing or off-road use.
E. Damage caused by failure to follow the requirements of the maintenance schedule, failure to maintain proper fluid and lubricant levels and failure to follow operating instructions.
F. ---Towing charges and storage expenses.
G. ---Incidental expenses such as loss of vehicle use, inconvenience, loss of time, vehicle rental, lodging or travel costs, vacation pay, etc.
H. ---Damage caused from exposure to road de-icing compounds or use in an acidic environment.
I. ----(1) Normal maintenance services or adjustments:(2) any item that has been repaired, replaced or altered by a facility not approved in advance by Sutphen Customer Service Department or in a manner which in Sutphen's judgment, may adversely affect the operation or longevity of the vehicle or item; (3) special, incidental or consequential damages including, but not limited to, loss of time, inconvenience, loss of use, or lost profits; (4) any malfunction resulting from misuse, negligence, alternation accident, or lack o f operational knowledge or normal maintenance or adjustments; (5) time required to unload or reload the vehicle or item; (6) nonstructural breakage or cracking; (7) material bending, buckling or other metal deformation unless caused by a structural failure of a structural component as identified in Sutphen's specifications, of the cab due to defective design or workmanship; or (8) transportation fees or charges to or from any facility.

continued

J.----This limited warranty is void if Sutphen determines that the vehicle or item has been neglected, misused, altered, overloaded, loaded beyond specified compartment weights limits, loaded to a state of excessive imbalance side to side, or damaged. This warranty is also void if Sutphen determines that the warranty claim is false or misrepresented, that the vehicle or item has been damaged in an accident or by an act of God, or that the structural failure is attributable to use or operation of the vehicle or item in a manner or for a purpose other than that for which Sutphen intended or designed the vehicle or item.

This warranty terminates upon transfer of possession or ownership of the vehicle from the original purchaser.

THIS WARRANTY IS PROVIDED IN EXCLUSION OF ANY AND ALL OTHER REPRESENTATIONS, EITHER EXPRESSED OR IMPLIED, INCLUDING BUT NOT LIMITED TO THE WARRANTIES OF MERCHANTABILITY, FITNESS, AND SUITABILITY FOR BUYER'S INTENDED USE. NO PERSON IS AUTHORIZED TO MAKE ANY REPRESENTATIONS OR WARRANTIES ON BEHALF OF SUTPHEN CORPORATION OTHER THAN SET FORTH HEREIN. ANY MODIFICATION TO THIS WARRANTY MUST BE IN WRITING AND APPROVED BY THE PRESIDENT OF SUTPHEN CORPORATION. THE PROVISIONS OF THIS LIMITED WARRANTY SHALL CONSTITUTE THE SOLE AND EXCLUSIVE REMEDIES OF A SUTPHEN VEHICLE PURCHASER.

For more information contact:
Sutphen Corporation / Warranty Admin.
PO Box 1845 • Springfield, OH 45501
Phone (937) 969-8851 • Toll Free (866) 287-5549

FRAME WARRANTY
LIFETIME

SUTPHEN CORPORATION (Sutphen) warrants to the original user/purchaser only of a Sutphen chassis, that the frame or frame members are free of defects in material and workmanship, ordinary wear and tear excepted, for the lifetime of the vehicle.

Sutphen's obligation under this warranty is strictly limited to repairing, as the company may elect, any part or parts of such frame or frame members which the company's examination discloses to be defective in material or workmanship. The company reserves the right to require any such repairs to be made either at a company owned service facility or another approved service facility at the company's option. Transportation cost to and from the servicing location will be the responsibility of the user/purchaser.

Sutphen's obligation under this limited warranty is subject to the conditions (1) the claimed failure shall have first appeared during the warranty period; (2) the original purchaser shall have notified Sutphen in writing of the claimed failure within thirty (30) days after the claimed failure shall have first appeared, and (3) unless Sutphen directs otherwise, the claimed failed item or items shall have been returned to Sutphen, or to Sutphen designee, promptly after the notifications, with transportation charges prepaid. Sutphen reserves the right to thoroughly examine the vehicle or parts thereof, prior to conducting or approving any repair or replacement, to determine whether the claimed failure is covered by this limited warranty. Sutphen's obligation under this warranty is strictly limited to repair or replacement as the company may elect.

This warranty shall be null and void if the frame shows any evidence of alterations, cutting, splicing, additional welding or drilling of rails or flanges without the written authorization of Sutphen. Further, this warranty shall be void if the vehicle is involved in an accident, shows signs of abuse, or evidence of being operated in an improper manner. The frame and under carriage shall be washed and painted, by the owner, where needed, semi-annually or as conditions require; if rust starts, it must be properly primed and painted or this warranty shall be voided.

Periodically check apparatus for chips and scratches in the paint and repair them with touch-up paint furnished upon delivery, or equal. Several times a year wash underneath the apparatus, especially during winter months. If power wash is used, use a fan spray only or it may damage the undercoating or paint. If damage of undercoating or paint occurs, prime, paint, and re-undercoat areas where bare metal is showing, or warranty shall be void.

If optional Ziebart undercoating is provided on the apparatus, purchaser is required to have undercoating inspected annually by an Authorized Ziebart Dealer for a minimum of 10 years.

This limited warranty covers only repair or replacement of any part of a Sutphen vehicle in which a defect in materials or workmanship appears within the limited warranty period. Examples of items not covered include, but are not limited to:

A. ---Unauthorized alteration or modification to the vehicle, including the body, chassis or components, after completion of the vehicle assembly by Sutphen and any problems that occur as a result of such alterations or modifications.
B. ---Damage caused by collision, fire, theft, freezing, vandalism, riot, explosion, acts of God, war or objects striking the vehicle or any damage covered by owner insurance.
C. ---Damage caused by misuse or improper operation of the vehicle such as driving over curbs, overloading, racing or off-road use.
D. ---Damage caused by failure to follow the requirements of the maintenance schedule.
E. ---Towing charges and storage expenses.
F. ---Incidental expenses such as loss of vehicle use, inconvenience, loss of time, vehicle rental, lodging or travel costs, vacation pay, etc.
G. ---Damage caused from exposure to road de-icing compounds or use in an acidic environment.

This warranty terminates upon transfer of possession or ownership of the vehicle from the original purchaser.

THIS WARRANTY IS PROVIDED IN EXCLUSION OF ANY AND ALL OTHER REPRESENTATIONS, EITHER EXPRESSED OR IMPLIED, INCLUDING BUT NOT LIMITED TO THE WARRANTIES OF MERCHANTABILITY, FITNESS, AND SUITABILITY FOR BUYER'S INTENDED USE. NO PERSON IS AUTHORIZED TO MAKE ANY REPRESENTATIONS OR WARRANTIES ON BEHALF OF SUTPHEN CORPORATION OTHER THAN SET FORTH HEREIN. ANY MODIFICATION TO THIS WARRANTY MUST BE IN WRITING AND APPROVED BY THE PRESIDENT OF SUTPHEN CORPORATION. THE PROVISIONS OF THIS LIMITED WARRANTY SHALL CONSTITUTE THE SOLE AND EXCLUSIVE REMEDIES OF A SUTPHEN VEHICLE PURCHASER.

For more information contact:
Sutphen Corporation / Warranty Admin.
PO Box 1845 • Springfield, OH 45501
Phone (937) 969-8851 • Toll Free (866) 287-5549

PAINT WARRANTY
TEN (10) YEARS

SUTPHEN CORPORATION (Sutphen) warrants vehicle exterior paint finish of fire apparatus against peeling, cracking, and lack of adhesion, provided the vehicle is used in a normal and reasonable manner. This limited warranty is extended only to the original user/purchaser.

Sutphen's obligation under this warranty is strictly limited to repairing or replacing as the company may elect. The company reserves the right to require any such repairs to be made either at a company owned service facility or another approved service facility at the company's option. Transportation cost to and from the servicing location is the responsibility of the user/purchaser. Further, this warranty shall be void if the vehicle is involved in an accident, shows signs of abuse, or evidence of being operated in an improper manner.

Periodically check apparatus for chips and scratches in the paint and repair them with touch-up paint furnished upon delivery, or equal paint. Several times a year wash underneath the apparatus, especially during winter months. If power wash is used, use a fan spray only or it may damage the undercoating or paint. If damage of undercoating or paint occurs, prime, paint, and re-undercoat areas where bare metal is showing.

Sutphen's obligation under this limited warranty is subject to these conditions:

(1) The claimed failure shall have first appeared during the warranty period;
(2) The original purchaser shall have notified Sutphen in writing of the claimed failure within thirty (30) days after the claimed failure shall have first appeared, and
(3) Unless Sutphen directs otherwise, the claimed failed item or items shall have been returned to Sutphen, or to Sutphen designee, promptly after the notification, with transportation charges prepaid.

Sutphen reserves the right to thoroughly examine the vehicle or parts thereof, prior to conducting or approving any repair or replacement, to determine whether the claimed failure is covered by this limited warranty. Sutphen's obligation under this warranty is strictly limited to repair or replacement as the company may elect.

The warranty is pro-rated for a period of Ten (10) years from the date of delivery as follows: first year, one hundred percent; second year, one hundred percent; third year, one hundred percent; fourth year, fifty percent; fifth year, forty percent; sixth year, twenty five percent; seventh year, ten percent, eighth year, paint only, ninth year, paint only, tenth year, paint only. Paint only coverage from the paint manufacturer covers top coat and appearance only (gloss and color retention).

This limited warranty covers only repair or replacement of any part of a Sutphen vehicle in which a defect in materials or workmanship appears within the limited warranty period. Examples of items not covered include, but are not limited to:

A. ---Major components or trade accessories that have a separate warranty by the original manufacturer, or to equipment used in fire fighting.
B. ---An unauthorized alteration or modification to the vehicle, including the body, chassis or components, after completion of the vehicle assembly by Sutphen and any problems that occur as a result of such alterations or modifications.
C. ---Damage caused by collision, fire, theft, freezing, vandalism, riot, explosion, acts of God, war or objects striking the vehicle or any damage covered by owner insurance.
D. ---Damage caused by misuse or improper operation of the vehicle such as driving over curbs, overloading, racing or off-road use.
E. ---Damage caused by failure to follow the requirements of the maintenance schedule, failure to maintain proper fluid and lubricant levels and failure to follow operating instructions.
F. ---Incidental expenses such as loss of vehicle use, inconvenience, loss of time, vehicle rental, loading or travel costs, vacation pay, etc.
G. ---Gold leaf or striping and Scotchlite emblems or decals, except that which is affected by repair.
H. ---Damage caused from exposure to road de-icing compounds or use in an acidic environment.
I. ----Damage caused from not following cab and body washing procedures on truck and in Operation and Maintenance manual.
J. ----Defects if vehicle is damaged, dented, scratched or rusted from severe salt or road corrosive materials, or faded or discolored by exposure to heat or severe sun conditions or environmental conditions.
K. ---This warranty shall not apply to non-exterior surface areas (i.e. compartment interiors, undercarriages).
L. ---This warranty shall only apply to exterior coatings applied by Sutphen Corporation and specifically excludes all coating applications applied by other manufacturers including chassis and chassis compartments.

continued

M.---This warranty shall exclude accessory vendor equipment that is painted to match the finished vehicle.
N. ---This warranty shall exclude painted roll-up doors.
O. ---Hazing, chalking or loss of gloss caused by improper care, abrasive polishes, cleaning agents, heavy duty pressure washing or aggressive mechanical wash system.
P. ---Paint deterioration caused by abuse, accidents, acid rain, chemical fallout or acts of nature.
Q. ---Accidents, scratches, chips, bruises and gloss reduction due to normal vehicle use and maintenance.
R. – Third party undercoatings like Ziebart or Krown are not covered in this warranty.

This warranty terminates upon transfer of possession or ownership of the vehicle from the original purchaser.

THIS WARRANTY IS PROVIDED IN EXCLUSION OF ANY AND ALL OTHER REPRESENTATIONS, EITHER EXPRESSED OR IMPLIED, INCLUDING BUT NOT LIMITED TO THE WARRANTIES OF MERCHANTABILITY, FITNESS, AND SUITABILITY FOR BUYER'S INTENDED USE. NO PERSON IS AUTHORIZED TO MAKE ANY REPRESENTATIONS OR WARRANTIES ON BEHALF OF SUTPHEN CORPORATION OTHER THAN SET FORTH HEREIN. ANY MODIFICATION TO THIS WARRANTY MUST BE IN WRITING AND APPROVED BY THE PRESIDENT OF SUTPHEN CORPORATION. THE PROVISIONS OF THIS LIMITED WARRANTY SHALL CONSTITUTE THE SOLE AND EXCLUSIVE REMEDIES OF A SUTPHEN VEHICLE PURCHASER.

For more information contact:
Sutphen Corporation / Warranty Admin.
PO Box 1845 • Springfield, OH 45501
Phone (937) 969-8851 • Toll Free (866) 287-5549

PLUMBING WARRANTY
TEN (10) YEARS

SUTPHEN CORPORATION (Sutphen) warrants the stainless steel pipe and ancillary brass fittings used in the construction of the water plumbing system, for a period of ten (10) years, provided the vehicle is used in a normal and reasonable manner. This limited warranty is extended only to the original user/purchaser.

Sutphen's obligation under this warranty is strictly limited to repairing or replacing as the company may elect. The company reserves the right to require any such repairs to be made either at a company owned service facility or another approved service facility at the company's option. Transportation cost to and from the servicing location is the responsibility of the user/purchaser. Further, this warranty shall be void if the vehicle is involved in an accident, shows signs of abuse, or evidence of being operated in an improper manner.

This limited warranty covers only repair or replacement of above mentioned item(s) in which a defect in materials or workmanship appears within the limited warranty period.

This warranty terminates upon transfer of possession or ownership of the vehicle from the original purchaser.

THIS WARRANTY IS PROVIDED IN EXCLUSION OF ANY AND ALL OTHER REPRESENTATIONS, EITHER EXPRESSED OR IMPLIED, INCLUDING BUT NOT LIMITED TO THE WARRANTIES OF MERCHANTABILITY, FITNESS, AND SUITABILITY FOR BUYER'S INTENDED USE. NO PERSON IS AUTHORIZED TO MAKE ANY REPRESENTATIONS OR WARRANTIES ON BEHALF OF SUTPHEN CORPORATION OTHER THAN SET FORTH HEREIN. ANY MODIFICATION TO THIS WARRANTY MUST BE IN WRITING AND APPROVED BY THE PRESIDENT OF SUTPHEN CORPORATION. THE PROVISIONS OF THIS LIMITED WARRANTY SHALL CONSTITUTE THE SOLE AND EXCLUSIVE REMEDIES OF A SUTPHEN VEHICLE PURCHASER.

For more information contact:
Sutphen Corporation / Warranty Admin.
PO Box 1845 • Springfield, OH 45501
Phone (937) 969-8851 • Toll Free (866) 287-5549

Cummins Protection Plan Plus

Coverage

This Extended Coverage Plan (Plan) is available to be purchased for all eligible Cummins Engines used in automotive applications marketed for use Worldwide under the trademark "Cummins", "Cummins ReCon®" or "Cummins Westport".

This Plan covers any failure of the Engine which results, under normal use and service, from a defect in Cummins material or factory workmanship (Covered Failure).

This Plan begins on the expiration of the Cummins Base Engine Warranty applicable to the Engine. Coverage ends at the time, miles (kilometers) or hours specified on the accompanying Certificate, whichever occurs first, **AS MEASURED FROM THE CUMMINS BASE ENGINE WARRANTY START DATE**.

Cummins Responsibilities

Cummins will pay for all parts and labor needed to repair the damage to the Engine resulting from a Covered Failure.

Cummins will pay for the lubricating oil, antifreeze, filter elements and other maintenance items that are not reusable due to the Covered Failure.

Cummins will pay reasonable labor costs for Engine removal and reinstallation when necessary to repair a Covered Failure.

Owner Responsibilities

Owner is responsible for operation and maintenance of the Engine as specified in the applicable Cummins Operation and Maintenance Manual. Owner is also responsible for providing proof that all recommended maintenance has been performed.

Before the expiration of this Plan, Owner must notify a Cummins distributor, authorized dealer or other repair location approved by Cummins of any Covered Failure and make the Engine available for repair by such facility. Service locations are listed on the Cummins Worldwide Service Locator at cummins.com.

Owner is responsible for all towing and/or travel expenses incurred as a result of a Covered Failure for Engines used in automotive applications.

Owner is responsible for the cost of lubricating oil, antifreeze, filter elements, belts, hoses and other maintenance items provided during covered repairs unless such items are not reusable due to the Covered Failure.

Owner is responsible for communication expenses, meals, lodging and similar costs incurred as a result of a Covered Failure.

Owner is responsible for non-Engine repairs, "downtime" expenses, cargo damage, fines, all applicable taxes, all business costs and other losses resulting from a Covered Failure.

Owner is responsible for the costs to investigate complaints, unless the problem is caused by a covered defect in Cummins material or factory workmanship.

Limitations

Engines with an emissions certification listed below must be operated using only diesel fuel having no more than the corresponding maximum sulfur content. Failure to use the specified fuel as listed in the Cummins Fuel Bulletin #3379001 Table 1 (Cummins Inc. Required Diesel Fuel Specifications) can damage the Engine and aftertreatment system within a short period of time. This damage could cause the Engine to become inoperable and failures attributable to the use of incorrect fuels will be denied Warranty Coverage. Fuel specifications also need to comply with local fuel regulations (EN590 for Europe and ASTM D975 for North America) for Warranty eligibility.

Maximum sulfur levels by emissions certification level as listed on the Engine's dataplate are:

EPA 2007/2010/2013/2017	max. 15 parts per million
EPA Tier 4 Interim / Final	max. 15 parts per million
EU Stage IIIB 2011	max. 15 parts per million
Euro 4/5	max. 50 parts per million
Euro 6	max. 10 parts per million

Cummins is not responsible for failures resulting from incorrect modifications or alterations to the Engine or adjustments that significantly alter the Engine's operating characteristics. Failures, other than those resulting from a defect in material or factory workmanship, are not covered by this Plan.

Cummins is not responsible for failures or damage resulting from what Cummins determines to be abuse or neglect, including, but not limited to: operation without adequate coolants or lubricants; overfueling; overspeeding; lack of maintenance of lubricating, cooling or intake systems; improper storage, starting, warm-up, run-in or shutdown practices; unauthorized modifications of the Engine. Cummins is also not responsible for failures caused by incorrect oil or fuel, or by water, diesel exhaust fluid, dirt or other contaminants in the fuel, oil or diesel exhaust fluid.

Aftertreatment component failures are not covered by this Plan.

Belts and hoses are not covered by this Plan.

This Plan does not apply to accessories supplied by Cummins which bear the name of another company. Such non-warranted accessories include, but are not limited to: alternators, starters, fans, air conditioning compressors, clutches, filters, transmissions, torque converters, steering pumps, non-Cummins fan drives, Engine compression brakes and air compressors. Cummins branded alternators and starters are not covered by this Plan.

Parts used to repair a Covered Failure may be new Cummins parts, Cummins approved rebuilt parts or repaired parts. Cummins is not responsible for failures resulting from the use of parts not approved by Cummins.

A new Cummins or Cummins approved rebuilt part used to repair a Covered Failure under this Plan assumes the identity of the part it replaced and is entitled to the remaining Coverage hereunder.

This Plan is transferable to subsequent Owners of the Engine by notifying a Cummins Distributor within 90 days of the transfer of ownership.

This Plan does not duplicate other Coverage applicable to the Engine.

Fees paid for this Plan are not refundable.

CUMMINS DOES NOT COVER WEAR OR WEAROUT OF COVERED PARTS.

CUMMINS IS NOT RESPONSIBLE FOR INCIDENTAL OR CONSEQUENTIAL DAMAGES.

CUMMINS RESERVES THE RIGHT TO INTERROGATE ELECTRONIC CONTROL MODULE (ECM) DATA FOR PURPOSES OF FAILURE ANALYSIS.

EXCEPT FOR THE PUBLISHED CUMMINS ENGINE WARRANTY APPLICABLE TO THE ENGINE, THERE ARE NO OTHER WARRANTIES, EXPRESS OR IMPLIED, OR OF MERCHANTABILITY OR FITNESS FOR A PARTICULAR PURPOSE.

In the United States* and Canada, this Warranty gives you specific legal rights, and you may also have other rights, which vary from state to state or province to province.

Outside the United States* and Canada, in the case of consumer sales, in some countries the Owner has statutory rights, which cannot be affected or limited by the terms of this Warranty. Nothing in this Warranty excludes or restricts any contractual rights the Owner may have against third parties.

* United States includes American Samoa, the Commonwealth of Northern Mariana Islands, Guam, Puerto Rico and the U.S. Virgin Islands.

Coverage I.D.: EXC

Coverage I.D.: RXC

Cummins Inc.
Box 3005
Columbus, IN 47202-3005
U.S.A.

Bulletin 3385468 Printed in U.S.A. Rev. 5/16 **©2000 Cummins Inc.**

DISPLAY CONSPICUOUSLY AT PLACE OF BUSINESS FOR WHICH ISSUED

CALIFORNIA DEPARTMENT OF TAX AND FEE ADMINISTRATION

SELLER'S PERMIT

July 1, 2020

ACCOUNT NUMBER

207534976 - 00004

REPUBLIC FIRE EQUIPMENT LLC.
25802 VICTORIA BLVD STE 102
DANA POINT CA 92624-1128

Office of Control:
Irvine Office

NOTICE TO PERMITTEE: You are required to obey all Federal and State laws that regulate or control your business. This permit does not allow you to do otherwise.

IS HEREBY AUTHORIZED PURSUANT TO SALES AND USE TAX LAW TO ENGAGE IN THE BUSINESS OF SELLING TANGIBLE PERSONAL PROPERTY AT THE ABOVE LOCATION. THIS PERMIT IS VALID ONLY AT THE ABOVE ADDRESS.

THIS PERMIT IS VALID UNTIL REVOKED OR CANCELED AND IS NOT TRANSFERABLE. IF YOU SELL YOUR BUSINESS OR DROP OUT OF A PARTNERSHIP, NOTIFY US OR YOU COULD BE RESPONSIBLE FOR SALES AND USE TAXES OWED BY THE NEW OPERATOR OF THE BUSINESS.

Not valid at any other address

For general tax questions, please call our Customer Service Center at 1-800-400-7115 (TTY:711).
For information on your rights, contact the Taxpayers' Rights Advocate Office at 1-888-324-2798 or 1-916-324-2798.

CDTFA-442-R REV. 18 (5-18)

A MESSAGE TO OUR NEW PERMIT HOLDER

As a seller, you have rights and responsibilities under the Sales and Use Tax Law. In order to assist you in your endeavor and to better understand the law, we offer the following sources of help:

- Visiting our website at *www.cdtfa.ca.gov*
- Visiting an office
- Attending a Basic Sales and Use Tax Law class offered at one of our offices
- Sending your questions in writing to any one of our offices
- Calling our toll-free Customer Service Center at 1-800-400-7115 (TTY:711)

As a seller, you have the right to issue resale certificates for merchandise that you intend to resell. You also have the responsibility of not misusing resale certificates. While the sales tax is imposed upon the retailer,

- You have the right to seek reimbursement of the tax from your customer
- You are responsible for filing and paying your sales and use tax returns timely
- You have the right to be treated in a fair and equitable manner by the employees of the California Department of Tax and Fee Administration (CDTFA)
- You are responsible for following the regulations set forth by the CDTFA

As a seller, you are expected to maintain the normal books and records of a prudent businessperson. You are required to maintain these books and records for no less than four years, and make them available for inspection by a CDTFA representative when requested. You are also required to know and charge the correct sales or use tax rate, including any local and district taxes. The tax rate applicable to your sales or use may not necessarily correspond to the tax rate of your business address displayed on this permit. You are also expected to notify us if you are buying, selling, adding a location, or discontinuing your business, adding or dropping a partner, officer, or member, or when you are moving any or all of your business locations. If it becomes necessary to surrender this permit, you should only do so by mailing it to a CDTFA office, or giving it to a CDTFA representative.

If you would like to know more about your rights as a taxpayer, or if you are unable to resolve an issue with CDTFA, please contact the Taxpayers' Rights Advocate Office for help by calling toll-free, 1-888-324-2798 or 1-916-324-2798. Their fax number is 1-916-323-3319.

Please post this permit at the address for which it was issued and at a location visible to your customers.

California Department of Tax and Fee Administration

Business Tax and Fee Division