# EFFINGHAM COUNTY B.O.E.

## GUYTON MAINTENANCE FACILITY GEORGIA

### EFFINGHAM COUNTY BOARD OF EDUCATION

405 NORTH ASH STREET
SPRINGFIELD, GA 31329
24 HR. CONTACT: RON WOMACK (912) 656-5953
GPS: 32.246760, -81.283572

INDEX OF DRAWINGS



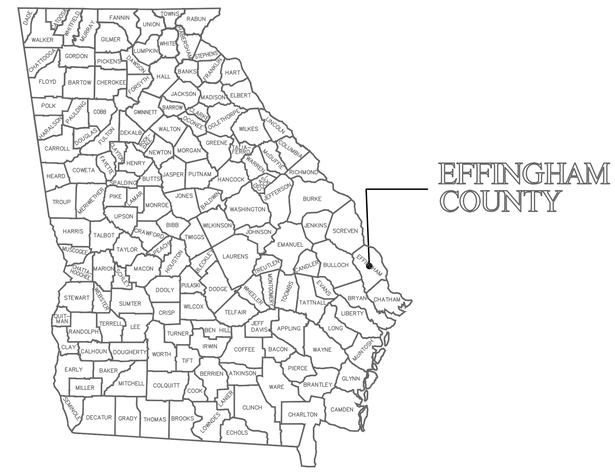


# JAMES W. BUCKLEY & ASSOCIATES INC.

ARCHITECTS PLANNERS INTERIOR DESIGNERS CIVIL ENGINEERS


**SAVANNAH**
7 EAST CONGRESS STREET
SUITE 800
SAVANNAH, GEORGIA 31401
(912) 447-1080

**SWAINSBORO**
114 NORTH GREEN STREET
SWAINSBORO, GEORGIA 30401
(478) 237-6467

**ALBANY**
423 PINE AVENUE.
ALBANY, GEORGIA 31702
(229) 883-4698

**ROME**
700 E. SECOND AVENUE; SUITE A
ROME, GEORGIA 30161
(706) 234-1884


GA. ENGINEERING & LAND SURVEYING
BOARD CORPORATE LICENSING NUMBER 002802

EFFINGHAM COUNTY B.O.E. MAINTENANCE FACILITY
EFFINGHAM COUNTY BOARD OF EDUCATION
JAMES W. BUCKLEY & ASSOCIATES, INC.
ARCHITECTS PLANNERS INTERIOR DESIGNERS CIVIL ENGINEERS

GUYTON GEORGIA

JAMES W. BUCKLEY & ASSOCIATES
CIVIL ENGINEERING DEPARTMENT
114 NORTH GREEN STREET
SWAINSBORO, GEORGIA 30401
(478) 237-6467
(478) 237-3197 FAX

ISSUED FOR
BID

12-20-2024
DATE
22-065
PROJECT NO.



J:\Effingham County Schools\22-065 Effingham County School Maintenance Facility\C-Drawings\SAVE - 80-22-2024.dwg - 12/19/2024 11:21:38 AM

## GENERAL NOTES

1. EXISTING CONDITIONS BASED UPON A FIELD SURVEY PERFORMED BY EMC ENGINEERING SERVICES, INC. DATED JULY 14, 2023
2. THIS PROPERTY IS BEING USED FOR THE CONSTRUCTION OF MAINTENANCE FACILITY
3. CONTOUR INTERVAL IS 1'. VERTICAL DATUM IS BASED ON N.A.V.D. 1988.
4. THIS PROPERTY IS LOCATED AT HODGEVILLE RD, CITY OF GUYTON, EFFINGHAM COUNTY, GA.
5. STREET ADDRESS: HODGEVILLE ROAD, GUYTON, GEORGIA 31312.
6. THE ZONING FOR THIS PROPERTY IS PD.
7. THIS PARCEL CONTAINS A TOTAL OF 24.997 ACRES, DISTURBED AREA IS 17.60 ACRES.
8. CONTRACTOR TO VERIFY BENCHMARKS, INVERTS, AND FINISH FLOORS PRIOR TO SETTING FINISH GRADES.
9. DEMOLITION TO INCLUDE ALL UTILITIES, STRUCTURES, AND VEGETATION INSIDE NOTED AREA.
10. IT IS THE CONTRACTOR'S RESPONSIBILITY TO ESTABLISH AND MAINTAIN TRAFFIC CONTROL DEVICES DURING CONSTRUCTION.
11. ANY BENCHMARKS TO BE DEMOLISHED WILL BE RELOCATED TO A PERMANENT STRUCTURE OUTSIDE CONSTRUCTION AREA PRIOR TO START OF CONSTRUCTION BY GA RLS.
12. OWNER / DEVELOPER:

    EFFINGHAM COUNTY BOARD OF EDUCATION
    405 NORTH ASH ST.
    SPRINGFIELD, GA 31329
    24 HOUR CONTACT: RON WOMACK
    PH #: 912-656-5953
13. THERE ARE NO KNOWN STATE WATERS PRESENT ON THIS SITE WHICH REQUIRE A (25) FOOT MINIMUM UNDISTURBED BUFFER.
14. IT IS THE CONTRACTOR'S RESPONSIBILITY TO ESTABLISH AND MAINTAIN LIMITS OF CONSTRUCTION THROUGHOUT THE DURATION OF THE PROJECT. CONTRACTOR IS RESPONSIBLE FOR THE DISTURBANCE OF OR DAMAGE TO AREAS OUTSIDE THESE LIMITS.
15. THERE ARE KNOWN WETLANDS LOCATED ON THIS SITE. ALL WETLANDS ARE UNDER THE JURISDICTION OF THE U.S. ARMY CORPS OF ENGINEERS. DISTURBANCE OF THESE AREAS WITHOUT PROPER AUTHORIZATION IS SUBJECT TO PENALTY BY LAW. THE APPLICANT WILL FIRST OBTAIN A WETLAND ALTERATION SECTION 404 PERMIT FROM THE CORPS OF ENGINEERS PRIOR TO DISTURBING ANY JURISDICTIONAL WETLANDS.
16. DISPOSAL OF DEBRIS: NO MATERIALS ARE TO BE BURIED ON-SITE. CLEARING AND GRUBBING DEBRIS MAY BE BURNED WITH THE APPROPRIATE PERMIT FROM THE LOCAL AUTHORITY. CONSTRUCTION MATERIALS MUST BE TAKEN TO A STATE APPROVED LAND FILL.
17. THIS PARCEL IS NOT IN A FLOOD HAZARD AREA ACCORDING TO F.I.R.M. COMMUNITY NUMBER 13103C0360E EFFECTIVE MARCH 16, 2013.

## SITE PLAN NOTES

1. ALL SIGNAGE SHALL CONFORM TO APPLICABLE LOCAL AND STATE STANDARDS.
2. AT LOCATIONS OF CURB AND GUTTER, DIMENSIONS GIVEN TO FACE OF CURB. DIMENSIONS AND CURVE DATA AT OTHER LOCATIONS GIVEN TO EDGE OF PAVEMENT.
3. CURVE RADII AND DIMENSIONS FOR STREETS AND DRIVES ARE GIVEN TO CENTERLINE OF DRIVE.
4. ALL STRIPING IN RIGHT-OF-WAY SHALL BE THERMO-PLASTIC.
5. COORDINATES ON BUILDING CORNERS ARE FOR ORIENTATION ONLY.
6. ALL ON SITE CURB AND GUTTER SHALL BE 18" STANDARD CURB AND GUTTER. INSIDE GEORGIA D.O.T. RIGHTS-OF-WAY SHALL BE 30" STANDARD. LOCATE EXPANSION JOINTS AT MAXIMUM INTERVALS OF (30) FEET AND AT EVERY CHANGE IN DIRECTION.
7. PROVIDE EXPANSION JOINTS BETWEEN CONCRETE PAVEMENT AND ALL FIXED STRUCTURES. (I.E. MANHOLES, CLEANOUTS, SIDEWALKS)
8. LOCATE CONTRACTION JOINTS AT MAXIMUM INTERVALS OF (10) FEET.
9. NO WORK IS ALLOWED WITHIN A GEORGIA D.O.T. RIGHT-OF-WAY WITHOUT AN APPROVED PERMIT AND ESCROW ACCOUNT. CONTRACTOR IS RESPONSIBLE FOR ALL NECESSARY TRAFFIC CONTROL DEVICES.

## GRADING & DRAINAGE NOTES

1. TIE ALL NEW CONTOURS AND GRADES INTO EXISTING WITH SMOOTH, UNIFORM AND EVEN SLOPES TO ENSURE THAT WATER DRAINS AWAY FROM BUILDINGS.
2. ELEVATIONS ARE BASED ON N.A.V.D. 1988.
3. ROOF DRAIN LINES AND DOWN SPOUT COLLECTION LINES TO BE RUN ON 1% MINIMUM SLOPE UNLESS OTHERWISE INDICATED.
4. ALL FLARED END SECTIONS SHALL BE REINFORCED CONCRETE.
5. ALL HEADWALLS AND FLARED END SECTIONS SHALL BE REINFORCED PRE-CAST OR CAST IN PLACE MAY BE USED AT CONTRACTOR'S DISCRETION.
6. ALL ROOF DRAINS AND DOWNSPOUTS SHALL BE CONNECTED TO UNDERGROUND STORM DRAINAGE COLLECTION SYSTEM. SEE ARCHITECTURAL PLAN FOR EXACT LOCATIONS OF DOWNSPOUTS. SEE PLUMBING PLAN FOR ROOF DRAIN LOCATIONS.
7. ALL STORM DRAINAGE PIPE LOCATED INSIDE A PUBLIC RIGHT-OF-WAY SHALL BE REINFORCED CONCRETE PIPE CONFORMING TO D.O.T. SPECIFICATIONS. ALL STORM DRAINAGE PIPE LOCATED WITHIN SITE LIMITS SHALL BE HDPE UNLESS NOTED OTHERWISE.
8. FINISH FLOOR OF BUILDINGS IS 72.00'. GRADE IMMEDIATELY OUTSIDE THE BUILDING SHALL BE A MINIMUM OF (12) INCHES BELOW FINISH FLOOR ELEVATION UNLESS OTHERWISE NOTED BY SPOT ELEVATIONS.
9. DASHED AREAS THAT ARE CALLED OUT AS 'FUTURE BUILDING ADDITION' SHALL BE COMPACTED TO 98% STD. PROCTOR TO WITHIN 12" OF FINISHED GRADE.
10. STORM WATER MANAGEMENT FOR THIS PROJECT IS PROVIDED ON-SITE.
11. WETLAND CERTIFICATION: THE DESIGN PROFESSIONAL, WHOSE SEAL APPEARS HEREON, CERTIFIES THE FOLLOWING:
    1) THE NATIONAL WETLAND INVENTORY MAPS HAVE BEEN CONSULTED, AND,
    2) THE APPROPRIATE PLAN SHEET DOES NOT INDICATE AREAS OF UNITED STATES ARMY CORPS OF ENGINEERS JURISDICTIONAL WETLANDS AS SHOWN ON THE MAPS.
12. MAXIMUM CUT SLOPES SHALL BE 2 HORIZONTAL TO 1 VERTICAL. CONTINUOUS FILL SLOPES TEN (10) FEET IN HEIGHT OR LESS MAY BE 2 HORIZONTAL TO 1 VERTICAL. ALL CONTINUOUS SLOPES THAT EXCEED TEN (10) FEET IN HEIGHT MUST BE 3 HORIZONTAL TO 1 VERTICAL UNLESS:
    (A.) A MECHANICALLY ENGINEERED STABILIZED SLOPE IS APPROVED BY THE EFFINGHAM COUNTY DIRECTOR OF ENGINEERING, OR
    (B.) THE DESIGNED AND CONSTRUCTED SLOPES ARE CERTIFIED BY A REGISTERED ENGINEER EXPERIENCED IN GEOTECHNICAL ENGINEERING AND LICENSED IN THE STATE OF GEORGIA.
13. HDPE PIPE SHALL CONFORM TO THE REQUIREMENTS OF AASHTO M-294 AND AASHTO MP7, TYPE S & D. CONNECTIONS SHALL USE A RUBBER GASKET, WHICH CONFORMS TO ASTM F-477. INSTALLATION SHALL BE IN ACCORDANCE WITH ASTM RECOMMENDED PRACTICE D-2321, AASHTO SECTION 30, OR WITH SECTION 550 IN THE GEORGIA DOT STANDARD SPECIFICATIONS, CONSTRUCTION ROADS AND BRIDGES.
14. ALL RCP PIPE JOINTS SHALL BE BELL & SPIGOT TYPES WITH A RUBBER GASKET CONFORMING TO ASTM C-443. THE PIPE SHALL BE MANUFACTURED IN ACCORDANCE WITH AASHTO M-170 AND/ OR ASTM C-76. CLASS OF PIPE AND WALL THICKNESS SHALL BE IN ACCORDANCE WITH 1030-D, GEORGIA DOT SPECIFICATIONS, TABLE NO. 1. INSTALLATION SHALL BE IN ACCORDANCE WITH SECTION 550 OF THE GEORGIA DOT STANDARD SPECIFICATIONS, CONSTRUCTION OF ROADS AND BRIDGES.
15. MODULAR RETAINING WALL DESIGN MUST BE SUBMITTED TO THE EFFINGHAM COUNTY DEPARTMENT OF ENGINEERING FOR APPROVAL PRIOR TO CONSTRUCTION PLAN APPROVAL. WALL DESIGN MUST INCLUDE DETAILS AND SPECIFICATIONS THAT ARE SITE SPECIFIC AND MUST BE SIGNED AND SEALED BY A REGISTERED PROFESSIONAL ENGINEER IN THE STATE OF GEORGIA. ALL WALLS GREATER THAN FOUR (4) FEET IN HEIGHT SHALL INCLUDE A FENCE OR HANDRAIL ALONG THE TOP.
16. ALL UNDISTURBED BUFFERS SHALL BE IDENTIFIED WITH ORANGE, FOUR FOOT TREE-SAVE FENCING PRIOR TO ANY LAND DISTURBANCE (UDC SEC. 18-101.).

## GENERAL UTILITY NOTES

1. ELEVATIONS ARE BASED ON N.A.V.D. 1988.
2. EXISTING UNDERGROUND UTILITIES SHOWN ARE BASED ON AVAILABLE RECORDS AND FIELD EXAMINATION. THE POSITIONS ARE APPROXIMATE. THE CONTRACTOR SHALL INDEPENDENTLY DETERMINE THE EXACT LOCATION OF ALL EXISTING UTILITIES BEFORE COMMENCING WORK OR PURCHASING MATERIALS AND SHALL NOTIFY OWNERS REPRESENTATIVE OF ANY DISCREPANCIES OR UNCHARTED UTILITIES. THE CONTRACTOR SHALL AGREE TO BE FULLY RESPONSIBLE FOR ANY AND ALL DAMAGES WHICH MIGHT OCCUR THROUGH THE CONTRACTOR'S FAILURE TO EXACTLY LOCATE AND PRESERVE ANY AND ALL UNDERGROUND UTILITIES.
3. THE CONTRACTOR SHALL PROVIDE A MINIMUM OF THREE (3) WORKING DAYS NOTICE TO THE UTILITY COMPANY PRIOR TO EXCAVATION TO ALLOW TIME FOR EXISTING UTILITIES TO BE FLAGGED.
4. COORDINATE ALL GAS CONNECTIONS WITH LOCAL GAS COMPANY.
5. WHERE WATER LINES CROSS SANITARY SEWER LINES, WATER LINES SHALL BE PLACED 18"(MIN.) ABOVE SANITARY LINE. IF CLEARANCE IS LESS THAN 18", OR IF WATER LINE MUST BE BENEATH SANITARY SEWER, WATER AND SEWER LINES MUST BE D.I.P. AT THESE LOCATIONS AND WATER LINE MUST BE ENCASED WITH CONCRETE.
6. CONTRACTOR TO COORDINATE WITH ALL LOCAL UTILITY COMPANIES WHEN RELOCATING ANY EXISTING UTILITIES OR INSTALLING NEW UTILITIES.
7. SPRINKLER RISER LOCATION(S) TO BE COORDINATED WITH THE ARCHITECTURAL AND PLUMBING PLANS.
8. NO LANDSCAPING MAY BE PLACED WITHIN (7) FEET OF ANY UNDERGROUND UTILITY.
9. TRENCH WIDTHS SHALL BE NO LESS THAN (24) INCHES PLUS DIAMETER OF PIPE.
10. ALL MATERIALS, INCLUDING FITTINGS, SHALL BE INSPECTED BY LOCAL AUTHORITY AND ARCHITECT'S REPRESENTATIVE PRIOR TO INSTALLATION.
11. THE CONTRACTOR IS RESPONSIBLE FOR MAINTAINING A MARKED-UP SET OF DRAWINGS THAT INCLUDE AS-BUILT CONDITIONS. AS-BUILT OR RECORD DRAWINGS WILL BE REQUIRED FOR FINAL RELEASE OF THE PROJECT.
12. NO UTILITY WORK IS ALLOWED WITHIN A GEORGIA D.O.T. RIGHT-OF-WAY WITHOUT AN APPROVED PERMIT.

## SANITARY SEWER NOTES

1. CONTRACTOR TO COORDINATE SEWER CONNECTIONS WITH LOCAL GOVERNING AUTHORITY.
2. MANHOLE TOPS TO BE FLUSH IF LOCATED IN PAVEMENT AND 3" ABOVE FINISHED GRADE IF LOCATED OFF PAVEMENT.
3. DUCTILE IRON PIPE IS REQUIRED FOR SANITARY SEWER LINES:
    A. LINES HAVE LESS THAN (3) FEET OF COVER.
    B. WHEN LINE CROSSES UNDER STORM SEWER.
    C. WHEN LINE CROSSES STORM SEWER LINE WITH LESS THAN (2) FEET OF CLEARANCE BETWEEN THE TWO.
    D. WHEN LINE IS COVERED BY (16) FEET OF FILL OR MORE.
    E. IN WET OR UNSTABLE SOIL CONDITIONS WHERE BEDDING IS DIFFICULT.
    F. AT OUTSIDE DROP ON EXISTING MANHOLES.
4. CONNECTIONS TO EXISTING MANHOLES SHALL BE CORED AND BOOTED.
5. OUTSIDE DROPS SHALL BE INSTALLED ON MANHOLES WHERE INVERT OF SEWER LINE ENTERS THE MANHOLE AT (18) INCHES OR MORE ABOVE INVERT OF THE MANHOLE.
6. CLEANOUTS SHOWN ARE THOSE MINIMUM NEEDED TO PROVIDE ACCESS TO SANITARY LINE. CONTRACTOR TO PROVIDE ADDITIONAL CLEANOUTS AT MINIMUM INTERVALS OF (50) FEET ON SEWER LATERALS TO THE BUILDING.

## WATER SYSTEM NOTES

1. CONTRACTOR TO INSTALL ALL BENDS AND TEES NECESSARY FOR WATER LINE. ALL WATER LINES WILL BE BURIED WITH A TRACER WIRE WHICH IS TO BE BROUGHT UP AT ALL GATE VALVE LOCATIONS.
2. COORDINATE ALL WATER CONNECTIONS WITH LOCAL WATER DEPARTMENT.
3. TWO CUBIC FEET OF 57 STONE IS REQUIRED AT WET TAPS, TEES, BENDS, AND VALVE LOCATIONS. ALL FIRE HYDRANTS MUST HAVE FOUR CUBIC FEET.
4. DUCTILE IRON PIPE IS REQUIRED FOR WATER LINES:
    A. LINES HAVE LESS THAN THREE (3) FEET OF COVER.
    B. WHEN LINES CROSS UNDER SANITARY OR STORM LINE.
    C. WHEN LINE CROSSES SANITARY OR STORM SEWER LINE WITH LESS THAN TWO (2) FEET OF CLEARANCE BETWEEN THE TWO.
    D. WHEN LINE PASSES LATERALLY WITHIN ONE (1) FOOT OF SANITARY STRUCTURE.
    E. WHEN LINE IS COVERED BY (16) FEET OF FILL OR MORE.
    F. IN WET OR UNSTABLE SOIL CONDITIONS WHERE BEDDING IS DIFFICULT.
5. CONCRETE VALVE MARKERS SHALL BE INSTALLED WITHIN (2) FEET OF ALL GATE VALVE LOCATIONS.
6. WATER MAIN DEPTHS FOR 2"-8" LINES SHALL BE A MINIMUM OF (3) FEET FROM TOP OF THE PIPE TO FINISH GRADE. WATER MAIN DEPTHS FOR 10"-12" LINES SHALL BE NO LESS THAN (4') FROM TOP OF THE PIPE TO FINISH GRADE UNLESS OTHERWISE SPECIFIED.
7. ALL MECHANICAL JOINT GLANDS SHALL BE MEGA LUG TYPE.
8. ALL GATE VALVE BOXES SHALL BE ADJUSTABLE TYPE.
9. MINIMUM (24) HOUR NOTICE SHALL BE GIVEN PRIOR TO FLUSHING, CHLORINATING, AND PRESSURE TESTING OF WATER LINES.
10. GATE VALVES AND TEES SHALL NOT BE INSTALLED UNDER PAVEMENT OR CURBING UNLESS SPECIFICALLY NOTED ON DRAWINGS.
11. EXISTING WATER PRESSURE AND FLOW DATA.

    STATIC PRESSURE: 41 PSI
    RESIDUAL PRESSURE: 41 PSI
    FLOW: 1000 GPM
    EXISTING WATER LINE: 36"

### FIRE SPRINKLER NOTES

1. SPRINKLER SYSTEM SHALL CONFORM TO NFPA 13(LE).
2. SIAMESE HYDRANT (FDC) SHALL BE BRASS. PIPING FROM SIAMESE HYDRANT TO SPRINKLER RISER SHALL BE (4) INCH DUCTILE IRON.
3. 57 STONE TO BE INSTALLED AT BASE OF SIAMESE HYDRANT.
4. POST INDICATOR VALVE SHALL BE INSTALLED MINIMUM OF FORTY (40) FEET FROM BLDG.
5. SIAMESE HYDRANT SHALL BE PLACED A MINIMUM OF FIFTY (50) FEET AND A MAXIMUM OF ONE HUNDRED (100) FEET FROM NEAREST FIRE HYDRANT.
6. STANDPIPES SHALL BE IN ACCORDANCE WITH NFPA 101: 12.4.5.12.

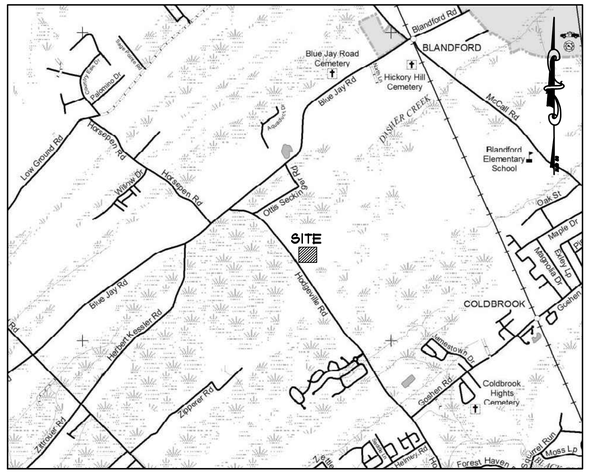


VICINITY MAP
NOT TO SCALE

# LEGEND

## HATCH PATTERNS & LINETYPES

- NEW STRUCTURE
- NEW SIDEWALK
- NEW CONCRETE SLAB/PAVING
- NEW ASPHALT PAVING (LIGHT DUTY)
- NEW ASPHALT PAVING (HEAVY DUTY)
- NEW ASPHALT PAVING (D.O.T.)
- EXISTING WETLANDS
- EXISTING BUILDINGS/STRUCTURES

- STORM LINE
- DOMESTIC WATER
- DOWNSPOUT LINE
- FORCE MAIN
- FIRE WATER MAIN
- GAS
- HOT WATER SUPPLY
- IRRIGATION LINE
- LIMITS OF CONSTRUCTION
- OVERHEAD COMMUNICATIONS
- OVERHEAD POWER
- OVERHEAD TELEPHONE
- POWER
- ROOF DRAIN LINE
- RECLAIMED WATER/RIGHT OF WAY
- SD1 - NON SENSITIVE
- SD1 - SENSITIVE
- STORM DRAIN
- TELEPHONE
- TREE PROTECTION
- UNDERGROUND COMMUNICATIONS
- UNDERGROUND POWER
- UNDERGROUND TELEPHONE
- UNDER DRAIN
- WATER LINE
- SEWER LINE
- CENTERLINE
- PROPERTY LINE
- NEW CHAIN LINK FENCE
- TREE LINE

## SYMBOLS

**WATER:**
- FIRE HYDRANT (FH)
- POST INDICATOR VALVE (PIV)
- FIRE DEPARTMENT CONNECTION (FDC)
- BACKFLOW PREVENTOR (BFP)
- WATER METER (WM)
- WATER VALVE (WV)

**SEWER:**
- SANITARY SEWER MANHOLE (SSMH)
- CLEAN OUT (CO)

**STORM:**
- JUNCTION BOX (JB)
- YARD DRAIN (YD)
- GRATE INLET (GI)
- INLINE DRAIN (ILD)
- CURB INLET (CI-A)
- CURB INLET (CI-BL)
- CURB INLET (CI-BR)
- CURB INLET (CI-C)
- FLARED END SECTION (FES)
- HEADWALL WINGS (HW-W)
- HEADWALL STRAIGHT (HW-S)
- OUTLET CONTROL STRUCTURE (OCS)

**MISC. SYMBOLS:**
- BENCHMARK (BM)
- NEW SIGN
- HANDICAP SYMBOL
- WATER FLOW

**EROSION:**
- D45 STORM DRAIN NUMBER
- Sd1-BB SOIL - STRUCTURAL
- Ds4 SOIL - VEGETATION
- 45 DEMOLITION NUMBER

**MISC. UTILITIES:**
- GAS METER (GM)
- UTILITY POLE (UP)
- LIGHT POLE (LP)

## ABBREVIATIONS

AASHTO - AMERICAN ASSOCIATION OF STATE HIGHWAY & TRANSPORTATION OFFICIALS
ALT. - ALTERNATE
ARCH. - ARCHITECTURAL
ASTM - AMERICAN SOCIETY FOR TESTING MATERIALS
BMCF - BROKEN CONCRETE MONUMENT FOUND
CB - CATCH BASIN
CF - CUBIC FOOT
CI - CURB INLET
CMF - CONCRETE MONUMENT FOUND
CMP CORRUGATED METAL PIPE
CONT. - CONTINUOUS
CY - CUBIC YARD
DIA, D, ø - DIAMETER
DIP - DUCTILE IRON PIPE
DOT - DEPARTMENT OF TRANSPORTATION
DSL - DOWN SPOUT LINE
E - EASTING
EWOC - EACH WAY ON CENTER
F.F.E. - FINISHED FLOOR ELEVATION
FG - FINISHED GRADE
FH - FIRE HYDRANT
F.P.E. - FINISHED PAD ELEVATION
G - GENERATOR
GABC - GRADED AGGREGATE BASE COURSE
GADOT - GEORGIA DEPT OF TRANSPORTATION
GI - GRATE INLET
GPM - GALLONS PER MINUTE
GT - GREASE TRAP
H/C - HANDICAP
HDPE - HIGH-DENSITY POLYETHYLENE PIPE
ID - INSIDE DIAMETER
I.E. - INVERT ELEVATION
IPF - IRON PIN FOUND
IPS - IRON PIN SET
LF - LINEAR FOOT
MAX. - MAXIMUM
MECH - MECHANICAL
MIN. - MINIMUM
N - NORTHING
OC - ON CENTER
OCEW - ON CENTER EACH WAY
OD - OUTSIDE DIAMETER
OPT. - OPTIONAL
PC - POINT OF CURVATURE
PI - POINT OF INTERSECTION
PP - POWER POLE
PSI - POUNDS PER SQUARE INCH
PT - POINT OF TANGENT
R - RADIUS
RCP - REINFORCED CONCRETE PIPE
RDL - ROOF DRAIN LINE
RE - RIM ELEVATION (TOP)
R/W, ROW - RIGHT OF WAY
SD - STORM DRAIN
SF - SQUARE FEET
SS - SANITARY SEWER
SSMH - SANITARY SEWER MANHOLE
STMH - STORM MANHOLE
T - TRANSFORMER
TC - TOP OF CURB
TG - TOP OF GUTTER
TH - THROAT ELEVATION
TP - TOP OF PAVEMENT
TRW - TOP OF RETAINING WALL
TW - TOP OF WALK
TYP - TYPICAL
W - WITH
W/O - WITHOUT
W - WATER
WI - WEIR INLET

EFFINGHAM COUNTY B.O.E. MAINTENANCE FACILITY
GUYTON EFFINGHAM COUNTY BOARD OF EDUCATION GEORGIA
JAMES W. BUCKLEY & ASSOCIATES INC. - ARCHITECTS, CIVIL ENGINEERS
SWAINSBORO, ALBANY, ROME, AND SAVANNAH GEORGIA



GENERAL NOTES

GEORGIA REGISTERED No. 36129 PROFESSIONAL ENGINEER WILLIAM D. MARTIN
GSWCC LEVEL II CERT # 0000043498

811 Know what's below. Call before you dig.

ISSUED FOR: BID
DRAWN BY: GOG
CHECKED BY: WDM
APPROVED BY: 12-20-2024
DATE
PROJECT NO. 22-065
SHEET NUMBER C0.0



J:\Effingham County Schools\22-065 Effingham County School Maintenance Facility\2 - Civil\EXHIBITS\GNS, 10-23-2024.dwg, 10/18/2024 1:19:28 AM

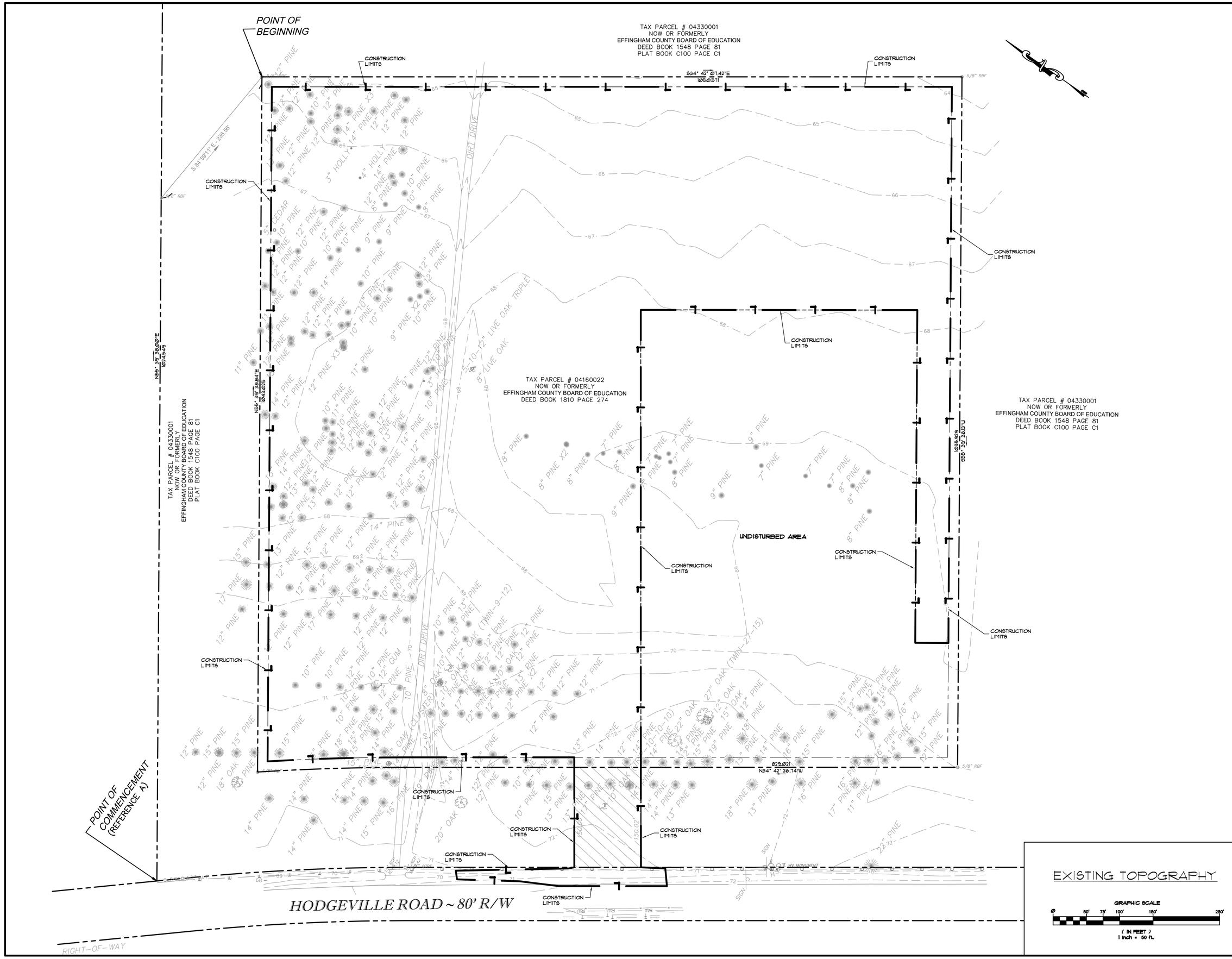


EXISTING TOPOGRAPHY

GRAPHIC SCALE

0 50' 75' 100' 150' 250'

( IN FEET )
1 inch = 50 ft.

# EFFINGHAM COUNTY B.O.E. MAINTENANCE FACILITY

GUYTON — EFFINGHAM COUNTY BOARD OF EDUCATION — GEORGIA

JAMES W. BUCKLEY & ASSOCIATES INC. - ARCHITECTS, CIVIL ENGINEERS

SVANNSBORO, ALBANY, ROME, AND SAVANNAH — GEORGIA

WARNING: Contractors, subcontractors, vendors and suppliers are advised that the contract documents consist of hard copies bearing the seal and signature of the Architect. Any other documents including but not limited to electronic files, blue or black line prints, addenda, practical addenda, and change orders only. Documents transmitted by parties other than Architect, whether in hard copy or electronic format shall not be considered part of contract documents and do not bear the seal and signature of the Architect. The contractor is advised that it is his responsibility and sole responsibility for verification that information utilized in bidding, development of shop drawings and construction of facility are identical to contract documents.

EXISTING TOPOGRAPHY

GEORGIA REGISTERED No. 36129 PROFESSIONAL ENGINEER WILLIAM D. MARTIN

GSWCC LEVEL II
CERT # 0000055308

811 Know what's below. Call before you dig.

ISSUED FOR: BID

DRAWN BY: GOG

CHECKED BY: WDM

APPROVED BY: 12-20-2024

DATE: 22-065

PROJECT NO.

SHEET NUMBER: C1.0



J:\Effingham County Schools\22-065 Effingham County School Maintenance Facility\2- Civil\EXISTING\C1.0 - 12-20-2024 Wed - 12/18/2024 1:43:39 PM

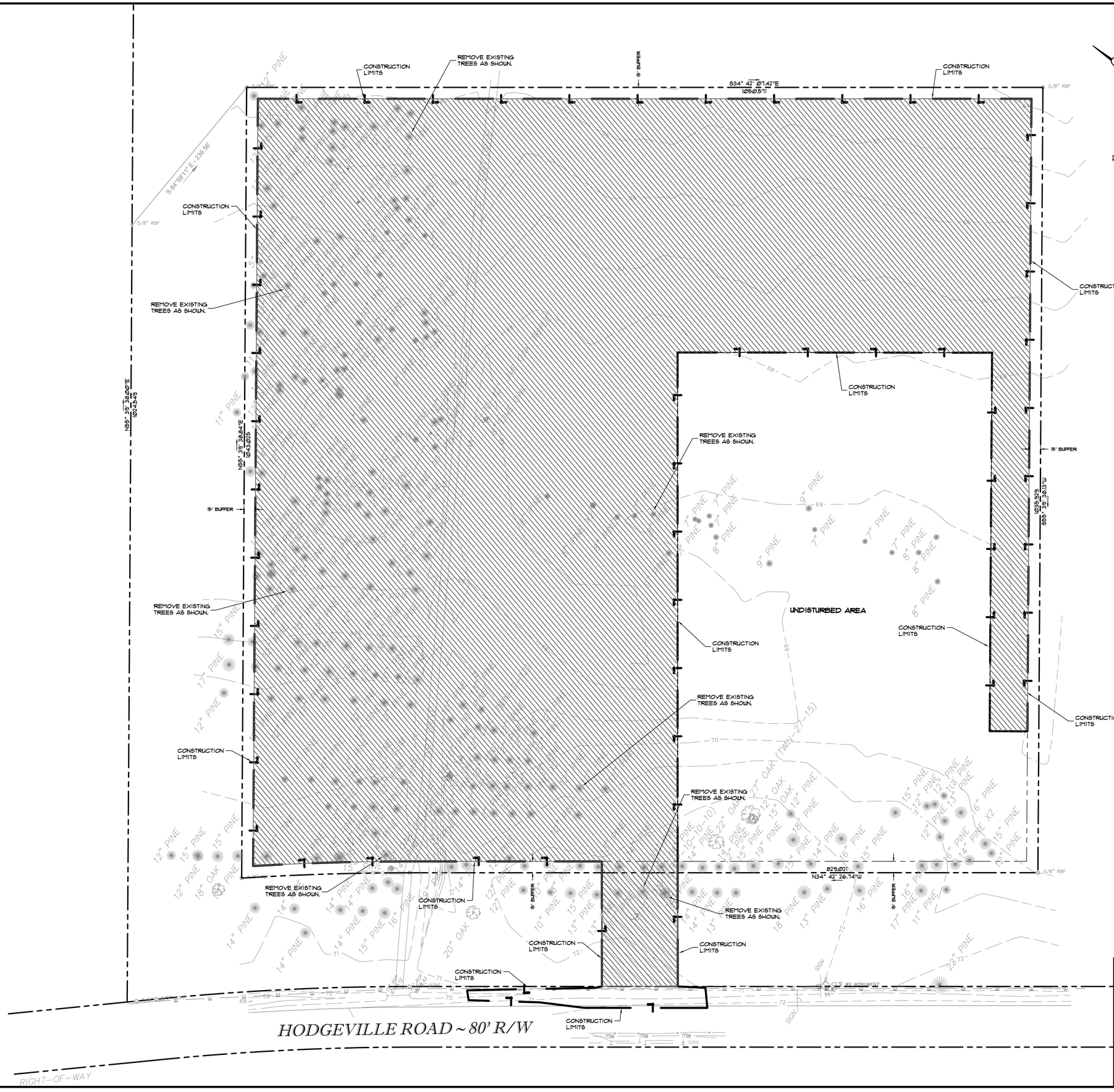


DEMOLITION NOTES:

1. CONTRACTOR SHALL REMOVE EXISTING TREES AND BUSHES AS SHOWN ON PLAN.
2. CONTRACTOR SHALL NOT DISTURB THE 15' BUFFER AS SHOWN ON PLAN.
3. CONTRACTOR TO COORDINATE WITH OWNER AND EFFINGHAM COUNTY PRIOR TO BEGINNING OF CONSTRUCTIONS.

## DEMOLITION PLAN

GRAPHIC SCALE

0 50' 75' 100' 150' 250'

( IN FEET )
1 inch = 50 ft.

EFFINGHAM COUNTY B.O.E. MAINTENANCE FACILITY
GUYTON
EFFINGHAM COUNTY BOARD OF EDUCATION
GEORGIA

JAMES W. BUCKLEY & ASSOCIATES INC. - ARCHITECTS, CIVIL ENGINEERS
SVANNSBORO, ALBANY, ROME, AND SAVANNAH
GEORGIA

WARNING: Contractors, subcontractors, vendors and suppliers are advised that the contract documents consist of hard copies signed and sealed by a registered professional and bearing the seal of a registered professional. Other than a black line prints, addenda, punchlist addenda, and change orders only. Documents reproduced by parties other than Architect, whether in hard copy or electronic format shall not be considered part of contract documents and do not bear the seal of the registered professional. The contractor, subcontractor, vendor and supplier are responsible for verification that information utilized in bidding, development of shop drawings and construction of facility are identical to contract documents.

DEMOLITION PLAN

GEORGIA REGISTERED No. 36128 PROFESSIONAL ENGINEER WILLIAM D. MARTIN

GSWCC LEVEL II
CERT # 0000056308

811 Know what's below. Call before you dig.

ISSUED FOR
BID

GOG
DRAWN BY

WDM
CHECKED BY

APPROVED BY

12-20-2024
DATE

22-065
PROJECT NO.

SHEET NUMBER
C1.1



J:\Effingham County Schools\22-065 Effingham County School Maintenance Facility\C - Civil\DWG\BASE - C1-22-2024.dwg, 12/19/2024 1:24:49 PM

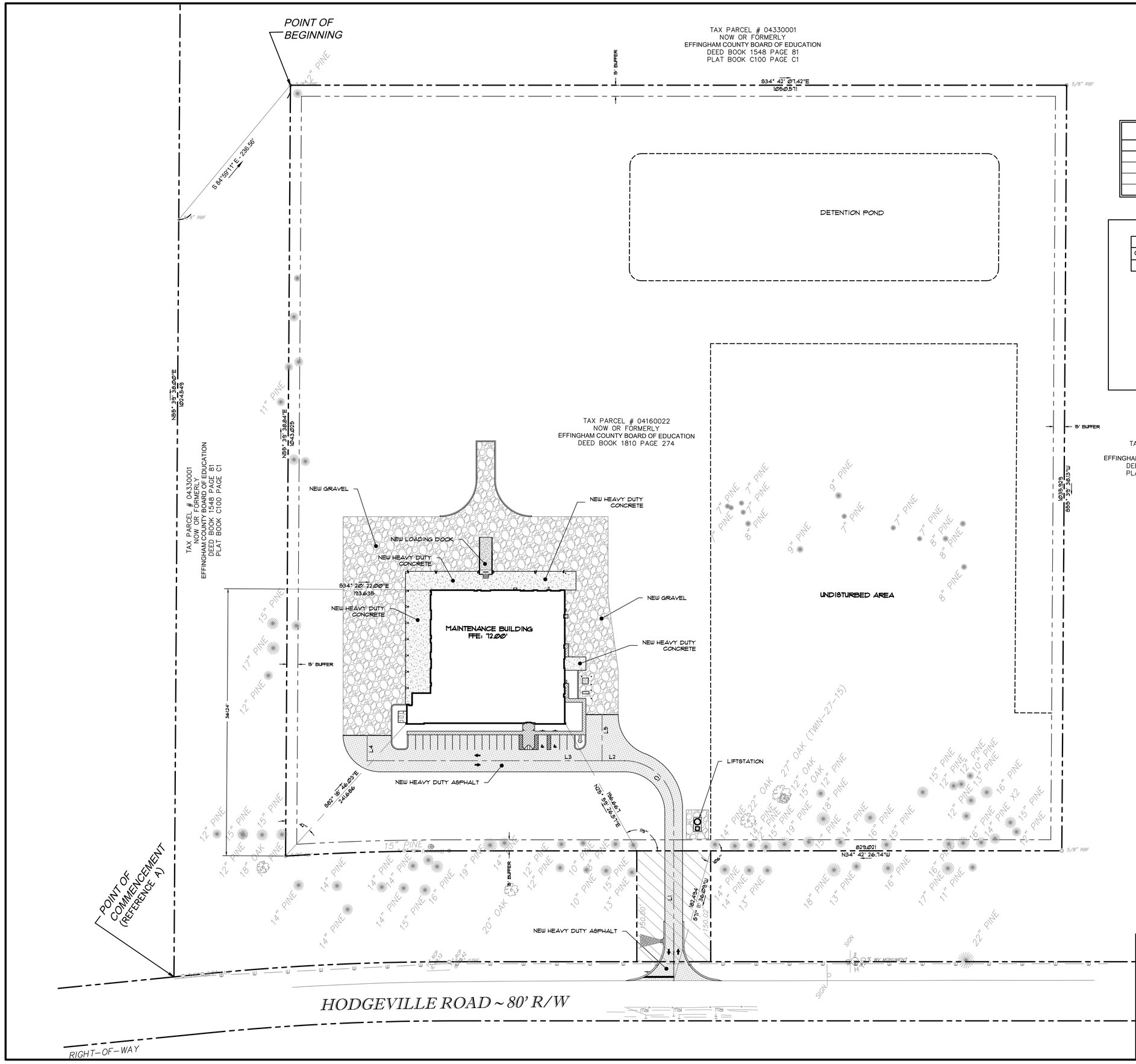


| PARKING SPACE TABLE | | |
|---|---|---|
| PARKING LOT | TOTAL SPACES | HC SPACES |
| A | 17 | 2 |
| | | |
| | | |
| TOTAL | 17 | 2 |

**Curve Table**

| Curve # | Length | Radius | Delta | Bearing | Chord | Tangent |
|---|---|---|---|---|---|---|
| C1 | 105.24 | 67.00 | 90.00 | N10° 17' 32.24"E | 94.75 | 67.00 |

**Line Table**

| Line # | Length | Direction |
|---|---|---|
| L1 | 230.519 | S55° 17' 31.21"W |
| L2 | 30.001 | S34° 42' 26.74"E |
| L3 | 317.917 | S34° 42' 26.74"E |
| L4 | 33.993 | S55° 17' 33.26"W |
| L5 | 62.030 | S55° 17' 33.26"W |

# OVERALL SITE PLAN

GRAPHIC SCALE

0 50' 75' 100' 150' 250'

( IN FEET )
1 inch = 50 ft.

EFFINGHAM COUNTY B.O.E. MAINTENANCE FACILITY
GUYTON
EFFINGHAM COUNTY BOARD OF EDUCATION
GEORGIA

JAMES W. BUCKLEY & ASSOCIATES INC. - ARCHITECTS, CIVIL ENGINEERS
SVANNSBORO, ALBANY, ROME, AND SAVANNAH
GEORGIA

OVERALL SITE PLAN

WARNING: Contractors, subcontractors, vendors and suppliers are advised that the contract documents consist of hard copy and electronic format drawings and specifications sealed and signed by a registered professional. Other than a black line prints, addenda, punchlist addenda, and change orders only. Documents transmitted by parties other than Architect, whether in hard copy or electronic format shall not be considered part of contract documents and do not bind the Architect. Contractors, subcontractors, vendors and suppliers are responsible for verification that information utilized in bidding, development of shop drawings and construction of facility are identical to contract documents.

GEORGIA REGISTERED PROFESSIONAL ENGINEER No. 36129 WILLIAM D. MARTIN

GSWCC LEVEL II
CERT # 0000065308

811 Know what's below. Call before you dig.

ISSUED FOR
BID

GOG
DRAWN BY
CHECKED BY
WDM
APPROVED BY
12-20-2024
DATE
22-065
PROJECT NO.

SHEET NUMBER
C2.0



J:\Effingham County Schools\22-065 Effingham County School Maintenance Facility\C_Civil\01CIVIL\C2.0_OVERALL SITE PLAN.dwg, 12/19/2024 1:24:49 PM

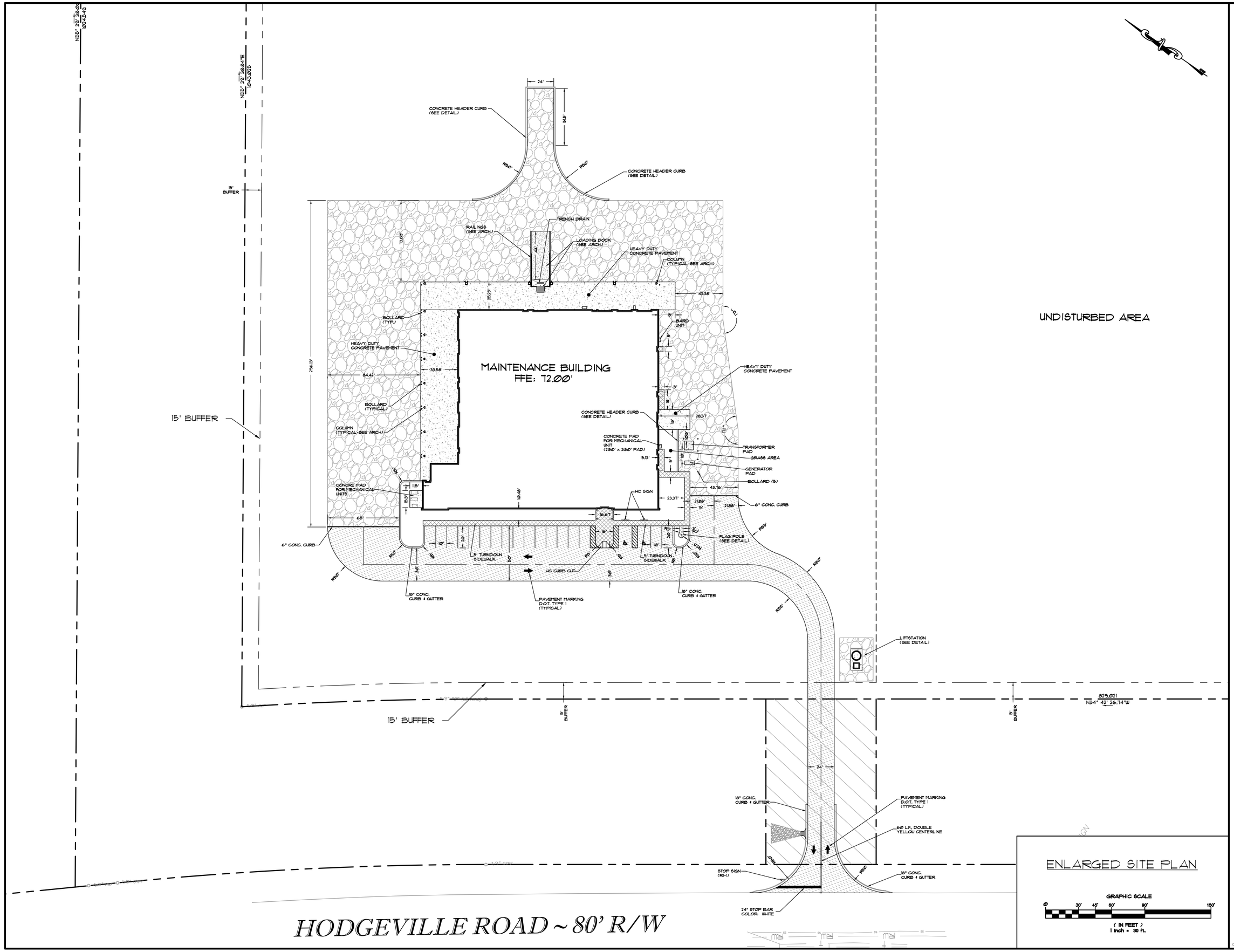


EFFINGHAM COUNTY B.O.E. MAINTENANCE FACILITY
GUYTON
EFFINGHAM COUNTY BOARD OF EDUCATION
GEORGIA

JAMES W. BUCKLEY & ASSOCIATES INC. - ARCHITECTS, CIVIL ENGINEERS
SVANNSBORO, ALBANY, ROME, AND SAVANNAH
GEORGIA

ENLARGED SITE PLAN

WARNING: Contractors, subcontractors, vendors and suppliers are advised that the contract documents consist of hard copy prints and attachments, bearing the seal and signature of the Architect, and that no other copy or version thereof, Not on Marks line prints, addenda, postbid addenda, and changes, shall be considered part of contract documents and do not, than Architect, whether in hard copy or electronic format shall not be considered part of contract documents and do not, for verification that information utilized in bidding, development of shop drawings and construction of facility are identical to contract documents.

GEORGIA REGISTERED No. 36129 PROFESSIONAL ENGINEER WILLIAM D. MARTIN
GSWCC LEVEL II CERT # 0000000708

811 Know what's below. Call before you dig.

ISSUED FOR
BID

GOG
DRAWN BY
CHECKED BY
WDM
APPROVED BY
12-20-2024
DATE
22-065
PROJECT NO.

SHEET NUMBER
C2.1



J:\Effingham County Schools\22-065 Effingham County School Maintenance Facility\C - Civil\01-DWG\ENLARGE - C2.1\12-20-2024 Jerry 3:37:00\2024 10:27:46 PM

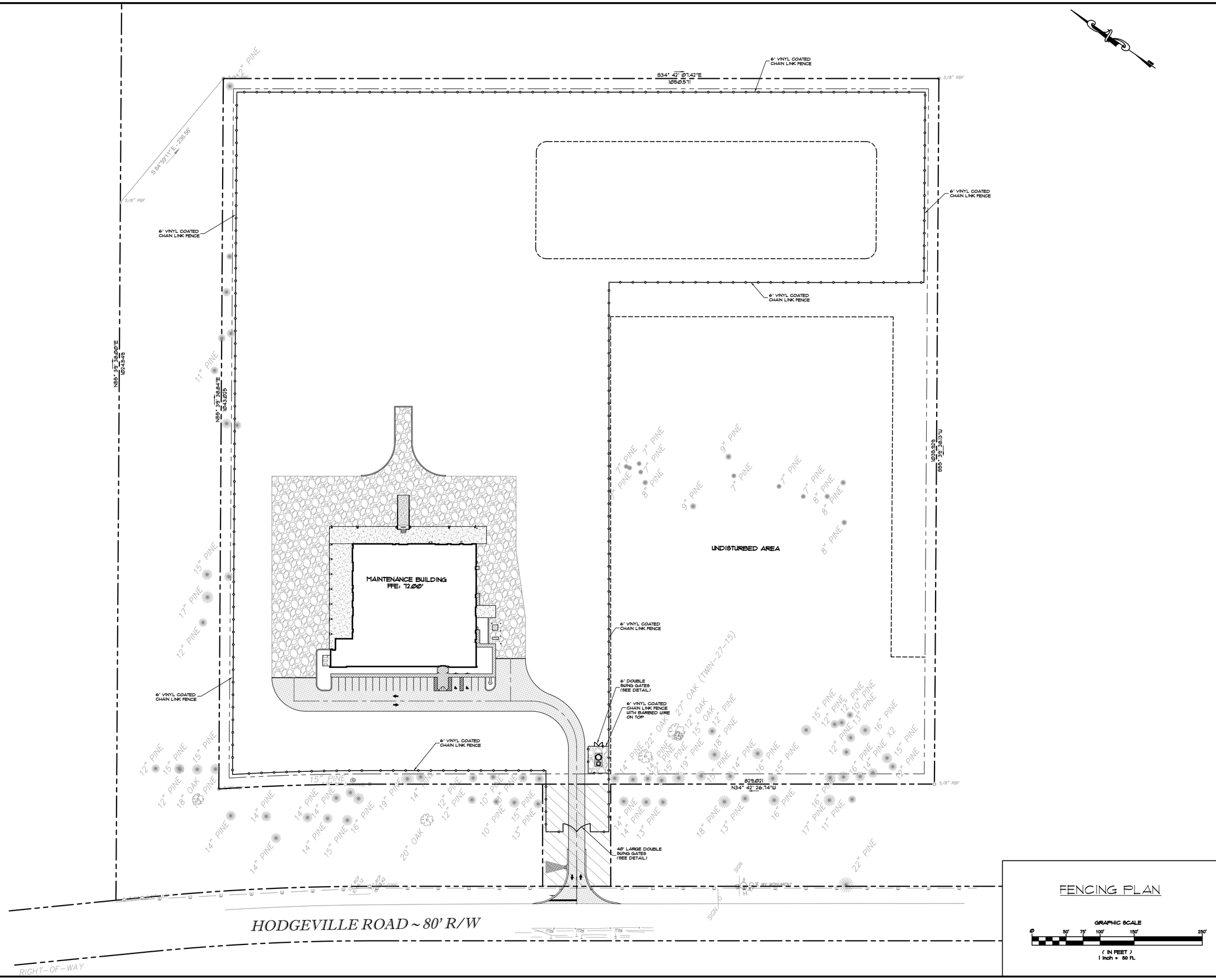


## FENCING PLAN

GRAPHIC SCALE

0 50' 75' 100' 150' 250'

( IN FEET )
1 inch = 50 ft.

# EFFINGHAM COUNTY B.O.E. MAINTENANCE FACILITY

GUYTON — EFFINGHAM COUNTY BOARD OF EDUCATION — GEORGIA

JAMES W. BUCKLEY & ASSOCIATES INC. - ARCHITECTS, CIVIL ENGINEERS
SVANNSBORO, ALBANY, ROME, AND SAVANNAH — GEORGIA

FENCING PLAN



GEORGIA REGISTERED No. 36129 PROFESSIONAL ENGINEER WILLIAM D. MARTIN

GSWCC LEVEL II
CERT # 0000000308

811 Know what's below. Call before you dig.

ISSUED FOR: BID

GOG — DRAWN BY
WDM — CHECKED BY
12-20-2024 — APPROVED BY
22-065 — DATE
PROJECT NO.

SHEET NUMBER
C2.2



J:\Effingham County Schools\22-065 Effingham County School Maintenance Facility\D - Civil\DWG\BASE, 10-23-2024.dwg, 12/19/2024 10:10:33 PM

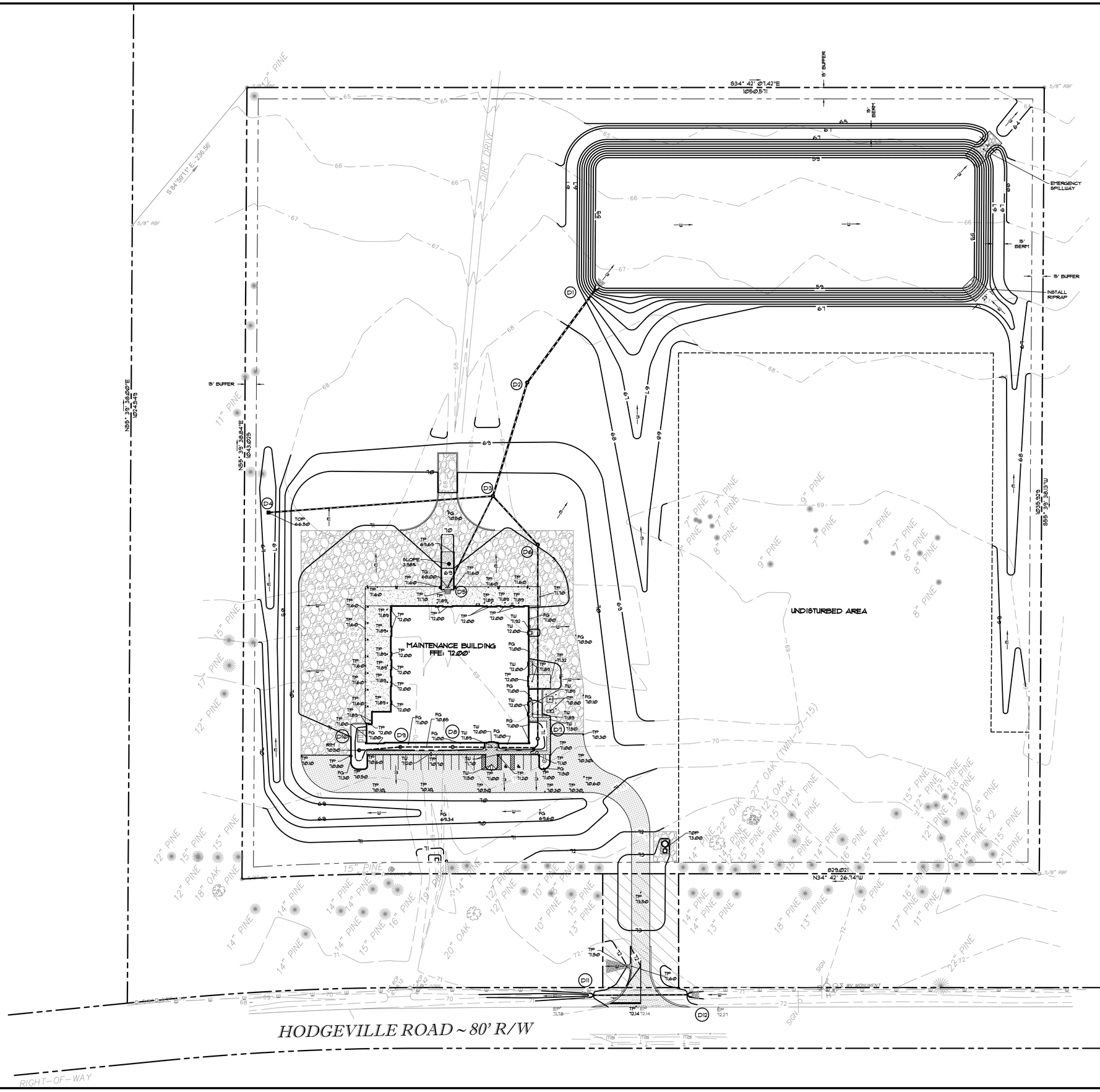


# OVERALL GRADING AND DRAINAGE PLAN

GRAPHIC SCALE

0 50' 75' 100' 150' 250'

( IN FEET )
1 inch = 50 ft.

EFFINGHAM COUNTY B.O.E. MAINTENANCE FACILITY
GUYTON EFFINGHAM COUNTY BOARD OF EDUCATION GEORGIA

JAMES W. BUCKLEY & ASSOCIATES INC. - ARCHITECTS, CIVIL ENGINEERS
SVANNSBORO, ALBANY, ROME, AND SAVANNAH GEORGIA



OVERALL GRADING AND DRAINAGE PLAN

GEORGIA REGISTERED PROFESSIONAL ENGINEER No. 36129 WILLIAM D. MARTIN

GSWCC LEVEL II
CERT # 0000054308

811 Know what's below. Call before you dig.

ISSUED FOR
BID

GOG
DRAWN BY
CHECKED BY
WDM
APPROVED BY
12-20-2024
DATE
22-065
PROJECT NO.

SHEET NUMBER
C3.0



J:\Effingham County Schools\22-065 Effingham County School Maintenance Facility\C - Civil\01CD\C3.0.DWG, 12/20/2024 1:13:07 PM

## STORM DRAINAGE SCHEDULE

| PIPE FROM | PIPE TO | SIZE (IN) | LENGTH (FT) | SLOPE (%) | INVERTS DOWNSTREAM | INVERTS UPSTREAM |
|---|---|---|---|---|---|---|
| D1 | D2 | 24 | 151 | 0.50 | 59.97 | 60.73 |
| D2 | D3 | 24 | 156 | 0.50 | 60.73 | 61.51 |
| D3 | D4 | 18 | 297 | 0.50 | 61.51 | 63.00 |
| **D3 | **D5 | 15 | 135 | 1.00 | 61.51 | 62.85 |
| D3 | D6 | 18 | 87 | 1.00 | 62.67 | 63.54 |
| D6 | D7 | 15 | 255 | 1.00 | 63.54 | 66.09 |
| D7 | D8 | 12 | 122 | 0.50 | 66.09 | 67.31 |
| D8 | D9 | 12 | 69 | 0.50 | 67.31 | 67.65 |
| D9 | D10 | 12 | 54 | 0.50 | 67.65 | 67.92 |
| | | | | | | |
| **D11 | **D12 | 15 | 127 | 0.30 | 69.87 | 70.25 |
| | | | | | | |
| | | | | | | |

| STRUCTURE NO | TYPE | INV. ELEV. | RIM. ELEV. | THROAT. ELEV. | NOTES. |
|---|---|---|---|---|---|
| D1 | F.E.S. | 59.97 | --- | | |
| D2 | MANHOLE | 60.73 | 68.50 | | |
| D3 | MANHOLE | 61.51 | 70.50 | | |
| D4 | GRATE INLET | 63.00 | 66.50 | | |
| D5 | GRATE INLET | 62.85 | 68.00 | | SEE DETAIL |
| D6 | MANHOLE | 63.54 | 71.00 | | |
| D7 | YARD INLET | 66.09 | 70.50 | | |
| D8 | YARD INLET | 67.31 | 70.50 | | |
| D9 | YARD INLET | 67.31 | 70.50 | | |
| D10 | YARD INLET | 67.92 | 70.50 | | |
| D11 | F.E.S. | 69.87 | --- | | |
| D12 | F.E.S. | 70.25 | --- | | |

**NOTE:**
** - REINFORCED CONCRETE PIPE (RCP)
**F.E.S** - FLARED END SECTION

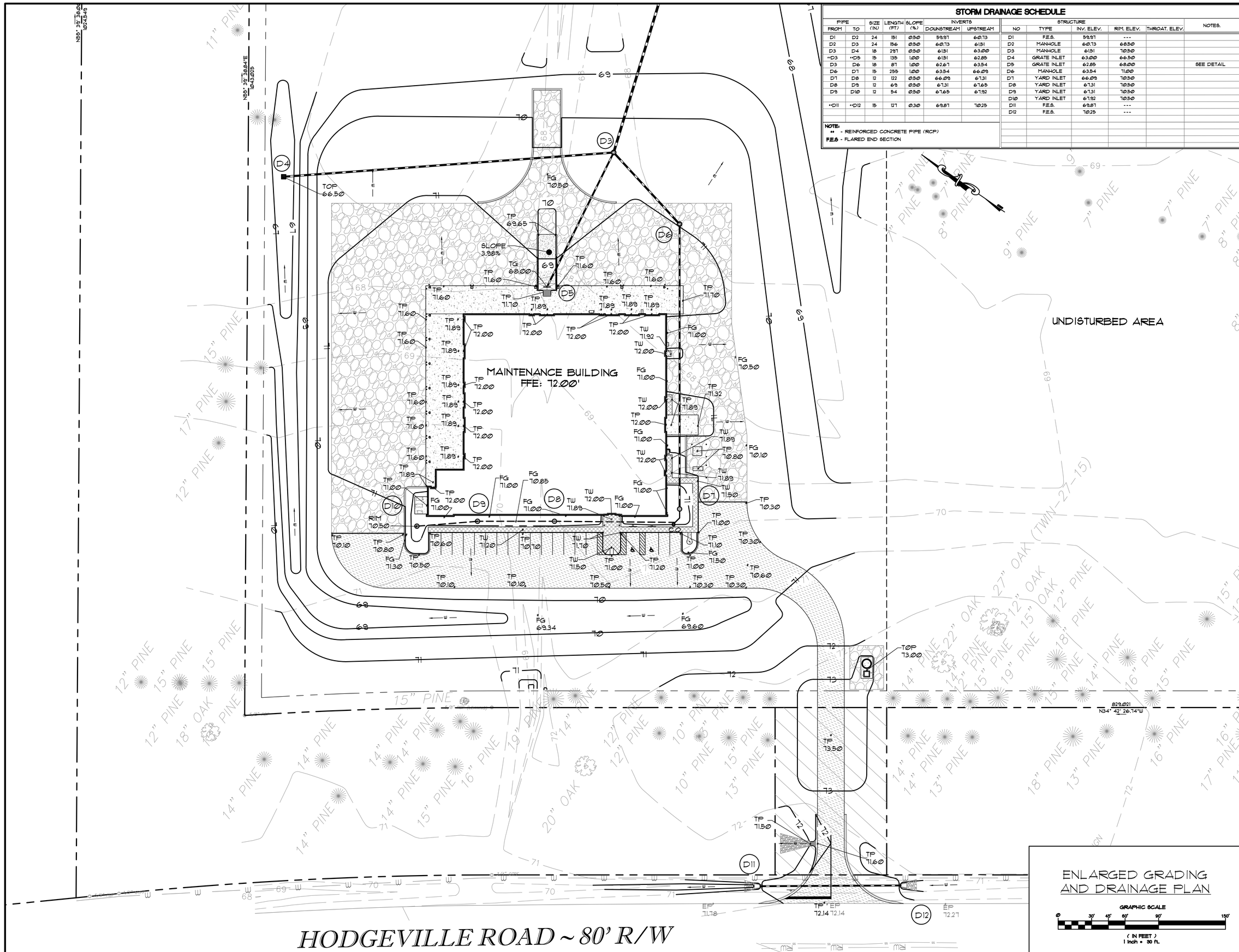


EFFINGHAM COUNTY B.O.E. MAINTENANCE FACILITY
GUYTON
EFFINGHAM COUNTY BOARD OF EDUCATION
GEORGIA

JAMES W. BUCKLEY & ASSOCIATES INC. - ARCHITECTS, CIVIL ENGINEERS
SVANNSBORO, ALBANY, ROME, AND SAVANNAH
GEORGIA

ENLARGED GRADING AND DRAINAGE PLAN



GEORGIA REGISTERED No. 36129 PROFESSIONAL ENGINEER WILLIAM D. MARTIN

GSWCC LEVEL II CERT # 0000055308

811 Know what's below. Call before you dig.

ISSUED FOR: BID

DRAWN BY: GOG

CHECKED BY: WDM

APPROVED BY:

DATE: 12-20-2024

PROJECT NO.: 22-065

SHEET NUMBER: C3.1

J:\Effingham County Schools\22-065 Effingham County Schools Maintenance Facility\2 - Contract\DWG\ASAE, 10-20-2024.dwg, 12/17/2024 3:14:44 PM

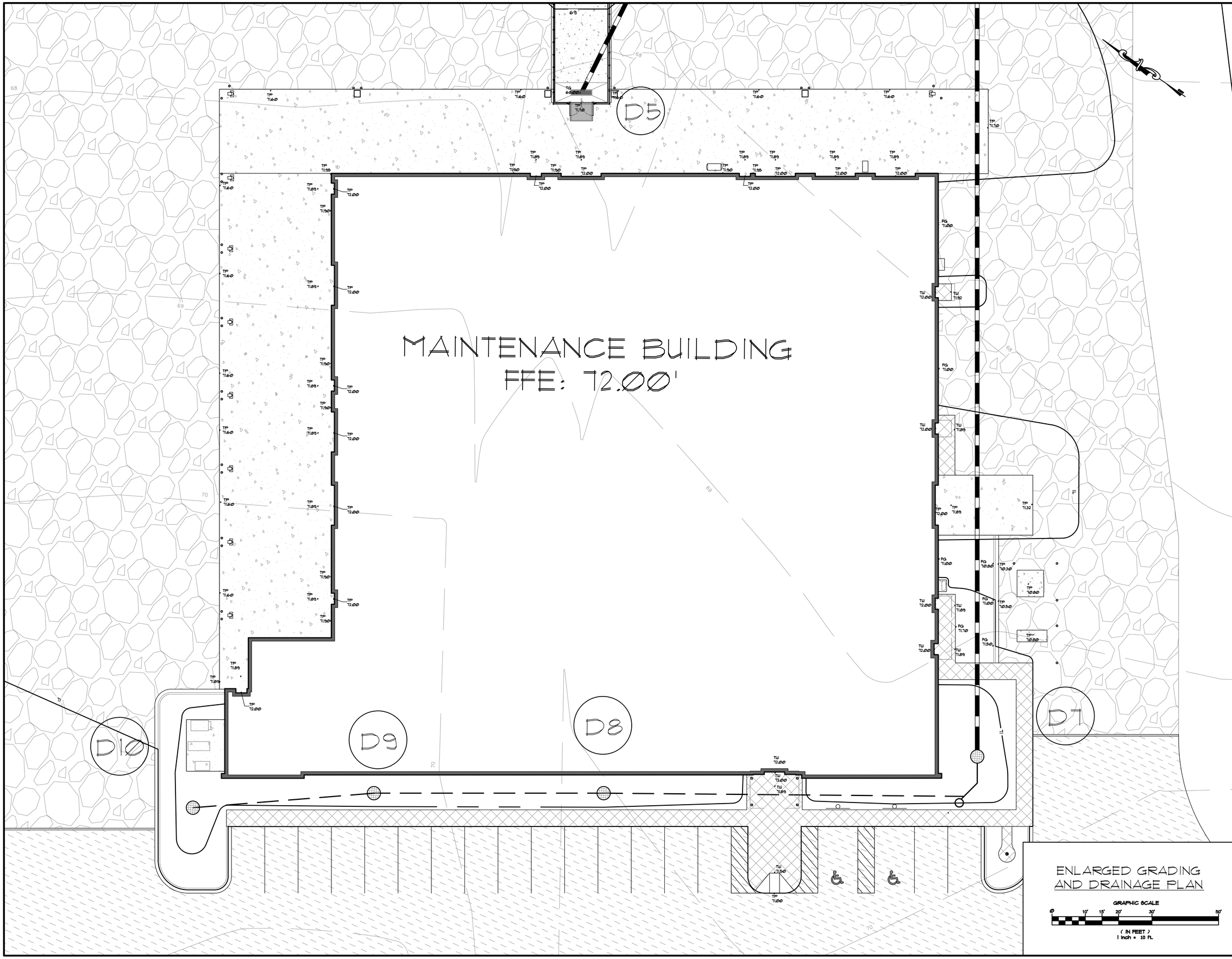


ENLARGED GRADING AND DRAINAGE PLAN

GRAPHIC SCALE

0 10' 15' 20' 30' 50'

( IN FEET )
1 inch = 10 ft.

EFFINGHAM COUNTY B.O.E. MAINTENANCE FACILITY
GUYTON
EFFINGHAM COUNTY BOARD OF EDUCATION
GEORGIA

JAMES W. BUCKLEY & ASSOCIATES INC. - ARCHITECTS, CIVIL ENGINEERS
SVANNSBORO, ALBANY, ROME, AND SAVANNAH
GEORGIA

ENLARGED GRADING AND DRAINAGE PLAN

WARNING: Contractors, subcontractors, vendors and suppliers are advised that the contract documents consist of drawings and specifications, and that no other documents are authorized for use in bidding, negotiating, or building from other than Architect, whether in hard copy or electronic format shall not be considered part of contract documents and do not represent the design of the project. The contractor is responsible for all dimensions and conditions on the job site and is responsible for verification that information utilized in bidding, development of shop drawings and construction of facility are identical to contract documents.

GEORGIA REGISTERED PROFESSIONAL ENGINEER No. 36128 WILLIAM D. MARTIN

GSWCC LEVEL II
CERT # 0000056308

811 Know what's below. Call before you dig.

ISSUED FOR
BID

GOG
DRAWN BY

CHECKED BY
WDM

APPROVED BY
12-20-2024
DATE

22-065
PROJECT NO.

SHEET NUMBER
C3.2



J:\Effingham County Schools\22-065 Effingham County School Maintenance Facility\C - Civil\DWG\ASCE - C3.2\2024 dwg, 12/19/2024 11:16:29 PM

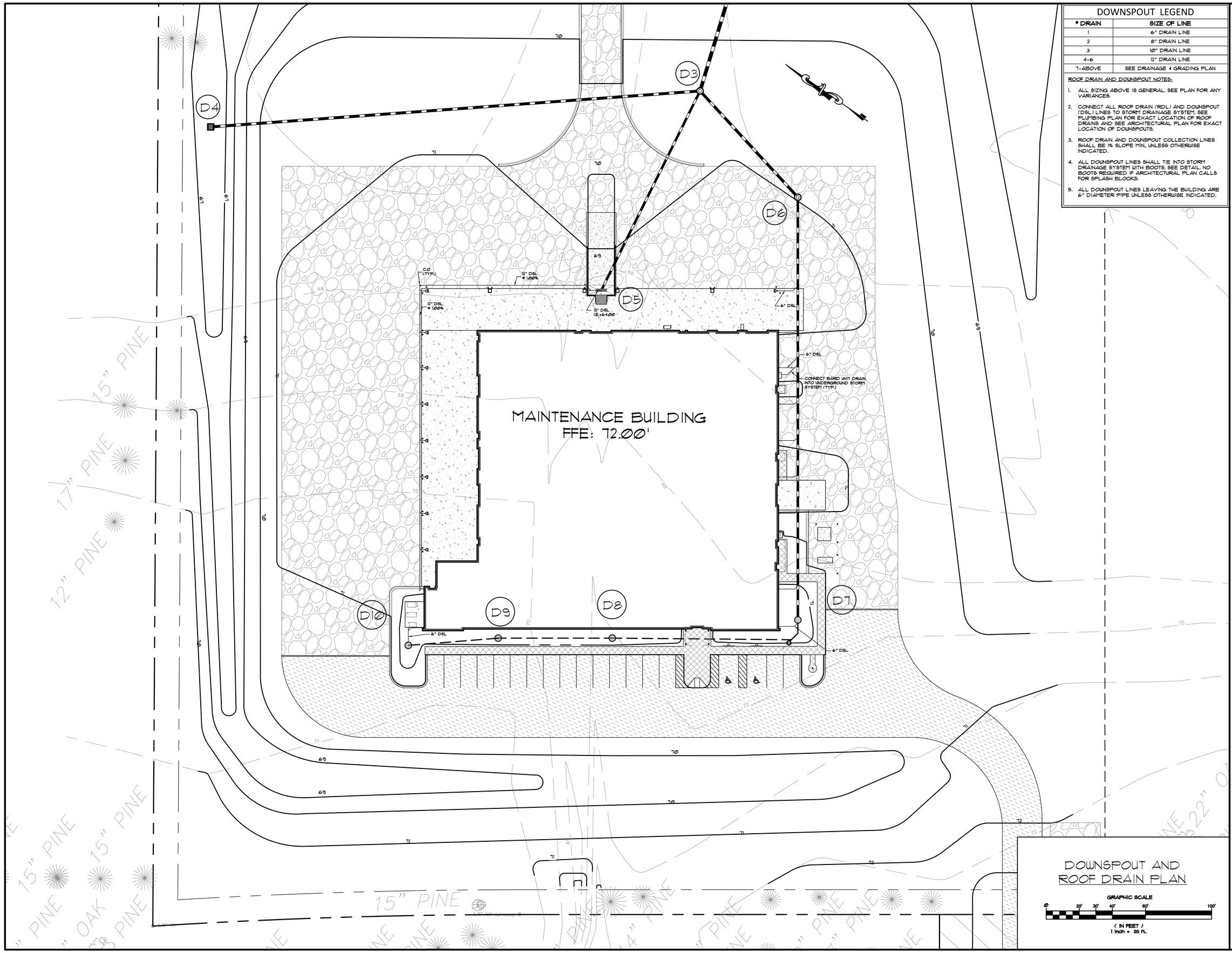


## DOWNSPOUT LEGEND

| # DRAIN | SIZE OF LINE |
|---|---|
| 1 | 6" DRAIN LINE |
| 2 | 8" DRAIN LINE |
| 3 | 10" DRAIN LINE |
| 4-6 | 12" DRAIN LINE |
| 7-ABOVE | SEE DRAINAGE & GRADING PLAN |

ROOF DRAIN AND DOWNSPOUT NOTES:

1. ALL SIZING ABOVE IS GENERAL, SEE PLAN FOR ANY VARIANCES.
2. CONNECT ALL ROOF DRAIN (RDL) AND DOWNSPOUT (DSL) LINES TO STORM DRAINAGE SYSTEM, SEE PLUMBING PLAN FOR EXACT LOCATION OF ROOF DRAINS AND SEE ARCHITECTURAL PLAN FOR EXACT LOCATION OF DOWNSPOUTS.
3. ROOF DRAIN AND DOWNSPOUT COLLECTION LINES SHALL BE 1% SLOPE MIN, UNLESS OTHERWISE INDICATED.
4. ALL DOWNSPOUT LINES SHALL TIE INTO STORM DRAINAGE SYSTEM WITH BOOTS, SEE DETAIL. NO BOOTS REQUIRED IF ARCHITECTURAL PLAN CALLS FOR SPLASH BLOCKS.
5. ALL DOWNSPOUT LINES LEAVING THE BUILDING ARE 6" DIAMETER PIPE UNLESS OTHERWISE INDICATED.

DOWNSPOUT AND ROOF DRAIN PLAN

GRAPHIC SCALE

0 20' 30' 40' 80' 100'

( IN FEET )
1 inch = 20 ft.

EFFINGHAM COUNTY B.O.E. MAINTENANCE FACILITY
GUYTON
EFFINGHAM COUNTY BOARD OF EDUCATION
GEORGIA

JAMES W. BUCKLEY & ASSOCIATES INC. - ARCHITECTS, CIVIL ENGINEERS
SWAINSBORO, ALBANY, ROME, AND SAVANNAH
GEORGIA



DOWNSPOUT AND ROOF DRAIN PLAN

GEORGIA REGISTERED No. 36129 PROFESSIONAL ENGINEER
WILLIAM D. MARTIN

GSWCC LEVEL II
CERT # 0000095438

811
Know what's below.
Call before you dig.

ISSUED FOR
BID

GOG
DRAWN BY

CHECKED BY
WDM
APPROVED BY
12-20-2024
DATE
22-065
PROJECT NO.

SHEET NUMBER
C3.3



J:\Effingham County Schools\22-065 Effingham County Schools Maintenance Facility\2 - Cad\MAINTENANCE, 10-30-2024.dwg, 12/19/2024 3:20:33 PM

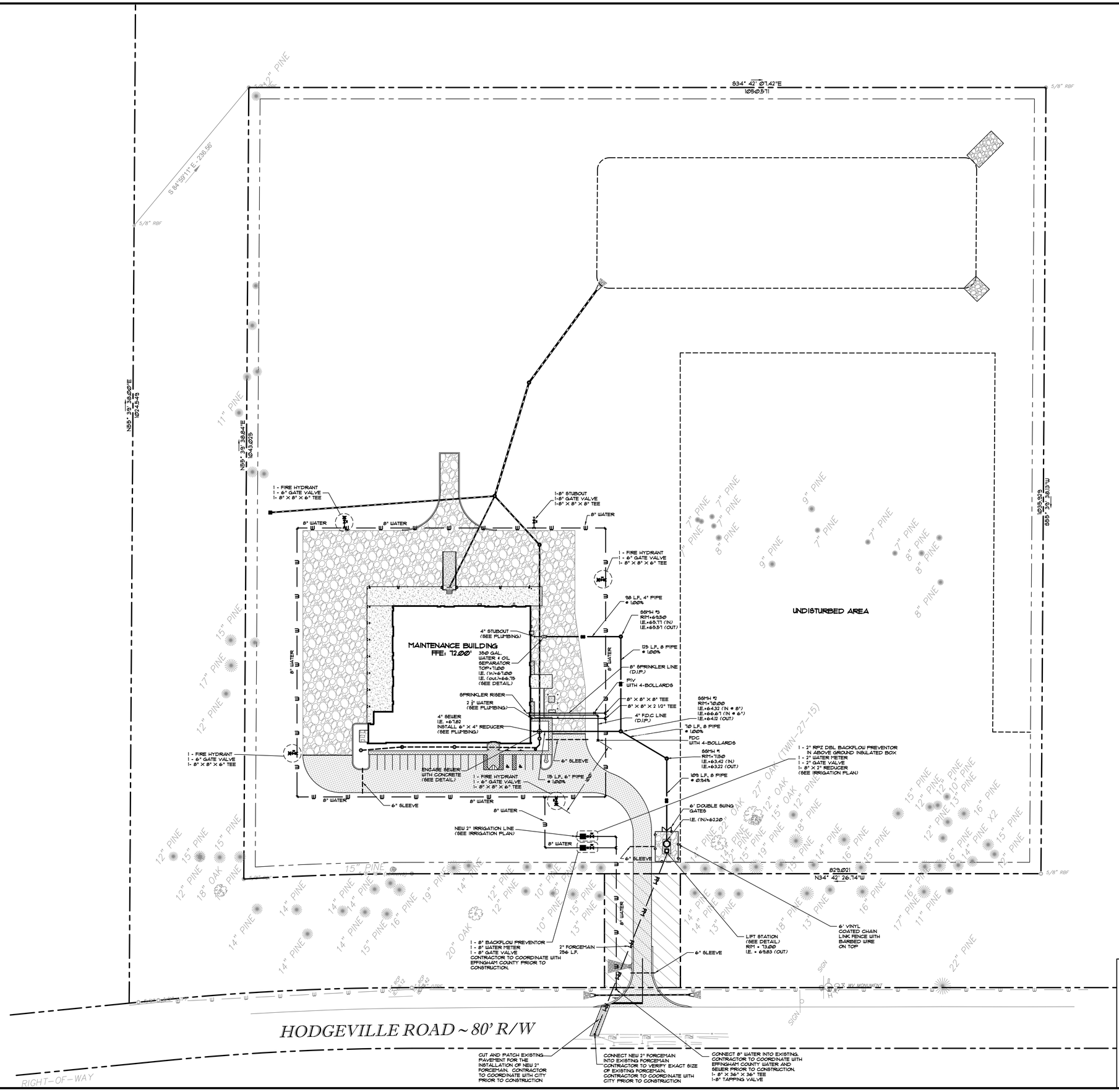


# UTILITY PLAN

GRAPHIC SCALE

0 50' 75' 100' 150' 250'

( IN FEET )
1 inch = 50 ft.

EFFINGHAM COUNTY B.O.E. MAINTENANCE FACILITY
GUYTON — EFFINGHAM COUNTY BOARD OF EDUCATION — GEORGIA

JAMES W. BUCKLEY & ASSOCIATES INC. - ARCHITECTS, CIVIL ENGINEERS
SWAINSBORO, ALBANY, ROME, AND SAVANNAH — GEORGIA

UTILITY PLAN

WARNING: Contractors, subcontractors, vendors and suppliers are advised that the contract documents consist of drawings and specifications bearing the seal and signature of the Architect. Documents issued in electronic format other than a black/white prints, addenda, punchlist addendas, and change orders only. Documents transmitted by parties other than Architect, whether in hard copy or electronic format shall not be considered part of contract documents and do not represent the design of the project. Contractors, subcontractors, vendors and suppliers are solely responsible for verification that information utilized in bidding, development of shop drawings and construction of facility are identical to contract documents.

GEORGIA REGISTERED No. 30129 PROFESSIONAL ENGINEER
WILLIAM D. MARTIN
GSWCC LEVEL II
CERT # 0000065308

811 Know what's below. Call before you dig.

ISSUED FOR
BID

GOG
DRAWN BY
CHECKED BY
WDM
APPROVED BY
12-20-2024
DATE
22-065
PROJECT NO.

SHEET NUMBER
C4.0



J:\Effingham County Schools\22-065 Effingham County School Maintenance Facility\C - Cad\01\C4.0.dwg, 12/19/2024 4:24:49 PM

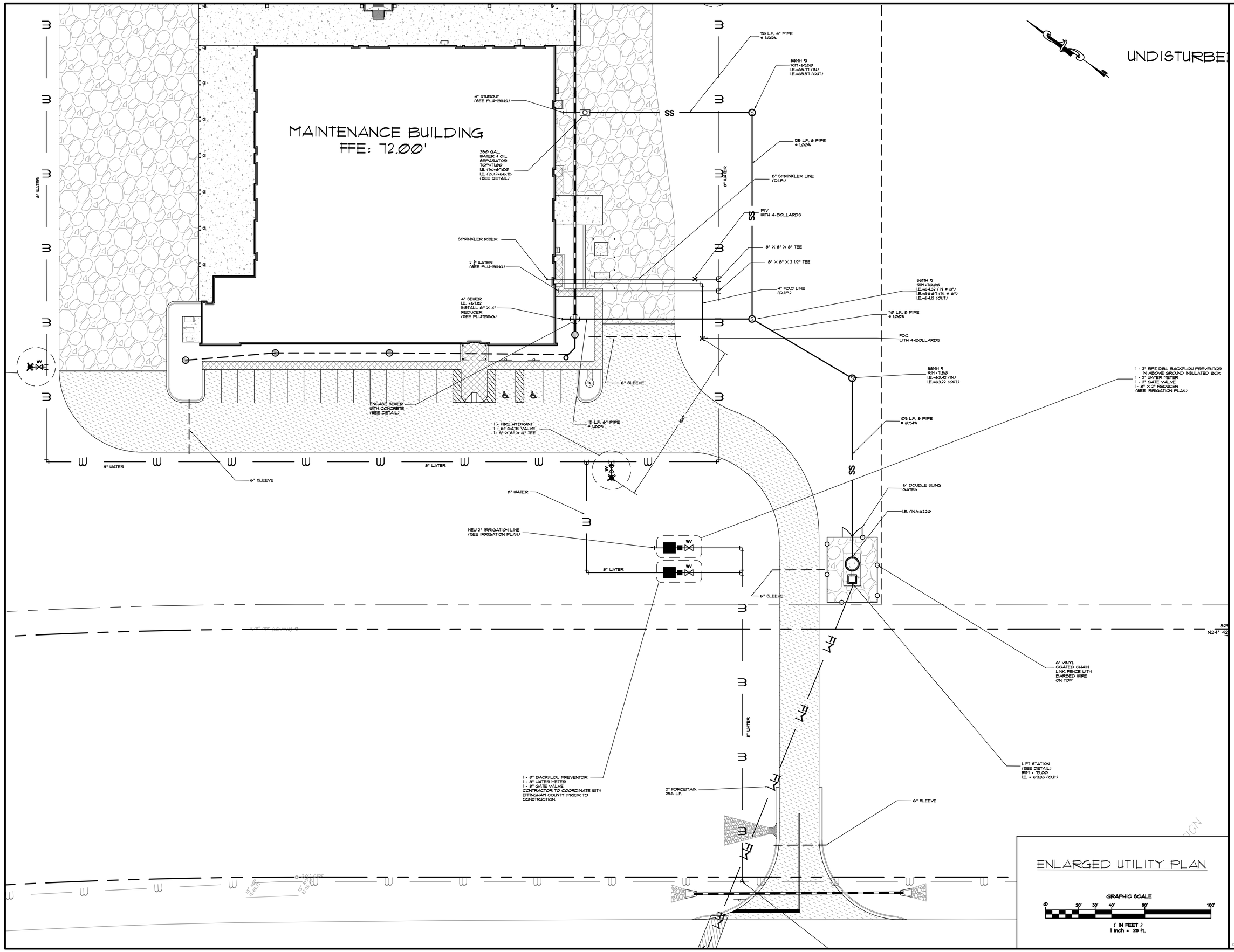


EFFINGHAM COUNTY B.O.E. MAINTENANCE FACILITY
GUYTON
EFFINGHAM COUNTY BOARD OF EDUCATION
GEORGIA

JAMES W. BUCKLEY & ASSOCIATES INC. - ARCHITECTS, CIVIL ENGINEERS
SVANNSBORO, ALBANY, ROME, AND SAVANNAH
GEORGIA

ENLARGED UTILITY PLAN



GEORGIA REGISTERED No. 36129 PROFESSIONAL ENGINEER WILLIAM D. MARTIN

GSWCC LEVEL II CERT # 0000055708

811 Know what's below. Call before you dig.

ISSUED FOR
BID

GOG
DRAWN BY

WDM
CHECKED BY

12-20-2024
APPROVED BY

22-065
DATE

PROJECT NO.

SHEET NUMBER
C4.1



J:\Effingham County Schools\22-065 Effingham County School Maintenance Facility\2- Const\DWG\ENLARGED UTILITY PLAN.dwg, 12/17/2024 4:00:37 PM


## SIGN DETAIL

1

NOT TO SCALE

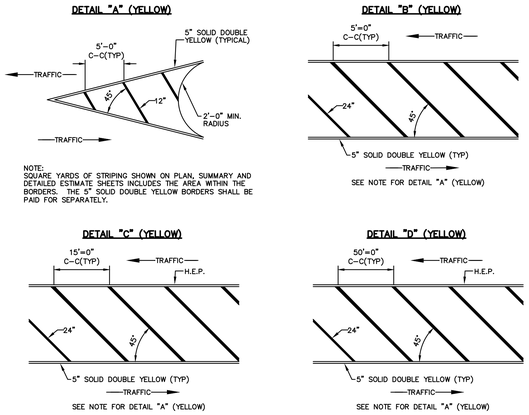


NOTE:
SQUARE YARDS OF STRIPING SHOWN ON PLAN, SUMMARY AND DETAILED ESTIMATE SHEETS INCLUDES THE AREA WITHIN THE BORDERS. THE 5" SOLID DOUBLE YELLOW BORDERS SHALL BE PAID FOR SEPARATELY.

## PAVEMENT MARKING HATCHING DETAILS

2

NOT TO SCALE

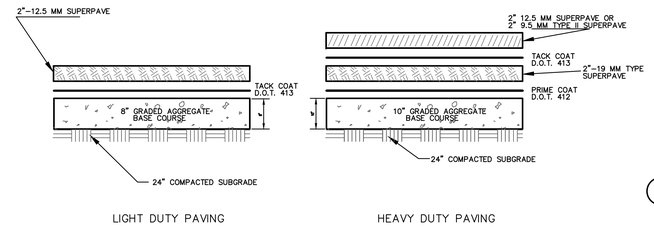


## ASPHALTIC CONCRETE PAVEMENT SECTION

3

NOT TO SCALE

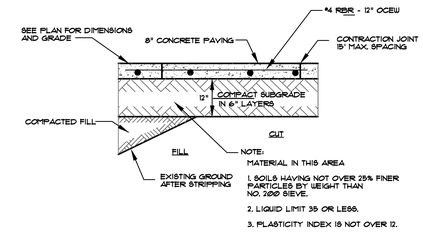


## CONCRETE PAVEMENT SECTION

4

NOT TO SCALE

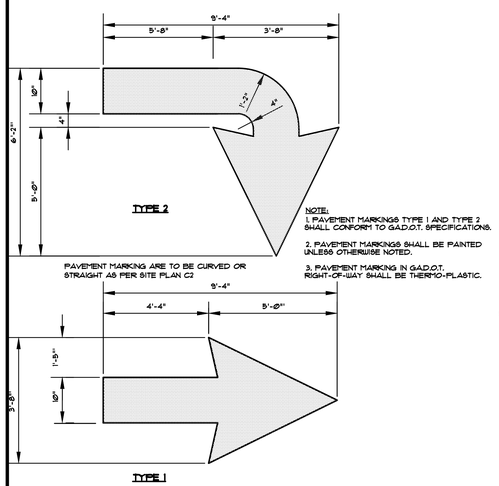


NOTE:
1. PAVEMENT MARKINGS TYPE 1 AND TYPE 2 SHALL CONFORM TO GA.D.O.T. SPECIFICATIONS.
2. PAVEMENT MARKINGS SHALL BE PAINTED UNLESS OTHERWISE NOTED.
3. PAVEMENT MARKING IN GA.D.O.T. RIGHT-OF-WAY SHALL BE THERMO-PLASTIC.

## PAVEMENT MARKINGS

5

NOT TO SCALE — TYPE 1 & TYPE 2

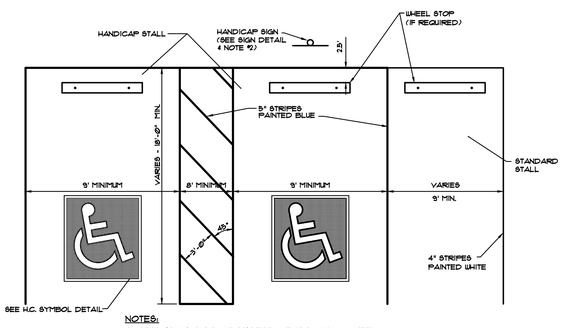


NOTES:
1. WHEEL STOPS NOT TO BE INSTALLED NEXT TO CURB & GUTTER.
2. SIGN LOCATION:
A - SIGN TO BE 3' FROM B.O.C. WHEN ADJACENT TO CURB & GUTTER.
B - AT BACK OF SIDEWALK, SIGN TO BE 1' OFF OF CONCRETE.
C - 3' OFF OF ASPHALT.

## HANDICAP PARKING

6

NOT TO SCALE

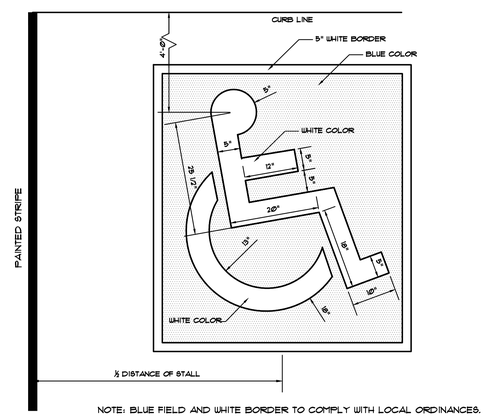


NOTE: BLUE FIELD AND WHITE BORDER TO COMPLY WITH LOCAL ORDINANCES.

## H.C. PARKING SYMBOL

7

NOT TO SCALE — PAINTED


## VAN ACCESSIBLE SIGN

8

NOT TO SCALE

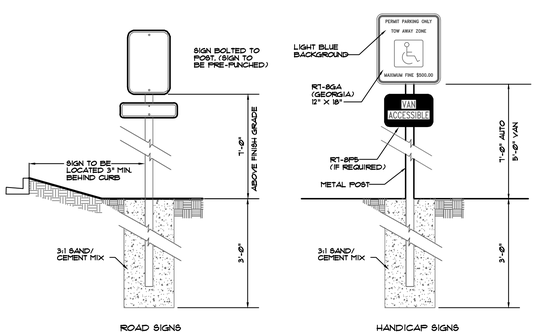


## SIGN POST DETAIL

9

NOT TO SCALE

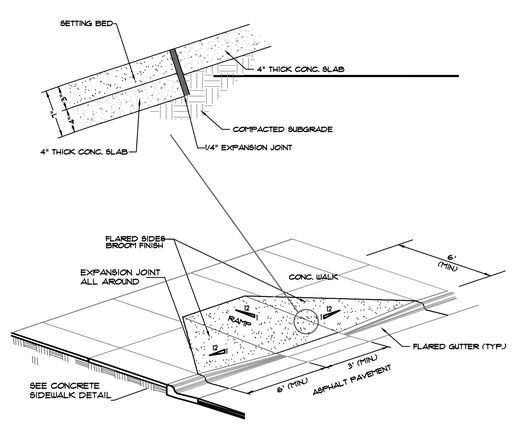


## HANDICAP ACCESS RAMP

10

NOT TO SCALE — CURB & GUTTER

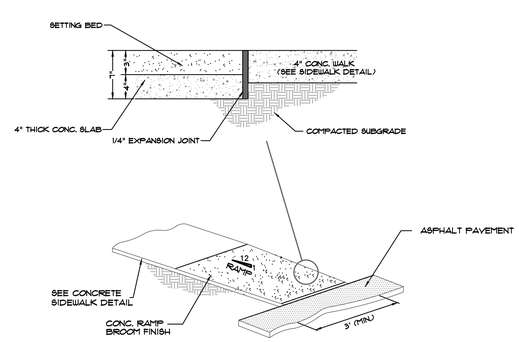


## HANDICAP ACCESS RAMP

11

NOT TO SCALE — DEAD-END / NO CURB

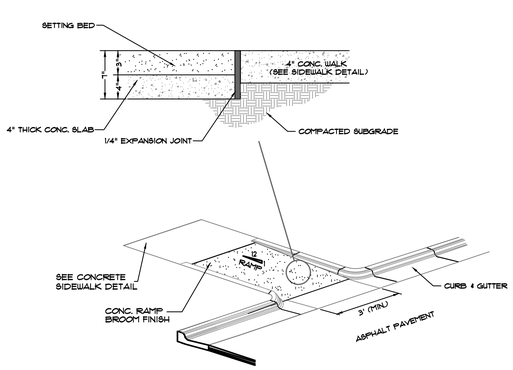


## HANDICAP ACCESS RAMP

12

NOT TO SCALE — DEAD-END / CURBING

EFFINGHAM COUNTY B.O.E. MAINTENANCE FACILITY
GUYTON — EFFINGHAM COUNTY BOARD OF EDUCATION — GEORGIA

JAMES W. BUCKLEY & ASSOCIATES INC. - ARCHITECTS, CIVIL ENGINEERS
SVANNSBORO, ALBANY, ROME, AND SAVANNAH — GEORGIA

CONSTRUCTION DETAILS



GEORGIA REGISTERED No. 36129 PROFESSIONAL ENGINEER WILLIAM D. MARTIN
GSWCC LEVEL II CERT # 0000006308

811 Know what's below. Call before you dig.

ISSUED FOR: BID

GOG — DRAWN BY
WDM — CHECKED BY
12-20-2024 — APPROVED BY
22-065 — PROJECT NO.

SHEET NUMBER
C5.0



J:\Effingham County Schools\22-065 Effingham County School Maintenance Facility\2. CivilDWG\ASCE, 10-23-2024.dwg, 12/19/2024 11:14:20 AM

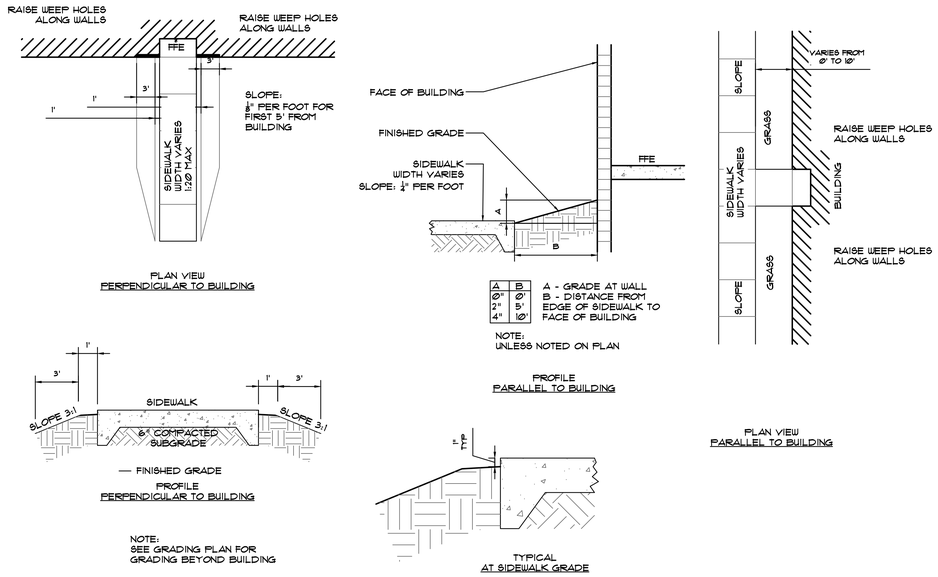


## 1 GRADING FOR SIDEWALKS AT BUILDING

NOT TO SCALE

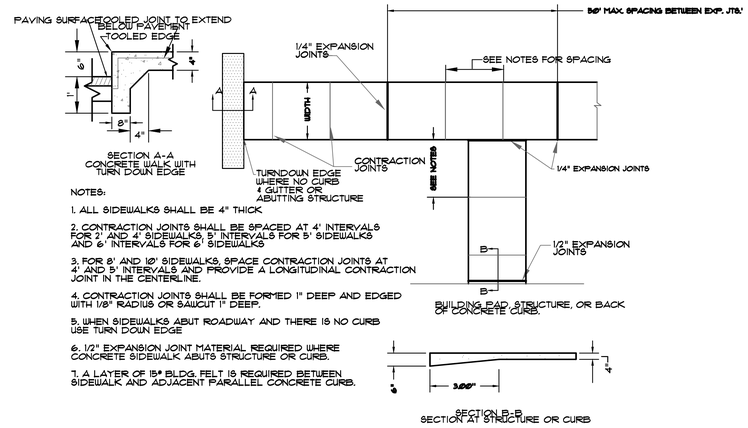


NOTES:

1. ALL SIDEWALKS SHALL BE 4" THICK
2. CONTRACTION JOINTS SHALL BE SPACED AT 4' INTERVALS FOR 2' AND 4' SIDEWALKS, 5' INTERVALS FOR 5' SIDEWALKS AND 6' INTERVALS FOR 6' SIDEWALKS.
3. FOR 8' AND 10' SIDEWALKS, SPACE CONTRACTION JOINTS AT 4' AND 5' INTERVALS AND PROVIDE A LONGITUDINAL CONTRACTION JOINT IN THE CENTERLINE.
4. CONTRACTION JOINTS SHALL BE FORMED 1" DEEP AND EDGED WITH 1/8" RADIUS OR SAWCUT 1" DEEP.
5. WHEN SIDEWALKS ABUT ROADWAY AND THERE IS NO CURB USE TURN DOWN EDGE
6. 1/2" EXPANSION JOINT MATERIAL REQUIRED WHERE CONCRETE SIDEWALK ABUTS STRUCTURE OR CURB.
7. A LAYER OF 15# BLDG. FELT IS REQUIRED BETWEEN SIDEWALK AND ADJACENT PARALLEL CONCRETE CURB.

## 2 CONCRETE SIDEWALK

NOT TO SCALE

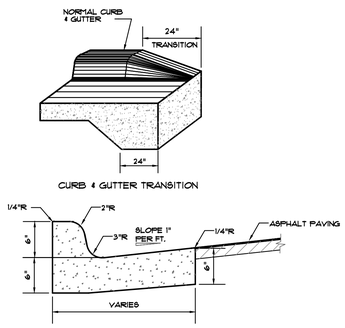


NOTE: USE SPILL SECTION WITH SLOPE 1" PER FOOT OUTWARD FOR INVERTED CROWN & OTHER SPILL SITUATIONS.

## 3 CURB & GUTTER

NOT TO SCALE CONCRETE

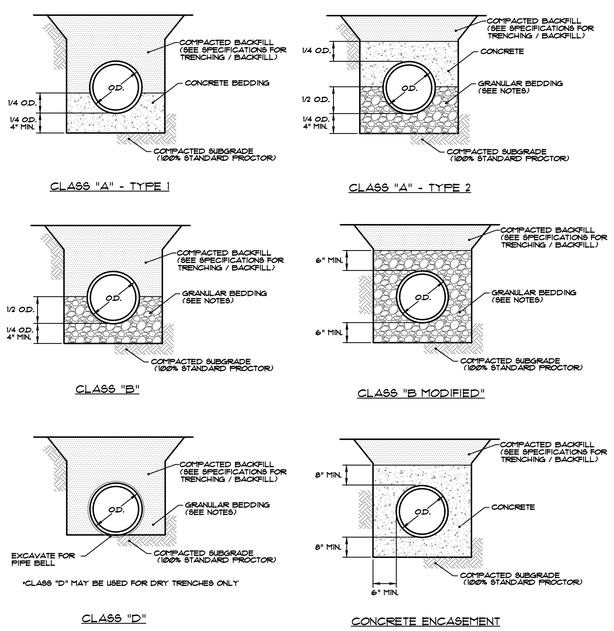


NOTES:

1. SEE SPECIFICATIONS FOR CORRECT APPLICATION OF BEDDING CLASS & BACKFILL MATERIALS
2. ALL GRANULAR BEDDING MATERIALS SHALL BE COMPACTED TO MIN. 95% STANDARD PROCTOR.

## 4 PIPE BEDDING DETAILS

NOT TO SCALE

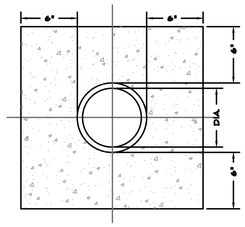


3000 P.S.I. (MIN.) CONCRETE

NOTES:

1. ENCASE SEWER LINE IF WATER LINE CROSSES UNDER SEWER LINE OR IF WATER LINE CROSSES OVER SEWER LINE WITH A VERTICAL CLEARANCE OF 18" OR LESS. ENCASEMENT TO EXTEND 10 FEET EACH WAY OF CROSSING.

## 5 TYPICAL PIPE ENCASEMENT

NOT TO SCALE
DESCRIPTION: LOCATE WHERE AND LENGTH OF CASEMENT ON PLANS

NOTES:

1. CUT & PATCH TO MEET LOCAL REQUIREMENTS HAVING JURISDICTION.
2. ALL LATERAL STREET CUTS MUST BE COVERED WITH STEEL PLATES OF SUFFICIENT THICKNESS TO SPAN THE CUT WITHOUT NOTICEABLE DEFLECTION. THESE PLATES SHALL REMAIN IN PLACE UNTIL THE CONCRETE BASE HAS GAINED SUFFICIENT STRENGTH TO WITHSTAND TRAFFIC LOADS (24 HOUR MINIMUM).
3. FOR LONGITUDINAL CUTS EXCEEDING 150 FT. IN LENGTH, THE CONCRETE IN THE TRENCH SHALL BE BROUGHT FLUSH WITH THE EXISTING PAVEMENT AND THE ENTIRE WIDTH OF ROADWAY SHALL BE RESURFACED WITH A MINIMUM OF 2" OF TYPE "F" ASPHALT TOPPING OR SURFACE COURSE.

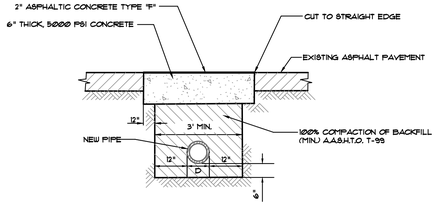


## 6 CUT & PATCH

NOT TO SCALE ASPHALT

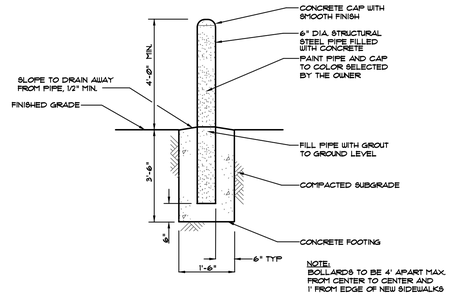


NOTE: BOLLARDS TO BE 4' APART MAX. FROM CENTER TO CENTER AND 1' FROM EDGE OF NEW SIDEWALKS

## 7 BOLLARD

NOT TO SCALE

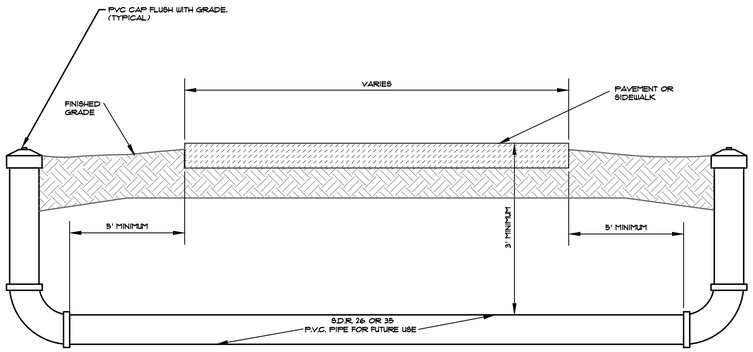


## 8 SLEEVES

NOT TO SCALE

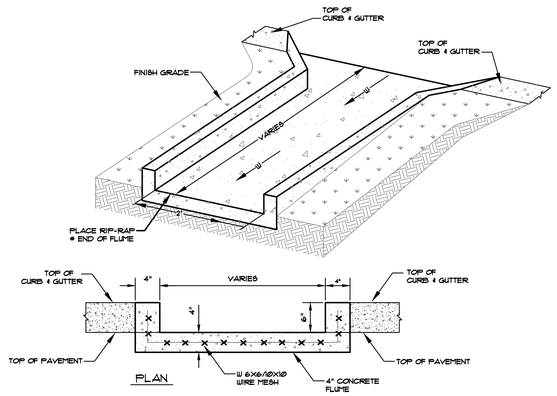


## 9 CONCRETE FLUME

NOT TO SCALE CHANNEL TYPE

EFFINGHAM COUNTY B.O.E. MAINTENANCE FACILITY
GUYTON
EFFINGHAM COUNTY BOARD OF EDUCATION
GEORGIA

JAMES W. BUCKLEY & ASSOCIATES INC. - ARCHITECTS, CIVIL ENGINEERS
SVANNSBORO, ALBANY, ROME, AND SAVANNAH
GEORGIA

CONSTRUCTION DETAILS



GEORGIA REGISTERED No. 36129 PROFESSIONAL ENGINEER WILLIAM D. MARTIN
GSWCC LEVEL II CERT # 0000000308

811 Know what's below. Call before you dig.

ISSUED FOR: BID
GOG — DRAWN BY
CHECKED BY: WDM
APPROVED BY: 12-20-2024
DATE
22-065 — PROJECT NO.
SHEET NUMBER: C5.1

J:\Effingham County Schools\22-065 Effingham County School Maintenance Facility\C - Civil\01\01-CAD\C5.1D-12-20-2024.dwg, 12/19/2024 11:46:44 AM

NOTES:
1. SET TOP OF MANHOLE 3" ABOVE FINISHED GRADE, OR FLUSH WITH PAVEMENT. UNLESS OTHERWISE SHOWN.
2. TOP, RISERS AND BASE SHALL CONFORM TO ASTM SPECIFICATION C-478-LE FOR PRECAST REINFORCED CONCRETE MANHOLE SECTIONS.
3. MANHOLE RING AND COVER SHALL BE SIMILAR TO NEENAH R-1412-A4. LID SHALL HAVE MACHINED BEARING SURFACES AND SHALL BE LETTERED "STORM", "WATER" OR "SANITARY" AS APPROPRIATE.
4. MANHOLE SHALL BE STANDARD 4'-0" INSIDE DIAMETER UNLESS OTHERWISE SHOWN ON PLANS.
5. CORE DRILL MANHOLES FOR CONNECTIONS INTO THE SEWER SYSTEM.

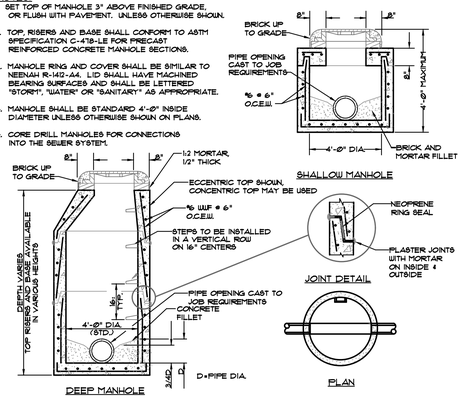


## PRECAST CONCRETE MANHOLE

1 NOT TO SCALE

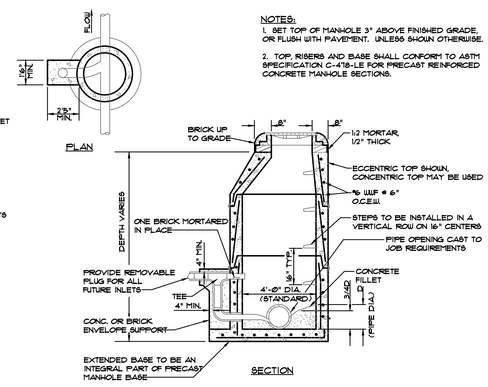


## DROP MANHOLE

2 NOT TO SCALE

NOTE:
MANHOLE RING & COVER SIMILAR TO NEENAH FOUNDRY COMPANY R-1412-A4. TOTAL WEIGHT 300#. TYPE "C" LID TO HAVE MACHINED BEARING SURFACES. LID TO BE LETTERED "STORM", "SANITARY" OR "WATER" AS APPROPRIATE.

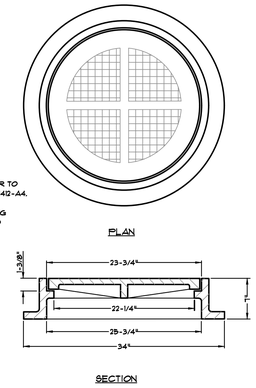


## MANHOLE RING & COVER

3 NOT TO SCALE

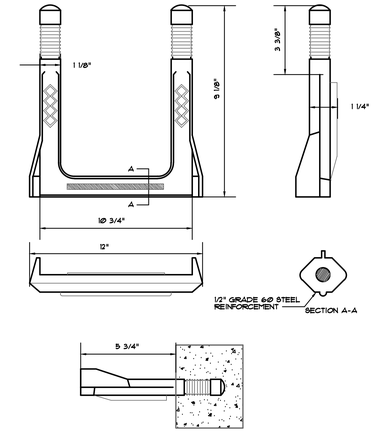


## MANHOLE STEP

4 NOT TO SCALE POLYPROPYLENE

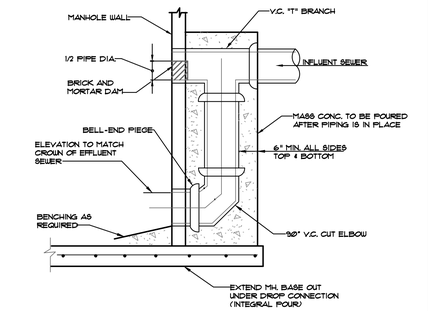


## STANDARD DROP CONNECTION

5 NOT TO SCALE

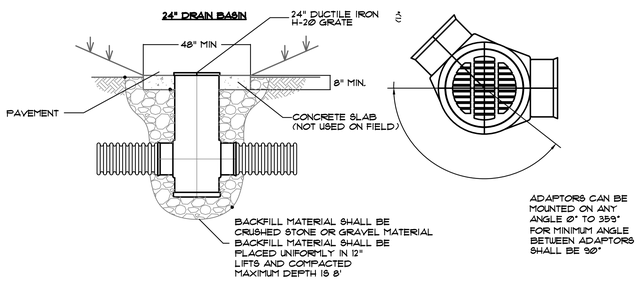


## YARD DRAIN

6 NOT TO SCALE

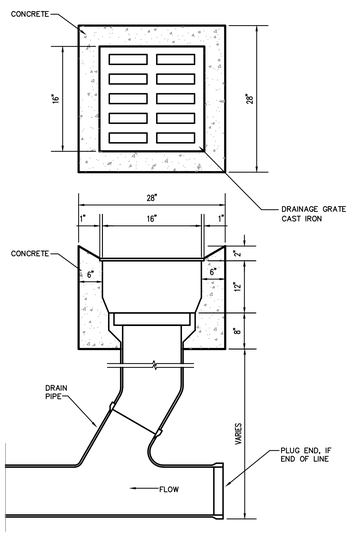


## INLINE DRAIN

7 NOT TO SCALE

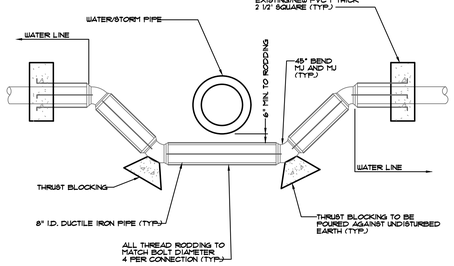


## PIPE INTERSECTION

8 NOT TO SCALE

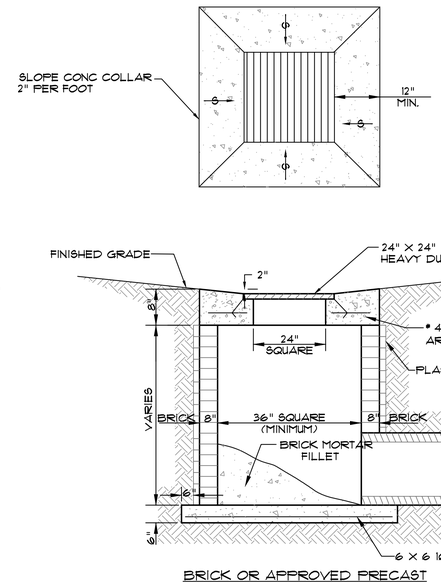


## GRATE INLET

9 NOT TO SCALE

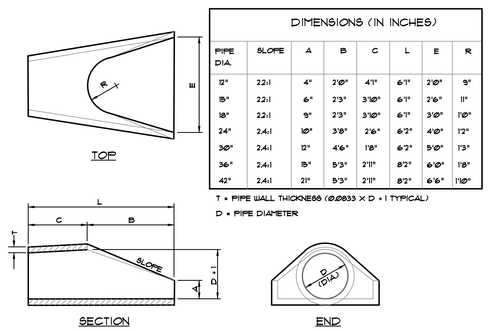


| DIMENSIONS (IN INCHES) | | | | | | | |
|---|---|---|---|---|---|---|---|
| PIPE DIA. | SLOPE | A | B | C | L | E | R |
| 12" | 2.2:1 | 4" | 2'0" | 4'1" | 6'1" | 2'0" | 9" |
| 15" | 2.2:1 | 6" | 2'3" | 3'10" | 6'1" | 2'6" | 11" |
| 18" | 2.2:1 | 9" | 2'3" | 3'10" | 6'1" | 3'0" | 1'0" |
| 24" | 2.4:1 | 10" | 3'8" | 2'6" | 6'2" | 4'0" | 1'2" |
| 30" | 2.4:1 | 12" | 4'6" | 1'8" | 6'2" | 5'0" | 1'3" |
| 36" | 2.4:1 | 15" | 5'3" | 2'11" | 8'2" | 6'0" | 1'8" |
| 42" | 2.4:1 | 21" | 5'3" | 2'11" | 8'2" | 6'6" | 1'10" |

T = PIPE WALL THICKNESS (0.0833 X D + 1 TYPICAL)
D = PIPE DIAMETER

## CONCRETE FLARED END SECTION

10 NOT TO SCALE

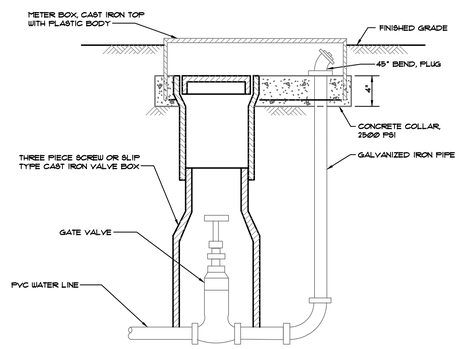


## WATER LINE STUB OUT

11 NOT TO SCALE

EFFINGHAM COUNTY B.O.E. MAINTENANCE FACILITY
GUYTON
EFFINGHAM COUNTY BOARD OF EDUCATION
GEORGIA

JAMES W. BUCKLEY & ASSOCIATES INC. - ARCHITECTS, CIVIL ENGINEERS
SVANNSBORO, ALBANY, ROME, AND SAVANNAH
GEORGIA

CONSTRUCTION DETAILS



GEORGIA REGISTERED No. 36129 PROFESSIONAL ENGINEER WILLIAM D. MARTIN
GSWCC LEVEL II CERT # 0000094308

Know what's below. Call before you dig.

ISSUED FOR: BID

GOG — DRAWN BY
CHECKED BY: WDM
APPROVED BY: 12-20-2024
DATE: 22-065
PROJECT NO.

SHEET NUMBER: C5.2



J:\Effingham County Schools\22-065 Effingham County School Maintenance Facility\2- Cert\WD\SHEAS, 10-30-2024.dwg, 12/18/2024 3:49:30 PM

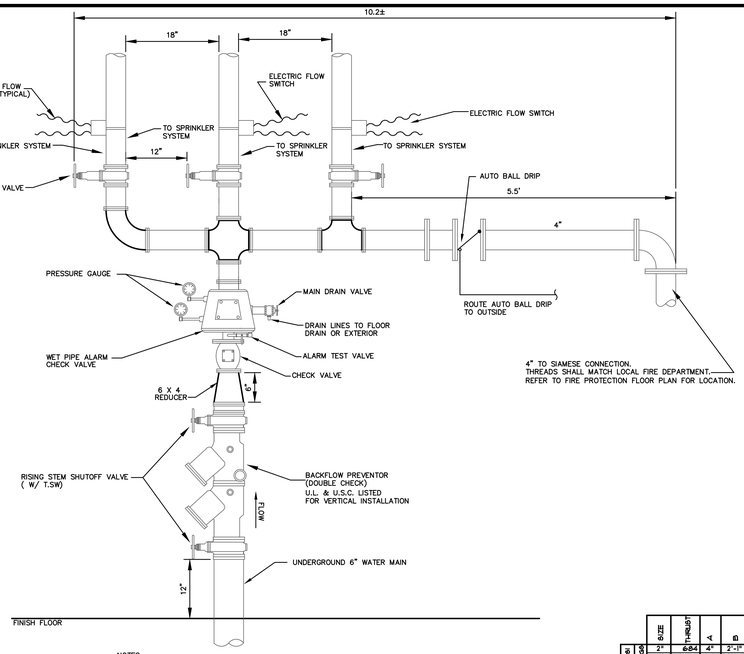


NOTES
1. SEE UTILITY PLAN FOR WHETHER OR NOT BACKFLOW PREVENTOR IS TO BE MOUNTED ON SPRINKLER RISER.
2. BACKFLOW PREVENTOR MAY BE MOUNTED VERTICALLY IF USING AN APPROVED VERTICAL MOUNT BACKFLOW DEVICE.
3. PAINT ALL PIPES RED.
4. SEE ARCHITECTURAL PLAN FOR RISER LOCATION.
5. SPRINKLER RISER AND SIAMESE CONNECTION WORKS SHALL BE COORDINATED WITH THE SPRINKLER CONTRACTOR.
6. SPRINKLER SYSTEM SHALL BE DESIGNED TO WORK WITH EXISTING WATER PRESSURES.
7. SPRINKLER CONTRACTOR SHALL CALCULATE THE NUMBER OF RISERS REQUIRED. IF MORE THAN 3 ARE REQUIRED ARCHITECT SHALL NOTIFIED IMMEDIATELY.

## 1 SPRINKLER RISER

NOT TO SCALE — W/ BACKFLOW PREVENTOR

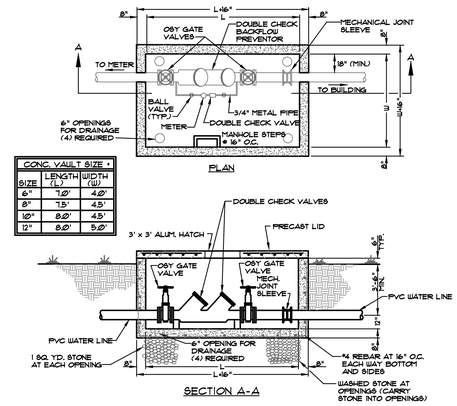


| CONC. VAULT SIZE * | | |
|---|---|---|
| SIZE | LENGTH (L) | WIDTH (W) |
| 6" | 7.0' | 4.0' |
| 8" | 7.5' | 4.5' |
| 10" | 8.0' | 4.5' |
| 12" | 8.0' | 5.0' |

* CONTRACTOR SHALL VERIFY VAULT SIZE BASED ON BACKFLOW PREVENTER MANUFACTURER'S SPECIFICATIONS

## 2 BACKFLOW PREVENTER

NOT TO SCALE — 6"-12" DOUBLE CHECK W/ DETECTOR

NOTES:
1. IN UNPAVED AREAS, SET CONCRETE COLLAR 1" ABOVE GRADE.
2. IN PAVED AREAS, NO CONCRETE COLLAR REQUIRED, SET COVER FLUSH WITH PAVEMENT.
3. NO PRECAST VALVE RINGS ALLOWED.

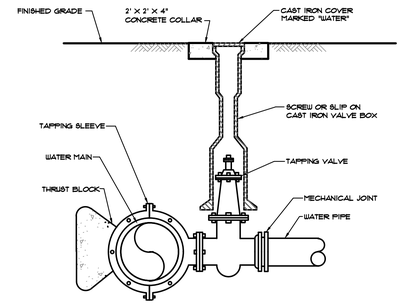


## 3 TAPPING VALVE

NOT TO SCALE

NOTES:
1. IN UNPAVED AREAS, SET CONCRETE COLLAR 1" ABOVE GRADE.
2. IN PAVED AREAS, NO CONCRETE COLLAR REQUIRED, SET COVER FLUSH WITH PAVEMENT.
3. NO PRECAST VALVE RINGS ALLOWED.

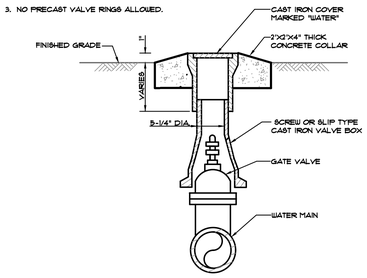


## 4 WATER VALVE BOX

NOT TO SCALE

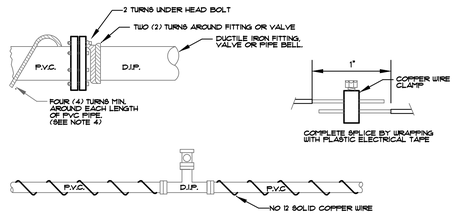


NOTES
1. USE NO 12 AWG SOLID PLASTIC COATED COPPER WIRE.
2. STRIP TWO (2) INCHES OF COATING AND WRAP WIRE TWO (2) TURNS UNDER BOLT ON DUCTILE IRON FITTING (VALVE). NEXT WRAP WIRE TWO (2) TURNS AROUND BELL OF FITTING AND WIND WITH A CONTINUOS WITH AT LEAST FOUR (4) WRAPS PER LENGTH OF PVC PIPE TO NEXT DUCTILE IRON FITTING. TERMINATE AT FITTING IN SIMILAR MANNER AS NOTED ABOVE.
3. ALL SPLICES MUST BE MADE BY USING COPPER WIRE SPLICE "U" BOLT ASSEMBLIES AND THEN WRAPPING WITH ELECTRICAL TAPE.
4. IN LIEU OF WRAPPING TRACER WIRE AROUND PVC PIPE, WIRE MAY BE STRUNG ALONG TOP OF PIPE PROVIDED IT IS TAPED TO THE PIPE EVERY FIVE (5) FEET TO INSURE POSITION DURING BACKFILL.

## 7 TRACER WIRE

NOT TO SCALE — FOR PVC PIPE

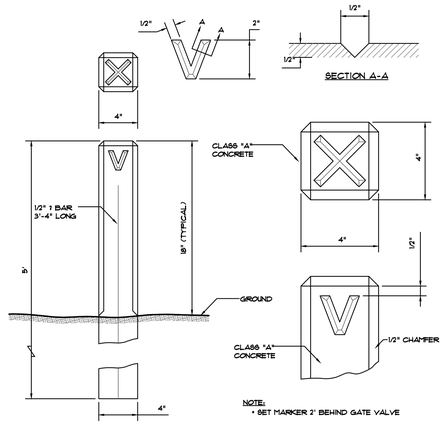


NOTE:
* SET MARKER 2' BEHIND GATE VALVE

## 8 VALVE MARKER

NOT TO SCALE

| | SIZE | THRUST | A | B | U | D |
|---|---|---|---|---|---|---|
| 90 BENDS + TEES + PLUGS — TEST PRESSURE = 150 PSI | 2" | 6484 | 4" | 2'-1" | 1'-9" | 1'-9" |
| | 4" | 1886 | 6" | 2'-6" | 2'-0" | 2'-0" |
| | 6" | 4241 | 8" | 2'-4" | 2'-6" | 2'-6" |
| | 8" | 7539 | 9" | 2'-5" | 3'-0" | 3'-0" |
| | 10" | 11781 | 11" | 2'-6" | 3'-6" | 3'-6" |
| | 12" | 16965 | 12" | 2'-6" | 4'-2" | 4'-2" |
| 45 BENDS — TEST PRESSURE = 150 PSI | 2" | 1868 | 4" | 1'-10" | 1'-9" | 1'-9" |
| | 4" | 7468 | 6" | 2'-10" | 2'-6" | 2'-6" |
| | 6" | 16806 | 8" | 2'-6" | 3'-0" | 3'-0" |
| | 8" | 29867 | 9" | 2'-4" | 3'-6" | 3'-6" |
| | 10" | 46631 | 11" | 2'-6" | 4'-0" | 4'-0" |
| | 12" | 67080 | 12" | 2'-6" | 4'-11" | 4'-11" |
| 22.5 BENDS — TEST PRESSURE = 150 PSI | 2" | 935 | 4" | 2'-0" | 1'-6" | 1'-6" |
| | 4" | 1443 | 6" | 2'-0" | 1'-6" | 1'-6" |
| | 6" | 3250 | 8" | 2'-2" | 2'-0" | 2'-0" |
| | 8" | 5774 | 9" | 2'-4" | 2'-8" | 2'-8" |
| | 10" | 9023 | 11" | 2'-6" | 3'-0" | 3'-0" |
| | 12" | 12992 | 12" | 2'-6" | 3'-8" | 3'-8" |
| 11.25 BENDS — TEST PRESSURE = 150 PSI | 2" | 267 | 4" | 1'-6" | 1'-0" | 1'-0" |
| | 4" | 738 | 6" | 2'-0" | 1'-6" | 1'-6" |
| | 6" | 1656 | 8" | 2'-0" | 1'-6" | 1'-6" |
| | 8" | 2943 | 9" | 2'-2" | 1'-9" | 1'-9" |
| | 10" | 4600 | 11" | 2'-6" | 2'-2" | 2'-2" |
| | 12" | 6623 | 12" | 2'-6" | 2'-8" | 2'-8" |

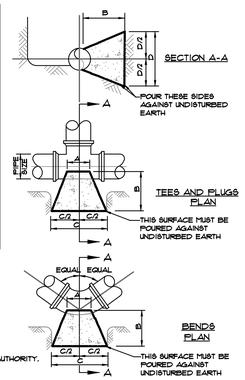


NOTE
1. PLUGS:
   a. PLUG END OF PIPE OR FITTING.
   b. PLACE 20 GA. GALV. SHEET METAL BETWEEN PLUG AND CONCRETE BLOCKING.
2. WHEN MECHANICAL JOINTS ARE USED, PROTECT BOLTS AND THREADS FROM CONCRETE.
3. THRUST BLOCKING TO CONFORM TO LOCAL AUTHORITY.

## 6 CONCRETE THRUST BLOCKS

NOT TO SCALE

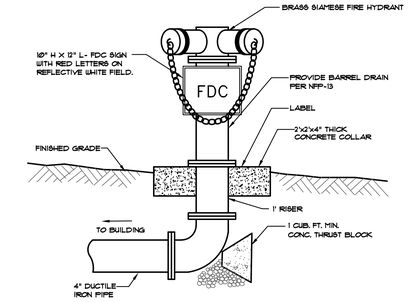


NOTE:
1. SPRINKLER RISER AND SIAMESE CONNECTION WORK SHALL BE COORDINATED WITH THE SPRINKLER CONTRACTOR.

## 5 FIRE DEPARTMENT CONNECTION

NOT TO SCALE — FREESTANDING

NOTES:
1. BASE OF HYDRANT SHALL BE WRAPPED WITH A SUITABLE MATERIAL TO PREVENT BOND BETWEEN HYDRANT AND CONCRETE THRUST BLOCK.
2. LOCATE HYDRANT AS SHOWN IN PLAN VIEW.
3. HYDRANT LATERALS SHALL BE 6".
4. INSTALL 8 C.F. OF 2500 P.S.I. CONCRETE THRUST BLOCK AGAINST UNDISTURBED EARTH DO NOT BLOCK WEEP HOLE.
5. 2" MINIMUM / 6" MAXIMUM EXPOSURE BETWEEN BOTTOM FLANGE OF HYDRANT AND FINISHED GRADE; PROVIDE EXTENSION WHERE NECESSARY.

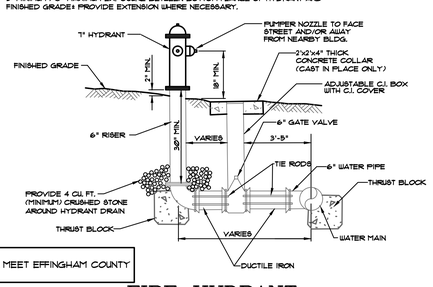


NOTE:
HYDRANT SHALL MEET EFFINGHAM COUNTY SPECIFICATIONS

## 9 FIRE HYDRANT

NOT TO SCALE

NOTES:
1. INDICATOR POSTS SHOULD HAVE METAL PLATE SHOWING WHAT IT CONTROLS SUCH AS BUILDING NAMES OR NUMBERS.
2. POST SHOULD HAVE HANDLE, WHEEL, OR WRENCH ATTACHED.
3. INDICATOR POST CAN BE ADJUSTABLE OR NON-ADJUSTABLE.
4. INDICATOR POSTS ARE TO BE DESIGNED FOR USE WITH UNDERGROUND GATE VALVES.
5. LOCK SHALL BE PROVIDED BY CONCTRACTOR.
6. POST INDICATOR VALVES TO BE PAINTED RED UPON COMPLETION.

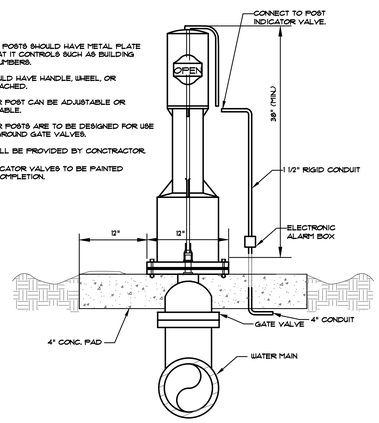


## 10 POST INDICATOR

NOT TO SCALE — FOR FIRE LINE

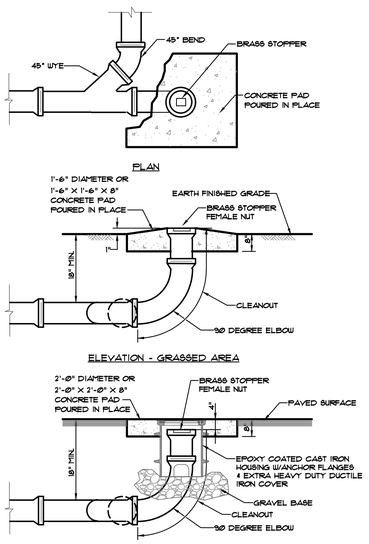


## 11 CLEANOUT

NOT TO SCALE

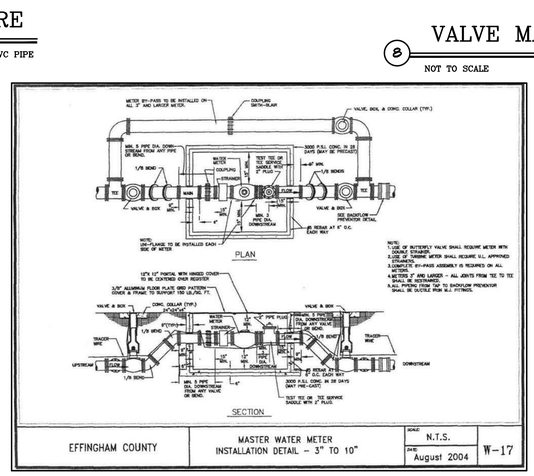


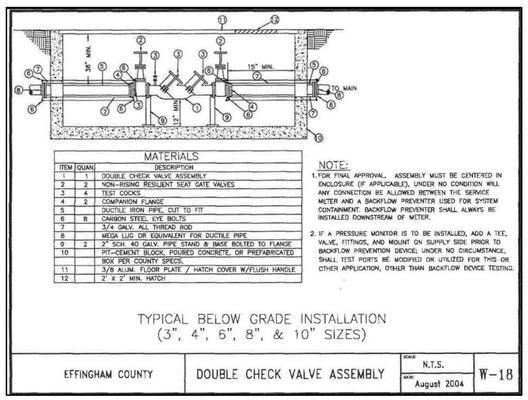


| ITEM | QUAN | DESCRIPTION |
|---|---|---|
| 1 | 1 | DOUBLE CHECK VALVE ASSEMBLY |
| 2 | 2 | NON-RISING RESILIENT SEAT GATE VALVES |
| 3 | 4 | TEST COCKS |
| 4 | 2 | COMPANION FLANGE |
| 5 | | DUCTILE IRON PIPE, CUT TO FIT |
| 6 | 8 | CANNON STEEL EYE BOLTS |
| 7 | | 3/4 GALV. ALL THREAD ROD |
| 8 | | MEGA LUG OR EQUIVALENT FOR DUCTILE PIPE |
| 9 | 2 | 2" SCH. 40 GALV. PIPE STAND & BASE BOLTED TO FLANGE |
| 10 | | PIT-CEMENT BLOCK, POURED CONCRETE, OR PREFABRICATED BOX PER COUNTY SPECS. |
| 11 | | 3/8 ALUM. FLOOR PLATE / HATCH COVER W/FLUSH HANDLE |
| 12 | 2 | 2' X 2' MIN. HATCH |

EFFINGHAM COUNTY B.O.E. MAINTENANCE FACILITY
GUYTON — EFFINGHAM COUNTY BOARD OF EDUCATION — GEORGIA
JAMES W. BUCKLEY & ASSOCIATES INC. - ARCHITECTS, CIVIL ENGINEERS
SVANNSBORO, ALBANY, ROME, AND SAVANNAH — GEORGIA



CONSTRUCTION DETAILS

GEORGIA REGISTERED PROFESSIONAL ENGINEER No. 36129 — WILLIAM D. MARTIN
GSWCC LEVEL II CERT # 0000095438

Know what's below. Call before you dig.

ISSUED FOR: BID
DRAWN BY: GOG
CHECKED BY: WDM
APPROVED BY: 12-20-2024
DATE: 22-065
PROJECT NO.
SHEET NUMBER: C5.3



J:\Effingham County Schools\22-065 Effingham County Schools Maintenance Facility\2- Contract\DETAILS, 10-30-2024.dwg, 12/19/2024 1:46:31 AM


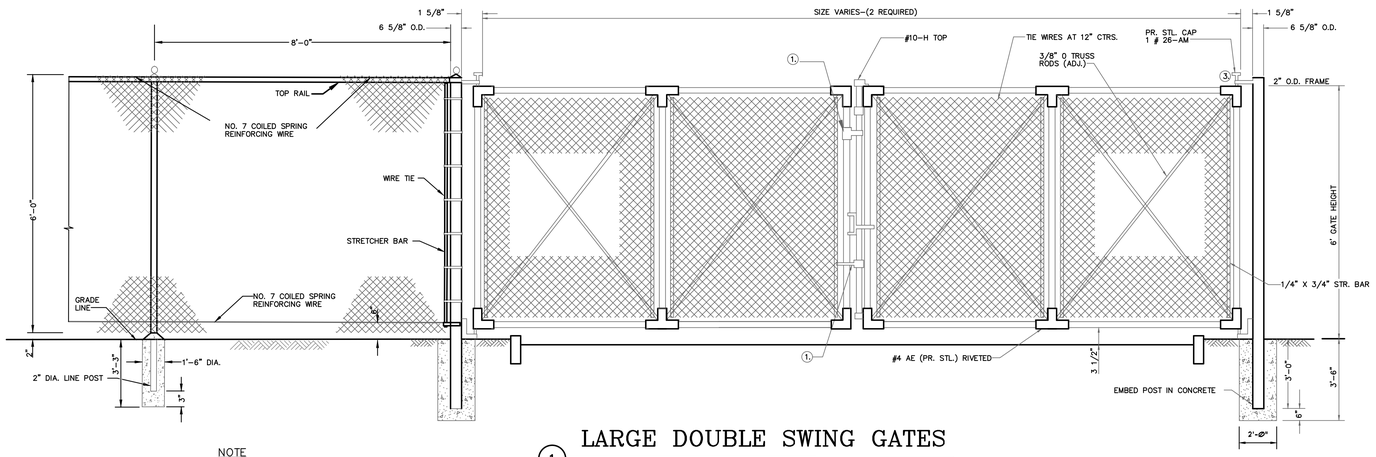


NOTE
FOR GATES 6' OR LARGER TWO GATES REQUIRED TO FIT INSIDE NOTED AREA

## 1 LARGE DOUBLE SWING GATES

NOT TO SCALE

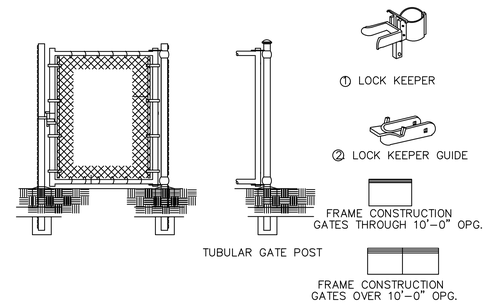


## 2 SINGLE SWING GATE

NOT TO SCALE

NOTES:
1. LOCATION OF GATES SHOWN ON PLANS.
2. GATE 1 SHALL BE USED FOR 30' WIDE ROADS AND GATE 2 SHALL BE USED FOR 24' WIDE ROADS.
3. CONTRACTOR SHALL FIELD VERIFY ROAD DIMENSIONS PRIOR TO CONSTRUCTING GATES.

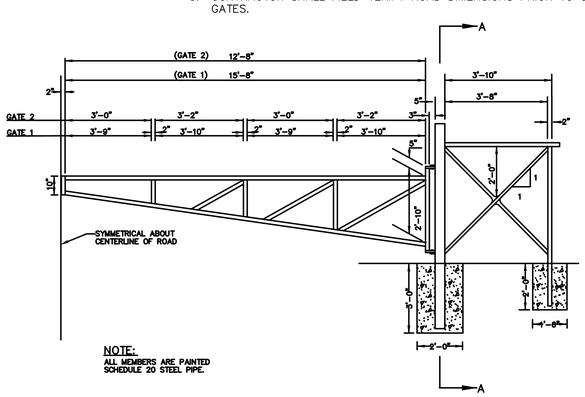


NOTE:
ALL MEMBERS ARE PAINTED SCHEDULE 20 STEEL PIPE.

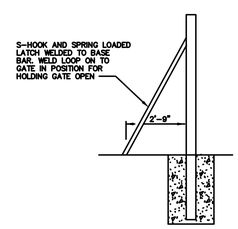


SECURITY GATE SECTION A-A

## 3 SECURITY GATE DETAIL

NOT TO SCALE

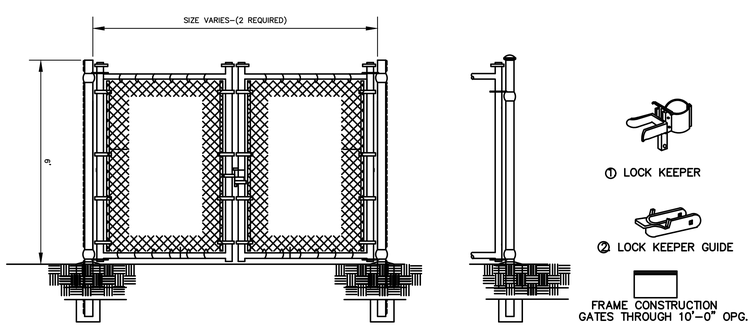


NOTE
FOR GATES SMALLER THAN 6' TWO GATES REQUIRED TO FIT INSIDE NOTED AREA

TUBULAR GATE POST




## 4 SMALL DOUBLE SWING GATE

NOT TO SCALE

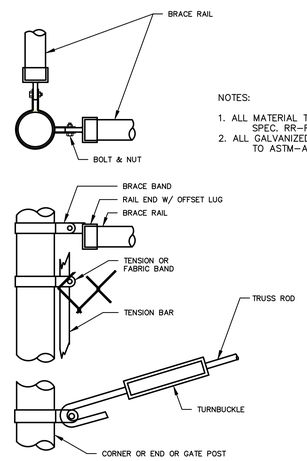


NOTES:
1. ALL MATERIAL TO CONFORM TO FEDERAL SPEC. RR-F-191G (1-25-74).
2. ALL GALVANIZED FITTINGS TO CONFORM TO ASTM-A153.

A
END, CORNER, OR GATE POST
ELEVATION

ROUND TERMINAL POSTS

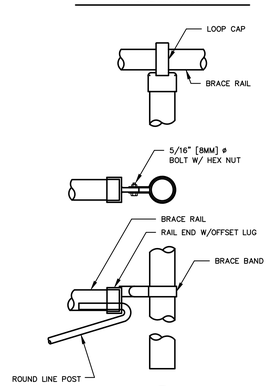


B
LINE POST
ELEVATION

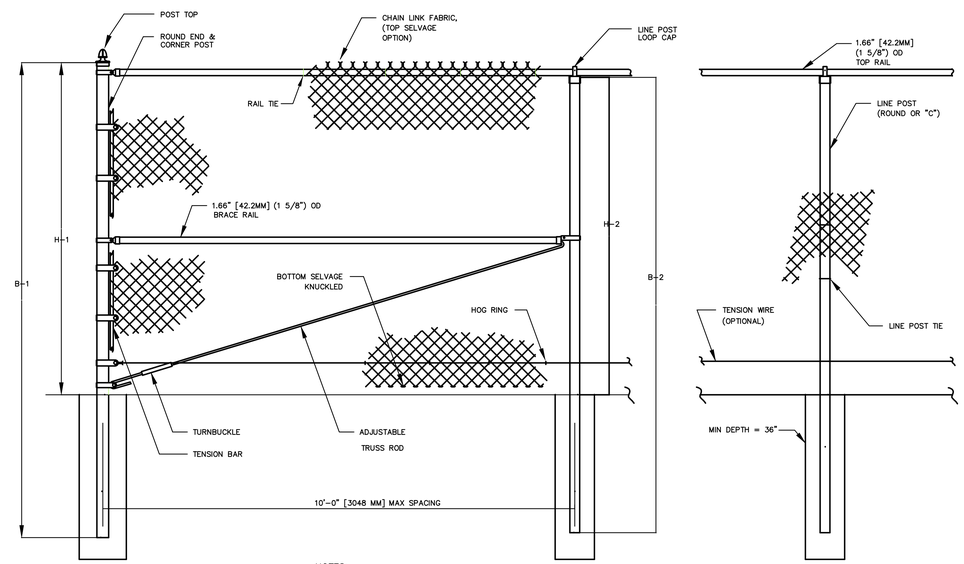


| END & CORNER POST TOP OPTIONS | |
|---|---|
| STANDARD | DOME |

| TOP & BOTTOM FABRIC OPTIONS | |
|---|---|
| TWIST | KNUCKLE |

NOTES:
1. METRIC DIMENSIONS ARE NOMINAL EQUIVALENTS TO U.S. DIMENSIONS.
2. SPECIFICATIONS SHOWN CAN BE CHANGED BY BY THE MANUFACTURER ONLY.
3. FOOTING WIDTH TO BE (4)X POST WIDTH.

| UPRIGHT END & CORNER POSTS | | LINE POSTS | |
|---|---|---|---|
| B-1 BAR LENGTH | H-1 HEIGHT ABOVE GRADE | B-2 BAR LENGTH | H-2 HEIGHT ABOVE GRADE |
| 8'-0" | 4'-0" | 7'-0" | 4'-0" |
| 10'-0" | 6'-0" | 9'-0" | 6'-0" |
| 12'-0" | 8'-0" | 11'-0" | 8'-0" |
| 14'-0" | 10'-0" | 13'-0" | 10'-0" |

## 5 CHAIN LINK FENCE DETAIL

NOT TO SCALE

EFFINGHAM COUNTY B.O.E. MAINTENANCE FACILITY
GUYTON
EFFINGHAM COUNTY BOARD OF EDUCATION
GEORGIA

JAMES W. BUCKLEY & ASSOCIATES INC. - ARCHITECTS, CIVIL ENGINEERS
SVANNSBORO, ALBANY, ROME, AND SAVANNAH
GEORGIA

CONSTRUCTION DETAILS



GEORGIA REGISTERED No. 36129 PROFESSIONAL ENGINEER WILLIAM D. MARTIN
GSWCC LEVEL II CERT # 0000005308

811 Know what's below. Call before you dig.

ISSUED FOR: BID
GOG DRAWN BY
CHECKED BY WDM
APPROVED BY 12-20-2024
DATE
22-065 PROJECT NO.
SHEET NUMBER
C5.4



J:\Effingham County Schools\22-065 Effingham County School Maintenance Facility\2. CivilDWG\BASE, 10-23-2024.dwg, 12/19/2024 11:49:13 AM

## GENERAL SPECIFICATIONS

**NO. REQ'D:** (1)
**CAPACITY:** 350 GALLONS
**TYPE:** HTC, HIGHGUARD, SINGLE WALL
**MATERIAL:** MILD CARBON STEEL
**FLOW RATE:** 35 GPM
**GAUGE: BASED ON 60" MAX BURIAL**

SHELL– 7 GA.
HEADS– 7 GA.

**SURFACE PREP:**
SSPC NO.6 BLAST ALL EXTERIOR SURFACES
SSPC NO.10 BLAST ALL INTERIOR SURFACES

| COATING: | MATERIAL | THICKNESS |
|---|---|---|
| EXTERIOR– | HIGHGUARD | (75 MILS) |
| INTERIOR– | CHEMLINE 4200 PW | (15 MILS) |

**CONSTRUCTION :**
LAP FIT & WELD ALL EXTERIOR SEAMS
**OPERATING PRESSURE :** ATMOSPHERIC

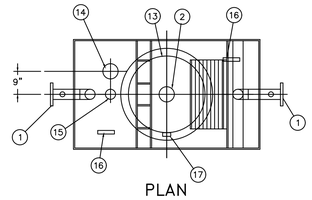


PLAN

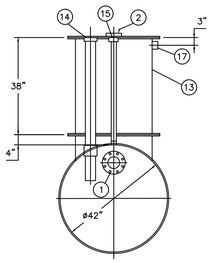


END VIEW

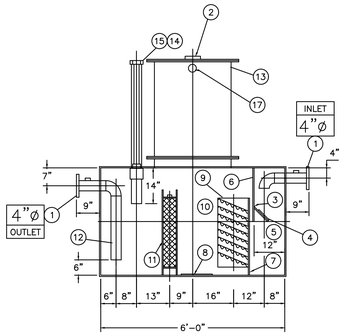


ELEVATION

## OIL/WATER SEPARATOR

1 NOT TO SCALE

## PROVIDED EQUIPMENT

1. 150# R.F.S.O. FLANGE W/ 2" FNPT FOR VENT
2. 4"ø FNPT FOR GAUGE WITH PLUG
3. VELOCITY HEAD DIFFUSION BAFFLE
4. WEAR PLATE
5. SEDIMENT CHAMBER
6. UNDERFLOW BAFFLE (REMOVABLE)
7. SLUDGE BAFFLE
8. STRIKER PLATES
9. PARALLEL CORRUGATED PLATE COALESCER. CORELLA PVC PLATES (3" PLATE SPACING)
10. OIL/WATER SEPARATOR CHAMBER
11. 6" THICK PETROSCREEN COALESCER MATERIAL INSTALLED W/ PULL ROD SHIPPED LOOSE
12. STEEL OUTLET DOWNCOMER
13. 30"ø MANWAY WITH BOLT–ON EXTENSION SHIPPED LOOSE
14. 4"ø FNPT FOR OIL PUMP–OUT WITH INTERNAL PVC PIPE INSTALLED & RISER PIPE SHIPPED LOOSE
15. 2"ø FNPT FOR LEVEL SENSOR WITH RISER PIPE SHIPPED LOOSE
16. LIFTING LUG
17. 2"ø FNPT FOR VENT

## ANCILLARY PROVIDED EQUIPMENT

(2) 30" FIBREFLEX MANWAY GASKETS
(2) SETS OF NUTS/BOLTS/WASHERS FOR 30" MANWAY

## NOTES

1. POLYURETHANE HIGHGUARD TANK IS NOT APPROVED FOR THE STORAGE OF HEATED PRODUCTS
2. ALL VENT PIPING BY INSTALLER
3. 15000 VOLT SPARK TEST PROVIDED AT FACTORY

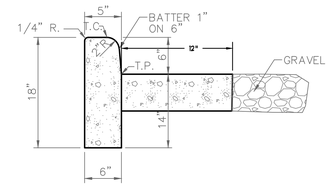


NOTES:

1. CURB TO BE CONSTRUCTED IN 10 FOOT LENGTHS.
2. 1/2" EXPANSION JOINTS SHALL BE PROVIDED AT INTERVALS NOT TO EXCEED 50 FEET, AT THE ENDS AND MID–POINT WHERE THE NEW CURB ABUTS OTHER CONCRETE STRUCTURES.

## HEADER CURB

2 NOT TO SCALE

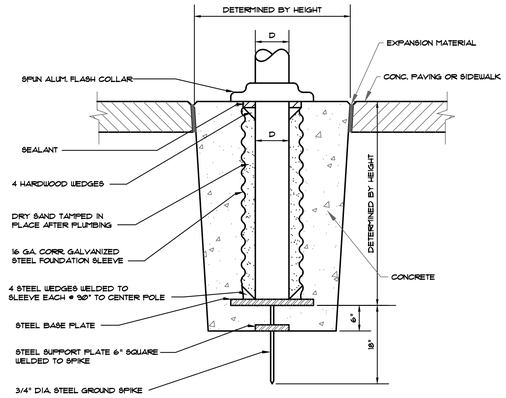


## FLAG POLE DETAIL

3 NOT TO SCALE

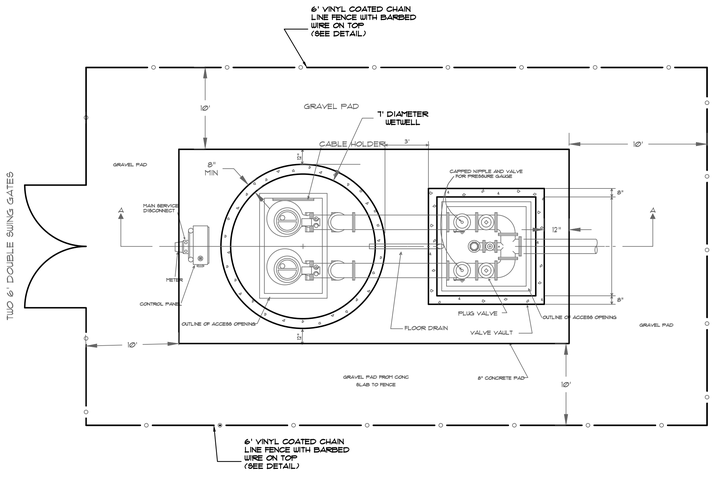


PLAN
NOT TO SCALE

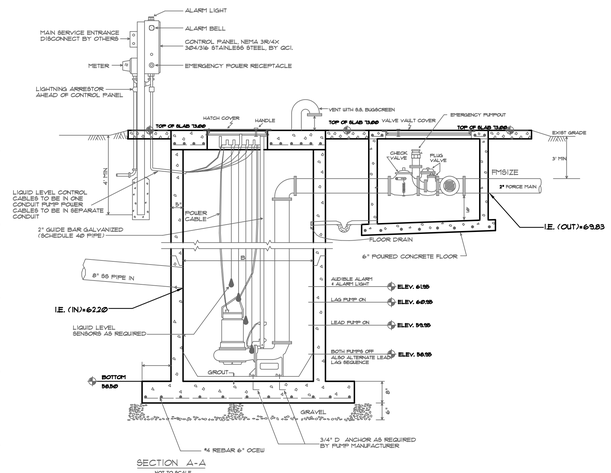


SECTION A–A
NOT TO SCALE

**GENERAL NOTES:**

1. PUMPS SHALL BE LIBERTY, LSG202A-SINGLE STAGE. PUMP IS 2 HP, 1 PHASE, WITH 2" DISCHARGE GRINDER PUMP.
2. WET WELL AND VALVE VAULT SHALL BE COATED INSIDE WITH 2 COATS EPOXY COAL TAR.
3. BASE AND FIRST RISER UNIT TO BE CAST MONOLITHIC.
4. VALVE VAULT SHALL BE SIZED TO PERMIT EASY REMOVAL OF CHECK VALVE
5. VALVE VAULT SHALL HAVE SEALED FLOOR W/DRAIN TO WET WELL
6. ALL LOCATIONS WHERE PIPES ENTER OR LEAVE THE WET WELL OR VALVE VAULT SHALL BE MADE WATERTIGHT WITH WALL SLEEVE OR NON-SHRINK GROUT.
7. PUMP LIFTING DEVICE SHALL BE 1/4" GALVANIZED CHAIN.
8. THERE SHALL BE NO ELECTRICAL JUNCTION BOXES IN WET WELL.
9. CHECK VALVES SHALL BE FLYGT HDL OR OUTSIDE WEIGHT & LEVER.
10. WET WELL & VALVE VAULT COVERS SHALL BE ALUMINUM WITH 304SS HARDWARE AS SUPPLIED AND REQUIRED BY PUMP MANUFACTURER(LOADING 300 PSF).
11. CONTROL PANEL SHALL BE AS MANUFACTURED BY GCI-APOMCAPL. (OR APPROVED EQUAL)
12. PUMPS TO BE INSTALLED IN WETWELL PER MANUFACTURES GUIDELINES
13. ANY PARTS FOR LIFT STATION OR PUMPS NOT SPECIFIED ABOVE SHALL BE NON-CORROSIVE ALUMINUM OR STAINLESS STEEL.

## LIFT STATION DETAIL

4 NOT TO SCALE

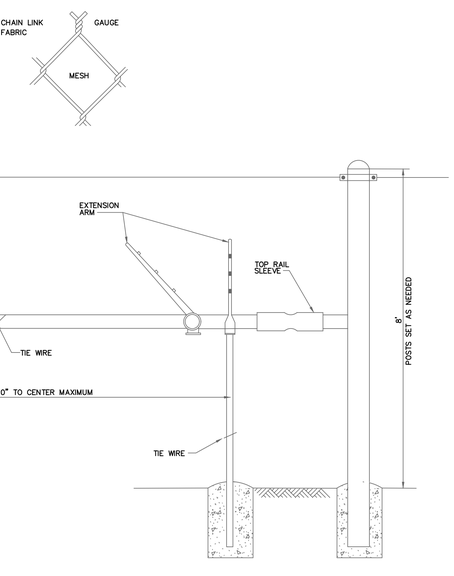


## CUSTODIAN TYPE FENCE

5 NOT TO SCALE

FOR LIFTSTATION ONLY

EFFINGHAM COUNTY B.O.E. MAINTENANCE FACILITY
GUYTON
EFFINGHAM COUNTY BOARD OF EDUCATION
GEORGIA

JAMES W. BUCKLEY & ASSOCIATES INC. - ARCHITECTS, CIVIL ENGINEERS
SVANNSBORO, ALBANY, ROME, AND SAVANNAH
GEORGIA

CONSTRUCTION DETAILS



GEORGIA REGISTERED No. 36129 PROFESSIONAL ENGINEER WILLIAM D. MARTIN
GSWCC LEVEL II CERT # 0000055308

811 Know what's below. Call before you dig.

ISSUED FOR
BID

GOG
DRAWN BY
WDM
CHECKED BY
12-20-2024
APPROVED BY
22-065
DATE
PROJECT NO.

SHEET NUMBER
C5.5



J:\Effingham County Schools\22-065 Effingham County School Maintenance Facility\2. Drawings\CD\22-065.dwg, 12/19/2024 1:50:39 PM

OVERALL LANDSCAPE SCHEDULE

| SYMBOL | BOTANICAL NAME | COMMON NAME | QTY | PLANTING SIZE | COMMENTS |
|---|---|---|---|---|---|
| SMALL TREES AND SHRUBS | | | | | |
| DI | DISTYLIUM 'BAYOU BLISS' | BAYOU BLISS DISTYLIUM | 42 | 3 GAL | |
| HP | HYDRANGEA PANICULATA | LIMELIGHT HYDRANGEA | 5 | 3 GAL | |
| TO | THUJA OCCIDENTALIS | EMERALD GREEN ARBORVITEA | 17 | 3 GAL | FULL TO GROUND |
| GRASSES AND GROUNDCOVER | | | | | |
| LL | LOMANDRA LONGIFOLIA | BREEZE GRASS | 38 | 1 GAL | |
| SOD | COMMON BERMUDA SOD | | | | |
| SEED | BERMUDA SEED | | | | |

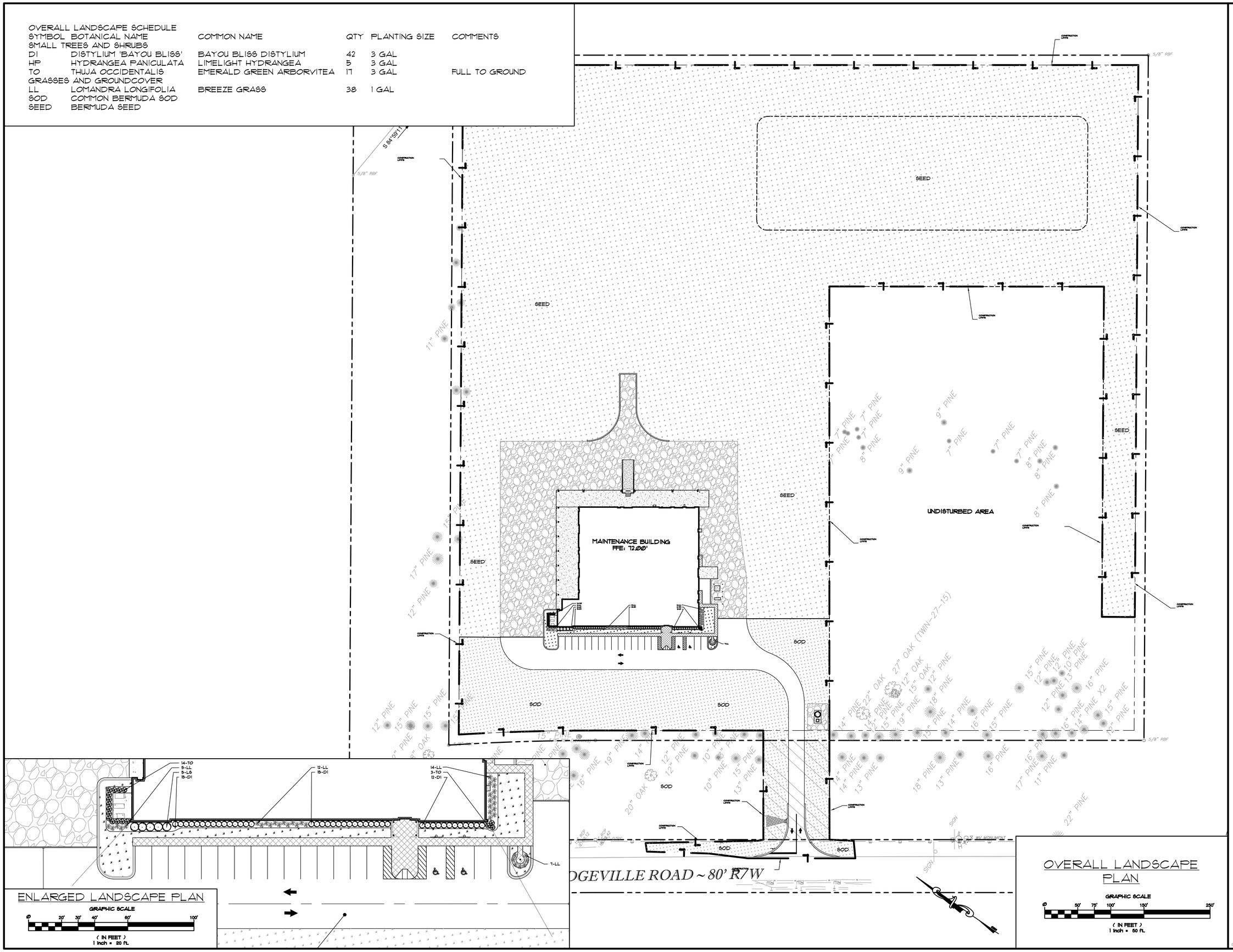


EFFINGHAM COUNTY B.O.E. MAINTENANCE FACILITY
GUYTON EFFINGHAM COUNTY BOARD OF EDUCATION GEORGIA

JAMES W. BUCKLEY & ASSOCIATES INC. - ARCHITECTS, CIVIL ENGINEERS
SYLVANIA/SOPO ALBANY, ROME, AND SAVANNAH GEORGIA

WARNING: Contractors, subcontractors, vendors and suppliers are advised that the contract documents consist of Architect-reproduced printed, bound, and numbered specifications, Architect-reproduced printed, bound and numbered blue or black line prints, addenda, posted addenda, and change orders only. Documents reproduced by parties other than Architect are not contract documents and are prohibited. Documents reproduced by parties other than Architect supersede the provisions of the contract documents. The contractor, subcontractor, vendors, and suppliers solely responsible for verification that information utilized in bidding, development of shop drawings and construction of facility are identical to contract documents.

OVERALL LANDSCAPE PLAN

GEORGIA REGISTERED No. 36109 PROFESSIONAL ENGINEER WILLIAM D. MARTIN

GSWCC LEVEL II
CERT # 0000002308

811 Know what's below. Call before you dig.

ISSUED FOR: BID

JWR
DRAWN BY

CHECKED BY
WDM
APPROVED BY

12-20-2024
DATE

22-065
PROJECT No.

SHEET NUMBER
L1.0

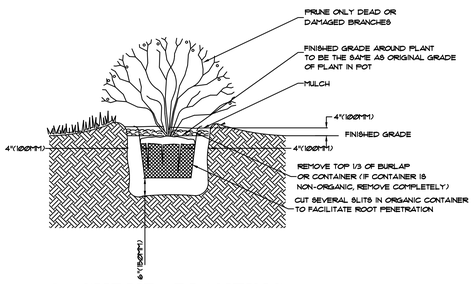


1 SHRUB PLANTING
CONTAINER OR POTTED- NTS

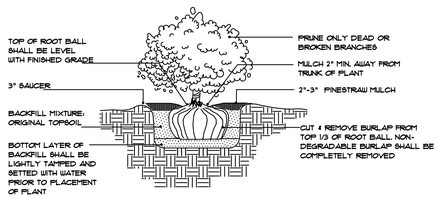


2 SHRUB PLANTING
BALLED AND BURLAP SHRUB- NTS

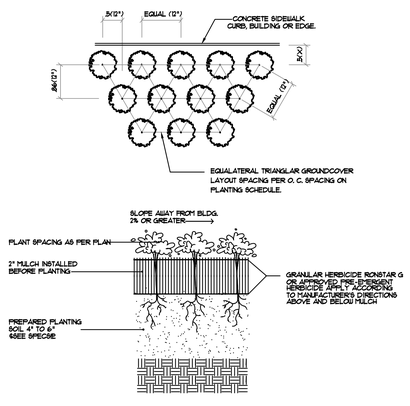


3 GROUNDCOVER PLANTING
BAREROOT OR CONTAINER- NTS

NOTES:
1. IF PLASTIC WRAP IS USED ON B & B TREES AND SHRUBS THEN THE PLASTIC IS TO BE REMOVED ENTIRELY FROM THE ROOT BALL.
2. IF ROOT BALLS ARE TIED WITH NYLON CORD, THEN THE CORD IS TO BE CUT AND REMOVED
3. SEE SPECIFICATIONS FOR MIXING PLANTING SOIL.
4. PRUNE ONLY CROSSOVER LIMBS, BROKEN AND DEAD BRANCHES. DO NOT REMOVE TERMINAL BUDS.
5. IF PLANT IS SHIPPED WITH A WIRE BASKET AROUND ROOT BALL, CUT THE WIRE BASKET AND FOLD DOWN 8"-10" INTO THE PLANTING HOLE.

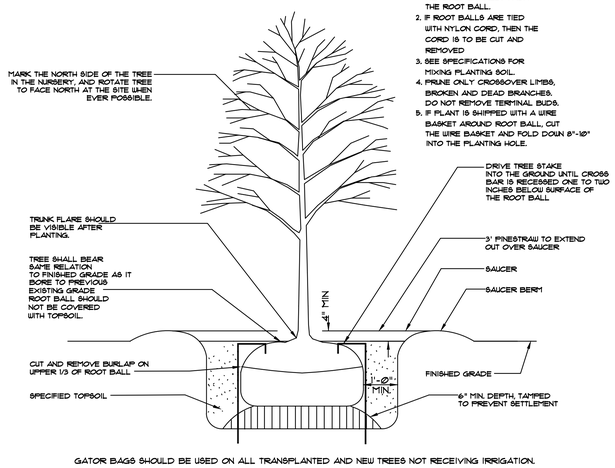


GATOR BAGS SHOULD BE USED ON ALL TRANSPLANTED AND NEW TREES NOT RECEIVING IRRIGATION.

4 TREE PLANTING & STAKING
NOT TO SCALE

## LANDSCAPE AND IRRIGATION NOTES

1. THERE ARE ACTIVE UTILITIES WITHIN THE PROJECT AREA WHERE IRRIGATION AND PLANTING IS TO OCCUR. CONTRACTOR SHALL BE RESPONSIBLE FOR THE LOCATION AND PROTECTION OF UTILITIES DURING CONSTRUCTION.
2. THE CONTRACTOR SHALL SUPPLY ALL PLANT MATERIALS IN QUANTITIES SUFFICIENT TO COMPLETE THE PLANTING SHOWN ON ALL DRAWINGS.
3. ALL DISTURBED AREAS NOT RECEIVING PAVEMENT, ARE TO BE STABILIZED WITH VEGETATIVE MATERIAL SPECIFIED.
4. ALL DAMAGES TO UTILITIES SHALL BE THE RESPONSIBILITY AND COST INCURRED FOR REPAIRS SHALL BE PAID BY THE CONTRACTOR.
5. ALL PROPOSED MATERIAL SHALL BE THAT SPECIFIED. PLANT MATERIAL SUBSTITUTIONS SHALL BE APPROVED PRIOR TO ORDERING. IF ADDITIONAL COST IS INCURRED DUE TO LIMITATIONS OF SPECIES, PLANTING SEASON OR TYPE OF PLANTING THE CONTRACTOR SHALL PROVIDE MATERIALS AT NO ADDITIONAL COST.
6. EXISTING SOD, PLANTINGS OR OTHER LANDSCAPING SHALL BE REPLACED BY THE CONTRACTOR IF DAMAGED DURING CONSTRUCTION. REPLACEMENT MATERIAL SHALL BE OF EQUIVALENT SIZE, QUALITY AND TYPE AS EXISTING.
7. ALL MATERIAL SHALL CONFORM TO THE GUIDELINES ESTABLISHED BY CURRENT AMERICAN STANDARD FOR NURSERY STOCK.
8. NO PLANTING SHALL OCCUR BEFORE GRADING HAS BEEN COMPLETED AND APPROVED.
9. ALL PLANTS SHALL BEAR THE SAME RELATIONSHIP TO FINISHED GRADE AS THE PLANT'S ORIGINAL GRADE BEFORE DIGGING.
10. ALL PLANTS SHALL BE BALLED AND BURLAP OR CONTAINER GROWN AS SPECIFIED. CONTAINER GROWN STOCK WILL NOT BE ACCEPTED IF ROOT BOUND. ALL SYNTHETIC OR PLASTIC WRAPPING SHALL BE REMOVED FROM PLANTS AT TIME OF PLANTING.
11. THE LOCATION AND PLACEMENT OF ALL PLANT MATERIAL SHOULD BE APPROVED BY PROJECT LANDSCAPE ARCHITECT OR EQUAL PRIOR TO PLANTING.
12. ALL PLANTS SHALL BE INSTALLED AS PER DETAILS AND THE CONTRACT SPECS.
13. THE LANDSCAPE CONTRACTOR SHALL PROVIDE FILL AS PER THE CONTRACT SPECS.
14. ALL PLANTS SHALL BE WATERED THOROUGHLY TWICE DURING THE FIRST 24 HOURS AFTER PLANTING. ALL PLANTS SHALL THEN BE WATERED WEEKLY, IF NECESSARY, DURING THE FIRST GROWING SEASON. CONTRACTOR IS RESPONSIBLE FOR WATERING ALL PLANT MATERIAL AS IS NEEDED.
15. CONTRACTOR TO USE TERRA-SORB HYDRO-GEL (OR EQUIVALENT) WHEN PLANTING SOD, TREES, SHRUBS AND GROUNDCOVER. WHERE IRRIGATION IS NOT AVAILABLE. SEE MANUFACTURER'S LABELS FOR APPLICATION INSTRUCTIONS.
16. CONTRACTOR SHALL INSTALL GATOR BAGS ON ALL TRANSPLANTED AND NEW TREES AND SHOULD KEEP BAGS FILLED WITH WATER AND MAINTAINED AS SPECIFIED BY THE CITY ARBORIST.
17. REFER TO THE CONTRACT SPECIFICATIONS FOR ADDITIONAL REQUIREMENTS.

## PLANTINGS AND PLANTING BEDS

1. ALL PLANTS SHALL BE INSPECTED CAREFULLY UPON ARRIVAL TO THE SITE. PLANTS WITH WOUNDS OR BROKEN BRANCHES WILL NOT BE ACCEPTED. ROOT BOUND CONTAINER STOCK WILL NOT BE ACCEPTED.
2. PLANTING HOLES SHALL BE TWICE THE WIDTH OF THE PLANT'S ROOT BALL BUT NOT DEEPER.
3. BURLAP MAY BE LEFT IN PLACE IF THE TOP THIRD IS REMOVED FROM THE ROOT BALL. PLASTICS OR SYNTHETIC MATERIAL AROUND ROOT BALLS SHALL BE REMOVED COMPLETELY BEFORE PLANTING.
4. PLANTING HOLES SHALL BE BACKFILLED WITH THE SAME SOIL THAT WAS REMOVED. AMENDMENTS SUCH AS COMPOST, PEAT AND SAND SHOULD NOT BE USED.
5. TRUNK WRAPPING SHOULD NOT BE USED.
6. STAKING SHOULD BE AVOIDED IF NOT SPECIFIED. UNUSUALLY WINDY SITES OR SPECIMEN TREES MAY REQUIRE STAKING FOR THE FIRST TWO GROWING SEASONS.
7. ONLY DEAD OR DAMAGED BRANCHES SHOULD BE PRUNED OFF OF PLANT MATERIAL AFTER PLANTING.
8. A MINIMUM OF 4" COMPRESSED PINE STRAW MULCH SHALL BE APPLIED TO LANDSCAPE BEDS AFTER PLANTING.
9. TREES LOCATED OUTSIDE OF PLANTING BEDS SHOULD HAVE 6' DIAMETER PINE STRAW MULCH RING AROUND BASE AFTER PLANTING.
10. PLANTINGS SHALL BE INSTALLED IN ACCORDANCE WITH ALL APPLICABLE LANDSCAPE INDUSTRY STANDARDS.
11. PINE STRAW SHALL BE FREE OF CONES, STICKS AND DEBRIS.
12. SEE CONTRACT SPECIFICATIONS FOR ADDITIONAL REQUIREMENTS FOR TREES, PLANTS AND GROUNDCOVER.
13. TREES NOT RECEIVING IRRIGATION SHOULD BE IRRIGATED USING GATOR BAGS.
13. WEED FABRIC SHOULD BE INSTALLED IN ALL BEDS ALONG WITH PINE STRAW.

## GRASSED AREAS

1. IN AREAS WHERE IRRIGATION IS INDICATED. IRRIGATION SHALL BE INSTALLED PRIOR TO INSTALLATION OF GRASSING AND LANDSCAPING.
2. ALL AREAS TO RECEIVE SOD SHALL BE ROLLED, PRIOR TO AND AFTER INSTALLATION OF SOD. AREA SHALL BE ROLLED WITH A MINIMUM OF 200 LB ROLLER. SEEDED AND SPRIGGED AREAS SHALL BE ROLLED AFTER INSTALLATION ONLY
3. WHEAT STRAW MULCH SHALL BE APPLIED AFTER SEEDING OR SPRIGGING GRASS AREAS.
4. CONTRACTOR SHOULD BE RESPONSIBLE FOR FIRST MOWING OF GRASS AFTER IT HAS BECOME ESTABLISHED. SEE SPECIFICATIONS FOR ADDITIONAL MOWING REQUIREMENTS.
5. CONTRACTOR SHOULD BE RESPONSIBLE FOR WATERING SOD UNTIL IT HAS BECOME ESTABLISHED.
6. SEE CONTRACT SPECIFICATIONS FOR ADDITIONAL REQUIREMENTS FOR LAWNS AND GRASSES.

EFFINGHAM COUNTY B.O.E. MAINTENANCE FACILITY
GUYTON EFFINGHAM COUNTY BOARD OF EDUCATION GEORGIA
JAMES W. BUCKLEY & ASSOCIATES INC. - ARCHITECTS, CIVIL ENGINEERS
SYLVANIA/SPRO ALBANY, ROME, AND SAVANNAH GEORGIA



LANDSCAPE NOTES AND DETAILS

GEORGIA REGISTERED No. 36129 PROFESSIONAL ENGINEER WILLIAM D. WHITE
(SWCC LEVEL II CERT.# XXXXXXXXXX)

811 Know what's below. Call before you dig.

ISSUED FOR: BID
DRAWN BY: JWR
CHECKED BY: WDM
APPROVED BY:
DATE: 12-6-2024
PROJECT NO.: 22-065
SHEET NUMBER: L1.1

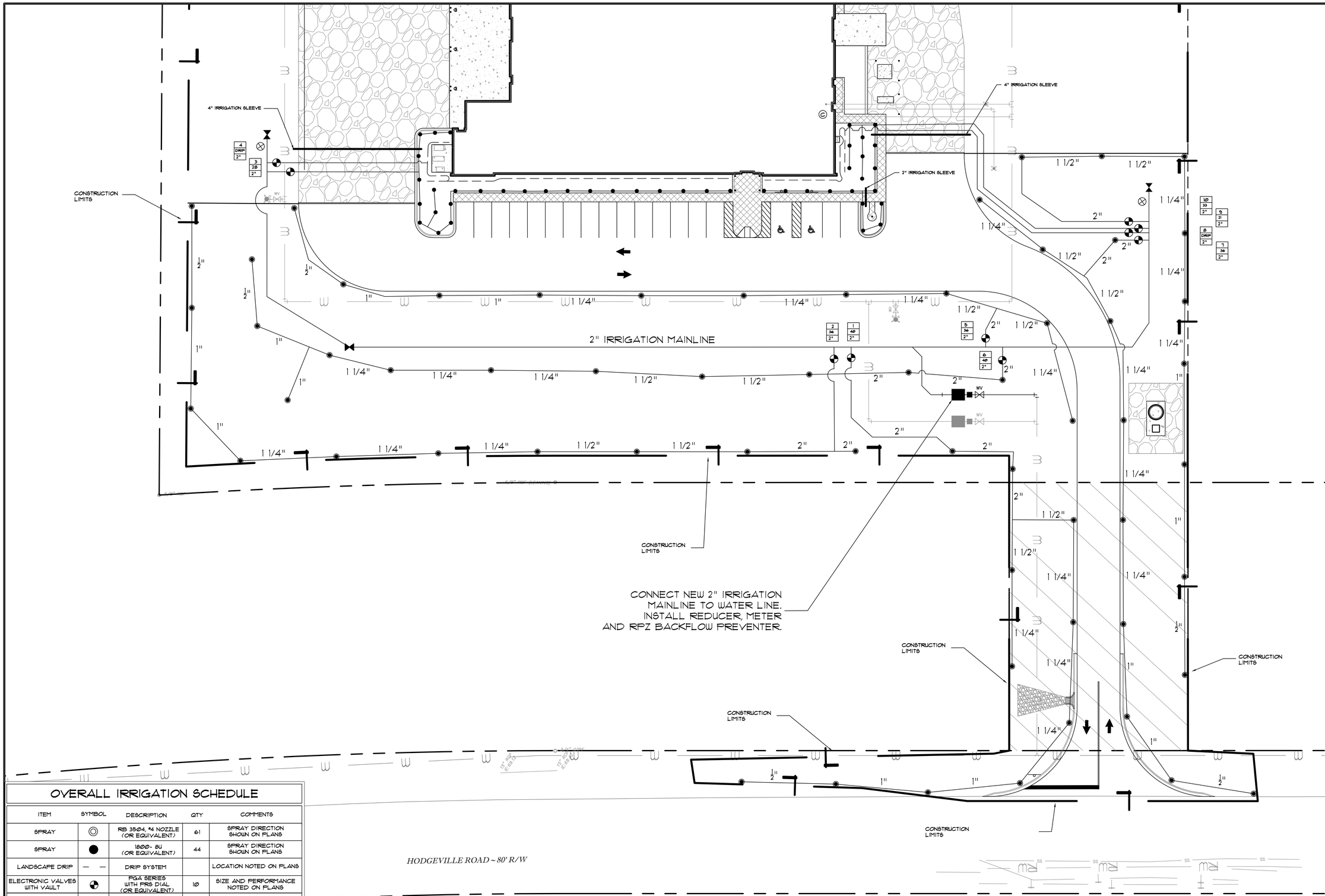


## OVERALL IRRIGATION SCHEDULE

| ITEM | SYMBOL | DESCRIPTION | QTY | COMMENTS |
|---|---|---|---|---|
| SPRAY | ◎ | RB 3504, #4 NOZZLE (OR EQUIVALENT) | 61 | SPRAY DIRECTION SHOWN ON PLANS |
| SPRAY | ● | 1800- 8U (OR EQUIVALENT) | 44 | SPRAY DIRECTION SHOWN ON PLANS |
| LANDSCAPE DRIP | — — | DRIP SYSTEM | | LOCATION NOTED ON PLANS |
| ELECTRONIC VALVES WITH VAULT | ◔ | PGA SERIES WITH PRS DIAL (OR EQUIVALENT) | 10 | SIZE AND PERFORMANCE NOTED ON PLANS |
| ISOLATION VALVE | ⧗ | GATE VALVE | 3 | SIZE AND LOCATION NOTED ON PLANS |
| ELECTRONIC VALVE CONTROL | ⓒ | ESP-LXME 36 ZONE | 1 | LOCATE IN SPRINKLER ROOM |
| QC-QUICK CONNECT | ⊗ | QUICK CONNECT | 2 | LOCATION NOTED ON PLANS |

** PROVIDE IRRIGATION SLEEVES WHERE IRRIGATION LINES CROSS SIDEWALKS, PARKING LOTS AND ROADS.
** QUANTITIES SHOWN ON PLANS OVER RIDE QUANTITIES LISTED IN SCHEDULE

VALVE FLOW (gpm) 23
VALVE NUMBER 5
VALVE SIZE 1-1/2"

| DESIGN PRESSURE | DESIGN FLOW |
|---|---|
| 30-35 PSI | 40 GPM |

## OVERALL IRRIGATION PLAN

GRAPHIC SCALE
0 20' 30' 40' 60' 100'
( IN FEET )
1 inch = 20 ft.

EFFINGHAM COUNTY B.O.E. MAINTENANCE FACILITY
GUYTON EFFINGHAM COUNTY BOARD OF EDUCATION GEORGIA
JAMES W. BUCKLEY & ASSOCIATES INC. - ARCHITECTS, CIVIL ENGINEERS
SYLVANIA/SPRO ALBANY, ROME, AND SAVANNAH GEORGIA

OVERALL IRRIGATION PLAN

WARNING! Contractors, subcontractors, vendors and suppliers to be advised that the contract documents consists of Architect-reproduced printed, bound, and numbered specifications, Architect-reproduced printed, bound and numbered blue or black line prints, addenda, posted addenda, and change orders only. Documents reproduced by parties other than Architect are not part of the contract documents and are subject to revision and change without notice and supersede the provisions of the contract documents. The contractor, subcontractor, vendors, and suppliers solely responsible for verification that information utilized in bidding, development of shop drawings and construction of facility are identical to contract documents.

GEORGIA REGISTERED No. 36129 PROFESSIONAL ENGINEER WILLIAM D. MARTIN
GSWCC LEVEL II CERT # 0000255108

Know what's below. Call before you dig.

ISSUED FOR
BID

JWR
DRAWN BY
WDM
CHECKED BY
WDM
APPROVED BY
12-20-2024
DATE
22-065
PROJECT NO.

SHEET NUMBER
L2.0

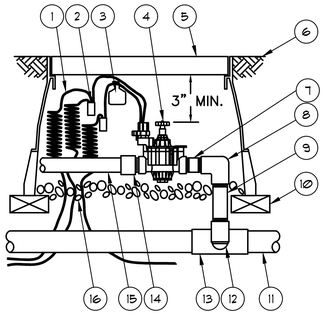


1. 30-INCH LINEAR LENGTH OF WIRE, COILED
2. WATERPROOF CONNECTION: RAIN BIRD SPLICE-1 (1 OF 2)
3. ID TAG: RAIN BIRD VID SERIES
4. REMOTE CONTROL VALVE: RAIN BIRD PGA
5. VALVE BOX WITH COVER: RAIN BIRD VB-STD
6. FINISH GRADE/TOP OF MULCH
7. PVC SCH 80 NIPPLE (CLOSE)
8. PVC SCH 40 ELL
9. PVC SCH 80 NIPPLE (LENGTH AS REQUIRED)
10. BRICK (1 OF 4)
11. PVC MAINLINE PIPE
12. SCH 80 NIPPLE (2-INCH LENGTH, HIDDEN) AND SCH 40 ELL
13. PVC SCH 40 TEE OR ELL
14. PVC SCH 40 MALE ADAPTER
15. PVC LATERAL PIPE
16. 30-INCH MINIMUM DEPTH OF 3/4-INCH WASHED GRAVEL

## 1 PGA CONTROL VALVE (OR EQUIVALENT)

NOT TO SCALE

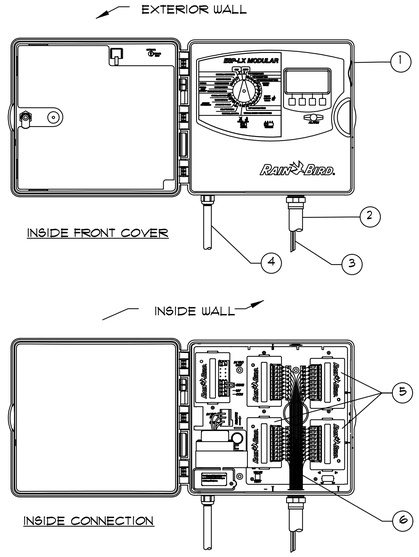


1. MODULAR HYBRID CONTROLLER RAIN BIRD ESP-LX MODULAR EXTERIOR MOUNT.
2. 1.5 INCH METAL CONDUIT AND FITTINGS.
3. WIRES TO REMOTE CONTROL VALVES.
4. 1 INCH METAL CONDUIT TO POWER SUPPLY.
5. 36 STATION CONTROLLER (MINIMUM)
6. WIRES TO REMOTE CONTROL VALVES.

## 2 ESP-LX 36 MODULAR CONTROLLER (OR EQUIVALENT)

NOT TO SCALE

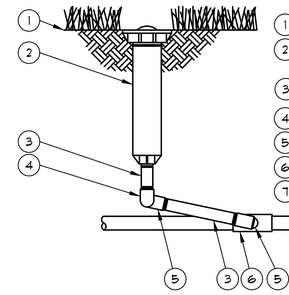

1. FINISH GRADE/TOP OF MULCH
2. POP-UP SPRAY SPRINKLER: RAIN BIRD 1804 WITH RAIN BIRD ROTARY NOZZLE
3. PVC SCH 80 NIPPLE (LENGTH AS REQUIRED)
4. PVC SCH 40 ELL
5. PVC SCH 40 STREET ELL
6. PVC SCH 40 TEE OR ELL
7. PVC LATERAL PIPE

## 3 1800 POP-UP SPRAY, ROTARY NOZZLE (OR EQUIVALENT)

NOT TO SCALE

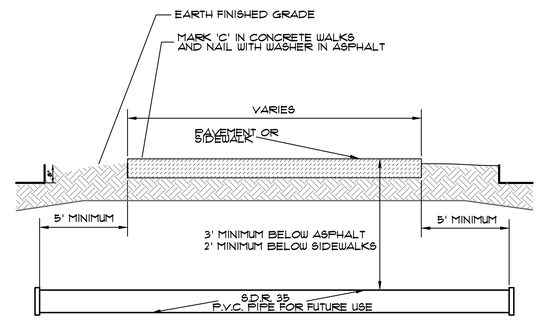


## 4 SLEEVE

NOT TO SCALE

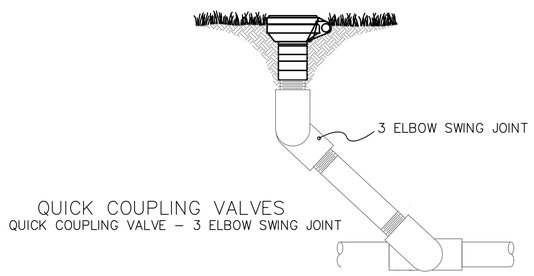


## 6 QUICK COUPLING VALVES

NOT TO SCALE

NOTES:
1. IN UNPAVED AREAS, SET CONCRETE COLLAR 1" ABOVE GRADE.
2. IN PAVED AREAS, NO CONCRETE COLLAR REQUIRED, SET COVER FLUSH WITH PAVEMENT.
3. NO PRECAST VALVE RINGS ALLOWED.

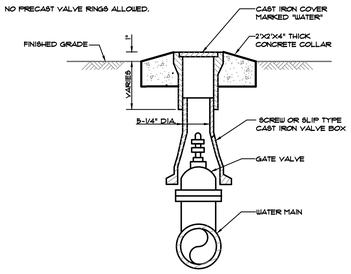


## 6 WATER VALVE BOX

NOT TO SCALE

NOTES:
1. BOTTOM OF REDUCED PRESSURE DIVICE SHALL BE A MIN. OF 12" ABOVE FINISHED GRADE ELEVATION.
2. REDUCED PRESSURE DEVICE - WATTS SERIES 909 OR EQUAL.
3. ANTISIPHON VACUM BREAKER - WATTS No. 288A OR EQUAL
4. WALLS MAY BE CONCRETE BLOCK, POURED, OR PRECAST CONCRETE.
5. COVER SHALL HAVE MINIMUM LOAD RATING OF 300 P.S.F.

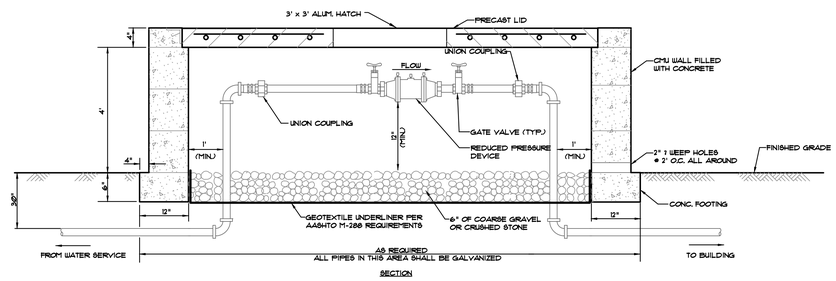


## 7 BACKFLOW PREVENTER

NOT TO SCALE REDUCED PRESSURE

IRRIGATION NOTES:

1. CONTRACTOR TO INSTALL CONDUITS FOR ELECTRICAL WIRES AND WATER LINES PRIOR TO SIDEWALKS BEING INSTALLED.
2. MINOR ADJUSTMENTS CAN BE MADE TO SPRINKLER LOCATION TO IMPROVE COVERAGE AREAS.
3. CONTRACTOR TO PROVIDE VARIOUS NOZZLES TO MINIMIZE WATER ON SIDEWALKS AND PAVED AREAS.
4. CONTRACTOR TO COORDINATE IRRIGATION CONNECTION WITH LOCAL WATER AUTHORITY PRIOR TO INSTALLATION.
5. ACTIVE UTILITIES ARE WITHIN THE PROJECT AREA WHERE IRRIGATION AND PLANTING IS TO OCCUR. CONTRACTOR SHALL BE RESPONSIBLE FOR THE LOCATION AND PROTECTION OF UTILITIES DURING CONSTRUCTION
6 ALL DISTURBED AREAS NOT RECEIVING PAVEMENT SHALL BE STABILIZED WITH VEGETATIVE MATERIAL SPECIFIED.
7. ALL DAMAGES TO EXISTING STRUCTURES, PLANT MATERIAL OR UTILITIES SHALL BE CONTRACTOR'S RESPONSIBILITY.
8. ALL COMPONENTS SHALL BE INSTALLED AS PER MANUFACTURERS RECOMMENDATIONS
9. MAINLINE DEPTH SHALL BE NO LESS THAN 36"
10. LATERAL DEPTH SHALL BE NO LESS THAN 24"
11. ELECTRIC CONTROL VALVES SHALL BE COVERED WITH 12" VALVE BOX
12 VALVES/QCV'S LOCATIONS SHALL BE OUT OF HIGH TRAFFIC AREAS
14. WIRE SPLICE CONNECTIONS SHALL BE WATERPROOF
15. QCV SHALL BE LOCATED IN 10" VALVE BOX
16. ALL SLEEVES SHALL BE 2X DIAMETER SIZE OF PIPE THAT RUNS THROUGH THEM
17. CONTRACTOR SHALL INSTALL ALL COMPONENTS AS PER LOCAL, STATE, FEDERAL CODES
18. THERE ARE ACTIVE UTILITIES WITHIN THE CONSTRUCTION LIMITS. CONTRACTOR IS RESPONSIBLE FOR THE LOCATION AND PROTECTION OF UTILITIES DURING CONSTRUCTION.
19. SEE SPECIFICATIONS FOR ACCEPTABLE LIST OF MANUFACTURERS.
20. ALL LINES ON FOOTBALL AND PRACTICE FIELD SHOULD BE INSTALLED NO LESS THAN 24" BELOW FINISH GRADE. MAINLINE SHOULD BE INSTALLED 36" BELOW FINISH GRADE.
21. COORDINATE ROAD CROSSINGS AND SIDEWALK CROSSINGS WITH CONTRACTOR.
22. TREES NOT RECEIVING IRRIGATION SHOULD BE IRRIGATED USING GATOR BAGS.

EFFINGHAM COUNTY B.O.E. MAINTENANCE FACILITY
GUYTON
EFFINGHAM COUNTY BOARD OF EDUCATION
GEORGIA

JAMES W. BUCKLEY & ASSOCIATES INC. - ARCHITECTS, CIVIL ENGINEERS
SVANNSBORO, ALBANY, ROME, AND SAVANNAH
GEORGIA



IRRIGATION NOTES AND DETAILS

GEORGIA REGISTERED No. 36129 PROFESSIONAL ENGINEER WILLIAM D. MARTIN
GSWCC LEVEL II CERT # 0000000588

811 Know what's below. Call before you dig.

ISSUED FOR: BID
DRAWN BY: JWR
CHECKED BY: WDM
APPROVED BY: 12-20-2024
DATE:
PROJECT NO: 22-065
SHEET NUMBER: L2.1

**NARRATIVE:**

1. APPLICANT INFORMATION:

EFFINGHAM COUNTY BOARD OF EDUCATION
405 NORTH ASH STREET
SPRINGFIELD, GEORGIA 31329
24 HOUR CONTACT: RON WOMACK
PH #: (912) 656-5953
EMAIL: RWOMACK@EFFINGHAM.GA.US

**2. PROJECT DESCRIPTION:** THE PROJECT SITE IS LOCATED ON THE PROPERTY OF THE EFFINGHAM COUNTY BOARD OF EDUCATION AT HODGEVILLE ROAD, CITY OF GUYTON, EFFINGHAM COUNTY, GEORGIA. SITE IS USED FOR THE CONSTRUCTION OF NEW MAINTENANCE BUILDING FACILITY FOR EFFINGHAM COUNTY BOARD OF EDUCATION.

**3. PROJECT AREA:**
TOTAL AREA FOR THIS PROPERTY IS **24.997** ACRES.
TOTAL DISTURBED AREA FOR THIS PROJECT IS **11.60** ACRES.

**4. PROJECT LOCATION:**
THIS PROPERTY IS LOCATED ON LANDS OF EFFINGHAM COUNTY BOARD OF EDUCATION, CITY OF GUYTON, EFFINGHAM COUNTY, GEORGIA. THE PROPERTY IS AN EMPTY LOT WITH TREES AND BUSHES ALONG HODGEVILLE ROAD.

**5. SITE CONDITIONS:**
THE SITE IS CURRENTLY AN EMPTY WOODED LOT.

**6. SOILS INFORMATION:**
LnA: LEON SAND (0 TO 2 PERCENT SLOPES).

**7. DATE OF CONSTRUCTION:**
APPROXIMATE START OF CONSTRUCTION IS MARCH 1, 2025.
STABILIZATION SHOULD BE ACCOMPLISHED BEFORE MAY 1, 2026.
(SEE SCHEDULE FOR ADDITIONAL INFORMATION).

**8. CRITICAL AREAS:**
WETLAND AREAS **ARE NOT** LOCATED ON THE SITE AND WILL REMAIN UNDISTURBED.

**9. DISPOSAL OF DEBRIS:**
NO MATERIALS ARE TO BE BURIED ON-SITE. CONSTRUCTION MATERIALS MAY BE BURNED AND/OR TAKEN TO A STATE APPROVED LAND FILL. BURNING IS ALLOWED ONLY IF THE PROPER PERMIT IS OBTAINED FROM THE LOCAL AUTHORITY.

**10. STORM WATER MANAGEMENT:**
ON SITE POND WILL BE CREATED TO HELP PREVENT SEDIMENTS FROM LEAVING SITE. ALL AREAS WILL HAVE TYPE "S" AND "NS" SILT FENCE TO PREVENT SEDIMENT ESCAPE FROM SITE. AT THE COMPLETION OF THE PROJECT THE SITE WILL BE SURFACE ROUGHENED AND GRASSED TO HELP TREAT POLLUTANTS FROM ENTERING THE STORM WATER.

**11. FLOOD HAZARD:**
THIS PARCEL IS IN MINIMAL FLOOD HAZARD AREA ACCORDING TO F.I.R.M. COMMUNITY NUMBER 13103C0360E, DATED MARCH. 16, 2015.

**12. STATE WATERS:**
THERE ARE NO STATE WATERS PRESENT ON THIS SITE WHICH REQUIRE A (25) FOOT MINIMUM VEGETATIVE BUFFER AND A (50) FOOT IMPERVIOUS SETBACK. RECEIVING WATERS IS A TRIBUTARY OF DASHER CREEK.

**13. WETLANDS:**
THERE ARE NO WETLANDS LOCATED ON SITE. WETLANDS WILL REMAIN UNDISTURBED.

14. ALL CUT AND FILL SLOPES MUST BE SURFACED ROUGHENED AND VEGETATED WITHIN SEVEN (7) DAYS OF THEIR CONSTRUCTION.

15. ALL FILL SLOPES WILL HAVE SILT FENCE AT TOE OF SLOPE.

16. A 50 FOOT UNDISTURBED VEGETATIVE BUFFER ADJACENT TO ALL RUNNING STREAMS AND CREEKS WILL BE LEFT AND MAINTAINED.

17. INSTALLATION:
**THE ESCAPE OF SEDIMENT FROM THE SITE SHALL BE PREVENTED BY THE INSTALLATION OF EROSION AND SEDIMENTATION CONTROL MEASURES AND PRACTICES PRIOR TO LAND-DISTURBING ACTIVITIES.**

18. MAINTENANCE:
**EROSION CONTROL MEASURES SHALL BE MAINTAINED AT ALL TIMES. IF FULL IMPLEMENTATION OF THE APPROVED PLAN DOES NOT PROVIDE FOR EFFECTIVE EROSION CONTROL, ADDITIONAL EROSION AND SEDIMENT CONTROL MEASURES SHALL BE IMPLEMENTED TO CONTROL OR TREAT THE SEDIMENT SOURCE.**

19. EROSION AND SEDIMENTATION CONTROL MEASURES WILL BE IMPLEMENTED BY THE CONTRACTOR TO RETAIN SEDIMENT WITHIN THE BOUNDARIES OF THE PROJECT SITE AND PREVENT EROSION OF SOILS DURING CONSTRUCTION.

20. MAINTENANCE OF ALL SOIL EROSION AND SEDIMENT CONTROL PRACTICES, WHETHER TEMPORARY OR PERMANENT, SHALL AT ALL TIMES BE THE RESPONSIBILITY OF THE CONTRACTOR. CONTRACTOR IS RESPONSIBLE FOR THE MAINTENANCE OF ALL SOIL EROSION CONTROL MEASURES IMPLEMENTED UNDER CURRENT AND PREVIOUS CONTRACTS.

21. ALL INLETS SHALL BE EQUIPPED WITH Sd2 INLET PROTECTION END SECTIONS SHALL BE EQUIPPED WITH St OUTLET PROTECTION (RIPRAP)

**22. ANY DISTURBED AREA LEFT EXPOSED FOR A PERIOD GREATER THAN 14 DAYS SHALL BE STABILIZED WITH MULCH AND/OR TEMPORARY SEEDING.**

23. ALL SLOPES CONSTRUCTED WITH AN INCLINE OF 3:1 OR GREATER SHALL BE PROTECTED USING AN EROSION CONTROL MAT.

24. MAXIMUM CUT AND FILL SLOPES ARE (2) FEET HORIZONTAL TO (1) FOOT VERTICAL.

25. STORM WATER DRAINAGE SYSTEMS SHALL BE CLEANED AND RE-VEGETATED AT THE END OF THE PROJECT.

26. ALL DESIGNS SHALL CONFORM TO, AND ALL WORK WILL BE PERFORMED IN ACCORDANCE WITH, THE STANDARDS AND SPECIFICATIONS OF THE PUBLICATION ENTITLED MANUAL FOR EROSION & SEDIMENT CONTROL IN GEORGIA, 6th EDITION (WHITE BOOK)

27. SILT FENCE DENOTED BY:
---XX---- TYPE "NS"
---XXX--- TYPE "S"

28. ADDITIONAL EROSION AND SEDIMENTATION CONTROL MEASURES SHALL BE INSTALLED AS DEEMED NECESSARY BY ON-SITE INSPECTION.

**29. NON-EXEMPT ACTIVITIES SHALL NOT BE CONDUCTED WITHIN THE 25 OR 50-FOOT UNDISTURBED STREAM BUFFERS AS MEASURED FROM THE POINT OF WRESTED VEGETATION OR WITHIN 25-FEET OF THE COASTAL MARSHLAND BUFFER AS MEASURED FROM THE JURISDICTIONAL DETERMINATION LINE WITHOUT FIRST ACQUIRING THE NECESSARY VARIANCES AND PERMITS.**

30. **THE DESIGN PROFESSIONAL WHO PREPARED THE ES&PC PLAN IS TO INSPECT THE INSTALLATION OF THE INITIAL SEDIMENT STORAGE REQUIREMENTS AND PERIMETER CONTROL BMP'S WITHIN 7 DAYS AFTER INSTALLATION.**

31. **AMENDMENTS/REVISIONS TO THE ES&PC PLAN WHICH HAVE A SIGNIFICANT EFFECT ON BMP'S WITH A HYDRAULIC COMPONENT MUST BE CERTIFIED BY THE DESIGN PROFESSIONAL.**

| SITE SIZE, ACRES | 0-4.99 | 5-9.99 | 10-24.99 | 25-49.99 | 50-99.99 | 100-249.99 | 250-499.99 | 500+ |
|---|---|---|---|---|---|---|---|---|
| 1.00-10 | 75 | 150 | 200 | 400 | 750 | 750 | 750 | 750 |
| 10.01-25 | [✓ 50] | 100 | 100 | 200 | 300 | 500 | 750 | 750 |
| 25.01-50 | 50 | 50 | 100 | 100 | 200 | 300 | 750 | 750 |
| 50.01-100 | 50 | 50 | 50 | 100 | 100 | 150 | 300 | 600 |
| 100.01+ | 50 | 50 | 50 | 50 | 50 | 100 | 200 | 100 |

APPENDIX B
NEPHELOMETRIC TURBIDITY UNIT (NTU) TABLES
WARM WATER (SUPPORTING WARM WATER FISHERIES)
SURFACE WATER DRAINAGE AREA, SQ. MILES

## VEGETATION SCHEDULE

AREAS TO RECEIVE TEMPORARY VEGETATION SHALL BE SMOOTHED WITH A SURFACE OF ACCEPTABLE GROWING SOIL, NOT NECESSARILY TOPSOIL FROM STOCKPILE. AREAS TO RECEIVE PERMANENT VEGETATION SHALL BE TOPSOILED AS REQUIRED IN CONTRACT.

LIME SHALL BE APPLIED AT A RATE OF 2.0 TONS PER ACRE (90# PER 1000 SQ. FT.) UNLESS SOIL TESTING SHOWS OTHER REQUIRED APPLICATION RATE.

FERTILIZER (10-10-10 OR EQUIVALENT) SHALL BE APPLIED AT A RATE OF 0.75 TONS PER ACRE (35# PER 1000 SQ. FT.) INITIAL APPLICATION AND 0.25 TONS PER ACRE (12# PER 1000 SQ. FT.) APPLIED IN SPRING IF INITIAL PLANTING IS PRIOR TO DECEMBER OF PREVIOUS YEAR.

### Ds1 TEMPORARY VEGETATION SCHEDULE - MULCHING ONLY

MULCH OR TEMPORARY GRASSING SHALL BE APPLIED TO ALL EXPOSED AREAS WITHIN 14 DAYS OF DISTUR-BANCE. MULCH CAN BE USED AS A SINGULAR EROSION CONTROL DEVICE FOR UP TO SIX MONTHS, BUT IT SHALL BE APPLIED AT THE APPROPRIATE DEPTH, DEPENDING ON THE MATERIAL USED, ANCHORED AND HAVE A CONTINU-OUS 90% COVER OR GREATER OF THE SOIL SURFACE.

MAINTENANCE SHALL BE REQUIRED TO MAINTAIN APPROPRIATE DEPTH AND 90% COVER. TEMPORARY VEGETATION MAY BE EMPLOYED INSTEAD OF MULCH IF THE AREA WILL REMAIN UNDISTURBED FOR LESS THAN SIX MONTHS.

IF ANY AREA WILL REMAIN UNDISTURBED FOR GREATER THAN SIX MONTHS, PERMANENT VEGETATIVE TECH-NIQUES SHALL BE EMPLOYED

### Ds2 TEMPORARY VEGETATION SCHEDULE - W/TEMPORARY SEEDING

| | |
|---|---|
| ____ | BARLEY - 150# PER ACRE (PLANT BETWEEN SEPTEMBER 1 AND MARCH 15) |
| ____ | LESPEDEZA - 40# PER ACRE (PLANT BETWEEN JANUARY 1 AND MARCH 1) |
| ____ | LOVEGRASS (WEEPING) - 4# PER ACRE (PLANT BETWEEN FEBRUARY 15 AND JUNE 15) |
| ____ | MILLET (BROWNTOP) - 40# PER ACRE (PLANT BETWEEN APRIL 1 AND JULY 1) |
| X | **MILLET (PEARL) - 50# PER ACRE (PLANT BETWEEN APRIL 1 AND SEPTEMBER 1)** |
| ____ | OATS - 60# PER ACRE (PLANT BETWEEN SEPTEMBER 1 AND DECEMBER 1) |
| X | **RYE- 3 bu. PER ACRE (PLANT BETWEEN SEPTEMBER 1 AND MARCH 1)** |
| X | **RYE GRASS - 40# PER ACRE (PLANT BETWEEN AUGUST 15 AND APRIL 1)** |
| ____ | SUDAN GRASS - 60# PER ACRE (PLANT BETWEEN MARCH 1 AND AUGUST 1) |
| ____ | TRITICALE- (PLANT BETWEEN SEPTEMBER 15 AND FEBRUARY 1) COASTAL |
| ____ | WHEAT - 3 bu. PER ACRE (PLANT BETWEEN SEPTEMBER 15 AND FEBRUARY 1) |

### Ds3 PERMANENT VEGETATION SCHEDULE - W/PERMANENT VEGETATION

| | |
|---|---|
| ____ | BAHIA PENSACOLA - 60# PER ACRE (PLANT BETWEEN JANUARY 1 AND DECEMBER 31) - PEIDMONT/COASTAL |
| ____ | BAHIA WILMINGTON 60# PER ACRE (PLANT BETWEEN JANUARY 1 AND DECEMBER 31) - MOUNTAIN/PEIDMONT |
| X | PRINCESS 77 BERMUDA SEED (HULLED) - 10# PER ACRE (PLANT BETWEEN FEBRUARY 1 AND JULY 1) PIEDMONT/ COASTAL |
| X | PRINCESS 77 BERMUDA SEED (UNHULLED) - 10# PER ACRE (PLANT BETWEEN NOVEMBER 1 AND FEBRUARY 1) PIEDMONT/ COASTAL |
| X | PRINCESS 77 SARAHA SEED (HULLED) - 10# PER ACRE (PLANT BETWEEN MARCH 15 AND JULY 15) PIEDMONT/ COASTAL |
| X | **CENTIPEDE SEED - BLOCK SOD ONLY (PLANT BETWEEN APRIL AND JULY)** |
| ____ | WEEPING LOVE GRASS - 4# PER ACRE (PLANT BETWEEN FEBRUARY 1 AND JUNE 15) |
| ____ | SWITCH GRASS - 40# PER ACRE (PLANT BETWEEN MARCH 1 AND JUNE 1) |

### Ds4 PERMANENT VEGETATION SCHEDULE - W/SODDING

| | |
|---|---|
| X | COMMON BERMUDA - SOD |

HAY OR STRAW MULCH SHALL BE APPLIED AT 2 TONS PER ACRES AFTER PLANTING AND SHALL BE TACKED OR OTHERWISE STABILIZED WHERE SLOPES OR WINDS WOULD ALLOW MOVEMENT OTHERWISE. IF A LANDSCAPING PLAN REQUIRES GROUND COVER OTHER THAN THAT SHOWN ABOVE, THE PROVISIONS OF THE LANDSCAPING PLAN SHALL SUPERSEDE THAT ABOVE. AREAS VEGETATION CONFORMING TO THE APPROPRIATE PROVISION ABOVE. TO BE LANDSCAPED AT A LATER DATE SHALL BE DEEMED TO REQUIRE TEMPORARY

## EROSION CONTROL NOTES:

1. THIS PROJECT HAS RECEIVING WATERS, WHICH INCLUDE STREAMS, LAKES, RESIDENTIAL AREAS, WETLANDS, ETC. THIS PROJECT HAS NO IMPACT ON DOWNSTREAM STRUCTURES. THERE ARE RECEIVING WETLANDS AND TRIBUTARY TO DASHER CREEK.

2. PRODUCT SPECIFIC PRACTICES:

PETROLEUM BASED PRODUCTS - CONTAINERS FOR PRODUCTS SUCH AS FUELS, LUBRICANTS AND TARS WILL BE INSPECTED DAILY FOR LEAKS AND SPILLS. THIS INCLUDES ON-SITE VEHICLE AND MACHINERY DAILY INSPECTIONS AND REGULAR PREVENTATIVE MAINTENANCE OF SUCH EQUIPMENT. EQUIPMENT MAINTENANCE AREAS WILL BE LOCATED AWAY FROM STATE WATER, NATURAL DRAINS AND STORM WATER DRAINAGE INLETS. IN ADDITION, TEMPORARY FUELING TANKS SHALL HAVE A SECONDARY CONTAINMENT LINER TO PREVENT/MINIMIZE SITE CONTAMINATION. DISCHARGE OF OILS, FUELS AND LUBRICANTS IS PROHIBITED. PROPER DISPOSAL METHODS SHALL INCLUDE COLLECTION IN A SUITABLE CONTAINER AND DISPOSAL AS REQUIRED BY LOCAL AND STATE REGULATIONS.

PAINTS/FINISHES/SOLVENTS - ALL PRODUCTS SHALL BE STORED IN TIGHTLY SEALED ORIGINAL CONTAINERS WHEN NOT IN USE. EXCESS PRODUCT SHALL NOT BE DISCHARGED TO THE STORM WATER COLLECTION SYSTEM. EXCESS PRODUCT, MATERIALS USED WITH THESE PRODUCTS AND PRODUCT CONTAINERS SHALL BE DISPOSED OF ACCORDING TO MANUFACTURER'S SPECIFICATIONS AND RECOMMENDATIONS.

CONCRETE TRUCK WASHING - A PIT SHALL BE INSTALLED TO ALLOW CONCRETE TRUCKS TO WASH OUT AND THIS DEBRIS SHALL BE CLEANED OUT AT THE COMPLETION OF THE PROJECT.

WASHOUT OF THE DRUM AT THE CONSTRUCTION SITE IS PROHIBITED. ONLY CONCRETE WASH DOWN OF TOOLS, CONCRETE MIXER CHUTES, HOPPER AND THE REAR OF VEHICLES WILL BE ALLOWED.

FERTILIZER/HERBICIDES - THESE PRODUCTS SHALL BE APPLIED AT RATES THAT DO NOT EXCEED THE MANUFACTURER'S SPECIFICATIONS OR ABOVE GUIDELINES SET FORTH IN THE CROP ESTABLISHMENT OR IN THE GSWCC MANUAL FOR EROSION AND SEDIMENT CONTROL IN GEORGIA. ANY STORAGE OF THESE MATERIALS SHALL BE UNDER ROOF IN SEALED CONTAINERS.

3. NO WASTE SHALL BE DISPOSED OF INTO STORM WATER INLETS OR WATERS OF THE STATE:

## WASTE MATERIALS

ALL WASTE MATERIAL SHALL BE COLLECTED AND STORED IN A SECURELY LIDDED METAL DUMPSTER. THE DUMPSTER SHALL MEET ALL SOLID WASTE MANAGEMENT REGULATIONS. ALL TRASH AND CONSTRUCTION DEBRIS FROM THE SITE WILL BE DEPOSITED IN THE DUMPSTER. THE DUMPSTER SHALL BE EMPTIED A MINIMUM OF ONCE PER WEEK OR MORE OFTEN IF NECESSARY AND TRASH WILL BE HAULED AS REQUIRED BY LOCAL REGULATIONS. NO CONSTRUCTION WASTE SHALL BE BURIED ON-SITE.

**WASTE MATERIALS SHALL NOT BE DISCHARGED TO WATERS OF THE STATE, EXCEPT AS AUTHORIZED BY A SECTION 404 PERMIT**

ALL PERSONNEL SHALL BE INSTRUCTED ON PROPER PROCEDURES FOR WASTE DISPOSAL. A NOTICE STATING THESE PRACTICES WILL BE POSTED AT THE JOBSITE AND THE CONTRACTOR WILL BE RESPONSIBLE FOR SEEING THAT THESE PROCEDURES ARE FOLLOWED.

BUILDING MATERIALS
NO BUILDING OR CONSTRUCTION MATERIALS SHALL BE BURIED OR DISPOSED OF ON-SITE. ALL SUCH MATERIAL SHALL BE DISPOSED OF IN PROPER WASTE DISPOSAL PROCEDURES. DESCRIPTION OF PRACTICES TO PROVIDE COVER FOR BUILDING MATERIALS AND BUILDING PRODUCTS ON SITE. ALL BUILDING PRODUCTS, CONSTRUCTION WASTE, TRASH, LANDSCAPE MATERIALS, FERTILIZERS, PESTICIDES, HERBICIDES, DETERGENTS, SANITARY WASTE, AND OTHER MATERIALS MUST BE COVERED USING PLASTIC SHEETING OR TEMPORARY ROOFS TO MINIMIZE EXPOSURE TO PRECIPITATION AND TO STORMWATER.

## HAZARDOUS MATERIALS

ALL HAZARDOUS WASTE MATERIALS SHALL BE DISPOSED OF IN THE MANNER SPECIFIED BY LOCAL, STATE, AND/OR FEDERAL REGULATIONS AND BY THE MANUFACTURER OF SUCH PRODUCTS. THE JOBSITE SUPERINTENDENT, WHO SHALL ALSO BE RESPONSIBLE FOR SEEING THAT THESE PRACTICES ARE FOLLOWED, SHALL INSTRUCT SITE PERSONNEL IN THESE PRACTICES. MATERIAL SAFETY DATA SHEETS (MSDS's) FOR EACH SUBSTANCE WITH HAZARDOUS PROPERTIES THAT IS USED ON THE JOBSITE SHALL BE OBTAINED AND USED FOR THE PROPER MANAGEMENT OF POTENTIAL WASTES THAT MAY RESULT FROM THESE PRODUCTS. AN MSDS SHALL BE POSTED IN THE IMMEDIATE AREA WHERE SUCH PRODUCT IS STORED AND/OR USED AND ANOTHER COPY OF EACH MSDS SHALL BE MAINTAINED IN THE ES&PC PLAN FILE AT THE JOBSITE CONSTRUCTION TRAILER OFFICE. EACH EMPLOYEE WHO MUST HANDLE A SUBSTANCE WITH HAZARDOUS PROPERTIES SHALL BE INSTRUCTED ON THE USE OF MSDS SHEETS AND THE SPECIFIC INFORMATION IN THE APPLICABLE MSDS FOR THE PRODUCT HE/SHE IS USING, PARTICULARLY REGARDING SPILL CONTROL TECHNIQUES.

THE CONTRACTOR SHALL IMPLEMENT THE SPILL PREVENTION CONTROL AND COUNTERMEASURES (SPCC) PLAN FOUND WITHIN THIS ES&PC PLAN AND SHALL TRAIN ALL PERSONNEL IN THE PROPER CLEANUP AND HANDLING OF SPILLED MATERIALS. NO SPILLED HAZARDOUS MATERIAL OR HAZARDOUS MATERIALS SHALL BE ALLOWED TO COME IN CONTACT WITH STORMWATER DISCHARGES. IF SUCH CONTACT OCCURS, THE STORMWATER DISCHARGE SHALL BE CONTAINED ON-SITE UNTIL APPROPRIATE MEASURES IN COMPLIANCE WITH STATE AND FEDERAL REGULATIONS ARE TAKEN TO DISPOSE OF SUCH CONTAMINATED STORMWATER. IT SHALL BE THE RESPONSIBILITY OF THE CONTRACTOR TO PROPERLY TRAIN ALL PERSONNEL IN THE USE OF THE SPCC PLAN.

## SANITARY WASTES

A MINIMUM OF ONE PORTABLE SANITARY UNIT SHALL BE PROVIDED FOR EVERY TEN (10) WORKERS ON-SITE. ALL SANITARY WASTE SHALL BE COLLECTED FROM THE PORTABLE UNITS A MINIMUM OF ONE TIME PER WEEK BY A LICENSED PORTABLE FACILITY PROVIDER IN COMPLETE COMPLIANCE WITH LOCAL AND STATE REGULATIONS.

ALL SANITARY WASTE UNITS SHALL BE LOCATED IN ONE AREA WHERE THE LIKELIHOOD OF THE UNIT CONTRIBUTING TO STORM WATER DISCHARGE IS NEGLIGIBLE. ADDITIONAL CONTAINMENT BMP's MUST BE IMPLEMENTED, SUCH AS GRAVEL BAGS OR SPECIALLY DESIGNED PLASTIC SKID CONTAINERS AROUND BASE, TO PREVENT WASTES CONTRIBUTING TO STORM WATER DISCHARGES. THE LOCATION OF SANITARY WASTE UNITS MUST BE IDENTIFIED ON THE EROSION CONTROL PLAN BY THE CONTRACTOR ONCE THE LOCATIONS HAVE BEEN DETERMINED.

SANITARY SEWER WILL BE PROVIDED BY MUNICIPAL AUTHORITY/SEPTIC SYSTEM AT THE COMPLETION OF THIS PROJECT.

4. SPILL CLEANUP AND CONTROL PRACTICES

* LOCAL, STATE AND MANUFACTURER'S RECOMMENDED METHODS FOR SPILL CLEANUP SHALL BE CLEARLY POSTED AND PROCEDURES SHALL BE MADE AVAILABLE TO SITE PERSONNEL.
* MATERIAL AND EQUIPMENT NECESSARY FOR SPILL CLEANUP SHALL BE KEPT IN THE MATERIAL STORAGE AREAS. TYPICAL MATERIALS AND EQUIPMENT INCLUDES, BUT IS NOT LIMITED TO, BROOMS, DUSTPANS, MOPS, RAGS, GLOVES, GOGGLES, CAT LITTER, SAND, SAWDUST AND PROPERLY LABELED PLASTIC AND METAL WASTE CONTAINERS.
* SPILL PREVENTION PRACTICES AND PROCEDURES SHALL BE REVIEWED AFTER A SPILL AND ADJUSTED AS NECESSARY TO PREVENT FUTURE SPILLS.
* ALL SPILLS SHALL BE CLEANED IMMEDIATELY UPON DISCOVERY. ALL SPILLS SHALL BE REPORTED AS REQUIRED BY LOCAL, STATE AND FEDERAL REGULATIONS.
* FOR SPILLS THAT IMPACT SURFACE WATER (LEAVE A SHEEN ON SURFACE WATER), THE NATIONAL RESPONSE CENTER (NRC) SHALL BE CONTACTED WITHIN 24 HRS. AT 1-800-424-8802.
* FOR SPILLS OF UNKNOWN AMOUNT, THE NATIONAL CENTER (NRC) SHALL BE CONTACTED WITHIN 24 HRS. AT 1-800-424-8802.
* FOR SPILLS GREATER THAN 25 GALLONS AND NO SURFACE WATER IMPACTS, THE GEORGIA EPD SHALL BE CONTACTED WITHIN 24 HRS.
* FOR SPILLS LESS THAN 25 GALLONS AND NO SURFACE WATER IMPACTS, THE SPILL SHALL BE CLEANED UP AND LOCAL AGENCIES SHALL BE CONTACTED AS REQUIRED.

THE CONTRACTOR SHALL NOTIFY THE LICENSED PROFESSIONAL WHO PREPARED THIS PLAN IF MORE THAN 1320 GALLONS OF PETROLEUM IS STORED ON-SITE (THIS INCLUDES CAPACITIES OF EQUIPMENT) OR IF ANY ONE PIECE OF EQUIPMENT HAS A CAPACITY GREATER THAN 560 GALLONS. THE CONTRACTOR WILL NEED A SPILL PREVENTION CONTAINMENT AND COUNTERMEASURES PLAN PREPARED BY THAT LICENSED PROFESSIONAL.

5. THE ES&PC PLAN CONTAINS MEASURES THAT SHALL BE INSTALLED DURING THE CONSTRUCTION PROCESS TO CONTROL POLLUTANTS IN STORM WATER THAT WILL OCCUR AFTER CONSTRUCTION OPERATIONS HAVE BEEN COMPLETED, WHICH INCLUDE, BUT NOT LIMITED TO INLET PROTECTION DEVICES, SILT FENCING AND A SEDIMENT POND. THE INSTALLATION OF THESE DEVICES MAY BE SUBJECT TO SECTION 404 OF THE FEDERAL CLEAN WATER ACT.

NOTE: THE CONTRACTOR IS RESPONSIBLE FOR THE INSTALLATION AND MAINTENANCE OF STORM WATER MANAGEMENT DEVICES PRIOR TO FINAL STABILIZATION OF THE SITE.

## RETENTION OF RECORDS

1. THE PRIMARY PERMITTEE SHALL RETAIN THE FOLLOWING RECORDS AT THE CONSTRUCTION SITE OR THE RECORDS SHALL BE READILY AVAILABLE AT A DESIGNATED ALTERNATIVE LOCATION FROM COMMENCEMENT OF CONSTRUCTION UNTIL SUCH TIME AS A NOT IS SUBMITTED IN ACCORDANCE WITH PART VI.

a. A COPY OF ALL NOTICE OF INTENT SUBMITTED TO EPD.
b. A COPY OF THE EROSION, SEDIMENTATION AND POLLUTION CONTROL PLAN REQUIRED BY THIS PERMIT.
c. THE DESIGN PROFESSIONAL'S REPORT OF THE RESULTS OF THE INSPECTION CONDUCTED IN ACCORDANCE WITH PART IV.A.5 OF HIS PERMIT.
d. A COPY OF ALL SAMPLING INFORMATION, RESULTS, AND REPORTS REQUIRED BY THIS PERMIT.
e. A COPY OF ALL INSPECTION REPORTS GENERATED IN A ACCORDANCE WITH PART IV.D.4.a. OF THIS PERMIT.
f. A COPY OF ALL VIOLATION SUMMARIES AND VIOLATION SUMMARY REPORTS GENERATED IN ACCORDANCE WITH PART III.D.2 OF THIS REPORT, AND
g. DAILY RAINFALL INFORMATION COLLECTED IN ACCORDANCE WITH PART IV.D.4.a.(2) OF THIS PERMIT.

2. COPIES OF ALL NOI'S, NOT'S, INSPECTION REPORTS, SAMPLING REPORTS (INCLUDING ALL CALIBRATION AND MAINTENANCE RECORDS AND ALL ORIGINAL STRIP CHART RECORDINGS FOR CONTINUOUS MONITORING INSTRUMENTATION OR OTHER REPORTS REQUESTED BY EPD, EROSION SEDIMENTATION AND POLLUTION CONTROL PLANS, RECORDS OF ALL DATA USED TO COMPLETE THE NOI TO BE COVERED BY THIS PERMIT AND ALL OTHER RECORDS REQUIRED BY THIS PERMIT SHALL BE RETAINED BY THE PERMITTEE WHO EITHER PRODUCED OR USED IT FOR A PERIOD OF AT LEAST THREE YEARS FROM THE DATE THAT THE NOT IS SUBMITTED IN ACCORDANCE WITH PART VI OF THIS PERMIT. THESE RECORDS MUST BE MAINTAINED AT THE PERMITTEE'S PRIMARY PLACE OF BUSINESS OR AT A DESIGNATED ALTERNATIVE LOCATION ONCE THE CONSTRUCTION ACTIVITY HAS CEASED AT THE PERMITTED SITE. THIS PERIOD MAY BE EXTENDED BY REQUEST OF THE EPD AT ANY TIME UPON WRITTEN NOTIFICATION TO THE PERMITTEE.

## NOTE: CERTIFICATION STATEMENT

"I CERTIFY UNDER PENALTY OF LAW THAT THIS PLAN WAS PREPARED AFTER A SITE VISIT TO THE LOCATIONS DESCRIBED HEREIN BY MYSELF OR MY AUTHORIZED AGENT, UNDER MY SUPERVISION."

WILLIAM D. MARTIN, P.E. #36129, CERT. #55308 Will Martin

**NOTE:**
**PETROLEUM STORAGE SHALL BE DONE IN ACCORDANCE WITH ONE OF THE TWO FOLLOWING METHODS TO PREVENT STORMWATER DISCHARGES ON SITE:**

**A. ALL PETROLEUM STORAGE CONTAINERS SHALL BE COVERED WITH PLASTIC SHEETING OR BE LOCATED UNDER A TEMPORARY ROOF.**
**B. ALL PETROLEUM STORAGE CONTAINERS SHALL BE LOCATED IN A SECONDARY CONTAINMENT AREA.**

## CERTIFICATIONS

1. "I, PLAN PREPARER, CERTIFY UNDER PENALTY OF LAW THAT THIS DOCUMENT AND ALL ATTACHMENTS WERE PREPARED UNDER MY DIRECTION OR SUPERVISION IN ACCORDANCE WITH A SYSTEM DESIGNED TO ASSURE THAT QUALIFIED PERSONNEL PROPERLY GATHER AND EVALUATE THE INFORMATION SUBMITTED. BASED UPON MY INQUIRY OF THE PERSON OR PERSONS WHO MANAGE THE SYSTEM, OR THOSE PERSONS DIRECTLY RESPONSIBLE FOR GATHERING THE INFORMATION. THE INFORMATION SUBMITTED IS, TO THE BEST OF MY KNOWLEDGE AND BELIEF, TRUE, ACCURATE, AND COMPLETE. I AM AWARE THAT THERE ARE SIGNIFICANT PENALTIES FOR SUBMITTING FALSE INFORMATION, INCLUDING THE POSSIBILITY OF FINE AND IMPRISONMENT FOR KNOWING VIOLATIONS."

CERTIFIED BY: Will Martin 0000055308
DESIGN PROFESSIONAL'S SIGNATURE GSWCC LEVEL II CERT. #

2. I, PLAN PREPARER, CERTIFICATION # 8762, BY SIGNING THE SEAL ON THIS DOCUMENT CERTIFY THAT THE PERMITTEE'S EROSION, SEDIMENTATION AND POLLUTION CONTROL PLAN PROVIDES FOR AN APPROPRIATE AND COMPREHENSIVE SYSTEM OF BEST MANAGEMENT PRACTICES REQUIRED BY THE GEORGIA WATER QUALITY CONTROL ACT AND THE DOCUMENT "MANUAL FOR EROSION AND SEDIMENT CONTROL IN GEORGIA" (MANUAL) PUBLISHED BY THE **GEORGIA SOIL AND WATER CONSERVATION COMMISSION** AS OF JANUARY 1 OF THE YEAR IN WHICH THE LAND-DISTURBING ACTIVITY WAS PERMITTED, PROVIDES FOR THE SAMPLING OF RECEIVING WATER(S) OR THE SAMPLING OF THE STORM WATER OUTFALLS AND THAT THE DESIGNED SYSTEM OF BEST MANAGEMENT PRACTICES AND SAMPLING METHODS IS EXPECTED TO MEET THE REQUIREMENTS CONTAINED IN THE GENERAL NPDES PERMIT NO. GAR 100001.

"I CERTIFY THAT THE PERMITTEE'S EROSION, SEDIMENTATION AND POLLUTION PLAN PROVIDES FOR AN APPROPRIATE AND COMPREHENSIVE SYSTEM OF BEST MANAGEMENT PRACTICES REQUIRED BY THE GEORGIA WATER QUALITY CONTROL ACT AND THE DOCUMENT "MANUAL FOR EROSION AND SEDIMENT CONTROL IN GEORGIA" PUBLISHED BY THE **GEORGIA SOIL AND WATER CONSERVATION COMMISSION** AS OF JANUARY 1 OF THE YEAR IN WHICH THE LAND-DISTURBING ACTIVITY WAS PERMITTED, PROVIDES FOR THE SAMPLING OF THE RECEIVING WATER(S) OR THE SAMPLING OF THE STORM WATER OUTFALLS AND THAT THE DESIGNED SYSTEM OF BEST MANAGEMENT PRACTICES AND SAMPLING METHODS IS EXPECTED TO MEET THE REQUIREMENTS CONTAINED IN THE GENERAL NPDES PERMIT NO. GAR 100001."
CERT.# 0000055308

CERTIFY BY: Will Martin

"I CERTIFY UNDER PENALTY OF LAW THAT THIS DOCUMENT AND ALL ATTACHMENTS WERE PREPARED UNDER MY DIRECTION OR SUPERVISION IN ACCORDANCE WITH A SYSTEM DESIGNED TO ASSURE THAT QUALIFIED PERSONNEL PROPERLY GATHER AND EVALUATE THE INFORMATION SUBMITTED. BASED UPON MY INQUIRY OF THE PERSON OR PERSONS WHO MANAGE THE SYSTEM, OR THOSE PERSONS DIRECTLY RESPONSIBLE FOR GATHERING THE INFORMATION, THE INFORMATION SUBMITTED IS, TO THE BEST OF MY KNOWLEDGE AND BELIEF, TRUE, ACCURATE, AND COMPLETE. I AM AWARE THAT THERE ARE SIGNIFICANT PENALTIES FOR SUBMITTING FALSE INFORMATION, INCLUDING THE POSSIBILITY OF FINE AND IMPRISONMENT FOR KNOWING VIOLATIONS." CERT.# 0000055308

CERTIFY BY: Will Martin
PRIMARY PERMITTEE

DESIGN PROFESSIONAL 7-DAY VISIT CERTIFICATION

DATE OF INSPECTION: ____________

"I CERTIFY THE SITE WAS IN COMPLIANCE WITH THE ES&PC PLAN ON THE DATE OF INSPECTION."

______________________ ______________
GSWCC LEVEL II DESIGN CERTIFICATION CERTIFICATION #

INSPECTION REVEALED THE FOLLOWING DISCREPANCIES FROM THE ES&PC PLAN.

THESE DISCREPANCIES MUST BE ADDRESSED IMMEDIATELY AND A RE-INSPECTION SCHEDULED. WORK SHALL NOT PROCEED ON THE SITE UNTIL DESIGN PROFESSIONAL CERTIFICATION IS OBTAINED.

## INSPECTIONS

1. EACH DAY WHEN ANY TYPE OF CONSTRUCTION ACTIVITY HAS TAKEN PLACE AT A PRIMARY PERMITTEE'S SITE, CERTIFIED PERSONNEL PROVIDED BY THE PRIMARY PERMITTEE SHALL INSPECT: (A) ALL AREAS AT THE PRIMARY PERMITTEE'S SITE WHERE PETROLEUM PRODUCTS ARE STORED, USED, OR HANDLED FOR SPILLS AND LEAKS FROM VEHICLES AND EQUIPMENT & (B) ALL LOCATIONS AT THE PRIMARY PERMITTEE'S SITE WHERE VEHICLES ENTER OR EXIT THE SITE FOR EVIDENCE OF OFF-SITE SEDIMENT TRACKING. THESE INSPECTIONS MUST BE CONDUCTED UNTIL NOTICE OF TERMINATION IS SUBMITTED.

2. MEASURE AND RECORD RAINFALL ONCE EVERY 24 HOUR EXCEPT ANY NON-WORKING SATURDAY, NON-WORKING SUNDAY AND NON-WORKING FEDERAL HOLIDAY UNTIL A NOTICE OF TERMINATION IS SUBMITTED. MEASUREMENTS OF RAINFALL MAY BE SUSPENDED IF ALL AREAS OF THE SITE HAVE UNDERGONE FINAL STABILIZATION OR ESTABLISHED A CROP OF ANNUAL VEGETATION AND SEEDING OF TARGET PERENNIALS APPROPRIATE FOR THE REGION.

3. CERTIFIED PERSONNEL (PROVIDED BY PRIMARY PERMITTEE) SHALL INSPECT THE FOLLOWING AT LEAST ONCE EVERY SEVEN (7) CALENDAR DAYS AND WITHIN 24 HOURS OF THE END OF A STORM THAT IS 0.5 INCHES RAINFALL OR GREATER (UNLESS SUCH STORM ENDS AFTER 5:00 PM ON ANY FRIDAY OR ON ANY NON-WORKING SATURDAY, NON-WORKING SUNDAY OR ON ANY NON-WORKING FEDERAL HOLIDAY IN WHICH CASE THE INSPECTION SHALL BE COMPLETED BY THE END OF THE NEXT BUSINESS DAY AND OR WORKING DAY, WHICHEVER OCCURS FIRST): (A) DISTURBED AREAS OF THE PRIMARY PERMITTEE'S CONSTRUCTION SITE: (B) AREAS USED BY THE PRIMARY PERMITTEE FOR STORAGE OF MATERIALS THAT ARE EXPOSED TO PRECIPITATION: AND (C) STRUCTURAL CONTROL MEASURES. EROSION AND SEDIMENT CONTROL MEASURES IDENTIFIED IN THE PLAN APPLICABLE TO THE PRIMARY PERMITTEE'S SITE SHALL BE OBSERVED TO ENSURE THAT THEY ARE OPERATING CORRECTLY. WHERE DISCHARGE LOCATIONS OR POINTS ARE ACCESSIBLE, THEY SHALL BE INSPECTED TO ASCERTAIN WHETHER EROSION CONTROL MEASURES ARE EFFECTIVE IN PREVENTING SIGNIFICANT IMPACTS TO RECEIVING WATER(S). FOR AREAS OF A SITE THAT HAVE UNDERGONE FINAL STABILIZATION OR ESTABLISHED A CROP OF ANNUAL VEGETATION AND A SEEDING OF TARGET PERENNIALS APPROPRIATE FOR THE REGION, THE PRIMARY PERMITTEE MUST COMPLY WITH PART IV.D.4.A.(4). THESE INSPECTIONS MUST BE CONDUCTED UNTIL A NOTICE OF TERMINATION IS SUBMITTED.

4. CERTIFIED PERSONNEL (PROVIDED BY THE PRIMARY PERMITTEE) SHALL INSPECT AT LEAST ONCE PER MONTH DURING THE TERM OF THIS PERMIT (I.E., UNTIL A NOTICE OF TERMINATION IS RECEIVED BY EPD) THE AREAS OF THE SITE THAT HAVE UNDERGONE FINAL STABILIZATION OR ESTABLISHED A CROP OF ANNUAL VEGETATION AND A SEEDING OF TARGET PERENNIALS APPROPRIATE FOR THE REGION. THESE AREAS SHALL BE INSPECTED FOR EVIDENCE OF, OR THE POTENTIAL FOR, POLLUTANTS ENTERING THE DRAINAGE SYSTEM AND THE RECEIVING WATER(S). EROSION AND SEDIMENT CONTROL MEASURES IDENTIFIED IN THE PLAN SHALL BE OBSERVED TO ENSURE THAT THEY ARE OPERATING CORRECTLY. WHERE DISCHARGE LOCATIONS OR POINTS ARE ACCESSIBLE, THEY SHALL BE INSPECTED TO ASCERTAIN WHETHER EROSION CONTROL MEASURES ARE EFFECTIVE IN PREVENTING SIGNIFICANT IMPACTS TO RECEIVING WATER(S).

5. BASED ON THE RESULTS OF EACH INSPECTION, THE SITE DESCRIPTION AND THE POLLUTION PREVENTION CONTROL MEASURES IDENTIFIED IN THE EROSION, SEDIMENTATION AND POLLUTION CONTROL PLAN, THE PLAN SHALL BE REVISED AS APPROPRIATE NOT LATER THAN SEVEN (7) CALENDAR DAYS FOLLOWING EACH INSPECTION. IMPLEMENTATION OF SUCH CHANGES SHALL BE MADE AS SOON AS PRACTICAL BUT IN NO CASE LATER THAN SEVEN (7) CALENDAR DAYS FOLLOWING EACH INSPECTION.

6. A REPORT OF EACH INSPECTION THAT INCLUDES THE NAME(S) OF CERTIFIED PERSONNEL MAKING EACH INSPECTION, THE DATE(S) OF EACH INSPECTION, CONSTRUCTION PHASE (I.E. INITIAL, INTERMEDIATE, OR FINAL), MAJOR OBSERVATIONS RELATING TO THE EROSION, SEDIMENTATION AND POLLUTION CONTROL PLAN, AND ACTIONS TAKEN IN ACCORDANCE WITH PART IV.D.4.a.(5). OF THE PERMIT SHALL BE MADE AND RETAINED AT THE SITE OR BE READILY AVAILABLE AT A DESIGNATED ALTERNATE LOCATION UNTIL THE ENTIRE SITE OR THAT PORTION OF A CONSTRUCTION PROJECT THAT HAS BEEN PHASED HAS UNDERGONE FINAL STABILIZATION AND A NOTICE OF TERMINATION IS SUBMITTED TO EPD. SUCH REPORTS SHALL BE READILY AVAILABLE BY END OF THE SECOND BUSINESS DAY AND/OR WORKING DAY AND SHALL IDENTIFY ALL INCIDENTS OF BEST MANAGEMENT PRACTICES THAT HAVE NOT BEEN PROPERLY INSTALLED AND/OR MAINTAINED AS DESCRIBED IN THE PLAN. WHERE THE REPORT DOES NOT IDENTIFY ANY INCIDENTS, THE INSPECTION REPORT SHALL CONTAIN A CERTIFICATION THAT THE BEST MANAGEMENT PRACTICES ARE IN COMPLIANCE WITH THE EROSION, SEDIMENTATION AND POLLUTION CONTROL PLAN. THE REPORT SHALL BE SIGNED IN ACCORDANCE WITH PART V.G.2. OF THIS PERMIT.

## STORMWATER SAMPLING

1. STORM WATER SAMPLES ARE TO BE ANALYZED IN ACCORDANCE WITH METHODOLOGY AND TEST PROCEDURES ESTABLISHED BY 40 CFR PART 136 AND THE GUIDANCE DOCUMENT TITLED "NPDES STORM WATER SAMPLING GUIDANCE DOCUMENT, EPA 833-B-92-001".

2. STORM WATER IS TO BE SAMPLED FOR NEPHELOMETRIC TURBIDITY UNITS (NTU) AT THE MONITORING LOCATIONS. A DISCHARGE OF STORM WATER RUNOFF FROM DISTURBED AREAS WHERE BMP's HAVE NOT BEEN PROPERLY DESIGNED, INSTALLED, AND MAINTAINED SHALL CONSTITUTE A SEPARATE VIOLATION FOR EACH DAY ON WHICH SUCH CONDITION RESULTS IN THE TURBIDITY OF THE DISCHARGE EXCEEDING 50 THE VALUE THAT WAS SELECTED FROM APPENDIX B IN BID NO. GAR 100001. THE NTU IS BASED UPON THE SITE ACREAGE OF 24.997 ACRES FOR THE PROJECT SITE, THE SURFACE WATER DRAINAGE AREA OF 0.05 SQUARE MILES, AND RECEIVING WATER WHICH SUPPORTS WARM WATER FISHERIES.

## SAMPLING FREQUENCY

STORM WATER SAMPLES SHALL BE TAKEN FOR THE FOLLOWING STORM EVENTS:

(1). THE PRIMARY PERMITTEE MUST SAMPLE IN ACCORDANCE WITH THE PLAN AT LEAST ONCE FOR EACH RAINFALL EVENT DESCRIBED BELOW FOR A QUALIFYING EVENT. THE PERMITTEE SHALL SAMPLE AT THE BEGINNING OF ANY STORM WATER DISCHARGE TO A MONITORED RECEIVING WATER AND/OR FROM A MONITORED OUTFALL LOCATION WITHIN FORTY-FIVE (45) MINUTES OR AS SOON AS POSSIBLE.

(2). HOWEVER, WHERE MANUAL AND AUTOMATIC SAMPLING ARE IMPOSSIBLE (AS DEFINED IN THIS PERMIT), OR ARE BEYOND THE PERMITTEE'S CONTROL, THEIR PERMITTEE SHALL TAKE SAMPLES AS SOON AS POSSIBLE, BUT IN NO CASE MORE THAN TWELVE (12) HOURS AFTER THE BEGINNING OF THE STORM WATER DISCHARGE.

(3). SAMPLING BY THE PERMITTEE SHALL OCCUR FOR THE FOLLOWING QUALIFYING EVENTS:

(A). FOR EACH AREA OF THE SITE THAT DISCHARGES TO A RECEIVING WATER OR FROM AN OUTFALL, THE FIRST RAIN EVENT THAT REACHES OR EXCEEDS 0.5 INCH WITH A STORM WATER DISCHARGE THAT OCCURS DURING NORMAL BUSINESS HOURS AS DEFINED IN THIS PERMIT AFTER ALL CLEARING AND GRUBBING OPERATIONS HAVE BEEN COMPLETED, BUT PRIOR TO COMPLETION OF MASS GRADING OPERATIONS, IN THE DRAINAGE AREA OF THE LOCATION SELECTED AS THE SAMPLING LOCATION,

(B). IN ADDITION TO (A) ABOVE, FOR EACH AREA OF THE SITE THAT DISCHARGES TO A RECEIVING WATER OR FROM AN OUTFALL. THE FIRST RAIN EVENT THAT REACHES OR EXCEEDS 0.5 INCH WITH A STORM WATER DISCHARGE THAT OCCURS DURING NORMAL BUSINESS HOURS AS DEFINED IN THIS PERMIT EITHER 90 DAYS AFTER THE FIRST SAMPLING EVENT OR AFTER ALL MASS GRADING OPERATIONS HAVE BEEN COMPLETED, BUT PRIOR TO SUBMITTAL OF A NOT, IN THE DRAINAGE AREA OF THE LOCATION SELECTED AS THE SAMPLING LOCATION, WHICHEVER COMES FIRST,

(C). AT THE TIME OF SAMPLING PERFORMED PURSUANT TO (A) AND (B) ABOVE, IF BMP's IN ANY AREA OF THE SITE THAT DISCHARGES TO A RECEIVING WATER OR FROM AN OUTFALL ARE NOT PROPERLY DESIGNED, INSTALLED AND MAINTAINED, CORRECTIVE ACTION SHALL BE DEFINED AND IMPLEMENTED WITHIN TWO (2) BUSINESS DAYS, AND TURBIDITY SAMPLES SHALL BE TAKEN FROM DISCHARGES FROM THAT AREA OF THE SITE FOR EACH SUBSEQUENT RAIN EVENT THAT REACHES OR EXCEEDS 0.5 INCH DURING NORMAL BUSINESS HOURS* UNTIL THE SELECTED TURBIDITY STANDARD IS ATTAINED, OR UNTIL POST-STORM EVENT INSPECTIONS DETERMINE THAT BMP's ARE PROPERLY DESIGNED, INSTALLED AND MAINTAINED,

(D). WHERE SAMPLING PURSUANT TO (A), (B), OR (C) ABOVE IS REQUIRED BUT NOT POSSIBLE (OR NOT REQUIRED BECAUSE THERE WAS NO DISCHARGE), THE PERMITTEE, IN ACCORDANCE WITH PART IV.D.4.a.(6), MUST INCLUDE A WRITTEN JUSTIFICATION IN THE INSPECTION REPORT OF WHY SAMPLING WAS NOT PERFORMED. PROVIDING THIS JUSTIFICATION DOES NOT RELIEVE THE PERMITTEE OF ANY SUBSEQUENT SAMPLING OBLIGATIONS UNDER (A), (B), OR (C) ABOVE, AND

(E). EXISTING CONSTRUCTION ACTIVITIES, I.E., THOSE THAT ARE OCCURRING ON OR BEFORE THE EFFECTIVE DATE OF THIS PERMIT, THAT HAVE MET THE SAMPLING REQUIRED BY (A) ABOVE SHALL SAMPLE IN ACCORDANCE WITH (B). THOSE EXISTING CONSTRUCTION ACTIVITIES THAT HAVE MET THE SAMPLING REQUIRED BY (B) ABOVE SHALL NOT BE REQUIRED TO CONDUCT ADDITIONAL SAMPLING OTHER THAN AS REQUIRED BY (C) ABOVE.

*NOTE THAT PERMITTEE MAY CHOOSE TO MEET THE REQUIREMENTS OF (A) AND (B) ABOVE BY COLLECTING TURBIDITY SAMPLES FROM ANY RAIN EVENT THAT REACHES OR EXCEEDS 0.5 INCH AND ALLOWS FOR SAMPLING AT ANY TIME OF THE DAY OR WEEK.

## NON-STORM WATER DISCHARGES

EXCEPT FOR FLOWS FROM FIRE FIGHTING ACTIVITIES, SOURCES OF NON-STORM WATER LISTED IN PART III.A.2. OF THIS PERMIT THAT ARE COMBINED WITH STORM WATER DISCHARGES ASSOCIATED WITH CONSTRUCTION ACTIVITY MUST BE IDENTIFIED IN THE PLAN. THE PLAN SHALL IDENTIFY AND ENSURE THE IMPLEMENTATION OF APPROPRIATE POLLUTION PREVENTION MEASURES FOR THE NON-STORM WATER COMPONENT(S) OF THE DISCHARGE.

## REPORTING

1. THE APPLICABLE PERMITTEE ARE REQUIRED TO SUBMIT THE SAMPLING RESULTS TO THE EPD AT THE ADDRESS SHOWN IN PART II.C. BY THE FIFTEENTH DAY OF THE MONTH FOLLOWING THE REPORTING PERIOD. REPORTING PERIODS ARE MONTHS DURING WHICH SAMPLES ARE TAKEN IN ACCORDANCE WITH THIS PERMIT. SAMPLING RESULTS SHALL BE IN A CLEARLY LEGIBLE FORMAT. UPON WRITTEN NOTIFICATION, EPD MAY REQUIRE THE APPLICABLE PERMITTEE TO SUBMIT THE SAMPLING RESULTS ON A MORE FREQUENT BASIS. SAMPLING AND ANALYSIS OF ANY STORM WATER DISCHARGE(S) OR THE RECEIVING WATER (S) BEYOND THE MINIMUM FREQUENCY STATED IN THIS PERMIT MUST BE REPORTED IN A SIMILAR MANNER TO THE EPD. THE SAMPLING REPORTS MUST BE SIGNED IN ACCORDANCE WITH PART V.G.2. SAMPLING REPORTS MUST BE SUBMITTED TO EPD USING THE ELECTRONIC SUBMITTAL SERVICE PROVIDED BY EPD. SAMPLING REPORTS MUST BE SUBMITTED TO EPD UNTIL SUCH TIME AS A NOT IS SUBMITTED IN ACCORDANCE WITH PART VI.

2. ALL SAMPLING REPORTS SHALL INCLUDE THE FOLLOWING INFORMATION:

A. THE RAINFALL AMOUNT, DATE, EXACT PLACE AND TIME OF SAMPLING MEASUREMENTS,
B. THE NAME(S) OF THE CERTIFIED PERSONNEL WHO PERFORMED THE SAMPLING AND MEASUREMENTS,
C. THE DATE(S) ANALYSES WERE PERFORMED,
D. THE TIME(S) ANALYSES WERE INITIATED,
E. THE NAME(S) OF THE CERTIFIED PERSONNEL WHO PERFORMED THE ANALYSES,
F. REFERENCES AND WRITTEN PROCEDURES, WHEN AVAILABLE, FOR THE ANALYTICAL TECHNIQUES OR METHODS USED,
G. THE RESULTS OF SUCH ANALYSES, INCLUDING THE BENCH SHEETS, INSTRUMENT READOUTS, COMPUTER DISKS OR TAPES, ETC., USED TO DETERMINE THESE RESULTS,
H. RESULTS WHICH EXCEED 1000 NTU SHALL BE REPORTED AS "EXCEEDS 1000 NTU," AND
I. CERTIFICATION STATEMENT THAT SAMPLING WAS CONDUCTED AS PER THE PLAN.

3. ALL WRITTEN CORRESPONDENCE REQUIRED BY THIS PERMIT SHALL BE SUBMITTED BY RETURN RECEIPT CERTIFIED MAIL (OR SIMILAR SERVICE) TO THE APPROPRIATE DISTRICT OFFICE OF THE EPD ACCORDING TO THE SCHEDULE IN APPENDIX A OF THIS PERMIT. THE PERMITTEE SHALL RETAIN A COPY OF THE PROOF OF SUBMITTAL AT THE CONSTRUCTION SITE OR THE PROOF OF SUBMITTAL SHALL BE READILY AVAILABLE AT A DESIGNATED LOCATION FROM COMMENCEMENT OF CONSTRUCTION UNTIL SUCH TIME AS A NOT IS SUBMITTED IN ACCORDANCE WITH PART VI.

EFFINGHAM COUNTY B.O.E. MAINTENANCE FACILITY
GUYTON GEORGIA
EFFINGHAM COUNTY BOARD OF EDUCATION

JAMES W. BUCKLEY & ASSOCIATES INC. - ARCHITECTS, CIVIL ENGINEERS
SWAINSBORO, ALBANY, ROME, AND SAVANNAH GEORGIA

SOIL EROSION AND SEDIMENTATION CONTROL NOTES

No. 36129
WILLIAM D. MARTIN
Will Martin
GSWCC LEVEL II
CERT.# 0000055308

Know what's below. Call before you dig.

ISSUED FOR
BID

GOG
DRAWN BY
CHECKED BY
WDM
APPROVED BY
12-20-2024
DATE
22-065
PROJECT NO.

SHEET NUMBER
SE0.0

J:\Effingham County Schools\22-065 Effingham County School Maintenance Facility\2 - Civil\DWG\BASE_10-22-2024.dwg, 12/19/2024 11:25:37 AM

## EROSION, SEDIMENTATION & POLLUTION CONTROL PLAN CHECKLIST
### STAND ALONE CONSTRUCTION PROJECTS

SWCD: XXXXXXXXXXX

PROJECT NAME:EFFINGHAM CO. B.O.E. MAINTENANCE FACILITY — ADDRESS: HODGEVILLE ROAD, GUYTON, GEORGIA 31312

CITY/COUNTY: GUYTON, EFFINGHAM — DATE ON PLANS: 12-20-2094

NAME & EMAIL OF PERSON FILLING OUT CHECKLIST: GERMAIN GALVADORES , GOG@JWBUCKLEY.COM

| PLAN PAGE # | INCLUDED Y/N | | |
|---|---|---|---|
| SE0.1 | Y | 1 | THE APPLICABLE EROSION, SEDIMENTATION AND POLLUTION CONTROL PLAN CHECKLIST ESTABLISHED BY THE COMMISSION AS OF JANUARY 1 OF THE YEAR IN WHICH THE LAND-DISTURBING ACTIVITY WAS PERMITTED. |
| ALL | Y | 2 | LEVEL II CERTIFICATION NUMBER ISSUED BY THE COMMISSION, SIGNATURE AND SEAL OF THE CERTIFIED DESIGN PROFESSIONAL. |
| | N/A | 3 | LIMITS OF DISTURBANCE SHALL BE NO GREATER THAN 50 ACRES AT ANY ONE TIME WITHOUT PRIOR WRITTEN AUTHORIZATION FROM THE GAEPD DISTRICT OFFICE. IF GAEPD APPROVES THE REQUEST TO DISTURB 50 ACRES OR MORE AT ANY ONE TIME, THE PLAN MUST INCLUDE AT LEAST 4 OF THE BMPS LISTED IN APPENDIX 1 OF THIS CHECKLIST AND THE GAEPD APPROVAL LETTER. * |
| SE0.0 | Y | 4 | THE NAME AND PHONE NUMBER OF THE 24-HOUR CONTACT RESPONSIBLE FOR EROSION, SEDIMENTATION AND POLLUTION CONTROLS. |
| SE0.0 | Y | 5 | PROVIDE THE NAME, ADDRESS, EMAIL ADDRESS, AND PHONE NUMBER OF PRIMARY PERMITTEE. |
| SE0.0 SE1.0 | Y | 6 | NOTE TOTAL AND DISTURBED ACREAGES OF THE PROJECT OR PHASE UNDER CONSTRUCTION. |
| SE1.0 SE1.1 | Y | 7 | PROVIDE THE GPS LOCATION OF THE CONSTRUCTION EXIT FOR THE SITE. GIVE THE LATITUDE AND LONGITUDE IN DECIMAL DEGREES. |
| ALL | Y | 8 | INITIAL DATE OF THE PLAN AND THE DATES OF ANY REVISIONS MADE TO THE PLAN INCLUDING THE ENTITY WHO REQUESTED THE REVISIONS. |
| SE0.1 | Y | 9 | DESCRIPTION OF THE NATURE OF CONSTRUCTION ACTIVITY AND EXISTING SITE CONDITIONS. |
| SE0.0 | Y | 10 | PROVIDE VICINITY MAP SHOWING SITE'S RELATION TO SURROUNDING AREAS. INCLUDE DESIGNATION OF SPECIFIC PHASE, IF NECESSARY. |
| SE0.0 | Y | 11 | IDENTIFY THE PROJECT RECEIVING WATERS AND DESCRIBE ALL SENSITIVE ADJACENT AREAS INCLUDING STREAMS, LAKES, RESIDENTIAL AREAS, WETLANDS, MARSHLANDS, ETC. WHICH MAY BE AFFECTED. |
| SE0.0 | Y | 12 | DESIGN PROFESSIONAL'S CERTIFICATION STATEMENT AND SIGNATURE THAT THE SITE WAS VISITED PRIOR TO DEVELOPMENT OF THE ES&PC PLAN AS STATED ON PART IV PAGE 19 OF THE PERMIT. |
| SE0.0 | Y | 13 | DESIGN PROFESSIONAL'S CERTIFICATION STATEMENT AND SIGNATURE THAT THE PERMITTEE'S ES&PC PLAN PROVIDES FOR AN APPROPRIATE AND COMPREHENSIVE SYSTEM OF BMPS AND SAMPLING TO MEET PERMIT REQUIREMENTS AS STATED ON PART IV PAGE 19 OF THE PERMIT. * |
| SE0.0 | Y | 14 | CLEARLY NOTE THE STATEMENT THAT "THE DESIGN PROFESSIONAL WHO PREPARED THE ES&PC PLAN IS TO INSPECT THE INSTALLATION OF THE INITIAL SEDIMENT STORAGE REQUIREMENTS AND PERIMETER CONTROL BMPS WITHIN 7 DAYS AFTER INSTALLATION." IN ACCORDANCE WITH PART IV PAGE 19 OF THE PERMIT |
| SE0.0 | Y | 15 | CLEARLY NOTE THE STATEMENT THAT "NON-EXEMPT ACTIVITIES SHALL NOT BE CONDUCTED WITHIN THE 25 OR 50-FOOT UNDISTURBED STREAM BUFFERS AS MEASURED FROM THE POINT OF WRESTED VEGETATION OR WITHIN 25-FEET OF THE COASTAL MARSHLAND BUFFER AS MEASURED FROM THE JURISDICTIONAL DETERMINATION LINE WITHOUT FIRST ACQUIRING THE NECESSARY VARIANCES AND PERMITS."* |
| | N/A | 16 | PROVIDE A DESCRIPTION OF ANY BUFFER ENCROACHMENTS AND INDICATE WHETHER A BUFFER VARIANCE IS REQUIRED. |
| SE0.0 | Y | 17 | CLEARLY NOTE THE STATEMENT THAT "AMENDMENTS/REVISIONS TO THE ES&PC PLAN WHICH HAVE A SIGNIFICANT EFFECT ON BMPS WITH A HYDRAULIC COMPONENT MUST BE CERTIFIED BY THE DESIGN PROFESSIONAL." * |
| SE0.0 | Y | 18 | CLEARLY NOTE THE STATEMENT THAT "WASTE MATERIALS SHALL NOT BE DISCHARGED TO WATERS OF THE STATE, EXCEPT AS AUTHORIZED BY A SECTION 404 PERMIT." * |
| SE0.0 | Y | 19 | CLEARLY NOTE STATEMENT THAT "THE ESCAPE OF SEDIMENT FROM THE SITE SHALL BE PREVENTED BY THE INSTALLATION OF EROSION AND SEDIMENT CONTROL MEASURES AND PRACTICES PRIOR TO LAND DISTURBING ACTIVITIES." |
| SE0.0 | Y | 20 | CLEARLY NOTE STATEMENT THAT "EROSION CONTROL MEASURES WILL BE MAINTAINED AT ALL TIMES. IF FULL IMPLEMENTATION OF THE APPROVED PLAN DOES NOT PROVIDE FOR EFFECTIVE EROSION CONTROL, ADDITIONAL EROSION AND SEDIMENT CONTROL MEASURES SHALL BE IMPLEMENTED TO CONTROL OR TREAT THE SEDIMENT SOURCE." |
| SE0.0 | Y | 21 | CLEARLY NOTE THE STATEMENT "ANY DISTURBED AREA LEFT EXPOSED FOR A PERIOD GREATER THAN 14 DAYS SHALL BE STABILIZED WITH MULCH OR TEMPORARY SEEDING." |
| SE0.0 | Y | 22 | ANY CONSTRUCTION ACTIVITY WHICH DISCHARGES STORM WATER INTO AN IMPAIRED STREAM SEGMENT, OR WITHIN 1 LINEAR MILE UPSTREAM OF AND WITHIN THE SAME WATERSHED AS, ANY PORTION OF A BIOTA IMPAIRED STREAM SEGMENT MUST COMPLY WITH PART III. C. OF THE PERMIT. INCLUDE THE COMPLETED APPENDIX 1 LISTING ALL THE BMPS THAT WILL BE USED FOR THOSE AREAS OF THE SITE WHICH DISCHARGE TO THE IMPAIRED STREAM SEGMENT. * |
| SE0.0 | Y | 23 | IF A TMDL IMPLEMENTATION PLAN FOR SEDIMENT HAS BEEN FINALIZED FOR THE IMPAIRED STREAM SEGMENT (IDENTIFIED INITEM 22 ABOVE) AT LEAST SIX MONTHS PRIOR TO SUBMITTAL OF NOI, THE ES&PC PLAN MUST ADDRESS ANY SITE-SPECIFIC CONDITIONS OR REQUIREMENTS INCLUDED IN THE TMDL IMPLEMENTATION PLAN. * |
| SE0.0 SE1.0 SE1.1 | Y | 24 | BMPS FOR CONCRETE WASHDOWN OF TOOLS, CONCRETE MIXER CHUTES, HOPPERS AND THE REAR OF THE VEHICLES. WASHOUT OF THE DRUM AT THE CONSTRUCTION SITE IS PROHIBITED. * |
| SE0.0 SE1.0 | Y | 25 | PROVIDE BMPS FOR THE REMEDIATION OF ALL PETROLEUM SPILLS AND LEAKS. |
| SE0.0 | Y | 26 | DESCRIPTION OF THE MEASURES THAT WILL BE INSTALLED DURING THE CONSTRUCTION PROCESS TO CONTROL POLLUTANTS IN STORM WATER THAT WILL OCCUR AFTER CONSTRUCTION OPERATIONS HAVE BEEN COMPLETED. * |
| SE1.0 SE1.1 SE1.2 | Y | 27 | DESCRIPTION OF PRACTICES TO PROVIDE COVER FOR BUILDING MATERIALS AND BUILDING PRODUCTS ON SITE. * |
| SE0.0 | Y | 28 | DESCRIPTION OF THE PRACTICES THAT WILL BE USED TO REDUCE THE POLLUTANTS IN STORM WATER DISCHARGES. * |
| SE0.1 | Y | 29 | DESCRIPTION AND CHART OR TIMELINE OF THE INTENDED SEQUENCE OF MAJOR ACTIVITIES WHICH DISTURB SOILS FOR THE MAJOR PORTIONS OF THE SITE (I.E., INITIAL PERIMETER AND SEDIMENT STORAGE BMPS, CLEARING AND GRUBBING ACTIVITIES, EXCAVATION ACTIVITIES, UTILITY ACTIVITIES, TEMPORARY AND FINAL STABILIZATION). |
| SE0.0 | Y | 30 | PROVIDE COMPLETE REQUIREMENTS OF INSPECTIONS AND RECORD KEEPING BY THE PRIMARY PERMITTEE. * |
| SE0.0 | Y | 31 | PROVIDE COMPLETE REQUIREMENTS OF SAMPLING FREQUENCY AND REPORTING OF SAMPLING RESULTS. * |
| SE0.0 | Y | 32 | PROVIDE COMPLETE DETAILS FOR RETENTION OF RECORDS AS PER PART IV.F. OF THE PERMIT. * |
| SE0.0 | Y | 33 | DESCRIPTION OF ANALYTICAL METHODS TO BE USED TO COLLECT AND ANALYZE THE SAMPLES FROM EACH LOCATION.* |
| SE0.0 | Y | 34 | APPENDIX B RATIONALE FOR NTU VALUES AT ALL OUTFALL SAMPLING POINTS WHERE APPLICABLE. * |
| SE1.0 SE1.1 SE1.2 | Y | 35 | DELINEATE ALL SAMPLING LOCATIONS, PERENNIAL AND INTERMITTENT STREAMS AND OTHER WATER BODIES INTO WHICH STORM WATER IS DISCHARGED. * |
| SE0.0 | Y | 36 | A DESCRIPTION OF APPROPRIATE CONTROLS AND MEASURES THAT WILL BE IMPLEMENTED AT THE CONSTRUCTION SITE INCLUDING:(1) INITIAL SEDIMENT STORAGE REQUIREMENTS AND PERIMETER CONTROL BMPS, (2) INTERMEDIATE GRADING AND DRAINAGE BMPS, AND (3) FINAL BMPS. FOR CONSTRUCTION SITES WHERE THERE WILL BE NO MASS GRADING AND THE INITIAL PERIMETER CONTROL BMPS, INTERMEDIATE GRADING AND DRAINAGE BMPS, AND FINAL BMPS ARE THE SAME, THE PLAN MAY COMBINE ALL OF THE BMPS INTO A SINGLE PHASE. * |
| SE1.0 SE1.1 SE1.2 | Y | 37 | GRAPHIC SCALE AND NORTH ARROW. |
| SE1.0 SE1.1 SE1.2 | Y | 38 | EXISTING AND PROPOSED CONTOUR LINES WITH CONTOUR LINES DRAWN AT AN INTERVAL IN ACCORDANCE WITH THE FOLLOWING:<br>MAP SCALE — GROUND SLOPE — CONTOUR INTERVALS, FT.<br>1 INCH = 100FT OR LARGER SCALE — FLAT 0 - 2% — 0.5 OR 1<br>ROLLING 2 - 6% — 1 OR 2<br>STEEP 6% + — 2,5 OR 10 |
| | N/A | 39 | USE OF ALTERNATIVE BMPS WHOSE PERFORMANCE HAS BEEN DOCUMENTED TO BE EQUIVALENT TO OR SUPERIOR TO CONVENTIONAL BMPS AS CERTIFIED BY A DESIGN PROFESSIONAL (UNLESS DISAPPROVED BY GAEPD OR THE GEORGIA SOIL AND WATER CONSERVATION COMMISSION). PLEASE REFER TO THE ALTERNATIVE BMP GUIDANCE DOCUMENT FOUND AT WWW.GASWCC.GEORGIA.GOV. |
| | N/A | 40 | USE OF ALTERNATIVE BMP FOR APPLICATION TO THE EQUIVALENT BMP LIST. PLEASE REFER TO APPENDIX A-2 OF THE MANUAL FOR EROSION & SEDIMENT CONTROL IN GEORGIA 2016 EDITION. * |
| ALL | Y | 41 | DELINEATION OF THE APPLICABLE 25-FOOT OR 50-FOOT UNDISTURBED BUFFERS ADJACENT TO STATE WATERS AND ANY ADDITIONAL BUFFERS REQUIRED BY THE LOCAL ISSUING AUTHORITY. CLEARLY NOTE AND DELINEATE ALL AREAS OF IMPACT. |
| SE1.0 | Y | 42 | DELINEATION OF ON-SITE WETLANDS AND ALL STATE WATERS LOCATED ON AND WITHIN 200 FEET OF THE PROJECT SITE. |
| HYDRO | Y | 43 | DELINEATION AND ACREAGE OF CONTRIBUTING DRAINAGE BASINS ON THE PROJECT SITE. |
| HYDRO | Y | 44 | PROVIDE HYDROLOGY STUDY AND MAPS OF DRAINAGE BASINS FOR BOTH THE PRE- AND POST-DEVELOPED CONDITIONS. * |
| HYDRO | Y | 45 | AN ESTIMATE OF THE RUNOFF COEFFICIENT OR PEAK DISCHARGE FLOW OF THE SITE PRIOR TO AND AFTER CONSTRUCTION ACTIVITIES ARE COMPLETED. |
| SE2.0 | Y | 46 | STORM-DRAIN PIPE AND WEIR VELOCITIES WITH APPROPRIATE OUTLET PROTECTION TO ACCOMMODATE DISCHARGES WITHOUT EROSION. IDENTIFY/DELINEATE ALL STORM WATER DISCHARGE POINTS. |
| SE0.1 | Y | 47 | SOIL SERIES FOR THE PROJECT SITE AND THEIR DELINEATION. |
| ALL | Y | 48 | THE LIMITS OF DISTURBANCE FOR EACH PHASE OF CONSTRUCTION. |
| ALL | Y | 49 | PROVIDE A MINIMUM OF 67 CUBIC YARDS OF SEDIMENT STORAGE PER ACRE DRAINED USING A TEMPORARY SEDIMENT BASIN, RETROFITTED DETENTION POND, AND/OR EXCAVATED INLET SEDIMENT TRAPS FOR EACH COMMON DRAINAGE LOCATION. SEDIMENT STORAGE VOLUME MUST BE IN PLACE PRIOR TO AND DURING ALL LAND DISTURBANCE ACTIVITIES UNTIL FINAL STABILIZATION OF THE SITE HAS BEEN ACHIEVED. A WRITTEN JUSTIFICATION EXPLAINING THE DECISION TO USE EQUIVALENT CONTROLS WHEN A SEDIMENT BASIN IS NOT ATTAINABLE MUST BE INCLUDED IN THE PLAN FOR EACH COMMON DRAINAGE LOCATION IN WHICH A SEDIMENT BASIN IS NOT PROVIDED. A WRITTEN JUSTIFICATION AS TO WHY 67 CUBIC YARDS OF STORAGE IS NOT ATTAINABLE MUST ALSO BE GIVEN. WORKSHEETS FROM THE MANUAL INCLUDED FOR STRUCTURAL BMPS AND ALL CALCULATIONS USED BY THE STORAGE DESIGN PROFESSIONAL TO OBTAIN THE REQUIRED SEDIMENT WHEN USING EQUIVALENT CONTROLS. WHEN DISCHARGING FROM SEDIMENT BASINS AND IMPOUNDMENTS, PERMITTEES ARE REQUIRED TO UTILIZE OUTLET STRUCTURES THAT WITHDRAW WATER FROM THE SURFACE, UNLESS INFEASIBLE. IF OUTLET STRUCTURES THAT WITHDRAW WATER FROM THE SURFACE ARE NOT FEASIBLE,A WRITTEN JUSTIFICATION EXPLAINING THIS DECISION MUST BE INCLUDED IN THE PLAN. |
| ALL | Y | 50 | LOCATION OF BEST MANAGEMENT PRACTICES THAT ARE CONSISTENT WITH AND NO LESS STRINGENT THAN THE MANUAL FOR EROSION AND SEDIMENT CONTROL IN GEORGIA. USE UNIFORM CODING SYMBOLS FROM THE MANUAL, CHAPTER 6, WITH LEGEND. |
| ALL | Y | 51 | PROVIDE DETAILED DRAWINGS FOR ALL STRUCTURAL PRACTICES. SPECIFICATIONS MUST, AT A MINIMUM, MEET THE GUIDELINES SET FORTH IN THE MANUAL FOR EROSION AND SEDIMENT CONTROL IN GEORGIA. |
| ALL | Y | 52 | PROVIDE VEGETATIVE PLAN, NOTING ALL TEMPORARY AND PERMANENT VEGETATIVE PRACTICES. INCLUDE SPECIES, PLANTING DATES AND SEEDING, FERTILIZER, LIME AND MULCHING RATES. VEGETATIVE PLAN SHALL BE SITE SPECIFIC FOR APPROPRIATE TIME OF THE YEAR THAT SEEDING WILL TAKE PLACE AND FOR THE APPROPRIATE GEOGRAPHIC REGION OF GEORGIA. |

* IF USING THIS CHECKLIST FOR A PROJECT THAT IS LESS THAN 1 ACRE AND NOT PART OF A COMMON DEVELOPMENT BUT WITHIN 200 FT OF A PERENNIAL STREAM, THE * CHECKLIST ITEMS WOULD BE N/A.

EFFECTIVE JANUARY 1, 2024

## FERTILIZER REQUIREMENTS FOR TEMPORARY VEGETATION

| TYPES OF SPECIES | PLANTING YEAR | FERTILIZER (N-P-K) | RATE (lbs/acre) | N TOP DRESSING RATE (lbs/acre) |
|---|---|---|---|---|
| COOL SEASON GRASSES | FIRST | 6-12-12 | 1500 | 50-100 |
| | SECOND | 6-12-12 | 1000 | --- |
| | MAINTENANCE | 10-10-10 | 400 | 30 |
| COOL SEASON GRASSES & LEGUMES | FIRST | 6-12-12 | 1500 | 0-50 |
| | SECOND | 0-10-10 | 1000 | --- |
| | MAINTENANCE | 0-10-10 | 400 | --- |
| TEMP. COVER CROPS | FIRST | 10-10-10 | 500 | 30 |
| WARM SEASON GRASSES | FIRST | 6-12-12 | 1500 | 50-100 |
| | SECOND | 6-12-12 | 800 | 50-100 |
| | MAINTENANCE | 10-10-10 | 400 | 30 |

## GRADED RIP-RAP STONE

| FLOW VELOCITY (ft/sec) | N.S.A. *1 | SIZE INCHES (SQ. OPENING) MAX | AVG | MIN | PARTICLE WEIGHT (lbs.) *2 |
|---|---|---|---|---|---|
| 2.5 | R-1 | 1 1/2 | 3/4 | NO.8 | -- |
| 4.5 | R-2 | 3 | 11/2 | 1 | -- |
| 6.5 | R-3 | 6 | 3 | 2 | 20 |
| 9.0 | R-4 | 12 | 6 | 3 | 600 |
| 11.5 | R-5 | 18 | 9 | 5 | 150 |
| 13.0 | R-6 | 24 | 12 | 7 | 3000 |
| 14.5 | R-7 | 30 | 15 | 12 | 7000 |
| -- | R-8 | 48 | 24 | 15 | 15000 |

*1. NATIONAL STONE ASSOCIATION
*2. AT LEAST 50% OF ALL THE INDIVIDUAL STONE PARTICLES MUST WEIGH AT LEAST THE LISTED AMOUNT.

## SOIL EROSION CONTROL ACTIVITY SCHEDULE

| ACTIVITY | MONTHS 1 | 2 | 3 | 4 | 5 | 6 | 7 | 8 | 9 | 10 | 11 | 12 |
|---|---|---|---|---|---|---|---|---|---|---|---|---|
| EROSION CONTROL IMPLEMENTATION | | | | | | | | | | | | |
| INSTALLATION OF SILT FENCE & CONSTRUCTION EXIT | | | | | | | | | | | | |
| CLEARING, GRUBBING, GRADING, & EXCAVATION | | | | | | | | | | | | |
| TEMPORARY GRASSING (Ds1, Ds2) | | | | | | | | | | | | |
| DUST CONTROL | | | | | | | | | | | | |
| FINAL STABILIZATION (Ds3), (Ds4) | | | | | | | | | | | | |
| MAINTENANCE OF BMP's | | | | | | | | | | | | |
| REMOVAL OF ALL TEMPORARY BMPs | | | | | | | | | | | | |

NOTE: THIS IS A GENERAL CONSTRUCTION SCHEDULE FOR EROSION AND SEDIMENTATION CONTROL. CONTRACTOR SHALL CREATE A JOB SPECIFIC SCHEDULE.

## ACTIVITY SCHEDULE:

**INITIAL PHASE:**
-INSTALLATION OF CONSTRUCTION EXIT/ ENTRANCE
-INSTALLATION OF SILT FENCE AND ANY OTHER BMPs SHOWN ON PLAN
-DUST CONTROL FOR DISTURBED AREAS.
-INSTALLATION OF TEMPORARY GRASSING (Ds1, Ds2) IN ALL DISTURBED AREAS.
-INSTALLATION OF TEMPORARY SEDIMENT BASINS

**INTERMEDIATE PHASE:**
-MAINTENANCE OF ALL BMPs FROM INITIAL PHASE
-INSTALLATION OF ALL TEMPORARY GRASSING (Ds1, Ds2) BEYOND LIMITS SHOWN IN INITIAL PHASE AND WITHIN NEW LIMITS SHOWN IN INTERMEDIATE PHASE
-DUST CONTROL FOR DISTURBED AREAS.
-CLEARING AND GRUBBING
-GRADING ACTIVITIES
-INSTALLATION OF Sd2-F AND OTHER BMPs SHOWN ON SHEETS SE1.1 AND SE1.1b.

**FINAL PHASE:**
-MAINTENANCE OF ALL BMPs FROM PREVIOUS TWO STAGES -INSTALLATION OF ARTIFICAL
-ALL TEMPORARY BMPs ARE TO BE REMOVED ONCE FINAL STABILIZATION IS ACHIEVED.
-PERMANENT GRASSING TO BE INSTALLED

## ADDITIONAL EROSION ITEMS

| ITEM | SYMBOL | QUANTITY |
|---|---|---|
| TYPE S-SILT FENCE | Sd1-S | 2000 L.F. |
| TYPE NS-SILT FENCE | Sd1-NS | --- |
| TEMPORARY CONSTRUCTION EXIT | Co | 100 TONS |
| RIP RAP | St | 200 TONS |
| HAYBALES | Cd-Hb | 5 EACH |
| EROSION MAT | Se | 1,000 SQ. FT. |
| TEMPORARY SEDIMENT FILTER TRAP (FILTER FABR.) | Sd2-F | 5 EACH |
| TEMPORARY SEDIMENT FILTER TRAP (FILTER FABR.) | Sd2-FP | --- |
| | | |
| | | |
| | | |
| | | |
| | | |
| | | |
| | | |

## NOTE (ADD. ESC ITEMS):

CONTRACTOR TO PROVIDE THE FOLLOWING MATERIALS IN ADDITION TO THOSE SPECIFIED ON THE DRAWINGS TO BE INSTALLED AS DIRECTED BY CIVIL ENGINEER FOR THE PROJECT. THIS ADDITIONAL MATERIAL SHALL NOT BE USED FOR GENERAL MAINTENANCE. AT LEAST 10% OF THE QUANTITY SHALL BE READILY AVAILABLE ON SITE. THE QUANTITIES TO BE SUPPLIED ARE AS FOLLOWS:


LEGEND: LnA = LEON SAND, 0 TO 2 PERCENT SLOPES

## SOILS MAP
NOT TO SCALE

## GEORGIA UNIFORM CODING SYSTEM

### STRUCTURAL PRACTICES

| CODE | PRACTICE | DETAIL | MAP SYMBOL | DESCRIPTION |
|---|---|---|---|---|
| Cd | CHECKDAM | | | A small temporary barrier or dam constructed across a swale, drainage ditch or area of concentrated flow. |
| Ch | CHANNEL STABILIZATION | | | Improving, constructing or stabilizing an open channel, existing stream, or ditch. |
| Co | CONSTRUCTION EXIT | | (LABEL) | A crushed stone pad located at the construction site exit to provide a place for removing mud from tires thereby protecting public streets. |
| Cr | CONSTRUCTION ROAD STABILIZATION | | (LABEL) | A travelway constructed as part of a construction plan including access roads, subdivision roads, parking areas and other on-site vehicle transportation routes. |
| Dc | STREAM DIVERSION CHANNEL | | | A temporary channel constructed to convey flow around a construction site while a permanent structure is being constructed. |
| Di | DIVERSION | | | An earth channel or dike located above, below, or across a slope to divert runoff. This may be a temporary or permanent structure. |
| Dn1 | TEMPORARY DOWNDRAIN STRUCTURE | | (SIZE) (LABEL) | A flexible conduit of heavy-duty fabric or other material designed to safely conduct surface runoff down a slope. This is temporary and inexpensive. |
| Dn2 | PERMANENT DOWNDRAIN STRUCTURE | | (SIZE) (LABEL) | A paved chute, pipe, sectional conduit or similar material designed to safely conduct surface runoff down a slope. |
| Fr | FILTER RING | | | A temporary stone barrier constructed at storm drain inlets and pond outlets. |
| Ga | GABION | | | Rock filter baskets which are hand-placed into position forming soil stabilizing structures. |
| Gr | GRADE STABILIZATION STRUCTURE | | (SIZE) (LABEL) | Permanent structures installed to protect channels or waterways where otherwise the slope would be sufficient for the running water to form gullies. |
| Lv | LEVEL SPREADER | | | A stone flow outlet device constructed at zero grade across the slope whereby concentrated runoff may be discharged at a non-erosive velocity onto undisturbed areas stabilized by existing vegetation. |
| Rd | ROCK FILTER DAM | | | A temporary stone filter dam installed across drainageways or in conjunction with a temporary sediment trap. |
| Re | RETAINING WALL | | (SIZE) (LABEL) | A wall installed to stabilize cut and fill slopes where maximum permissible slopes are not obtainable. Each situation will require special design. |
| Rt | RETRO FITTING | | (SIZE) (LABEL) | A device or structure placed in front of a permanent stormwater detention pond outlet structure to serve as a temporary sediment filter. |
| Sd1 | SEDIMENT BARRIER | | (INDICATE TYPE) | A barrier to prevent sediment from leaving the construction site. It may be sandbags, bales of straw or hay, brush, logs and poles, or a silt fence. |
| Sd2 | INLET SEDIMENT TRAP | | | A temporary protective device formed at or around an inlet to a storm drain to trap sediment. |
| Sd3 | TEMPORARY SEDIMENT BASIN | | (SIZE) (LABEL) | A basin created by excavation or a dam across a waterway. The surface water runoff is temporarily stored allowing the bulk of the sediment to drop out. |
| Sd4 | TEMPORARY SEDIMENT TRAP | | | A small temporary pond that drains a disturbed area so that sediment can settle out. The principle feature distinguishing a temporary sediment trap from a temporary sediment basin is the lack of a pipe or riser. |
| Sk | FLOATING SURFACE SKIMMER | | (SIZE) (LABEL) | A buoyant device that releases/drains water from the surface of sediment ponds, traps, or basins at a controlled rate of flow. |
| Spb | SEEP BERM | | (SIZE) (LABEL) | Linear control device constructed as a diversion perpendicular to the direction of runoff to enhance dissipation and infiltration, while creating multiple sedimentation chambers with the employment of intermediate dikes. |

### STRUCTURAL PRACTICES

| CODE | PRACTICE | DETAIL | MAP SYMBOL | DESCRIPTION |
|---|---|---|---|---|
| Sr | TEMPORARY STREAM CROSSING | | (SIZE) (LABEL) | A temporary bridge or culvert-type structure protecting a stream or watercourse from damage by crossing construction equipment. |
| St | STORMDRAIN OUTLET PROTECTION | | (SIZE) (LABEL) | A paved or short section of riprap channel at the outlet of a storm drain system preventing erosion from the concentrated runoff. |
| Su | SURFACE ROUGHENING | | (SIZE) | A rough soil surface with horizontal depressions on a contour or slopes left in a roughened condition after grading. |
| Tc | TURBIDITY CURTAIN | | (SIZE) | A floating or staked barrier installed within the water (it may also be referred to as a floating boom, silt barrier, or silt curtain). |
| Tp | TOPSOILING | | (SIZE) (BACK STRIPPED AND STORAGE AREA) | The practice of stripping off the more fertile soil, storing it, then spreading it over the disturbed area after completion of construction activities. |
| Tr | TREE PROTECTION | | (SIZE) (STRINGTE TREE CENTERING) | To protect desirable trees from injury during construction activity. |
| Wt | VEGETATED WATERWAY OR STORMWATER CONVEYANCE CHANNEL | | (SIZE) | Paved or vegetative water outlets for diversions, terraces, berms, dikes or similar structures. |

### VEGETATIVE PRACTICES

| CODE | PRACTICE | DETAIL | MAP SYMBOL | DESCRIPTION |
|---|---|---|---|---|
| Bf | BUFFER ZONE | | (SIZE) (LABEL) | Strip of undisturbed original vegetation, enhanced or restored existing vegetation or the reestablishment of vegetation surrounding an area of disturbance or bordering streams. |
| Cs | COASTAL DUNE STABILIZATION (WITH VEGETATION) | | Cs | Planting vegetation on dunes that are denuded, artificially constructed, or re-nourished. |
| Ds1 | DISTURBED AREA STABILIZATION (WITH MULCHING ONLY) | | Ds1 | Establishing temporary protection for disturbed areas where seedlings may not have a suitable growing season to produce an erosion retarding cover. |
| Ds2 | DISTURBED AREA STABILIZATION (WITH TEMP SEEDING) | | Ds2 | Establishing a temporary vegetative cover with fast growing seedlings on disturbed areas. |
| Ds3 | DISTURBED AREA STABILIZATION (WITH PERM SEEDING) | | Ds3 | Establishing a permanent vegetative cover such as trees, shrubs, vines, grasses, or legumes on disturbed areas. |
| Ds4 | DISTURBED AREA STABILIZATION (SODDING) | | Ds4 | A permanent vegetative cover using sods on highly erodable or critically eroded lands. |
| Du | DUST CONTROL ON DISTURBED AREAS | | Du | Controlling surface and air movement of dust on construction site, roadways and similar sites. |
| Fl-Co | FLOCCULANTS AND COAGULANTS | | Fl-Co | Substance formulated to assist in the solids/liquid separation of suspended particles in solution. |
| Sb | STREAMBANK STABILIZATION (USING PERM VEGETATION) | | Sb | The use of readily available native plant materials to maintain and enhance streambanks or to prevent, or restore and repair small streambank erosion problems. |
| Ss | SLOPE STABILIZATION | | Ss | A protective covering used to prevent erosion and establish temporary or permanent vegetation on steep slopes, shore lines, or channels. |
| Tac | TACKIERS AND BINDERS | | Tac | Substance used to anchor straw or hay mulch by causing the organic material to bind together. |

GaSWCC (Amended - 2016)

# EFFINGHAM COUNTY B.O.E. MAINTENANCE FACILITY
GUYTON — EFFINGHAM COUNTY BOARD OF EDUCATION — GEORGIA

JAMES W. BUCKLEY & ASSOCIATES INC. - ARCHITECTS, CIVIL ENGINEERS
SVANNSBORO, ALBANY, ROME, AND SAVANNAH — GEORGIA

## SOIL EROSION AND SEDIMENTATION AND CONTROL NOTES AND DETAILS



GEORGIA REGISTERED No. 36129 PROFESSIONAL ENGINEER WILLIAM D. MARTIN
GSWCC LEVEL II CERT # 0000006308

811 Know what's below. Call before you dig.

ISSUED FOR: BID
GOG — DRAWN BY
CHECKED BY: WDM
APPROVED BY: 12-20-2024
DATE
22-065 — PROJECT NO.
SHEET NUMBER
SE0.1



J:\Effingham County Schools\22-065 Effingham County School Maintenance Facility\2. CAD\EFFINGHAM.CIVIL, 10-23-2024.dwg, 12/19/2024 11:26:53 AM

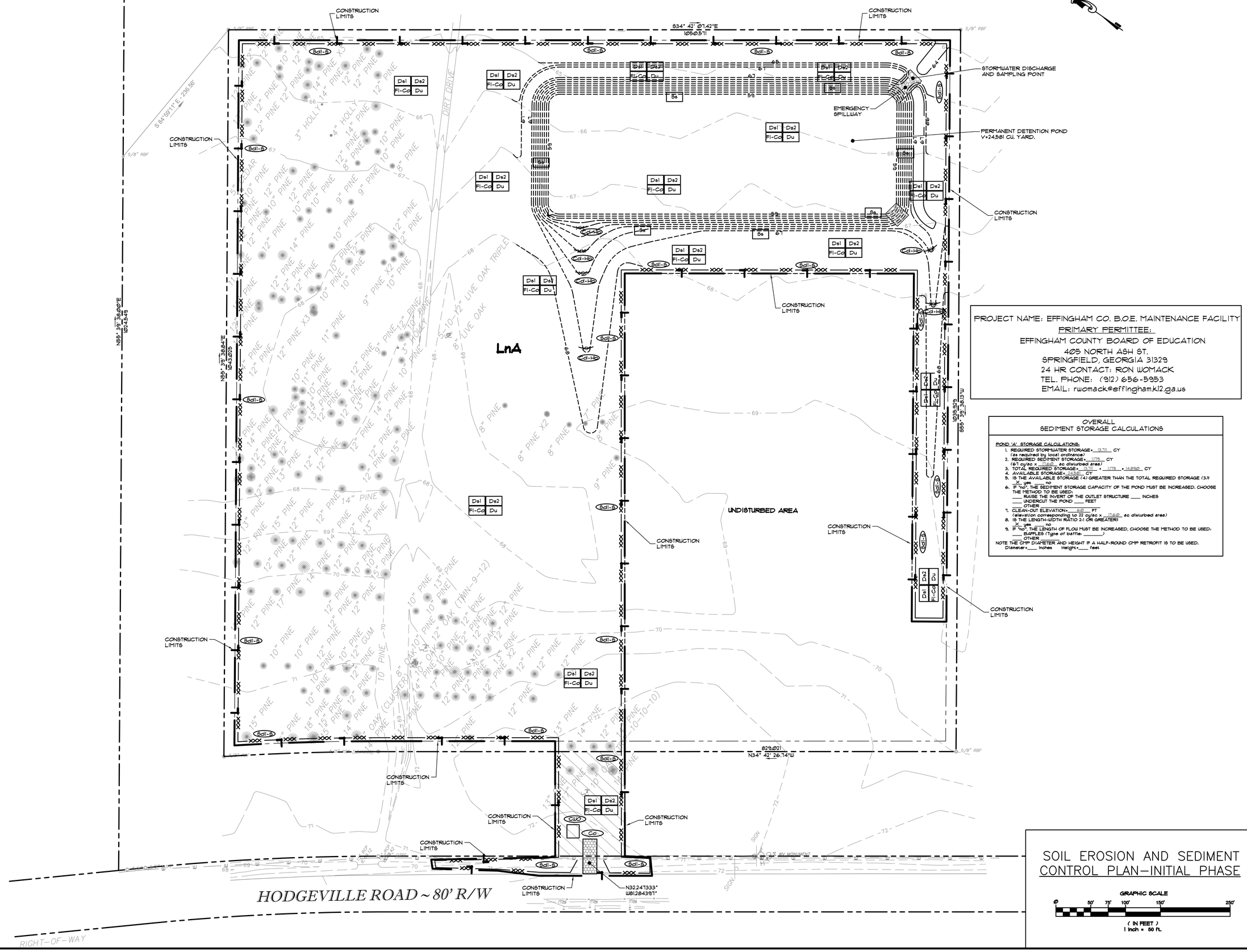


PROJECT NAME: EFFINGHAM CO. B.O.E. MAINTENANCE FACILITY
PRIMARY PERMITTEE:
EFFINGHAM COUNTY BOARD OF EDUCATION
405 NORTH ASH ST.
SPRINGFIELD, GEORGIA 31329
24 HR CONTACT: RON WOMACK
TEL. PHONE: (912) 656-5953
EMAIL: rwomack@effingham.k12.ga.us

OVERALL
SEDIMENT STORAGE CALCULATIONS

POND 'A' STORAGE CALCULATIONS:

1. REQUIRED STORMWATER STORAGE= 13,711 CY
   (as required by local ordinance)
2. REQUIRED SEDIMENT STORAGE= 1,175 CY
   (67 cy/ac x 17.62 ac disturbed area)
3. TOTAL REQUIRED STORAGE= 13,711 + 1,175 = 14,886 CY
4. AVAILABLE STORAGE= 24,581 CY
5. IS THE AVAILABLE STORAGE (4) GREATER THAN THE TOTAL REQUIRED STORAGE (3)?
   X yes ___ no
6. IF "no", THE SEDIMENT STORAGE CAPACITY OF THE POND MUST BE INCREASED. CHOOSE THE METHOD TO BE USED:
   ___ RAISE THE INVERT OF THE OUTLET STRUCTURE ___ INCHES
   ___ UNDERCUT THE POND ___ FEET
   ___ OTHER
7. CLEAN-OUT ELEVATION= 69 FT
   (elevation corresponding to 22 cy/ac x 17.62 ac disturbed area)
8. IS THE LENGTH-WIDTH RATIO 2:1 OR GREATER?
   X yes ___ no
9. IF "no", THE LENGTH OF FLOW MUST BE INCREASED. CHOOSE THE METHOD TO BE USED:
   ___ BAFFLES (Type of baffle: _____)
   ___ OTHER

NOTE THE CMP DIAMETER AND HEIGHT IF A HALF-ROUND CMP RETROFIT IS TO BE USED.
Diameter= ___ inches Height= ___ feet

# SOIL EROSION AND SEDIMENT CONTROL PLAN–INITIAL PHASE

EFFINGHAM COUNTY B.O.E. MAINTENANCE FACILITY
GUYTON
EFFINGHAM COUNTY BOARD OF EDUCATION
GEORGIA

JAMES W. BUCKLEY & ASSOCIATES INC. - ARCHITECTS, CIVIL ENGINEERS
SVANNSBORO, ALBANY, ROME, AND SAVANNAH
GEORGIA

SOIL EROSION AND SEDIMENT CONTROL PLAN-INITIAL PHASE



GEORGIA REGISTERED No. 36128 PROFESSIONAL ENGINEER WILLIAM D. MARTIN
GSWCC LEVEL II CERT # 0000056308

811 Know what's below. Call before you dig.

ISSUED FOR: BID
DRAWN BY: GOG
CHECKED BY: WDM
APPROVED BY: WDM
DATE: 12-20-2024
PROJECT NO: 22-065
SHEET NUMBER: SE1.0



J:\Effingham County Schools\22-065 Effingham County School Maintenance Facility\C - Civil\TWO\SESC_10-22-2024.dwg, 12/19/2024 4:19:52 PM

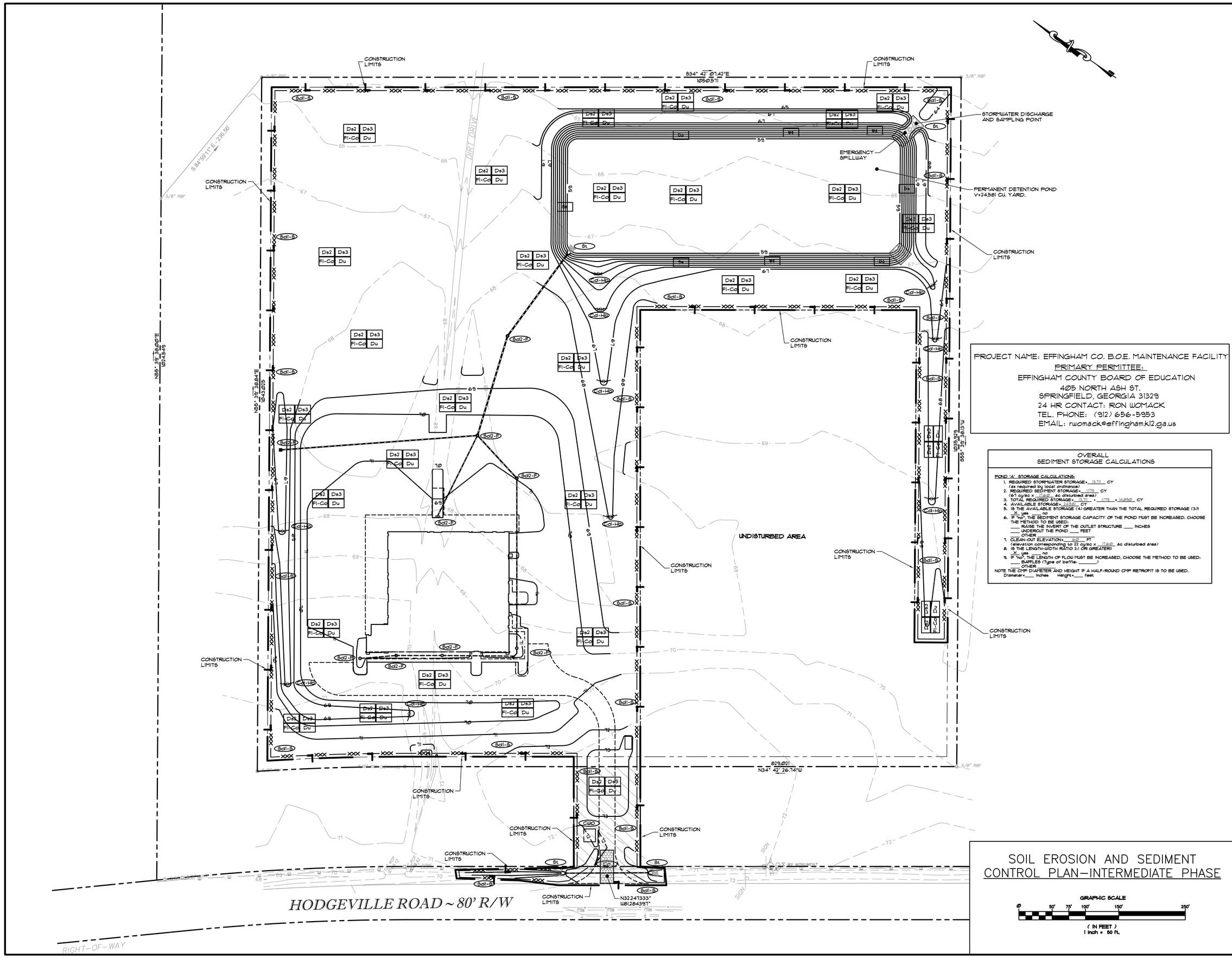


PROJECT NAME: EFFINGHAM CO. B.O.E. MAINTENANCE FACILITY

PRIMARY PERMITTEE:

EFFINGHAM COUNTY BOARD OF EDUCATION
405 NORTH ASH ST.
SPRINGFIELD, GEORGIA 31329
24 HR CONTACT: RON WOMACK
TEL. PHONE: (912) 656-5953
EMAIL: rwomack@effingham.k12.ga.us

## OVERALL SEDIMENT STORAGE CALCULATIONS

POND 'A' STORAGE CALCULATIONS:

1. REQUIRED STORMWATER STORAGE= 13,711 CY
   (as required by local ordinance)
2. REQUIRED SEDIMENT STORAGE= 1,179 CY
   (67 cy/ac x 17.60 ac disturbed area)
3. TOTAL REQUIRED STORAGE= 13,711 + 1,179 = 14,890 CY
4. AVAILABLE STORAGE= 24,581 CY
5. IS THE AVAILABLE STORAGE (4) GREATER THAN THE TOTAL REQUIRED STORAGE (3)?
   X yes ___ no
6. IF "no", THE SEDIMENT STORAGE CAPACITY OF THE POND MUST BE INCREASED. CHOOSE THE METHOD TO BE USED:
   ___ RAISE THE INVERT OF THE OUTLET STRUCTURE ___ INCHES
   ___ UNDERCUT THE POND ___ FEET
   ___ OTHER ___
7. CLEAN-OUT ELEVATION= 60 FT
   (elevation corresponding to 22 cy/ac x 17.60 ac disturbed area)
8. IS THE LENGTH-WIDTH RATIO 2:1 OR GREATER?
   X yes ___ no
9. IF "no", THE LENGTH OF FLOW MUST BE INCREASED, CHOOSE THE METHOD TO BE USED:
   ___ BAFFLES (Type of baffle: _____)
   ___ OTHER ___

NOTE THE CMP DIAMETER AND HEIGHT IF A HALF-ROUND CMP RETROFIT IS TO BE USED.
Diameter= ___ inches Height= ___ feet

# SOIL EROSION AND SEDIMENT CONTROL PLAN–INTERMEDIATE PHASE

GRAPHIC SCALE
0 50' 75' 100' 150' 250'
( IN FEET )
1 inch = 50 ft.

EFFINGHAM COUNTY B.O.E. MAINTENANCE FACILITY
GUYTON
EFFINGHAM COUNTY BOARD OF EDUCATION
GEORGIA

JAMES W. BUCKLEY & ASSOCIATES INC. - ARCHITECTS, CIVIL ENGINEERS
SWAINSBORO, ALBANY, ROME, AND SAVANNAH
GEORGIA

SOIL EROSION AND SEDIMENT CONTROL PLAN-INTERMEDIATE PHASE



GEORGIA REGISTERED No. 36129 PROFESSIONAL ENGINEER WILLIAM D. MARTIN

GSWCC LEVEL II CERT # 0000095438

811 Know what's below. Call before you dig.

ISSUED FOR: BID

DRAWN BY: GOG
CHECKED BY: WDM
APPROVED BY:
DATE: 12-20-2024
PROJECT NO.: 22-065

SHEET NUMBER: SE1.1



J:\Effingham County Schools\22-065 Effingham County Schools Maintenance Facility\2- Certificate\SE1.dwg, 12/19/2024 4:31:13 PM

NOTE:
ALL SILT FENCE (Sd1-S), INLET PROTECTION (Sd2-F, Sd2-P), CONSTRUCTION EXIT (Co), AND ANY OTHER TEMPORARY BMP's SHALL REMAIN AND BE MAINTAINED THROUGHOUT DURATION OF CONSTRUCTION UNTIL SITE IS STABILIZED. ONCE THE SITE IS STABILIZED, ALL TEMPORARY BMP's SHALL BE REMOVED.

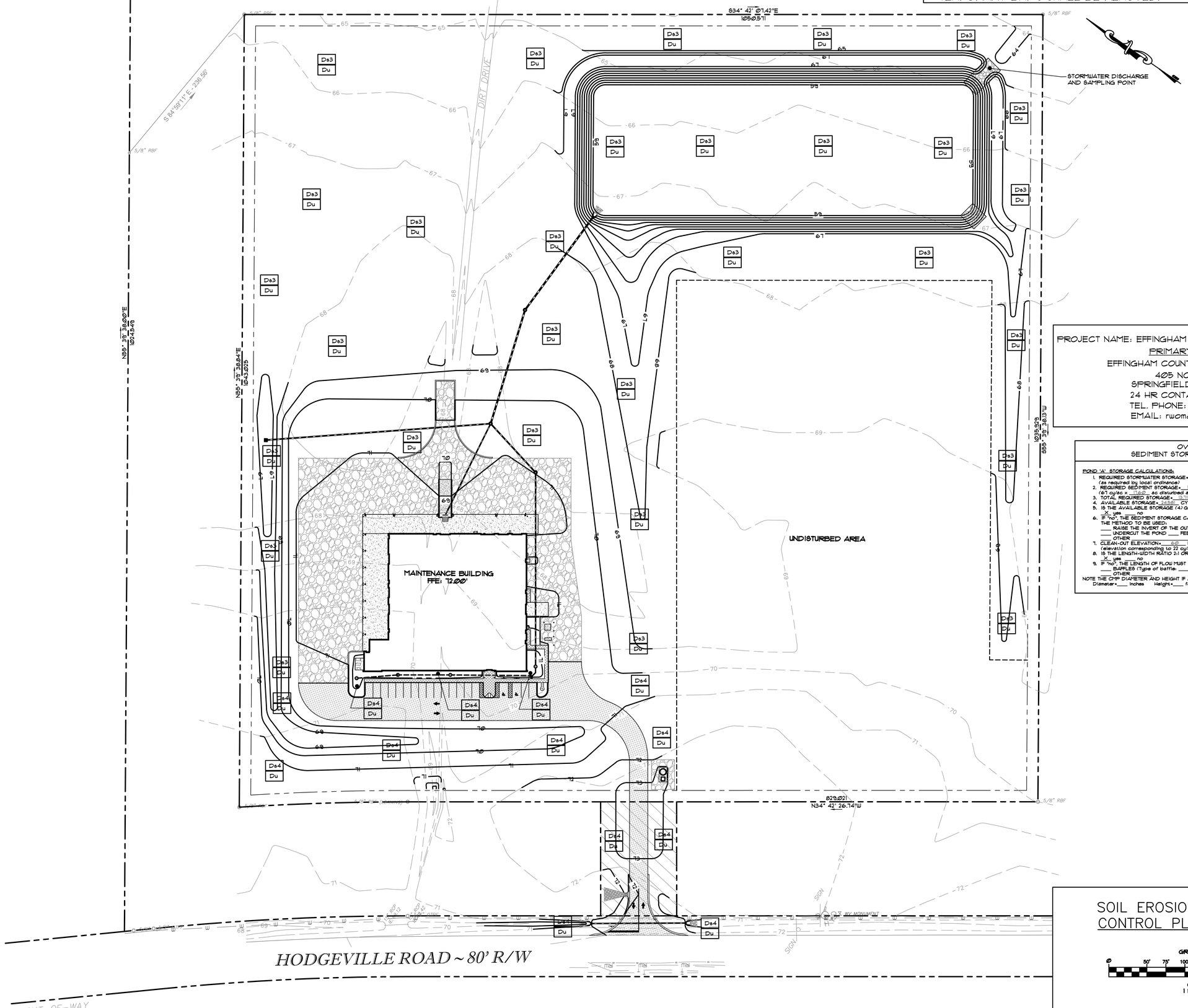


PROJECT NAME: EFFINGHAM CO. B.O.E. MAINTENANCE FACILITY
PRIMARY PERMITTEE:
EFFINGHAM COUNTY BOARD OF EDUCATION
405 NORTH ASH ST.
SPRINGFIELD, GEORGIA 31329
24 HR CONTACT: RON WOMACK
TEL. PHONE: (912) 656-5953
EMAIL: rwomack@effingham.k12.ga.us

## OVERALL SEDIMENT STORAGE CALCULATIONS

POND 'A' STORAGE CALCULATIONS:

1. REQUIRED STORMWATER STORAGE= 13.711 CY
   (as required by local ordinance)
2. REQUIRED SEDIMENT STORAGE= 1.179 CY
   (67 cy/ac x 17.60 ac disturbed area)
3. TOTAL REQUIRED STORAGE= 13.711 + 1.179 = 14.890 CY
4. AVAILABLE STORAGE= 14.90 CY
5. IS THE AVAILABLE STORAGE (4) GREATER THAN THE TOTAL REQUIRED STORAGE (3)?
   X yes ___ no
6. IF "no", THE SEDIMENT STORAGE CAPACITY OF THE POND MUST BE INCREASED. CHOOSE THE METHOD TO BE USED:
   ___ RAISE THE INVERT OF THE OUTLET STRUCTURE ___ INCHES
   ___ UNDERCUT THE POND ___ FEET
   ___ OTHER ___
7. CLEAN-OUT ELEVATION= 60.0 FT
   (elevation corresponding to 22 cy/ac x 17.60 ac disturbed area)
8. IS THE LENGTH-WIDTH RATIO 2:1 OR GREATER?
   X yes ___ no
9. IF "no", THE LENGTH OF FLOW MUST BE INCREASED. CHOOSE THE METHOD TO BE USED:
   ___ BAFFLES (Type of baffle: _____)
   ___ OTHER ___

NOTE THE CMP DIAMETER AND HEIGHT IF A HALF-ROUND CMP RETROFIT IS TO BE USED.
Diameter=___ inches Height=___ feet

# SOIL EROSION AND SEDIMENT CONTROL PLAN–FINAL PHASE

GRAPHIC SCALE
0 50' 75' 100' 150' 250'
( IN FEET )
1 inch = 50 ft.

EFFINGHAM COUNTY B.O.E. MAINTENANCE FACILITY
GUYTON
EFFINGHAM COUNTY BOARD OF EDUCATION
GEORGIA

JAMES W. BUCKLEY & ASSOCIATES INC. - ARCHITECTS, CIVIL ENGINEERS
SVANNSBORO, ALBANY, ROME, AND SAVANNAH
GEORGIA



SOIL EROSION AND SEDIMENT CONTROL PLAN-FINAL PHASE

GEORGIA REGISTERED No. 36129 PROFESSIONAL ENGINEER WILLIAM D. MARTIN
GSWCC LEVEL II
CERT # 0000055308

811 Know what's below. Call before you dig.

ISSUED FOR: BID
DRAWN BY: GOG
CHECKED BY: WDM
APPROVED BY: 12-20-2024
DATE
PROJECT NO.: 22-065
SHEET NUMBER: SE1.2



J:\Effingham County Schools\22-065 Effingham County School Maintenance Facility\2. Civil\01CD\SE1.2, 10-23-2024 dwg, 12/19/2024 4:27:09 PM

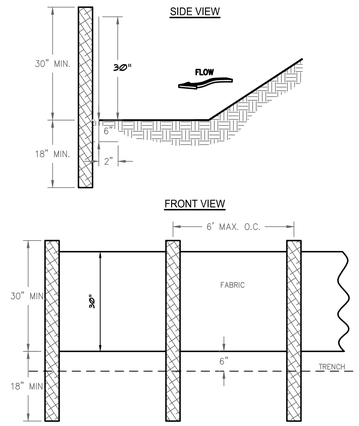


NOTES:
1. USE STEEL OR WOOD POSTS OR AS SPECIFIED BY THE EROSION, SEDIMENTATION, AND POLLUTION CONTROL PLAN.
2. HEIGHT (*) IS TO BE SHOWN ON THE EROSION, SEDIMENTATION, AND POLLUTION CONTROL PLAN.

## 8cl-NS SILT FENCE - NON-SENSITIVE

NOT TO SCALE

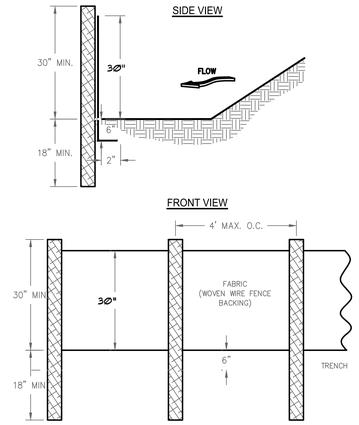


NOTES:
1. USE STEEL OR WOOD POSTS OR AS SPECIFIED BY THE EROSION, SEDIMENTATION, AND POLLUTION CONTROL PLAN.
2. HEIGHT (*) IS TO BE SHOWN ON THE EROSION, SEDIMENTATION, AND POLLUTION CONTROL PLAN.

## 8cl-S SILT FENCE - SENSITIVE

NOT TO SCALE

TYPICAL INSTALLATION GUIDELINES FOR ROLLED EROSION CONTROL PRODUCTS (RECP)

BLANKET AND MATTING CROSS-SECTIONS

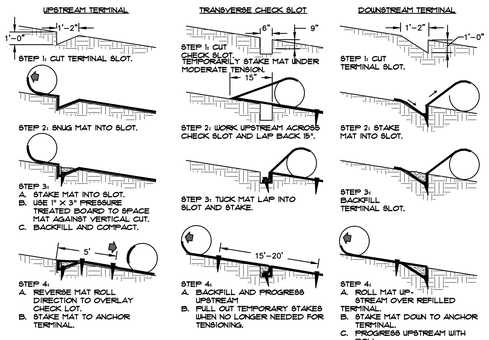


SEQUENTIAL ROLL RUN OUT IN CHANNELS

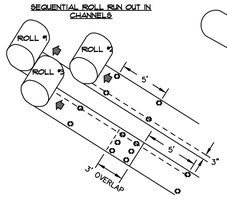


PICTORIAL VIEW OF TRANSVERSE SLOT

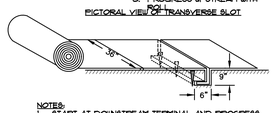


NOTES:
1. START AT DOWNSTREAM TERMINAL AND PROGRESS UPSTREAM.
2. FIRST ROLL IS CENTERED LONGITUDINALLY IN MID-CHANNEL AND PINNED WITH TEMPORARY STAKES TO MAINTAIN ALIGNMENT.
3. SUBSEQUENT ROLLS FOLLOW IN STAGGERED SEQUENCE BEHIND THE FIRST ROLL. USE THE CENTER ROLL FOR ALIGNMENT TO THE CHANNEL CENTER.
4. WORK OUTWARDS FROM THE CHANNEL CENTER TO THE EDGE.
5. USE 3" OVERLAPS AND STAKE AT 5' INTERVALS ALONG THE SEAMS.
6. USE 3" OVERLAPS AND SHINGLE DOWNSTREAM TO CONNECT THE LINING AT THE ROLL ENDS.

## 8s SLOPE STABILIZATION

NOT TO SCALE

CONCRETE WASHOUT AREA

1. SITING:
   CONCRETE WASHOUT FACILITIES SHALL NOT BE PLACED WITHIN 50 FT. OF STORM DRAINS, OPEN DITCHES, OR STATE WATERS. THE CONCRETE WASHOUT FACILITIES SHALL BE PLACED IN A LOCATION THAT ALLOWS CONVENIENT ACCESS FOR CONCRETE TRUCKS. APPROPRIATE GRAVEL OR ROCK SHALL COVER PATHS TO CONCRETE WASHOUT FACILITIES, UNLESS THEY ARE LOCATED IN DEVELOPED AREAS. THE NUMBER OF FACILITIES SHALL BE DETERMINED BY THE ENGINEER AND SHOWN ACCORDINGLY ON PLANS.
2. INSPECTION:
   ALL CONCRETE WASHOUT FACILITIES SHALL BE INSPECTED DAILY TO DETERMINE IF THEY HAVE BEEN FILLED TO 75 (SEVENTY-FIVE) PERCENT CAPACITY. ENSURE THAT PLASTIC LININGS ARE INTACT AND SIDEWALLS AND/OR HAY BALES HAVE NOT BEEN DAMAGED TO DAILY CONSTRUCTION ACTIVITIES.
3. MATERIAL REMOVAL:
   a. CONCRETE WASHOUT FACILITIES ARE DESIGNED TO PROMOTE EVAPORATION WHERE FEASIBLE. HOWEVER, IF STORED LIQUIDS HAVE NOT EVAPORATED AND THE WASHOUT IS NEARING CAPACITY, VACUUM AND DISPOSE IN AN APPROVED MANNER - CHECK WITH THE LOCAL SANITARY SEWER AUTHORITY TO DETERMINE IF THERE ARE SPECIAL DISPOSAL REQUIREMENTS FOR CONCRETE WASH WATER. REMOVE LIQUIDS OR COVER THE STRUCTURES BEFORE ANTICIPATED RAINSTORMS TO PREVENT OVERFLOWS OR DURING NON-CONSTRUCTION ACTIVITIES.

   b. REMOVE HARDENED SOLIDS WHOLE OR BREAK THEM UP DEPENDING ON THE TYPE OF EQUIPMENT AVAILABLE AT THE SITE. REUSE THE SOLIDS ON-SITE OR HAUL THEM AWAY FOR RECYCLING. CHECK WITH THE LOCAL RECYCLING AGENCY TO DETERMINE IF THE SOLIDS CAN BE USED.

   c. WHEN MATERIALS ARE REMOVED FROM THE CONCRETE WASHOUT FACILITIES, BUILD A NEW STRUCTURE OR, IF THE PREVIOUS STRUCTURE IS STILL INTACT, INSPECT THE STRUCTURE FOR SIGNS OF WEAKENING OR DAMAGE AND MAKE ANY NECESSARY REPAIRS. LINE THE STRUCTURE WITH NEW LINING THAT IS FREE OF HOLES OR TEARS AND REPLACE SIGNAGE IF NECESSARY.
4. AT NO TIME SHALL LIQUIDS BE PUMPED INTO STORM DRAINS, OPEN DITCHES, OR STATE WATERS.

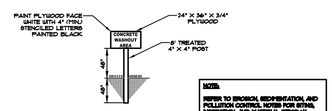


SIGN DETAIL

NOTE:
REFER TO EROSION, SEDIMENTATION, AND POLLUTION CONTROL NOTES FOR SIGNS, INSPECTION, AND MATERIAL REMOVAL.

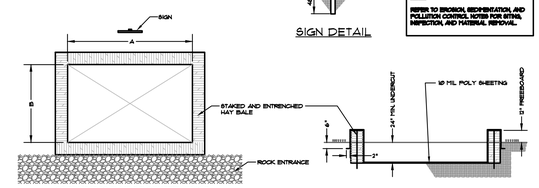


PLAN

SECTION

MINIMUM SIZES FOR CONCRETE WASHOUT

| SIZE OF BUILDING (S.F.) | A | B |
|---|---|---|
| 0-5,000 | 5 FT. | 5 FT. |
| 5,001-50,000 | 8 FT. | 8 FT. |
| 50,001 AND OVER ** | 12 FT. | 12 FT. |

** TWO CONCRETE WASHOUTS REQUIRED. ONE SHOULD BE PLACED NEAR MASONRY ACTIVITIES.

## TEMPORARY WASH-OUT

NOT TO SCALE

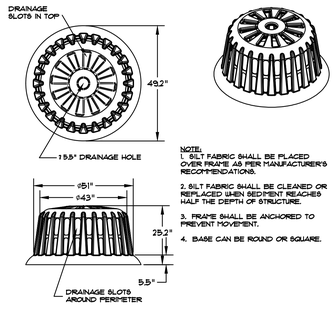


NOTE:
1. SILT FABRIC SHALL BE PLACED OVER FRAME AS PER MANUFACTURER'S RECOMMENDATIONS.
2. SILT FABRIC SHALL BE CLEANED OR REPLACED WHEN SEDIMENT REACHES HALF THE DEPTH OF STRUCTURE.
3. FRAME SHALL BE ANCHORED TO PREVENT MOVEMENT.
4. BASE CAN BE ROUND OR SQUARE.

## 8d2-SS TEMPORARY SEDIMENT TRAP

NOT TO SCALE — SILT SAVER

OVERLAP AT FABRIC ENDS

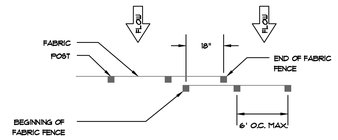


TOP VIEW - NOT TO SCALE

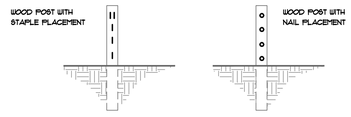


FRONT VIEWS - NOT TO SCALE

NOTES:
1. THE FABRIC AND WIRE SHOULD BE SECURELY FASTENED TO POSTS AND FABRIC ENDS MUST BE OVERLAPPED A MINIMUM OF 18" OR WRAPPED TOGETHER AROUND A POST TO PROVIDE A CONTINUOUS FABRIC BARRIER AROUND THE INLET.

## 8d1 FASTENERS FOR SILT FENCES

NOT TO SCALE

CHAIN LINK FENCE DETAIL

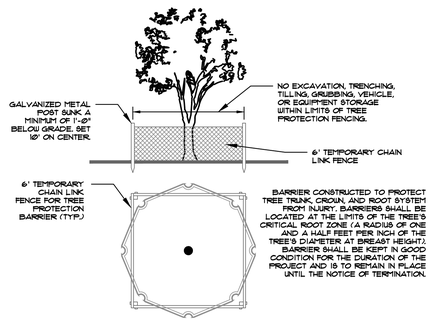


FOR ADDED PROTECTION

-PROVIDE 4" DEEP ORGANIC MULCH OVER ANY UNPROTECTED ROOT ZONE.
-PROVIDE TEMPORARY IRRIGATION WHERE PRACTICAL AND FEASIBLE.

## Tr TREE PROTECTION

NOT TO SCALE

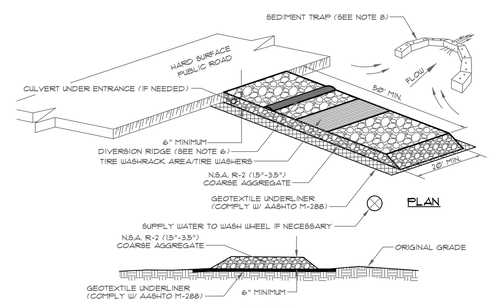


SECTION

NOTES:
1. AVOID LOCATING ON STEEP SLOPES OR AT CURVES ON PUBLIC ROADS.
2. REMOVE ALL VEGETATION AND OTHER UNSUITABLE MATERIAL FROM THE FOUNDATION AREA, GRADE, AND CROWN FOR POSITIVE DRAINAGE.
3. AGGREGATE SIZE SHALL BE IN ACCORDANCE WITH NATIONAL STONE ASSOCIATION R-2 (1.5"-3.5" STONE).
4. GRAVEL PAD SHALL HAVE A MINIMUM THICKNESS OF 6".
5. PAD WIDTH SHALL BE EQUAL FULL WIDTH AT ALL POINTS OF VEHICULAR EGRESS, BUT NO LESS THAN 20'.
6. A DIVERSION RIDGE SHOULD BE CONSTRUCTED WHEN GRADE TOWARD PAVED AREA IS GREATER THAN 2%.
7. INSTALL PIPE UNDER THE ENTRANCE IF NEEDED TO MAINTAIN DRAINAGE DITCHES.
8. WHEN WASHING IS REQUIRED, IT SHOULD BE DONE ON AN AREA STABILIZED WITH CRUSHED STONE THAT DRAINS INTO AN APPROVED SEDIMENT TRAP OR SEDIMENT BASIN (DIVERT ALL SURFACE RUNOFF AND DRAINAGE FROM THE ENTRANCE TO A SEDIMENT CONTROL DEVICE).
9. WASHRACKS AND/OR TIRE WASHERS MAY BE REQUIRED DEPENDING ON SCALE AND CIRCUMSTANCE. IF NECESSARY, WASHRACK DESIGN MAY CONSIST OF ANY MATERIAL SUITABLE FOR TRUCK TRAFFIC THAT REMOVES MUD AND DIRT.
10. MAINTAIN AREA IN A WAY THAT PREVENTS TRACKING AND/OR FLOW OF MUD ONTO PUBLIC RIGHT-OF-WAYS. THIS MAY REQUIRE TOP DRESSING, REPAIR AND/OR CLEANOUT OF ANY MEASURES USED TO TRAP SEDIMENT.
11. CONTRACTOR SHALL LIMIT CONSTRUCTION TRAFFIC TO DESIGNATED CONSTRUCTION EXITS. IF CONTRACTOR ADDS ADDITIONAL EXITS NOT DESIGNATED ON PLANS, CONTRACTOR IS RESPONSIBLE FOR INSTALLING CONSTRUCTION EXITS PER DETAIL AT EVERY LOCATION USED FOR CONSTRUCTION TRAFFIC.

## Co CONSTRUCTION EXIT

NOT TO SCALE

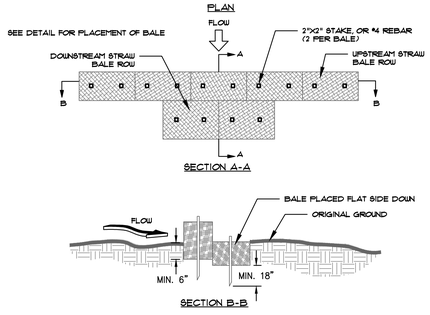


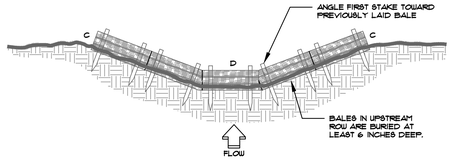


NOTES:
1. BALES SHOULD BE BOUND WITH WIRE OR NYLON STRING AND SHOULD BE PLACED IN ROWS WITH BALE ENDS TIGHTLY ABUTTING THE ADJACENT BALES.
2. REMOVE #4 REBAR AFTER STRAW BALES ARE NO LONGER IN PLACE.
3. POINT C OF SECTION B-B SHOULD ALWAYS BE HIGHER THAN POINT D.
4. STRAW-BALE CHECK DAMS SHALL NOT BE USED WHERE THE DRAINAGE AREA EXCEEDS ONE ACRE.

Cd-Hb
1. CFS IN THE CHANNEL/DITCH THAT THE CHECK DAM IS BEING USED IN: 0.80 CFS
2. ABOVE 2.0 CFS: YES _____ NO X
3. IF YES, LIST BMP BEING USED IN CONJUNCTION WITH CHECK DAMS: _____

## Cd-Hb STRAW BALE CHECK DAM

NOT TO SCALE

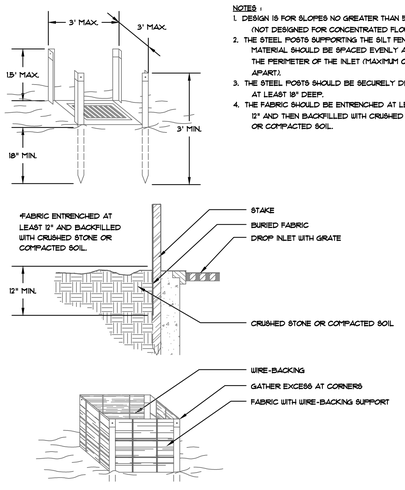


STEEL FRAME AND SILT FENCE INSTALLATION

NOTES:
1. DESIGN IS FOR SLOPES NO GREATER THAN 5% (NOT DESIGNED FOR CONCENTRATED FLOWS).
2. THE STEEL POSTS SUPPORTING THE SILT FENCE MATERIAL SHOULD BE SPACED EVENLY AROUND THE PERIMETER OF THE INLET (MAXIMUM OF 3' APART).
3. THE STEEL POSTS SHOULD BE SECURELY DRIVEN AT LEAST 18" DEEP.
4. THE FABRIC SHOULD BE ENTRENCHED AT LEAST 12" AND THEN BACKFILLED WITH CRUSHED STONE OR COMPACTED SOIL.

## 8d2-F FABRIC FRAME INLET PROTECTION

NOT TO SCALE

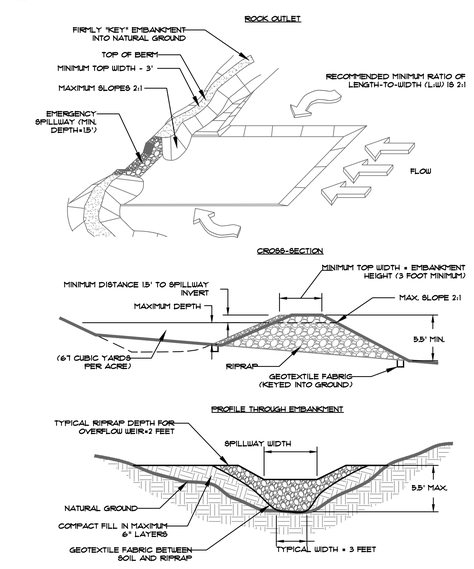


## 8d4-C TEMPORARY SEDIMENT TRAP

NOT TO SCALE

PIPE OUTLET TO FLAT AREA -- NO WELL DEFINED CHANNEL

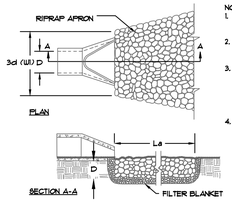


NOTES:
1. La IS THE LENGTH OF THE RIPRAP APRON.
2. D = 1.5 TIMES THE MAXIMUM STONE DIAMETER BUT NOT LESS THAN 6".
3. IN A WELL-DEFINED CHANNEL EXTEND THE APRON UP THE CHANNEL BANKS TO AN ELEVATION OF 6" ABOVE THE MAXIMUM TAILWATER DEPTH OR TO THE TOP OF THE BANK (WHICHEVER IS LESS).
4. A FILTER BLANKET OR FILTER FABRIC SHOULD BE INSTALLED BETWEEN THE RIPRAP AND THE SOIL FOUNDATION.

PIPE OUTLET TO WELL DEFINED CHANNEL

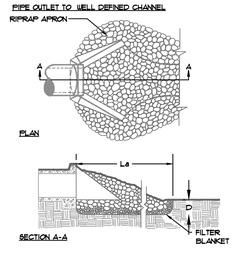


OUTLET PROTECTION CHART

| OUT I.D. | SLOPE (%) | D (FT) | Q (CFS) | V (FPS) | Tw (MIN/MAX) | La (FT) | 3D (W) (FT) | W (FT) | d50 (FT) | Dmax (FT) | D (FT) |
|---|---|---|---|---|---|---|---|---|---|---|---|
| D1 | 0.5% | 2 | 17.36 | 5.53 | MIN | 12 | 6 | 14 | 0.4' | 1.5 | 0.6' |
| D11 | 0.3% | 1.25 | 3.84 | 3.13 | MIN | 9 | 3.75 | 10.25 | 0.3' | 1.5 | 0.5' |

## St RIP RAP OUTLET PROTECTION



EFFINGHAM COUNTY B.O.E. MAINTENANCE FACILITY
GUYTON — EFFINGHAM COUNTY BOARD OF EDUCATION — GEORGIA

JAMES W. BUCKLEY & ASSOCIATES INC. - ARCHITECTS, CIVIL ENGINEERS
SVANNSBORO, ALBANY, ROME, AND SAVANNAH — GEORGIA

SOIL EROSION AND SEDIMENTATION CONTROL NOTES AND DETAILS

GEORGIA REGISTERED No. 36129 PROFESSIONAL ENGINEER WILLIAM D. MARTIN

GSWCC LEVEL II CERT # 0000065308

811 Know what's below. Call before you dig.

ISSUED FOR: BID

GOG — DRAWN BY
WDM — CHECKED BY
12-20-2024 — APPROVED BY
22-065 — DATE
PROJECT NO.

SHEET NUMBER: SE2.0



J:\Effingham County Schools\22-065 Effingham County School Maintenance Facility\2. Drafting\SE\SE2.0.dwg, 12/19/2024 11:27:59 AM

## TACKIFIERS

Tac

NOT TO SCALE

### DEFINITION

A substance used as tie-down for soil, compost, seed, straw, hay or mulch. They hydrate in water and readily blend with other slurry materials to form a homogenous slurry.

### PURPOSE

The purpose of tackifiers are to reduce soil erosion from wind and water on construction sites. It also increases the performance of the mulching material, so that it can:

- Increase infiltration.
- Increase soil fertility
- Control undesirable vegetation.
- Reduce runoff stormwater turbidity and loss of topsoil.
- Modify soil temperature.
- Increase soil cohesion and stabilization.
- Enhance seed germination

### CONDITIONS

This practice is intended for direct soil surface application to sites where the timely establishment of vegetation may not be feasible or where vegetative cover is absent or inadequate.

### CRITERIA

- All organic mulching materials shall be anchored by tackifiers/binders or matting/netting. Tackifiers and binders are used to anchor wood cellulose, wood pulp fiber, and other mulch materials applied with hydroseeding equipment.
- Only anionic forms of PAM shall be used. Not harmful to plants, animals, and aquatic life.
- Application rates shall conform to manufacturer's guidelines for application.
- Shall not reduce infiltration rates.
- All organic tackifiers must be derived from natural plant sources.
- Contain no growth or germination inhibiting materials.
- Synthetic fibers shall be of nylon or polyester blends.
- There are 5 types of tackifiers:
  - Tac-1 Synthetic Polymers
  - Tac-2 Organic Polymers
  - Tac-3 Synthetic/Organic Blends
  - Tac-4 Organic Polymers w/ Synthetic Fibers
  - Tac-5 Synthetic/Organic Blends w/ Synthetic Fibers

## BUFFER ZONE

Bf

NOT TO SCALE

### DEFINITION

A strip of undisturbed, original vegetation, enhanced or restored existing vegetation or the re-establishment of vegetation surrounding an area of disturbance or bordering streams, ponds, wetlands, lakes, and coastal waters

### PURPOSE

- Reduce storm runoff velocities
- Act as screen for "visual pollution"
- Reduce construction noise
- Improve aesthetics
- Filtering and infiltrating runoff
- Cooling rivers and streams by creating shade
- Provide food and cover for wildlife and aquatic organisms
- Flood protection
- Protect channel banks from erosion

### INSTALLATION

- Important factors, such as slope, hydrology, width, and structure shall be considered.
- The GA EPD enforces a 25 ft minimum undisturbed stream buffer requirement for warm water fisheries and a 50 ft minimum undisturbed stream buffer requirement for cold water fisheries.
- If any land-disturbing activity, exempt or non-exempt, occurs within a mandated stream buffer, all cut and fills shall be stabilized with appropriate slope stabilization.

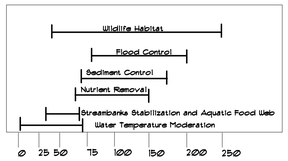


Figure 1. Range of Minimum Width (ft.) for Meeting Specific Buffer Objectives (Palone & Todd, draft)

Types of Buffers

General Buffer
- A strip of undisturbed, original land surrounding the disturbed site.
- A width should be selected to permit the zone to serve the purpose(s) listed above.

Vegetated Stream Buffer
- A vegetated stream buffer of 50 ft or greater can protect waters from excess sedimentation.
- The size of the stream and topography of the area must be considered to determine the appropriate width.
- The buffer should be increased 2 ft in width for every 1% slope.

Planting Techniques
- Plantings for buffer re-establishment and enhancement can consist of bare root seedlings, container-grown seedlings, container-grown plants, and balled and burlapped plants.
- Standard erosion control grasses and legumes may be used in denuded areas for quick stabilization.
- Refer to Tables 6-1.1 & 6-1.2 in the Manual for Erosion & Sediment Control in Georgia for complete listing of all Native Plants & Unrooted Hardwood Cuttings.
- Streambank stabilization techniques may be required if steep slopes and hydrologic patterns deem it necessary.
- Soil preparation and maintenance are essential for the establishment of planted vegetation.

Table 1. Effectiveness of Vegetative Buffer Strips

| Purpose | Grass | Shrub | Tree |
|---|---|---|---|
| Filter Sediment | High | Low | Low |
| Filter Chemicals | Medium | Low | Low |
| Stabilize Stream Banks | Low | High | High |
| Improve Aesthetics | Low | Medium | High |
| Improve Habitat | Low | Medium | High |
| Reduce Noise | Low | Medium | High |

### MAINTENANCE

- Areas closest to the stream should be maintained with minimal impact.
- During periods of drought, water as necessary in all buffer areas planted for enhancement.
- Remove weeds by hand or with careful spraying.
- Monitor to determine if plant material needs to be replaced.
- Fertilizer is unnecessary if the appropriate vegetation is chosen.

### REFERENCES

- Ds1 Disturbed Area Stabilization (With Mulching Only)
- Ds2 Disturbed Area Stabilization (With Temporary Seeding)
- Ds3 Disturbed Area Stabilization (With Permanent Vegetation)
- Sb Streambank Stabilization (With Permanent Vegetation)

## DISTURBED AREA STABILIZATION (WITH MULCHING ONLY)

Ds1

NOT TO SCALE

### DEFINITION

Applying plant residues or other suitable materials, produced on the site if possible, to the soil surface.

### CONDITIONS

Mulch or temporary grassing shall be applied to all exposed areas within 14 days of disturbance. Mulch can be used as a singular erosion control device for up to six months, but it shall be applied at the appropriate depth, depending on the material used, anchored, and have a continuous 90% cover or greater of the soil surface. Maintenance shall be required to maintain appropriate depth and 90% cover. Temporary vegetation may be employed instead of mulch if the area will remain undisturbed for less than six months. If an area will remain undisturbed for greater than six months, permanent vegetative techniques shall be employed.

### SPECIFICATIONS

MULCHING WITHOUT SEEDING
This standard applies to grades or cleared areas where seedings may not have a suitable growing season to produce an erosion retardant cover, but can be stabilized with a mulch cover.

Site Preparation
1. Grade to permit the use of equipment for applying and anchoring mulch.
2. Install needed erosion control measures as required such as dikes, diversions, berms, terraces and sediment barriers.
3. Loosen compact soil to a minimum depth of 3 inches.

Mulching Materials
Select one of the following materials and apply at the depth indicated.
1. Dry straw or hay shall be applied at a depth of 2 to 4 inches providing complete soil coverage. One advantage of this material is easy application.
2. Wood waste (chips, sawdust or bark) shall be applied at a depth of 2 to 3 inches. Organic material from the clearing stage of development should remain on site, be chipped, and applied as mulch. This method of mulching can greatly reduce erosion control costs.
3. Polyethylene film shall be anchor trenched at the top as well as incrementally as necessary.

Applying Mulch
When mulch is used without seeding, mulch shall be applied to provide full coverage of the exposed area.
1. Dry straw or hay mulch and wood chips shall be applied uniformly by hand or by mechanical equipment.
2. If the area will eventually be covered with perennial vegetation, 20-30 pounds of nitrogen per acre in addition to the normal amount shall be applied to offset the uptake of nitrogen caused by the decomposition of the organic mulches.
3. Cutback asphalt shall be applied uniformly. Care should be taken in areas of pedestrian traffic due to problems of 'tracking in' or damage to shoes, clothing, etc.
4. Apply polyethylene film on exposed areas.

Anchoring Mulch
1. Straw or hay mulch can be pressed into the soil with a disk harrow with the disk set straight or with a special 'packer disk.' Disks may be smooth or serrated and should be 20 inches or more in diameter and 8 to 12 inches apart. The edges of the disk should be dull enough to press the mulch into the ground without cutting it, leaving much of it in an erect position. Mulch shall not be plowed into the soil.
2. Synthetic tackifiers or binders approved by GDOT shall be applied in conjunction with or immediately after the mulch is spread. Synthetic tackifiers shall be mixed and applied according to manufacturer's specifications. Refer to Tp - Tackifiers and Binders.
3. Rye or wheat can be included with Fall and Winter plantings to stabilize the mulch. They shall be applied at a rate of one-quarter to one half bushel per acre.
4. Plastic mesh or netting with mesh no larger than one inch by one inch may be needed to anchor straw or hay mulch on unstable soils and concentrated flow areas. These materials shall be installed and anchored according to manufacturer's specifications.

Irrigation
Irrigation shall be applied at a rate that will not cause runoff.

## SEEDING RATES FOR PERMANENT SEEDING

| SPECIES | RATE Per 1,000 sq.ft. | RATE Per Acre * | PLANTING DATES ** |
|---|---|---|---|
| BAHIA | 1.4 POUNDS | 60 LBS. | 1/1-12/31 |
| BERMUDA | .02 POUND | 1.0 LBS. | 2/15-7/1 |
| CENTIPEDE | BLOCK SOD ONLY | BLOCK SOD ONLY | 4/1-7/1 |
| LESPEDEZA | 1.7 POUNDS | 75 LBS. | 1/1-12/31 |
| WEEPING LOVE GRASS | .01 POUND | 4 LBS. | 2/1-6/15 |
| SWITCH GRASS | .03 POUND | 1.0 LBS. | 3/15-6/1 |

* Unusual site conditions may require heavier seeding rates
** Seeding dates may need to be altered to fit temperature variations and conditions.

## DISTURBED AREA STABILIZATION (WITH PERMANENT VEGETATION)

Ds3

NOT TO SCALE

### DEFINITION

The planting of perennial vegetation such as trees, shrubs, vines, grasses, or legumes on exposed areas for final permanent stabilization. Permanent perennial vegetation shall be used to achieve final stabilization.

### CONDITIONS

Permanent perennial vegetation is used to provide a protective cover for exposed areas including cuts, fills, dams, and other denuded areas.

### SPECIFICATIONS

Grading and Shaping

Grading and shaping may not be required where hydraulic seeding and fertilizing equipment is to be used. Vertical banks shall be sloped to enable plant establishment.

When conventional seeding and fertilizing are to be done, grade and shape where feasible and practical, so that equipment can be used safely and efficiently during seedbed preparation, seeding, mulching and maintenance of the vegetation.

concentrations of water that will cause excessive soil erosion shall be diverted to a safe outlet. Diversions and other treatment practices shall conform with the appropriate standards and specifications.

Seedbed Preparation

Seedbed preparation may not be required where hydraulic seeding and fertilizing equipment is to be used. When conventional seeding is to be used, seedbed preparation will be done as follows:

Broadcast plantings

1. Tillage at a minimum, shall adequately loosen the soil to a depth of 4 to 6 inches; alleviate compactions; incorporate lime and fertilizer; smooth and firm the soils allow for the proper placement of seed, sprigs, or plantsr and allow for the anchoring of straw or hay mulch if a disk is to be used.
2. Tillage may be done with any suitable equipment.
3. Tillage should be done on the contour where feasible.
4. On slopes too steep for the safe operation of tillage equipment, the soil surface shall be pitted or trenched across the slope with appropriate hand tools to provide two places 6 to 8 inches apart in which seed may lodge and germinate. Hydraulic seeding may also be used.

LIME AND FERTILIZER RATES AND ANALYSIS

Agricultural lime is required at the rate of one to two tons per acre unless soil tests indicate otherwise. Graded areas require lime application. If lime is applied within six months of planting permanent perennial vegetation, additional lime is not required. Agricultural lime shall be within the specifications of the Georgia Department of Agriculture.

Lime spread by conventional equipment shall be "ground limestone." Ground limestone is calcitic or dolomitic limestone ground so that 90 percent of the material will pass through a 10-mesh sieve, not less than 50 percent will pass through a 50-mesh sieve and not less than 25 percent will pass through a 100-mesh sieve.

Fast-acting lime spread by hydraulic seeding equipment should be "finely ground limestone" spanning from the 180 micron size to the 5 micron size. Finely ground limestone is calcitic or dolomitic limestone ground so that 55 percent of the material will pass through a 100-mesh sieve.

It is desirable to use dolomitic limestone in the Sand Hills, Southern Coastal Plain and Atlantic Coast Flatwoods MLRAs. (See Figure 6-4.1)

Agricultural lime is generally not required where only trees are planted.

Initial fertilization, nitrogen, topdressing, and maintenance fertilizer requirements for each species or combination of species are listed in Table 6-5.1.

Individual Plants

1. Where individual plants are to be set, the soil shall be prepared by excavating holes, opening furrows, or dibble planting.
2. For nursery stock plants, holes shall be large enough to accommodate roots without crowding.
3. Where pine seedlings are to be planted, subsoil under the row 36 inches deep on the contour four to six months prior to planting. Subsoiling should be done when the soil is dry, preferably in August or September.

Planting

Hydraulic Seeding

Mix the seed (inoculated if needed), fertilizer, and wood cellulose or wood pulp fiber mulch with water and apply in a slurry uniformly over the area to be treated. Apply within one hour after the mixture is made.

Conventional Seeding

Seeding will be done on a freshly prepared and firmed seedbed. For broadcast planting, use a cultipacker seeder, drill, rotary seeder, other mechanical seeder, or hand seeding to distribute the seed uniformly over the area to be treated. Cover the seed lightly with 1/8 to 1/4 inch of soil for small seed and 1/2 to 1 inch for large seed when using a cultipacker or other suitable equipment.

No-Till Seeding

No-till seeding is permissible into annual cover crops when planting is done following maturity of the cover crop or if the temporary cover stand is sparse enough to allow adequate growth of the permanent (perennial) species. No-till seeding shall be done with appropriate no-till seeding equipment. The seed must be uniformly distributed and planted at the proper depth.

Individual Plants

Shrubs, vines and sprigs may be planted with appropriate planters or hand tools. Pine trees shall be planted manually in the subsoil furrow. Each plant shall be set in a manner that will avoid crowding the roots. Nursery stock plants shall be planted at the same depth or slightly deeper than they grew at the nursery. The tips of vines and sprigs must be at or slightly above the ground surface. Where individual holes are dug, fertilizer shall be placed in the bottom of the hole, two inches of soil shall be added and the plant shall be set in the hole.

LIME AND FERTILIZER APPLICATION

When hydraulic seeding equipment is used, the initial fertilizer shall be mixed with seed, inoculant (if needed), and wood cellulose or wood pulp fiber mulch and applied in a slurry. The inoculant, if needed, shall be mixed with the seed prior to being placed into the hydraulic seeder. The slurry mixture will be agitated during application to keep the ingredients thoroughly mixed. The mixture will be spread uniformly over the area within one hour after being placed in the hydroseeder.

Finely ground limestone can be applied in the mulch slurry or in combination with the top dressing.

When conventional planting is to be done, lime and fertilizer shall be applied uniformly in one of the following ways:

1. Apply before land preparation so that it will be mixed with the soil during seedbed preparation.
2. Mix with the soil used to fill the holes, distribute in furrows.
3. Broadcast after steep surfaces are scarified, pitted or trenched.
4. A fertilizer pellet shall be placed at root depth in the closing hole beside each pine tree seedling.

Mulching

Mulch is required for all permanent vegetation applications. Mulch applied to seeded areas shall achieve 75% soil cover. Select the mulching material from the following and apply as indicated:

1. Dry straw or dry hay of good quality and free of weed seeds can be used. Dry straw shall be applied at the rate of 2 tons per acre. Dry hay shall be applied at a rate of 2 1/2 tons per acre.
2. Wood cellulose mulch or wood pulp fiber shall be used with hydraulic seeding. It shall be applied at the rate of 500 pounds per acre. Dry straw or dry hay shall be applied (at the rate indicated above) after hydraulic seeding.
3. One thousand pounds of wood cellulose or wood pulp fiber, which includes a tackifier, shall be used with hydraulic seeding on slopes 3:1 or steeper.
4. Sericea lespedeza hay containing mature seed shall be applied at a rate of three tons per acre.
5. Pine straw or pine bark shall be applied at a thickness of 3 inches for bedding purposes. Other suitable materials in sufficient quantity may be used where ornamentals or other ground covers are planted. This is not appropriate for seeded areas.
6. When using temporary erosion control blankets or block sod, mulch is not required.
7. Bituminous treated roving may be applied on planted areas on slopes, in ditches or dry saturated to prevent erosion. Bituminous treated roving shall be applied within 24 hours after an area has been planted. Application rates and materials must meet Georgia Department of Transportation specifications.

Wood cellulose and wood pulp fibers shall not contain germination or growth inhibiting factors. They shall be evenly dispersed when agitated in water. The fibers shall contain a dye to allow visual metering and aid in uniform application during seeding.

Applying Mulch
Straw or hay mulch will be spread uniformly within 24 hours after seeding and/or planting. The mulch may be spread by blower-type spreading equipment, other spreading equipment or by hand. Mulch shall be applied to cover 75% of the soil surface.

Wood cellulose or wood fiber mulch shall be applied uniformly with hydraulic seeding equipment.

Anchoring Mulch
Anchor straw or hay mulch immediately after application by one of the following methods:

1. Hay and straw mulch shall be pressed into the soil immediately after the mulch is spread. A special 'packer disk' or disk harrow with the disks set straight may be used. The disks may be smooth or serrated and should be 20 inches or more in diameter and 8 to 12 inches apart. The edges of the disks shall be dull enough to press the mulch into the ground without cutting it, leaving much of it in an erect position. Mulch shall not be plowed into the soil.
2. Synthetic tackifiers or binders approved by GDOT shall be applied in conjunction with or immediately after the mulch is spread. Synthetic tackifiers shall be mixed and applied according to manufacturer's specifications. Refer to Tp - Tackifiers and Binders.
3. Rye or wheat can be included with Fall and Winter plantings to stabilize the mulch. They shall be applied at a rate of one-quarter to one half bushel per acre.
4. Plastic mesh or netting with mesh no larger than one inch by one inch may be needed to anchor straw or hay mulch on unstable soils and concentrated flow areas. These materials shall be installed and anchored according to manufacturer's specifications.

Irrigation
Irrigation shall be applied at a rate that will not cause runoff.

## SEEDING RATES FOR TEMPORARY SEEDING

| SPECIES | RATE Per 1,000 sq.ft. | RATE Per Acre * | PLANTING DATES ** |
|---|---|---|---|
| Rye | 3.9 pounds | 3 bu. | 9/1-3/1 |
| Ryegrass | 0.9 pound | 40 lbs. | 8/15-4/1 |
| Annual Lespedeza | 0.9 pound | 40 lbs. | 1/15-3/15 |
| Weeping Lovegrass | .01 pound | 4 lbs. | 2/15-6/15 |
| Sudangrass | 1.4 pounds | 60 lbs. | 3/1-8/1 |
| Browntop Millet | 0.9 pound | 40 lbs. | 4/1-7/15 |
| Wheat | 4.1 pounds | 3 bu. | 9/15-2/1 |

* Unusual site conditions may require heavier seeding rates
** Seeding dates may need to be altered to fit temperature variations and conditions.

## DISTURBED AREA STABILIZATION (WITH SODDING)

Ds4

NOT TO SCALE

### DEFINITION

A permanent vegetation using sods on highly erodible or critically eroded lands.

### CONDITIONS

This application is appropriate for areas which require immediate vegetative covers, drop inlets, grass swales, and waterways with intermittent flow .

### CONSTRUCTION SPECIFICATIONS INSTALLATION

Soil Preparation

- Bring soil surface to final grade. Clear surface of trash, woody debris, stones and clods larger than 1". Apply sod to soil surfaces only and not frozen surfaces, or gravel type soils.
- Topsoil properly applied will help guarantee stand. Don't use topsoil recently treated with herbicides or soil sterilants.
- Mix fertilizer into soil surface. Fertilize based on soil tests or Table 6-6.1. For fall planting of warm season species, half the fertilizer should be applied at planting and the other half in the spring.

Table 6-6.1. Fertilizer Requirements for Soil Surface Application

| Fertilizer Type (lbs/acre) | Fertilizer Rate (lbs/acre) | Fertilizer Rate | Season |
|---|---|---|---|
| 10-10-10 | 1000 | .025 | Fall |

- Agricultural lime should be applied based on soil tests or at a rate of 1 to 2 tons per acre.

Installation

- Lay sod with tight joints and in straight lines. Don't overlap joints. Stagger joints and do not stretch sod.
- On slopes steeper than 3:1, sod should be anchored with wooden or biodegradable pins or other approved methods.
- Installed sod should be rolled or tamped to provide good contact between sod and soil.
- Irrigate sod and soil to a depth of 4" immediately after installation.
- Sod should not be cut or spread in extremely wet or dry weather.
- Irrigation should be used to supplement rainfall for a minimum of 2-3 weeks.

MATERIALS

- Sod selected should be certified. Sod grown in the general area of the project is desirable.
- Sod should be machine cut and contain 3/4" ±1/4" of soil, not including shoots or thatch.
- Sod should be cut to the desired size within ±5%. Torn or uneven pads should be rejected.
- Sod should be cut and installed within 36 hours of digging.
- Avoid planting when subject to frost heave or hot weather if irrigation is not available.
- The sod type should be shown on the plans or installed according to Table 6-6.2. See Figure 6-4.1 for your Resource Area.

Table 6-6.2. Sod Planting Requirements

| Grass | Varieties | Resource Area | Growing Season |
|---|---|---|---|
| Bermudagrass | Common<br>Tifway<br>Tifgreen<br>Tifdwarf | M-L,P,C<br>P,C<br>P,C<br>P,C | Warm Weather |
| Bahiagrass | Pensacola | P,C | Warm Weather |
| Centipede | | P,C | Warm Weather |
| St. Augustine | Common<br>Bitterblue<br>Raleigh | C | Warm Weather |
| Zoysia | Emerald<br>Meyer | P,C | Warm Weather |
| Tall Fescue | Kentucky | M-L,P | Cool Weather |

MAINTENANCE

- Re-sod areas where an adequate stand of sod is not obtained.
- New sod should be mowed sparingly. Grass height should not be cut less than 2"-3" or as specified.
- Apply one ton of agricultural lime as indicated by soil test or every 4-6 years.
- Fertilize grasses in accordance with soil tests or Table 6-6.3.

Table 6-6.3. Fertilizer Requirements for Sod

| Types of Species | Planting Year | Fertilizer (N-P-K) | Rate (lbs/acre) | Nitrogen Top Dressing Rate (lbs/acre) |
|---|---|---|---|---|
| Cool Season Grasses | First<br>Second Maintenance | 6-12-12<br>6-12-12<br>10-10-10 | 1500<br>1000<br>400 | 50-100<br>-<br>30 |
| Warm Season Grasses | First<br>Second Maintenance | 6-12-12<br>6-12-12<br>10-10-10 | 1500<br>500<br>400 | 50-100<br>50-100<br>30 |

## FLOCCULANTS & COAGULANTS

Fl-Co

NOT TO SCALE

### DEFINITION

Formulated to assist in the solids/liquid separation of suspended particles in solution.

Coagulant - Required to help give body to the water. A coagulant neutralizes the repulsive electrical charges surrounding particles allowing them to "stick together" creating clumps or flocs that form a small to mid-size particle.

Flocculant - Facilitate the agglomeration or aggregation of the coagulated particles to form larger floccules and act as a net where it gathers up the smaller coagulated particles making a larger particle. This larger particle will slowly drop out of suspension.

### PURPOSE

- Settle suspended sediment, heavy metals and hydrocarbons (TSS) in runoff water from construction sites for water clarification.

### INSTALLATION

- Application shall conform to manufacturer's instructions and guidelines. Fl-Co applications shall comply with all federal and local laws.
- Only anionic forms of Fl-Co shall be used.
- This practice is not intended for application to surface waters of the state. It is intended for application within construction storm water ditches and storm drainage systems that feed into pre-constructed ponds or basins.

### MAINTENANCE

- Maintenance shall consist of reapplying Fl-Co via the measures above when turbidity levels are no longer met or the Fl-Co is used up. Bricks, blocks, socks,logs and bags shall be maintained when sediment accumulates on the products.

## DISTURBED AREA STABILIZATION (WITH TEMPORARY SEEDING)

Ds2

NOT TO SCALE

### DEFINITION

The establishment of temporary vegetative cover with fast growing seedings for seasonal protection on disturbed or denuded areas.

### CONDITIONS

Temporary grassing, instead of mulch, can be applied to rough graded areas that will be exposed for less than six months. Temporary vegetative measures should be coordinated with permanent measures to assure economical and effective stabilization. Most types of temporary vegetation are ideal to use as companion crops until the permanent vegetation is established.

### SPECIFICATIONS

Grading and Shaping

Excessive water run-off shall be reduced by properly designed and installed erosion control practices such as closed drains, ditches, dikes, diversions, sediment barriers and others.

No shaping or grading is required if slopes can be stabilized by hand-seeded vegetation or if hydraulic seeding equipment is to be used.

Seedbed Preparation

When a hydraulic seeder is used, seedbed preparation is not required. When using conventional or handseeding, seedbed preparation is not required if the soil material is loose and not sealed by rainfall.

When soil has been sealed by rainfall or consists of smooth cut slopes, the soil shall be pitted, trenched or otherwise scarified to provide a place for seed to lodge and germinate.

Lime and Fertilizer

Agricultural lime is required unless soil tests indicate otherwise. Apply agricultural lime at a rate of one ton per acre. Graded areas require lime application. Soils can be tested to determine if fertilizer is needed. On reasonably fertile soils or soil material, fertilizer is not required. For soils with very low fertility, 500 to 1000 pounds of 10-10-10 fertilizer or the equivalent per acre (12-16 lbs./1,000 sq. ft.) shall be applied. Fertilizer should be applied before land preparation and incorporated with a disk, ripper or chisel.

Seeding

Select a grass or grass-legume mixture suitable to the area and season of the year. Seed shall be applied uniformly by hand, cyclone seeder, drill, cultipacker seeder, or hydraulic seeder (slurry including seed and fertilizer). Drill or cultipacker seeders should normally place seed one-quarter to one-half inch deep. Appropriate depth of planting is ten times the seed diameter. Soil should be "raked" lightly to cover seed with soil if seeded by hand.

Mulching

Temporary vegetation can, in most cases, be established without the use of mulch. Mulch without seeding should be considered for short term protection. Refer to Ds1 - Disturbed Area Stabilization (With Mulching Only).

Irrigation

During times of drought, water shall be applied at a rate not causing runoff and erosion. The soil shall be thoroughly wetted to a depth that will insure germination of the seed. Subsequent applications should be made when needed.

## DUST CONTROL ON DISTURBED AREAS

Du

NOT TO SCALE

Du

DUST CONTROL ON DISTURBED AREAS
-CONTROLLING SURFACE AND AIR MOVEMENT OF DUST ON CONSTRUCTION SITES, ROADS, AND DEMOLITION SITES.

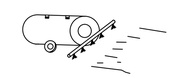

APPLY SPRAY-ON ADHESIVES TO MINERAL SOILS (NOT MUCK SOILS) AS DESCRIBED BELOW:

SPRAY-ON ADHESIVE APPLICATION REQUIREMENTS

| ADHESIVE | WATER DILUTION | NOZZLE TYPE | APPLICATION (GAL./ACRE) |
|---|---|---|---|
| ANIONIC ASPHALT EMULSION | 7:1 | COARSE SPRAY | 1,200 |
| LATEX EMULSION | 12.5:1 | FINE SPRAY | 235 |
| RESIN-IN WATER EMULSION | 4:1 | FINE SPRAY | 300 |

PURPOSE:
CONTROLLING SURFACE AND AIR MOVEMENT OF DUST ON CONSTRUCTION SITES, ROADS, AND DEMOLITION SITES.

DUST CONTROL METHOD & MATERIALS

A. TEMPORARY METHODS

1. MULCHES: SEE STANDARD Ds1 - DISTURBED AREA STABILIZATION (WITH MULCHING ONLY). SYNTHETIC RESINS MAY BE USED INSTEAD OF ASPHALT TO BIND MULCH MATERIAL. REFER TO STABILIZATION TAC - TACKIFIERS. RESINS SUCH AS CURASOL OR TERRATACK SHOULD BE USED ACCORDING TO MANUFACTURER'S RECOMMENDATIONS.
2. VEGETATIVE COVER: SEE SPECIFICATION Ds2 - DISTURBED AREA STABILIZATION (WITH TEMPORARY SEEDING).
3. SPRAY-ON ADHESIVES: THESE ARE USED ON MINERAL SOILS (NOT EFFECTIVE ON MUCK SOILS). KEEP TRAFFIC OFF THESE AREAS. REFER TO SPECIFICATION TAC - TACKIFIERS.
4. TILLAGE: THIS PRACTICE IS DESIGNED TO ROUGHEN AND BRING CLODS TO THE SURFACE. IT IS AN EMERGENCY MEASURE WHICH SHOULD BE USED BEFORE WIND EROSION STARTS. BEGIN PLOWING ON WINDWARD SIDE OF SITE. CHISEL-TYPE PLOWS SPACED ABOUT 12 INCHES APART, SPRING-TOOTHED HARROWS, AND SIMILAR PLOWS ARE EXAMPLES OF EQUIPMENT WHICH MAY PRODUCE THE DESIRED EFFECT.
5. IRRIGATION: THIS IS GENERALLY DONE AS AN EMERGENCY TREATMENT. SITE IS SPRINKLED WITH WATER UNTIL THE SURFACE IS WET. REPEAT AS NEEDED.
6. BARRIERS: SOLID BOARD FENCES, SNOWFENCES, BURLAP FENCES, CRATE WALLS, BALES OF HAY AND SIMILAR MATERIAL CAN BE USED TO CONTROL AIR CURRENTS AND SOIL BLOWING. BARRIERS PLACED AT RIGHT ANGLES TO PREVAILING CURRENTS AT INTERVALS OF ABOUT 15 TIMES THEIR HEIGHT ARE EFFECTIVE IN CONTROLLING WIND EROSION.
7. CALCIUM CHLORIDE: APPLY AT RATE THAT WILL KEEP SURFACE MOIST. MAY NEED RETREATMENT.

B. PERMANENT METHODS

1. PERMANENT VEGETATION: SEE SPECIFICATION Ds3 - DISTURBED AREA STABILIZATION (WITH PERMANENT VEGETATION). EXISTING TREES AND LARGE SHRUBS MAY AFFORD VALUABLE PROTECTION IF LEFT IN PLACE.
2. TOPSOILING: THIS ENTAILS COVERING THE SURFACE WITH LESS EROSIVE SOIL MATERIAL SEE SPECIFICATION Tp - TOPSOILING.
3. STONE: COVER SURFACE WITH CRUSHED STONE OR COARSE GRAVEL. SEE SPECIFICATION Cr - CONSTRUCTION ROAD STABILIZATION.

## DUST CONTROL ON DISTURBED AREAS

Du

NOT TO SCALE

EFFINGHAM COUNTY B.O.E. MAINTENANCE FACILITY
GUYTON GEORGIA
EFFINGHAM COUNTY BOARD OF EDUCATION

JAMES W. BUCKLEY & ASSOCIATES INC. - ARCHITECTS, CIVIL ENGINEERS
SVANNSBORO, ALBANY, ROME, AND SAVANNAH GEORGIA

SOIL EROSION AND SEDIMENTATION CONTROL NOTES AND DETAILS



GEORGIA REGISTERED No. 36129 PROFESSIONAL ENGINEER WILLIAM D. MARTIN
GSWCC LEVEL II CERT # 0000054308

811 Know what's below. Call before you dig.

ISSUED FOR
BID

GOG
DRAWN BY
CHECKED BY
WDM
APPROVED BY
12-20-2024
DATE
22-065
PROJECT NO.
SHEET NUMBER
SE2.1



J:\Effingham County Schools\22-065 Effingham County School Maintenance Facility\2. Cad\EFFINGHAM.SE. 10-22-2024 dwg, 12/19/2024 11:28:23 AM