# THIS IS IOWA BALLPARK, INC.
# FIELD OF DREAMS MOVIE SITE PROFESSIONAL BALLPARK
## 28995 LANSING ROAD
## DYERSVILLE, IA 52040

## BID PACKAGE 01

## BP01 - BID PACKAGE 01



PROJECT NUMBER: **R3005.252.04**

DATE: **2023-09-27**

PROJECT TEAM: CIVIL ENGINEER - Origin Design Co., 137 Main Street Ste. 100, Dubuque, IA 52001
ARCHITECT - RDG Planning & Design, 301 Grand Avenue, Des Moines, IA 50309
CONSTRUCTION MANAGER - Miron Construction, 335 French Court SW, Cedar Rapids, IA 52404



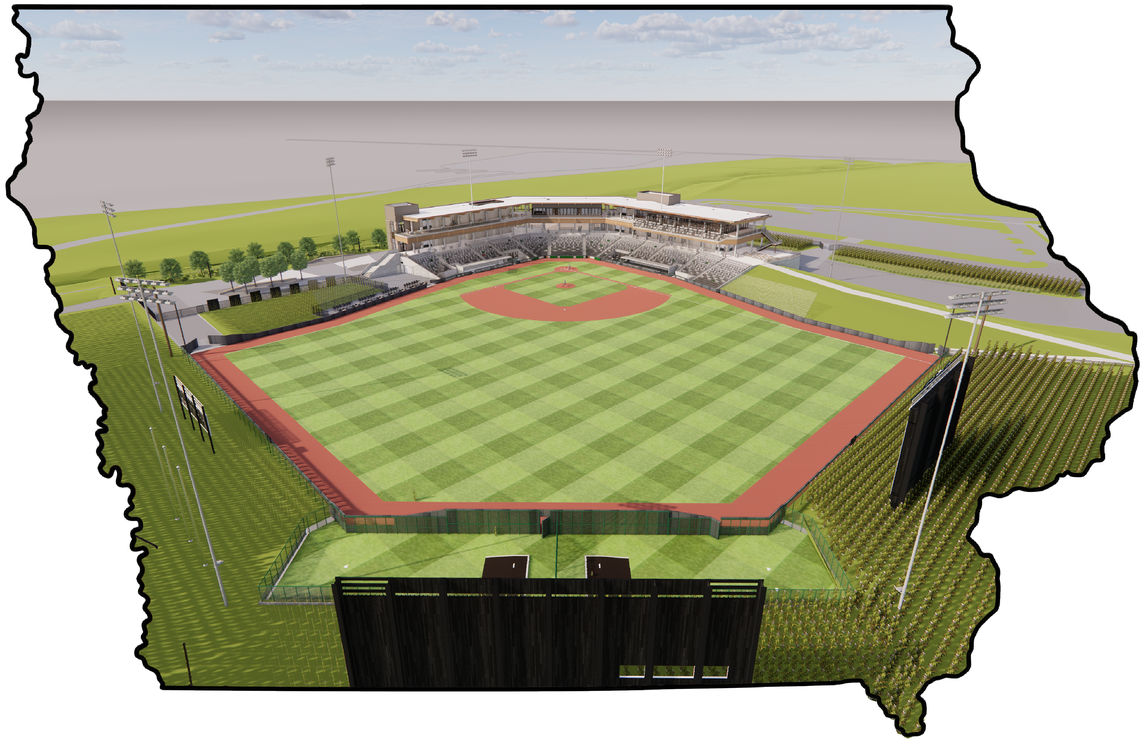

CIVIL

I hereby certify that this engineering document was prepared by me or under my direct personal supervision and that I am a duly licensed Professional Engineer under the laws of the State of Iowa.

My license expiration date is: 12/31/2023

Cody T. Austin License # P19027 Date

Pages or Sheets covered by this seal:

As listed in the Volume 1 Drawing Index under CIVIL

LICENSED PROFESSIONAL ENGINEER
CODY T. AUSTIN
19027
IOWA

ARCHITECT

I hereby certify that the portion of this technical submission described below was prepared by me or under my direct supervision and responsible charge. I am a duly licensed architect under the laws of the State of Iowa.

Jack Douglas Patton License # 14263

Signature
6/30/2023
License Expiration Date Date issued

Pages or Sheets covered by this seal:

As listed in the Volume 1 Drawing Index under LIFE SAFETY and ARCHITECTURE

LICENSED PROFESSIONAL ARCHITECT
JACK D. PATTON
03193
IOWA

# THIS IS IOWA BALLPARK, INC.
# FIELD OF DREAMS MOVIE SITE PROFESSIONAL BALLPARK
## 28995 LANSING ROAD
## DYERSVILLE, IA 52040

## BID PACKAGE 01

## BP01 - BID PACKAGE 01



PROJECT NUMBER: **R3005.252.04**
DATE: **2023-09-27**
DRAWING INDEX: **VOLUME 1 OF 2**

**GENERAL**

| NUMBER | NAME |
|---|---|
| G01.00.BP01 | COVER - BID PACKAGE 01 |
| G01.01.BP01 | VOLUME 1 DRAWING INDEX - BID PACKAGE 01 |

**CIVIL**

| NUMBER | NAME |
|---|---|
| C00.01 | ABBREVIATIONS AND LEGENDS |
| C01.01 | EXISTING CONDITIONS |
| C01.02 | DEMOLITION PLAN |
| C02.01 | EROSION CONTROL NOTES |
| C02.02 | EROSION CONTROL DETAILS |
| C02.10 | EROSION CONTROL PLAN |
| C02.20 | OVERALL GRADING PLAN |
| C02.21 | GRADING TYPICAL SECTIONS |
| C02.22 | GRADING TYPICAL SECTIONS |
| C02.23 | GRADING PLAN |
| C02.24 | GRADING PLAN |
| C02.25 | GRADING PLAN |
| C07.01 | STORM DETAILS |
| C07.02 | STORM DETAILS |
| C07.03 | STORM DETAILS |
| C07.10 | OVERALL STORM PLAN |
| C07.11 | STORM PLAN AND PROFILE |
| C07.12 | STORM PLAN AND PROFILE |
| C07.13 | STORM PLAN AND PROFILE |
| C07.14 | STORM PLAN AND PROFILE |
| C07.15 | STORM PLAN AND PROFILE |
| C07.16 | STORM PLAN AND PROFILE |
| C07.17 | STORM PLAN AND PROFILE |
| C07.18 | STORM PLAN AND PROFILE |
| C07.19 | STORM PLAN AND PROFILE |
| C07.20 | DETENTION POND DETAIL |

# ABBREVIATIONS

| | |
|---|---|
| Δ | CENTRAL ANGLE |
| A/C | AIR CONDITIONING(ER) |
| AC | ACRES |
| A.F.F. | ABOVE FINISHED FLOOR |
| AGG | AGGREGATE |
| AOH | ARROW ON HYDRANT |
| ARCH | ARCHITECTURAL |
| ASPH | ASPHALT |
| AVG | AVERAGE |
| B-B | B/C – B/C |
| B/C, BOC | BACK OF CURB |
| B/DITCH | BOTTOM OF DITCH |
| BFP | BACKFLOW PREVENTOR |
| B/L | BASE LINE |
| B/S | BOTTOM OF SLOPE |
| BLDG | BUILDING |
| B.M. | BENCH MARK |
| BOP | BEGINNING OF PROJECT |
| BOT | BOTTOM |
| BSMT | BASEMENT |
| BV | BUTTERFLY VALVE |
| C&G | CURB AND GUTTER |
| CATV | CABLE TELEVISION |
| CB | CATCH BASIN |
| C-C | CENTER TO CENTER |
| CF | CUBIC FEET |
| CH | CHORD |
| CH BRG | CHORD BEARING |
| CIP | CAST IRON PIPE |
| C-I-P | CAST-IN-PLACE |
| CISP | CAST IRON SOIL PIPE |
| CJ | CONTROL JOINT |
| ℄ OR CL | CENTERLINE |
| CLR | CLEAR |
| CMP | CORRUGATED METAL PIPE |
| CMU | CONCRETE MASONRY UNIT |
| CO | CLEAN OUT |
| COL | COLUMN |
| COMP | COMPACTED |
| CONC | CONCRETE |
| CONN | CONNECTION |
| CONST | CONSTRUCTION |
| CONT | CONTINUOUS |
| COR | CORNER |
| CP | CONTROL POINT |
| CPE | CORRUGATED POLYETHYLENE PIPE |
| CRST | CRUSHED STONE |
| CSP | CORRUGATED STEEL PIPE |
| CTRD | CENTERED |
| CTR | CENTER |
| CULT | CULTIVATED |
| CV | CHECK VALVE |
| CY | CUBIC YARD |
| D | DEGREE OF CURVE |
| DIA (ø) | DIAMETER |
| DIP | DUCTILE IRON PIPE |
| DN | DOWN |
| DRWY | DRIVEWAY |
| DS | DOWNSPOUT |
| DWG(S) | DRAWING(S) |
| DWL(S) | DOWEL(S) |
| E | EAST |
| E'LY | EASTERLY |
| EA | EACH |
| EJ | EXPANSION JOINT |
| EL | ELEVATION |
| ELEC | ELECTRICAL |
| ELEV | ELEVATOR |
| EMBED | EMBEDMENT |
| ENGR | ENGINEER |
| ENTR | ENTRANCE |
| EOP | END OF PROJECT |
| EOR | END OF RADIUS |
| E/P | EDGE OF PAVEMENT |
| EQ | EQUAL |
| E/S | EDGE OF SHOULDER |
| ESMT | EASEMENT |
| EST | ESTIMATE |
| EX | EXISTING |
| EXC | EXCAVATE/EXCAVATION |
| EXP | EXPANSION |
| EXT | EXTERIOR |
| EXTD | EXTEND |
| EW | EACH WAY |
| FD | FLOOR DRAIN |
| FDN | FOUNDATION |
| F.E. | FIELD ENTRANCE |
| FES | FLARED END SECTION |
| F-F | FACE TO FACE |
| FFE | FINISH FLOOR ELEVATION |
| FG | FORM GRADE |
| FIN GR | FINISHED GRADE |
| FL | FLOWLINE |
| FLG | FLANGE |
| FLR | FLOOR |
| FM | FORCE MAIN |
| FND | FOUND |
| FT | FOOT/FEET |
| FTG | FOOTING |
| FUT | FUTURE |
| FV | FIELD VERIFY |
| G | GUTTER |
| GC | GENERAL CONTRACTOR |
| GALV | GALVANIZED |
| GND | GROUND |
| GRAN | GRANULAR |
| GRD | GRADE |
| GV | GATE VALVE |
| HMA | HOT MIX ASPHALT |
| HORIZ | HORIZONTAL |
| HPT | HIGH POINT |
| HSD | HEADLIGHT STOPPING DISTANCE |
| HYD | HYDRANT |
| ID | INSIDE DIA/INSIDE DIM |
| IE | INVERT ELEVATION |
| IMP | IMPROVEMENTS |
| IN | INCHES |
| INV | INVERT |
| IP | IRON PIPE |
| JB | JUNCTION BOX |
| JT | JOINT/JOINT LENGTH |
| K | RATE OF VERT CURVATURE |
| L | LENGTH OF CURVE |
| LAT | LATERAL |
| LF | LINEAL FOOT |
| LONG | LONGITUDINAL |
| LP | LIGHT POLE |
| LPT | LOW POINT |
| LT | LEFT |
| MAX | MAXIMUM |
| ME | MATCH EXISTING |
| MH | MANHOLE |
| MIN | MINIMUM |
| MISC | MISCELLANEOUS |
| MON | MONUMENT |
| MP | MILE POST |
| N | NORTH |
| N/A | NOT APPLICABLE |
| NE'LY | NORTHEASTERLY |
| N'LY | NORTHERLY |
| NO/# | NUMBER |
| NIC | NOT IN CONTRACT |
| NTS | NOT TO SCALE |
| NW'LY | NORTHWESTERLY |
| OC | ON CENTER |
| OD | OUTSIDE DIAMETER |
| PC | POINT OF CURVE |
| PERF | PERFORATED |
| PI | POINT OF INTERSECTION |
| P/L | PROPERTY LINE |
| PM | PRINCIPAL MERIDIAN |
| POB | POINT OF BEGINNING |
| POC | POINT OF CURVE |
| POT | POINT OF TANGENT |
| PRC | POINT OF REVERSE CURVE |
| PRELIM | PRELIMINARY |
| PROP | PROPOSED |
| PRV | PRESSURE REDUCING VALVE |
| PT | POINT OF TANGENCY |
| PVC | POLYVINYL CHLORIDE |
| PVMT | PAVEMENT |
| QTY | QUANTITY |
| R | RADIUS |
| R&R | REMOVE & REPLACE |
| R&S | REMOVE & SALVAGE |
| RCB | REINFORCED CONCRETE BOX |
| RCAP | REINFORCED CONCRETE ARCH PIPE |
| RCP | REINFORCED CONCRETE PIPE |
| RD | ROAD |
| REBAR | REINFORCING BAR |
| REF | REFERENCE |
| REINF | REINFORCING/REINFORCED |
| REV | REVISION |
| RIM | RIM ELEVATION |
| ROW | RIGHT OF WAY |
| RP | RADIUS POINT |
| RS | RESILIENT SEAT |
| RT | RIGHT |
| S | SOUTH |
| S= | SUPERELEVATION |
| SAN | SANITARY |
| SANS | SANITARY SEWER |
| SB | SOIL BORING |
| SCH | SCHEDULE |
| SD | SUB DRAIN |
| SEC | SECTION |
| SE'LY | SOUTHEASTERLY |
| SF | SQUARE FOOT |
| S.F.D. | STEP FOOTING DOWN |
| SHT | SHEET |
| SIG. | SIGNAL |
| SIM. | SIMILAR |
| S'LY | SOUTHERLY |
| SOG | SLAB ON GRADE |
| SPEC | SPECIFICATION |
| SS | STAINLESS STEEL |
| SSD | STOPPING SIGHT DISTANCE |
| ST | STREET |
| STA | STATION |
| STD | STANDARD |
| STL | STEEL |
| STM | STORM |
| STMS | STORM SEWER |
| SW'LY | SOUTHWESTERLY |
| SY | SQUARE YARD |
| T | TANGENT LENGTH |
| T/B | TOP OF BANK |
| T/DITCH | TOP OF DITCH |
| T/C, TC | TOP OF CURB |
| T/GRAV | TOP OF GRAVEL |
| T/WALL | TOP OF WALL |
| T/P, TP | TOP OF PAVEMENT |
| T/S | TOP OF SLOPE |
| T/SUB | TOP OF SUBGRADE |
| T/W, TW | TOP OF WALK |
| T/WM | TOP OF WATER MAIN |
| T & B | TOP AND BOTTOM |
| T.O.B. | TOP OF BEAM |
| T.O.B.L. | TOP OF BRICK LEDGE |
| T.O.C. | TOP OF CONCRETE |
| T.O.E.F. | TOP OF EXISTING FOOTING |
| T.O.F. | TOP OF FOOTING |
| T.O.M. | TOP OF MASONRY |
| T.O.P. | TOP OF PIER |
| T.O.S. | TOP OF STEEL |
| TCE | TEMP CONSTRUCTION EASEMENT |
| TEL | TELEPHONE |
| TEMP | TEMPORARY |
| THK | THICK / THICKNESS |
| TWP | TOWNSHIP |
| TYP | TYPICAL |
| U | UTILITY |
| UAC | USE AS CONSTRUCTED |
| UE | UTILITY EASEMENT |
| UL | UNDERWRITERS LABORATORIES, INC. |
| ULFM | UNDERWRITERS LABORATORIES FACTORY MUTUAL |
| UNO | UNLESS NOTED OTHERWISE |
| VAR | VARIES |
| VC | VERTICAL CURVE |
| VCP | VITRIFIED CLAY PIPE |
| VER | VERIFY |
| VERT | VERTICAL |
| VOL | VOLUME |
| VPC | VERT POINT OF CURVE |
| VPI | VERT POINT OF INTERSECTION |
| VPT | VERT POINT OF TANGENCY |
| W | WEST |
| W/ | WITH |
| W'LY | WESTERLY |
| WM | WATER MAIN |
| W/O | WITHOUT |
| W.P. | WORKING POINT |
| WD | WOOD |
| WSO | WATER SHUT OFF |
| WV | WATER VALVE |
| WWF | WELDED WIRE FABRIC |
| YD | YARD |

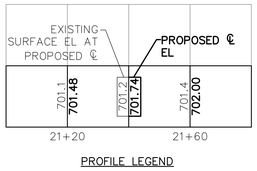


PROFILE LEGEND

# LEGEND

| EXISTING | | PROPOSED |
|---|---|---|
| | IRRIGATION LINE | |
| | CONSTRUCTION LIMITS | |
| | PROPERTY LINE | |
| | EASEMENT | |
| | SECTION LINE | |
| | QUARTER SECTION LINE | |
| | QUARTER QUARTER SECTION LINE | |
| | CENTERLINE | |
| D | STORM SEWER | D |
| SD | SUB DRAIN | SD |
| S | SANITARY SEWER | S |
| FM | FORCE MAIN | FM |
| W | WATER LINE | |
| G | GAS LINE | G |
| OHE | OVERHEAD ELECTRIC | OHE |
| E | UNDERGROUND ELECTRIC | E |
| OHT | OVERHEAD TELEPHONE | OHT |
| T | UNDERGROUND TELEPHONE | T |
| OHTV | OVERHEAD TELEVISION | OHTV |
| TV | UNDERGROUND TELEVISION | TV |
| FIB | FIBER OPTIC | FIB |
| X | WIRE FENCE | X |
| O | CHAINLINK FENCE | O |
| | WOOD FENCE | |
| 000 | CONTOUR LINE | 000 |
| | RAILROAD TRACKS | |
| | GUARD RAIL | |
| + 0.00 | SPOT ELEVATION | + 0.00 |
| | DIRECTION OF FLOW | |
| | TREE LINE | |
| | ELECTRICAL CONDUIT | |
| | IRRIGATION CONDUIT | |

| EXISTING | | PROPOSED |
|---|---|---|
| | CATCH BASIN | |
| | AREA INTAKE | |
| D | STORM MANHOLE | D |
| S | SANITARY MANHOLE | S |
| U | UTILITY MANHOLE | U |
| V | WATER VALVE MANHOLE | V |
| | FIRE HYDRANT | |
| | WATER SHUT OFF | |
| WV | WATER VALVE | WV |
| | YARD HYDRANT | |
| GV | GAS VALVE | GV |
| | SIGN | |
| | UTILITY POLE | |
| | UTILITY POLE WITH LIGHT | |
| | TRAFFIC SIGNAL POLE | |
| | GUY ANCHOR | |
| | LIGHT POLE | |
| | UTILITY PEDESTAL | |
| W | WELL | W |
| | MAILBOX | |
| | WATER LEVEL | |
| | BOLLARD | |
| | SOIL BORING | |
| | POST INDICATOR VALVE | |
| | DECIDUOUS TREE W/ TRUNK DIA. | |
| | CONIFEROUS TREE W/ TRUNK DIA. | |
| | SHRUB OR BUSH | |
| | Light Pole | |
| | CONCRETE PAVEMENT TYPE 3 | |
| | CONCRETE PAVEMENT TYPE 2 | |
| | AGG TYPE 1 | |
| | AGG TYPE 2 | |
| | AGG TYPE 3 | |
| | GRAVEL SURFACE | |
| | CONCRETE PAVEMENT TYPE 1 | |
| | CONCRETE PAVEMENT TYPE 4 | |

# PROPOSED IRRIGATION LEGEND

| | PROPOSED |
|---|---|
| 6" SPRAY HEAD (PART CIRCLE) | |
| 6" SPRAY HEAD (FULL CIRCLE) | |
| 12" SPRAY HEAD (PART CIRCLE) | |
| 12" SPRAY HEAD (Full Circle) | |
| 6" ROTOR WITH RISER (PART CIRCLE) | |
| 6" ROTOR WITH RISER (FULL CIRCLE) | |
| 12" ROTOR WITH RISER (PART CIRCLE) | |
| 4" ROTOR WITH RISER (PART CIRCLE) | |
| 4" ROTOR WITH RISER (ADJUSTABLE ARC) | |
| RISER MOUNT (ADJUSTABLE ARC) | |
| ELECTRIC VALVE | |
| L2 QUICK COUPLING VALVE | |
| ISOLATION GATE VALVE | |
| CL200 PVC (PW) | |
| CL200 PVC (NPW) | |
| CL200 PVC LATERAL PIPE | |
| CL200 PVC SLEEVE | |
| 3" POINT OF CONNECTION (PW) | POC-1 |
| EX IRRIGATION CONTROLLER | C-1 |
| NEW IRRIGATION CONTROLLER | C-2 |
| IRRIGATION CONTROL CABLE | |
| WINTERIZATION PORT | |

NOTE: SEE SHEET LI1.00 FOR MORE INFORMATION

# SURVEY

| | |
|---|---|
| ■ | FOUND REBAR |
| ● | FOUND IRON PIPE |
| ○ | SET REBAR |

BID PACKAGE 01

NOT FOR CONSTRUCTION

FIELD OF DREAMS MOVIE SITE PROFESSIONAL BALLPARK


ARCHITECT
RDG Planning & Design
301 Grand Avenue
Des Moines, IA 50309
Phone: 515-288-3141

LANDSCAPE ARCH
RDG Planning & Design
301 Grand Avenue
Des Moines, IA 50309
Phone: 515-288-3141

CIVIL
Cryer Design Co.
137 Main Street, Ste. 100
Dyersville, IA 52040
Phone: 563-582-2464

IRRIGATION
FEG Design Group
167 South Lexington Street
Schaumburg, IL 60193
Phone: 608-989-1889

STRUCTURAL
Weber & Weber and Assoc. Inc.
201 East Kennedy Boulevard, Suite 100
Dyersville, IA 52040
Phone: 913-221-2424

FP/PMET
Henderson Engineers, Inc.
8345 Lenexa Drive, Suite 300
Lenexa, KS 66214
Phone: 913-742-0000

LIGHTING
RDG Planning & Design
301 Grand Avenue
Des Moines, IA 50309
Phone: 515-288-3141

AV / BROADCAST
Henderson Engineers, Inc.
8345 Lenexa Drive, Suite 300
Lenexa, KS 66214
Phone: 913-742-0000

FOOD & BEVERAGE
Rapids Foodservice
6201 South Gateway Drive
Cedar Rapids, IA 52404
Phone: 319-447-3515

ACOUSTICAL
Henderson Engineers, Inc.
8345 Lenexa Drive, Suite 300
Lenexa, KS 66214
Phone: 913-742-0000

CMaR
Mortenson Construction Co., Inc.
3335 French Court SW
Cedar Rapids, IA 52404
Phone: 319-286-5000


RDG PLANNING • DESIGN

THIS IS IOWA BALLPARK, INC.
CITY OF DYERSVILLE

28995 LANSING RD
DYERSVILLE, IA 52040

KEY PLAN

| ISSUANCE | | DATE |
|---|---|---|
| BP01 | BID PACKAGE 01 | 2023-09-27 |

PROJECT NO: R3005.252.04



ABBREVIATIONS AND LEGENDS

C00.01

SHEET SIZE: 30" X 42"
PDF Printed: 9/27/2023 4:38:09 PM

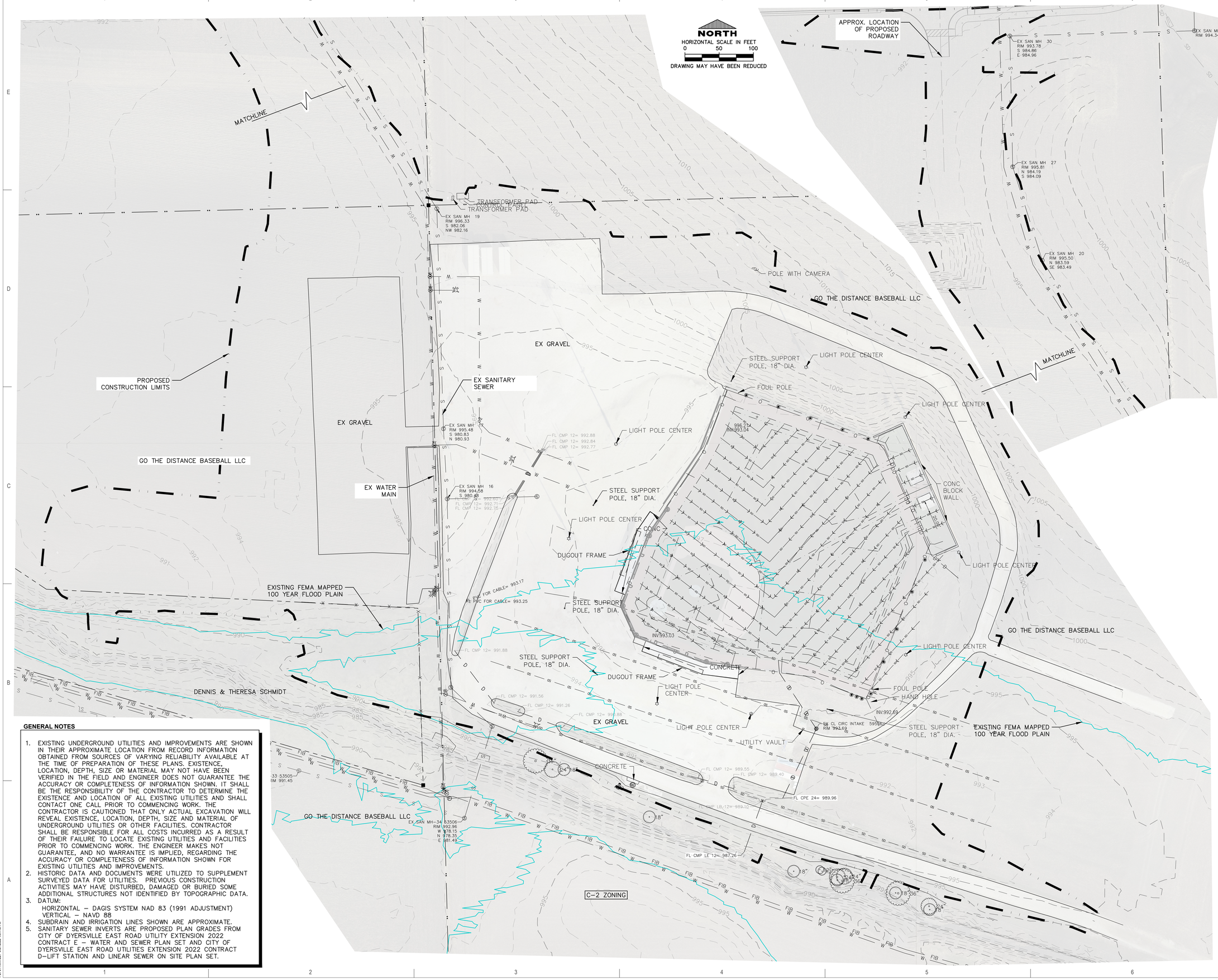


## GENERAL NOTES

1. EXISTING UNDERGROUND UTILITIES AND IMPROVEMENTS ARE SHOWN IN THEIR APPROXIMATE LOCATION FROM RECORD INFORMATION OBTAINED FROM SOURCES OF VARYING RELIABILITY AVAILABLE AT THE TIME OF PREPARATION OF THESE PLANS. EXISTENCE, LOCATION, DEPTH, SIZE OR MATERIAL MAY NOT HAVE BEEN VERIFIED IN THE FIELD AND ENGINEER DOES NOT GUARANTEE THE ACCURACY OR COMPLETENESS OF INFORMATION SHOWN. IT SHALL BE THE RESPONSIBILITY OF THE CONTRACTOR TO DETERMINE THE EXISTENCE AND LOCATION OF ALL EXISTING UTILITIES AND SHALL CONTACT ONE CALL PRIOR TO COMMENCING WORK. THE CONTRACTOR IS CAUTIONED THAT ONLY ACTUAL EXCAVATION WILL REVEAL EXISTENCE, LOCATION, DEPTH, SIZE AND MATERIAL OF UNDERGROUND UTILITIES OR OTHER FACILITIES. CONTRACTOR SHALL BE RESPONSIBLE FOR ALL COSTS INCURRED AS A RESULT OF THEIR FAILURE TO LOCATE EXISTING UTILITIES AND FACILITIES PRIOR TO COMMENCING WORK. THE ENGINEER MAKES NOT GUARANTEE, AND NO WARRANTEE IS IMPLIED, REGARDING THE ACCURACY OR COMPLETENESS OF INFORMATION SHOWN FOR EXISTING UTILITIES AND IMPROVEMENTS.
2. HISTORIC DATA AND DOCUMENTS WERE UTILIZED TO SUPPLEMENT SURVEYED DATA FOR UTILITIES. PREVIOUS CONSTRUCTION ACTIVITIES MAY HAVE DISTURBED, DAMAGED OR BURIED SOME ADDITIONAL STRUCTURES NOT IDENTIFIED BY TOPOGRAPHIC DATA.
3. DATUM:
   HORIZONTAL – DAGIS SYSTEM NAD 83 (1991 ADJUSTMENT)
   VERTICAL – NAVD 88
4. SUBDRAIN AND IRRIGATION LINES SHOWN ARE APPROXIMATE.
5. SANITARY SEWER INVERTS ARE PROPOSED PLAN GRADES FROM CITY OF DYERSVILLE EAST ROAD UTILITY EXTENSION 2022 CONTRACT E – WATER AND SEWER PLAN SET AND CITY OF DYERSVILLE EAST ROAD UTILITIES EXTENSION 2022 CONTRACT D–LIFT STATION AND LINEAR SEWER ON SITE PLAN SET.

SHEET SIZE: 30" X 42"
PDF: PRINTED: 9/27/2023 4:31:45 PM

# FIELD OF DREAMS MOVIE SITE PROFESSIONAL BALLPARK

**NOT FOR CONSTRUCTION**

BID PACKAGE 01


**ARCHITECT** RDG Planning & Design, 301 Grand Avenue, Des Moines, IA 50309, Phone: 515-288-3141

**LANDSCAPE ARCH** RDG Planning & Design, 301 Grand Avenue, Des Moines, IA 50309, Phone: 515-288-3141

**CIVIL** Cryer Design Co., 137 Main Street, Ste. 100, Dyersville, IA 52040, Phone: 563-506-2464

**IRRIGATION** FEG Design Group, 167 South Lexington Street, Harrisburg, PA 17603, Phone: 608-988-1888

**STRUCTURAL** Weber & Weyers and Assoc. Inc., 201 East Kennedy Boulevard, Suite 700, Lake Mary, FL 32746, Phone: 813-221-2424

**FP/PMET** Henderson Engineers, Inc., 8345 Lenexa Drive, Suite 300, Lenexa, KS 66214, Phone: 913-742-5000

**LIGHTING** RDG Planning & Design, 301 Grand Avenue, Des Moines, IA 50309, Phone: 515-288-3141

**AV / BROADCAST** Henderson Engineers, Inc., 8345 Lenexa Drive, Suite 300, Lenexa, KS 66214, Phone: 913-742-5000

**FOOD & BEVERAGE** Rapids Foodservice, 6201 South Gateway Drive, Cedar Rapids, IA 52404, Phone: 319-447-3515

**ACOUSTICAL** Henderson Engineers, Inc., 8345 Lenexa Drive, Suite 300, Lenexa, KS 66214, Phone: 913-742-5000

**CM&R** Mortenson Construction Co., Inc., 335 French Court SW, Cedar Rapids, IA 52404, Phone: 319-286-5000


RDG PLANNING • DESIGN

**THIS IS IOWA BALLPARK, INC.**
**CITY OF DYERSVILLE**
28995 LANSING RD
DYERSVILLE, IA 52040

KEY PLAN

| ISSUANCE | | DATE |
|---|---|---|
| BP01 | BID PACKAGE 01 | 2023-09-27 |

PROJECT NO: **R3005.232.04**



**EXISTING CONDITIONS**

C01.01

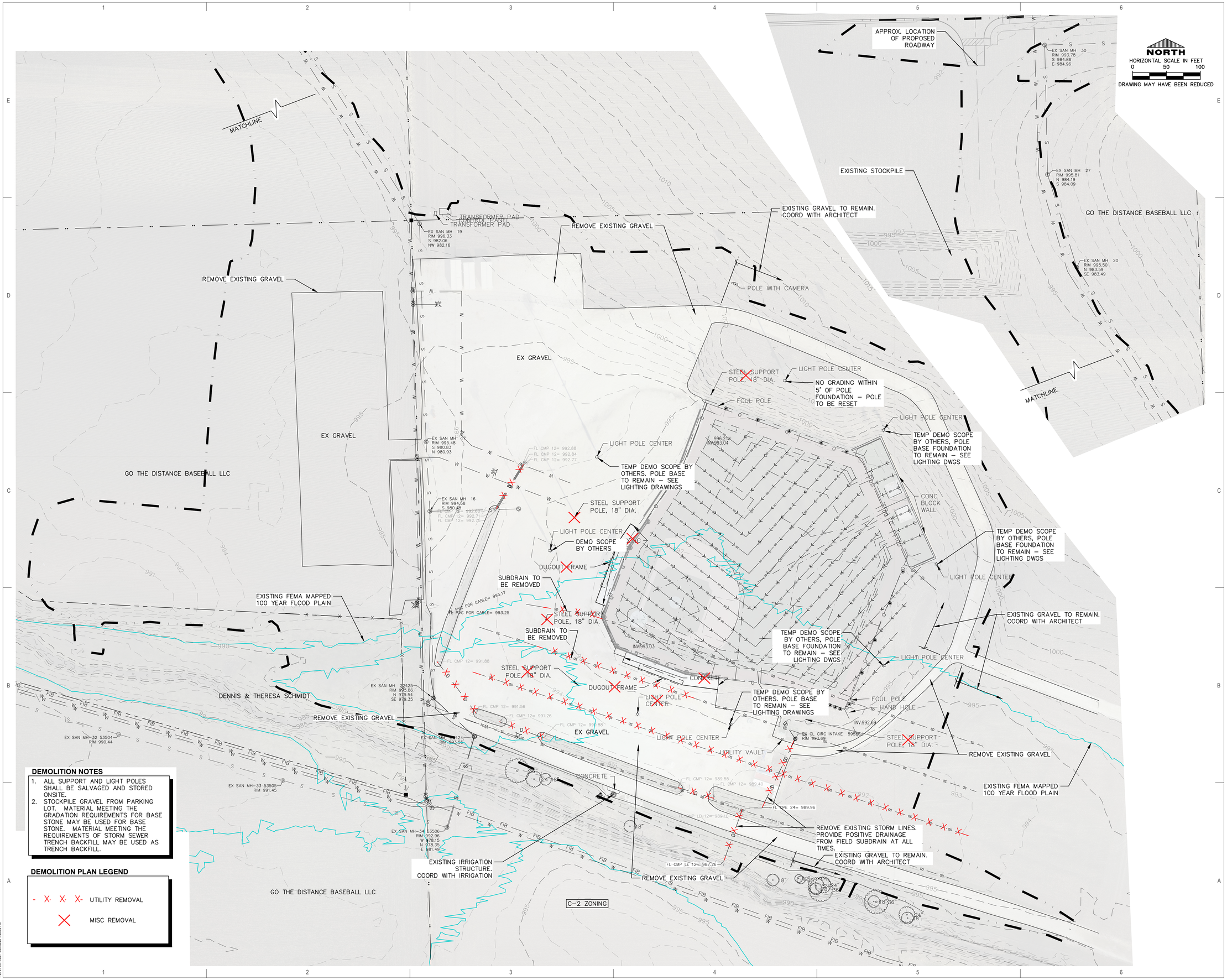


## DEMOLITION NOTES

1. ALL SUPPORT AND LIGHT POLES SHALL BE SALVAGED AND STORED ONSITE.
2. STOCKPILE GRAVEL FROM PARKING LOT. MATERIAL MEETING THE GRADATION REQUIREMENTS FOR BASE STONE MAY BE USED FOR BASE STONE. MATERIAL MEETING THE REQUIREMENTS OF STORM SEWER TRENCH BACKFILL MAY BE USED AS TRENCH BACKFILL.

## DEMOLITION PLAN LEGEND

- X X X - UTILITY REMOVAL
- X MISC REMOVAL

SHEET SIZE: 30" X 42"
PDF's PRINTED: 9/27/2023 4:33:38 PM

NOT FOR CONSTRUCTION

BID PACKAGE 01

**ARCHITECT**
RDG Planning & Design
301 Grand Avenue
Des Moines, Iowa 50309
Phone: 515-288-3141

**LANDSCAPE ARCH**
RDG Planning & Design
301 Grand Avenue
Des Moines, Iowa 50309
Phone: 515-288-3141

**CIVIL**
Cryer Design Co.
137 Main Street, Ste. 100
Dyersville, Iowa 52040
Phone: 563-506-2464

**IRRIGATION**
FEG Design Group
167 South Lexington Street
Harrisonville, Missouri 64701
Phone: 816-884-1888

**STRUCTURAL**
Weber & Weaver-Hart Assoc. Inc.
201 East Kennedy Boulevard, Suite 700
Lansing, Iowa 52151
Phone: 913-221-2424

**FPP/MET**
Henderson Engineers, Inc.
8345 Lenexa Drive, Suite 300
Lenexa, Kansas 66214
Phone: 913-742-5000

**LIGHTING**
RDG Planning & Design
301 Grand Avenue
Des Moines, Iowa 50309
Phone: 515-288-3141

**AV / BROADCAST**
Henderson Engineers, Inc.
8345 Lenexa Drive, Suite 300
Lenexa, Kansas 66214
Phone: 913-742-5000

**FOOD & BEVERAGE**
Rapids Foodservice
6201 South Gateway Drive
Cedar Rapids, Iowa 52404
Phone: 319-447-3515

**ACOUSTICAL**
Henderson Engineers, Inc.
8345 Lenexa Drive, Suite 300
Lenexa, Kansas 66214
Phone: 913-742-5000

**CMaR**
Mortenson Construction Co., Inc.
3335 French Court SW
Cedar Rapids, Iowa 52404
Phone: 319-286-5000

RDG PLANNING • DESIGN

# FIELD OF DREAMS MOVIE SITE PROFESSIONAL BALLPARK

**THIS IS IOWA BALLPARK, INC.**
**CITY OF DYERSVILLE**
28995 LANSING RD
DYERSVILLE, IA 52040

KEY PLAN

| ISSUANCE | DATE |
|---|---|
| BP01 BID PACKAGE 01 | 2023-09-27 |

PROJECT NO: **R3005.252.04**



**DEMOLITION PLAN**

C01.02

## SITE DESCRIPTION

1. THIS STORM WATER POLLUTION PREVENTION PLAN (SWPPP) IS FOR CONSTRUCTION ACTIVITIES ASSOCIATED WITH THE CONSTRUCTION OF FIELD OF DREAMS MOVIE SITE PROFESSIONAL BALLPARK, INCLUDING CLEARING, EXCAVATION AND GRADING, GRADING FOR DRIVEWAY, BUILDING, INSTALLATION OF DRAINAGE STRUCTURES, AND PREPARATION FOR SEEDING, LOCATED IN SEC. 22 & 27, T.89N., R.2W, DUBUQUE COUNTY, IOWA
2. THIS SWPPP COVERS AN ESTIMATED 21.0 ACRES WITH AN ESTIMATED 21.0 ACRES BEING DISTURBED.
3. THE SWPPP IS LOCATED PRIMARILY IN THE WAPSIE LOAM, RACINE LOAM, WINNESHIEK LOAM AND CLYDE–FLOYD COMPLEX SOIL SERIES. THE ESTIMATED RUNOFF COEFFICIENT (C) FOR THE SITE AFTER COMPLETION WILL BE 0.70.
4. REFER TO THIS SHEET FOR SITE MAP INDICATING DRAINAGE PATTERNS, TYPICAL SLOPES, AREAS OF SOIL DISTURBANCE, MAJOR STRUCTURAL AND NONSTRUCTURAL CONTROLS, ETC.
5. RUNOFF FROM THIS SITE WILL BE DISCHARGED TO HEWITT CREEK, TO NORTH FORK MAQUOKETA RIVER, TO MAQUOKETA RIVER, TO THE MISSISSIPPI RIVER.

## CONTROLS

1. PRIOR TO BEGINNING GRADING, EXCAVATION OR CLEARING AND GRUBBING OPERATIONS, SILT FENCE SHALL BE PLACED ALONG THE PERIMETER OF ALL AREAS TO BE DISTURBED AT ANY LOCATION WHERE RUNOFF CAN MOVE OFFSITE.
2. VEGETATION IN AREAS NOT INCLUDED IN THE CONSTRUCTION AREA SHALL BE PRESERVED.
3. AS AREAS REACH THEIR FINAL GRADE, THE LOCATION OF EROSION CONTROLS MAY NEED TO BE CHANGED OR ADDITIONAL CONTROLS MAY NEED TO BE PLACED.
4. OFF–SITE VEHICLE TRACKING OF SEDIMENTS SHALL BE MINIMIZED. ROADWAYS ADJACENT TO THE PROJECT SITE SHALL BE CLEANED OF SEDIMENT DAILY.
5. STABILIZATION PRACTICES, INCLUDING TEMPORARY OR PERMANENT SEEDING AND/OR MULCHING SHALL BE INITIATED IMMEDIATELY ON ALL DISTURBED AREAS IF CONSTRUCTION ACTIVITY WILL NOT RESUME IN THOSE AREAS WITHIN 14–DAYS.
6. CONTRACTOR DISPOSAL OF UNUSED CONSTRUCTION MATERIALS AND CONSTRUCTION MATERIAL WASTES SHALL COMPLY WITH APPLICABLE STATE AND LOCAL WASTE DISPOSAL, SANITARY SEWER OR SEPTIC SYSTEM REGULATIONS.
7. STOCKPILE AREAS WHICH REMAIN FOR MORE THAN 7 DAYS SHALL BE SEEDED, MULCHED AND ENCLOSED BY SILT FENCE.
8. SLOPES STEEPER THAN 10:1 AND LONGER THAN 20 FEET SHALL USE EROSION AND SEDIMENT CONTROL BLANKET ALONG ROADWAY SHOULDER AND AT FES.
9. DUST CONTROL MEASURES SHALL BE EMPLOYED IF DUST IS CREATED AND THERE IS POTENTIAL FOR AIR AND/OR WATER POLLUTION FROM DUST TRANSPORTED BY WINDS. DUST CONTROL MEASURES SUCH AS SPRINKLING/IRRIGATION, MULCHING, OR OTHER APPROPRIATE MEASURES SHALL BE EMPLOYED AS NECESSARY.
10. THE CONTRACTOR SHALL PLACE ANY OTHER CONTROLS CONSISTENT WITH CURRENT BMP'S AS DEEMED NECESSARY TO CONTROL RUNOFF FROM EXPOSED SITES.
11. THE WORK WILL BE COMPLETED WITH THE ESTABLISHMENT OF PERMANENT PERENNIAL VEGETATION WITH A DENSITY OF 70% OR EQUIVALENT STABILIZATION MEASURES ON ALL DISTURBED AREAS.
12. CONTRACTOR MAY LOCATE A PORTABLE REST ROOM FACILITY ONSITE IN A LOCATION WHERE CONTACT WITH STORM WATER DISCHARGE IS MINIMIZED. WASTES SHALL BE COLLECTED AND DISPOSED OF IN COMPLIANCE WITH LOCAL AND STATE REGULATIONS.

## MAINTENANCE

1. THE CONTRACTOR IS REQUIRED TO MAINTAIN ALL TEMPORARY EROSION CONTROL MEASURES IN PROPER WORKING ORDER, INCLUDING CLEANING, REPAIRING OR REPLACING THEM THROUGHOUT THE CONTRACT PERIOD. CLEANING OF SILT CONTROL DEVICES SHALL BEGIN WHEN THE FEATURES HAVE LOST 50% OF THEIR CAPACITY OR WHEN THE SEDIMENT LEVEL REACHES 1/3 OF THE BARRIER HEIGHT.

## INSPECTIONS

1. QUALIFIED PERSONNEL (PROVIDED BY THE DISCHARGER) SHALL INSPECT DISTURBED AREAS OF THE CONSTRUCTION SITE THAT HAVE NOT BEEN STABILIZED WITH A PERENNIAL, VEGETATIVE COVER OF SUFFICIENT DENSITY TO PRECLUDE EROSION AT LEAST ONCE EVERY SEVEN CALENDAR DAYS.
2. DISTURBED AREAS AND AREAS USED FOR STORAGE OF MATERIALS SHALL BE INSPECTED FOR EVIDENCE OF POLLUTANTS ENTERING THE DRAINAGE SYSTEM. EROSION AND SEDIMENT CONTROL MEASURES SHALL BE OBSERVED TO ENSURE THAT THEY ARE OPERATING PROPERLY. LOCATIONS WHERE VEHICLES ENTER OR EXIT THE SITE SHALL BE INSPECTED FOR OFFSITE SEDIMENT TRACKING. DISCHARGE LOCATIONS SHALL BE INSPECTED TO ASCERTAIN WHETHER EROSION CONTROL MEASURES ARE EFFECTIVE IN PREVENTING SIGNIFICANT IMPACTS TO RECEIVING WATERS.
3. THE CONTRACTOR SHALL IMMEDIATELY BEGIN CORRECTIVE ACTION ON ALL DEFICIENCIES FOUND.
4. THIS INSPECTION MAY REQUIRE REVISIONS TO THE DESCRIPTION OF POTENTIAL POLLUTANT SOURCES AND POLLUTION PREVENTION MEASURES IDENTIFIED IN THE PLAN. THE CONTRACTOR SHALL IMPLEMENT ALL REVISIONS TO THE PLAN DEEMED NECESSARY AND COMPLETE SUCH CHANGES TO THE PLAN WITHIN 7 CALENDAR DAYS OF THE INSPECTION.
5. A WRITTEN REPORT SUMMARIZING THE SCOPE OF THE INSPECTION, THE NAMES AND QUALIFICATIONS OF THE INSPECTORS, THE DATE, AND THE OBSERVATIONS MADE AND ACTIONS TAKEN SHALL BE MADE AND RETAINED AS PART OF THE SWPPP. THE REPORT SHALL BE SIGNED IN ACCORDANCE WITH PART VI.G OF THE PERMIT.

## CERTIFICATION

1. THE PLAN SHALL BE SIGNED IN ACCORDANCE WITH THE REQUIREMENTS OF THE NPDES GENERAL PERMIT NO. 2 AND BE RETAINED AT THE CONSTRUCTION SITE FROM THE DATE CONSTRUCTION ACTIVITIES BEGIN TO THE DATE OF FINAL STABILIZATION.
2. ALL CONTRACTORS AND SUBCONTRACTORS WHOSE WORK IS A SOURCE OF POTENTIAL POLLUTION AS DEFINED IN THIS SWPPP MUST SIGN THE CERTIFICATION STATEMENT.

## OWNER'S CERTIFICATION

I CERTIFY UNDER PENALTY OF LAW THAT THIS DOCUMENT AND ALL ATTACHMENTS WERE PREPARED UNDER MY DIRECTION OR SUPERVISION IN ACCORDANCE WITH A SYSTEM DESIGNED TO ASSURE THAT QUALIFIED PEOPLE PROPERLY GATHERED AND EVALUATED THE INFORMATION SUBMITTED. BASED UPON MY INQUIRY OF THE PERSON OR PERSONS WHO MANAGE THE SYSTEM, OR THOSE PERSONS DIRECTLY RESPONSIBLE FOR GATHERING THE INFORMATION, THE INFORMATION SUBMITTED IS, TO THE BEST OF MY KNOWLEDGE AND BELIEF, TRUE ACCURATE AND COMPLETE. I FURTHER CERTIFY THAT THE TERMS AND CONDITIONS OF THE GENERAL PERMIT WILL BE MET. I AM AWARE THAT THERE ARE SIGNIFICANT PENALTIES FOR SUBMITTING FALSE INFORMATION, INCLUDING THE POSSIBILITY OF FINE AND IMPRISONMENT FOR KNOWING VIOLATIONS.

NAME: _____ TITLE: _____
PRINTED

SIGNATURE: _____ DATE: _____

## CONTRACTOR'S CERTIFICATION

I CERTIFY UNDER PENALTY OF LAW THAT I UNDERSTAND THE TERMS AND CONDITIONS OF THE GENERAL NATIONAL POLLUTANT DISCHARGE ELIMINATION SYSTEM (NPDES) PERMIT THAT AUTHORIZES THE STORM WATER DISCHARGES ASSOCIATED WITH INDUSTRIAL ACTIVITY FROM THE CONSTRUCTION SITE AS PART OF THIS CERTIFICATION. FURTHER, BY MY SIGNATURE, I UNDERSTAND THAT I AM BECOMING A CO–PERMITEE, ALONG WITH THE OWNER(S) AND OTHER CONTRACTORS AND SUBCONTRACTORS SIGNING SUCH CERTIFICATIONS, TO THE IOWA DEPARTMENT OF NATURAL RESOURCES NPDES GENERAL PERMIT NO. 2 FOR "STORM WATER DISCHARGES ASSOCIATED WITH INDUSTRIAL ACTIVITY FOR CONSTRUCTION ACTIVITIES" AT THE IDENTIFIED SITE. AS A CO–PERMITEE, I UNDERSTAND THAT I, AND MY COMPANY, ARE LEGALLY REQUIRED UNDER THE CLEAN WATER ACT AND THE CODE OF IOWA, TO ENSURE COMPLIANCE WITH THE TERMS AND CONDITIONS OF THE STORM WATER POLLUTION PREVENTION PLAN DEVELOPED UNDER THIS NPDES PERMIT AND THE TERMS OF THIS NPDES PERMIT.

CONSTRUCTION ACTIVITY ASSOCIATED WITH THE CONSTRUCTION OF FIELD OF DREAMS MOVIE SITE PROFESSIONAL BALLPARK, DUBUQUE COUNTY, IOWA.

_____
NAME TITLE DATE
CONTRACTING FIRM: _____
ADDRESS: _____ TELEPHONE: _____

_____
NAME TITLE DATE
CONTRACTING FIRM: _____
ADDRESS: _____ TELEPHONE: _____

## SOIL COMPACTION/TOPSOIL PRESERVATION

THE PERMITTEE(S) SHALL MINIMIZE SOIL COMPACTION AND, UNLESS INFEASIBLE, PRESERVE TOPSOIL. "INFEASIBLE" SHALL MEAN NOT TECHNOLOGICALLY POSSIBLE, OR NOT ECONOMICALLY PRACTICABLE AND ACHIEVABLE IN LIGHT OF THE BEST INDUSTRY PRACTICES. "UNLESS INFEASIBLE, PRESERVE TOPSOIL" SHALL MEAN THAT, UNLESS INFEASIBLE, TOPSOIL FROM ANY AREAS OF THE SITE WHERE THE SURFACE OF THE GROUND FOR THE PERMITTED CONSTRUCTION ACTIVITIES IS DISTURBED SHALL REMAIN WITHIN THE AREA COVERED BY THE APPLICABLE GENERAL PERMIT NO. 2 AUTHORIZATION. MINIMIZING SOIL COMPACTION IS NOT REQUIRED WHERE THE INTENDED FUNCTION OF A SPECIFIC AREA OF THE SITE DICTATES THAT IT BE COMPACTED. PRESERVING TOPSOIL IS NOT REQUIRED WHERE THE INTENDED FUNCTION OF A SPECIFIC AREA OF THE SITE DICTATES THAT TOPSOIL BE DISTURBED OR REMOVED. SEE PART V.D.2.A.(2).(C) OF THE PERMIT FOR COMPLETE REQUIREMENTS.

## KEEPING PLANS CURRENT

THIS SWPPP WAS PREPARED PRIOR TO THE COMMENCEMENT OF SOIL DISTURBING ACTIVITIES. THE PERMITTEE SHALL AMEND THE PLAN WHENEVER THERE IS A CHANGE IN DESIGN, CONSTRUCTION, OPERATION, OR MAINTENANCE, WHICH HAS A SIGNIFICANT EFFECT ON THE POTENTIAL FOR THE DISCHARGE OF POLLUTANTS TO THE WATERS OF THE UNITED STATES AND WHICH HAS NOT BEEN ADDRESSED IN THE PLAN OR IF THE SWPPP PROVES TO BE INEFFECTIVE. SEE PART IV.C OF THE PERMIT FOR COMPLETE REQUIREMENTS REGARDING UPDATING OF THE SWPPP.

## GENERAL NOTES

1. ALL CONTRACTORS/SUBCONTRACTORS SHALL CONDUCT THEIR OPERATIONS IN A MANNER THAT MINIMIZES EROSION AND PREVENTS SEDIMENT FROM LEAVING THE PROJECT SITE. THE PRIME CONTRACTOR SHALL BE RESPONSIBLE FOR COMPLIANCE AND IMPLEMENTATION OF THE STORM WATER POLLUTION PREVENTION PLAN (SWPPP) FOR THEIR ENTIRE CONTRACT. THIS RESPONSIBILITY SHALL BE FURTHER SHARED WITH SUBCONTRACTORS WHOSE WORK IS A SOURCE OF POTENTIAL POLLUTION AS DEFINED IN THIS SWPPP.
2. A "NOTICE OF INTENT FOR NPDES COVERAGE UNDER GENERAL PERMIT NO. 2" HAS BEEN FILED WITH THE IOWA DEPARTMENT OF NATURAL RESOURCES.
3. NOTICE OF DISCONTINUATION
   WITHIN 30 DAYS AFTER FINAL STABILIZATION, THE OPERATOR OR OWNER OF THE FACILITY SHALL SUBMIT A NOTICE OF DISCONTINUATION TO THE IOWA DEPARTMENT OF NATURAL RESOURCES.
4. NON–STORM WATER DISCHARGES
   NON–STORM DISCHARGES MAY OCCUR FROM SUBSURFACE DRAINS INCORPORATED INTO THE PROJECT. THESE DISCHARGES WILL BE CONTROLLED BY STABILIZED OUTLETS.

## SEQUENCE

1. INSTALL CONSTRUCTION ENTRANCE
2. PLACE PERIMETER AND DOWNSLOPE CONTROLS
3. PROCEED WITH GRADING AND EXCAVATION
4. COVER OR STABILIZE DISTURBED AREAS AS SOON AS POSSIBLE
5. SEED DISTURBED AREA AS SOON AS POSSIBLE ONCE IT IS BROUGHT TO FINAL GRADE
6. MAINTAIN ALL TEMPORARY PERIMETER CONTROLS UNTIL ALL UPSTREAM AREAS ARE FINALLY STABILIZED.

## EROSION CONTROL LEGEND

**TEMPORARY**

- SF — PERIMETER CONTROL (STRAW WATTLES, FILTER SOCKS & SILT FENCE ARE GENERALLY INTERCHANGEABLE)
- CW — CONCRETE WASHOUT
- CE — CONSTRUCTION ENTRANCE
- TM — MULCHING
- TS — SEEDING
- CB — COMPOST BLANKET
- DC, RD — DITCH CHECK (ROCK DAM)
- ST — SEDIMENT TRAP
- IP — INLET PROTECTION
- DC — DUST CONTROL

**TEMPORARY**

- ROLLED EROSION CONTROL PRODUCT (RECP) PER PLAN
- T — STREAM CROSSING
- CRS — CONSTRUCTION ROAD STABILIZATION
- TD — TEMPORARY DIVERSION
- LEVEL SPREADER

**PERMANENT**

- PS — SEEDING
- S — SODDING
- SFM — SEED, FERTILIZER & MULCH
- OP — OUTLET PROTECTION
- RS — REVETMENT SLOPE PROTECTION
- SDI — SOD DROP INLET PROTECTION
- CD — CHECK DAM
- SC — STONE CHECK
- SB — SEDIMENT BASIN
- SURFACE ROUGHENING
- TURF REINFORCEMENT MAT (TRM)
- SD — SLOPE DRAIN
- PD — PERMANENT DIVERSION
- LEVEL SPREADER

**PERMANENT**

- V — VEGETATIVE STREAMBANK STABILIZATION
- S — STRUCTURAL STREAMBANK STABILIZATION
- RR — RIP RAP LINED CHANNEL
- GL — GRASS LINED CHANNEL (_____) MATERIAL REQUIRED

NOT FOR CONSTRUCTION

BID PACKAGE 01

FIELD OF DREAMS MOVIE SITE PROFESSIONAL BALLPARK


**ARCHITECT** RDG Planning & Design, 301 Grand Avenue, Des Moines, IA 50309, Phone: 515-288-3141
**LANDSCAPE ARCH** RDG Planning & Design, 301 Grand Avenue, Des Moines, IA 50309, Phone: 515-288-3141
**CIVIL** Cryer Design Co., 137 Main Street, Ste. 100, Dubuque, IA 52001, Phone: 563-582-2464
**IRRIGATION** FEG Design Group, 167 South Lexington Street, Huntington, IN 46750, Phone: 608-981-1889
**STRUCTURAL** Weber & Weaver and Assoc. Inc., 201 East Kennedy Boulevard, Suite 100, Davenport, IA 52801, Phone: 913-221-2424
**FP/PMET** Henderson Engineers, Inc., 8345 Lenexa Drive, Suite 300, Lenexa, KS 66214, Phone: 913-742-5000
**LIGHTING** RDG Planning & Design, 301 Grand Avenue, Des Moines, IA 50309, Phone: 515-288-3141
**AV / BROADCAST** Henderson Engineers, Inc., 8345 Lenexa Drive, Suite 300, Lenexa, KS 66214, Phone: 913-742-5000
**FOOD & BEVERAGE** Fluidis Foodservice, 6201 South Gateway Drive, Milwaukee, WI 53213, Phone: 319-447-3315
**ACOUSTICAL** Henderson Engineers, Inc., 8345 Lenexa Drive, Suite 300, Lenexa, KS 66214, Phone: 913-742-5000
**CMaR** Mortenson Construction Co., Inc., 33 South 6th Street, Minneapolis, MN 55402, Phone: 319-286-5000


RDG PLANNING • DESIGN

**THIS IS IOWA BALLPARK, INC.**
**CITY OF DYERSVILLE**
28995 LANSING RD
DYERSVILLE, IA 52040

KEY PLAN

| BPI1 | BID PACKAGE 01 | 2023-09-27 |
|---|---|---|
| ISSUANCE | | DATE |

PROJECT NO: **R3005.252.04**



**EROSION CONTROL NOTES**

C02.01

SHEET SIZE: 30" X 42"
PDF's PRINTED: 9/27/2023 4:35:19 PM

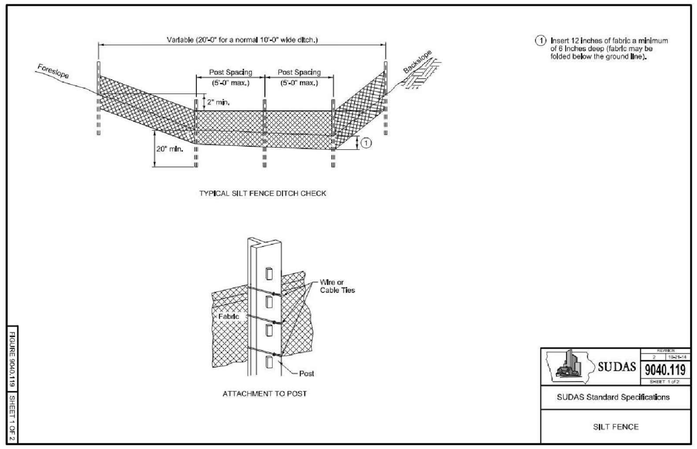


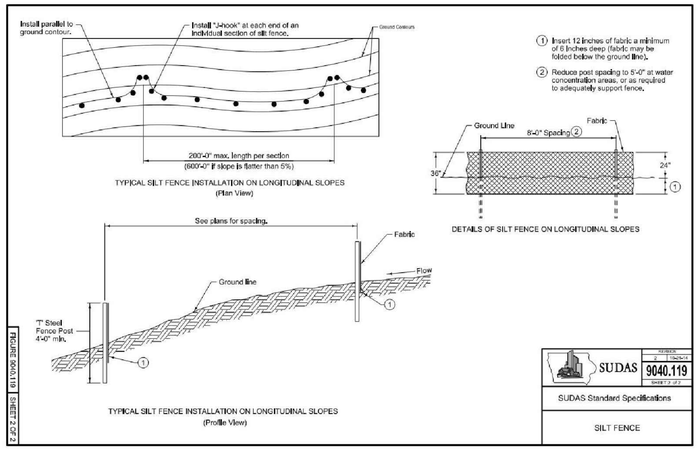


1 C2.02 SILT FENCE
SUDAS 9040.119 NOT TO SCALE

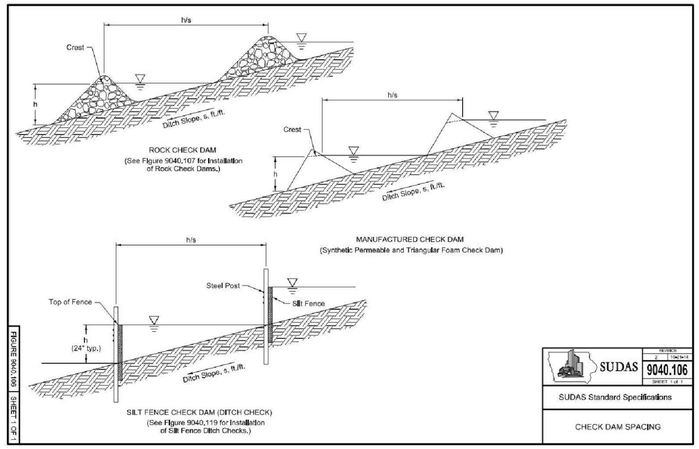


2 C2.02 CHECK DAM SPACING
SUDAS 9040.106 NOT TO SCALE

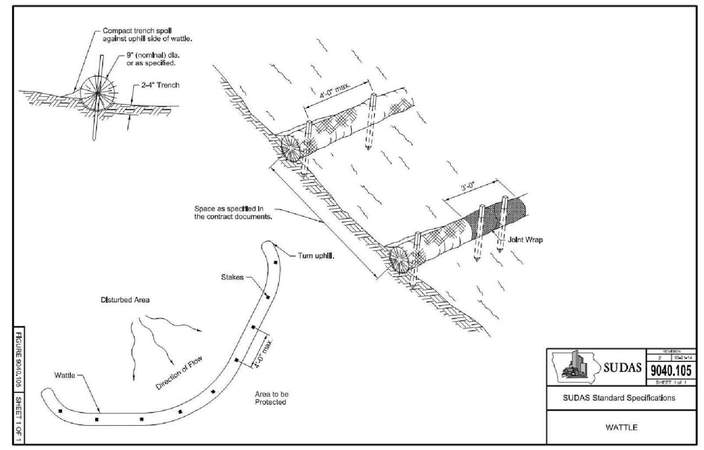


3 C2.02 WATTLE
SUDAS 9040.105 NOT TO SCALE

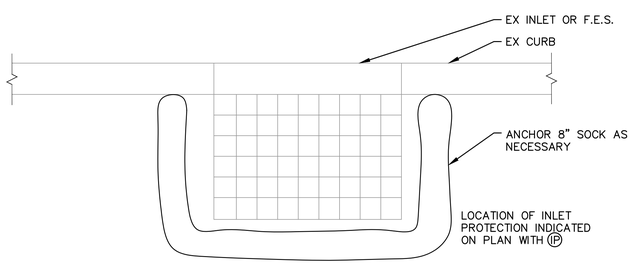


4 C02.02 TEMPORARY INLET PROTECTION
NOT TO SCALE

NOTES:
1. WASHOUT FACILITY SHALL NOT BE LOCATED WITHIN 50 FEET OF STORM DRAINS, OPEN DITCHES OR WATERBODIES.
2. WASHOUT FACILITIES MUST BE CLEANED OR NEW FACILITIES CONSTRUCTED ONCE THE FACILITY IS 75% FULL. HARDENED CONCRETE SHALL BE REMOVED AND DISPOSED OF. IF THE FACILITY IS TO BE REUSED, LINE THE STRUCTURE WITH NEW 10 MIL POLYETHYLENE SHEETING FREE OF HOLES OR TEARS.
3. A SIGN SHALL BE POSTED ADJACENT TO THE FACILITY TO INFORM CONCRETE EQUIPMENT OPERATORS OF THE FACILITY OR THE JOB SITE SUPERINTENDENT SHALL ENSURE THAT CONCRETE EQUIPMENT OPERATORS USE THE WASHOUT FACILITY.
4. IF NECESSARY, A CRUSHED STONE PATH SHALL BE CONSTRUCTED TO PROVIDE EASE OF ACCESS FOR EQUIPMENT.
5. WHEN THE FACILITY IS NO LONGER REQUIRED, THE HARDENED CONCRETE SHALL BE REMOVED AND DISPOSED OF, THE MATERIALS USED TO CONSTRUCT THE FACILITY SHALL BE REMOVED, AND THE HOLE BACKFILLED AND THE SURROUNDING AREA REPAIRED.

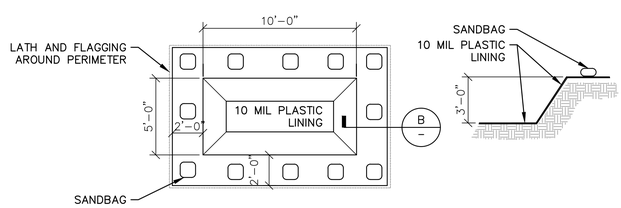


5 C03.01 CONCRETE WASHOUT
NOT TO SCALE

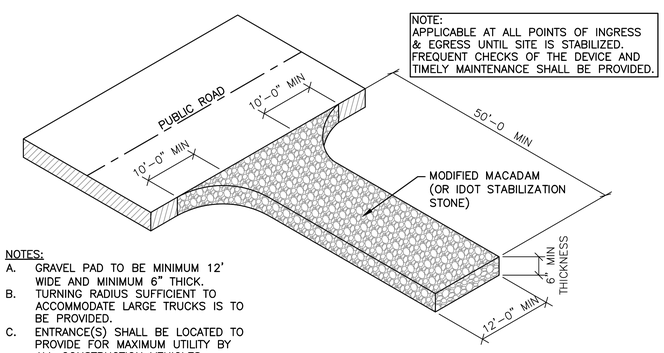


NOTES:
A. GRAVEL PAD TO BE MINIMUM 12' WIDE AND MINIMUM 6" THICK.
B. TURNING RADIUS SUFFICIENT TO ACCOMMODATE LARGE TRUCKS IS TO BE PROVIDED.
C. ENTRANCE(S) SHALL BE LOCATED TO PROVIDE FOR MAXIMUM UTILITY BY ALL CONSTRUCTION VEHICLES.
D. MUST BE MAINTAINED IN A CONDITION WHICH WILL PREVENT TRACKING OR DIRECT FLOW OF MUD ONTO STREETS. PERIODIC TOP DRESSING WITH STONE IS REQUIRED.
E. ANY TRACKED MATERIAL ON THE PUBLIC ROAD MUST BE CLEANED UP DAILY.

6 C03.01 TEMPORARY CONSTRUCTION ENTRANCE
NOT TO SCALE

SHEET SIZE: 30" X 42"
PDF's PRINTED: 6/27/2023 4:35:41 PM

BID PACKAGE 01

RDG PLANNING • DESIGN

NOT FOR CONSTRUCTION

FIELD OF DREAMS MOVIE SITE PROFESSIONAL BALLPARK


ARCHITECT
RDG Planning & Design
301 Grand Avenue
Des Moines, Iowa 50309
Phone: 515-288-3141

LANDSCAPE ARCH
RDG Planning & Design
301 Grand Avenue
Des Moines, Iowa 50309
Phone: 515-288-3141

CIVIL
Cryer Design Co.
137 Main Street, Ste. 100
Dyersville, Iowa 52040
Phone: 563-556-2484

IRRIGATION
RSI Design Group
167 South Lexington Street
Dyersville, Iowa 52040
Phone: 608-981-1889

STRUCTURAL
Weber & Moore and Assoc. Inc.
201 East Kennedy Boulevard, Suite 700
Lake Mary, FL 32746
Phone: 813-221-2424

FP/PMET
Henderson Engineers, Inc.
8345 Lenexa Drive, Suite 300
Lenexa, KS 66214
Phone: 913-742-5000

LIGHTING
RDG Planning & Design
301 Grand Avenue
Des Moines, Iowa 50309
Phone: 515-288-3141

AV / BROADCAST
Henderson Engineers, Inc.
8345 Lenexa Drive, Suite 300
Lenexa, KS 66214
Phone: 913-742-5000

FOOD & BEVERAGE
Rapids Foodservice
6201 South Gateway Drive
Cedar Rapids, IA 52404
Phone: 319-447-3515

ACOUSTICAL
Henderson Engineers, Inc.
8345 Lenexa Drive, Suite 300
Lenexa, KS 66214
Phone: 913-742-5000

CMaR
Miron Construction Co., Inc.
3355 French Court SW
Cedar Rapids, IA 52404
Phone: 319-286-5000


THIS IS IOWA BALLPARK, INC.
CITY OF DYERSVILLE
28995 LANSING RD
DYERSVILLE, IA 52040

KEY PLAN

| ISSUANCE | | DATE |
|---|---|---|
| BP01 | BID PACKAGE 01 | 2023-06-27 |

PROJECT NO: R3005.252.04



EROSION CONTROL DETAILS

C02.02

NOTE:
1. ALL SEED SHALL BE CEREAL RYE SEED MIX. TEMP SEEDED AREAS SHALL BE STRAW MULCHED.
2. RECP SHALL NOT BE USED IN AREAS THAT WILL BE PLANTED IN CORN.
3. LAYOUT SHOWN FOR REFERENCE ONLY. MASS GRADING AND STORM SEWER ARE COVERED BY THIS PLAN. PLANS FOR SITE DEVELOPMENT INCLUDING BUT NOT LIMITED TO BUILDING SIZE & LOCATIONS, PAVING, UTILITIES, FENCE AND PARKING LOT LAYOUT WILL BE SUBMITTED SEPARATELY. THESE ITEMS ARE SUBJECT TO CHANGE.

LEGEND

- TEMPORARY INTERMEDIATE TOPSOIL STOCKPILE (DURING MASS GRADING OPERATION)
- TEMPORARY TOPSOIL STOCKPILE (END OF MASS GRADING OPERATION)
- WASTE AREA
- TOPSOIL RE-SPREAD DURING MASS GRADING

*ALL DISTURBED AREA SHALL BE TEMPORARILY SEEDED WITH CEREAL RYE DURING CONSTRUCTION. UPON CONCLUSION OF GRADING IN FALL OF 2023 SEED WITH ALFALFA AND NATURAL AREA SEEDING AS DETAILED IN THE LANDSCAPING PLAN. SEE LANDSCAPE PLANS AND SPECIFICATIONS FOR MORE INFORMATION REGADING FINAL CONDITIONS

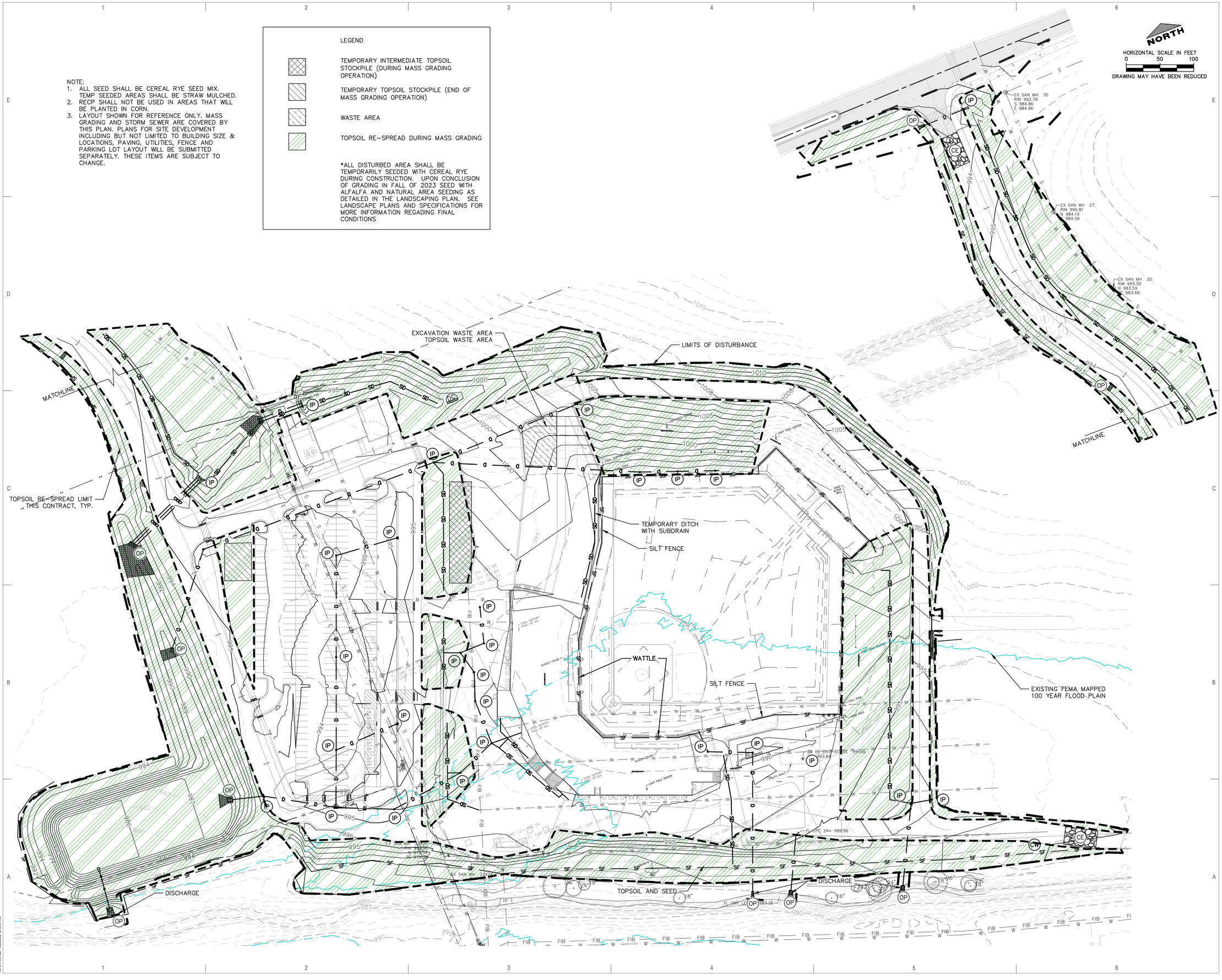


SHEET SIZE: 30" X 42"
PDF's PRINTED: 9/28/2023 12:48:37 AM

NOT FOR CONSTRUCTION

BID PACKAGE 01

RDG PLANNING • DESIGN


ARCHITECT
RDG Planning & Design
301 Grand Avenue
Des Moines, Iowa 50309
Phone: 515-288-3141

LANDSCAPE ARCH
RDG Planning & Design
301 Grand Avenue
Des Moines, Iowa 50309
Phone: 515-288-3141

CIVIL
Cryer Design Co.
137 Main Street, Ste. 100
Dyersville, Iowa 52040
Phone: 563-506-2464

IRRIGATION
FEG Design Group
167 South Lexington Street
Harrisonville, Missouri 64701
Phone: 608-989-1889

STRUCTURAL
Weber & Moore and Assoc. Inc.
201 East Kennedy Boulevard, Suite 700
Lake Mary, FL 32746
Phone: 813-221-2424

FPP/HET
Henderson Engineers, Inc.
8345 Lenexa Drive, Suite 300
Lenexa, Kansas 66214
Phone: 913-742-0000

LIGHTING
RDG Planning & Design
301 Grand Avenue
Des Moines, Iowa 50309
Phone: 515-288-3141

AV / BROADCAST
Henderson Engineers, Inc.
8345 Lenexa Drive, Suite 300
Lenexa, Kansas 66214
Phone: 913-742-0000

FOOD & BEVERAGE
Plante Kodiaktec
6201 South Gateway Drive
Cedar Rapids, IA 52404
Phone: 319-447-3515

ACOUSTICAL
Henderson Engineers, Inc.
8345 Lenexa Drive, Suite 300
Lenexa, Kansas 66214
Phone: 913-742-0000

CM&R
Mortenson Construction Co., Inc.
3535 French Court SW
Cedar Rapids, Iowa 52404
Phone: 319-298-5000


# FIELD OF DREAMS MOVIE SITE PROFESSIONAL BALLPARK

**THIS IS IOWA BALLPARK, INC.**
**CITY OF DYERSVILLE**

28995 LANSING RD
DYERSVILLE, IA 52040

KEY PLAN

| ISSUANCE | | DATE |
|---|---|---|
| BP01 | BID PACKAGE 01 | 2023-09-27 |

PROJECT NO: **R3005.252.04**



## EROSION CONTROL PLAN

C02.10

## GRADING NOTES

1. IT SHALL BE THE CONTRACTOR'S RESPONSIBILITY TO REPLACE ANY PROPERTY PINS DISTURBED DURING CONSTRUCTION AT THE ENGINEER'S OR SURVEYOR'S REGULAR FEE OR RATE.
2. EXISTING UNDERGROUND UTILITIES AND IMPROVEMENTS ARE SHOWN IN THEIR APPROXIMATE LOCATION FROM RECORD INFORMATION OBTAINED FROM SOURCES OF VARYING RELIABILITY AVAILABLE AT THE TIME OF PREPARATION OF THESE PLANS. EXISTENCE, LOCATION, DEPTH, SIZE OR MATERIAL MAY NOT HAVE BEEN VERIFIED IN THE FIELD AND ENGINEER DOES NOT GUARANTEE THE ACCURACY OR COMPLETENESS OF INFORMATION SHOWN. IT SHALL BE THE RESPONSIBILITY OF THE CONTRACTOR TO DETERMINE THE EXISTENCE AND LOCATION OF ALL EXISTING UTILITIES AND SHALL CONTACT ONE CALL PRIOR TO COMMENCING WORK. THE CONTRACTOR IS CAUTIONED THAT ONLY ACTUAL EXCAVATION WILL REVEAL EXISTENCE, LOCATION, DEPTH, SIZE AND MATERIAL OF UNDERGROUND UTILITIES OR OTHER FACILITIES. CONTRACTOR SHALL BE RESPONSIBLE FOR ALL COSTS INCURRED AS A RESULT OF THEIR FAILURE TO LOCATE EXISTING UTILITIES AND FACILITIES PRIOR TO COMMENCING WORK. THE ENGINEER MAKES NOT GUARANTEE, AND NO WARRANTEE IS IMPLIED, REGARDING THE ACCURACY OR COMPLETENESS OF INFORMATION SHOWN FOR EXISTING UTILITIES AND IMPROVEMENTS.
3. IT SHALL BE THE CONTRACTOR'S RESPONSIBILITY TO IMMEDIATELY NOTIFY THE DESIGN ENGINEER AND ARCHITECT UPON DISCOVERY OF ANY FIELD CONFLICTS OR CHANGES IN CONDITIONS. FAILURE TO DO SO UPON DISCOVERY WILL VOID CLAIMS FOR COMPENSATION AS EXTRA WORK FOR THAT WHICH COULD HAVE BEEN MITIGATED HAD THE ENGINEER BEEN NOTIFIED AT TIME OF DISCOVERY.
4. ANY PROPOSED REVISIONS TO THESE PLANS SHALL BE REVIEWED AND APPROVED BY THE ARCHITECT AND WHEN APPLICABLE, BY THE CITY ENGINEER, PRIOR TO CONSTRUCTION. THE CONTRACTOR SHALL BE HELD RESPONSIBLE FOR ANY FIELD CHANGES MADE WITHOUT WRITTEN AUTHORIZATION FROM THE ENGINEER, OR CITY ENGINEER, WHERE APPLICABLE. ANY DEVIATIONS OR CHANGES IN THESE PLANS WITHOUT OFFICIAL APPROVAL OF THE DESIGN ENGINEER SHALL ABSOLVE THE DESIGN ENGINEER OF ANY AND ALL RESPONSIBILITY OF SAID DEVIATION OR CHANGE.
5. SHOULD IT APPEAR THAT THE WORK TO BE DONE OR ANY MATTER RELATIVE THERETO IS NOT SUFFICIENTLY DETAILED OR EXPLAINED ON THESE PLANS, THE CONTRACTOR SHALL CONTACT THE ARCHITECT FOR SUCH FURTHER EXPLANATIONS AS MAY BE NECESSARY.
6. LEGALLY DISPOSE OF SURPLUS SOIL MATERIAL AND WASTE MATERIALS OFF OWNER'S PROPERTY OR AT DESIGNATED DISPOSITION AREA.

NORTH

HORIZONTAL SCALE IN FEET
0 60 120
DRAWING MAY HAVE BEEN REDUCED

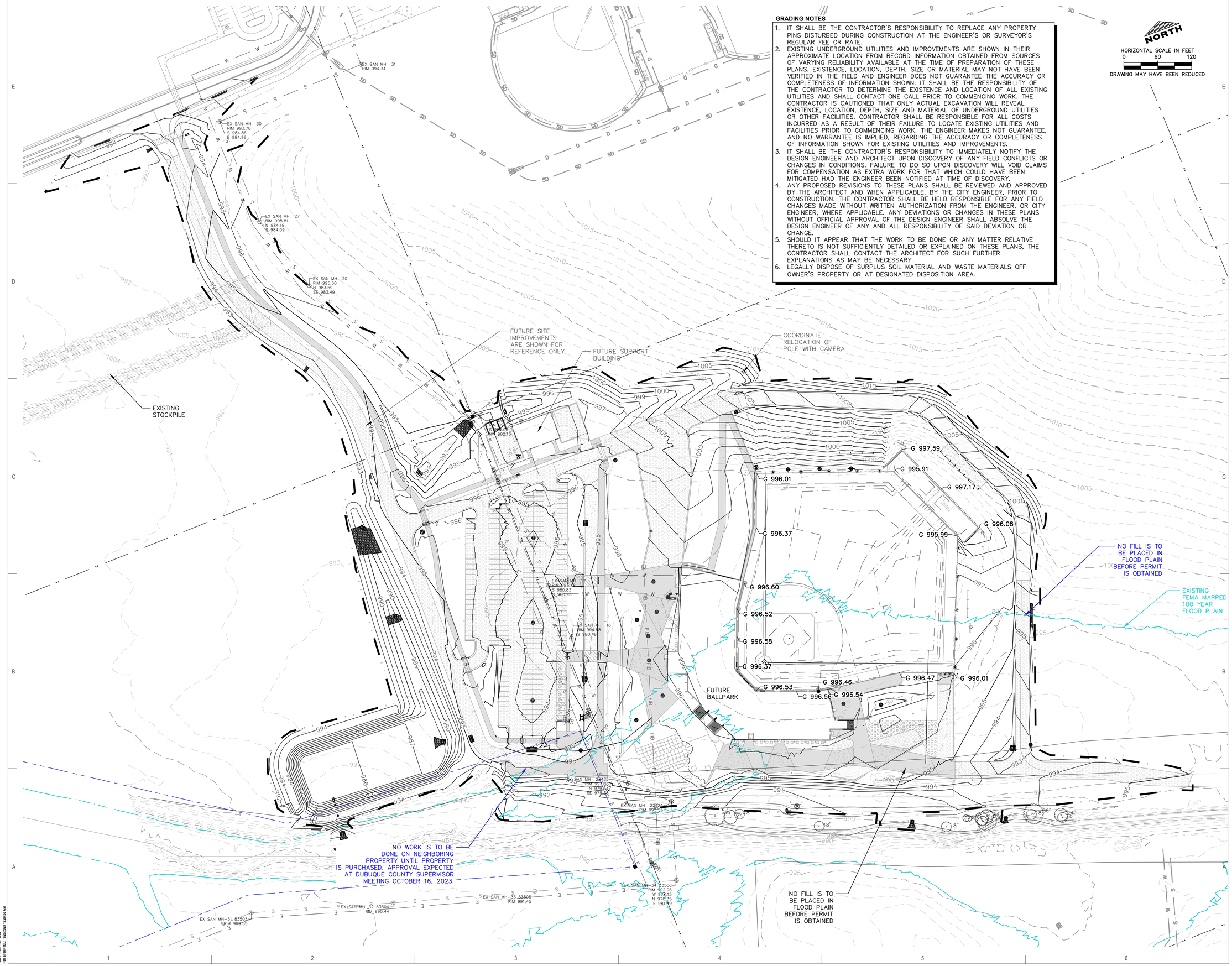


SHEET SIZE: 36" X 48"
PDF-PRINTED: 9/28/2023 12:25:59 AM

# NOT FOR CONSTRUCTION

BID PACKAGE 01

# FIELD OF DREAMS MOVIE SITE PROFESSIONAL BALLPARK

**THIS IS IOWA BALLPARK, INC.**
**CITY OF DYERSVILLE**

28995 LANSING RD
DYERSVILLE, IA 52040

KEY PLAN

| | |
|---|---|
| **ARCHITECT** | RDG Planning & Design, 301 Grand Avenue, Des Moines, IA 50309, Phone: 515-288-3141 |
| **LANDSCAPE ARCH** | RDG Planning & Design, 301 Grand Avenue, Des Moines, IA 50309, Phone: 515-288-3141 |
| **CIVIL** | Cryer Design Co., 137 Main Street, Ste. 100, Dubuque, IA 52001, Phone: 563-556-2484 |
| **IRRIGATION** | RSG Design Group, 167 South Lexington Street, Dubuque, IA 52003, Phone: 608-589-1889 |
| **STRUCTURAL** | Weber & Maurer and Assoc. Inc., 201 East Kennedy Boulevard, Suite 100, Lake Mills, IA 50450, Phone: 913-221-2424 |
| **FPP/MET** | Henderson Engineers, Inc., 8345 Lenexa Drive, Suite 300, Lenexa, KS 66214, Phone: 913-742-5000 |
| **LIGHTING** | RDG Planning & Design, 301 Grand Avenue, Des Moines, IA 50309, Phone: 515-288-3141 |
| **AV / BROADCAST** | Henderson Engineers, Inc., 8345 Lenexa Drive, Suite 300, Lenexa, KS 66214, Phone: 913-742-5000 |
| **FOOD & BEVERAGE** | Rapids Foodservice, 6201 South Gateway Drive, Cedar Rapids, IA 52404, Phone: 319-447-3515 |
| **ACOUSTICAL** | Henderson Engineers, Inc., 8345 Lenexa Drive, Suite 300, Lenexa, KS 66214, Phone: 913-742-5000 |
| **CMaR** | Mortenson Construction Co., Inc., 3335 French Court SW, Cedar Rapids, IA 52404, Phone: 319-286-5000 |

| ISSUE | ISSUANCE | DATE |
|---|---|---|
| BP01 | BID PACKAGE 01 | 2023-09-27 |

PROJECT NO: **R3005.252.04**



**GRADING PLAN OVERALL**

C02.20

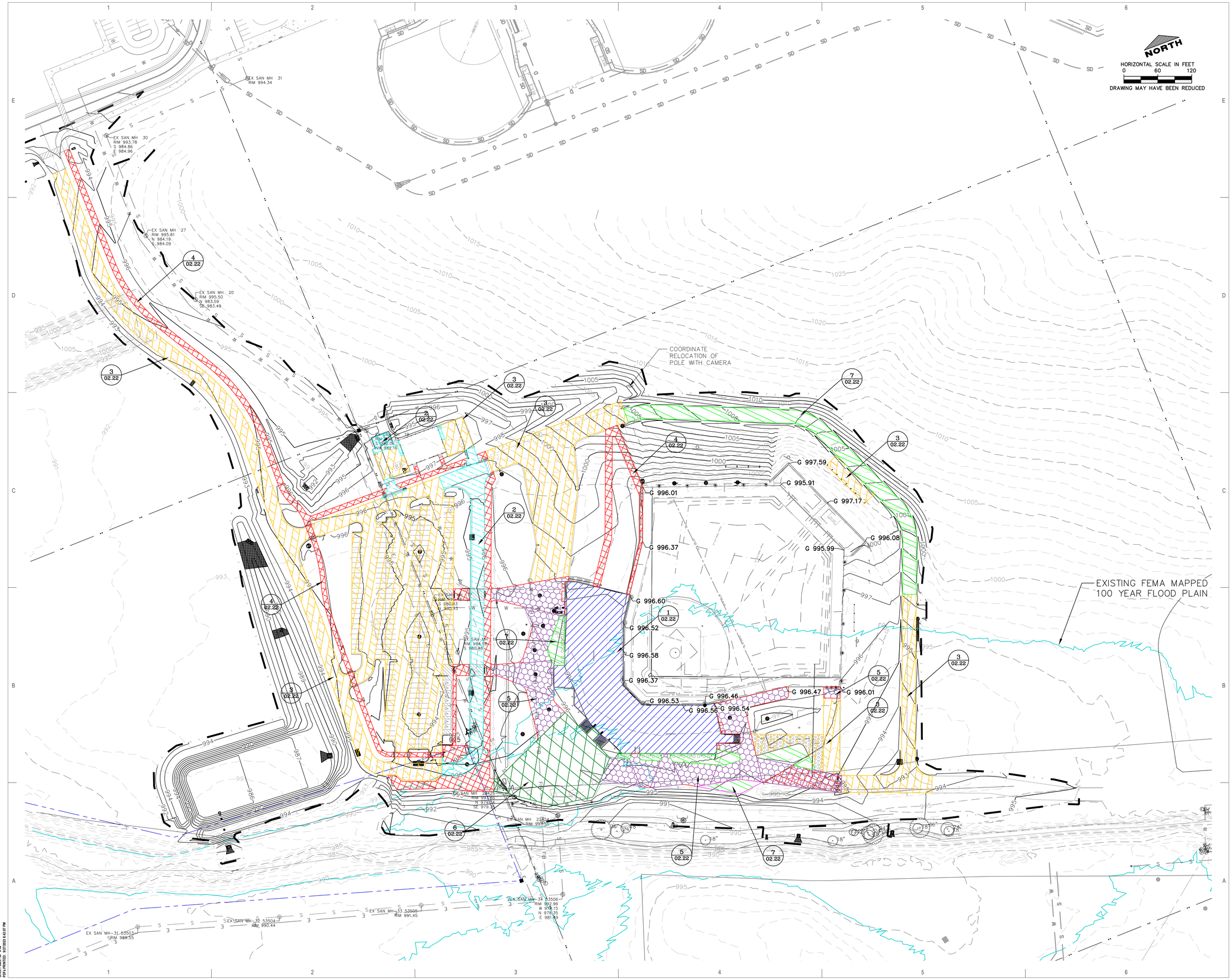


SHEET SIZE: 30" X 42"
PDF's PRINTED: 9/27/2023 6:45:07 PM

# NOT FOR CONSTRUCTION

**ARCHITECT**
RDG Planning & Design
301 Grand Avenue
Des Moines, Iowa 50309
Phone: 515-288-3141

**LANDSCAPE ARCH**
RDG Planning & Design
301 Grand Avenue
Des Moines, Iowa 50309
Phone: 515-288-3141

**CIVIL**
Cryer Design Co.
137 Main Street, Ste. 100
Dyersville, Iowa 52040
Phone: 563-506-2464

**IRRIGATION**
FEG Design Group
167 South Lexington Street
Harrisonville, Missouri 64701
Phone: 816-980-1888

**STRUCTURAL**
Weber & Associates Assoc. Inc.
201 East Kennedy Boulevard, Suite 700
Lincoln, Nebraska 68508
Phone: 913-221-2424

**FPP/MET**
Henderson Engineers, Inc.
8345 Lenexa Drive, Suite 300
Lenexa, Kansas 66214
Phone: 913-742-0000

**LIGHTING**
RDG Planning & Design
301 Grand Avenue
Des Moines, Iowa 50309
Phone: 515-288-3141

**AV / BROADCAST**
Henderson Engineers, Inc.
8345 Lenexa Drive, Suite 300
Lenexa, Kansas 66214
Phone: 913-742-0000

**FOOD & BEVERAGE**
Rapids Foodservice
6201 South Gateway Drive
Cedar Rapids, Iowa
Phone: 319-447-3515

**ACOUSTICAL**
Henderson Engineers, Inc.
8345 Lenexa Drive, Suite 300
Lenexa, Kansas 66214
Phone: 913-742-0000

**CMaR**
Martin Construction Co., Inc.
335 French Court SW
Cedar Rapids, Iowa 52404
Phone: 319-298-5000

# BID PACKAGE 01

RDG PLANNING • DESIGN

# FIELD OF DREAMS MOVIE SITE PROFESSIONAL BALLPARK

**THIS IS IOWA BALLPARK, INC.**
**CITY OF DYERSVILLE**

28995 LANSING RD
DYERSVILLE, IA 52040

KEY PLAN

| ISSUANCE | | DATE |
|---|---|---|
| BP01 | BID PACKAGE 01 | 2023-09-27 |

PROJECT NO: **R3005.252.04**



## GRADING TYPICAL SECTIONS

C02.21

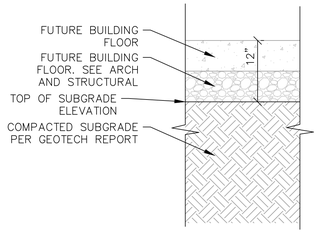


1 C02.22 BUILDING FLOOR TYPICAL SECTION NOT TO SCALE

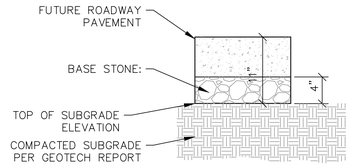


2 C02.22 CONCRETE PAVEMENT TYPICAL SECTION NOT TO SCALE

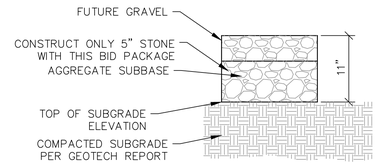


3 C02.22 GRAVEL SURFACE TYPICAL SECTION NOT TO SCALE

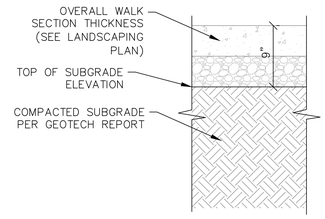


4 C02.22 CONCRETE SIDEWALK TYPICAL SECTION NOT TO SCALE

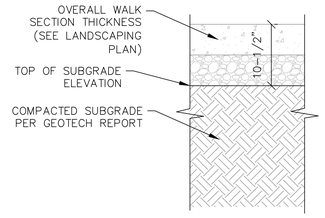


5 C02.22 CONCRETE PAVEMENT AT CONCOURSE TYPICAL SECTION NOT TO SCALE

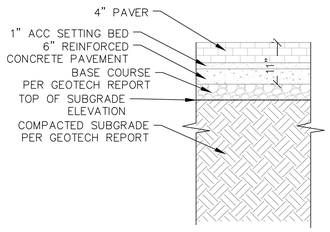


6 C02.22 UNIT PAVERS TYPICAL SECTION NOT TO SCALE

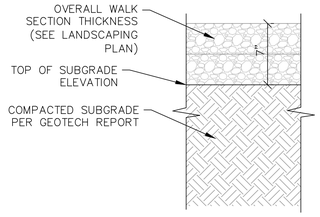


7 C02.22 AGGREGATE SURFACE TYPICAL SECTION NOT TO SCALE

NOTE:
BASE STONE: IOWA DOT SPECIFICATION: 4121 GRADATION 12A, 4132 GRADATION 30, IOWA DOT SPECIFICATION 4133, OR IOWA DOT 4123.

SUBBASE STONE: MODIFIED MACADAM IOWA DOT SECTION 4122.02 MACADAM STONE BASE MATERIAL, GRADATION 13 WITH CHOKE STONE MATERIAL RETAINED ON A ¾" SIEVE INCLUDED WITH NO MORE THAN 10% PASSING A #200 SIEVE.

SHEET SIZE: 30" X 42"
PDF: PRINTED: 9/27/2023 4:55:43 PM

BID PACKAGE 01

NOT FOR CONSTRUCTION

FIELD OF DREAMS MOVIE SITE PROFESSIONAL BALLPARK


**ARCHITECT**
RDG Planning & Design
301 Grand Avenue
Des Moines, Iowa 50309
Phone: 515-288-3141

**LANDSCAPE ARCH**
RDG Planning & Design
301 Grand Avenue
Des Moines, Iowa 50309
Phone: 515-288-3141

**CIVIL**
Cryer Design Co.
137 Main Street, Ste. 100
Dubuque, Iowa 52001
Phone: 563-556-2484

**IRRIGATION**
RDG Design Group
167 South Lexington Street
Harrisburg, Pennsylvania 17108
Phone: 608-981-1889

**STRUCTURAL**
Weber & Moore and Assoc. Inc.
201 East Kennedy Boulevard, Suite 100
Tampa, FL 33602
Phone: 813-221-2424

**FP/PMET**
Henderson Engineers, Inc.
8345 Lenexa Drive, Suite 300
Lenexa, KS 66214
Phone: 913-742-5000

**LIGHTING**
RDG Planning & Design
301 Grand Avenue
Des Moines, Iowa 50309
Phone: 515-288-3141

**AV / BROADCAST**
Henderson Engineers, Inc.
8345 Lenexa Drive, Suite 300
Lenexa, KS 66214
Phone: 913-742-5000

**FOOD & BEVERAGE**
Rapids Foodservice
6201 South Gateway Drive
Marion, IA 52302
Phone: 319-447-3515

**ACOUSTICAL**
Henderson Engineers, Inc.
8345 Lenexa Drive, Suite 300
Lenexa, KS 66214
Phone: 913-742-5000

**C/M&R**
Mortenson Construction Co., Inc.
3335 French Court SW
Cedar Rapids, Iowa 52404
Phone: 319-286-5000


RDG PLANNING • DESIGN

**THIS IS IOWA BALLPARK, INC.**
**CITY OF DYERSVILLE**

28995 LANSING RD
DYERSVILLE, IA 52040

KEY PLAN

| ISSUANCE | | DATE |
|---|---|---|
| BP01 | BID PACKAGE 01 | 2023-09-27 |

PROJECT NO: **R3005.252.04**



**GRADING TYPICAL SECTIONS**

C02.22

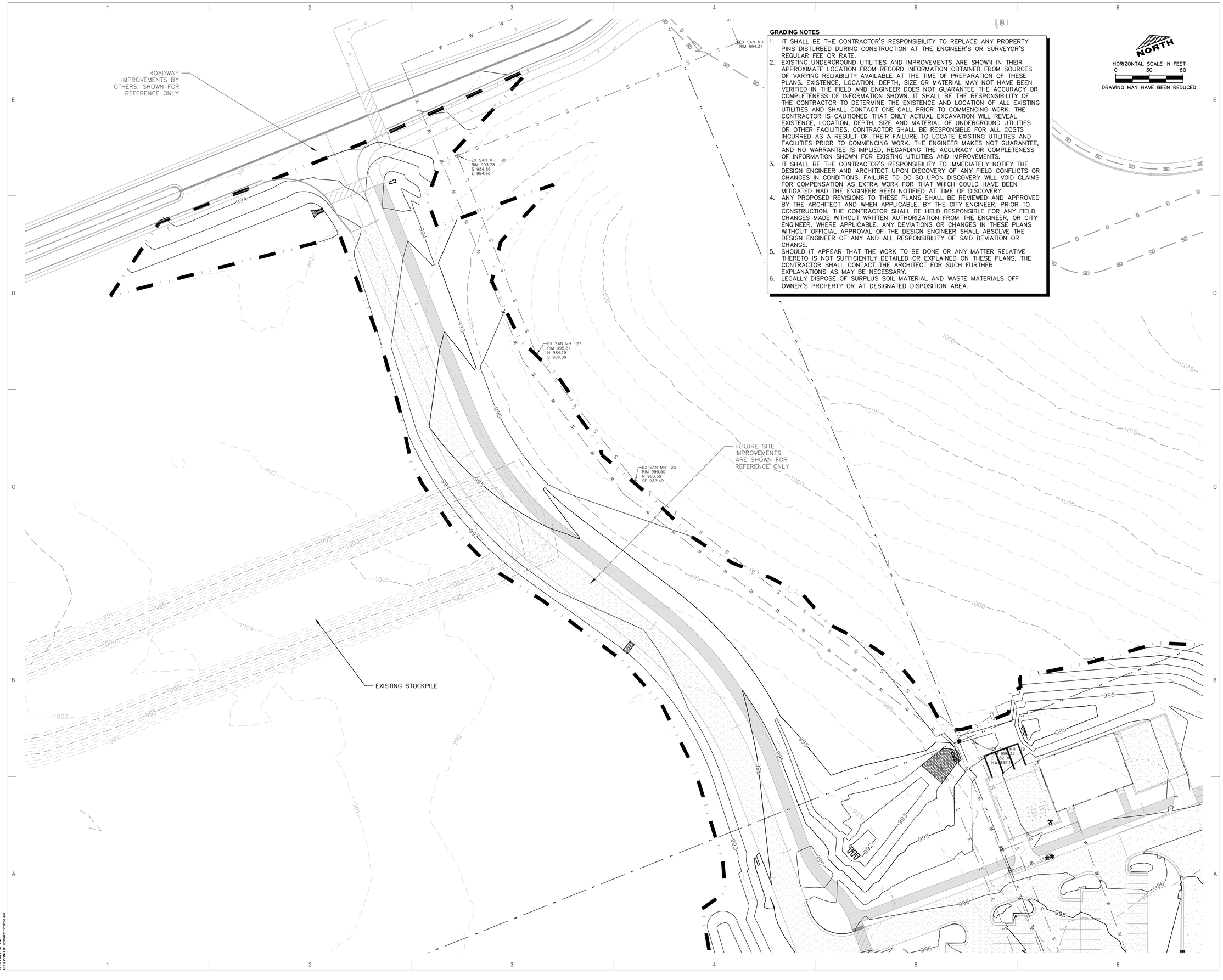


**GRADING NOTES**

1. IT SHALL BE THE CONTRACTOR'S RESPONSIBILITY TO REPLACE ANY PROPERTY PINS DISTURBED DURING CONSTRUCTION AT THE ENGINEER'S OR SURVEYOR'S REGULAR FEE OR RATE.
2. EXISTING UNDERGROUND UTILITIES AND IMPROVEMENTS ARE SHOWN IN THEIR APPROXIMATE LOCATION FROM RECORD INFORMATION OBTAINED FROM SOURCES OF VARYING RELIABILITY AVAILABLE AT THE TIME OF PREPARATION OF THESE PLANS. EXISTENCE, LOCATION, DEPTH, SIZE OR MATERIAL MAY NOT HAVE BEEN VERIFIED IN THE FIELD AND ENGINEER DOES NOT GUARANTEE THE ACCURACY OR COMPLETENESS OF INFORMATION SHOWN. IT SHALL BE THE RESPONSIBILITY OF THE CONTRACTOR TO DETERMINE THE EXISTENCE AND LOCATION OF ALL EXISTING UTILITIES AND SHALL CONTACT ONE CALL PRIOR TO COMMENCING WORK. THE CONTRACTOR IS CAUTIONED THAT ONLY ACTUAL EXCAVATION WILL REVEAL EXISTENCE, LOCATION, DEPTH, SIZE AND MATERIAL OF UNDERGROUND UTILITIES OR OTHER FACILITIES. CONTRACTOR SHALL BE RESPONSIBLE FOR ALL COSTS INCURRED AS A RESULT OF THEIR FAILURE TO LOCATE EXISTING UTILITIES AND FACILITIES PRIOR TO COMMENCING WORK. THE ENGINEER MAKES NOT GUARANTEE, AND NO WARRANTEE IS IMPLIED, REGARDING THE ACCURACY OR COMPLETENESS OF INFORMATION SHOWN FOR EXISTING UTILITIES AND IMPROVEMENTS.
3. IT SHALL BE THE CONTRACTOR'S RESPONSIBILITY TO IMMEDIATELY NOTIFY THE DESIGN ENGINEER AND ARCHITECT UPON DISCOVERY OF ANY FIELD CONFLICTS OR CHANGES IN CONDITIONS. FAILURE TO DO SO UPON DISCOVERY WILL VOID CLAIMS FOR COMPENSATION AS EXTRA WORK FOR THAT WHICH COULD HAVE BEEN MITIGATED HAD THE ENGINEER BEEN NOTIFIED AT TIME OF DISCOVERY.
4. ANY PROPOSED REVISIONS TO THESE PLANS SHALL BE REVIEWED AND APPROVED BY THE ARCHITECT AND WHEN APPLICABLE, BY THE CITY ENGINEER, PRIOR TO CONSTRUCTION. THE CONTRACTOR SHALL BE HELD RESPONSIBLE FOR ANY FIELD CHANGES MADE WITHOUT WRITTEN AUTHORIZATION FROM THE ENGINEER, OR CITY ENGINEER, WHERE APPLICABLE. ANY DEVIATIONS OR CHANGES IN THESE PLANS WITHOUT OFFICIAL APPROVAL OF THE DESIGN ENGINEER SHALL ABSOLVE THE DESIGN ENGINEER OF ANY AND ALL RESPONSIBILITY OF SAID DEVIATION OR CHANGE.
5. SHOULD IT APPEAR THAT THE WORK TO BE DONE OR ANY MATTER RELATIVE THERETO IS NOT SUFFICIENTLY DETAILED OR EXPLAINED ON THESE PLANS, THE CONTRACTOR SHALL CONTACT THE ARCHITECT FOR SUCH FURTHER EXPLANATIONS AS MAY BE NECESSARY.
6. LEGALLY DISPOSE OF SURPLUS SOIL MATERIAL AND WASTE MATERIALS OFF OWNER'S PROPERTY OR AT DESIGNATED DISPOSITION AREA.

SHEET SIZE: 30" X 42"
PDF# PRINTED: 9/26/2023 12:26:59 AM

BID PACKAGE 01

NOT FOR CONSTRUCTION

RDG PLANNING • DESIGN

**ARCHITECT**
RDG Planning & Design
301 Grand Avenue
Des Moines, Iowa 50309
Phone: 515-288-3141

**LANDSCAPE ARCH**
RDG Planning & Design
301 Grand Avenue
Des Moines, Iowa 50309
Phone: 515-288-3141

**CIVIL**
Cryer Design Co.
137 Main Street, Ste. 100
Dyersville, Iowa 52040
Phone: 563-556-2484

**IRRIGATION**
RDG Design Group
167 South Lexington Street
Harrisonville, Missouri 64701
Phone: 606-969-1889

**STRUCTURAL**
Weber & Maurer and Assoc. Inc.
201 East Kennedy Boulevard, Suite 700
Tampa, Florida 33602
Phone: 813-221-2424

**FP/PMET**
Henderson Engineers, Inc.
8345 Lenexa Drive, Suite 300
Lenexa, Kansas 66214
Phone: 913-742-0000

**LIGHTING**
RDG Planning & Design
301 Grand Avenue
Des Moines, Iowa 50309
Phone: 515-288-3141

**AV / BROADCAST**
Henderson Engineers, Inc.
8345 Lenexa Drive, Suite 300
Lenexa, Kansas 66214
Phone: 913-742-0000

**FOOD & BEVERAGE**
Fisette Incorporated
6201 South Gateway Drive
Marion, Iowa 52302
Phone: 319-447-3515

**ACOUSTICAL**
Henderson Engineers, Inc.
8345 Lenexa Drive, Suite 300
Lenexa, Kansas 66214
Phone: 913-742-0000

**CM&R**
Mortenson Construction Co., Inc.
3335 French Court SW
Cedar Rapids, Iowa 52404
Phone: 319-286-5000

FIELD OF DREAMS MOVIE SITE PROFESSIONAL BALLPARK

**THIS IS IOWA BALLPARK, INC.**
**CITY OF DYERSVILLE**

28995 LANSING RD
DYERSVILLE, IA 52040

KEY PLAN

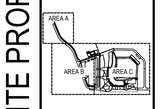


| ISSUANCE | | DATE |
|---|---|---|
| BP01 | BID PACKAGE 01 | 2023-09-27 |

PROJECT NO: **R3005.252.04**



**GRADING PLAN**

C02.23

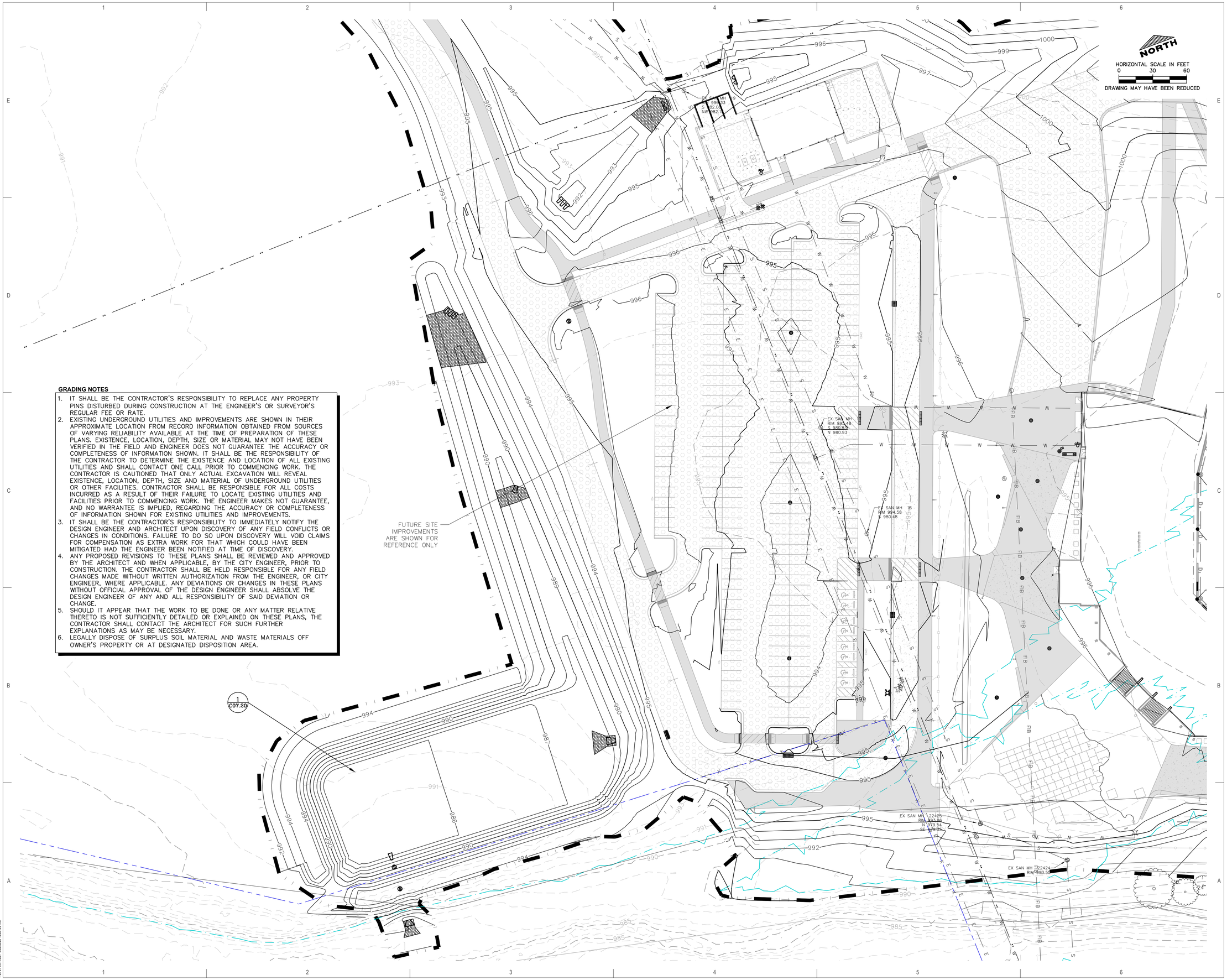


**GRADING NOTES**

1. IT SHALL BE THE CONTRACTOR'S RESPONSIBILITY TO REPLACE ANY PROPERTY PINS DISTURBED DURING CONSTRUCTION AT THE ENGINEER'S OR SURVEYOR'S REGULAR FEE OR RATE.
2. EXISTING UNDERGROUND UTILITIES AND IMPROVEMENTS ARE SHOWN IN THEIR APPROXIMATE LOCATION FROM RECORD INFORMATION OBTAINED FROM SOURCES OF VARYING RELIABILITY AVAILABLE AT THE TIME OF PREPARATION OF THESE PLANS. EXISTENCE, LOCATION, DEPTH, SIZE OR MATERIAL MAY NOT HAVE BEEN VERIFIED IN THE FIELD AND ENGINEER DOES NOT GUARANTEE THE ACCURACY OR COMPLETENESS OF INFORMATION SHOWN. IT SHALL BE THE RESPONSIBILITY OF THE CONTRACTOR TO DETERMINE THE EXISTENCE AND LOCATION OF ALL EXISTING UTILITIES AND SHALL CONTACT ONE CALL PRIOR TO COMMENCING WORK. THE CONTRACTOR IS CAUTIONED THAT ONLY ACTUAL EXCAVATION WILL REVEAL EXISTENCE, LOCATION, DEPTH, SIZE AND MATERIAL OF UNDERGROUND UTILITIES OR OTHER FACILITIES. CONTRACTOR SHALL BE RESPONSIBLE FOR ALL COSTS INCURRED AS A RESULT OF THEIR FAILURE TO LOCATE EXISTING UTILITIES AND FACILITIES PRIOR TO COMMENCING WORK. THE ENGINEER MAKES NOT GUARANTEE, AND NO WARRANTEE IS IMPLIED, REGARDING THE ACCURACY OR COMPLETENESS OF INFORMATION SHOWN FOR EXISTING UTILITIES AND IMPROVEMENTS.
3. IT SHALL BE THE CONTRACTOR'S RESPONSIBILITY TO IMMEDIATELY NOTIFY THE DESIGN ENGINEER AND ARCHITECT UPON DISCOVERY OF ANY FIELD CONFLICTS OR CHANGES IN CONDITIONS. FAILURE TO DO SO UPON DISCOVERY WILL VOID CLAIMS FOR COMPENSATION AS EXTRA WORK FOR THAT WHICH COULD HAVE BEEN MITIGATED HAD THE ENGINEER BEEN NOTIFIED AT TIME OF DISCOVERY.
4. ANY PROPOSED REVISIONS TO THESE PLANS SHALL BE REVIEWED AND APPROVED BY THE ARCHITECT AND WHEN APPLICABLE, BY THE CITY ENGINEER, PRIOR TO CONSTRUCTION. THE CONTRACTOR SHALL BE HELD RESPONSIBLE FOR ANY FIELD CHANGES MADE WITHOUT WRITTEN AUTHORIZATION FROM THE ENGINEER, OR CITY ENGINEER, WHERE APPLICABLE. ANY DEVIATIONS OR CHANGES IN THESE PLANS WITHOUT OFFICIAL APPROVAL OF THE DESIGN ENGINEER SHALL ABSOLVE THE DESIGN ENGINEER OF ANY AND ALL RESPONSIBILITY OF SAID DEVIATION OR CHANGE.
5. SHOULD IT APPEAR THAT THE WORK TO BE DONE OR ANY MATTER RELATIVE THERETO IS NOT SUFFICIENTLY DETAILED OR EXPLAINED ON THESE PLANS, THE CONTRACTOR SHALL CONTACT THE ARCHITECT FOR SUCH FURTHER EXPLANATIONS AS MAY BE NECESSARY.
6. LEGALLY DISPOSE OF SURPLUS SOIL MATERIAL AND WASTE MATERIALS OFF OWNER'S PROPERTY OR AT DESIGNATED DISPOSITION AREA.

SHEET SIZE: 30" X 42"
PDF-X PRINTED: 9/28/2023 12:29:08 AM

# FIELD OF DREAMS MOVIE SITE PROFESSIONAL BALLPARK

**NOT FOR CONSTRUCTION**

BID PACKAGE 01

**ARCHITECT**
RDG Planning & Design
301 Grand Avenue
Des Moines, Iowa 50309
Phone: 515-288-3141

**LANDSCAPE ARCH**
RDG Planning & Design
301 Grand Avenue
Des Moines, Iowa 50309
Phone: 515-288-3141

**CIVIL**
Cryer Design Co.
137 Main Street, Ste. 100
Dubuque, Iowa 52001
Phone: 563-556-2484

**IRRIGATION**
FEG Design Group
167 South Lexington Street
Harrisonville, Missouri 64701
Phone: 608-989-1889

**STRUCTURAL**
Weber & Hayes and Assoc. Inc.
301 East Kennedy Boulevard, Suite 100
Lake Mary, FL 32746
Phone: 813-221-2424

**FPP/MET**
Henderson Engineers, Inc.
8345 Lenexa Drive, Suite 300
Lenexa, Kansas 66214
Phone: 913-742-5000

**LIGHTING**
RDG Planning & Design
301 Grand Avenue
Des Moines, Iowa 50309
Phone: 515-288-3141

**AV / BROADCAST**
Henderson Engineers, Inc.
8345 Lenexa Drive, Suite 300
Lenexa, Kansas 66214
Phone: 913-742-5000

**FOOD & BEVERAGE**
Rapids Foodservice
6201 South Gateway Drive
Cedar Rapids, IA 52404
Phone: 319-447-3515

**ACOUSTICAL**
Henderson Engineers, Inc.
8345 Lenexa Drive, Suite 300
Lenexa, Kansas 66214
Phone: 913-742-5000

**CM&R**
Mortenson Construction Co., Inc.
335 French Court SW
Cedar Rapids, Iowa 52404
Phone: 319-298-5000

RDG PLANNING • DESIGN

**THIS IS IOWA BALLPARK, INC.**
**CITY OF DYERSVILLE**
28995 LANSING RD
DYERSVILLE, IA 52040

KEY PLAN


| ISSUANCE | | DATE |
|---|---|---|
| BP01 | BID PACKAGE 01 | 2023-09-27 |

PROJECT NO: **R3005.252.04**



**GRADING PLAN**

C02.24

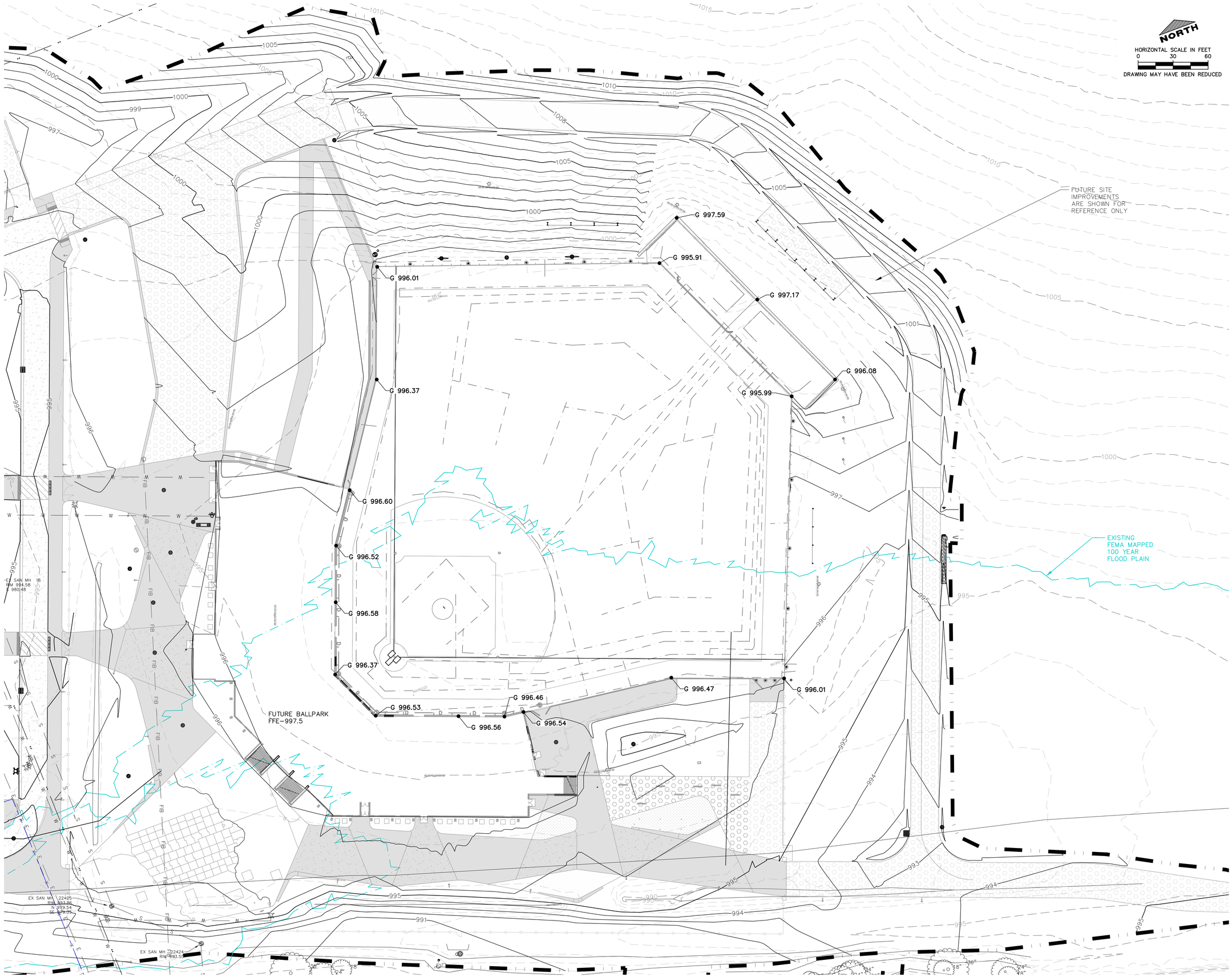


SHEET SIZE: 30" X 42"
PDF-PRINTED: 9/28/2023 12:29:16 AM

# NOT FOR CONSTRUCTION

BID PACKAGE 01

**ARCHITECT**
RDG Planning & Design
301 Grand Avenue
Des Moines, Iowa 50309
Phone: 515-288-3141

**LANDSCAPE ARCH**
RDG Planning & Design
301 Grand Avenue
Des Moines, Iowa 50309
Phone: 515-288-3141

**CIVIL**
Cryer Design Co.
137 Main Street, Ste. 100
Dubuque, Iowa 52001
Phone: 563-556-2484

**IRRIGATION**
FEG Design Group
167 South Lexington Street
Harrisburg, Pennsylvania 17108
Phone: 608-989-1889

**STRUCTURAL**
Weber & Maurer and Assoc. Inc.
301 East Kenwood Boulevard, Suite 100
Lansing, Michigan 48906
Phone: 913-221-2424

**FP/PMET**
Henderson Engineers, Inc.
8345 Lenexa Drive, Suite 300
Lenexa, Kansas 66214
Phone: 913-742-5000

**LIGHTING**
RDG Planning & Design
301 Grand Avenue
Des Moines, Iowa 50309
Phone: 515-288-3141

**AV / BROADCAST**
Henderson Engineers, Inc.
8345 Lenexa Drive, Suite 300
Lenexa, Kansas 66214
Phone: 913-742-5000

**FOOD & BEVERAGE**
Rapids Foodservice
6201 South Gateway Drive
Minneapolis, MN
Phone: 319-447-3515

**ACOUSTICAL**
Henderson Engineers, Inc.
8345 Lenexa Drive, Suite 300
Lenexa, Kansas 66214
Phone: 913-742-5000

**CMaR**
Mortenson Construction Co., Inc.
3335 French Court SW
Cedar Rapids, Iowa 52404
Phone: 319-298-5000

RDG
PLANNING • DESIGN

# FIELD OF DREAMS MOVIE SITE PROFESSIONAL BALLPARK

**THIS IS IOWA BALLPARK, INC.**
**CITY OF DYERSVILLE**
28995 LANSING RD
DYERSVILLE, IA 52040

KEY PLAN

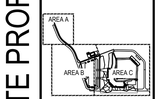


| ISSUANCE | | DATE |
|---|---|---|
| BP01 | BID PACKAGE 01 | 2023-09-27 |

PROJECT NO: **R3005.252.04**



## GRADING PLAN

C02.25

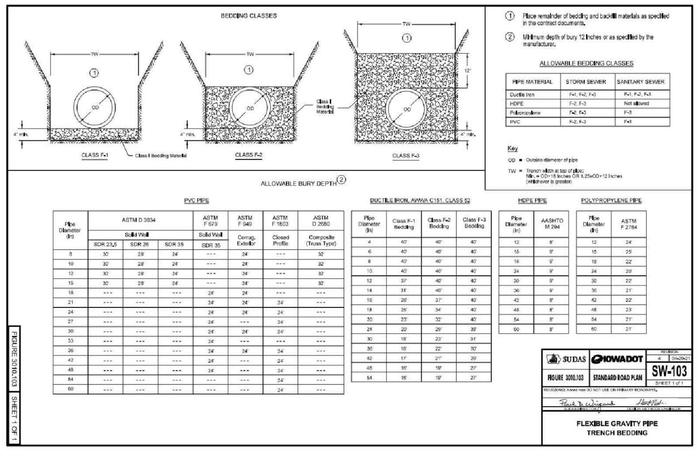


1 C07.01 TRENCH BEDDING
SUDAS 3010.103 NOT TO SCALE

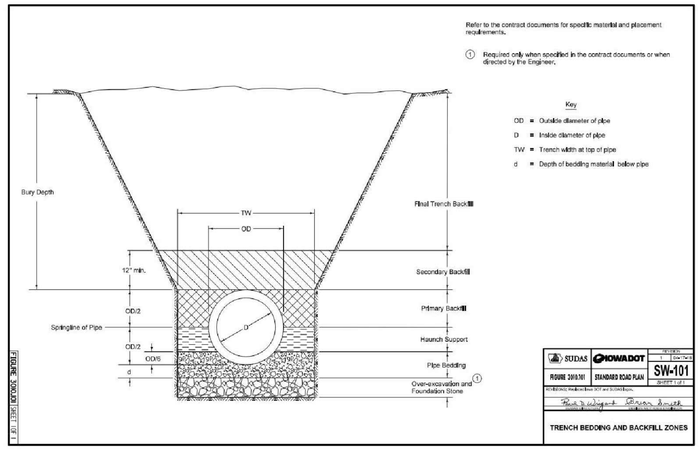


2 C07.01 TRENCH BEDDING
SUDAS 3010.101 NOT TO SCALE

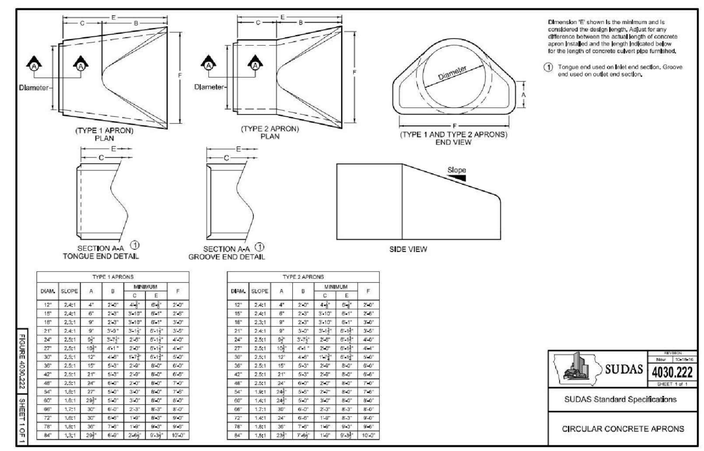


3 C07.01 CONCRETE PIPE APRON
SUDAS 4030.222 NOT TO SCALE

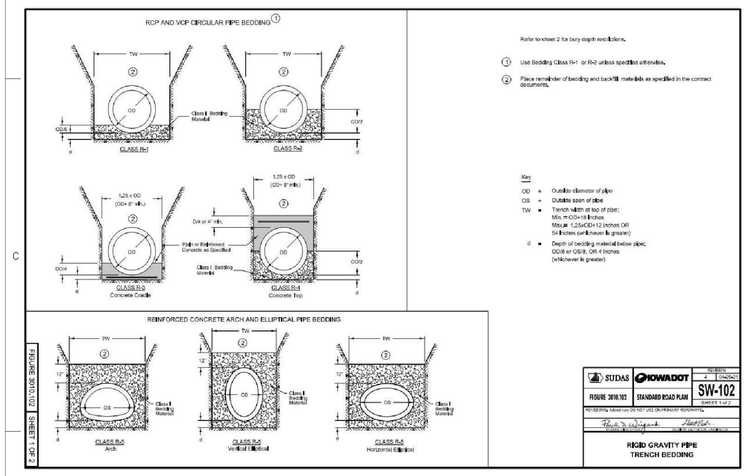


4 C07.01 TRENCH BEDDING
SUDAS 3010.102 NOT TO SCALE

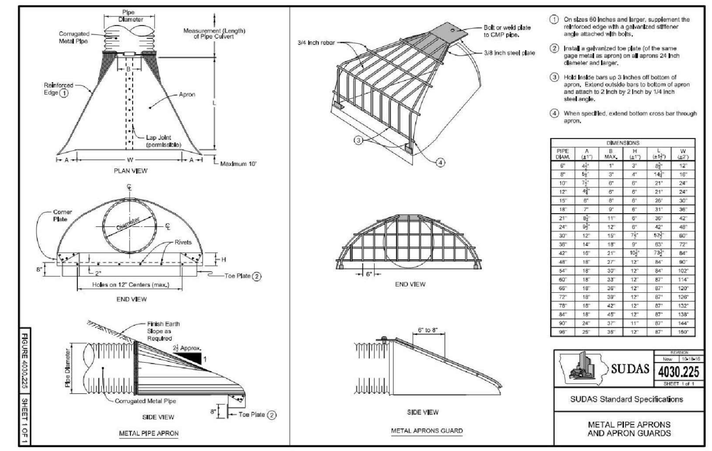


5 C07.01 METAL PIPE APRON
SUDAS 4030.225 NOT TO SCALE

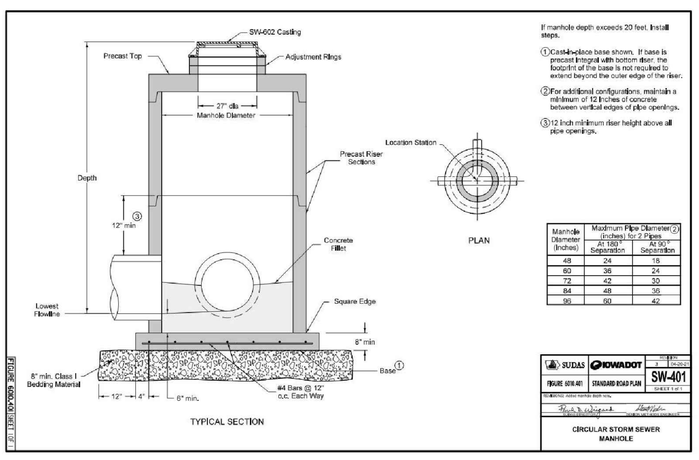


6 C07.01 STORM MANHOLE
SUDAS 6010.401 NOT TO SCALE

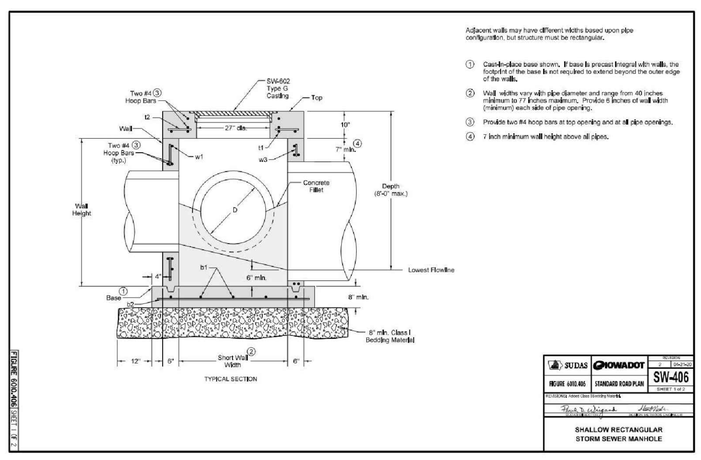


7 C07.01 SHALLOW RECTANGULAR STORM SEWER MANHOLE
SUDAS 6010.406 NOT TO SCALE

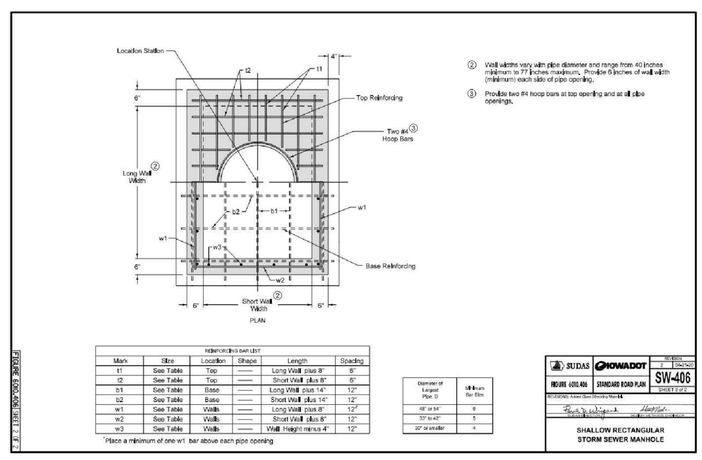


NOT FOR CONSTRUCTION

FIELD OF DREAMS MOVIE SITE PROFESSIONAL BALLPARK

BID PACKAGE 01

THIS IS IOWA BALLPARK, INC.
CITY OF DYERSVILLE
28995 LANSING RD
DYERSVILLE, IA 52040

KEY PLAN

| ISSUANCE | DATE |
|---|---|
| BP01 BID PACKAGE 01 | 2023-09-27 |

PROJECT NO: R3005.252.04



STORM DETAILS

C07.01

RDG PLANNING • DESIGN

FPP/MET
Hennessey Engineers, Inc.
Water & Wastewater Engineers
8345 Lenexa Drive, Suite 300
Overland Park, KS 66214
Phone: 913.742.6000

STRUCTURAL
RDG Design Group
201 East Kennedy Boulevard, Suite 700
Bellevue, NE 68005
Phone: 913.221.2424

CMaR
Martin Construction Co., Inc.
3355 French Court SW
Cedar Rapids, IA 52404
Phone: 319-298-5000

IRRIGATION
RDG Planning & Design
167 South Lexington Street
Harrisonville, MO 64701
Phone: 816.884.3188

ACOUSTICAL
Hennessey Engineers, Inc.
8345 Lenexa Drive, Suite 300
Overland Park, KS 66214
Phone: 913.742.6000

CIVIL
Dygert Design Co.
12 Main Street, Ste. 100
Dyersville, IA 52040
Phone: 563-556-2464

FOOD & BEVERAGE
Rapids Foodservice
6201 South Gateway Drive
Cedar Rapids, IA 52404
Phone: 319-447-3515

LANDSCAPE ARCH
RDG Planning & Design
301 Grand Avenue
Des Moines, IA 50309
Phone: 515-288-3141

AV / BROADCAST
Hennessey Engineers, Inc.
8345 Lenexa Drive, Suite 300
Overland Park, KS 66214
Phone: 913.742.6000

ARCHITECT
RDG Planning & Design
301 Grand Avenue
Des Moines, IA 50309
Phone: 515-288-3141

LIGHTING
RDG Planning & Design
301 Grand Avenue
Des Moines, IA 50309
Phone: 515-288-3141

SHEET SIZE: 30" X 42"
PDF-PRINTED: 9/27/2023 5:03:54 PM

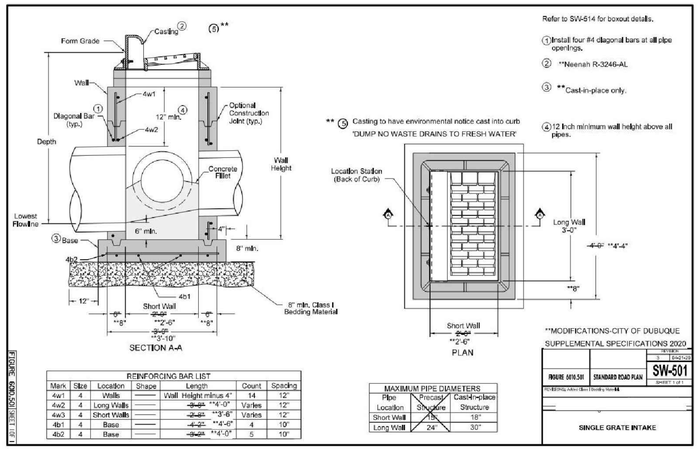


REINFORCING BAR LIST

| Mark | Size | Location | Shape | Length | | Count | Spacing |
|---|---|---|---|---|---|---|---|
| | | | | Wall | Height minus 4" | | |
| 4w1 | 4 | Walls | | | | 14 | 12" |
| 4w2 | 4 | Long Walls | | | *4'-0" | Varies | 12" |
| 4w3 | 4 | Short Walls | | | *3'-8" | Varies | 12" |
| 4b1 | 4 | Base | | | *4'-8" | 4 | 10" |
| 4b2 | 4 | Base | | | *4'-0" | 5 | 10" |

MAXIMUM PIPE DIAMETERS

| Pipe Location | Precast Structure | Cast-in-place Structure |
|---|---|---|
| Short Wall | 18" | 18" |
| Long Wall | 24" | 30" |

1 C07.02 SINGLE GRATE INTAKE SW-501
CITY OF DUBUQUE MODIFIED NOT TO SCALE

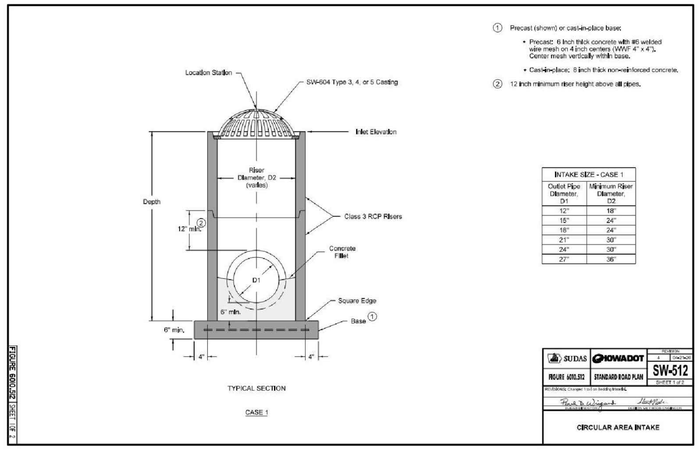


INTAKE SIZE - CASE 1

| Outlet Pipe Diameter, D1 | Minimum Riser Diameter, D2 |
|---|---|
| 12" | 18" |
| 15" | 24" |
| 18" | 24" |
| 21" | 30" |
| 24" | 30" |
| 27" | 36" |

2 C07.02 CIRCULAR AREA INTAKE
SUDAS 6010.512 NOT TO SCALE

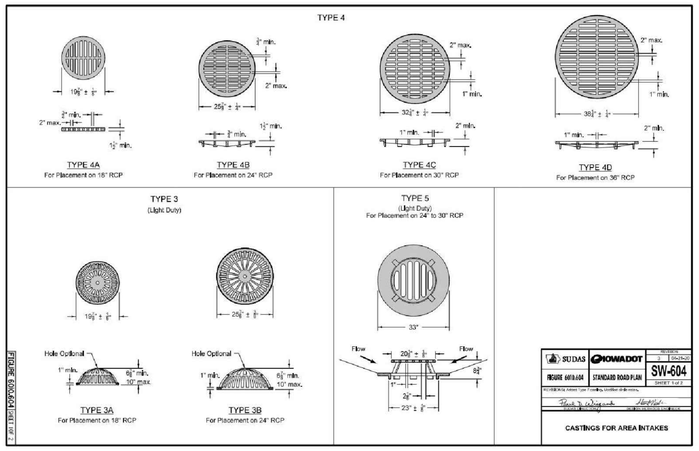


3 C07.02 CASTINGS FOR AREA INTAKES
SUDAS 6010.604 NOT TO SCALE

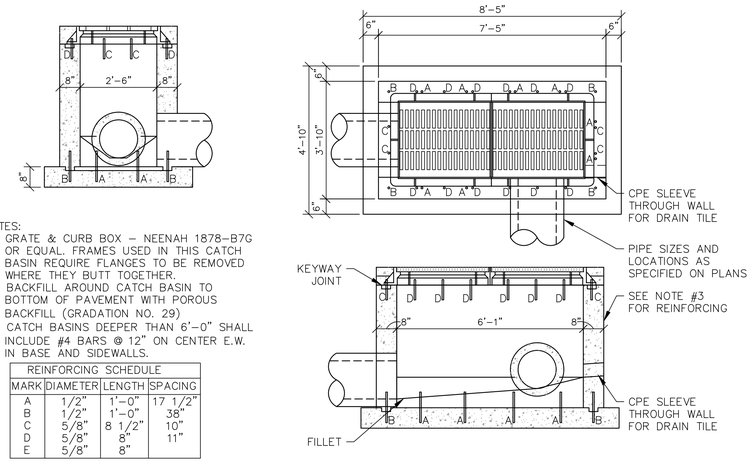


NOTES:
1. GRATE & CURB BOX – NEENAH 1878–B7G OR EQUAL. FRAMES USED IN THIS CATCH BASIN REQUIRE FLANGES TO BE REMOVED WHERE THEY BUTT TOGETHER.
2. BACKFILL AROUND CATCH BASIN TO BOTTOM OF PAVEMENT WITH POROUS BACKFILL (GRADATION NO. 29)
3. CATCH BASINS DEEPER THAN 6'–0" SHALL INCLUDE #4 BARS @ 12" ON CENTER E.W. IN BASE AND SIDEWALLS.

REINFORCING SCHEDULE

| MARK | DIAMETER | LENGTH | SPACING |
|---|---|---|---|
| A | 1/2" | 1'–0" | 17 1/2" |
| B | 1/2" | 1'–0" | 38" |
| C | 5/8" | 8 1/2" | 10" |
| D | 5/8" | 8" | 11" |
| E | 5/8" | 8" | |

4 C07.02 STORM INTAKE 104–B
NOT TO SCALE

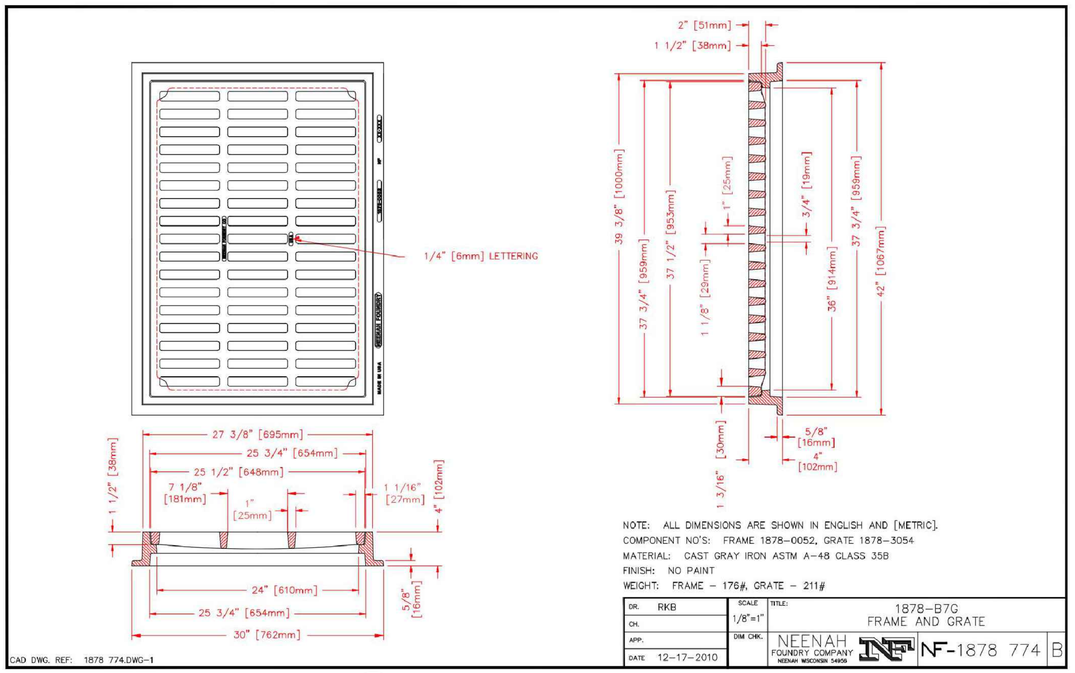


NOTE: ALL DIMENSIONS ARE SHOWN IN ENGLISH AND [METRIC].
COMPONENT NO'S: FRAME 1878–0052, GRATE 1878–3054
MATERIAL: CAST GRAY IRON ASTM A–48 CLASS 35B
FINISH: NO PAINT
WEIGHT: FRAME – 176#, GRATE – 211#

| | | | |
|---|---|---|---|
| DR. RKB | SCALE 1/8"=1" | TITLE: 1878–B7G FRAME AND GRATE | |
| CH. | | | |
| APP. | DIM CHK. | NEENAH FOUNDRY COMPANY NEENAH WISCONSIN 54956 | NF-1878 774 B |
| DATE 12-17-2010 | | | |

5 C07.02 1878–B7G FRAME AND GRATE
NEENAH FOUNDRY COMPANY NOT TO SCALE

NOTES:
1. PIPE CONNECTORS ARE REQUIRED ON LAST THREE JOINTS.
2. PIPE CONNECTORS TO BE LOCATED AND SIZED PER MANUFACTURER'S RECOMMENDATIONS.
3. EROSION STONE (RIP–RAP) GRADATION: CLASS E REVETMENT, IOWA D.O.T. SECTION 4130.04 EROSION STONE OR BUTTRESS STONE: IOWA D.O.T. SECTION 4130.05
4. RIP RAP MINIMUM DEPTH 18"
5. FILTER STONE: SECTION 4109, IOWA D.O.T. GRADATIONS 3, 4, OR 5. FILTER STONE EQUALS 1/3 QUANTITY OF RIP–RAP STONE. ENGINEERING FABRIC MAY BE USED IN PLACE OF FILTER STONE. (PER IOWA D.O.T. – SECTION 4196.01–C)
6. FILTER STONE MIN. DEPTH 6"
7. SEE PLANS FOR OUTLET PROTECTION DIMENSIONS.

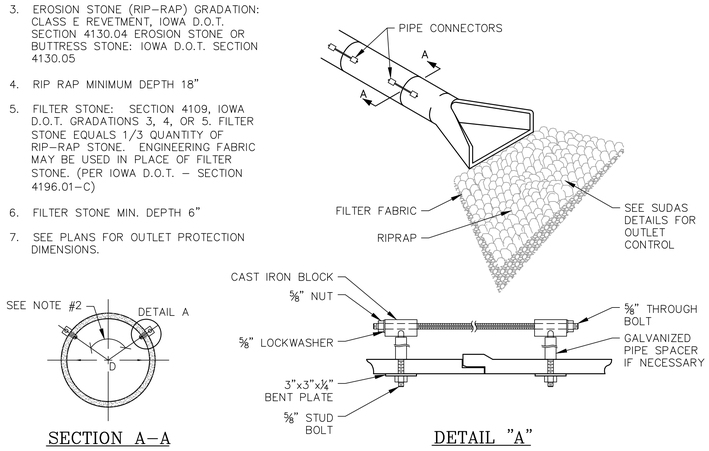


6 C07.02 PIPE APRONS PIPE CONNECTORS
NOT TO SCALE

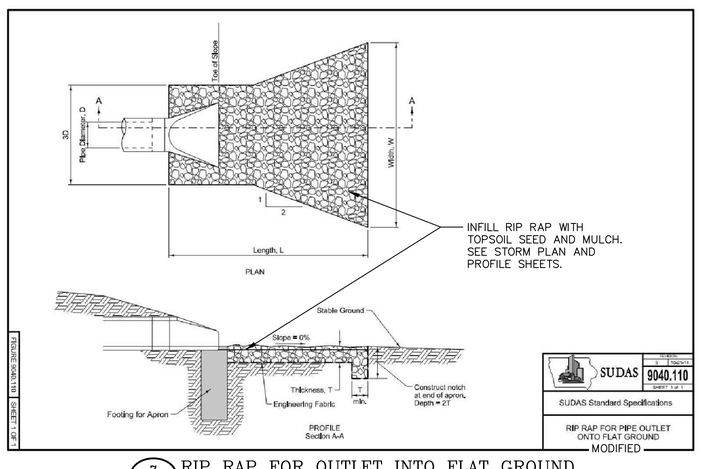


7 C07.02 RIP RAP FOR OUTLET INTO FLAT GROUND
SUDAS 9040.110 NOT TO SCALE

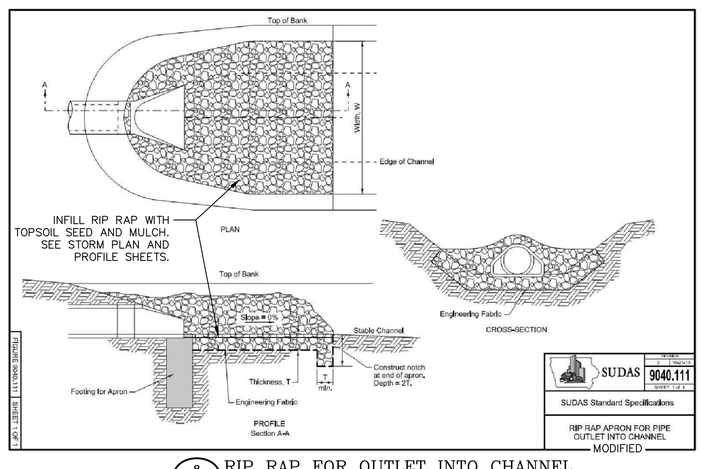


8 C07.02 RIP RAP FOR OUTLET INTO CHANNEL
SUDAS 9040.111 NOT TO SCALE

BID PACKAGE 01

NOT FOR CONSTRUCTION

FIELD OF DREAMS MOVIE SITE PROFESSIONAL BALLPARK


RDG PLANNING • DESIGN

ARCHITECT: RDG Planning & Design, 301 Grand Avenue, Des Moines, IA 50309, Phone: 515-288-3141
LANDSCAPE ARCH: RDG Planning & Design, 301 Grand Avenue, Des Moines, IA 50309, Phone: 515-288-3141
CIVIL: Cryer Design Co., 137 Main Street, Ste. 100, Dubuque, IA 52001, Phone: 563-582-2464
IRRIGATION: RSG Design Group, 167 South Lexington Street, Dubuque, IA 52003, Phone: 608-988-1888
STRUCTURAL: Weber & Weber and Assoc. Inc., 201 East Kennedy Boulevard, Suite 100, Dubuque, IA 52001, Phone: 563-221-2424
FP/PMET: Henderson Engineers, Inc., 8345 Lenexa Drive, Suite 300, Lenexa, KS 66214, Phone: 913-742-5000
LIGHTING: RDG Planning & Design, 301 Grand Avenue, Des Moines, IA 50309, Phone: 515-288-3141
AV / BROADCAST: Henderson Engineers, Inc., 8345 Lenexa Drive, Suite 300, Lenexa, KS 66214, Phone: 913-742-5000
FOOD & BEVERAGE: Rapids Foodservice, 6201 South Gateway Drive, Cedar Rapids, IA 52404, Phone: 319-447-3515
ACOUSTICAL: Henderson Engineers, Inc., 8345 Lenexa Drive, Suite 300, Lenexa, KS 66214, Phone: 913-742-5000
CMaR: Mortenson Construction Co., Inc., 3335 French Court SW, Cedar Rapids, IA 52404, Phone: 319-286-5000


THIS IS IOWA BALLPARK, INC.
CITY OF DYERSVILLE
28995 LANSING RD
DYERSVILLE, IA 52040

KEY PLAN

| ISSUANCE | DATE |
|---|---|
| BP01 BID PACKAGE 01 | 2023-09-27 |

PROJECT NO: R3005.252.04



STORM DETAILS

C07.02

SHEET SIZE: 30" X 42"
PDF PRINTED: 9/27/2023 5:04:59 PM

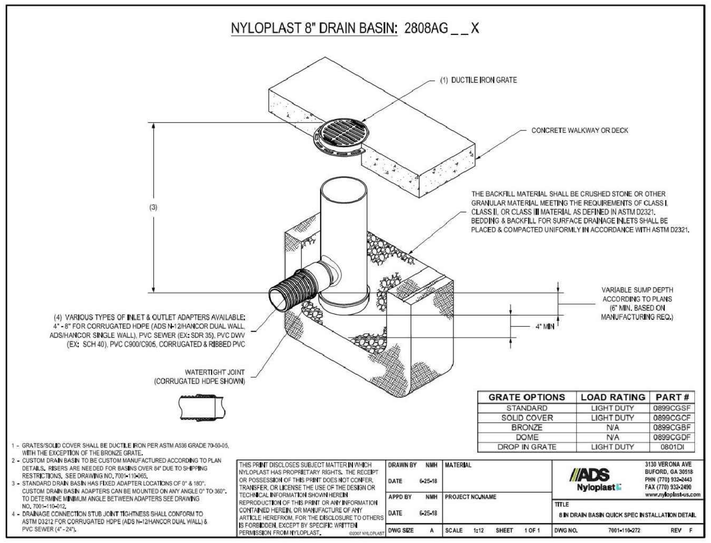


1 C07.03 8" NYLOPLAST DRAIN BASIN

NOT TO SCALE

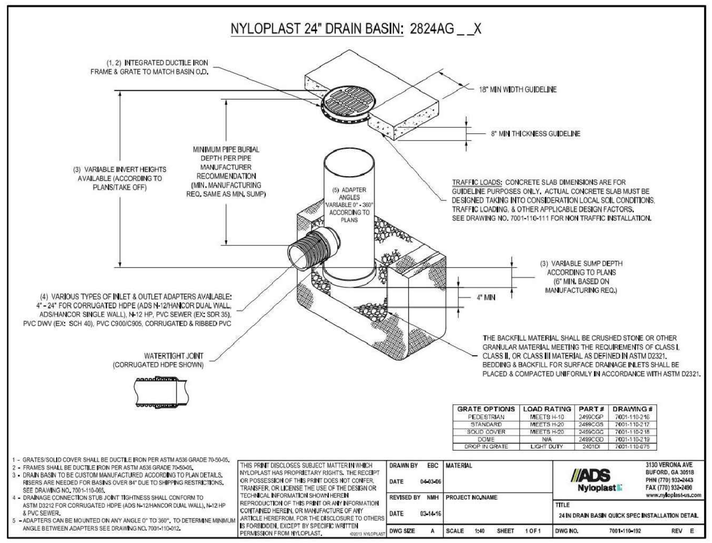


2 C07.03 24" NYLOPLAST DRAIN BASIN

NOT TO SCALE

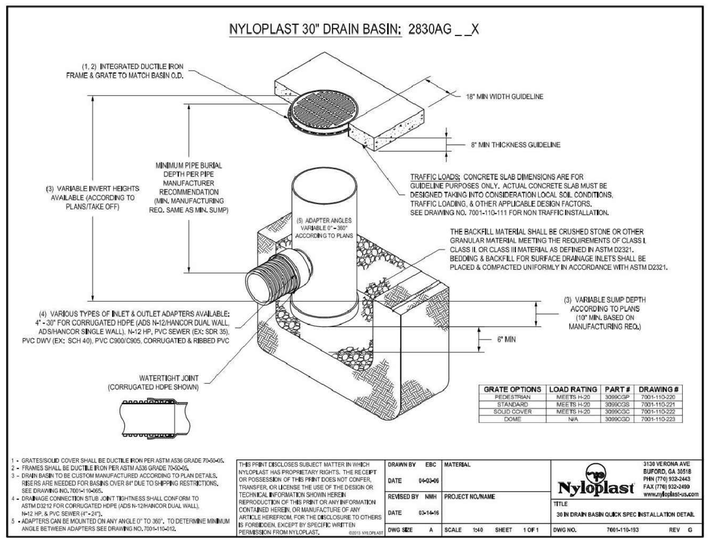


3 C07.03 30" NYLOPLAST DRAIN BASIN

NOT TO SCALE

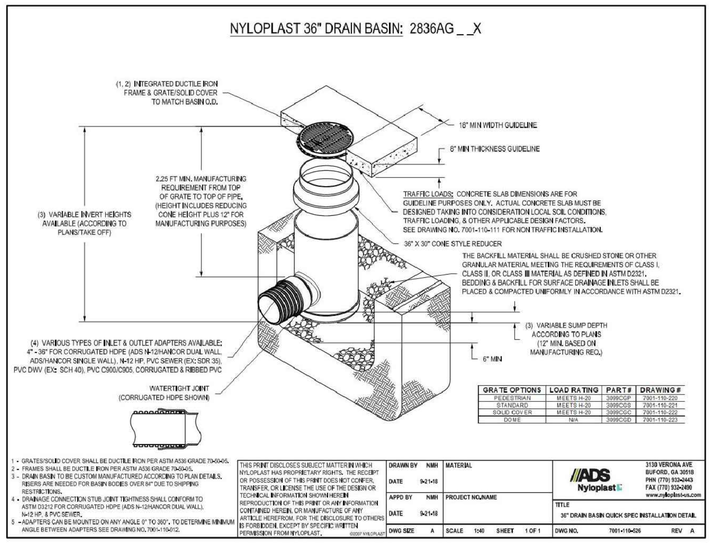


4 C07.03 36" NYLOPLAST DRAIN BASIN

NOT TO SCALE

NOTES:

1. BACKFILL AROUND CATCH BASIN TO BOTTOM OF PAVEMENT WITH POROUS BACKFILL (GRADATION NO. 29)

2. CONSTRUCTION OF INTAKES SHALL INCLUDE THE COST OF FURNISHING AND PLACING THE CPE SLEEVE THROUGH THE WALL OF THE INTAKE STRUCTURE, THE PERFORATED SUBDRAIN, FITTINGS AND THE COST TO CONNECT THE ROADWAY SUBDRAIN TO THE INTAKE SUBDRAIN AND ALL TOOLS AND LABOR NECESSARY TO CONSTRUCT THE SUBDRAIN AND CONNECTIONS.

3. ROADWAY SUBDRAIN SHALL CONNECT TO THE INTAKE SUBDRAIN AT THE LOCATIONS SHOWN ON THE ROADWAY STORM SEWER SHEETS.

4. ALL LOCATIONS ALONG THE INTAKE SUBDRAIN MUST DRAIN TOWARDS THE FABRICATED TEE FITTING.

5. PLACE GRATE TOWARD DIRECTION OF FLOW ACCORDING TO MANUFACTURE'S INSTRUCTION.

6. THE CAST IRON GRATE SHOWN IN THE CONTRACT DOCUMENTS SHALL BE INCLUDED IN THE COST OF THE INTAKE.

7. CAST IRON GRATE AND FRAME SHALL BE NEENAH R-3246 AL, DEETER 2064, EJIW 7510Z1, OR APPROVED EQUAL. FRAMES USED IN THIS CATCH BASIN REQUIRE FLANGES TO BE REMOVED WHERE THEY BUTT TOGETHER. FRAMES SHALL BE FASTENED TOGETHER USING STAINLESS STEEL BOLTS, 5/8"øx1 1/2" LENGTH, IN TWO LOCATIONS ALONG THE BUTTED EDGE.

8. DIMENSIONS SHOWN ARE FOR THE CONSTRUCTION OF A 6 INCH STANDARD CURB AS A PART OF THE PAVEMENT.

9. ALL BARS SHALL BE ASTM A 615, GRADE 60.

10. PRECAST CONCRETE UNITS WITH THESE DIMENSIONS MAY BE UTILIZED. PIPE CONNECTIONS TO PRECAST UNITS SHALL BE GROUTED.

11. WHEN INTAKE IS CONSTRUCTED OVER EXISTING PIPE, THE PIPE SHALL BE CUT TO PROPER LENGTH. THE COST OF CUTTING THE PIPE IS INCIDENTAL TO THE COST OF CONSTRUCTING THE INTAKE.

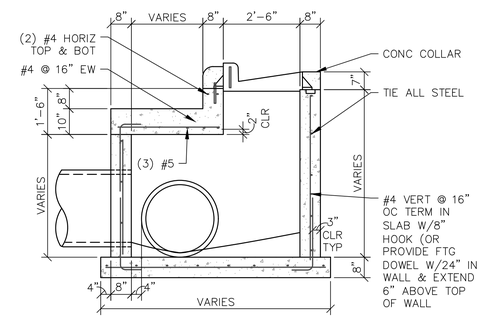


5 C07.03 STORM INTAKE 104-B SPECIAL

NOT TO SCALE

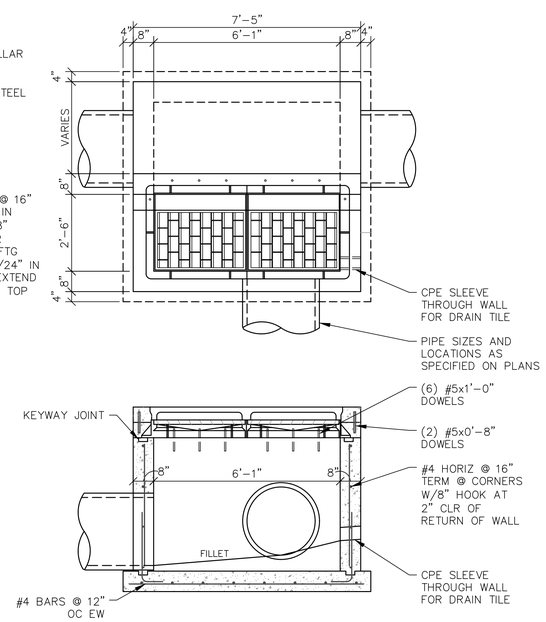


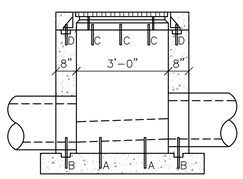


NOTES:

1. GRATE, FRAME & CURB BOX – NEENAH R-1878-A10G OR EQUAL.
2. BACKFILL AROUND CATCH BASIN TO BOTTOM OF PAVEMENT WITH POROUS BACKFILL (GRADATION NO. 29)
3. CATCH BASINS DEEPER THAN 6'-0" SHALL INCLUDE #4 BARS @ 12" ON CENTER E.W. IN BASE AND SIDEWALLS.

| REINFORCING SCHEDULE | | | |
|---|---|---|---|
| MARK | DIAMETER | LENGTH | SPACING |
| A | 1/2" | 1'-0" | 17 1/2" |
| B | 1/2" | 1'-0" | 44" |
| C | 5/8" | 9" | 13" |
| D | 5/8" | 9" | 13" |

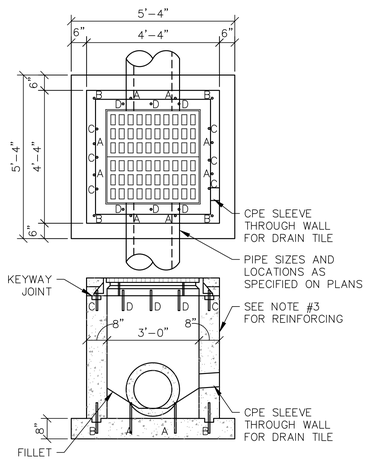


6 C07.03 STORM INTAKE 101-C

NOT TO SCALE

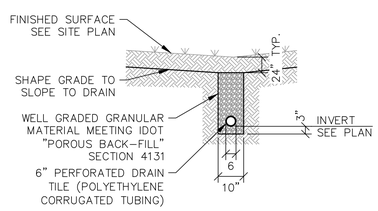


7 C07.03 SUBDRAIN

NOT TO SCALE

SHEET SIZE: 30" X 42"
PDFs PRINTED: 9/27/2023 5:28:07 PM

NOT FOR CONSTRUCTION

FIELD OF DREAMS MOVIE SITE PROFESSIONAL BALLPARK

BID PACKAGE 01

RDG PLANNING • DESIGN


ARCHITECT
RDG Planning & Design
301 Grand Avenue
Des Moines, IA 50309
Phone: 515-288-3141

CIVIL
Cryer Design Co.
12 Main Street, Ste. 100
Des Moines, IA 50309
Phone: 515-288-3141

LANDSCAPE ARCH
RDG Planning & Design
301 Grand Avenue
Des Moines, IA 50309
Phone: 515-288-3141

IRRIGATION
FEG Design Group
107 South Lexington Street
Spring Green, WI 53588
Phone: 608-588-1888

STRUCTURAL
Weber Murphy and Assoc. Inc.
201 East Kennedy Boulevard, Suite 700
Tampa, FL 33602
Phone: 813-221-2424

FPP/MET
Henderson Engineers, Inc.
8345 Lenexa Drive, Suite 300
Lenexa, KS 66214
Phone: 913-742-5000

LIGHTING
RDG Planning & Design
301 Grand Avenue
Des Moines, IA 50309
Phone: 515-288-3141

AV / BROADCAST
Henderson Engineers, Inc.
8345 Lenexa Drive, Suite 300
Lenexa, KS 66214
Phone: 913-742-5000

FOOD & BEVERAGE
Foodtrain Consultants
6201 South Gateway Drive
Garland, TX 75044
Phone: 469-441-3315

ACOUSTICAL
Henderson Engineers, Inc.
8345 Lenexa Drive, Suite 300
Lenexa, KS 66214
Phone: 913-742-5000

CIMaR
Mortenson Construction Co., Inc.
2335 Rand Court SW
Cedar Rapids, IA 52404
Phone: 319-286-5000


THIS IS IOWA BALLPARK, INC.
CITY OF DYERSVILLE

28995 LANSING RD
DYERSVILLE, IA 52040

KEY PLAN

| | | |
|---|---|---|
| BP01 | BID PACKAGE 01 | 2023-09-27 |
| ISSUANCE | | DATE |

PROJECT NO: R3005.252.04



STORM DETAILS

C07.03

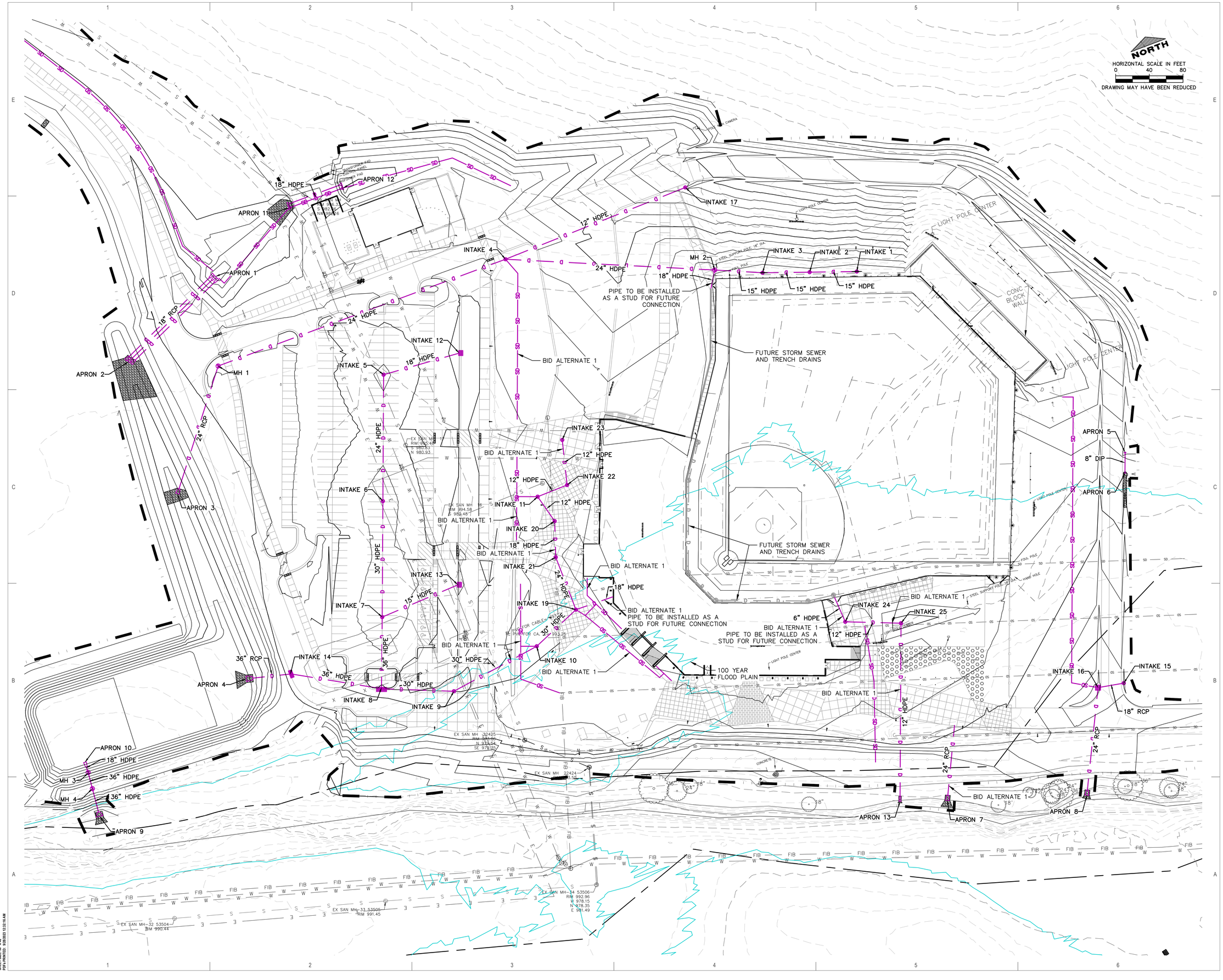


# BID PACKAGE 01

# NOT FOR CONSTRUCTION

# FIELD OF DREAMS MOVIE SITE PROFESSIONAL BALLPARK

**THIS IS IOWA BALLPARK, INC.**
**CITY OF DYERSVILLE**

28995 LANSING RD
DYERSVILLE, IA 52040

KEY PLAN

| | | |
|---|---|---|
| BP01 | BID PACKAGE 01 | 2023-09-27 |
| ISSUANCE | | DATE |

PROJECT NO: **R3005.252.04**



**STORM PLAN OVERALL**

C07.10


**ARCHITECT**
RDG Planning & Design
301 Grand Avenue
Des Moines, Iowa 50309
Phone: 515-288-3141

**LANDSCAPE ARCH**
RDG Planning & Design
301 Grand Avenue
Des Moines, Iowa 50309
Phone: 515-288-3141

**CIVIL**
Cryer Design Co.
137 Main Street, Ste. 100
Dyersville, Iowa 52040
Phone: 563-506-2464

**IRRIGATION**
FEG Design Group
167 South Lexington Street
Harrisburg, Pennsylvania 17603
Phone: 608-989-1889

**STRUCTURAL**
Weber & Weaver-Kaas, Inc.
201 East Kennedy Boulevard, Suite 700
Tampa, Florida 33602
Phone: 813-221-2424

**FP/PMET**
Henderson Engineers, Inc.
8345 Lenexa Drive, Suite 300
Lenexa, Kansas 66214
Phone: 913-742-0000

**LIGHTING**
RDG Planning & Design
301 Grand Avenue
Des Moines, Iowa 50309
Phone: 515-288-3141

**AV / BROADCAST**
Henderson Engineers, Inc.
8345 Lenexa Drive, Suite 300
Lenexa, Kansas 66214
Phone: 913-742-0000

**FOOD & BEVERAGE**
Ricardo Kostopoulos
6201 South Gateway Drive
Sioux Falls, SD 57108
Phone: 319-441-3315

**ACOUSTICAL**
Henderson Engineers, Inc.
8345 Lenexa Drive, Suite 300
Lenexa, Kansas 66214
Phone: 913-742-0000

**CMaR**
Martin Construction Co., Inc.
335 French Court SW
Cedar Rapids, Iowa 52404
Phone: 319-298-5000


SHEET SIZE: 30" X 42"
PDF6 PRINTED: 9/26/2023 12:31:16 AM

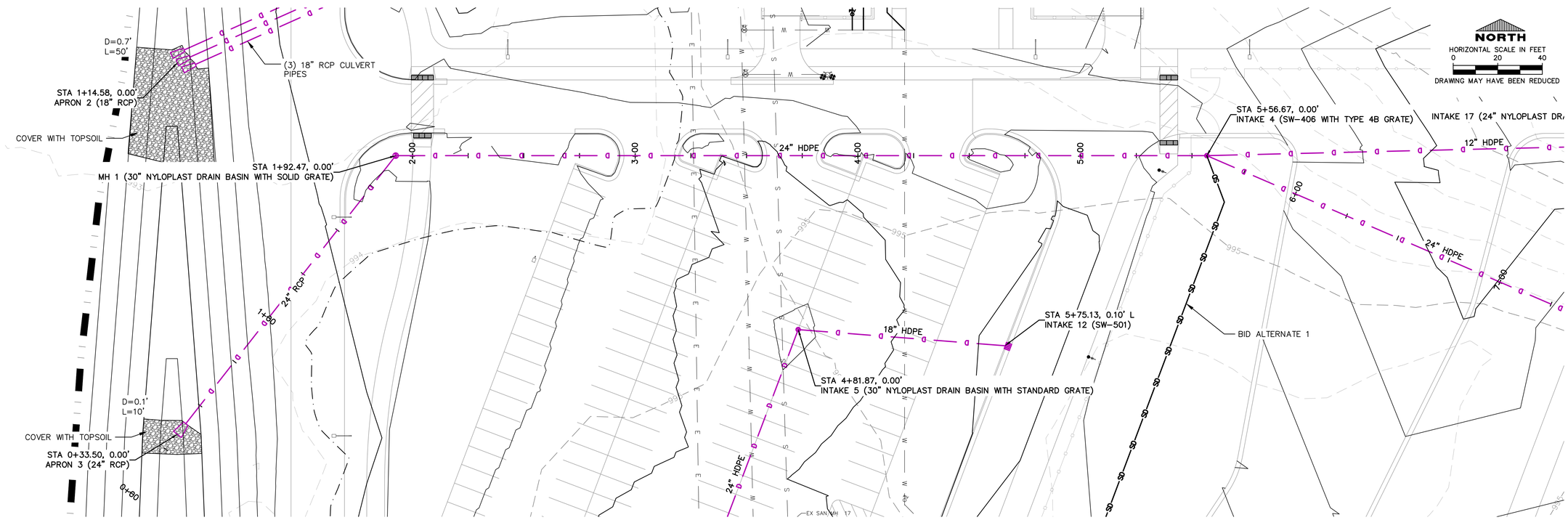


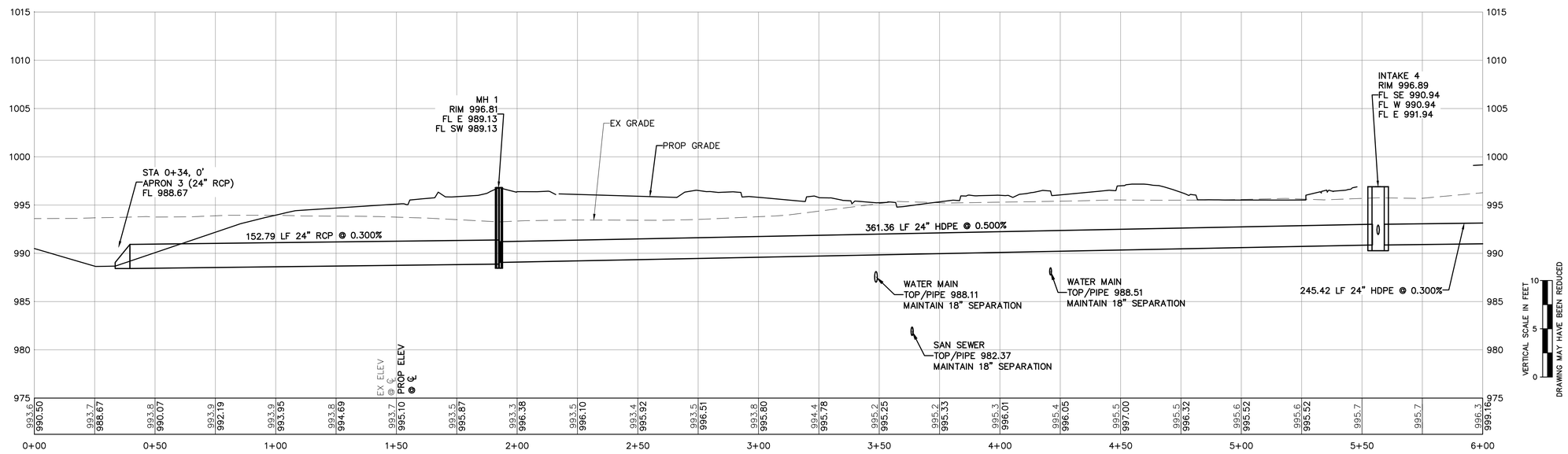


| | | | | | | | | | | | | | | | | | | | | | | | |
|---|---|---|---|---|---|---|---|---|---|---|---|---|---|---|---|---|---|---|---|---|---|---|---|
| 993.6 | 993.7 | 993.8 | 993.9 | 993.9 | 993.8 | 993.7 | 993.5 | 993.7 | 993.5 | 993.4 | 993.5 | 993.8 | 994.4 | 995.2 | 995.2 | 995.3 | 995.4 | 995.5 | 995.5 | 995.6 | 995.6 | 995.7 | 995.7 | 996.3 |
| 990.50 | 988.67 | 990.07 | 992.19 | 993.95 | 994.69 | 995.10 | 995.87 | 996.38 | 996.10 | 995.92 | 996.51 | 995.80 | 995.78 | 995.25 | 995.33 | 996.01 | 996.05 | 997.00 | 996.32 | 995.52 | 995.52 | | | 999.16 |
| 0+00 | 0+50 | 1+00 | 1+50 | 2+00 | 2+50 | 3+00 | 3+50 | 4+00 | 4+50 | 5+00 | 5+50 | 6+00 | | | | | | | | | | | | |

SHEET SIZE: 30" X 42"
PDFs PRINTED: 9/28/2023 12:28:59 AM

# FIELD OF DREAMS MOVIE SITE PROFESSIONAL BALLPARK

**NOT FOR CONSTRUCTION**

BID PACKAGE 01

RDG PLANNING • DESIGN

**ARCHITECT**
RDG Planning & Design
301 Grand Avenue
Des Moines, Iowa 50309
Phone: 515-288-3141

**LANDSCAPE ARCH**
RDG Planning & Design
301 Grand Avenue
Des Moines, Iowa 50309
Phone: 515-288-3141

**CIVIL**
Cryer Design Co.
137 Main Street, Ste. 100
Dyersville, Iowa 52040
Phone: 563-556-2484

**IRRIGATION**
FEG Design Group
167 South Lexington Street
Schaumburg, Illinois 60193
Phone: 630-980-1889

**STRUCTURAL**
Weber & Moore-Ann Assoc. Inc.
201 East Kennedy Boulevard, Suite 100
Lake Mary, Florida 32746
Phone: 813-221-2424

**FPP/MET**
Henderson Engineers, Inc.
8345 Lenexa Drive, Suite 300
Lenexa, Kansas 66214
Phone: 913-742-0000

**LIGHTING**
RDG Planning & Design
301 Grand Avenue
Des Moines, Iowa 50309
Phone: 515-288-3141

**AV / BROADCAST**
Henderson Engineers, Inc.
8345 Lenexa Drive, Suite 300
Lenexa, Kansas 66214
Phone: 913-742-0000

**FOOD & BEVERAGE**
Rapids Foodservice
6201 South Gateway Drive
Marion, Iowa 52302
Phone: 319-447-3315

**ACOUSTICAL**
Henderson Engineers, Inc.
8345 Lenexa Drive, Suite 300
Lenexa, Kansas 66214
Phone: 913-742-0000

**C/M&R**
Mortenson Construction Co., Inc.
3335 French Court SW
Cedar Rapids, Iowa 52404
Phone: 319-286-5000

**THIS IS IOWA BALLPARK, INC.**
**CITY OF DYERSVILLE**
28995 LANSING RD
DYERSVILLE, IA 52040

KEY PLAN

| ISSUANCE | | DATE |
|---|---|---|
| BP01 | BID PACKAGE 01 | 2023-09-27 |

PROJECT NO: **R3005.252.04**



**STORM PLAN & PROFILE**

C07.11

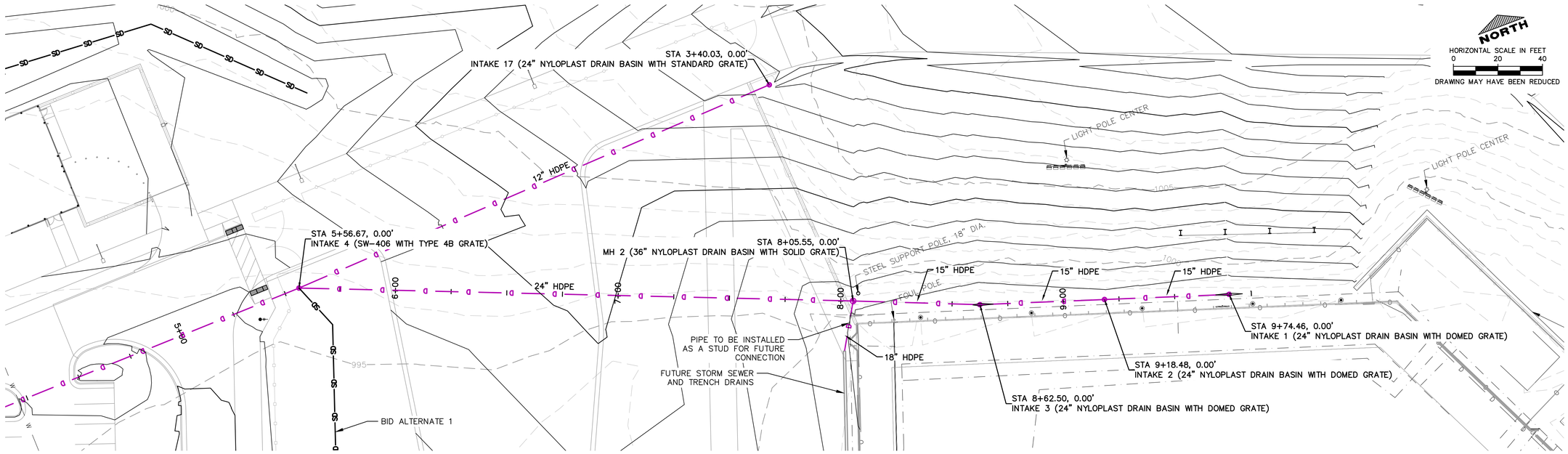


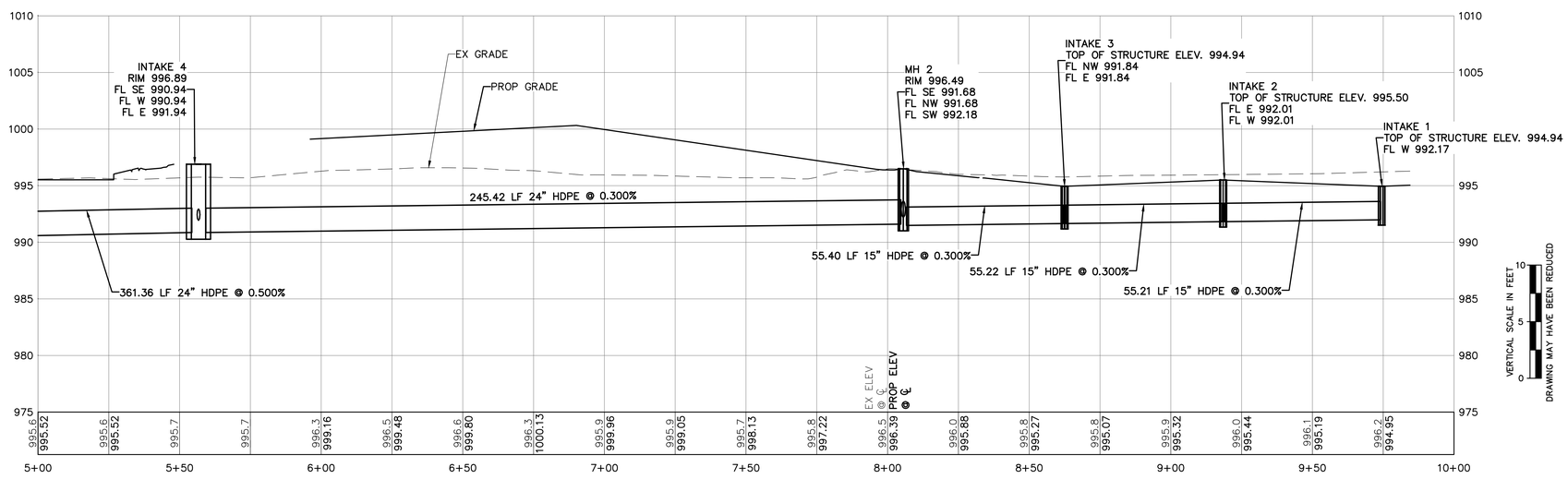


BID PACKAGE 01

**NOT FOR CONSTRUCTION**

RDG PLANNING • DESIGN

**ARCHITECT**
RDG Planning & Design
301 Grand Avenue
Des Moines, Iowa 50309
Phone: 515-288-3141

**LANDSCAPE ARCH**
RDG Planning & Design
301 Grand Avenue
Des Moines, Iowa 50309
Phone: 515-288-3141

**CIVIL**
Cryer Design Co.
137 Main Street, Ste. 100
Dyersville, Iowa 52040
Phone: 563-506-2464

**IRRIGATION**
FEG Design Group
167 South Lexington Street
Harrisonville, Missouri 64036
Phone: 636-980-1889

**STRUCTURAL**
Weber & Maurer and Assoc. Inc.
201 East Kennedy Boulevard, Suite 700
Tampa, Florida 33602
Phone: 813-221-2424

**FP/PMET**
Henderson Engineers, Inc.
8345 Lenexa Drive, Suite 300
Lenexa, Kansas 66214
Phone: 913-742-0000

**LIGHTING**
RDG Planning & Design
301 Grand Avenue
Des Moines, Iowa 50309
Phone: 515-288-3141

**AV / BROADCAST**
Henderson Engineers, Inc.
8345 Lenexa Drive, Suite 300
Lenexa, Kansas 66214
Phone: 913-742-0000

**FOOD & BEVERAGE**
Rapids Foodservice
6201 South Gateway Drive
Cedar Rapids, Iowa 52404
Phone: 319-447-3515

**ACOUSTICAL**
Henderson Engineers, Inc.
8345 Lenexa Drive, Suite 300
Lenexa, Kansas 66214
Phone: 913-742-0000

**CMaR**
Miron Construction Co., Inc.
3335 French Court SW
Cedar Rapids, Iowa 52404
Phone: 319-286-5000

# FIELD OF DREAMS MOVIE SITE PROFESSIONAL BALLPARK

**THIS IS IOWA BALLPARK, INC.**
**CITY OF DYERSVILLE**
28995 LANSING RD
DYERSVILLE, IA 52040

KEY PLAN

| ISSUANCE | | DATE |
|---|---|---|
| BP01 | BID PACKAGE 01 | 2023-09-27 |

PROJECT NO: **R3005.232.04**



**STORM PLAN & PROFILE**

C07.12

SHEET SIZE: 30" X 42"
PDFs PRINTED: 9/28/2023 12:39:09 AM

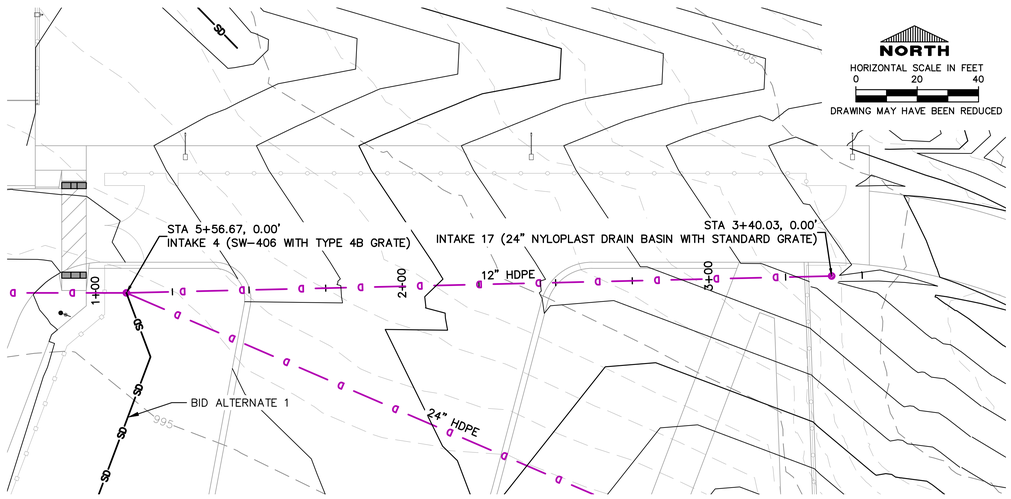


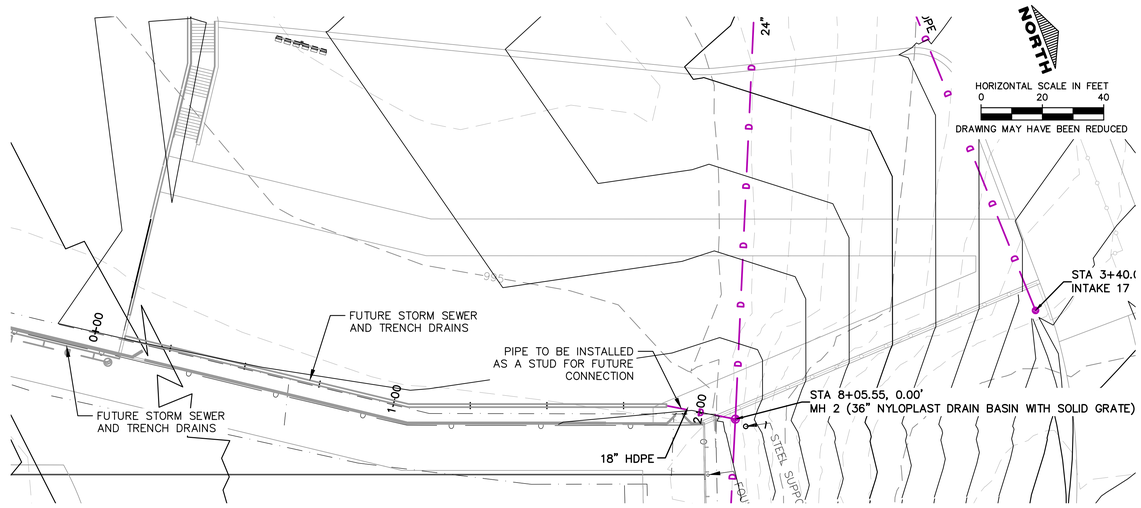


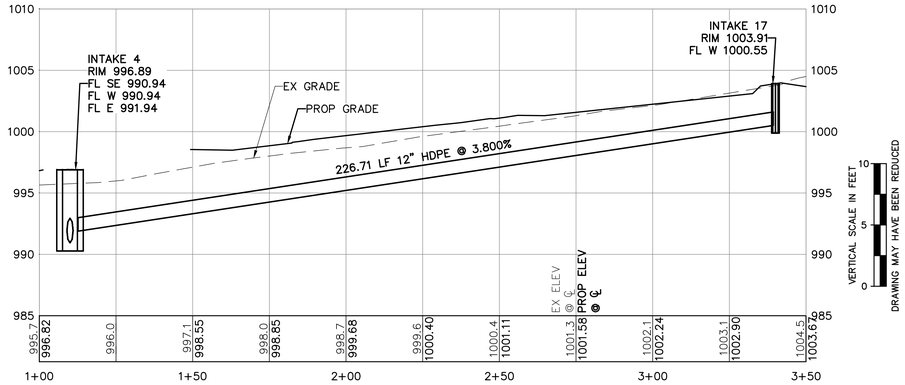


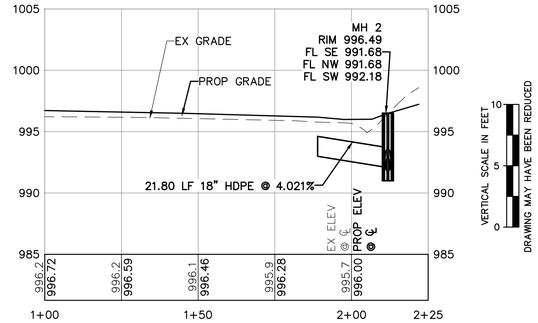


BID PACKAGE 01

RDG PLANNING • DESIGN

**NOT FOR CONSTRUCTION**

FIELD OF DREAMS MOVIE SITE PROFESSIONAL BALLPARK


**ARCHITECT**
RDG Planning & Design
301 Grand Avenue
Des Moines, Iowa 50309
Phone: 515-288-3141

**LANDSCAPE ARCH**
RDG Planning & Design
301 Grand Avenue
Des Moines, Iowa 50309
Phone: 515-288-3141

**CIVIL**
Cryer Design Co.
137 Main Street, Ste. 100
Dubuque, Iowa 52001
Phone: 563-556-2484

**IRRIGATION**
FEG Design Group
167 South Lexington Street
Harrisburg, Pennsylvania 17108
Phone: 608-989-1889

**STRUCTURAL**
Weber & Maurer-Anderson, Inc.
201 East Kenwood Boulevard, Suite 100
Milwaukee, WI 53202
Phone: 913-221-2424

**FPP/MET**
Henderson Engineers, Inc.
8345 Lenexa Drive, Suite 300
Lenexa, Kansas 66214
Phone: 913-742-5000

**LIGHTING**
RDG Planning & Design
301 Grand Avenue
Des Moines, Iowa 50309
Phone: 515-288-3141

**AV / BROADCAST**
Henderson Engineers, Inc.
8345 Lenexa Drive, Suite 300
Lenexa, Kansas 66214
Phone: 913-742-5000

**FOOD & BEVERAGE**
Rapids Foodservice
6201 South Gateway Drive
Cedar Rapids, IA 52404
Phone: 319-447-3515

**ACOUSTICAL**
Henderson Engineers, Inc.
8345 Lenexa Drive, Suite 300
Lenexa, Kansas 66214
Phone: 913-742-5000

**CMaR**
Mortenson Construction Co., Inc.
3335 French Court SW
Cedar Rapids, Iowa 52404
Phone: 319-286-5000


**THIS IS IOWA BALLPARK, INC.**
**CITY OF DYERSVILLE**
28995 LANSING RD
DYERSVILLE, IA 52040

KEY PLAN

| ISSUANCE | | DATE |
|---|---|---|
| BP01 | BID PACKAGE 01 | 2023-09-27 |

PROJECT NO: **R3005.252.04**



**STORM PLAN & PROFILE**

C07.13

SHEET SIZE: 30" X 42"
PDFs PRINTED: 9/28/2023 12:39:28 AM

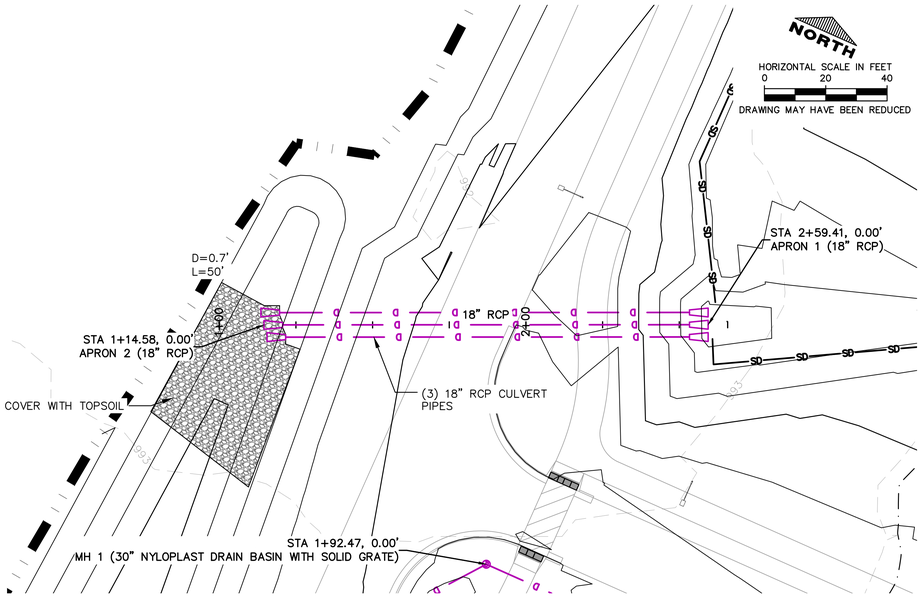


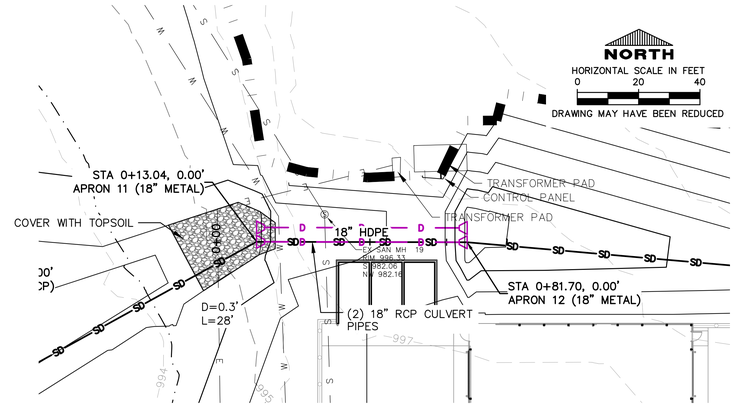


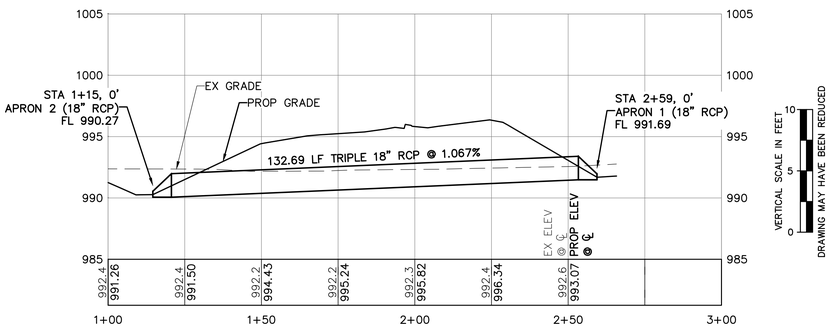


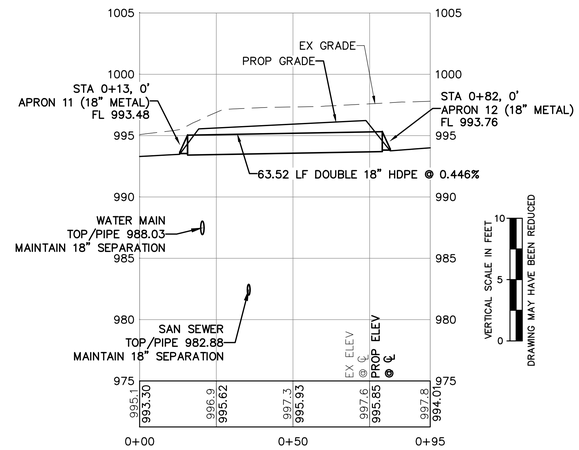


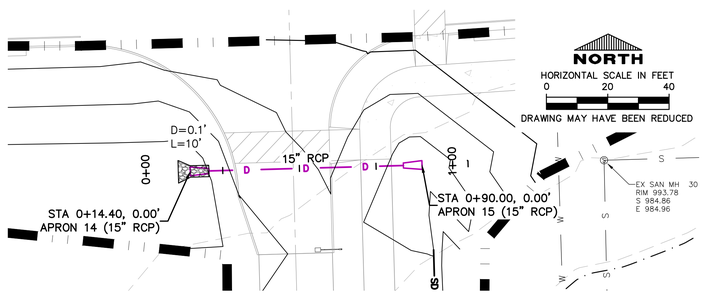


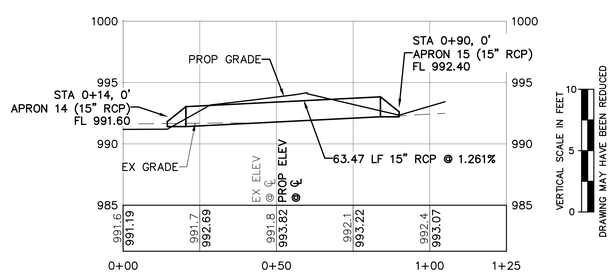


SHEET SIZE: 30" X 42"
PDF# PRINTED: 9/28/2023 12:39:58 AM

BID PACKAGE 01

NOT FOR CONSTRUCTION

RDG PLANNING • DESIGN

ARCHITECT
RDG Planning & Design
301 Grand Avenue
Des Moines, Iowa 50309
Phone: 515-288-3141

LANDSCAPE ARCH
RDG Planning & Design
301 Grand Avenue
Des Moines, Iowa 50309
Phone: 515-288-3141

CIVIL
Cryer Design Co.
137 Main Street, Ste. 100
Dubuque, Iowa 52001
Phone: 563-582-2464

IRRIGATION
FEG Design Group
167 South Lexington Street
Harrisonville, Missouri 64036
Phone: 608-989-1888

STRUCTURAL
Weber & Moore and Assoc. Inc.
201 East Kennedy Boulevard, Suite 700
Lincoln, Nebraska 68508
Phone: 913-221-2424

FP/PMET
Henderson Engineers, Inc.
8345 Lenexa Drive, Suite 300
Lenexa, KS 66214
Phone: 913-742-5000

LIGHTING
RDG Planning & Design
301 Grand Avenue
Des Moines, Iowa 50309
Phone: 515-288-3141

AV / BROADCAST
Henderson Engineers, Inc.
8345 Lenexa Drive, Suite 300
Lenexa, KS 66214
Phone: 913-742-5000

FOOD & BEVERAGE
Rapids Foodservice
6201 South Gateway Drive
Marion, Iowa 52302
Phone: 319-447-3515

ACOUSTICAL
Henderson Engineers, Inc.
8345 Lenexa Drive, Suite 300
Lenexa, KS 66214
Phone: 913-742-5000

CM&R
Mortenson Construction Co., Inc.
3335 French Court SW
Cedar Rapids, Iowa 52404
Phone: 319-286-5000

# FIELD OF DREAMS MOVIE SITE PROFESSIONAL BALLPARK

THIS IS IOWA BALLPARK, INC.
CITY OF DYERSVILLE

28995 LANSING RD
DYERSVILLE, IA 52040

KEY PLAN

| ISSUANCE | | DATE |
|---|---|---|
| BP01 | BID PACKAGE 01 | 2023-09-27 |

PROJECT NO: R3005.252.04


THIS DRAWING MAY NOT REPRESENT ALL CHANGES THAT HAVE OCCURRED DURING BID OR CONSTRUCTION PHASES. CONSTRUCTION DOCUMENTS, ADDENDA AND CHANGE DOCUMENTS REMAIN THE OFFICIAL CONSTRUCTION DOCUMENTS.

## STORM PLAN & PROFILE

C07.14

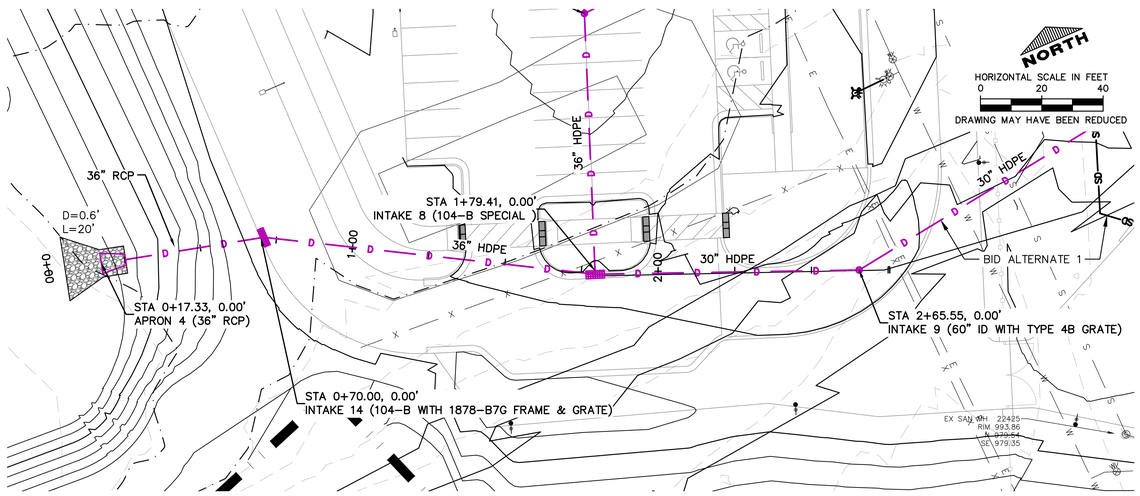


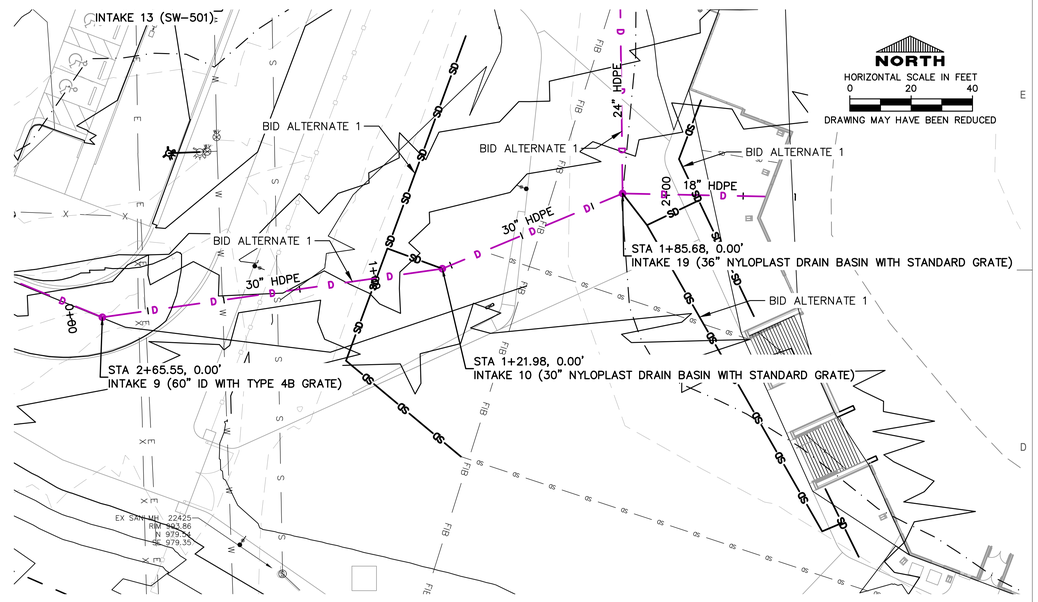


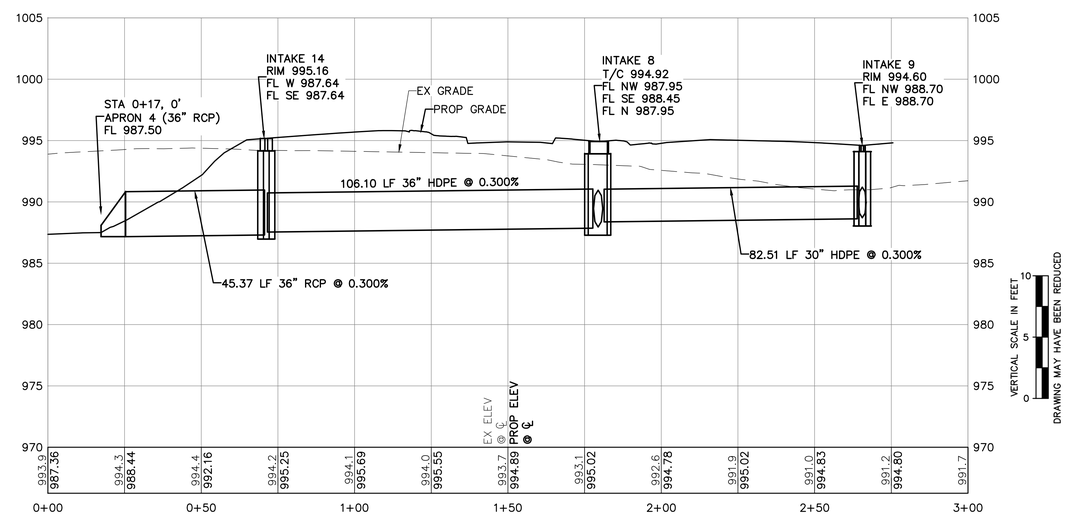


INTAKE 9 APART OF BASE BID.
REMAINING STORM IN PROFILE
APART OF ALTERNATE BID.

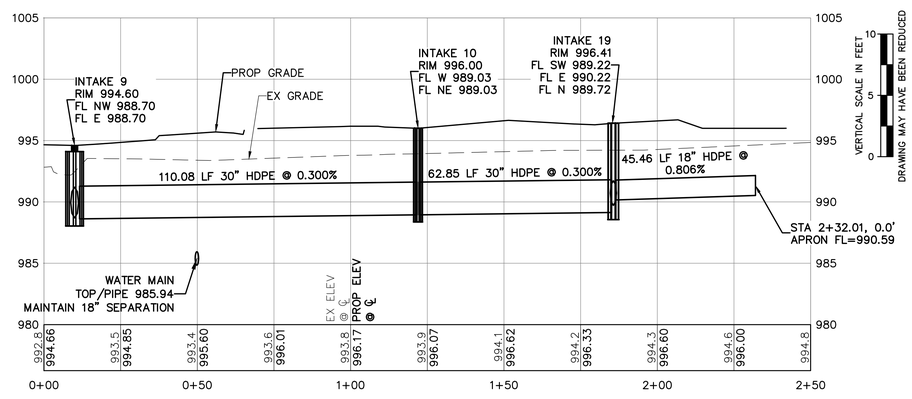


22131 Storm14 PROFILE

BID PACKAGE 01

RDG PLANNING • DESIGN

NOT FOR CONSTRUCTION

FIELD OF DREAMS MOVIE SITE PROFESSIONAL BALLPARK


ARCHITECT
RDG Planning & Design
301 Grand Avenue
Des Moines, IA 50309
Phone: 515-288-3141

LANDSCAPE ARCH
RDG Planning & Design
301 Grand Avenue
Des Moines, IA 50309
Phone: 515-288-3141

CIVIL
Cryer Design Co.
137 Main Street, Ste. 100
Dyersville, IA 52040
Phone: 563-506-2464

IRRIGATION
FEG Design Group
167 South Lexington Street
Schaumburg, IL 60193
Phone: 608-988-1889

STRUCTURAL
Weber & Moore and Assoc. Inc.
201 East Kennedy Boulevard, Suite 100
Des Moines, IA 50309
Phone: 515-221-2424

FPP/MET
Henderson Engineers, Inc.
8345 Lenexa Drive, Suite 300
Lenexa, KS 66214
Phone: 913-742-5000

LIGHTING
RDG Planning & Design
301 Grand Avenue
Des Moines, IA 50309
Phone: 515-288-3141

AV / BROADCAST
Henderson Engineers, Inc.
8345 Lenexa Drive, Suite 300
Lenexa, KS 66214
Phone: 913-742-5000

FOOD & BEVERAGE
Rapids Foodservice
6201 South Gateway Drive
Cedar Rapids, IA 52404
Phone: 319-447-3515

ACOUSTICAL
Henderson Engineers, Inc.
8345 Lenexa Drive, Suite 300
Lenexa, KS 66214
Phone: 913-742-5000

CM&R
Mortenson Construction Co., Inc.
3335 French Court SW
Cedar Rapids, IA 52404
Phone: 319-286-5000


THIS IS IOWA BALLPARK, INC.
CITY OF DYERSVILLE

28995 LANSING RD
DYERSVILLE, IA 52040

KEY PLAN

| ISSUANCE | | DATE |
|---|---|---|
| BP01 | BID PACKAGE 01 | 2023-09-27 |

PROJECT NO: R3005.252.04



THIS DRAWING MAY NOT REPRESENT ALL CHANGES THAT HAVE OCCURRED DURING BID OR CONSTRUCTION PHASES. CONSTRUCTION DOCUMENTS, ADDENDA AND CHANGE DOCUMENTS REMAIN THE OFFICIAL CONSTRUCTION DOCUMENTS.

STORM PLAN & PROFILE

C07.15

SHEET SIZE: 30" X 42"
PDF-x PRINTED: 9/28/2023 12:40:15 AM

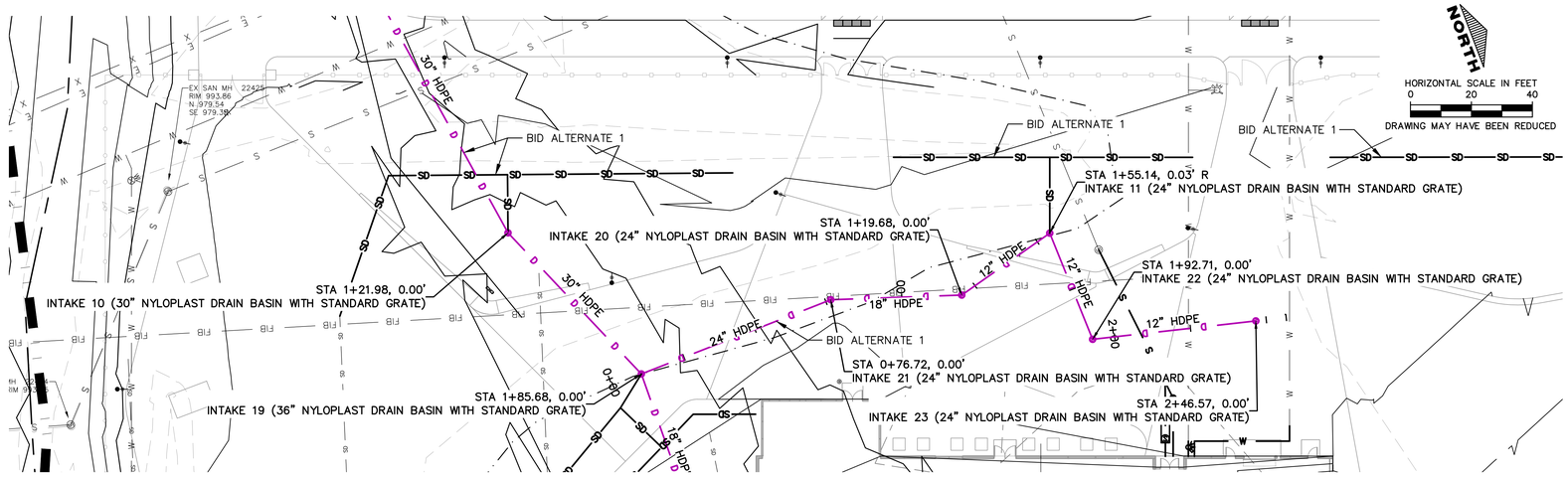


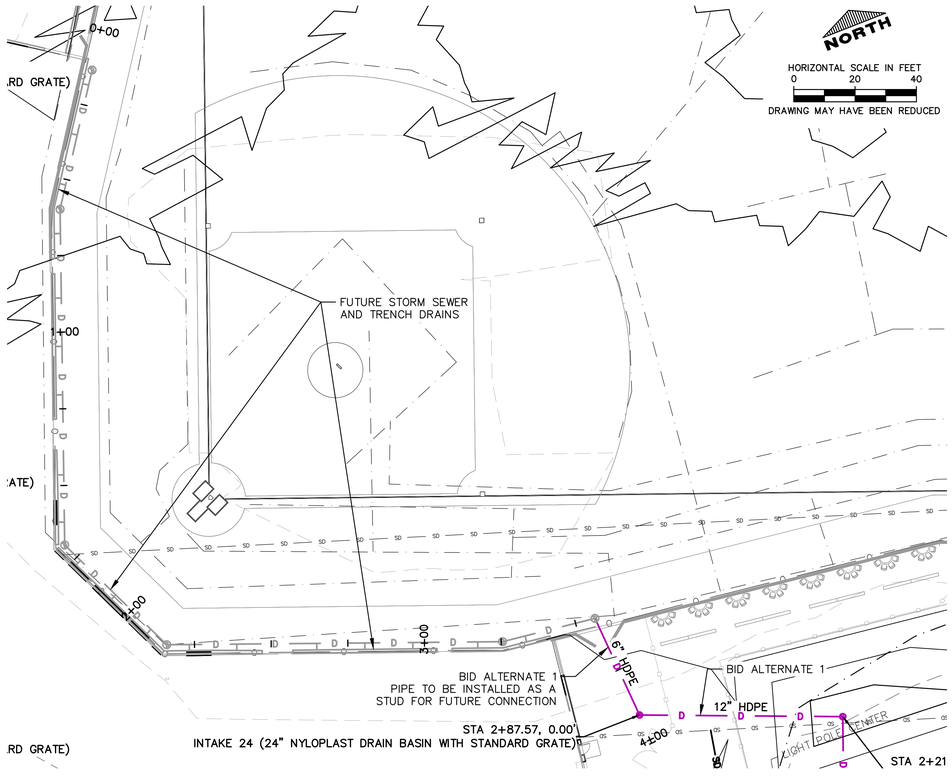


STORM IN PROFILE APART
OF BID ALTERNATE 1.

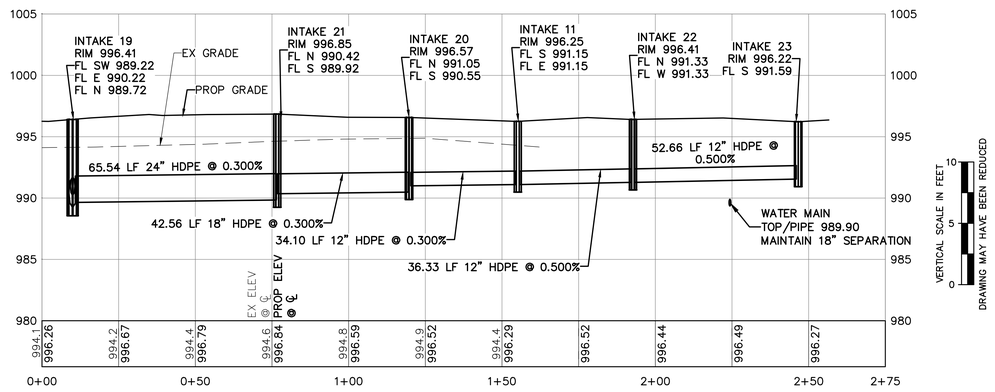


STORM IN PROFILE APART
OF BID ALTERNATE 1.

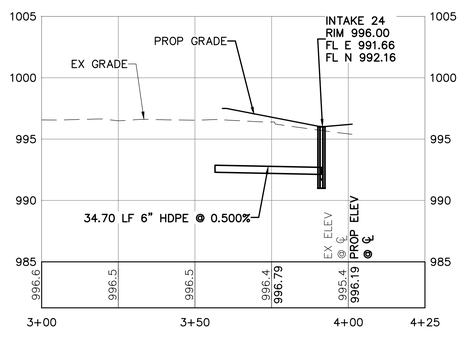


SHEET SIZE: 30" X 42"
PDF's PRINTED: 9/20/2023 12:40:15 AM

# BID PACKAGE 01

# NOT FOR CONSTRUCTION

# FIELD OF DREAMS MOVIE SITE PROFESSIONAL BALLPARK


**ARCHITECT**
RDG Planning & Design
301 Grand Avenue
Des Moines, Iowa 50309
Phone: 515-288-3141

**LANDSCAPE ARCH**
RDG Planning & Design
301 Grand Avenue
Des Moines, Iowa 50309
Phone: 515-288-3141

**CIVIL**
Dyer Design Co.
137 Main Street, Ste. 100
Dyersville, Iowa 52040
Phone: 563-506-2464

**IRRIGATION**
FEG Design Group
167 South Lexington Street
Dyersville, Iowa 52040
Phone: 608-989-1888

**STRUCTURAL**
Weber & Weaver-and-Assoc. Inc.
201 East Kennedy Boulevard, Suite 100
Lake Mary, FL 32746
Phone: 813-221-2424

**FP/PMET**
Henderson Engineers, Inc.
8345 Lenexa Drive, Suite 300
Lenexa, KS 66214
Phone: 913-742-5000

**LIGHTING**
RDG Planning & Design
301 Grand Avenue
Des Moines, Iowa 50309
Phone: 515-288-3141

**AV / BROADCAST**
Henderson Engineers, Inc.
8345 Lenexa Drive, Suite 300
Lenexa, KS 66214
Phone: 913-742-5000

**FOOD & BEVERAGE**
Rapids Foodservice
6201 South Gateway Drive
Cedar Rapids, IA 52404
Phone: 319-447-3315

**ACOUSTICAL**
Henderson Engineers, Inc.
8345 Lenexa Drive, Suite 300
Lenexa, KS 66214
Phone: 913-742-5000

**CMaR**
Miron Construction Co., Inc.
3335 French Court SW
Cedar Rapids, IA 52404
Phone: 319-286-5000

RDG
PLANNING • DESIGN


**THIS IS IOWA BALLPARK, INC.**
**CITY OF DYERSVILLE**
28995 LANSING RD
DYERSVILLE, IA 52040

KEY PLAN

| ISSUANCE | | DATE |
|---|---|---|
| BP01 | BID PACKAGE 01 | 2023-09-27 |

PROJECT NO: **R3005.252.04**



**STORM PLAN & PROFILE**

C07.16

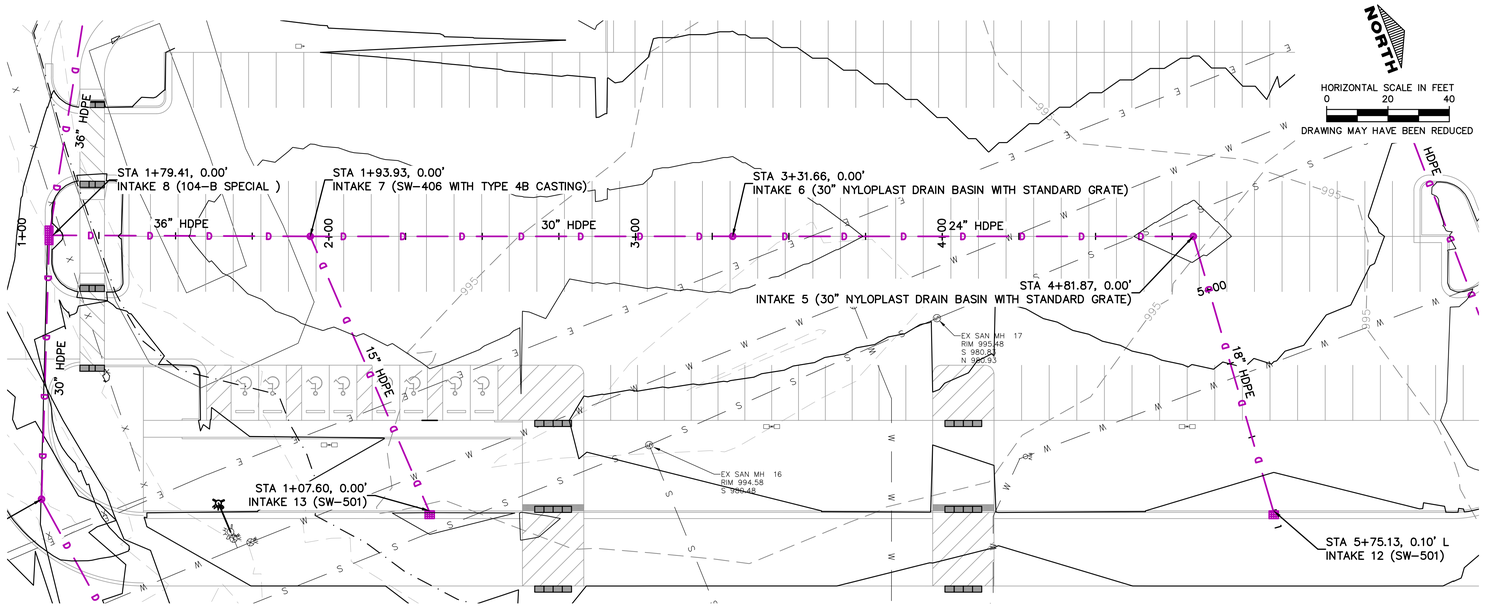


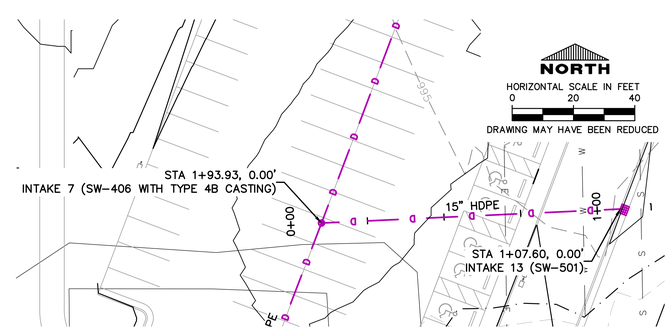


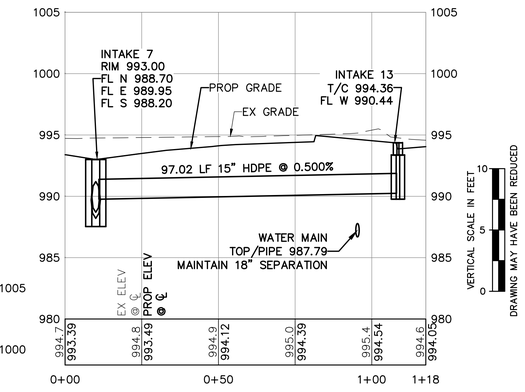


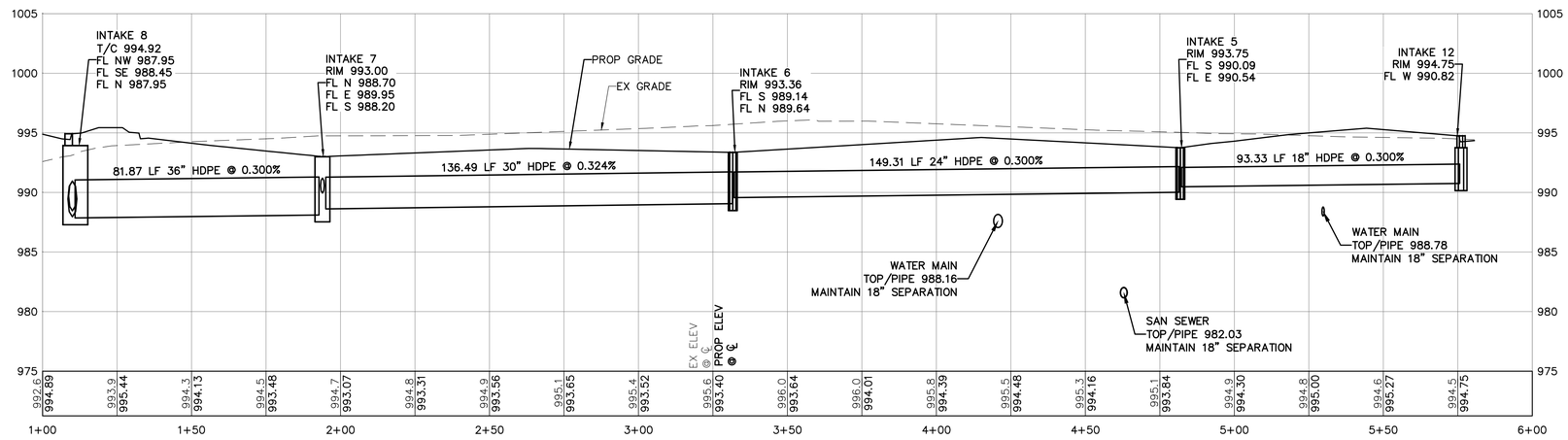


SHEET SIZE: 30" X 42"
PDFs PRINTED: 9/28/2023 12:45:53 AM

NOT FOR CONSTRUCTION

FIELD OF DREAMS MOVIE SITE PROFESSIONAL BALLPARK

BID PACKAGE 01

RDG PLANNING • DESIGN


ARCHITECT
RDG Planning & Design
301 Grand Avenue
Des Moines, Iowa 50309
Phone: 515-288-3141

LANDSCAPE ARCH
RDG Planning & Design
301 Grand Avenue
Des Moines, Iowa 50309
Phone: 515-288-3141

CIVIL
Cryer Design Co.
137 Main Street, Ste. 100
Dubuque, Iowa 52001
Phone: 563-582-2464

IRRIGATION
RDG Design Group
167 South Lexington Street
Harrisonville, Missouri 64701
Phone: 608-989-1889

STRUCTURAL
Weber & Moore and Assoc. Inc.
201 East Kennedy Boulevard, Suite 100
Lake Mary, FL 32746
Phone: 813-221-2424

FPP/MET
Henderson Engineers, Inc.
8345 Lenexa Drive, Suite 300
Lenexa, KS 66214
Phone: 913-742-5000

LIGHTING
RDG Planning & Design
301 Grand Avenue
Des Moines, Iowa 50309
Phone: 515-288-3141

AV / BROADCAST
Henderson Engineers, Inc.
8345 Lenexa Drive, Suite 300
Lenexa, KS 66214
Phone: 913-742-5000

FOOD & BEVERAGE
Rapids Foodservice
6201 South Gateway Drive
Cedar Rapids, IA 52404
Phone: 319-447-3515

ACOUSTICAL
Henderson Engineers, Inc.
8345 Lenexa Drive, Suite 300
Lenexa, KS 66214
Phone: 913-742-5000

CM&R
Mortenson Construction Co., Inc.
2335 French Court SW
Cedar Rapids, IA 52404
Phone: 319-286-5000


THIS IS IOWA BALLPARK, INC.
CITY OF DYERSVILLE

28995 LANSING RD
DYERSVILLE, IA 52040

KEY PLAN

| ISSUANCE | | DATE |
|---|---|---|
| BP01 | BID PACKAGE 01 | 2023-09-27 |

PROJECT NO: R3005.252.04



STORM PLAN & PROFILE

C07.17

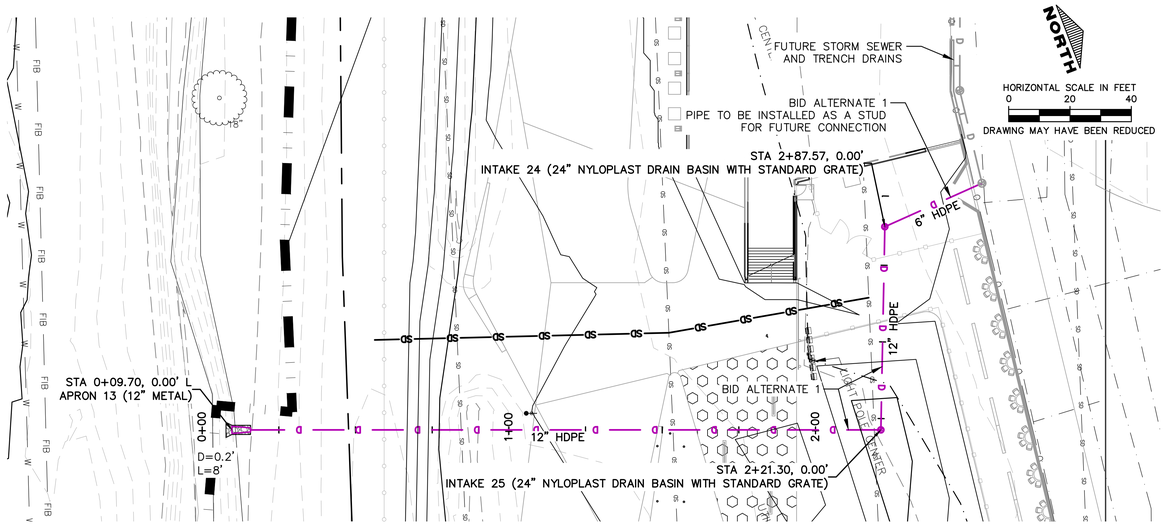


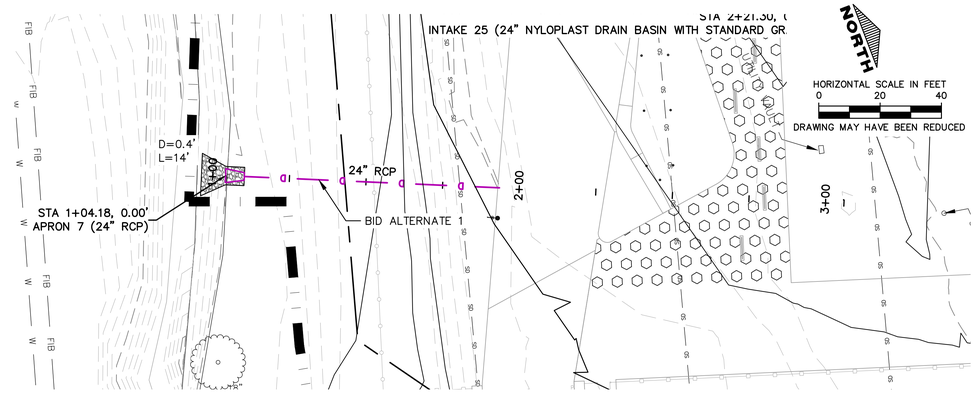


STORM IN PROFILE APART OF BID ALTERNATE 1.

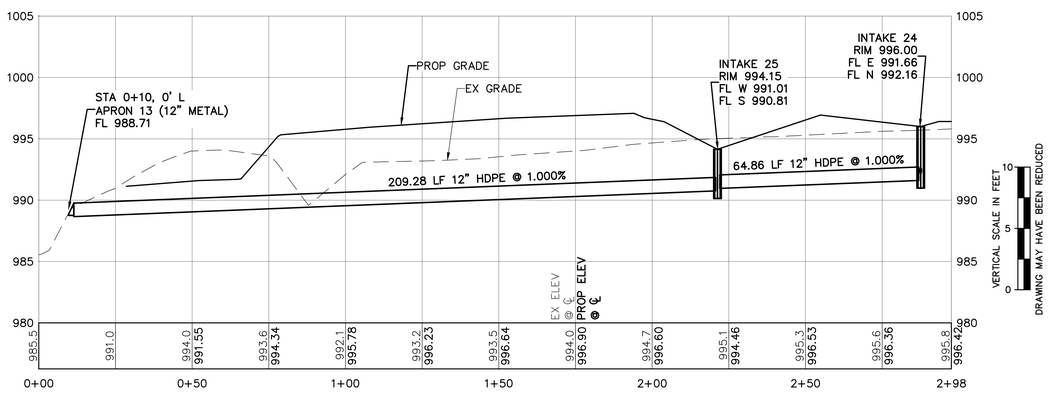


STORM IN PROFILE APART OF BID ALTERNATE 1.

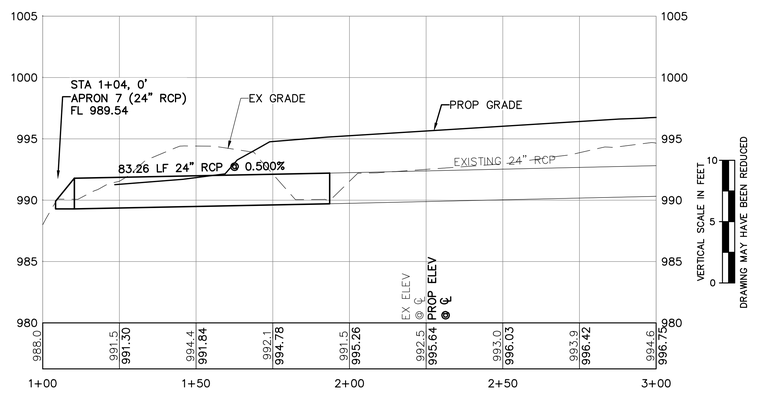


BID PACKAGE 01

NOT FOR CONSTRUCTION

FIELD OF DREAMS MOVIE SITE PROFESSIONAL BALLPARK

RDG PLANNING • DESIGN


ARCHITECT
RDG Planning & Design
301 Grand Avenue
Des Moines, Iowa 50309
Phone: 515-288-3141

LANDSCAPE ARCH
RDG Planning & Design
301 Grand Avenue
Des Moines, Iowa 50309
Phone: 515-288-3141

CIVIL
Cryer Design Co.
137 Main Street, Ste. 100
Dubuque, Iowa 52001
Phone: 563-582-2464

IRRIGATION
FEG Design Group
167 South Lexington Street
Schaumburg, Illinois 60193
Phone: 630-980-1889

STRUCTURAL
Weber & Bauer and Assoc. Inc.
201 East Kenwood Boulevard, Suite 100
Lake Mills, Iowa 50450
Phone: 913-221-2424

FP/PMET
Henkinson Engineers, Inc.
8345 Lenexa Drive, Suite 300
Lenexa, Kansas 66214
Phone: 913-742-5000

LIGHTING
RDG Planning & Design
301 Grand Avenue
Des Moines, Iowa 50309
Phone: 515-288-3141

AV / BROADCAST
Henkinson Engineers, Inc.
8345 Lenexa Drive, Suite 300
Lenexa, Kansas 66214
Phone: 913-742-5000

FOOD & BEVERAGE
Fluents Foodservice
6201 South Gateway Drive
Mason City, Iowa 50401
Phone: 319-441-3315

ACOUSTICAL
Henkinson Engineers, Inc.
8345 Lenexa Drive, Suite 300
Lenexa, Kansas 66214
Phone: 913-742-5000

CMaR
Martin Construction Co., Inc.
335 French Court SW
Cedar Rapids, Iowa 52404
Phone: 319-298-5000


**THIS IS IOWA BALLPARK, INC.**
**CITY OF DYERSVILLE**

28995 LANSING RD
DYERSVILLE, IA 52040

KEY PLAN

| ISSUANCE | | DATE |
|---|---|---|
| BP01 | BID PACKAGE 01 | 2023-09-27 |

PROJECT NO: **R3005.252.04**



**STORM PLAN & PROFILE**

C07.18

SHEET SIZE: 30" X 42"
PDF+ PRINTED: 9/28/2023 12:41:12 AM

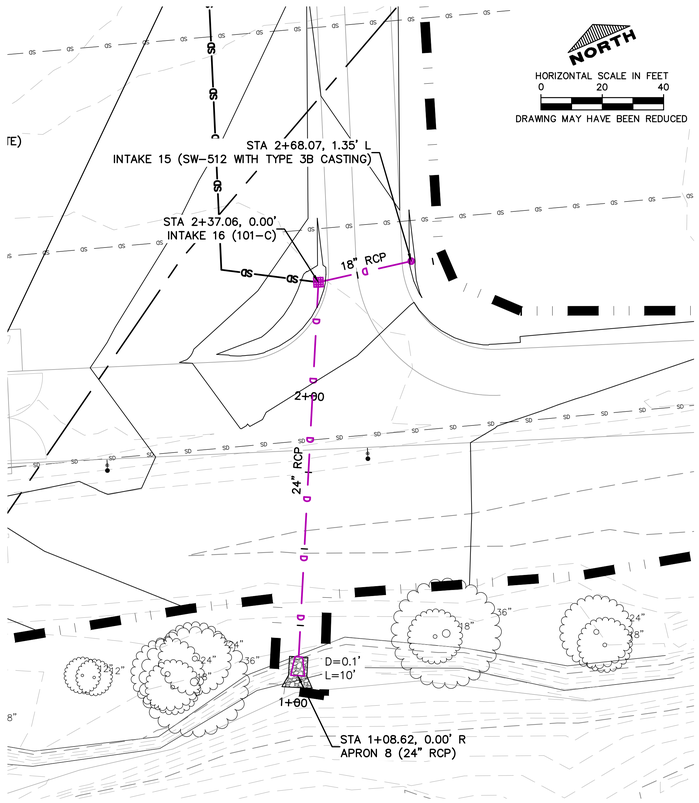


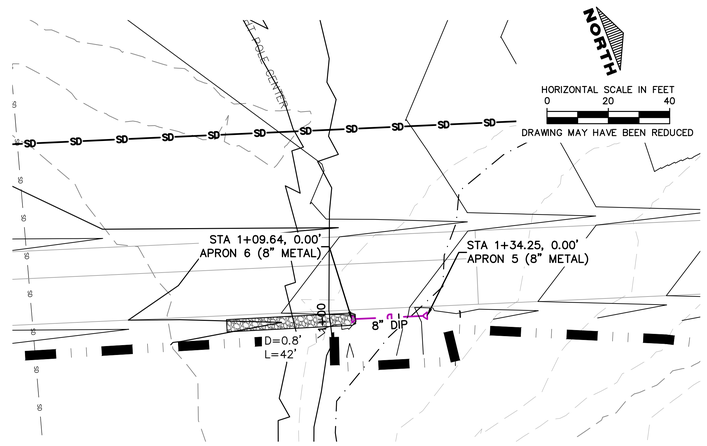


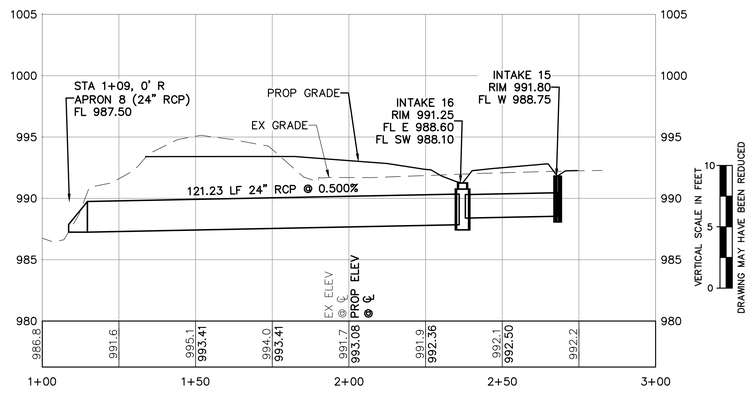


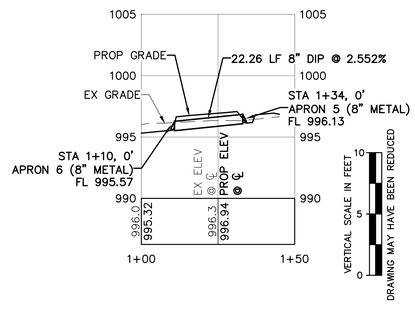


BID PACKAGE 01

NOT FOR CONSTRUCTION

FIELD OF DREAMS MOVIE SITE PROFESSIONAL BALLPARK


**ARCHITECT**
RDG Planning & Design
301 Grand Avenue
Des Moines, IA 50309
Phone: 515-288-3141

**LANDSCAPE ARCH**
RDG Planning & Design
301 Grand Avenue
Des Moines, IA 50309
Phone: 515-288-3141

**CIVIL**
Cryer Design Co.
137 Main Street, Ste. 100
Dyersville, IA 52040
Phone: 563-506-2464

**IRRIGATION**
FEG Design Group
167 South Lexington Street
Platteville, Wisconsin 53818
Phone: 608-988-1889

**STRUCTURAL**
Weber & Rhoades Assoc. Inc.
201 East Kennedy Boulevard, Suite 700
Lansing, IA 52151
Phone: 913-221-2424

**FP/PMET**
Henderson Engineers, Inc.
8345 Lenexa Drive, Suite 300
Lenexa, KS 66214
Phone: 913-742-5000

**LIGHTING**
RDG Planning & Design
301 Grand Avenue
Des Moines, IA 50309
Phone: 515-288-3141

**AV / BROADCAST**
Henderson Engineers, Inc.
8345 Lenexa Drive, Suite 300
Lenexa, KS 66214
Phone: 913-742-5000

**FOOD & BEVERAGE**
Rapids Foodservice
6201 South Gateway Drive
Minneapolis, MN
Phone: 319-447-3515

**ACOUSTICAL**
Henderson Engineers, Inc.
8345 Lenexa Drive, Suite 300
Lenexa, KS 66214
Phone: 913-742-5000

**CM&R**
Mortenson Construction Co., Inc.
335 French Court SW
Cedar Rapids, IA 52404
Phone: 319-286-5000


RDG PLANNING • DESIGN

**THIS IS IOWA BALLPARK, INC.**
**CITY OF DYERSVILLE**

28995 LANSING RD
DYERSVILLE, IA 52040

KEY PLAN

| ISSUANCE | | DATE |
|---|---|---|
| BP01 | BID PACKAGE 01 | 2023-09-27 |

PROJECT NO: **R3005.252.04**



**STORM PLAN & PROFILE**

C07.19

SHEET SIZE: 30" X 42"
PDF# PRINTED: 9/28/2023 12:41:28 AM

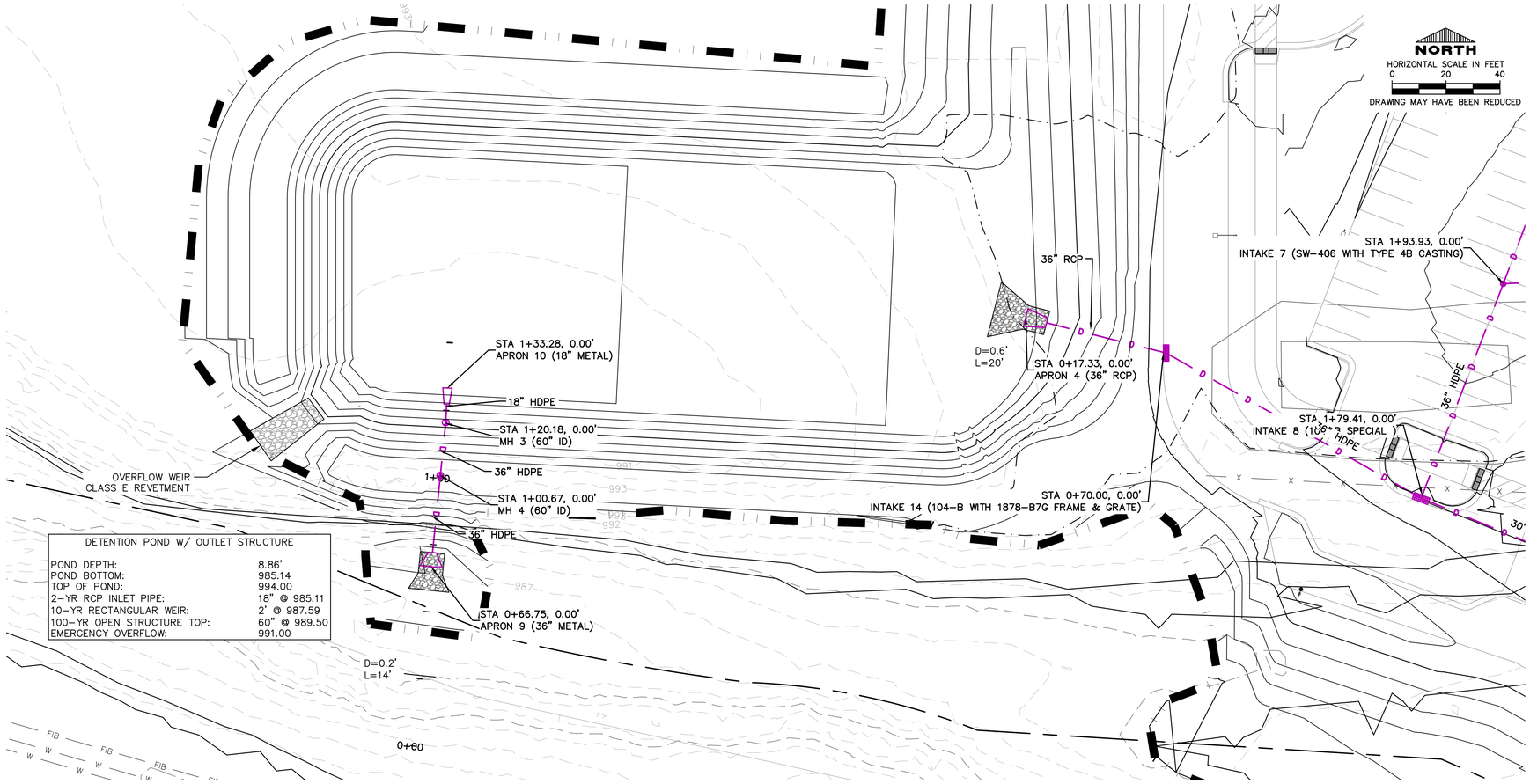


DETENTION POND W/ OUTLET STRUCTURE

| | |
|---|---|
| POND DEPTH: | 8.86' |
| POND BOTTOM: | 985.14 |
| TOP OF POND: | 994.00 |
| 2-YR RCP INLET PIPE: | 18" @ 985.11 |
| 10-YR RECTANGULAR WEIR: | 2' @ 987.59 |
| 100-YR OPEN STRUCTURE TOP: | 60" @ 989.50 |
| EMERGENCY OVERFLOW: | 991.00 |

1 C07.20 DETENTION PLAN VIEW NOT TO SCALE

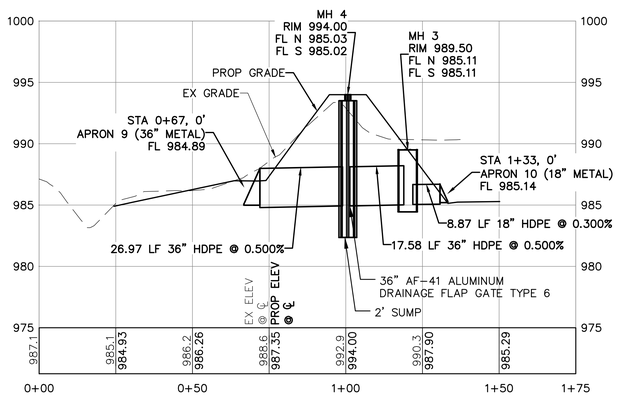


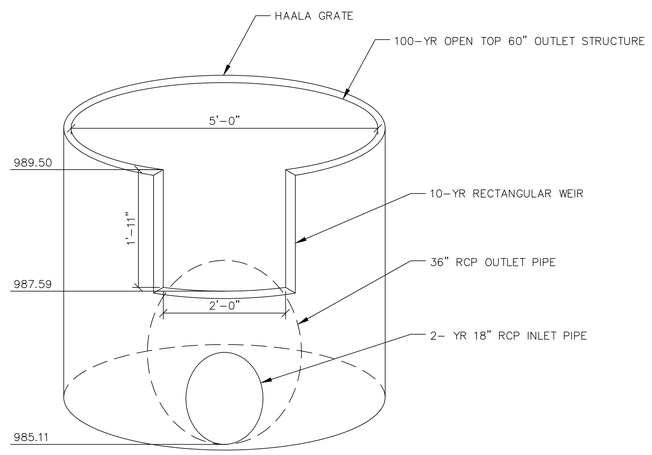


2 C07.20 OUTLET STRUCTURE DETAIL DETENTION POND NOT TO SCALE

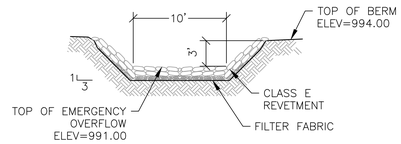


3 C07.20 EMERGENCY OVERFLOW WEIR DETENTION POND NOT TO SCALE

SHEET SIZE: 30" X 42"
PDF-PRINTED: 9/28/2023 12:41:44 AM

NOT FOR CONSTRUCTION

BID PACKAGE 01

FIELD OF DREAMS MOVIE SITE PROFESSIONAL BALLPARK


ARCHITECT
RDG Planning & Design
301 Grand Avenue
Des Moines, Iowa 50309
Phone: 515-288-3141

LANDSCAPE ARCH
RDG Planning & Design
301 Grand Avenue
Des Moines, Iowa 50309
Phone: 515-288-3141

CIVIL
Cryer Design Co.
137 Main Street, Ste. 100
Dyersville, Iowa 52040
Phone: 563-506-2464

IRRIGATION
FEG Design Group
167 South Lexington Street
Harrisburg, Pennsylvania 17108
Phone: 608-989-1889

STRUCTURAL
Weber & Weyers and Assoc. Inc.
201 East Kennedy Boulevard, Suite 700
Lansing, Iowa 52151
Phone: 913-221-2424

FPP/MET
Henderson Engineers, Inc.
8345 Lenexa Drive, Suite 300
Lenexa, Kansas 66214
Phone: 913-742-5000

LIGHTING
RDG Planning & Design
301 Grand Avenue
Des Moines, Iowa 50309
Phone: 515-288-3141

AV / BROADCAST
Henderson Engineers, Inc.
8345 Lenexa Drive, Suite 300
Lenexa, Kansas 66214
Phone: 913-742-5000

FOOD & BEVERAGE
Rapids Foodservice
6201 South Gateway Drive
Cedar Rapids, Iowa 52404
Phone: 319-447-3515

ACOUSTICAL
Henderson Engineers, Inc.
8345 Lenexa Drive, Suite 300
Lenexa, Kansas 66214
Phone: 913-742-5000

CM&R
Mortenson Construction Co., Inc.
2335 French Court SW
Cedar Rapids, Iowa 52404
Phone: 319-286-5000

RDG
PLANNING • DESIGN


THIS IS IOWA BALLPARK, INC.
CITY OF DYERSVILLE

28995 LANSING RD
DYERSVILLE, IA 52040

KEY PLAN

| ISSUANCE | | DATE |
|---|---|---|
| DD-S | DD SITE PACKAGE | 2023-06-14 |

PROJECT NO: R3005.252.04



THIS DRAWING MAY NOT REPRESENT ALL CHANGES THAT HAVE OCCURRED DURING BID OR CONSTRUCTION PHASES. CONSTRUCTION DOCUMENTS, ADDENDA AND CHANGE DOCUMENTS REMAIN THE OFFICIAL CONSTRUCTION DOCUMENTS.

DETENTION POND DETAIL

C07.20