CITY OF DODGEVILLE
DESIGN REVIEW APPLICATION
Reference Chapter 17.29

Date: 07/02/2025

To: Design Review Board
City of Dodgeville

Applicant: Dodgeville Agri-Service
Address: 208 King Street, Dodgeville, WI 53533
Phone: 608-732-0010 Email: bleibfried@vitaplus.com

Owner of Property if other than Applicant
Name:
Address:
Phone: Email:

Names of Architect, professional engineer, or contractor if any:

VITA BUILDERS LLC.-GENERAL	
MCMAHON ASSOC., Inc. - ENGINEER	

Street Address of Property: 208 King Street, Dodgeville, WI 53533 Parcel # 216-1074.E
Legal Description:
Parcel 1074 and Parcel 1074.A

Type of Structure: Loadout Structure with fill equipment
Signage:
Exterior lighting: Yes. On and under structure for truck traffic
Landscaping:

Zoning District of Proposed site: M-L Limited Industrial

Date of Application Submittal: _____ (*To be filled in by City Staff*)

Who will appear at the hearing? Vita Builders LLC.(Glenn Andler and/or Bryce Arnes)

APPLICANT OR AGENT FOR APPLICANT MUST APPEAR AT THE HEARING

2nd page is for Design Review Board use only

CITY OF DODGEVILLE
CERTIFICATE OF DESIGN REVIEW

Reference Chapter 17.29

Date: _____

To: Building Inspector
City of Dodgeville

Applicant: Dodgeville Agri-Service
Address: 208 King Street, Dodgeville, WI 53531
Phone: 608-732-0010 Email: bleibfried@vitaplus.com

Owner of Property if other than Applicant
Name: _____
Address: _____
Phone: _____
Email: _____

Property Address: 208 King Street, Dodgeville, WI 5353 Parcel # 216-1074.E

CONDITIONS OF APPROVAL

_____

Design Review Chairman or Committee member

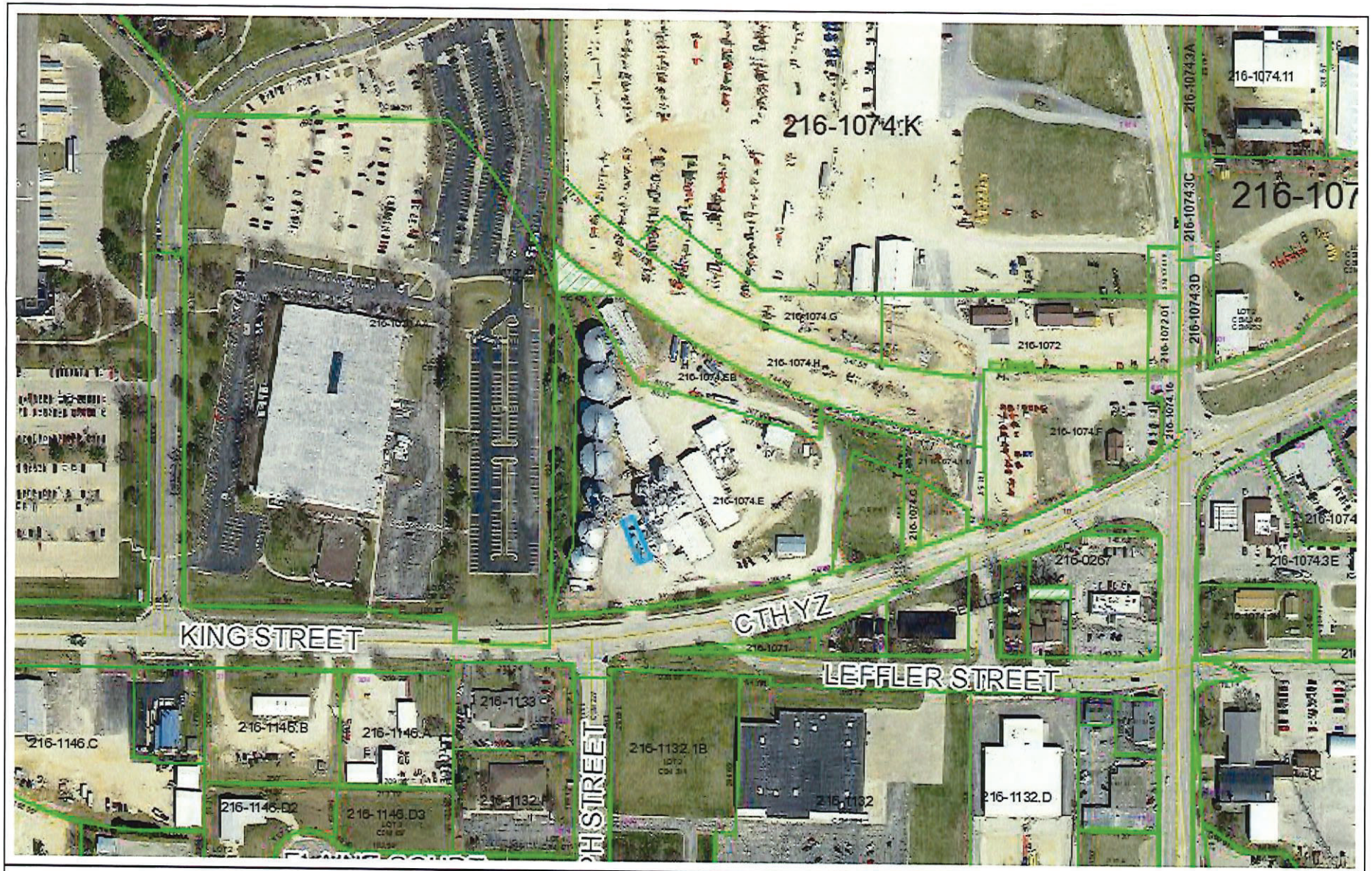

Dodgeville Agri Service

DISCLAIMER: No guarantee in the accuracy of the material contained here in and is not responsible for any misuse or misrepresentation of this information or its derivatives.

SCALE: 1" = 250 '

Print Date: 5/7/2025

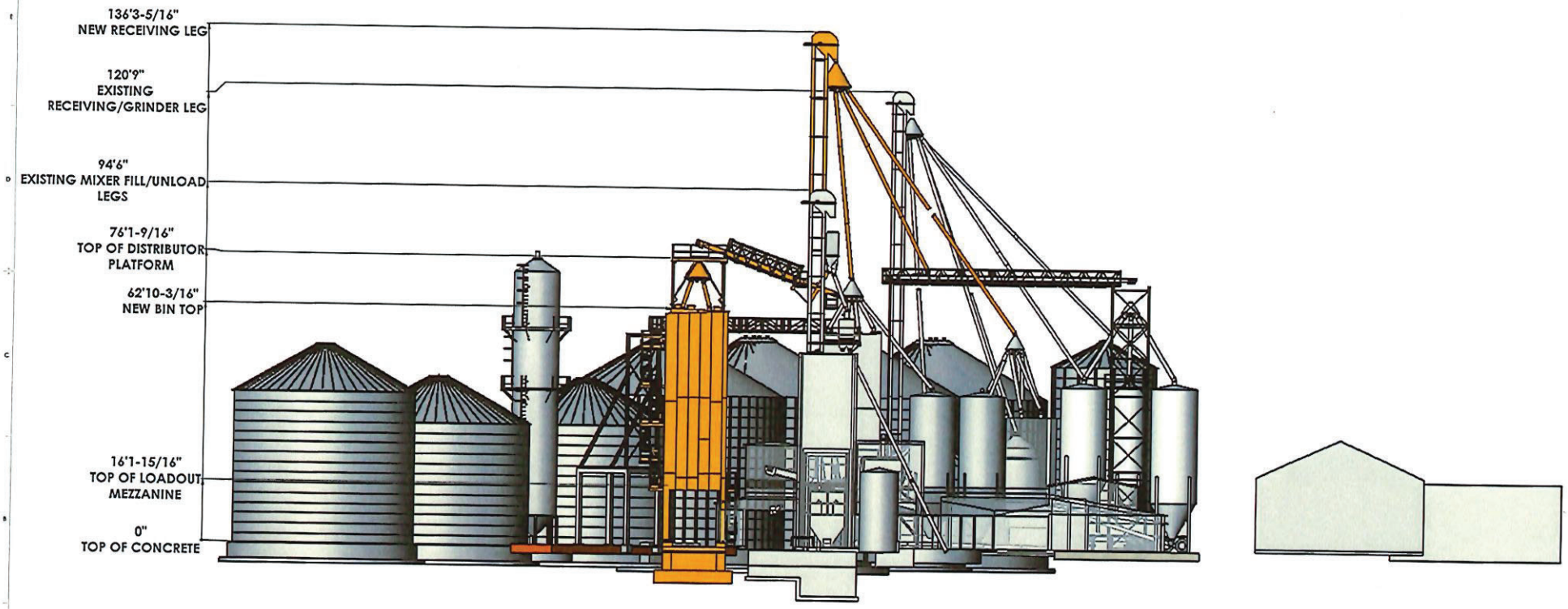

VITA BUILDERS LLC

TITLE: VP Dodgeville Layout 2025-1

SIZE D | DWG. NO. 30054450 | REV -

SCALE: 1:100 WEIGHT: | SHEET 1 OF 4

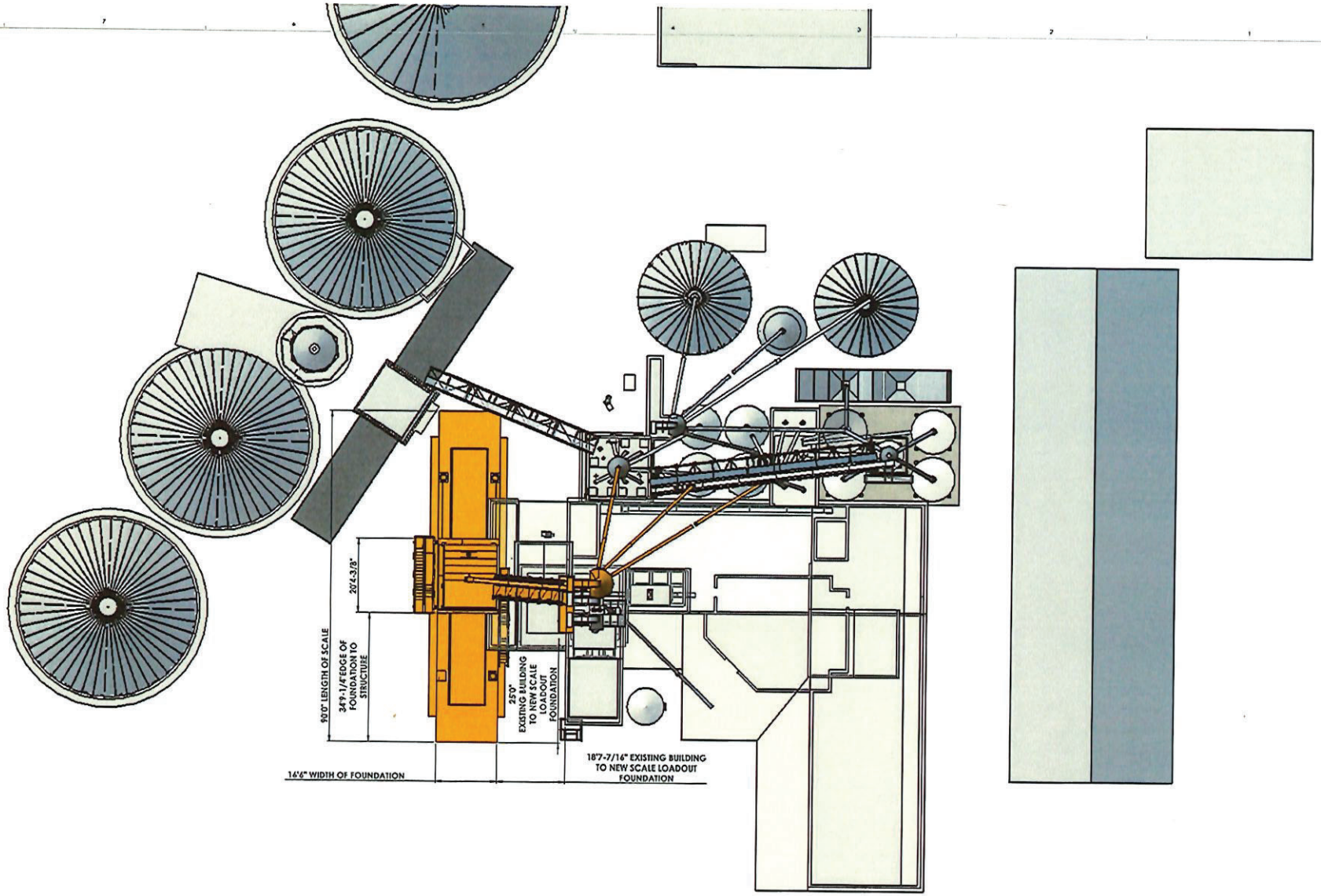

VITA BUILDERS LLC

TITLE: VP Dodgeville Layout 2025-1

SIZE D | DWG. NO. 30054450 | REV

SCALE: 1:100(IN LIGHT) | SHEET 2 OF 4

VP Dodgeville Layout 2025-1.dwg 02-04-25

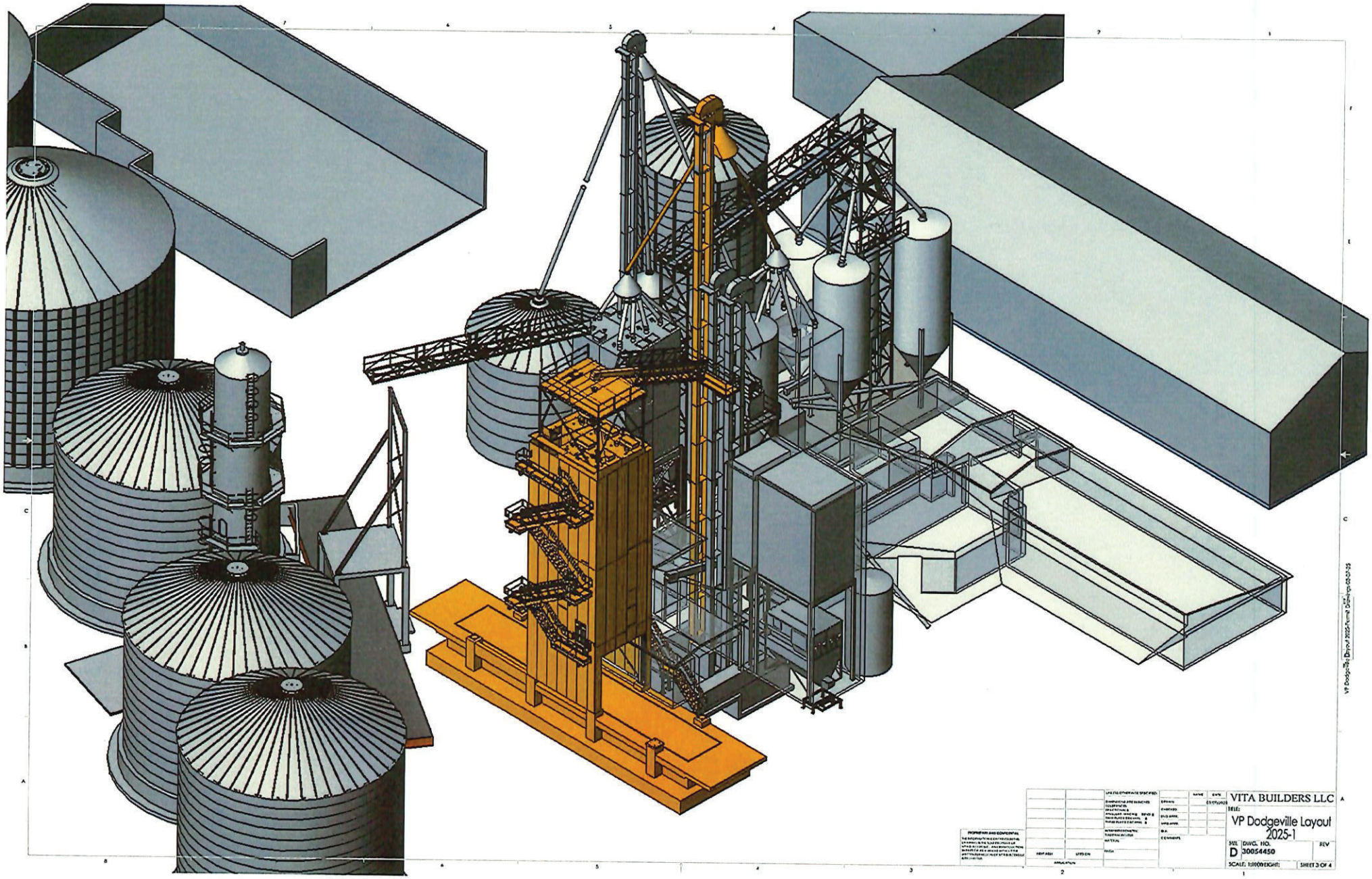

		UNLESS OTHERWISE SPECIFIED:		NAME	DATE	VITA BUILDERS LLC
		DIMENSIONS ARE IN INCHES TOLERANCES: FRACTIONAL ± ANGULAR: MACH ± BEND ± TWO PLACE DECIMAL ± THREE PLACE DECIMAL ±	DRAWN		3/07/2025	TITLE: VP Dodgeville Layout 2025-1
			CHECKED			
			ENG APPR.			
			MFG APPR.			
		INTERPRET GEOMETRIC TOLERANCING PER:	Q.A.			
		MATERIAL	COMMENTS:			
		FINISH				SIZE D DWG. NO. 30054450 REV
NEXT ASSY	USED ON					SCALE: 1:1000 (EIGHT) SHEET 3 OF 4
APPLICATION						

PROPRIETARY AND CONFIDENTIAL
THE INFORMATION CONTAINED IN THIS DRAWING IS THE SOLE PROPERTY OF <INSERT YOUR COMPANY HERE>. ANY REPRODUCTION IN PART OR AS A WHOLE WITHOUT THE WRITTEN PERMISSION OF <INSERT YOUR COMPANY HERE> IS PROHIBITED.

VP Dodgeville Demo-1 2025-Layout 3.DWG

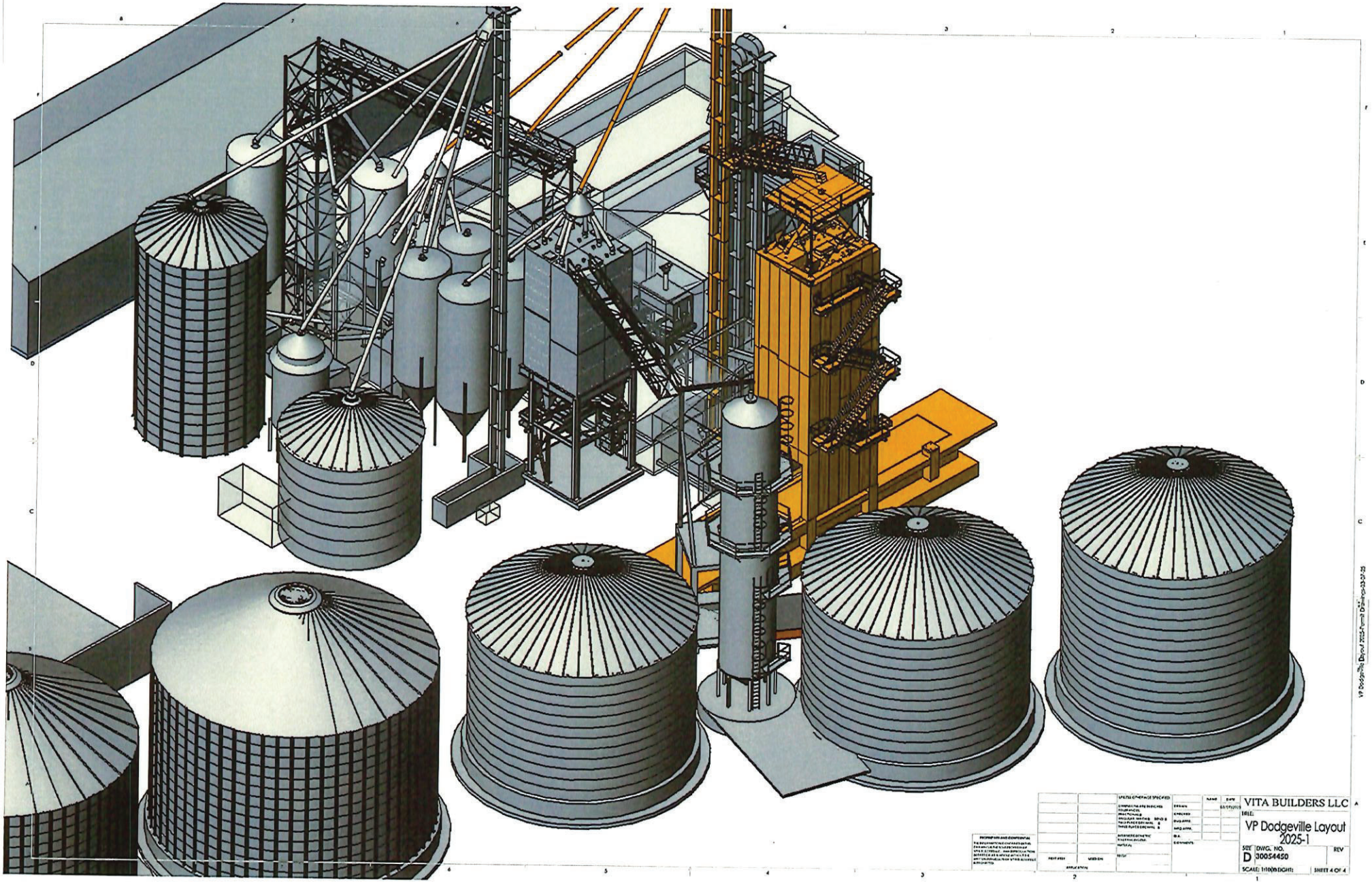

					VITA BUILDERS LLC
					TITLE: VP Dodgeville Layout 2025-1
					SIZE D DWG. NO. 30054450 REV
					SCALE: 1/16(IN EQUAL) SHEET 4 OF 4

LOADOUT STRUCTURE FOR:
VITA PLUS DODGEVILLE

DODGEVILLE, WI

SHEET INDEX

SHEET NO.	SHEET DESCRIPTION	ISSUED FOR... DATE							
GENERAL									
A001	TITLE SHEET	X							
A011	LIFE SAFETY CODE	X							
A012	LIFE SAFETY PLAN	X							
A020	ARCHITECTURAL SITE PLAN	X							
ARCHITECTURAL									
A211	FIRST FLOOR PLAN, MEZZANINE PLAN & DOOR INFORMATION	X							
A301	EXTERIOR ELEVATIONS	X							
A311	BUILDING SECTIONS	X							
A351	WALL SECTIONS	X							
A711	STAIR & ELEVATOR PLANS, SECTIONS & DETAILS	X							
STRUCTURAL									
F001	STRUCTURAL SPECIFICATIONS								
F002	STRUCTURAL SCHEDULES								
F003	ANCHOR BOLT PLAN								
F101	3D VIEWS								
F201	FOUNDATION PLAN								
F301	FOUNDATION DETAILS								
F302	FOUNDATION DETAILS								
F303	FOUNDATION DETAILS								
S001	STRUCTURAL SPECIFICATIONS								
S101	3D VIEWS								
S201	FRAMING PLAN								
S301	COLUMN LINE ELEVATIONS								
S401	BRACING DETAILS								
S501	FRAMING DETAILS								
S502	GIRT FRAMING DETAILS								

PROJECT LOCATION MAP

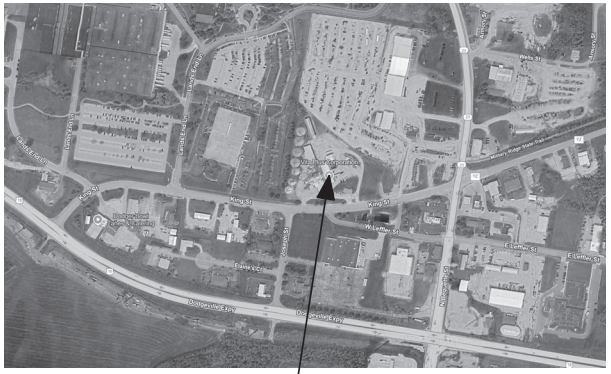

PROJECT LOCATION

Vita Plus Corporation, 208 King St, Dodgeville, WI 53533

DESIGN TEAM

ARCHITECTURAL

McMAHON
1445 McMAHON DRIVE
NEENAH, WI 54956
(920) 751-4200
PROJECT MANAGER: MICHAEL MCMHAON
E-MAIL: MMcmahon@mcmgrp.com

STRUCTURAL

McMAHON
1445 McMAHON DRIVE
NEENAH, WI 54956
(920) 751-4200
PROJECT MANAGER: PAUL BENEDICT
E-MAIL: PBenedict@mcmgrp.com

CIVIL

McMAHON
1445 McMAHON DRIVE
NEENAH, WI 54956
(920) 751-4200
PROJECT MANAGER: ------
E-MAIL: ------

PRELIMINARY NOT FOR CONSTRUCTION

IMPORTANT NOTICE: THE DRAWINGS AND THE SPECIFICATIONS TOGETHER REPRESENT THE CONSTRUCTION DOCUMENTS, AND AS SUCH, MUST BE USED TOGETHER AS THE BASIS OF DESIGN. THE CONTRACTOR IS SPECIFICALLY INSTRUCTED NOT TO LIMIT THEIR UNDERSTANDING OF THE SCOPE OF THIS PROJECT BASED UPON THE SPECIFICATIONS INDEX. THE CONTRACTOR IS RESPONSIBLE TO REVIEW ALL INFORMATION IN BOTH THE DRAWINGS AND SPECIFICATIONS, AND IS THEREFORE, REQUIRED TO PROVIDE ALL DEFINED, AND REASONABLY IMPLIED, SCOPE OF WORK NO MATTER WHERE IT APPEARS IN THE CONSTRUCTION DOCUMENTS. IN ADDITION, THE CONTRACTOR IS TO REVIEW ANY FORMALLY PROVIDED MODIFICATIONS, CLARIFICATIONS, ADDENDUMS AND/OR OTHER INFORMATION AND INCORPORATE THAT INFORMATION INTO THE CONTRACTOR'S UNDERSTANDING OF THE SCOPE OF THE PROJECT.

McMAHON
ENGINEERS ARCHITECTS
McMAHON ASSOCIATES, INC.
1445 McMAHON DRIVE NEENAH, WI 54956
Mailing: P.O.BOX 1025 NEENAH, WI 54957-1025
Tel: (920) 751-4200 Fax: (920) 751-4284
www.mcmgrp.com

McMahon Associates, Inc. provides this drawing and data, regardless of form; as instruments of service. All rights, including copyrights are retained by McMahon Associates, Inc. to the fullest extent permitted by law. Its client is granted limited license to use it. Client agrees to indemnify and hold McMahon Associates, Inc. harmless for any reuse of or changes made to this drawing or data without prior written consent by McMahon Associates, Inc.

NO.	DATE	REVISION

LOADOUT STRUCTURE FOR:
VITA PLUS DODGEVILLE DODGEVILLE, WI

TITLE SHEET

DESIGNED	DRAWN
MJM	DJR

PROJECT NO. V1036-09-25-00252

DATE 06-26-25

SHEET NO. A001

7/1/2025 10:22:39 AM
C:\Users\drass\OneDrive - McMahon Associates\Documents\LOADOUT ADDITION Arch_drassGDU2Y.rvt

BUILDING CODE INFORMATION

THE DRAWINGS HAVE BEEN PREPARED IN ACCORDANCE WITH THE FOLLOWING CODES - NOTIFY THE ARCHITECT OF ANY CONFLICTS

CODES:
2018 WISCONSIN ADMINISTRATIVE CODE, SPS 361-366
2015 INTERNATIONAL BUILDING CODE
2015 INTERNATIONAL EXISTING BUILDING CODE w/ WISCONSIN AMENDMENTS
2015 INTERNATIONAL MECHANICAL CODE
WISCONSIN UNIFORM PLUMBING CODE
2015 INTERNATIONAL ELECTRICAL CODE
2015 INTERNATIONAL FIRE CODE
2015 INTERNATIONAL FUEL GAS CODE
2012 NATIONAL FIRE PROTECTION ASSOCIATION (NFPA), LIFE SAFETY CODE
2009 ICC/ANSI 117.1-2009 ACCESSIBILITY CODE

CODE DATA

PROJECT SCOPE: ADDITION OF A TRUCK LOAD-OUT BAY TO AN EXISTING SCALE PIT & TRUCK LOAD-OUT BUILDING.

FACILITY CONSIDERATIONS: IBC 414.1 THRU 414.6
- OWNER TO UTILIZE DUST COLLECTION SYSTEM AT MIXERS, MATERIAL HANDLING ELEVATORS, AND FULLY ENCLOSED CONVEYING SYSTEMS.

- OWNER TO IMPLEMENT REGULAR HOUSEKEEPING MEASURES TO CLEAN AND REMOVE DUST BUILD UP PER NFPA & OSHA STANDARDS

- COMMERCIAL VEHICLE (GRAIN SEMI'S) PARKING LIMITED TO UNLOADING OPERATIONS ONLY

BUILDING OCCUPANCIES: S-1 TRUCK BAY LOADOUT

HEIGHT LIMITATION: 55'-0" ALLOWABLE FOR TYPE IIB
70'-0" ACTUAL TO HIGH EAVE OF TOWER - PERMITTED PER IBC 503.1.1
SPECIAL INDUSTRIAL OCCUPANCIES

ALLOWABLE STORIES: IBC 504.4 - S OCCUPANCIES = (2) STORY ALLOWABLE

THE FOLLOWING LEVELS / AREAS ARE CONSIDERED EQUIPMENT PLATFORMS:
- EQUIPMENT PLATFORM ELEV. 116'-0"

EQUIPMENT PLATFORM COMPLIANCE CALCULATIONS:

EXISTING EQUIPMENT PLATFORM = 360 S.F.
NEW EQUIPMENT PLATFORM = 1,000 S.F.
TOTAL EQUIPMENT PLATFORM AREA = 1,360 S.F.

AREA OF FIRST FLOOR ROOM BELOW = 2,943 S.F.
% OF EQUIPMENT PLATFORM TO FIRST FLOOR = 46 %
% OF EQUIPMENT PLATFORM TO FIRST FLOOR ROOM ALLOWED 66% (IBC 505.3.1)

PER IBC 505.3 EQUIPMENT PLATFORMS ARE NOT CONSIDERED PART OF THE FLOOR BELOW, AND DO NOT CONTRIBUTE TO THE BUILDING AREA, STORIES, OR FIRE AREA.

EXISTING BUILDING AREA: 2,640 SF

ADDITION AREA: 1,243 SF

ALLOWABLE AREA: TOTAL BUILDING FOOTPRINT FIRST FLOOR = 3,883 SF

LOCATION	USE	ACTUAL SF	ALLOWABLE AREA	MOD. ALLOWABLE AREA
LOAD-OUT BAY	S-1	3,883 SF	17,500 SF	N/A

CONSTRUCTION TYPE: TYPE IIB
(PER TABLE 601 NO FIRE RESISTANT RATING FOR BUILDING ELEMENTS)

AUTOMATIC SPRINKLER PROTECTION: NON-SPRINKLERED

NUMBER OF BUILDING OCCUPANTS: 3,883 SF/ 500 = 8 OCC.
TOTAL NUMBER OF BUILDING OCCUPANTS BY CALCULATION: 8 OCC.

PLUMBING FACILITIES: 2 ACCESSIBLE UNISEX TOILET FACILITIES ARE PROVIDED WITHIN 500' OF THIS BUILDING
- SEE OVERALL FLOOR PLAN ON SHEET A012 FOR LOCATION.

REQUIRED EGRESS WIDTH: 0.2 FOR EGRESS COMPONENTS AND 0.3 FOR STAIRS

8 x .2 = 1.6" REQUIRED
102" PROVIDED

EXIT TRAVEL DISTANCE: S-1 = 200'-0"

COMMON PATH OF EGRESS TRAVEL: S-1 = 100'-0"

MEANS OF EGRESS ILLUMINATION: (1) FOOT CANDLE MIN. AT WALKING SURFACE

NOTE! THIS BUILDING IS UNHEATED & UNOCCUPIED

CODE KEY

- EMERGENCY EXIT PATH OF TRAVEL
- F.E. — WALL MOUNTED FIRE EXTINGUISHER
- 000" — EXIT DISCHARGE PROVIDED (CLEAR WIDTH IN INCHES)
- EXIT SIGN

OCCUPANCY CLASSIFICATION

- STORAGE (S-1, S-2)

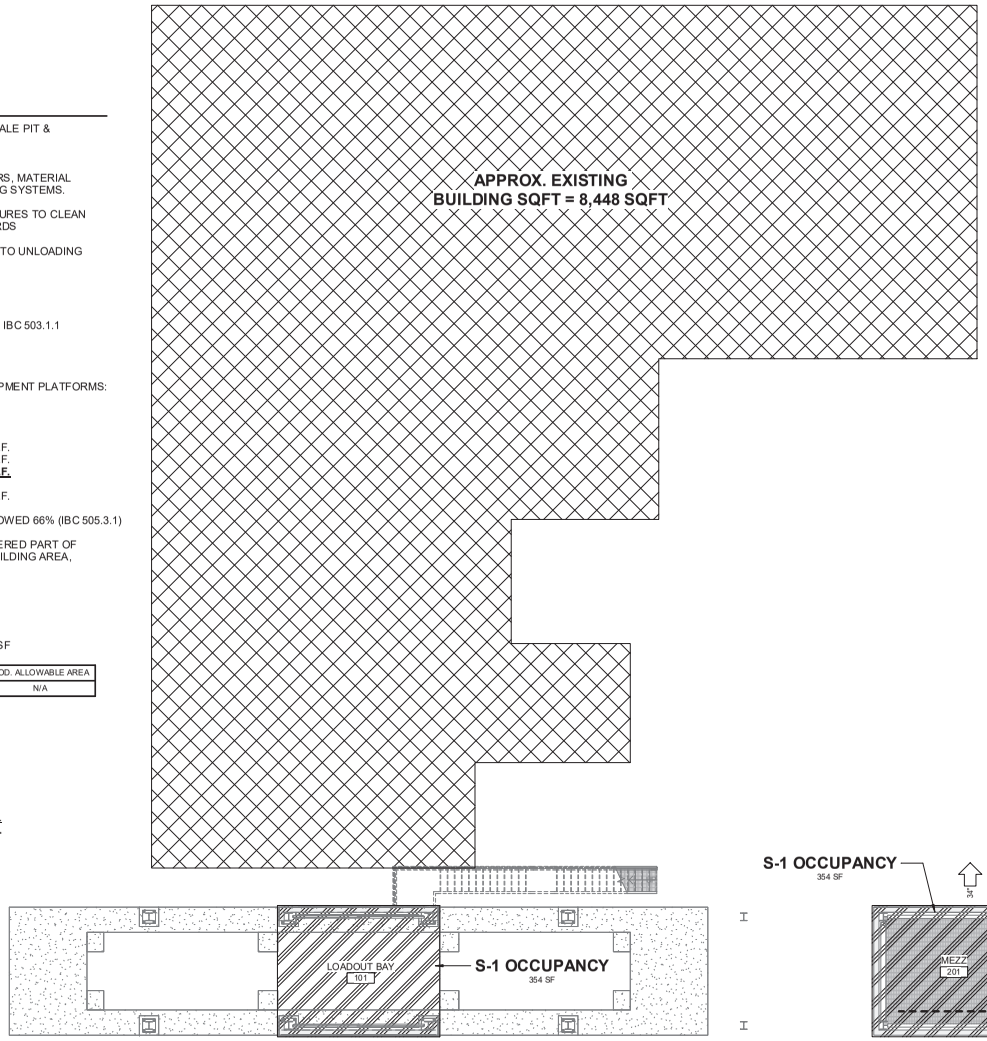

LIFE SAFETY PLAN
1/8" = 1'-0"

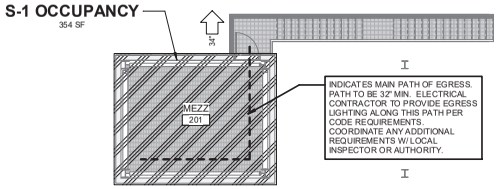

MEZZANINE LIFE SAFETY
1/8" = 1'-0"

PRELIMINARY NOT FOR CONSTRUCTION

McMAHON ENGINEERS ARCHITECTS
McMAHON ASSOCIATES, INC.
1445 McMAHON DRIVE NEENAH, WI 54956
Mailing: P.O.BOX 1025 NEENAH, WI 54957-1025
Tel: (920) 751-4200 Fax: (920) 751-4284
www.mcmengr.com

McMahon Associates, Inc. provides this drawing and data, regardless of form; as instruments of service. All rights, including copyrights are retained by McMahon Associates, Inc. The client and owner of record for whom it is prepared, to the extent permitted by law, to indemnify and hold McMahon Associates, Inc. harmless for any reuse of or changes made to the original drawing or data without prior written consent by McMahon Associates, Inc.

NO.	DATE	REVISION

LOADOUT STRUCTURE FOR:
VITA PLUS DODGEVILLE DODGEVILLE, WI

LIFE SAFETY PLAN

DESIGNED	DRAWN
MJM	DJR

PROJECT NO. V1036-09-25-00252
DATE 06-26-25
SHEET NO. A012

7/1/2025 10:22:39 AM
C:\Users\drass\OneDrive - McMahon Associates\Documents\LOADOUT ADDITION Arch_drassGDU2Y.rvt

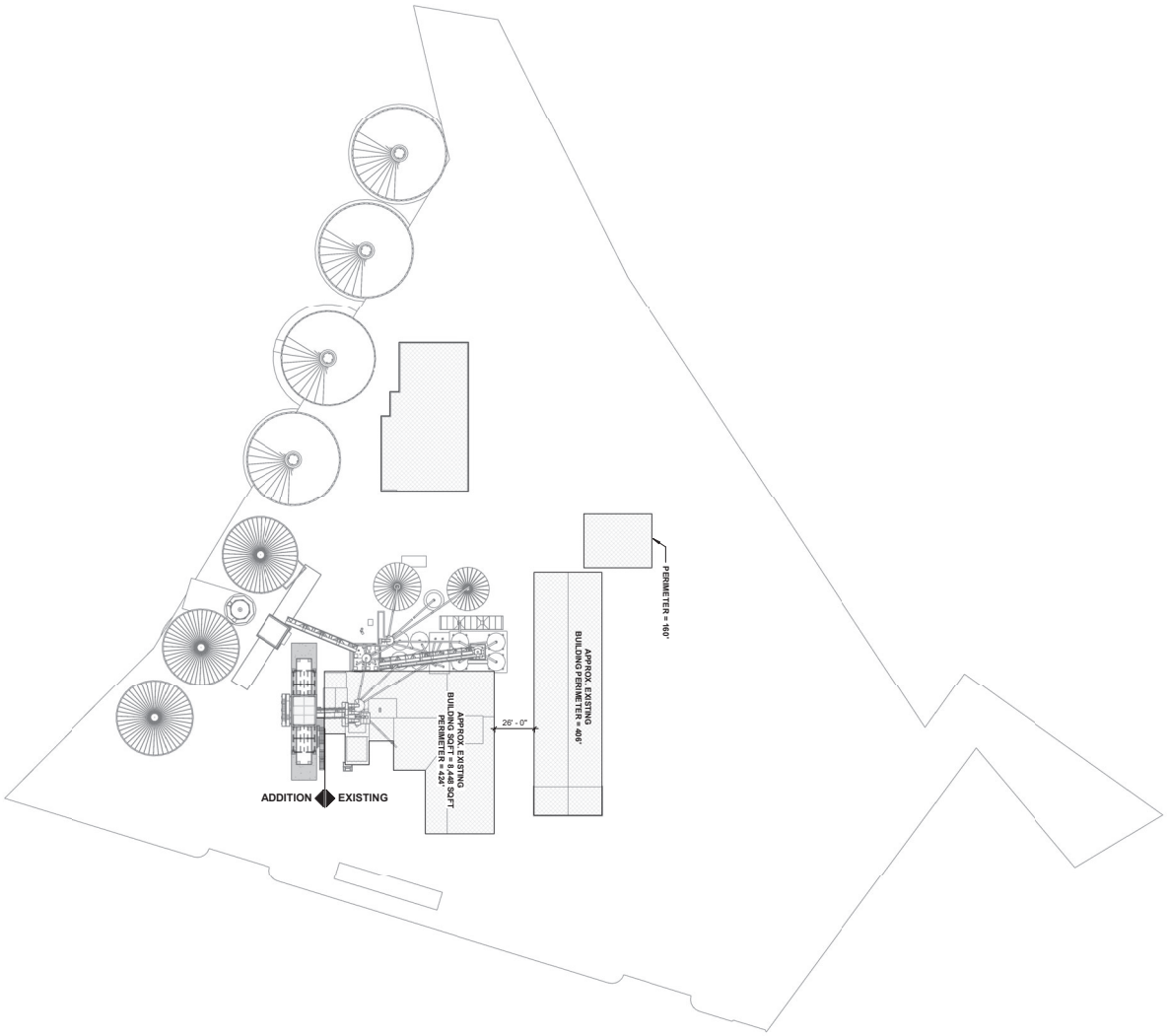

ARCHITECTURAL SITE PLAN
1" = 40'-0"

PRELIMINARY NOT FOR CONSTRUCTION

LOADOUT STRUCTURE FOR:

VITA PLUS DODGEVILLE DODGEVILLE, WI

ARCHITECTURAL SITE PLAN

NO.	DATE	REVISION

McMahon Associates, Inc. provides this drawing and data, regardless of form; as instruments of service. All rights including copyrights are retained by McMahon Associates, Inc. The client and/or recipient agrees to the fullest extent permitted by law to indemnify and hold McMahon Associates, Inc. harmless for any reuse of or changes made to the original drawing or data without prior written consent by McMahon Associates, Inc.

McMAHON
ENGINEERS ARCHITECTS
McMAHON ASSOCIATES, INC.
1445 McMAHON DRIVE NEENAH, WI 54956
Mailing: P.O.BOX 1025 NEENAH, WI 54957-1025
Tel: (920) 751-4200 Fax: (920) 751-4284
www.mcmgrp.com

DESIGNED MJM
DRAWN DJR
PROJECT NO. V100-05-25-00252
DATE 06-26-25
SHEET NO. A020

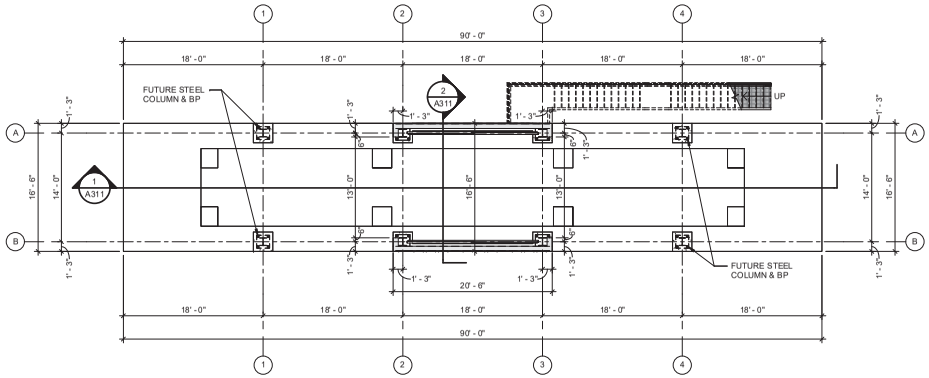

FIRST FLOOR PLAN

1/8" = 1'-0"

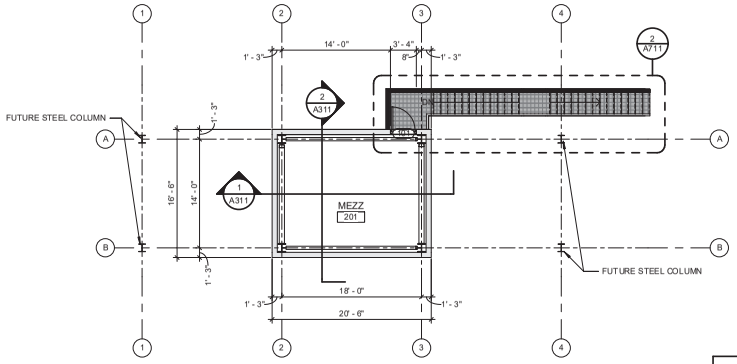

MEZZANINE PLAN

1/8" = 1'-0"

DOOR ELEVATIONS

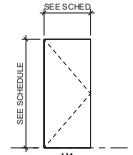

H1
HOLLOW METAL INSULATED @ EXTERIOR PAINT

FRAME ELEVATIONS

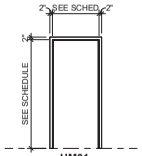

HM01
HOLLOW METAL PAINT

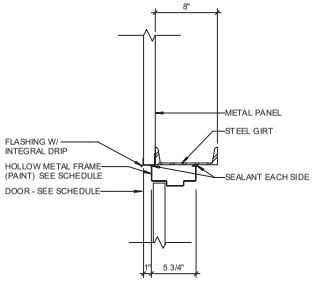

2 A211 DOOR HEAD
1 1/2" = 1'-0"

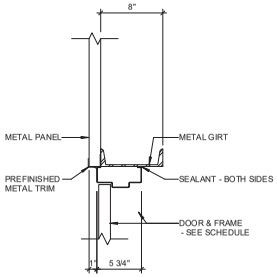

3 A211 DOOR HEAD
1 1/2" = 1'-0"

GENERAL PLAN NOTES

- DO NOT SCALE FROM DRAWINGS. BRING ANY DISCREPANCIES TO THE ARCHITECT'S ATTENTION IMMEDIATELY.
- COORDINATE LOCATIONS AND QUANTITY OF WORK WITH MECHANICAL, ELECTRICAL, AND PLUMBING CONTRACTORS.
- ALL DIMENSIONS ARE CLEAR FROM THE FACE OF FINISHED WALL/PARTITION TO FACE OF FINISHED WALL/PARTITION OR FACE OF EXISTING WALLS ACTUAL FACE.
- ALL PIPING, CONDUIT AND RELATED MECHANICAL AND ELECTRICAL ITEMS SHALL BE CONCEALED WITHIN GYPSUM BOARD FURRING AS REQUIRED IN FINISHED AREAS WHETHER SHOWN ON DRAWINGS OR NOT, UNLESS NOTED OTHERWISE.
- PROVIDE METAL PLATE BACKING AND/OR TREATED WOOD BLOCKING IN WALLS WHERE WALL-MOUNTED EQUIPMENT IS SHOWN ON PLANS OR ELEVATIONS. VERIFY HEIGHT AND LENGTH WITH ACTUAL EQUIPMENT.
- SEE SHEET A011 & A012 FOR LIFE SAFETY PLAN AND FIRE PARTITION RATINGS.
- SHADED AREA INDICATES EXISTING BUILDING.
- CONTRACTOR TO VERIFY ALL EXISTING CONDITIONS BEFORE CONSTRUCTION.

GENERAL DOOR & HARDWARE NOTES

- ALL DOOR HARDWARE SHALL BE CAPABLE OF OPERATION W/ THE USE OF ONE (1) HAND & SHALL NOT REQUIRE TIGHT PINCHING OR TWISTING OF THE WRIST TO OPERATE. THUMBTURN DEADBOLTS ARE PROHIBITED. LEVER OR PADDLE DEADBOLT RELEASES ARE ACCEPTABLE. DOOR THRESHOLD SHALL NOT EXCEED ONE-HALF INCH IN HEIGHT & SHALL HAVE 1:2 BEVEL. DOOR CLOSERS SHALL MEET THE FORCE & SWEEP PERIOD REQUIREMENTS.
- PROVIDE LEVER TYPE HANDLES ON LOCKETS
- SEE HARDWARE SETS FOR DOORS WITH ELECTRONIC, KEYPADS, ALARMS, ETC.
- HARDWARE FINISH: BHMA STAINLESS STEEL FINISH

DOOR SCHEDULE

DOOR NUMBER	LEAF QTY	OPENING SIZE WIDTH	OPENING SIZE DOOR HEIGHT	OPENING SIZE THICKNESS	DOOR TYPE	FRAME TYPE	FIRE RATING	HARDWARE SET	DETAILS (A291)	COMMENTS
101	1	3' - 0"	7' - 0"	1 3/4"						

PRELIMINARY NOT FOR CONSTRUCTION

McMAHON ENGINEERS ARCHITECTS
McMAHON ASSOCIATES, INC.
1445 MARATHON AVENUE, WAUSAU, WI 54403
Mailing: P.O.BOX 1025 NEENAH, WI 54957-1025
Tel: (920) 751-4200 Fax: (920) 751-4284
www.mcmhp.com

McMahon Associates, Inc. provides this drawing and data, regardless of form, as instruments of service. All rights, including copyrights are retained by McMahon Associates, Inc. The client is granted a non-exclusive license to use the instrument of service for the project shown thereon, provided all fees are paid to McMahon Associates, Inc. in full. The client agrees to indemnify and hold McMahon Associates, Inc. harmless for any reuse of or changes made to the instrument of service or data without prior written consent by McMahon Associates, Inc.

NO.	DATE	REVISION

LOADOUT STRUCTURE FOR:
VITA PLUS DODGEVILLE DODGEVILLE, WI
FIRST FLOOR PLAN, MEZZANINE PLAN & DOOR INFORMATION

DESIGNED	DRAWN
MJM	DJR

PROJECT NO. V1036-09-25-00252
DATE 06-26-25
SHEET NO. A211

7/1/2025 10:22:42 AM
C:\Users\drass\OneDrive - McMahon Associates\Documents\LOADOUT ADDITION Arch_drassGDU2Y.rvt

MCM_EXTERIOR MATERIALS LEGEND

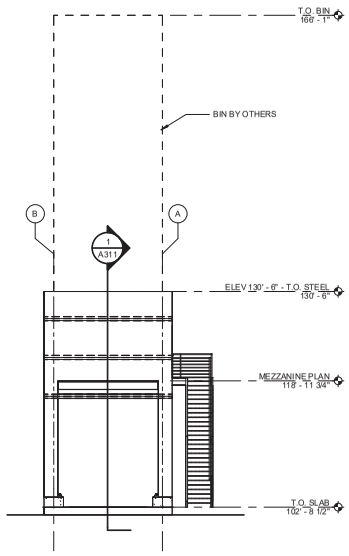

EAST EXTERIOR ELEVATION
1/8" = 1'-0"

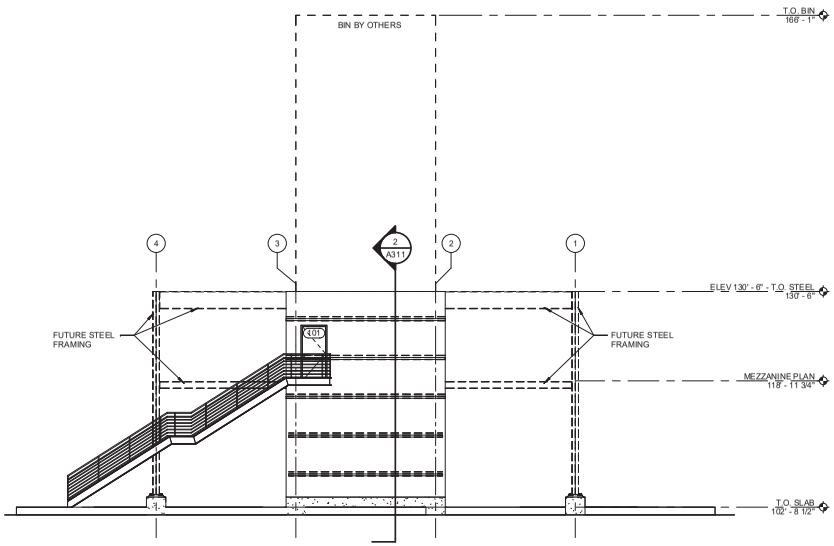

NORTH EXTERIOR ELEVATION
1/8" = 1'-0"

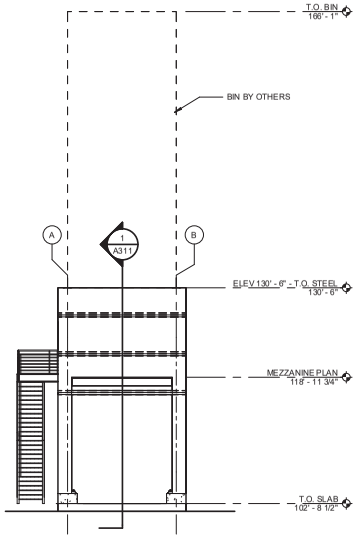

WEST EXTERIOR ELEVATION
1/8" = 1'-0"

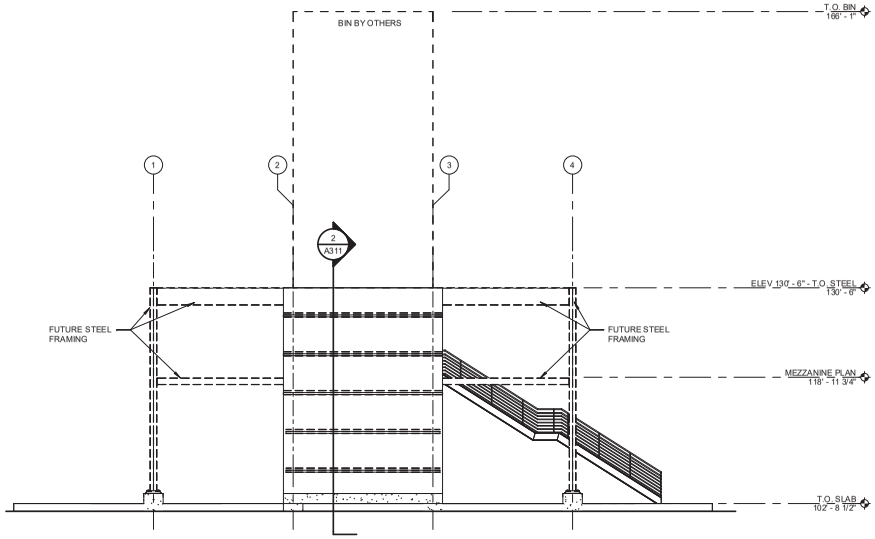

SOUTH EXTERIOR ELEVATION
1/8" = 1'-0"

PRELIMINARY NOT FOR CONSTRUCTION

LOADOUT STRUCTURE FOR:
VITA PLUS DODGEVILLE DODGEVILLE, WI
EXTERIOR ELEVATIONS

McMAHON
ENGINEERS ARCHITECTS
McMAHON ASSOCIATES, INC.
1445 MARTH DRIVE NEENAH, WI 54956
Mailing: P.O.BOX 1025 NEENAH, WI 54957-1025
Tel: (920) 751-4200 Fax: (920) 751-4284
www.mcmgrp.com

McMahon Associates, Inc. provides this drawing and data, regardless of form; as instruments of service which are copyrighted property of McMahon Associates, Inc. The client shall indemnify and hold McMahon Associates, Inc. to the fullest extent permitted by law to indemnify and shall indemnify McMahon Associates, Inc. harmless for any reuse of or changes made to the original drawing or data without prior written consent by McMahon Associates, Inc.

NO.	DATE	REVISION

DESIGNED	DRAWN
MJM	DJR

PROJECT NO.
V1036-09-25-00252

DATE
06-26-25

SHEET NO.
A301

7/1/2025 10:22:43 AM
C:\Users\drass\OneDrive - McMahon Associates\Documents\LOADOUT ADDITION Arch_drassGDU2Y.rvt

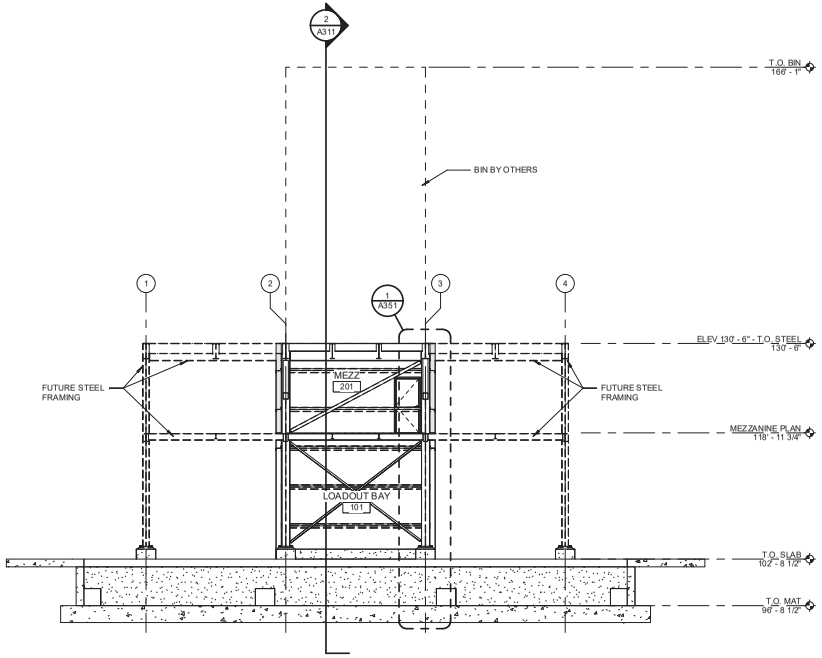

1 A311 BUILDING SECTION
1/8" = 1'-0"

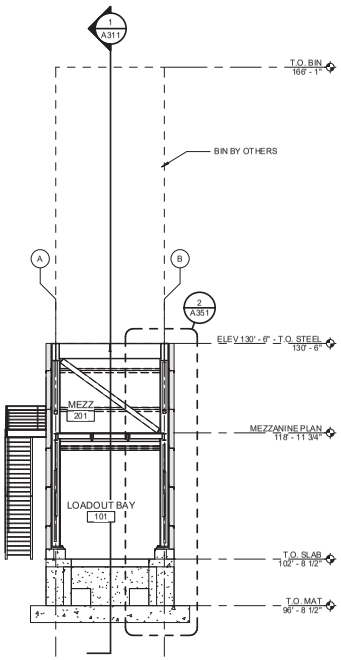

2 A311 BUILDING SECTION
1/8" = 1'-0"

PRELIMINARY NOT FOR CONSTRUCTION

LOADOUT STRUCTURE FOR:
VITA PLUS DODGEVILLE DODGEVILLE, WI
BUILDING SECTIONS

NO.	DATE	REVISION

McMahon Associates, Inc. provides this drawing and data, regardless of form, as instruments of service. All rights, including copyrights are retained by McMahon Associates, Inc. The client may use this drawing and data to the extent permitted by law to indemnify and hold harmless for any reuse of or changes made to the original drawing or data without prior written consent by McMahon Associates, Inc.

McMAHON
ENGINEERS ARCHITECTS
McMAHON ASSOCIATES, INC.
1445 MARTH STREET NEENAH, WI 54956
Mailing: P.O.BOX 1025 NEENAH, WI 54957-1025
Tel: (920) 751-4200 Fax: (920) 751-4284
www.mcmhgrp.com

DESIGNED	DRAWN
MJM	DJR

PROJECT NO.
V1036-09-25-00252

DATE
06-26-25

SHEET NO.
A311

7/1/2025 10:22:43 AM
C:\Users\drass\OneDrive - McMahon Associates\Documents\LOADOUT ADDITION Arch_drassGDU2Y.rvt

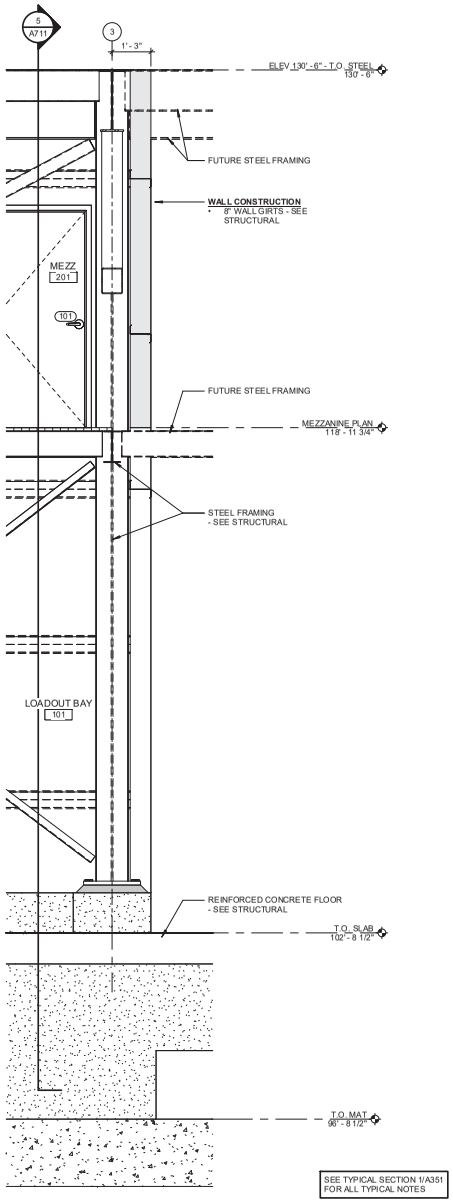

1 A351 WALL SECTION
1/2" = 1'-0"

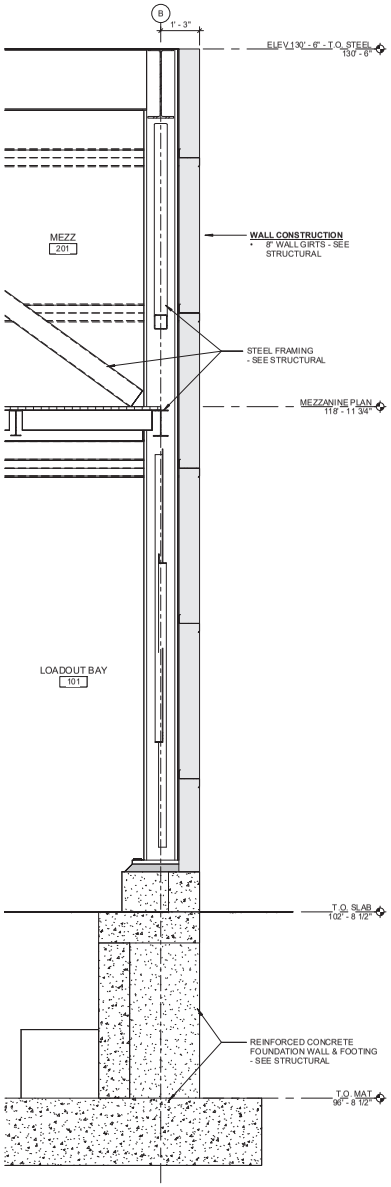

2 A351 WALL SECTION
1/2" = 1'-0"

PRELIMINARY NOT FOR CONSTRUCTION

LOADOUT STRUCTURE FOR:
VITA PLUS DODGEVILLE DODGEVILLE, WI
WALL SECTIONS

NO.	DATE	REVISION

McMahon Associates, Inc. provides this drawing and data, regardless of form, as instruments of service. All rights, including copyrights are retained by McMahon Associates, Inc. The client may utilize the drawing and data for the extent permitted by law to indemnify and hold McMahon Associates, Inc. harmless for any reuse of or changes made to the original drawing or data without prior written consent by McMahon Associates, Inc.

McMAHON
ENGINEERS ARCHITECTS
McMAHON ASSOCIATES, INC.
1445 MAM ORE ROAD NEENAH, WI 54956
Mailing: P.O.BOX 1025 NEENAH, WI 54957-1025
Tel: (920) 751-4200 Fax: (920) 751-4284
www.mcmengr.com

DESIGNED	DRAWN
MJM	DJR

PROJECT NO.
V1036-09-25-00252

DATE
06-26-25

SHEET NO.
A351

7/1/2025 10:22:44 AM
C:\Users\drass\OneDrive - McMahon Associates\Documents\LOADOUT ADDITION Arch_drassGDU2Y.rvt

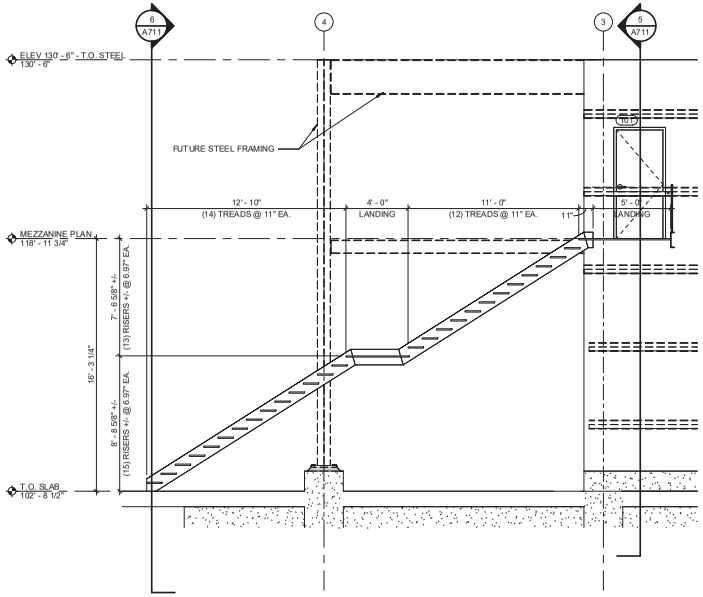

4 A711 STAIR SECTION
1/4" = 1'-0"

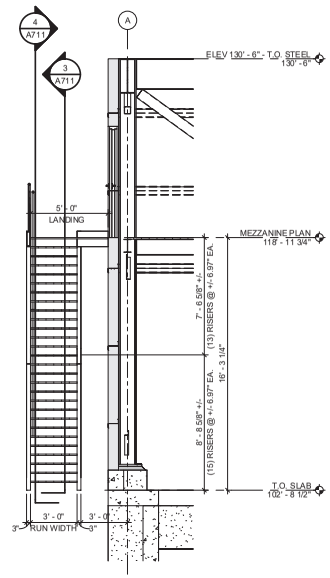

5 A711 STAIR SECTION
1/4" = 1'-0"

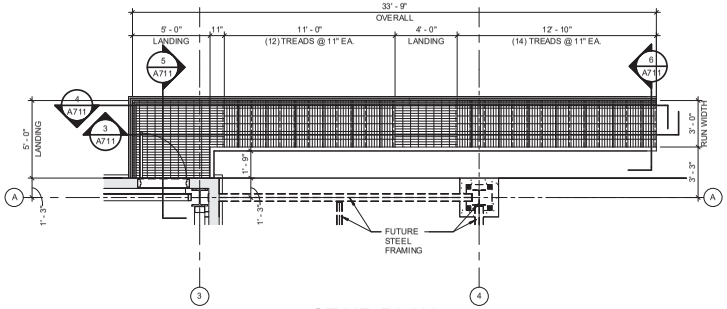

2 A711 STAIR PLAN
1/4" = 1'-0"

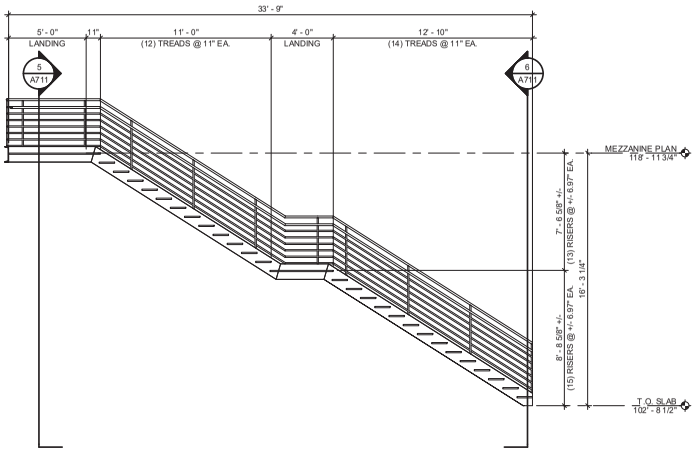

3 A711 STAIR SECTION
1/4" = 1'-0"

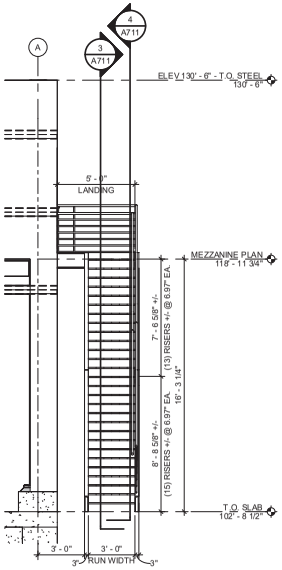

6 A711 STAIR SECTION
1/4" = 1'-0"

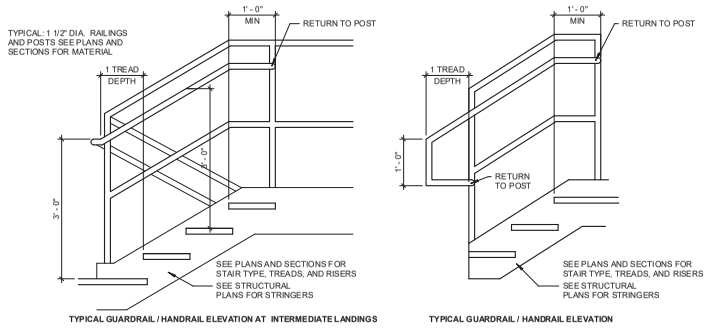

1 A711 TYPICAL RAILING ELEVATIONS
3/4" = 1'-0"

PRELIMINARY NOT FOR CONSTRUCTION

LOADOUT STRUCTURE FOR:

VITA PLUS DODGEVILLE DODGEVILLE, WI

STAIR & ELEVATOR PLANS, SECTIONS & DETAILS

McMAHON
ENGINEERS ARCHITECTS
McMAHON ASSOCIATES, INC.
1445 MARTH STREET NEENAH, WI 54956
Mailing: P.O. BOX 1025 NEENAH, WI 54957-1025
Tel: (920) 751-4200 Fax: (920) 751-4284
www.mcmgrp.com

McMahon Associates, Inc. provides this drawing and data, regardless of form; as instruments of service. Rights including copyrights are retained by McMahon Associates, Inc. To the fullest extent permitted by law, to indemnify and hold McMahon Associates, Inc. harmless for any reuse of or changes made to this instrument of service or data without prior written consent by McMahon Associates, Inc.

NO.	DATE	REVISION

DESIGNED	DRAWN
-	DJR

PROJECT NO.
V1036-09-25-00252

DATE
06-26-25

SHEET NO.
A711

7/1/2025 10:22:45 AM
C:\Users\drass\OneDrive - McMahon Associates\Documents\LOADOUT ADDITION Arch_drass\GDU2Y.rvt

5/30/2025 10:50:45 AM

STRUCTURAL SPECIFICATIONS

DESIGN CODE:

1. COMPLY WITH THE FOLLOWING CODES:
   ASCE 7-10
   IBC 2015
   WISCONSIN BUILDING CODE, LATEST EDITION

DESIGN LOADS:

1. DEAD LOAD:
   MEZZANINE - 25 PSF
   BIN - 83k

2. LIVE LOAD:
   MEZZANINE - 100 PSF
   BIN - 413k (45 PCF MATERIAL)

3. WIND:
   DESIGN WIND SPEED - 115 MPH
   IMPORTANCE FACTOR (I) - 1.00
   WIND EXPOSURE - C

4. SEISMIC:
   MAPPED SPECTRAL RESPONSE:
   S_S - 0.087
   S_1 - 0.046
   IMPORTANCE FACTOR (I) - 1.00
   SITE CLASS - D
   SPECTRAL RESPONSE COEFFICIENTS:
   S_{DS} - 0.093
   S_{D1} - 0.074
   SEISMIC DESIGN CATEGORY - B
   SEISMIC FORCE RESISTING SYSTEM - BRACED FRAMES
   DESIGN BASE SHEAR - 12k
   SEISMIC RESPONSE COEFFICIENT (Cs) - 0.031
   RESPONSE MODIFICATION FACTOR (R) - 3.0
   ANALYSIS PROCEDURE - EQUIVALENT LATERAL FORCE

GENERAL:

1. VERIFY ALL DIMENSIONS, ELEVATIONS, SECTIONS AND DETAILS PRIOR TO STARTING WORK. NOTIFY ENGINEER OF ANY DISCREPANCIES OR INCONSISTENCIES.
2. CONTRACTOR SHALL COORDINATE LOCATIONS OF ALL ARCHITECTURAL AND MECHANICAL ATTACHMENTS TO STRUCTURAL FRAMING.
3. AN ELECTRICAL GROUNDING PLAN AND SYSTEM SHALL BE DESIGNED AND DEVELOPED BY A LICENSED PROFESSIONAL ENGINEER FOR THE STEEL STRUCTURE.
4. PROVIDE ALL NECESSARY TEMPORARY BRACING, SHORING, GUYING, OR OTHER MEANS TO AVOID EXCESSIVE STRESSES AND TO HOLD STRUCTURAL ELEMENTS IN PLACE DURING CONSTRUCTION.
5. SUBMIT SHOP DRAWINGS FOR ALL PRE-FABRICATED ITEMS SUCH AS REINFORCING STEEL AND ACCESSORIES, STRUCTURAL STEEL, AND CONCRETE MIX DESIGNS. CONTRACTOR SHALL REVIEW SHOP DRAWINGS BEFORE SUBMITTING TO ENGINEER. FABRICATE ITEMS AFTER REVIEW BY ENGINEER.
6. JOBSITE SAFETY IS THE CONTRACTOR'S RESPONSIBILITY.
7. CONTRACTOR SHALL CONFORM WITH ALL OSHA REGULATIONS.
8. THE ENGINEER IS NOT RESPONSIBLE FOR THE MEANS AND METHODS OF CONSTRUCTION OR THE SAFETY OF THE JOB SITE. THESE RESPONSIBILITIES ARE INTENDED TO REMAIN SOLELY THOSE OF THE CONTRACTOR.
9. ALL MATERIAL INSTALLATIONS SHALL BE INSTALLED PER THE MANUFACTURER'S RECOMMENDATIONS.
10. WHEN REFERENCED IN THE PLANS AND DETAILS, THE FOLLOWING POST-INSTALLED ANCHORS SHALL BE PERMISSIBLE. CONTRACTOR SHALL SUBMIT SUBSTITUTION REQUEST FOR ANY ALTERNATE POST-INSTALLED ANCHORS.
    A. ADHESIVE/EPOXY ANCHORS
       1. HILTI: HY 200, HY 150 MAX
       2. POWERS: AC100+ GOLD
    B. EXPANSION ANCHORS
       1. HILTI: KWIK BOLT TZ
       2. POWERS: POWER-STUD+ SD2

STRUCTURAL STEEL:

1. ALL DETAILING, FABRICATION AND ERECTION SHALL CONFORM TO ANSI/AISC 360 AND AISC 303.
2. STRUCTURAL STEEL SHALL MEET THE FOLLOWING MINIMUM YIELD STRENGTHS AND SPECIFICATIONS.

STEEL SHAPES	ASTM A992
ANGLES & RODS	ASTM A36
BARS & PLATES	ASTM A36
STRUCTURAL TUBES	ASTM A500 GRADE B
ANCHOR BOLTS	F1554 GRADE 36
STRUCTURAL BOLTS	ASTM A325 TYPE N
WELDS	E70 XX
GROUT	ASTM C1107, GRADE B, PREMIXED NON-SHRINK, NON-METALLIC CEMENTITIOUS GROUT. MINIMUM COMPRESSIVE STRENGTH 7000 PSI.

3. ALL WELDING SHALL BE PERFORMED BY A CERTIFIED WELDER IN ACCORDANCE WITH A.W.S. CODE FOR WELDING IN BUILDING CONSTRUCTION. SURFACES FOR FIELD WELDED MATERIAL SHALL BE PROPERLY PREPARED PRIOR TO BEING WELDED TO ASSURE A GOOD QUALITY WELD. REMOVE PAINT, GREASE, DIRT, ETC.
4. ALL WELDING OF STAINLESS STEEL MEMBERS SHALL BE BY TIG WELDING.
5. PROVIDE DOUBLE NUTS AND WASHERS FOR ALL STEEL COLUMN ANCHOR BOLTS TO ALLOW FOR ADJUSTMENT IN BASE PLATE ELEVATION.
6. SET COLUMN BASES AT CORRECT ELEVATION ON FULL BED OF NON-SHRINK GROUT.
7. THE FABRICATOR SHALL BE RESPONSIBLE FOR THE DESIGN AND ADEQUACY OF ALL CONNECTIONS THAT ARE NOT DESIGNED AND FULLY DETAILED ON THE CONTRACT DOCUMENTS. CONNECTIONS SHALL BE DESIGNED AND DETAILED IN ACCORDANCE WITH ANSI/AISC 360. BEAM CONNECTIONS SHALL BE "SIMPLE FRAMING" TYPE N (UNLESS NOTED OTHERWISE).
8. ERECTION: COMPLY WITH AISC CODE AND SPECIFICATIONS. THE ERECTOR SHALL FURNISH AND INSTALL TEMPORARY SUPPORTS TO SECURE ANY ELEMENT OR ELEMENTS OF THE STEEL FRAMING UNTIL THEY ARE MADE STABLE WITHOUT EXTERNAL SUPPORT.
9. DO NOT PRIME SURFACES THAT WILL BE FIELD WELDED.
10. PAINTING: THE FABRICATOR SHALL PREPARE STEEL SURFACES TO MEET THE REQUIREMENTS OF SSPC-SP2, SHOP PRIME STRUCTURAL STEEL MEMBERS. DO NOT PRIME SURFACES THAT WILL BE FIELD WELDED. OWNER SHALL DETERMINE FINISH COAT.

BASE PLATE SCHEDULE

MARK	TYPE	THICKNESS	PLATE DIMENSIONS L	PLATE DIMENSIONS W	PLATE DIMENSIONS E	ANCHOR BOLTS	EMBEDMENT	WASHER PLATE	END PLATE	GROUT THICKNESS
BP1	I	1 1/2"	22"	22"	2"	(4) 1 1/4" DIA.	24"	1/2"x3"x3"	1/2"x3"x3"	3"

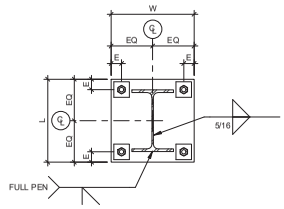

TYPE I

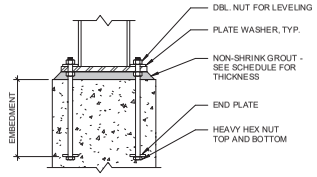

TYP. BASE PLATE SECTION

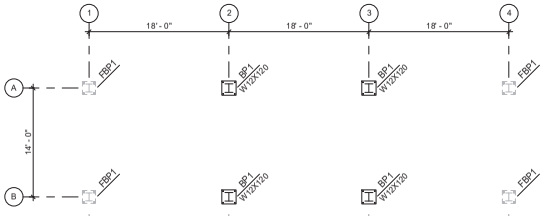

ANCHOR BOLT PLAN

1/8" = 1'-0"

NOTE: PROVIDE ANCHORS FOR FUTURE ADDITION LINES 1 AND 4

STRUCTURAL ABBREVIATIONS

ALT	ALTERNATE	JBE	JOIST BEARING ELEVATION
ARCH	ARCHITECTURAL	LBS	POUNDS
BRG	BEARING	LLH	LONG LEG HORIZONTAL
BOT	BOTTOM	LLV	LONG LEG VERTICAL
CJ	CONTROL JOINT	MANUF	MANUFACTURER
CLR	CLEAR	MAX	MAXIMUM
CMU	CONCRETE MASONRY UNIT	MIN	MINIMUM
CONC	CONCRETE	PBE	PRECAST BEARING ELEVATION
CONN	CONNECTION	REINF	REINFORCEMENT
CONT	CONTINUOUS	REQD	REQUIRED
DBE	DECK BEARING ELEVATION	SCH	SCHEDULE
DBL	DOUBLE	SF	STEP FOOTING
DET	DETAIL	SJ	SAWCUT JOINT
DIA	DIAMETER	STD	STANDARD
EA	EACH	STRUCT	STRUCTURAL
ELEV	ELEVATION	TBE	TOP OF BEAM ELEVATION
EOS	EDGE OF STRUCTURE	TFE	TOP OF FOOTING ELEVATION
EX	EXISTING	TLE	TOP OF LEDGE ELEVATION
EXP	EXPANSION	TPE	TOP OF PIER ELEVATION
FND	FOUNDATION	TSE	TOP OF SLAB ELEVATION
FT	FEET	TWE	TOP OF WALL ELEVATION
FTG	FOOTING	TYP	TYPICAL
GA	GAGE	UNO	UNLESS NOTED OTHERWISE
GALV	GALVANIZED	VERT	VERTICAL
HORIZ	HORIZONTAL	WP	WORKING POINT
IMP	INSULATED METAL PANEL	WWF	WELDED WIRE FABRIC

PROJECT:

NEW LOADOUT STEEL 1

CLIENT AND LOCATION:

1 VITA PLUS DODGEVILLE - DODGEVILLE, WI

PREPARED FOR:

VITA BUILDERS

SHEET INDEX:

SHEET NO.	SHEET DESCRIPTION
STRUCTURAL	
S001	STRUCTURAL SPECIFICATIONS
S101	3D VIEWS
S201	FRAMING PLAN
S301	COLUMN LINE ELEVATIONS
S401	BRACING DETAILS
S501	FRAMING DETAILS

1 CLIENT NAME UPDATE 1

McMAHON
ENGINEERS ARCHITECTS
McMAHON ASSOCIATES, INC.
1445 McMAHON DRIVE NEENAH, WI 54956
Mailing: P.O.BOX 1025 NEENAH, WI 54957-1025
Tel: (920) 751-4200 Fax: (920) 751-4284
www.mcmgrp.com

PROJECT NO. V1036-09-25-00252
DATE 4-24-25
SHEET NO. S001

C:\Users\aklamer\OneDrive - McMahon Associates\Documents\LOADOUT ADDITION STEEL_AKlamer.rvt

ISSUED FOR CONSTRUCTION

NO.	DATE	REVISION
1		CLIENT NAME UPDATE

McMAHON
ENGINEERS \ ARCHITECTS
McMAHON ASSOCIATES, INC.
1445 McMAHON DRIVE NEENAH, WI 54956
Mailing: P.O.BOX 1025 NEENAH, WI 54957-1025
Tel: (920) 751-4200 Fax: (920) 751-4264
www.mcmgrp.com

McMahon Associates, Inc. provides this drawing and data, regardless of form, as instruments of service. All rights including copyrights are retained by McMahon Associates, Inc. The client and/or recipient agrees to the fullest extent permitted by law to indemnify and hold McMahon Associates, Inc. harmless for any reuse of or changes made to the original drawing or data without prior written consent by McMahon Associates, Inc.

LOADOUT STRUCTURE
VITA PLUS DODGEVILLE
DODGEVILLE, WI
3D VIEWS

DESIGNED	DRAWN
PB	RLN
PROJECT NO.	
V19049-25-0032	
DATE	
4-24-25	
SHEET NO.	
S101	

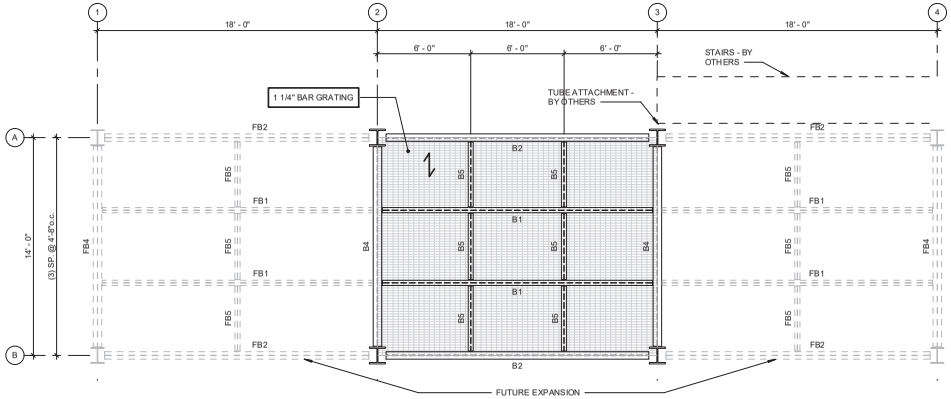

FRAMING PLAN ELEV. 118'-10 1/2"

1/4" = 1'-0"

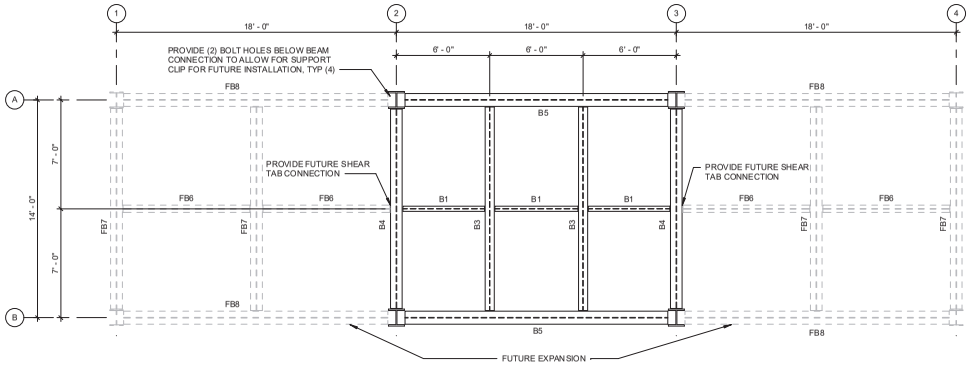

FRAMING PLAN ELEV. 130'-6"

1/4" = 1'-0"

FRAMING MEMBER SCHEDULE - ELEV. - 118'-10 1/2"

MARK	SIZE
B1	W10X15
B2	W10X22
B4	W12X26
B5	W8X10 (TSE-1")

FRAMING MEMBER SCHEDULE - ELEV. - 130'-6"

MARK	SIZE
B1	W12X19
B3	W24X55 (DBL ANG)
B4	W24X68
B5	W27X84
FB6	W16X31
FB7	W24X76 (DBL ANG)
FB8	W27X84

FRAMING NOTES

1. BEAM TO COLUMN CONNECTION - SEE DETAIL 1/S501.
2. BEAM TO BEAM CONNECTION - SEE DETAIL 2/S501.
3. (DBL ANG) INDICATES DOUBLE ANGLE BEAM CONNECTION - SEE DETAIL 3/S501.

ISSUED FOR CONSTRUCTION

McMAHON
ENGINEERS ARCHITECTS
McMAHON ASSOCIATES, INC.
1445 McMAHON DRIVE NEENAH, WI 54956
Mailing Address: P.O. BOX 1025 NEENAH, WI 54957-1025
Tel: (920) 751-4200 Fax: (920) 751-4284
www.mcmgrp.com

McMahon Associates, Inc. provides this drawing and data, regardless of form, as instruments of service. All rights including copyrights are retained by McMahon Associates, Inc. The client and/or recipient agrees to the fullest extent permitted by law to indemnify and hold McMahon Associates, Inc. harmless for any reuse of or changes made to the original drawing or data without prior written consent by McMahon Associates, Inc.

NO.	DATE	REVISIONS
1		CLIENT NAME UPDATE

LOADOUT STRUCTURE
VITA PLUS DODGEVILLE
DODGEVILLE, WI
FRAMING PLAN

DESIGNED	DRAWN
PEB	RLN

PROJECT NO. V103609-25-00252
DATE 4-24-25
SHEET NO. S201

5/30/2025 10:50:45 AM
C:\Users\klarner\OneDrive - McMahon Associates\Documents\LOADOUT ADDITION STEEL_AKlarner.rvt

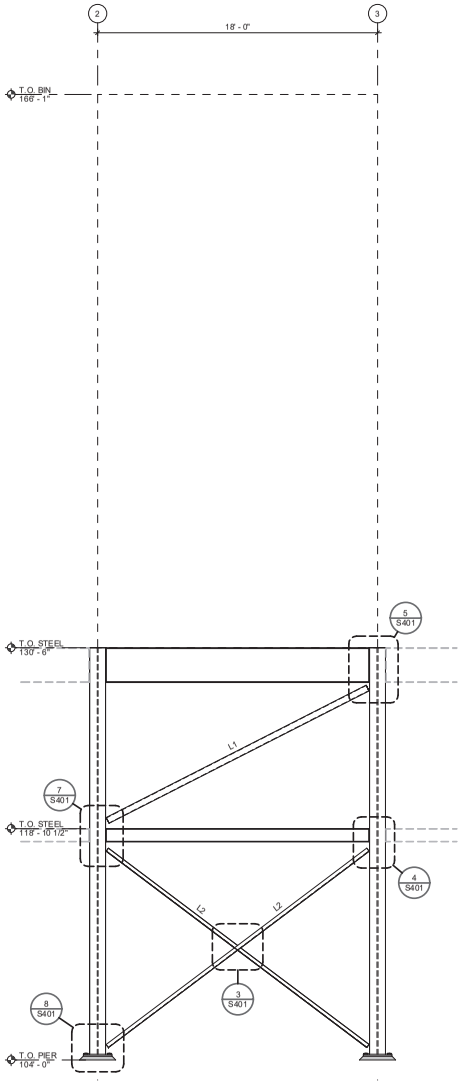

COLUMN LINE A

1/4" = 1'-0"

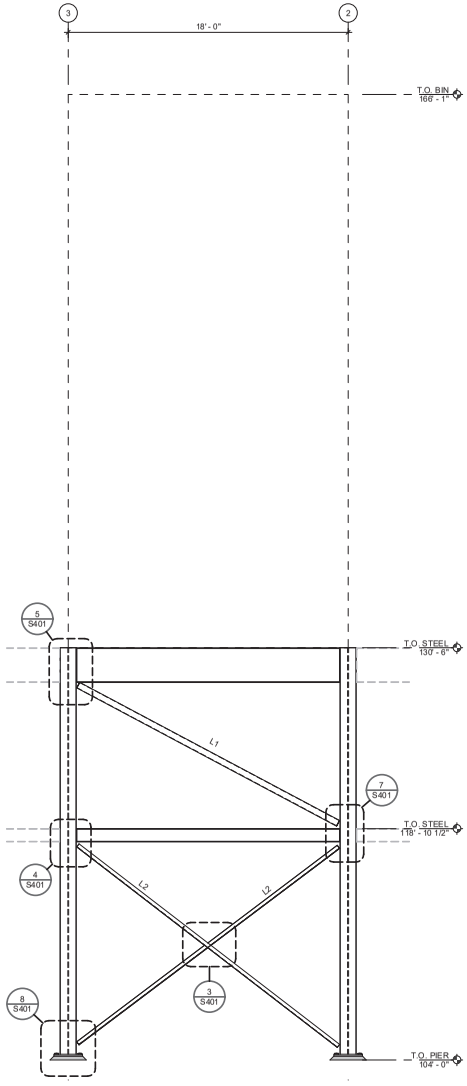

COLUMN LINE B

1/4" = 1'-0"

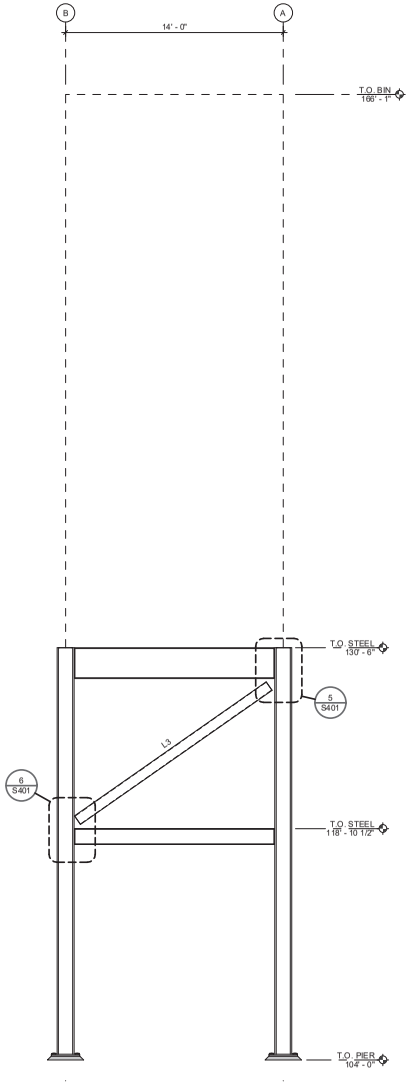

COLUMN LINE 2 & 3

1/4" = 1'-0"

BRACING MEMBER SCHEDULE

MARK	SIZE	KNIFE PLATES - TUBE BRACES			ANGLE BRACE	ANGLE COLUMN CONNECTIONS			MINIMUM GUSSET	WELD C	WELD D	MEMBER FORCE
		SIZE	BOLTS	WELD A		BOLTS	SIZE	WELD B				
L1	HSS5X5X1/4	3/8"x6"	(4) 3/4" DIA. - (2) ROWS	1/4"x3"	-	(2) 3/4" DIA.	(2) L3 1/2x3 1/2x5/16	1/4"	3/8"	1/4"x8"	-	21k
L2	L3X3X1/4	-	-	-	(2) 3/4" DIA. BOLTS	(2) 3/4" DIA.	(2) L3 1/2x3 1/2x5/16	1/4"	3/8"	1/4"x8"	1/4"x12"	29k
L3	HSS8X8X1/4	5/8"x10"	(9) 3/4" DIA. - (3) ROWS	1/4"x7"	-	(4) 3/4" DIA.	(2) L3 1/2x3 1/2x5/16	1/4"	1/2"	1/4"x16"	-	155k

NOTES:

1. MEMBER FORCES ARE FACTORED IN ACCORDANCE w/ AISC LRFD SPECIFICATIONS.
2. BOLTS FOR ANGLE AND GUSSET ARE MINIMUM.
3. ALL PLATE THICKNESSES ARE MINIMUM.

ISSUED FOR CONSTRUCTION

McMAHON
ENGINEERS ARCHITECTS
McMAHON ASSOCIATES, INC.
1445 McMAHON DRIVE NEENAH, WI 54956
Mailing Address: P.O. BOX 1025 NEENAH, WI 54957-1025
Tel: (920) 751-4200 Fax: (920) 751-4284
www.mcmgrp.com

McMahon Associates, Inc. provides this drawing and data, regardless of form, as instruments of service. All rights including copyrights are retained by McMahon Associates, Inc. The client and/or recipient agrees to the fullest extent permitted by law to indemnify and hold McMahon Associates, Inc. harmless for any reuse of or changes made to the original drawing or data without prior written consent by McMahon Associates, Inc.

NO.	DATE	REVISIONS
1		CLIENT NAME UPDATE

LOADOUT STRUCTURE
VITA PLUS DODGEVILLE
DODGEVILLE, WI
COLUMN LINE ELEVATIONS

DESIGNED	DRAWN
PEB	RLN

PROJECT NO. V103609-25-00252
DATE 4-24-25
SHEET NO. S301

5/30/2025 10:50:45 AM
C:\Users\alarner\OneDrive - McMahon Associates\Documents\LOADOUT ADDITION STEEL_AKlarner.rvt

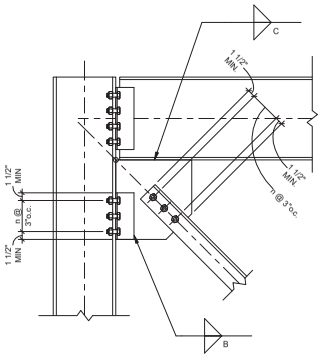

1 S401 TYP. ANGLE BRACING DIMENSIONS
1" = 1'-0"

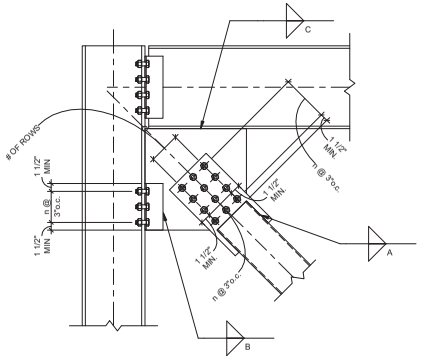

2 S401 TYP. TUBE BRACING DIMENSIONS
1" = 1'-0"

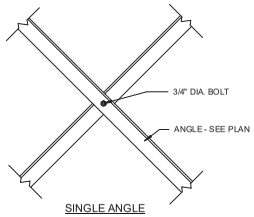

3 S401 BRACING SPLICE
3/4" = 1'-0"

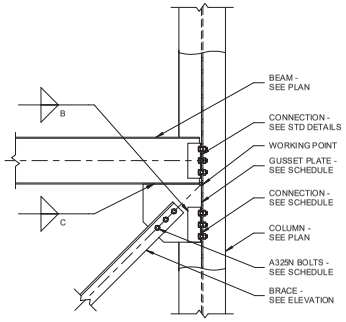

4 S401 ANGLE BRACING CONNECTION
3/4" = 1'-0"

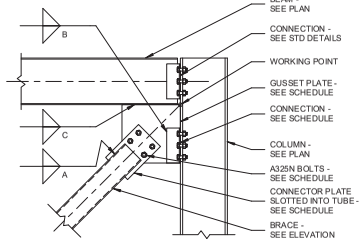

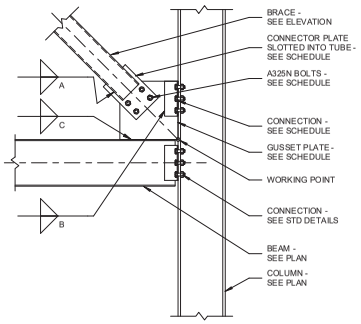

6 S401 TUBE BRACING CONNECTION
3/4" = 1'-0"

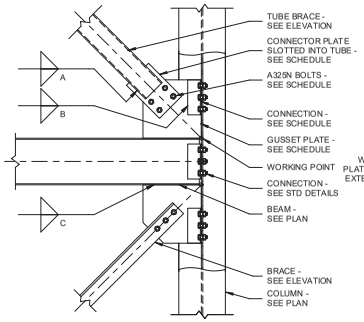

7 S401 BRACING CONNECTION
3/4" = 1'-0"

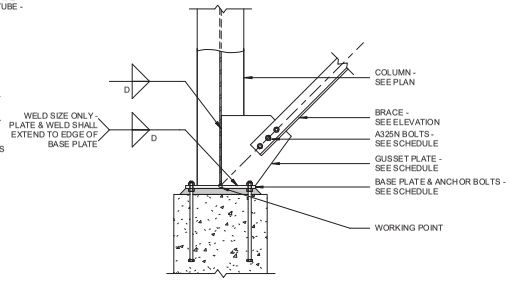

8 S401 ANGLE BRACE TO COLUMN BASE
3/4" = 1'-0"

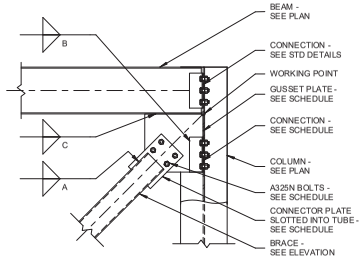

5 S401 TUBE BRACING CONNECTION
3/4" = 1'-0"

ISSUED FOR CONSTRUCTION

McMAHON
ENGINEERS ARCHITECTS
McMAHON ASSOCIATES, INC.
1445 McMAHON DRIVE NEENAH, WI 54956
Mailing Address: P.O. BOX 1025 NEENAH, WI 54957-1025
Tel: (920) 751-4200 Fax: (920) 751-4284
www.mcmgrp.com

McMahon Associates, Inc. provides this drawing and data, regardless of form, as instruments of service. All rights including copyrights are retained by McMahon Associates, Inc. The client and/or recipient agrees to the fullest extent permitted by law to indemnify and hold McMahon Associates, Inc. harmless for any reuse of or changes made to the original drawing or data without prior written consent by McMahon Associates, Inc.

NO.	DATE	REVISIONS
1		CLIENT NAME UPDATE

LOADOUT STRUCTURE
VITA PLUS DODGEVILLE
DODGEVILLE, WI
BRACING DETAILS

DESIGNED	DRAWN
PEB	RLN

PROJECT NO.
V103609-25-00252

DATE
4-24-25

SHEET NO.
S401

5/30/2025 10:50:45 AM
C:\Users\klarner\OneDrive - McMahon Associates\Documents\LOADOUT ADDITION STEEL_AKlarner.rvt

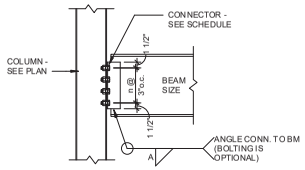

NOTES:
1. ALL BOLTS SHALL BE A325 N IN BEARING TYPE CONNECTION.
2. USE STANDARD ROUND HOLES.
3. COPE UPPER & LOWER FLANGE AS REQUIRED.
4. PROVIDE ERECTION SEAT IF REQ'D FOR BEAM TO COLUMN WEB CONNECTION. REMOVE ERECTION SEAT AFTER INSTALLATION OF BEAM.

CONNECTION SCHEDULE			
BEAM SIZE	BOLTS	CONNECTOR	WELD 'A'
W8, W10	(2) 3/4" DIA.	(2)L3 1/2x3 1/2x1/4	3/16
W12, W14	(3) 3/4" DIA.	(2)L3 1/2x3 1/2x1/4	3/16
W16, W18	(4) 3/4" DIA.	(2)L3 1/2x3 1/2x1/4	3/16
W21	(5) 3/4" DIA.	(2)L3 1/2x3 1/2x1/4	3/16
W24	(6) 3/4" DIA.	(2)L3 1/2x3 1/2x5/16	1/4
W27	(7) 3/4" DIA.	(2)L3 1/2x3 1/2x5/16	1/4
W30	(8) 3/4" DIA.	(2)L3 1/2x3 1/2x5/16	1/4
W33	(9) 3/4" DIA.	(2)L3 1/2x3 1/2x5/16	1/4
W36	(10) 7/8" DIA.	(2)L3 1/2x3 1/2x3/8	5/16
W40	(11) 7/8" DIA.	(2)L3 1/2x3 1/2x3/8	5/16

1 BEAM TO COLUMN CONNECTION
S501 3/4" = 1'-0"

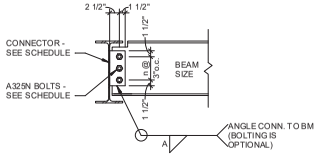

NOTES:
1. ALL BOLTS SHALL BE A325 N IN BEARING TYPE CONNECTION.
2. USE STANDARD ROUND HOLES.
3. COPE UPPER & LOWER FLANGE AS REQUIRED.

CONNECTION SCHEDULE			
BEAM SIZE	BOLTS	PLATE THICKNESS	WELD 'A'
W8, W10	(2) 3/4" DIA.	5/16	1/4
W12, W14	(3) 3/4" DIA.	5/16	1/4
W16	(4) 3/4" DIA.	5/16	1/4
W18	(5) 3/4" DIA.	3/8	5/16
W21	(6) 3/4" DIA.	3/8	5/16
W24	(7) 3/4" DIA.	3/8	5/16
W27	(8) 3/4" DIA.	3/8	5/16
W30	(9) 3/4" DIA.	3/8	5/16

2 BEAM TO BEAM CONNECTION
S501 3/4" = 1'-0"

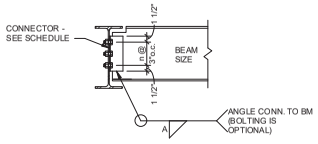

NOTES:
1. ALL BOLTS SHALL BE A325 N IN BEARING TYPE CONNECTION.
2. USE STANDARD ROUND HOLES.
3. COPE UPPER & LOWER FLANGE AS REQUIRED.
4. PROVIDE ERECTION SEAT IF REQ'D FOR BEAM TO COLUMN WEB CONNECTION. REMOVE ERECTION SEAT AFTER INSTALLATION OF BEAM.

CONNECTION SCHEDULE			
BEAM SIZE	BOLTS	CONNECTOR	WELD 'A'
W8, W 10	(2) 3/4" DIA.	(2)L3 1/2x3 1/2x1/4	3/16
W12, W14	(3) 3/4" DIA.	(2)L3 1/2x3 1/2x1/4	3/16
W16, W18	(4) 3/4" DIA.	(2)L3 1/2x3 1/2x1/4	3/16
W21	(5) 3/4" DIA.	(2)L3 1/2x3 1/2x1/4	3/16
W24	(6) 3/4" DIA.	(2)L3 1/2x3 1/2x5/16	1/4
W27	(7) 3/4" DIA.	(2)L3 1/2x3 1/2x5/16	1/4
W30	(8) 3/4" DIA.	(2)L3 1/2x3 1/2x5/16	1/4
W33	(9) 3/4" DIA.	(2)L3 1/2x3 1/2x5/16	1/4
W36	(10) 7/8" DIA.	(2)L3 1/2x3 1/2x3/8	5/16
W40	(11) 7/8" DIA.	(2)L3 1/2x3 1/2x3/8	5/16

3 DOUBLE ANGLE BEAM CONNECTION
S501 3/4" = 1'-0"

ISSUED FOR CONSTRUCTION

McMAHON
ENGINEERS ARCHITECTS
McMAHON ASSOCIATES, INC.
1445 McMAHON DRIVE NEENAH, WI 54956
Mailing Address: PO BOX 1025 NEENAH, WI 54957-1025
Tel: (920) 751-4200 Fax: (920) 751-4284
www.mcmgrp.com

McMahon Associates, Inc. provides this drawing and data, regardless of form, as instruments of service. All rights including copyrights are retained by McMahon Associates, Inc. The client and/or recipient agrees to affix the following statement on all contracts, specifications, and drawings or data without prior written consent by McMahon Associates, Inc.:
Associates, Inc. harmless for any reuse of or changes made to the original drawing or data without prior written consent by McMahon Associates, Inc.

NO.	DATE	REVISIONS
1		CLIENT NAME UPDATE

LOADOUT STRUCTURE
VITA PLUS DODGEVILLE
DODGEVILLE, WI
FRAMING DETAILS

DESIGNED	DRAWN
PEB	RLN

PROJECT NO.
V103609-25-00252
DATE
4-24-25
SHEET NO.
S501

5/30/2025 10:50:45 AM
C:\Users\klarner\OneDrive - McMahon Associates\Documents\LOADOUT ADDITION STEEL_AKlarner.rvt

STRUCTURAL SPECIFICATIONS

DESIGN CODE:

1. COMPLY WITH THE FOLLOWING CODES:
   ASCE 7-10
   IBC 2015
   WISCONSIN BUILDING CODE, LATEST EDITION

DESIGN LOADS:

1. DEAD LOAD:
   MEZZANINE - 25 PSF
   BIN - 67k
2. LIVE LOAD:
   MEZZANINE - 100 PSF
   BIN - 333k (45 PCF MATERIAL)
3. WIND:
   DESIGN WIND SPEED - 115 MPH
   IMPORTANCE FACTOR (I) - 1.00
   WIND EXPOSURE - C
4. SEISMIC:
   MAPPED SPECTRAL RESPONSE:
   S_S - 0.087
   S_1 - 0.046
   IMPORTANCE FACTOR (I) - 1.00
   SITE CLASS - D
   SPECTRAL RESPONSE COEFFICIENTS:
   S_{DS} - 0.093
   S_{D1} - 0.074
   SEISMIC DESIGN CATEGORY - B
   SEISMIC FORCE RESISTING SYSTEM - BRACED FRAMES
   DESIGN BASE SHEAR - 10k
   SEISMIC RESPONSE COEFFICIENT (Cs) - 0.031
   RESPONSE MODIFICATION FACTOR (R) - 3.0
   ANALYSIS PROCEDURE - EQUIVALENT LATERAL FORCE

GENERAL:

1. VERIFY ALL DIMENSIONS, ELEVATIONS, SECTIONS AND DETAILS BETWEEN THE ARCHITECTURAL AND STRUCTURAL PLANS PRIOR TO STARTING WORK. NOTIFY ENGINEER OF ANY DISCREPANCIES OR INCONSISTENCIES.
2. VERIFY SIZE, LOCATION, AND NUMBER OF WALL, FLOOR, AND ROOF OPENINGS WITH THE STRUCTURAL, ARCHITECTURAL, MECHANICAL, AND ELECTRICAL PLANS. PROVIDE ALL OPENINGS AND SUPPORT FRAMING.
3. CONTRACTOR SHALL COORDINATE LOCATIONS OF ALL ARCHITECTURAL AND MECHANICAL ATTACHMENTS TO STRUCTURAL FRAMING.
4. AN ELECTRICAL GROUNDING PLAN AND SYSTEM SHALL BE DESIGNED AND DEVELOPED BY A LICENSED PROFESSIONAL ENGINEER FOR THE STEEL STRUCTURE.
5. PROVIDE ALL NECESSARY TEMPORARY BRACING, SHORING, GUYING, OR OTHER MEANS TO AVOID EXCESSIVE STRESSES AND TO HOLD STRUCTURAL ELEMENTS IN PLACE DURING CONSTRUCTION.
6. SUBMIT SHOP DRAWINGS FOR ALL PRE-FABRICATED ITEMS SUCH AS REINFORCING STEEL AND ACCESSORIES, STRUCTURAL AND CONCRETE MIX DESIGNS. CONTRACTOR SHALL REVIEW SHOP DRAWINGS BEFORE SUBMITTING TO ENGINEER. FABRICATE ITEMS AFTER REVIEW BY ENGINEER.
7. JOBSITE SAFETY IS THE CONTRACTOR'S RESPONSIBILITY.
8. CONTRACTOR SHALL CONFORM WITH ALL OSHA REGULATIONS.
9. THE ENGINEER/ARCHITECT IS NOT RESPONSIBLE FOR THE MEANS AND METHODS OF CONSTRUCTION OR THE SAFETY OF THE JOB SITE. THESE RESPONSIBILITIES ARE INTENDED TO REMAIN SOLELY THOSE OF THE CONTRACTOR.
10. ALL MATERIAL INSTALLATIONS SHALL BE INSTALLED PER THE MANUFACTURER'S RECOMMENDATIONS.
11. THE STRUCTURAL PLANS AND DETAILS HAVE NOT BEEN INVESTIGATED FOR POTENTIAL ERECTION AND CONSTRUCTION LOADS. CONTRACTOR SHALL BE RESPONSIBLE FOR ANY INVESTIGATION OF THE STRUCTURAL FRAMING FOR ERECTION OR CONSTRUCTION LOADS.
12. WHEN REFERENCED IN THE PLANS AND DETAILS, THE FOLLOWING POST-INSTALLED ANCHORS SHALL BE PERMISSIBLE. CONTRACTOR SHALL SUBMIT SUBSTITUTION REQUEST FOR ANY ALTERNATE POST-INSTALLED ANCHORS.
    A. ADHESIVE/EPOXY ANCHORS
       1. HILTI: HY 200, HY 150 MAX
       2. POWERS: AC100+ GOLD
    B. EXPANSION ANCHORS
       1. HILTI: KWIK BOLT TZ
       2. POWERS: POWER-STUD+ SD2

MATERIAL STRENGTHS:

STEEL SHAPES - ASTM A992
STRUCTURAL TUBES - A500 GRADE B
ANGLES & RODS - ASTM A36 GRADE 50
BARS & PLATES - ASTM A36
ANCHOR BOLTS - ASTM F1554 GRADE 36
STRUCTURAL BOLTS - ASTM A325 TYPE N
WELDS - E70 XX
GROUT - ASTM C1107, GRADE B, PREMIXED NON-SHRINK, NON-METALLIC CEMENTITIOUS GROUT. MINIMUM COMPRESSIVE STRENGTH 7,000 PSI
CONCRETE - ASSUMED MIN. STRENGTH OF 4,000 PSI

FOUNDATION:

1. ALLOWABLE SOIL BEARING - 5,000 PSF. SEE GEOTECHNICAL REPORT PREPARED BY SOILS & ENGINEERING SERVICES, INC. DATED JULY 1, 2015.
2. CONTRACTOR SHALL OBTAIN A GEOTECHNICAL ENGINEER TO INSPECT SUB-GRADE AFTER EXCAVATION TO VERIFY SOIL BEARING PRESSURES. AT THE DIRECTION OF THE GEOTECHNICAL ENGINEER, REMOVE UNSATISFACTORY SOILS TO AN ELEVATION WHERE SATISFACTORY SOIL IS ENCOUNTERED. REPLACE UNSATISFACTORY SOIL w/ EITHER COMPACTED STRUCTURAL FILL OR CONCRETE SLURRY - SEE GEOTECHNICAL REPORT.
3. PLACE FOUNDATION CONCRETE ON CLEAN FIRM BEARING SOILS MATERIAL.
4. CONTRACTOR TO CONSULT WITH LOCAL AUTHORITIES PRIOR TO EXCAVATION TO LOCATE UNDERGROUND GAS, SEWER, WATER, AND ELECTRICAL OBSTACLES.
5. MINIMUM DEPTH TO ALL EXTERIOR FOOTINGS SHALL BE 4'-0" BELOW GRADE.
6. CONTRACTOR TO CONSULT WITH LOCAL AUTHORITIES PRIOR TO EXCAVATION TO LOCATE UNDERGROUND GAS, SEWER, WATER, AND ELECTRICAL OBSTACLES.
7. STRUCTURAL FILL
   LOCATION: ALL BACKFILL WITHIN 5'-0" OF THE BUILDING LINES, BELOW STRUCTURAL FOUNDATIONS, AND BEHIND RETAINING WALLS WITHIN A WEDGE EXTENDING UPWARDS 45 DEGREES FROM THE BACK FACE OF RETAINING WALL FOOTINGS.
   TYPE: PREDOMINANTLY WELL GRADED GRANULAR MATERIAL. UNLESS MORE STRINGENT REQUIREMENTS ARE SPECIFIED BY THE PROJECT GEOTECHNICAL ENGINEER, PROVIDE MATERIAL WITH 100% PASSING THE 3" SIEVE, 70-100% PASSING THE #4 SIEVE AND LESS THAN 15% PASSING THE #200 SIEVE.
   COMPACTION: UNLESS MORE STRINGENT REQUIREMENTS ARE SPECIFIED BY THE PROJECT GEOTECHNICAL ENGINEER, COMPACT TO 95% MODIFIED PROCTOR (ASTM: D1557) PLACED IN LIFTS NOT TO EXCEED 8".
8. IN AREAS OF COMPACTED FILL WITHIN THE BUILDING LINES, BACKFILLING AGAINST BOTH SIDES OF WALLS SHALL BE DONE AT THE SAME RATE TO PREVENT STRESS AND OVERTURNING OF FOUNDATION WALLS.
9. ALL EARTHWORK WITH ON-SITE MATERIALS SHOULD BE PERFORMED WHEN TEMPERATURES ARE ABOVE FREEZING. FROZEN SOIL SHOULD NOT BE USED BENEATH STRUCTURES. ALL FOUNDATION EXCAVATION MUST BE INSULATED AGAINST FREEZING UNTIL CONSTRUCTION OF FOUNDATION IS COMPLETE.
10. SOILS THAT BECOME RUTTED OR DISTURBED BY CONSTRUCTION VEHICLES WILL BE UNSUITABLE FOR SUPPORTING FOUNDATION AND CONCRETE SLABS. THE SOILS SHALL BE REMOVED AND REPLACED WITH COMPACTED STRUCTURAL FILL.
11. NO SOIL DISTURBANCES, HOLES, OR TRENCHES ARE PERMITTED BELOW FOOTINGS, WITHIN A WEDGE EXTENDING DOWNWARDS 45 DEGREES FROM THE BOTTOM EDGE OF THE FOOTING. FOOTINGS SHALL BE STEPPED DOWN AS REQUIRED TO AVOID SUCH DISTURBANCES.

SLAB ON GRADE:

1. CONTRACTOR SHALL OBTAIN A GEOTECHNICAL ENGINEER TO INSPECT SLAB SUB-GRADE AFTER EXCAVATION TO VERIFY EXISTING SOIL CONDITIONS. AT THE DIRECTION OF THE GEOTECHNICAL ENGINEER, REMOVE UNSATISFACTORY SOILS TO AN ELEVATION WHERE SATISFACTORY SOIL IS ENCOUNTERED. REPLACE UNSATISFACTORY SOIL w/ COMPACTED STRUCTURAL FILL.
2. PROVIDE 12" MINIMUM OF SLAB BASE MATERIAL BELOW ALL CAST-IN-PLACE CONCRETE ON GRADE.
3. SLAB BASE MATERIAL
   LOCATION: BELOW SLAB ON GRADE.
   TYPE: GRANULAR FILL. UNLESS MORE STRINGENT REQUIREMENTS ARE SPECIFIED BY THE PROJECT GEOTECHNICAL ENGINEER, PROVIDE MATERIAL SUCH AS MANUFACTURED SAND OR 3/4" CRUSHED LIMESTONE BASE COURSE WITH 100% PASSING THE 1" SIEVE, 40-100% PASSING THE #4 SIEVE, 15-30% PASSING THE #40 SIEVE, AND LESS THAN 10% PASSING THE #200 SIEVE.
   COMPACTION: UNLESS MORE STRINGENT REQUIREMENTS ARE SPECIFIED BY THE PROJECT GEOTECHNICAL ENGINEER, COMPACT TO 95% MODIFIED PROCTOR (ASTM: D1557) PLACED IN LIFTS NOT TO EXCEED 8".
4. PROVIDE CONSTRUCTION JOINTS (C.J.) AND SAWCUT JOINTS (S.J.) AS NECESSARY TO ADEQUATELY CONTROL SHRINKAGE CRACKING. SAWED JOINTS IN SLAB SHALL BE MADE WITHIN 18 HOURS OF FINAL SLAB FINISHING, OR EARLIER IF CONCRETE STRENGTH PERMITS.

CAST-IN-PLACE CONCRETE:

1. CONCRETE AND ITS PLACEMENT SHALL BE IN ACCORDANCE WITH ACI 318, ACI 301, AND THE PROJECT SPECIFICATIONS, EXCEPT AS MODIFIED BELOW. PROTECT ALL CONCRETE IN ACCORDANCE WITH ACI STANDARDS FOR HOT & COLD WEATHER CONCRETING.
2. STANDARD WEIGHT CONCRETE SHALL COMPLY WITH THE FOLLOWING:
   A. MINIMUM COMPRESSIVE STRENGTH (AT 28 DAYS) - 4,000 PSI
   B. MAXIMUM WATER/CEMENT RATIO - .45 (AIR ENTRAINED)
   C. MAXIMUM AGGREGATE SIZE - 3/4"(TYPICAL)
      - 1 1/2" (FOOTINGS GREATER THAN 12" THICK)
   D. TOTAL AIR CONTENT - 6%±1 1/2% (3/4" AGGREGATE)
      - 5%±1 1/2% (1 1/2" AGGREGATE)
   E. MAX SLUMP - 3" (TYPICAL)
      - 4" (FLOOR SLAB)
   F. REINFORCING BARS: PROVIDE DEFORMED BARS COMPLYING WITH ASTM A615 GRADE 60.
   G. NO ADMIXTURES WITHOUT REVIEW FROM ENGINEER. ADMIXTURES CONTAINING CHLORIDES SHALL NOT BE USED.
3. ALL CONCRETE SHALL BE AIR ENTRAINED (U.N.O.). FOOTINGS BELOW THE FROST DEPTH LINE AND INTERIOR CONCRETE PROTECTED FROM FREEZING & ENVIRONMENTAL EFFECTS MAY BE NON-AIR ENTRAINED, AT CONTRACTOR'S OPTION.
4. CONCRETE COVERAGE FOR REINFORCING (U.N.O.):
   A. UNFORMED CONCRETE IN CONTACT WITH EARTH = 3"
   B. FORMED CONCRETE IN CONTACT WITH EARTH = 2"
   C. OTHER CONCRETE = 1 1/2"
5. LAP SPLICES SHALL BE THE FOLLOWING BAR DIAMETERS UNLESS NOTED OTHERWISE ON DRAWINGS. LOCATE SPLICES AT POINT OF MINIMUM STRESS. WELDED SPLICES ARE NOT PERMITTED.

REINFORCEMENT	#3 THROUGH #6	#7 THROUGH #11
TYPICAL BARS (INCLUDING FOOTINGS, SLAB-ON-GRADE, BASE MATS)	38 db	48 db
WALL REINFORCEMENT	50 db	62 db
BEAM REINFORCEMENT	57 db	72 db
HORIZONTAL SILO RINGWALL	65 db	81 db

6. COMPLY WITH ACI 301. POSITION, SUPPORT AND SECURE REINFORCEMENT AGAINST DISPLACEMENT, LOCATE AND SUPPORT WITH METAL CHAIRS, RUNNERS, BOLSTERS, SPACERS, AND HANGERS, AS REQUIRED. SET WIRE TIES SO ENDS ARE DIRECTED INTO CONCRETE, NOT TOWARD EXPOSED CONCRETE SURFACES.
7. PROVIDE BENT CORNER BARS TO MATCH AND LAP HORIZONTAL BARS AT CORNERS AND INTERSECTIONS OF WALLS AND FOOTING.
8. PROVIDE DOWELS OF SAME SIZE AND SPACING AS VERTICAL WALL OR COLUMN REINFORCING, WITH STANDARD HOOKS, AT THE FOUNDATION (U.N.O.).
9. MAXIMUM FREE DROP OF ALL CONCRETE = 2'-0".
10. CONCRETE CAN ONLY BE PLACED ON A FROST-FREE SUBGRADE
11. MECHANICALLY VIBRATE ALL CONCRETE.
12. PROVIDE A 3/4"x3/4" CHAMFER ON ALL EXPOSED CORNERS OF CONCRETE, UNLESS CONCRETE IS ADJACENT TO GRATING.
13. ALL CAST-IN-PLACE CONCRETE SHALL BE PROTECTED AGAINST RAPID DRYING AND MUST BE KEPT MOIST FOR A MINIMUM OF (7) DAYS FOR NOMINAL CONCRETE.
14. AT LEAST 24 HOURS SHALL PASS BETWEEN POURING ADJACENT CONCRETE SECTIONS BETWEEN CONSTRUCTION JOINTS.
15. CONSTRUCTION JOINTS SHALL BE PROVIDED AT A MAXIMUM OF 40'-0"o.c. (U.N.O.).
16. CONCRETE FIELD TESTS FOR SLUMP, AIR CONTENT, YIELD AND STRENGTH SHALL BE CONDUCTED BY A CERTIFIED CONCRETE TECHNICIAN IN ACCORDANCE WITH ACI 301. TESTS SHALL BE SUBMITTED TO ENGINEER FOR REVIEW.

STRUCTURAL ABBREVIATIONS

ALT	ALTERNATE	JBE	JOIST BEARING ELEVATION
ARCH	ARCHITECTURAL	LBS	POUNDS
BRG	BEARING	LLH	LONG LEG HORIZONTAL
BOT	BOTTOM	LLV	LONG LEG VERTICAL
CJ	CONTROL JOINT	MANUF	MANUFACTURER
CLR	CLEAR	MAX	MAXIMUM
CMU	CONCRETE MASONRY UNIT	MIN	MINIMUM
CONC	CONCRETE	PBE	PRECAST BEARING ELEVATION
CONN	CONNECTION	REINF	REINFORCEMENT
CONT	CONTINUOUS	REQD	REQUIRED
DBE	DECK BEARING ELEVATION	SCH	SCHEDULE
DBL	DOUBLE	SF	STEP FOOTING
DET	DETAIL	SJ	SAWCUT JOINT
DIA	DIAMETER	STD	STANDARD
EA	EACH	STRUCT	STRUCTURAL
ELEV	ELEVATION	TBE	TOP OF BEAM ELEVATION
EOS	EDGE OF STRUCTURE	TFE	TOP OF FOOTING ELEVATION
EX	EXISTING	TLE	TOP OF LEDGE ELEVATION
EXP	EXPANSION	TPE	TOP OF PIER ELEVATION
FND	FOUNDATION	TSE	TOP OF SLAB ELEVATION
FT	FEET	TWE	TOP OF WALL ELEVATION
FTG	FOOTING	TYP	TYPICAL
GA	GAGE	UNO	UNLESS NOTED OTHERWISE
GALV	GALVANIZED	VERT	VERTICAL
HORIZ	HORIZONTAL	WP	WORKING POINT
IMP	INSULATED METAL PANEL	WWF	WELDED WIRE FABRIC

PROJECT:

NEW LOADOUT FOUNDATION △

CLIENT AND LOCATION:

△ **VITA PLUS DODGEVILLE - DODGEVILLE, WI**

PREPARED FOR:

VITA BUILDERS

SHEET INDEX:

SHEET NO.	SHEET DESCRIPTION
STRUCTURAL	
F001	STRUCTURAL SPECIFICATIONS
F002	STRUCTURAL SCHEDULES
F003	ANCHOR BOLT PLAN
F101	3D VIEWS
F201	FOUNDATION PLAN
F301	FOUNDATION DETAILS
F302	FOUNDATION DETAILS
F303	FOUNDATION DETAILS

1 CLIENT NAME UPDATE

McMAHON ENGINEERS ARCHITECTS
McMAHON ASSOCIATES, INC.
1445 McMAHON DRIVE NEENAH, WI 54956
Mailing: P.O.BOX 1025 NEENAH, WI 54957-1025
Tel: (920) 751-4200 Fax: (920) 751-4284
www.mcmgrp.com

PROJECT NO. V1036-09-25-00252
DATE 4-24-25
SHEET NO. F001

5/30/2025 10:47:55 AM
C:\Users\aklamer\OneDrive - McMahon Associates\Documents\LOADOUT ADDITION FND_AKlamer.rvt

PIER SCHEDULE

MARK	WIDTH	LENGTH	REINFORCEMENT			T.O. PIER ELEV. (U.N.O.)
			VERT.	TIES	TYPE	
P30	30"	30"	(8) #8	#4 @ 12"o.c.	I	SEE PLAN

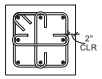

TYPE I

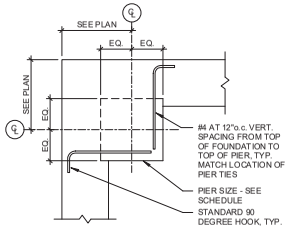

TYPICAL CORNER PIER

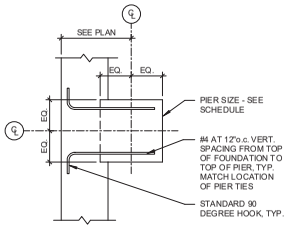

TYPICAL WALL PIER

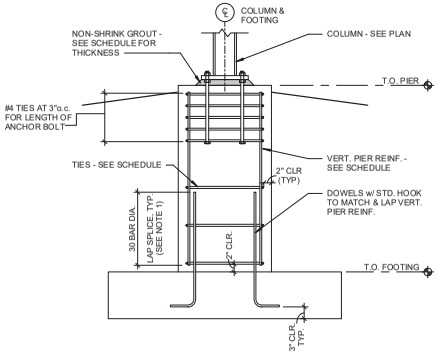

NOTES:

1. AT CONTRACTORS OPTION, ELIMINATE SPLICE AND PROVIDE CONTINUOUS VERTICALS WITH STD. HOOK AT BOTTOM TO FOOTING.

TYPICAL PIER DIAGRAM

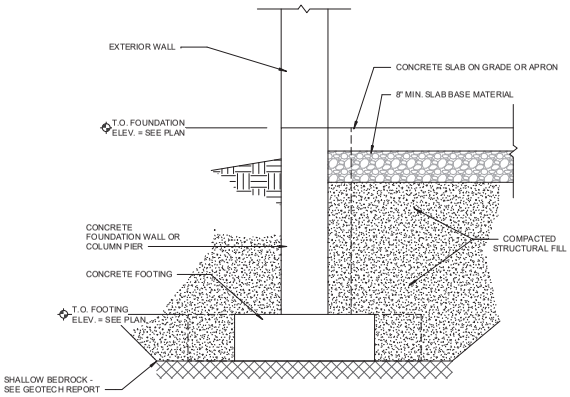

EXTERIOR FOUNDATION

NOTES:

1. SEE GEOTECHNICAL REPORT FOR DESCRIPTION OF SUBGRADE CONDITIONS, EXTENTS OF EXCAVATIONS, SITE PREPARATION, ETC.
2. CONTRACTOR SHALL OBTAIN A GEOTECHNICAL ENGINEER TO INSPECT SUB-GRADE AFTER EXCAVATION TO VERIFY SOIL BEARING PRESSURES AT THE DIRECTION OF THE GEOTECHNICAL ENGINEER. REMOVE UNSATISFACTORY SOILS TO AN ELEVATION WHERE SATISFACTORY SOIL IS ENCOUNTERED. REPLACE UNSATISFACTORY SOIL W/ EITHER COMPACTED STRUCTURAL FILL OR CONCRETE SLURRY - SEE GEOTECHNICAL REPORT.

SUBGRADE PREP

3/4" = 1'-0"

ISSUED FOR CONSTRUCTION

McMAHON
ENGINEERS ARCHITECTS
McMAHON ASSOCIATES, INC.
1445 McMAHON DRIVE NEENAH, WI 54956
Mailing: P.O. BOX 1025 NEENAH, WI 54957-1025
Tel: (920) 751-4200 Fax: (920) 751-4284
www.mcmgrp.com

McMahon Associates, Inc. provides this drawing and data, regardless of form, as instruments of service. All rights including copyrights are retained by McMahon Associates, Inc. The client and/or recipient agrees to affix the following copyright notice to the future extent possible to any reproduction or derivative thereof. Associates, Inc. harmless for any reuse of or changes made to the original drawing or data without prior written consent by McMahon Associates, Inc.

NO.	DATE	REVISIONS
1		CLIENT NAME UPDATE

LOADOUT STRUCTURE
VITA PLUS DODGEVILLE
DODGEVILLE, WI
STRUCTURAL SCHEDULES

DESIGNED	DRAWN
PEB	RLN

PROJECT NO. V103609-25-00252
DATE 4-24-25
SHEET NO. F002

5/30/2025 10:47:55 AM
C:\Users\aklarner\OneDrive - McMahon Associates\Documents\LOADOUT ADDITION FND_Aklarner.rvt

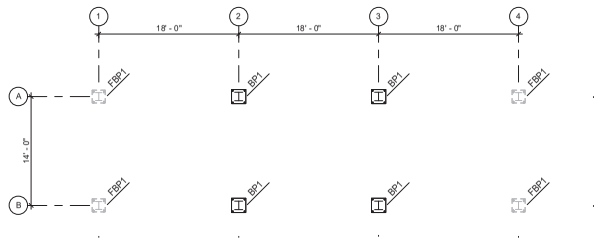

NOTE: PROVIDE ANCHORS FOR FUTURE ADDITION LINES 1 AND 4

ANCHOR BOLT PLAN

1/8" = 1'-0"

BASE PLATE SCHEDULE

MARK	TYPE	THICKNESS	PLATE DIMENSIONS L	PLATE DIMENSIONS W	PLATE DIMENSIONS E	ANCHOR BOLTS	EMBEDMENT	WASHER PLATE	END PLATE	GROUT THICKNESS
BP1	I	1 1/2"	22"	22"	2"	(4) 1 1/4" DIA.	24"	1/2"x3"x3"	1/2"x3"x3"	3"

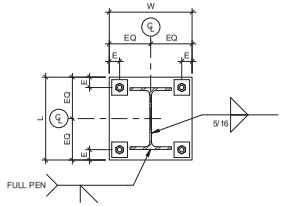

TYPE I

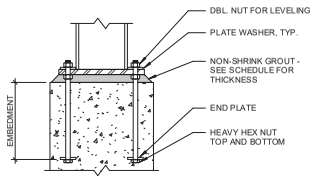

TYP. BASE PLATE SECTION

ISSUED FOR CONSTRUCTION

McMAHON
ENGINEERS ARCHITECTS
McMAHON ASSOCIATES, INC.
1445 McMAHON DRIVE NEENAH, WI 54956
Mailing Address: P.O. BOX 1025 NEENAH, WI 54957-1025
Tel: (920) 751-4200 Fax: (920) 751-4284
www.mcmgrp.com

McMahon Associates, Inc. provides this drawing and data, regardless of form, as instruments of service. All rights including copyrights are retained by McMahon Associates, Inc. The client and/or recipient agrees to affix the following statement to all drawings or data prepared or adapted from these instruments of service: Reproduced from drawings and data originally prepared by McMahon Associates, Inc. Associates, Inc. harmless for any reuse of or changes made to the original drawings or data without prior written consent by McMahon Associates, Inc.

NO.	DATE	REVISIONS
1		CLIENT NAME UPDATE

LOADOUT STRUCTURE
VITA PLUS DODGEVILLE
DODGEVILLE, WI
ANCHOR BOLT PLAN

DESIGNED	DRAWN
PEB	RLN

PROJECT NO. V103609-25-00252
DATE 4-24-25
SHEET NO. F003

5/30/2025 10:47:55 AM
C:\Users\sklarner\OneDrive - McMahon Associates\Documents\LOADOUT ADDITION FND_Sklarner.rvt

ISSUED FOR CONSTRUCTION

3D VIEW

DESIGNED	DRAWN
PB	RLN

PROJECT NO.
V19049-25-0032

DATE
4-24-25

SHEET NO.
F101

LOADOUT STRUCTURE
VITA PLUS DODGEVILLE, DODGEVILLE, WI
3D VIEWS

NO.	DATE	REVISION
1		CLIENT NAME UPDATE

McMAHON
ENGINEERS \ ARCHITECTS
McMAHON ASSOCIATES, INC.
1445 MAMMOND DRIVE NEENAH, WI 54956
Mailing: P.O.BOX 1025 NEENAH, WI 54957-1025
Tel: (920) 751-4200 Fax: (920) 751-4284
www.mcmgrp.com

McMahon Associates, Inc. provides this drawing and data, regardless of form, as instruments of service. All rights including copyrights are retained by McMahon Associates, Inc. The client and/or recipient agrees to the fullest extent permitted by law to indemnify and hold McMahon Associates, Inc. harmless for any reuse of or changes made to the original drawing or data without prior written consent by McMahon Associates, Inc.

FOUNDATION NOTES

1. SEE SHEET F002 FOR SCHEDULED INFORMATION
2. STANDARD FOUNDATION DETAILS - SHEET F301.

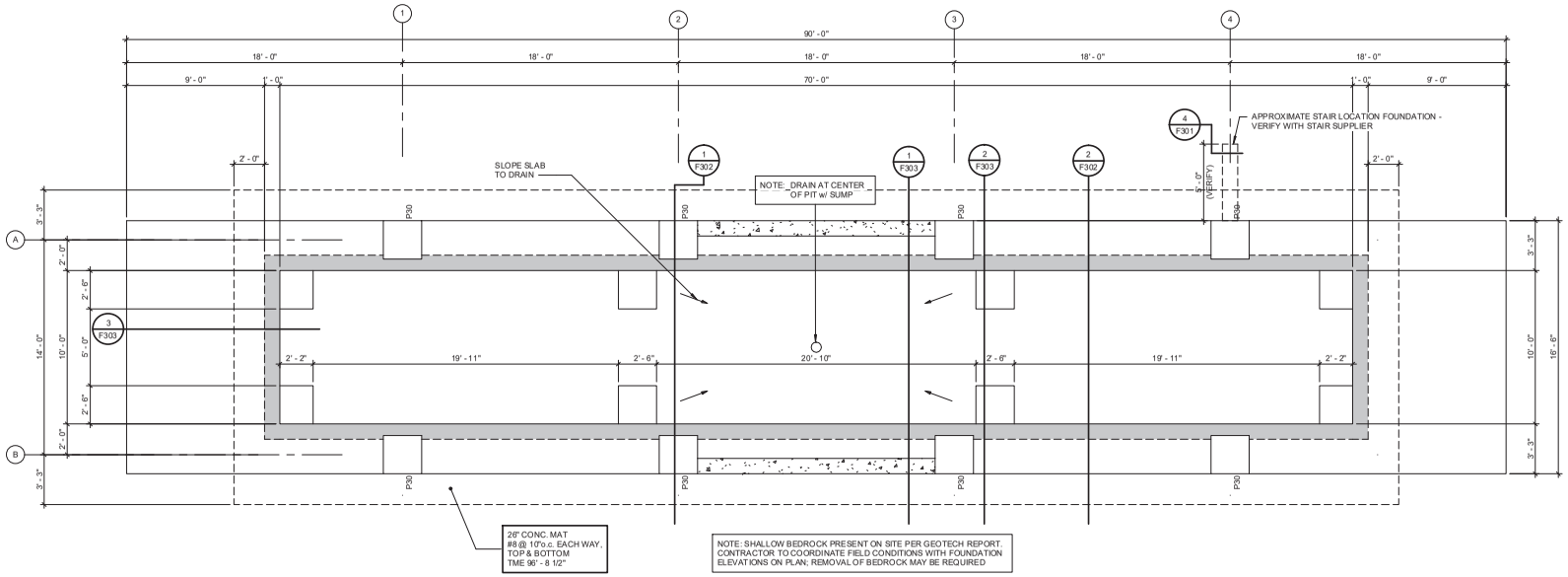

FOUNDATION PLAN

1/4" = 1'-0"

ISSUED FOR CONSTRUCTION

McMAHON ENGINEERS ARCHITECTS
McMAHON ASSOCIATES, INC.
1445 McMAHON DRIVE NEENAH, WI 54956
Mailing Address: P.O. BOX 1025 NEENAH, WI 54957-1025
Tel: (920) 751-4200 Fax: (920) 751-4284
www.mcmgrp.com

McMahon Associates, Inc. provides this drawing and data, regardless of form, as instruments of service. All rights including copyrights are retained by McMahon Associates, Inc. The client and/or recipient agrees to the fullest extent permitted by law to indemnify and hold McMahon Associates, Inc. harmless for any reuse of or changes made to the original drawing or data without prior written consent by McMahon Associates, Inc.

NO.	DATE	REVISIONS
1		CLIENT NAME UPDATE

LOADOUT STRUCTURE
VITA PLUS DODGEVILLE
DODGEVILLE, WI
FOUNDATION PLAN

DESIGNED	DRAWN
PEB	RLN

PROJECT NO. V103609-25-00252
DATE 4-24-25
SHEET NO. F201

5/30/2025 10:47:55 AM
C:\Users\aklarner\OneDrive - McMahon Associates\Documents\LOADOUT ADDITION FND_Aklarner.rvt

5/30/2025 10:47:55 AM

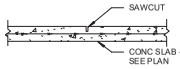

SAWCUT JOINT (S.J.)

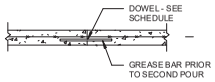

CONSTRUCTION JOINT (C.J.)

SLAB THICKNESS	DOWEL DIAMETER	MINIMUM EMBEDMENT	DOWEL LENGTH	SPACING
4" & 5"	5/8"	5"	12"	12"o.c.
6"	3/4"	6"	14"	12"o.c.
8"	7/8"	8"	18"	12"o.c.

NOTE:
CUT FRESH CONCRETE FOR AGGREGATE SEPARATION 1/4 OF SLAB DEPTH. DO NOT CUT SLAB REINFORCEMENT.

1 F301 TYP. JOINTS IN SLAB ON GRADE
1/2" = 1'-0"

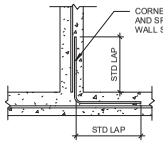

SINGLE LAYER - INTERIOR CORNER

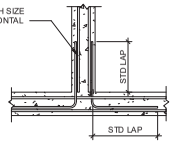

DOUBLE LAYER - INTERIOR CORNER

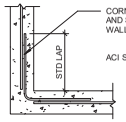

SINGLE LAYER - EXTERIOR CORNER

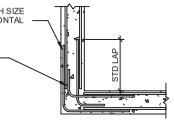

DOUBLE LAYER - EXTERIOR CORNER

NOTE:
TYPICAL REINFORCING AT CORNERS UNLESS SHOWN OTHERWISE ON STRUCTURAL DRAWINGS.

2 F301 TYP CONCRETE CORNER DETAILS
1/2" = 1'-0"

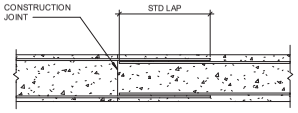

3 F301 TYP WALL OR FOOTING CONSTRUCTION JOINT
1/2" = 1'-0"

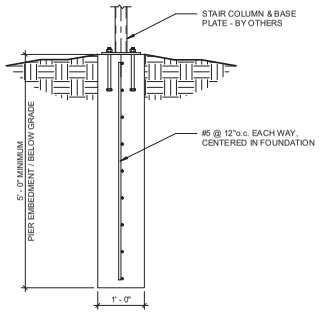

4 F301 STAIR COLUMN FOUNDATION
3/4" = 1'-0"

ISSUED FOR CONSTRUCTION

McMAHON
ENGINEERS ARCHITECTS
McMAHON ASSOCIATES, INC.
1445 McMAHON DRIVE NEENAH, WI 54956
Mailing Address: P.O. BOX 1025 NEENAH, WI 54957-1025
Tel: (920) 751-4200 Fax: (920) 751-4284
www.mcmgrp.com

McMahon Associates, Inc. to provide the drawing and data, regardless of form, as instruments of service. All rights including copyrights are retained by McMahon Associates, Inc. The client and/or recipient agrees to use the drawing and data only for the purpose and project intended by McMahon Associates, Inc. The client and/or recipient agrees to indemnify and hold McMahon Associates, Inc. harmless for any reuse of the drawing and data or any changes to the drawing and data without prior written consent by McMahon Associates, Inc.

NO.	DATE	REVISIONS
1		CLIENT NAME UPDATE

LOADOUT STRUCTURE
VITA PLUS DODGEVILLE
DODGEVILLE, WI
FOUNDATION DETAILS

DESIGNED	DRAWN
PEB	RLN

PROJECT NO.
V103609-25-00252

DATE
4-24-25

SHEET NO.
F301

C:\Users\sklarner\OneDrive - McMahon Associates\Documents\LOADOUT ADDITION FND_Sklarner.rvt

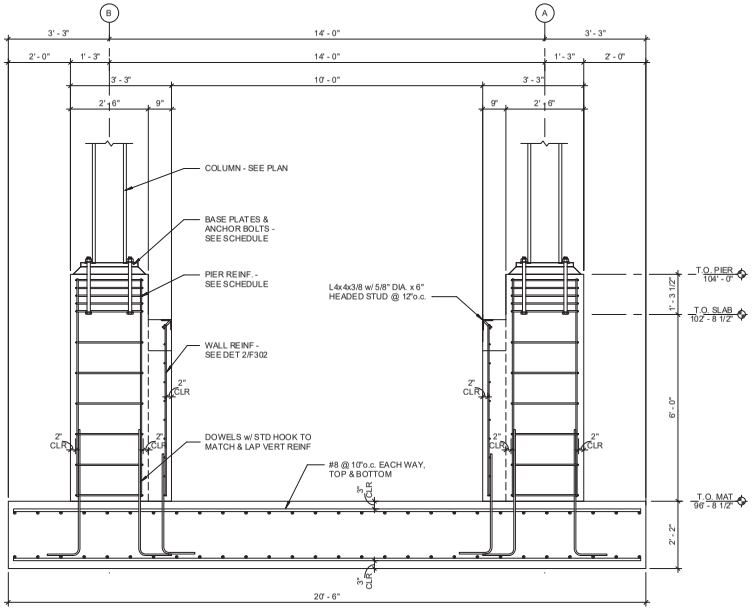

1 F302 FOUNDATION SECTION
1/2" = 1'-0"

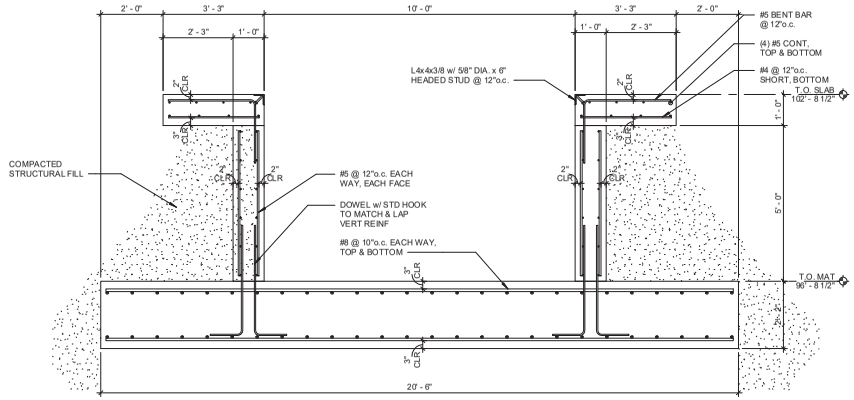

2 F302 FOUNDATION SECTION
1/2" = 1'-0"

ISSUED FOR CONSTRUCTION

McMAHON
ENGINEERS ARCHITECTS
McMAHON ASSOCIATES, INC.
1445 McMAHON DRIVE, NEENAH, WI 54956
Mailing: P.O. BOX 1025, NEENAH, WI 54957-1025
Tel: (920) 751-4200 Fax: (920) 751-4284
www.mcmgrp.com

McMahon Associates, Inc. provides this drawing and data, regardless of form, as instruments of service. All rights including copyrights are retained by McMahon Associates, Inc. The client and/or recipient agrees to the fullest extent permitted by law to indemnify and hold McMahon Associates, Inc. harmless for any reuse of or changes made to the original drawing or data without prior written consent by McMahon Associates, Inc.

NO.	DATE	REVISIONS
1		CLIENT NAME UPDATE

LOADOUT STRUCTURE
VITA PLUS DODGEVILLE
DODGEVILLE, WI
FOUNDATION DETAILS

DESIGNED	DRAWN
PEB	RLN

PROJECT NO. V103609-25-00252
DATE 4-24-25
SHEET NO. F302

5/30/2025 10:47:55 AM
C:\Users\klarner\OneDrive - McMahon Associates\Documents\LOADOUT ADDITION FND_Klarner.rvt

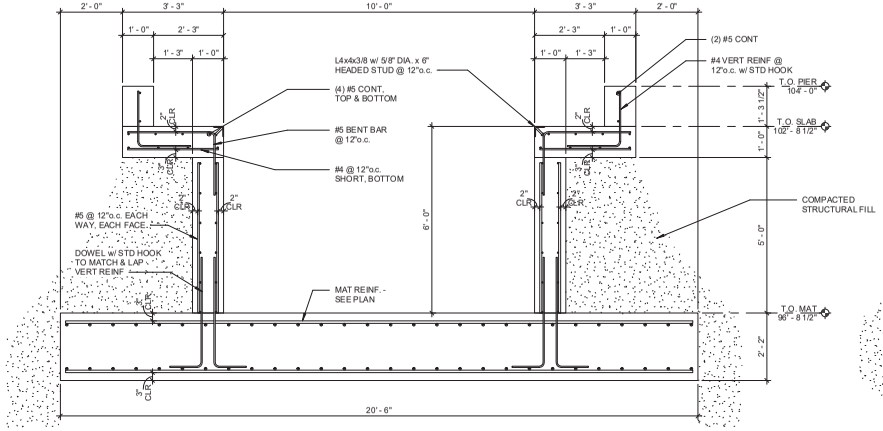

1 F303 FOUNDATION SECTION
1/2" = 1'-0"

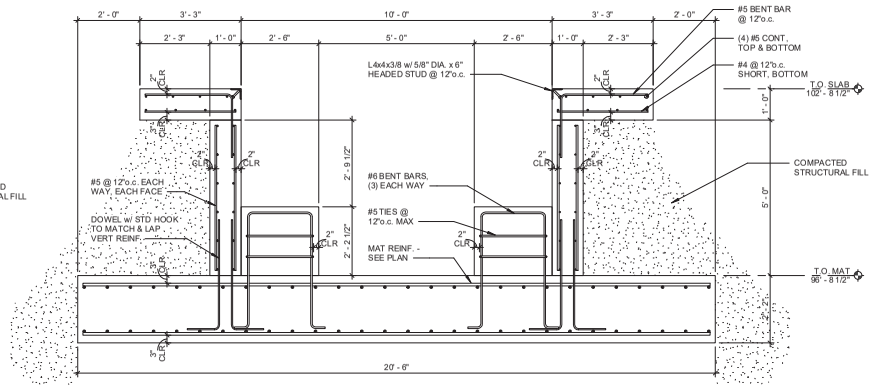

2 F303 FOUNDATION SECTION
1/2" = 1'-0"

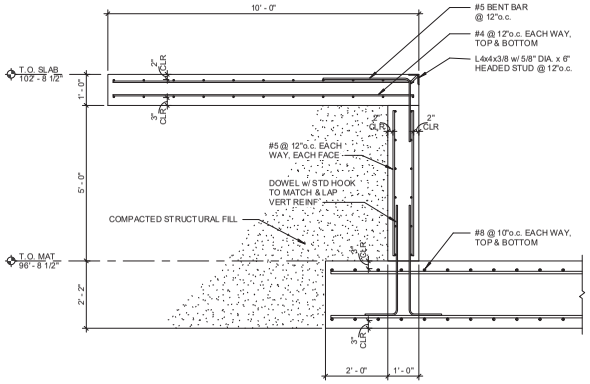

3 F303 FOUNDATION SECTION
1/2" = 1'-0"

ISSUED FOR CONSTRUCTION

McMAHON
ENGINEERS ARCHITECTS
McMAHON ASSOCIATES, INC.
1445 McMAHON DRIVE NEENAH, WI 54956
Mailing Address: P.O. BOX 1025 NEENAH, WI 54957-1025
Tel: (920) 751-4200 Fax: (920) 751-4284
www.mcmgrp.com

McMahon Associates, Inc. to provide the drawing and data, regardless of form, as instruments of service. All rights including copyright are retained by McMahon Associates, Inc. The client and/or recipient agrees to the fullest extent permitted by law to indemnify and hold McMahon Associates, Inc. harmless for any reuse of or changes made to the original drawing or data without prior written consent by McMahon Associates, Inc.

NO.	DATE	REVISIONS
1		CLIENT NAME UPDATE

LOADOUT STRUCTURE
VITA PLUS DODGEVILLE
DODGEVILLE, WI
FOUNDATION DETAILS

DESIGNED	DRAWN
PEB	RLN

PROJECT NO.
V103609-25-00252
DATE
4-24-25
SHEET NO.
F303

5/30/2025 10:47:55 AM
C:\Users\aklarner\OneDrive - McMahon Associates\Documents\LOADOUT ADDITION FND_Aklarner.rvt