Return Completed Form To:
Planning and Zoning
108 Sherman Street
Deadwood, SD 57732

Questions Contact:
Kevin Kuchenbecker
(605) 578-2082 or
kevin@cityofdeadwood.com

Application No. _____

APPLICATION FOR CONDITIONAL USE PERMIT

Application Fee: $500.00

Applicants: Please read thoroughly prior to completing this form. Only complete applications will be considered for review.

Name of Proposed Development: Ayres Hardware / Beuter Building

Street Location of Property: 596 Main Street Deadwood, SD

Legal Description of Property: Original Town Deadwood Lot 34 Blk 15 Plt BK1 PG 19

Zoning Classification of Property: Commercial

Name of Property Owner: JVK-SD, LLC Telephone: (602) 910-3161

Address: 2851 W Kathleen Road Phoenix, AZ 85053
Street City State Zip

Name of Applicant: Jack Kucera Telephone: (602) 919-3161

Address: 21245 US Hwy 14A Lead, SD
Street City State Zip

1. **The following documents shall be submitted:**
   a. An improvement survey, including all easements,
   b. Development plan, including site plan with location of buildings, usable open space, off-street parking, loading areas, refuse area, ingress/egress, screening, proposed or existing signage, existing streets, and
   c. A written statement addressing the criteria for approval.

Uses of Building or Land: Retail spac on ground floor; VHE upstairs

Signature of Applicant: Jack Kucera Date: April 9, 2024

Signature of Property Owner: _____ Date: _____

Fee: $ 500 Paid On 4/17/24 Receipt Number 9261

Legal Notice Published **Date:** _____ **Hearing Date:** _____

PLANNING AND ZONING ADMINISTRATOR:				
Approved/P&Z Administrator:	Yes	No	Signature: _____	Date: _____
PLANNING AND ZONING COMMISSION:				
Approved/P&Z Commission:	Yes	No	Date: _____	
DEADWOOD BOARD OF ADJUSTMENT:				
Approved/City Commission:	Yes	No	Date: _____	

Reason for Denial (if necessary): _____

Account Management - (View)

File Edit Options Functions Consoles Help Chat

Account Number 1-310027-01 New Occupant

Zone 1 ** Notes **

Address 596 MAIN ST

Name KUCERA, JACK

General | Metered | Non-Metered | Financial | Information | Comments | History | Consumption History | Service Orders | Devices

Pending Activity 0.00

Balance 447.49CR

Filter

Drag a column header here to group by that column

Date	Packet	Type	Receipt #	Reference	Debits	Credits	Balance
04/30/2024	009261	Adjustment		CORRECT TO CUP PMT	500.00		447.49CR
04/17/2024	009244	Payment	192960	3370598811		500.00	947.49CR
04/05/2024	009231	Adjustment		APPLY CREDITS			447.49CR
04/05/2024	009231	Bill		2/29- 3/29 04/29	97.64		447.49CR
03/07/2024	009191	Adjustment		APPLY CREDITS			545.13CR
03/07/2024	009191	Bill		1/31- 2/29 03/27	89.85		545.13CR
02/07/2024	009153	Adjustment		APPLY CREDITS			634.98CR
02/07/2024	009153	Bill		12/29- 1/31 02/27	92.71		634.98CR
01/08/2024	009113	Adjustment		APPLY CREDITS			727.69CR
01/08/2024	009113	Bill		11/30-12/29 01/29	82.97		727.69CR
12/07/2023	009076	Adjustment		APPLY CREDITS			810.66CR
12/07/2023	009076	Bill		10/31-11/30 12/27	87.24		810.66CR
11/07/2023	009041	Adjustment		APPLY CREDITS			897.90CR
11/07/2023	009041	Bill		9/30-10/31 11/27	102.10		897.90CR
11/02/2023	009034	Payment	189388	3214256150		1,000.00	1,000.00CR

Edit This Record

Clear

View | jan

Ayres Hardware – Beuter Building

596 Main Street

The downstairs space is retail space, currently occupied by the Beef Jerky Outlet on a 5-year lease with an option to renew for an additional 5 years. The apartment upstairs is available as an Airbnb rental. Rentals are not regular, but rather sporadic. It has the highest rating of any Airbnb property available in Deadwood, a tribute to my brother and his wife who operate it. Usage is driven by events in Deadwood and the Black Hills, as well as snow conditions that bring snowmobilers and skiers. My brother and his wife have several acres on the outskirts of Deadwood where Airbnb tenants park their snowmobile or motorcycle trailers, if parking is needed. The majority of the time, there are 2 to 4 occupants. On rare occasions, mostly families with children (there are two bedrooms with queen beds, the third has bunk beds), there may be up to 6 occupants. To the best of my knowledge, there has never in our history of ownership of the building been a noise complaint, so we don't have a noise mitigation plan.

MECHANICAL REMOVAL NOTES:

- M1 SEE SPECIFICATIONS FOR MATERIALS AND METHODS.
- M2 EXISTING UNDERGROUND GAS SERVICE TO REMAIN.
- M3 EXISTING GAS METER TO REMAIN, UPGRADE REGULATOR PER GAS CO. REQUIREMENTS.
- M4 REMOVE ALL EXISTING GAS PIPING INCLUDING ALL GAS PIPING UP TO HEATERS IN APARTMENT ABOVE.
- M5 PATCH EXISTING HOLES FOR GAS PIPING THROUGH FLOORS AND STONE WALLS.
- M6 REMOVE EXISTING GAS HEATER AND HANGERS. REMOVE FLUE.
- M7 REMOVE FLUE UP TO SECOND STORY. CAP TEE SO EXISTING APARTMENT HEATERS CAN STILL OPERATE. PATCHING OF EXISTING BRICK WALL BY GENERAL CONTRACTOR.
- M8 REMOVE EXISTING EXHAUST DUCT UP INTO APARTMENT AND OUT WINDOW ON SECOND FLOOR. PATCHING OF WINDOW AND FLOOR BY G.C.
- M9 REPLACE EXISTING 4" SANITARY SEWER THAT IS ROUTED THROUGH CEILING JOISTS.
- M10 REMOVE EXISTING EXPOSED WASTE THAT FEEDS SINKS AND BATH TUB ON SECOND FLOOR.
- M11 REMOVE EXISTING 4" SANITARY SEWER STACK BACK TO SEWER ENTRANCE IN BASEMENT, WASTE TO BE REPLACED.
- M12 REPLACE EXISTING BUILDING VENT UP THROUGH ROOF.
- M13 REMOVE EXISTING DOMESTIC WATER SYSTEM FROM METER TO ALL FIXTURES.
- M14 REMOVE DOMESTIC WATER TO ALL APARTMENT FIXTURES AND WATER HEATER. THESE WILL BE RECONNECTED IN FUTURE REMODEL.
- M15 REMOVE EXISTING FIXTURES AND ALL ASSOCIATED WASTE AND VENT PIPING.

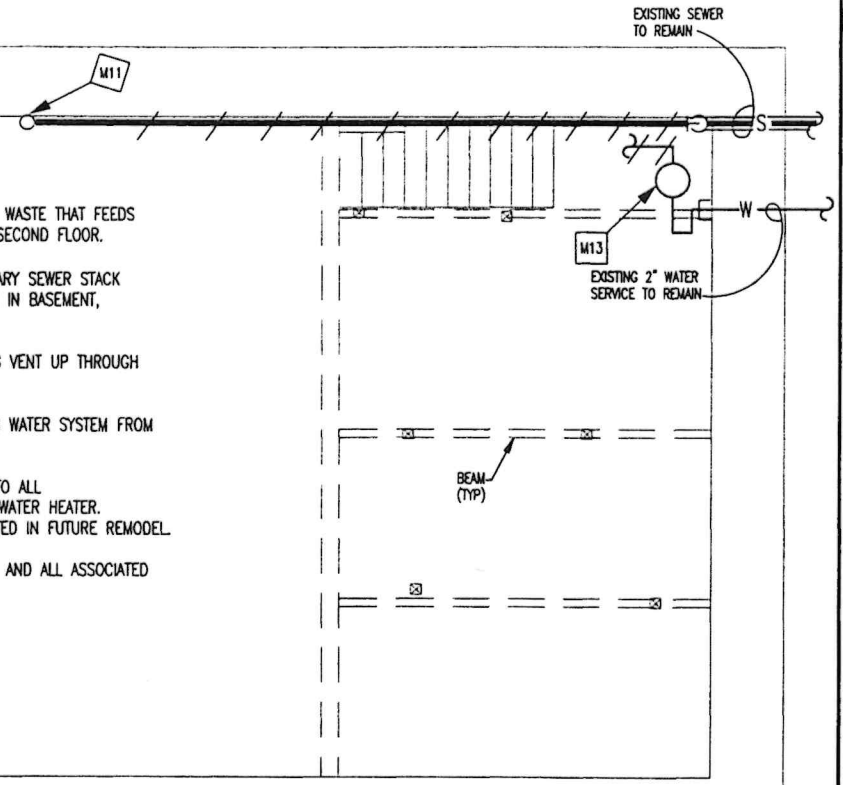

BASEMENT FLOOR PLAN – MECHANICAL REMOVAL

SCALE 1/4"=1'-0"

JOHN W. HEY & COMPANY
CONSULTING ENGINEER

REGISTERED PROFESSIONAL ENGINEER
REG. NO. 3016
JOHN W. HEY
SOUTH DAKOTA
5/6/08

NO.	DATE	DESCRIPTION
NO.	DATE	DESCRIPTION
NO.	DATE	DESCRIPTION
NO.	DATE	DESCRIPTION
NO.	DATE	DESCRIPTION
NO.	DATE	DESCRIPTION

TITLE

BASEMENT MECHANICAL REMOVAL FLOOR PLAN

TSP A Professional Design Group
TSP Three, Inc.
600 Kansas City Street • Rapid City • South Dakota • 57701
(605) 343-6102 FAX (605) 343-7150

RENOVATION OF AYRES HARDWARE DEADWOOD, SD

Project No.: 87154
File Name: -
Drawn By: MC
Checked By: JWH
Date: 5/6/08

M-1

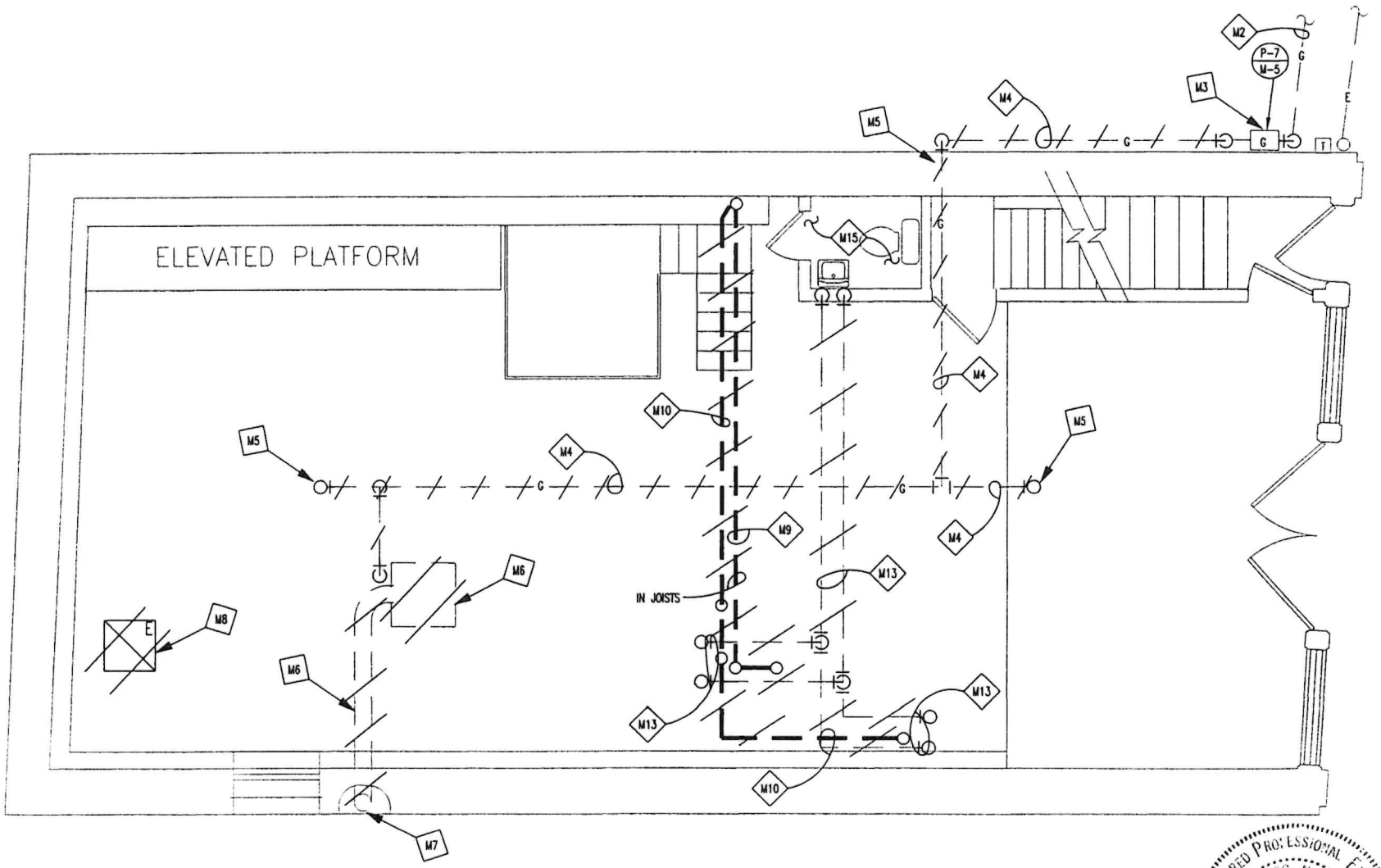

FIRST FLOOR PLAN – MECHANICAL REMOVAL

SCALE 1/8"=1'-0"

SEE SHEET M-1 FOR REMOVAL NOTES

JOHN W. HEY & COMPANY
CONSULTING ENGINEER

REGISTERED PROFESSIONAL ENGINEER
REG. NO. 3016
5/16/08

NO.	DATE	DESCRIPTION
NO.	DATE	DESCRIPTION
NO.	DATE	DESCRIPTION
NO.	DATE	DESCRIPTION
NO.	DATE	DESCRIPTION

TITLE

FIRST FLOOR MECHANICAL REMOVAL FLOOR PLAN

TSP A Professional Design Group
TSP Three, Inc.
600 Kansas City Street• Rapid City• South Dakota•57701

RENOVATION OF AYRES HARDWARE DEADWOOD, SD

Project No.: 07154
File Name: –
Drawn By: MS
Checked By: JWH
Date: 5/8/08

M-2

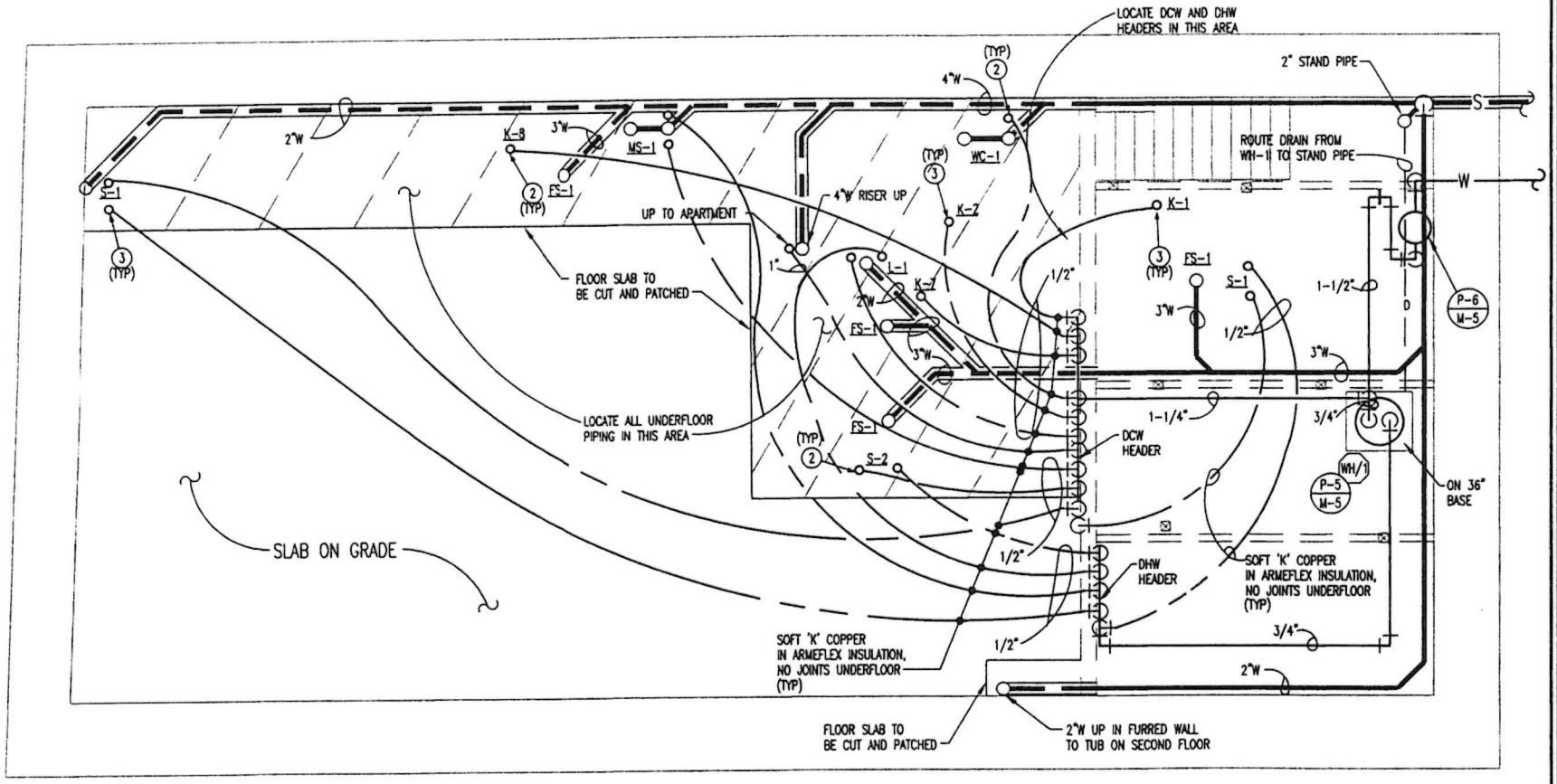

BASEMENT FLOOR PLAN – PIPING

SCALE 1/4"=1'-0"

(SEE SHEET M-4 FOR PLMBING NOTES)

JOHN W. HEY & COMPANY
CONSULTING ENGINEER

REGISTERED PROFESSIONAL ENGINEER
REG. NO. 3016
JOHN W. HEY
SOUTH DAKOTA

NO.	DATE	DESCRIPTION
NO.	DATE	DESCRIPTION
NO.	DATE	DESCRIPTION
NO.	DATE	DESCRIPTION
NO.	DATE	DESCRIPTION
NO.	DATE	DESCRIPTION

TITLE

BASEMENT PIPING FLOOR PLAN

TSP A Professional Design Group
TSP Three, Inc.
600 Kansas City Street • Rapid City • South Dakota • 57701
(605) 343-8102 FAX (605) 343-7158

RENOVATION OF AYRES HARDWARE DEADWOOD, SD

Project No.: 97154
File Name: -
Drawn By: MC
Checked By: JWH
Date: 3/8/98

M-3

PLUMBING NOTES:

1. SEE SPECIFICATIONS FOR MATERIALS AND METHODS.
2. PROVIDE SLEEVES THROUGH ALL WALL AND FLOOR PENETRATIONS.
3. PROVIDE 3/8" SUPPLY STOP ABOVE SLAB.
4. PIPE DRAIN TO FLOOR SINK, MAINTAIN 1" AIR GAP.
5. GAS PEDESTAL MANUFACTURED BY CHICAGO FAUCET - 981-TWO TURRET W/2 - 907 GAS VALVES.
6. RECONNECT WASTE TO EXISTING FIXTURE.

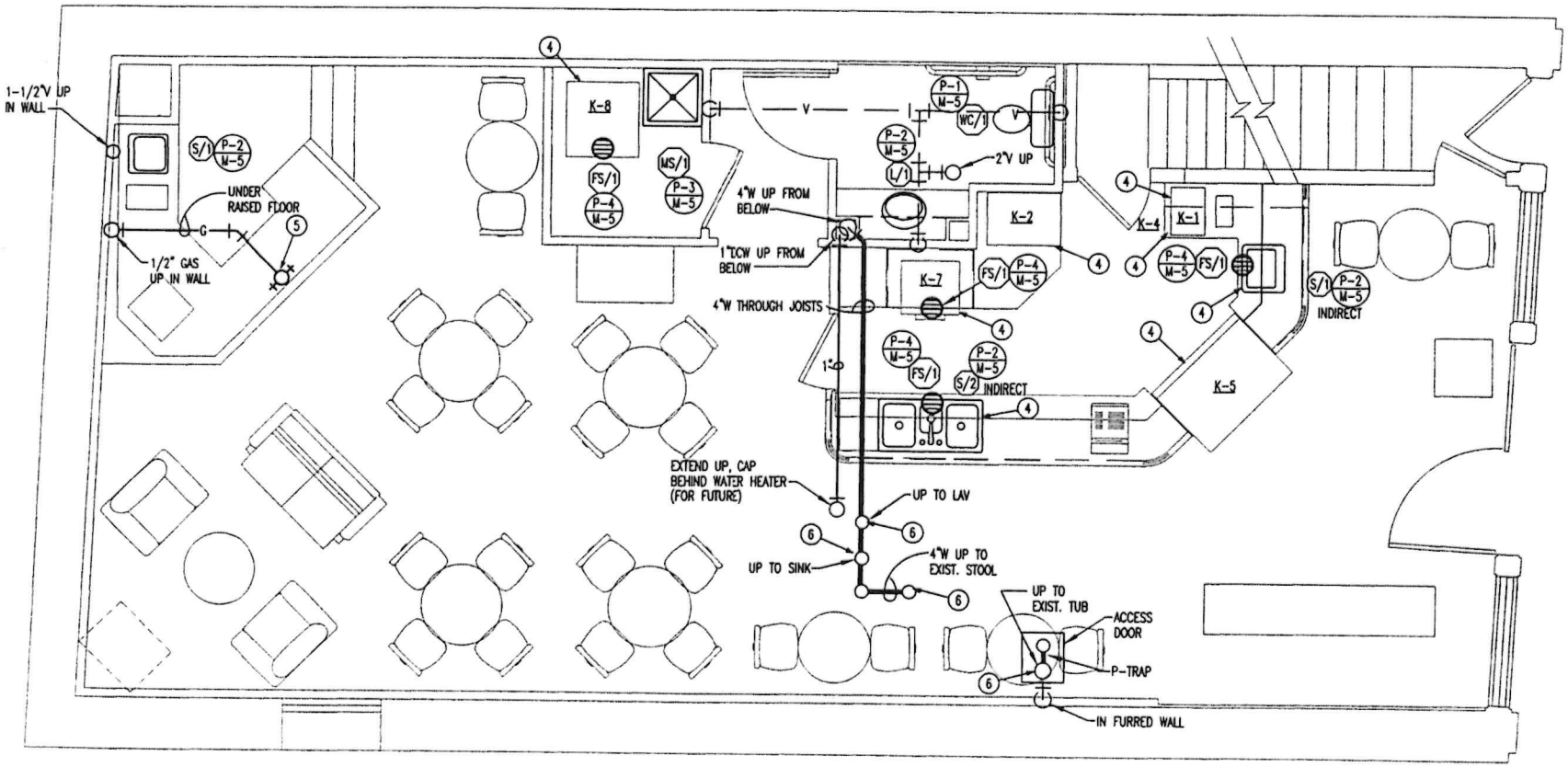

FIRST FLOOR PLAN – PIPING

SCALE 1/4"=1'-0"

JOHN W. HEY & COMPANY
CONSULTING ENGINEER

REGISTERED PROFESSIONAL ENGINEER
REG. NO. 8016
5/16/98

NO.	DATE	DESCRIPTION
01	DATE	DESCRIPTION
02	DATE	DESCRIPTION
03	DATE	DESCRIPTION
04	DATE	DESCRIPTION
05	DATE	DESCRIPTION
06	DATE	DESCRIPTION

TITLE

FIRST FLOOR PIPING FLOOR PLAN

TSP A Professional Design Group
TSP Three, Inc.
600 Kansas City Street • Rapid City • South Dakota • 57701
(605) 343-6102 FAX (605) 343-7159

RENOVATION OF AYRES HARDWARE DEADWOOD, SD

Project No.: 97154
File Name: –
Drawn By: MC
Checked By: JBH
Date: 5/8/98

M-4

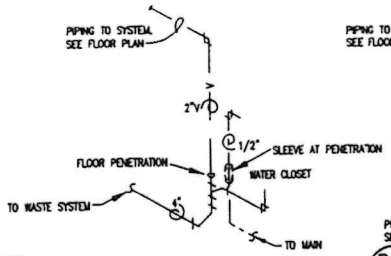

P-1 / M-5 TYPICAL WATER CLOSET DETAIL (TANK TYPE)
NTS
NO DOMESTIC WATER FITTINGS BELOW FLOOR

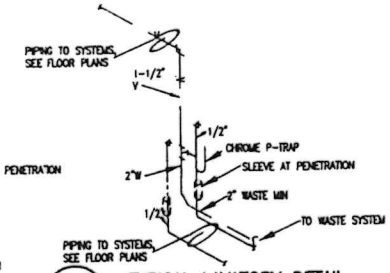

P-2 / M-5 TYPICAL LAVATORY DETAIL
NO SCALE
(TYPICAL FOR S-1, S-2 WITH INDIRECT WASTE)
NO DOMESTIC WATER FITTINGS BELOW FLOOR

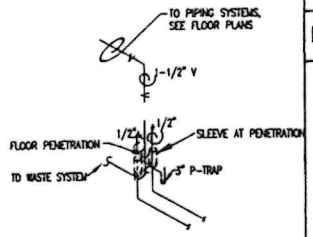

P-3 / M-5 MOP SINK DETAIL
NO SCALE
NO DOMESTIC WATER FITTINGS BELOW FLOOR

PLUMBING FIXTURE SCHEDULE

DESIG	MANUFACTURE AND MODEL NO.	LINE SIZE INCHES DCW	DHW	W
WC-1	(HANDICAPPED) FLOOR MOUNT - TANK TYPE WATERCLOSET - ELONGATED BOWL - WHITE AMERICAN STANDARD 2216.143 - 17" RIM HEIGHT - 1.6 GALLON FLUSH. CHURCH #9400KNSSC OPEN FRONT SEAT - PROVIDE CHROME LOOSE KEY HANDLE STOP & SUPPLY.	1/2	—	4
L-1	(HANDICAPPED) DROP IN LAVATORY - AMERICAN STANDARD 3303.000 - ENAMELED CAST IRON - WHITE. SINGLE LEVER FAUCET - RELIANT 2.385.002 WITH OPEN GRID DRAIN, LESS POP-UP. PROVIDE CHROME P-TRAP, LOOSE KEY SUPPLIES & STOPS. MOUNT AT STANDARD HEIGHT 34". PROVIDE P-TRAP & HOT WATER PIPING COVERING SIMILAR TO HANDI LAV-GUARD.	1/2	1/2	2
S-1	SINGLE COMPARTMENT STAINLESS STEEL SINK - ELKAY DLR 1919 - 19"X19"X10" DEEP. GOOSENECK FAUCET DELTA 2170 CHROME WITH ACRYLIC KNOBS. PROVIDE CHROME BASKET STRAINER, CHROME SUPPLIES & STOPS, & CHROME P-TRAP.	1/2	1/2	2
S-2	TRIPLE COMPARTMENT STAINLESS STEEL SINK BY GENERAL CONTRACTOR W/STAINLESS STEEL TRIM PUNCHED FOR ELKAY UK-4301F. PROVIDE BASKET STRAINERS, CONTINUOUS WASTE, CHROME P-TRAP, CHROME STOPS & KEYS.	1/2	1/2	2
MS-1	FLOOR MOUNT MOP SINK - FIAT #2424 WITH #830-AA SERVICE FAUCET, #1453-BB STRAINER, #889-CC MOP HANGER, #832-AA HOSE AND BRACKET. 2 - VINYL BUMPER GUARDS.	1/2	1/2	3
WH-1	ELECTRIC WATER HEATER WITH STORAGE - A.O. SMITH PEC-30. 30 GALLON, 2-3000 WATT ELEMENTS, NON SIMULTANEOUS, 208V,1 PH. PROVIDE TEMPERATURE AND PRESSURE RELIEF VALVE.	3/4"	3/4"	—
FS-1	WHITE PVC SQUARE FLOOR SINK-881-3PX, WITH DOME STRAINER-881-3SD, 3" WASTE PIPE SIZE. PROVIDE FRAME AND GRATE-881-5.	—	—	3"

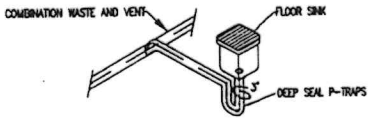

P-4 / M-5 TYPICAL FLOOR SINK DETAIL
NO SCALE

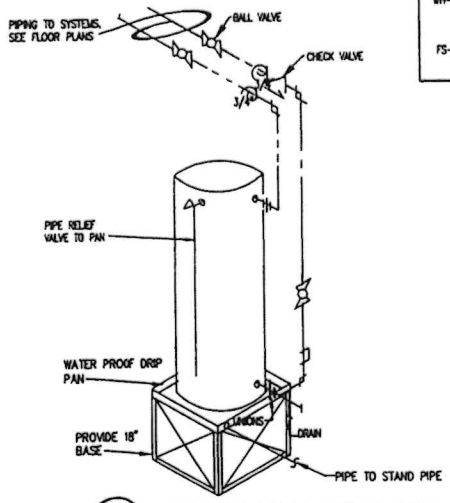

P-5 / M-5 DOMESTIC WATER HEATER DETAIL
NO SCALE

FIXTURE UNIT SCHEDULE

COUNT		WASTE UNIT	WASTE TOTAL	DOMESTIC WATER HEATER CW UNITS	CW TOTAL	HW UNITS	HW TOTAL
1	WC-1	6	6	5	5	-	-
1	L-1	2	2	2	2	2	2
2	S-1	2	4	2	4	2	4
1	S-2	2	2	2	2	2	2
1	MS-1	3	3	3	3	3	3
4	FS-1	3	12	-	-	-	-
			29		16		11

TOTAL WASTE FIXTURE UNITS - 29
SERVER SIZE = 4"@1/8" GRADE MIN. - 4"
TOTAL DOMESTIC COLD WATER UNITS - 16
WATER SERVICE SIZE = 2"
TOTAL DOMESTIC HOT WATER UNITS - 11

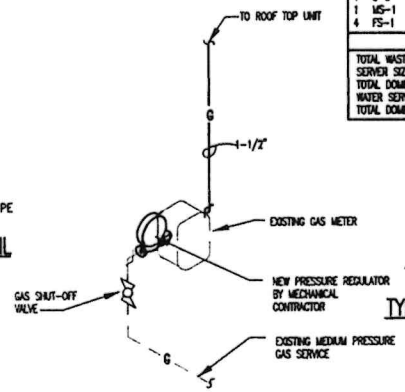

P-7 / M-5 GAS SERVICE DETAIL
NO SCALE

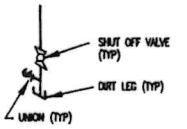

TYP. UNIT CONNECTION

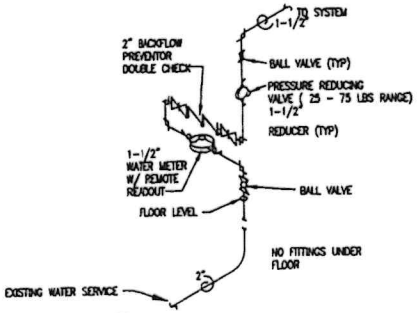

P-6 / M-5 WATER SERVICE DETAIL
NO SCALE

JOHN W. HEY & COMPANY
CONSULTING ENGINEER

REGISTERED PROFESSIONAL ENGINEER
REG. NO. 3016
JOHN T.
5/6/98

TITLE

NO.	DATE	DESCRIPTION
NO.	DATE	DESCRIPTION
NO.	DATE	DESCRIPTION
NO.	DATE	DESCRIPTION
NO.	DATE	DESCRIPTION
NO.	DATE	DESCRIPTION

PLUMBING SCHEDULES AND DETAILS

TSP A Professional Design Group
TSP Three, Inc.
600 Kansas City Street • Rapid City • South Dakota • 57701
(605) 343-6102 FAX (605) 343-7159

RENOVATION OF AYRES HARDWARE DEADWOOD, SD

Project No.: 97154
File Name: -
Drawn By: MC
Checked By: JWH
Date: 5/6/98

M-5

HVAC NOTES:

1. SEE SPECIFICATIONS FOR MATERIALS AND METHODS.
2. PROVIDE SLEEVES AT ALL PENETRATIONS.
3. 20"x14" RETURN DUCT DOWN THROUGH FLOOR, PROVIDE FOR CUTTING AND PATCHING OF FLOOR.
4. 20"x20" SUPPLY DUCT DOWN THROUGH FLOOR, PROVIDE FOR CUTTING AND PATCHING OF FLOOR.
5. TRANSITION DUCT SIZE TO UNIT INTAKE SIZE, PROVIDE FOR CUTTING AND PATCHING OF ROOF AND CEILING.
6. TRANSITION DUCT SIZE TO UNIT DISCHARGE SIZE, PROVIDE TURNING VANES. PROVIDE FOR CUTTING AND PATCHING OF ROOF AND CEILING.
7. 1/2" GAS DOWN THROUGH ATTIC, PROVIDE FOR CUTTING AND PATCHING OF ROOF AND CEILING. PROVIDE WEATHERPROOF FLASHING.

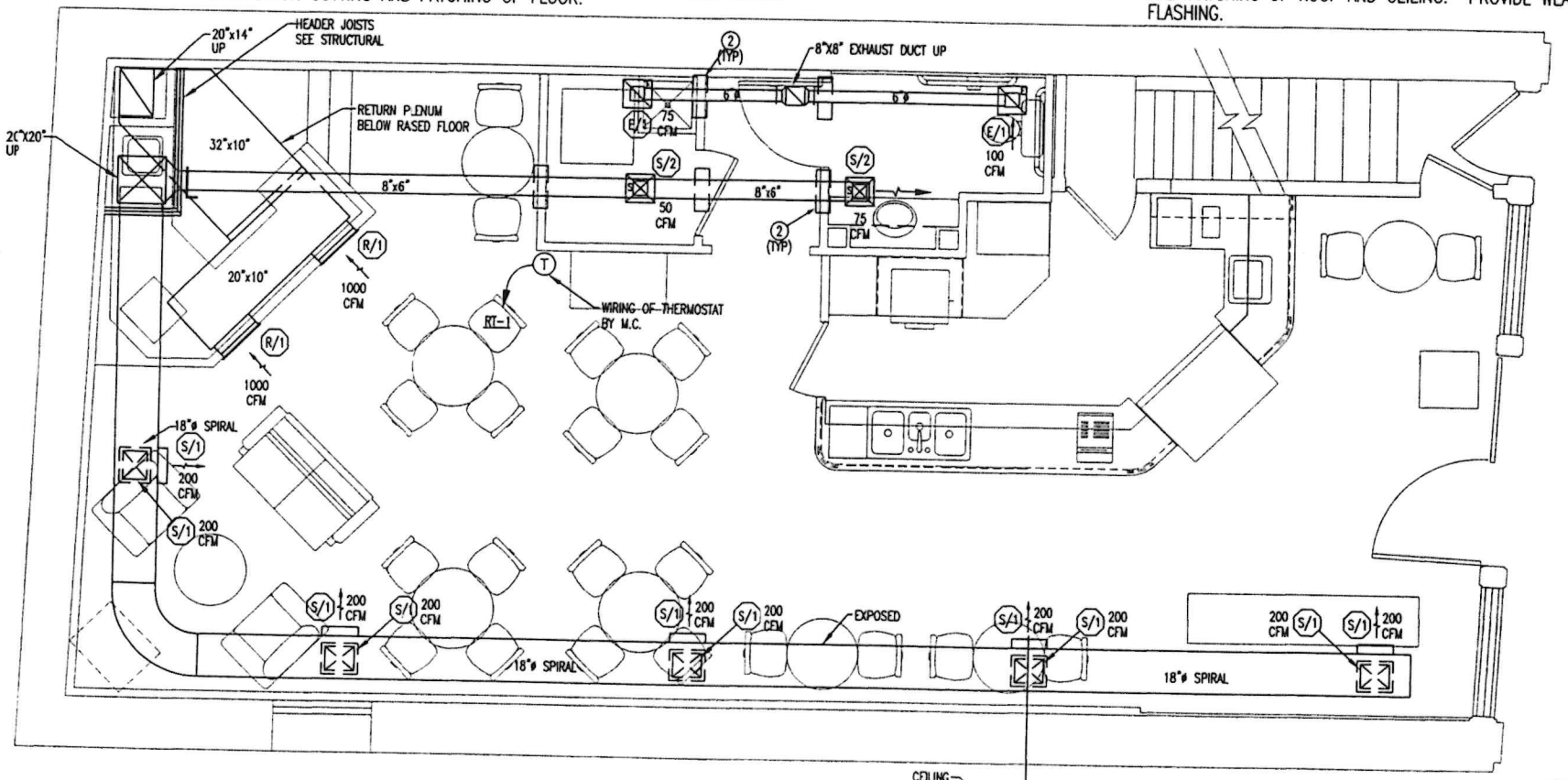

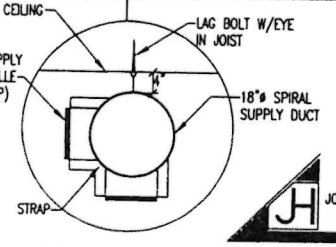

FIRST FLOOR PLAN – HVAC

SCALE 1/4"=1'-0"

JOHN W. HEY & COMPANY
CONSULTING ENGINEER

REGISTERED PROFESSIONAL ENGINEER
REG. NO. 3015
5/6/98

NO.	DATE	DESCRIPTION
NO.	DATE	DESCRIPTION
NO.	DATE	DESCRIPTION
NO.	DATE	DESCRIPTION
NO.	DATE	DESCRIPTION
NO.	DATE	DESCRIPTION

TITLE

FIRST FLOOR HVAC FLOOR PLAN

TSP A Professional Design Group
TSP Three, Inc.
600 Kansas City Street• Rapid City• South Dakota•57701
(605) 343-6102 FAX (605) 343-7159

RENOVATION OF AYRES HARDWARE DEADWOOD, SD

Project No.: 97134
File Name: –
Drawn By: MC
Checked By: JWH
Date: 5/6/98

M-6

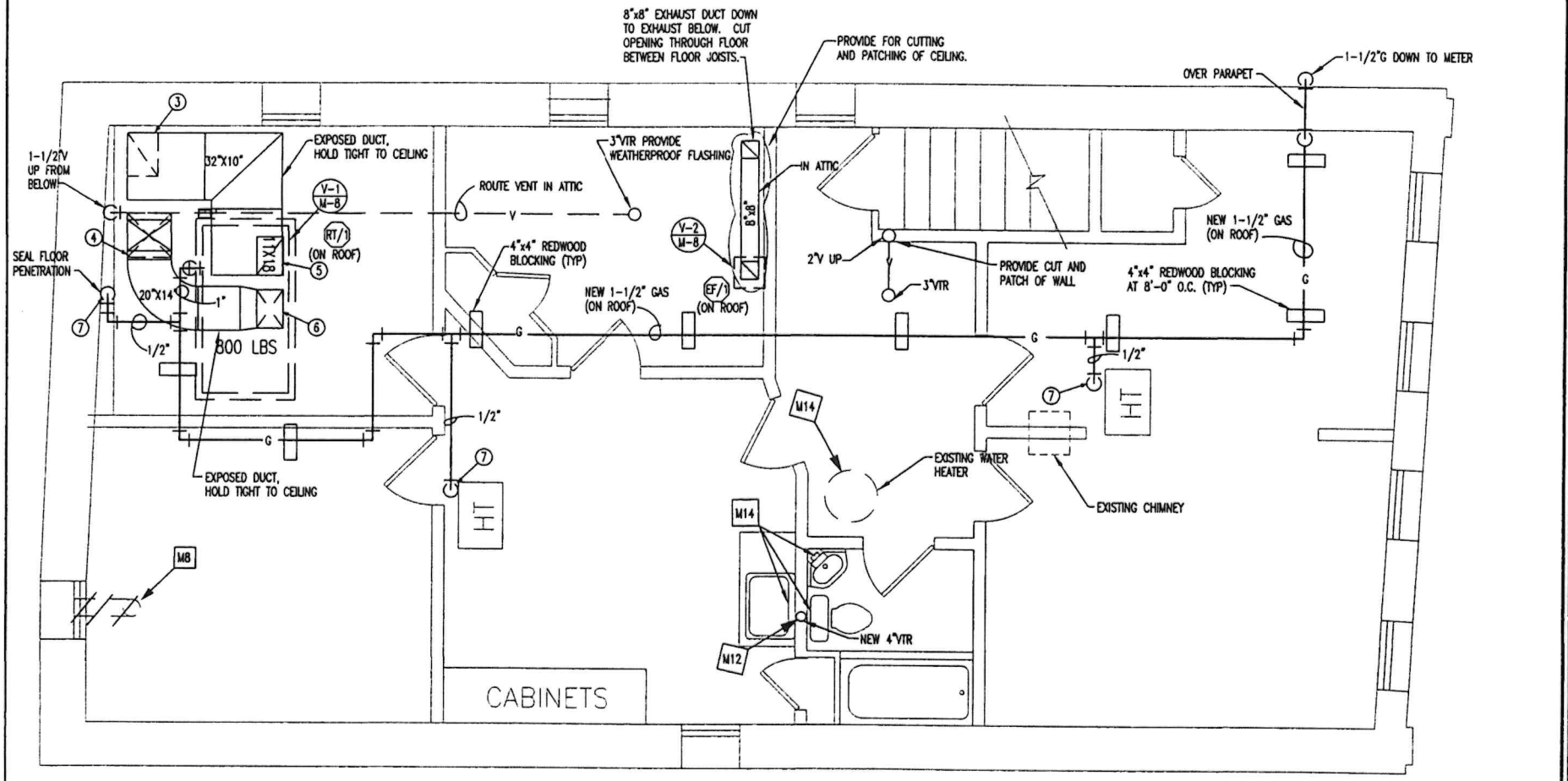

SECOND FLOOR PLAN – MECHANICAL REMOVAL/HVAC

SCALE 1/4"=1'-0"

SEE SHEET M-1 FOR MECHANICAL REMOVAL NOTES

SEE SHEET M-6 FOR HVAC NOTES

JOHN W. HEY & COMPANY
CONSULTING ENGINEER

REGISTERED PROFESSIONAL ENGINEER
REG. NO. 3016
5/16/98

TITLE		
NO.	DATE	DESCRIPTION
NO.	DATE	DESCRIPTION
NO.	DATE	DESCRIPTION
NO.	DATE	DESCRIPTION
NO.	DATE	DESCRIPTION
NO.	DATE	DESCRIPTION

SECOND FLOOR MECHANICAL REMOVAL/HVAC FLOOR PLAN

TSP A Professional Design Group
TSP Three, Inc.
600 Kansas City Street • Rapid City • South Dakota • 57701
(605) 343-6102 FAX (605) 343-7159

RENOVATION OF AYRES HARDWARE DEADWOOD, SD

Project No.: 97154
File Name:
Drawn By: MG
Checked By: JWH
Date: 5/16/98

M-7

ROOF-TOP UNIT SCHEDULE

DESIGN	LOCATION	MANUFACTURER & MODEL NO.	CURB HEIGHT	COOLING TOTAL CAP MBH	COOLING SENS. CAP MBH	COOLING EAT F.	COOLING LAT F.	COOLING AMBIENT F.	HEATING INPUT MBH	HEATING OUTPUT MBH	HEATING STAGES	HEATING FUEL HG-P-E	BLOWER CFM	BLOWER ESP IN H2O	MOTOR HP	MOTOR RPM	MIN CIRC AMPS	MAXIMUM OVERLOAD PROTECTION	VOLTAGE	COMMENTS	OUTSIDE AIR (CFM)
RT-1	ROOF (WEST)	GAS FIRED ROOF-TOP UNIT YORK DCG060H379 (5 TON)	14"	63.0	46.0	80	67	95	100	79	1	NG	2125	0.60	1.5	1040	32.4	50	208V_3PH	INSULATED CURB & FLASHING, ECONOMIZER W/ OUTSIDE AIR CONTROL, LOW AMBIENT COMPRESSOR LOCKOUT	400

EXHAUST FAN SCHEDULE

DESIGN	LOCATION	MANUFACTURE & MODEL NO.	CFM	ESP	RPM	BHP	HP	VOLTAGE	SONES	COMMENTS
EF-1	ROOF	DOWN BLAST ROOF-TOP FAN LOREN COOK ACE-90C150H	175	0.625	1550	148W	1/8	110 V	7.5	INSULATED CURB & FLASHING, AUTOMATIC BACKDRAFT DAMPER

PROVIDE STANDARD HEATING COOLING STATS WITH AUTOMATIC CHANGE OVER
PROVIDE FIVE YEAR COMPRESSOR WARRENTY
PROVIDE 14 MIN HEIGHT CURBS ABOUT TOP OF ROOF.
BLOWERS SHALL BE BELT DRIVEN.
PROVIDE HAIL GUARDS.

MECHANICAL SYMBOLS

- SUPPLY DUCT UP
- SUPPLY DUCT DOWN
- RETURN DUCT
- TURNING VANES
- TRANSITION
- CONICAL TAKE-OFF WITH MANUAL DAMPER
- SUPPLY DIFFUSER
- RETURN GRILLE
- AIR FLOW
- EQUIPMENT DESIGNATION
- FIRE DAMPER
- HOT WATER SUPPLY (HEATING)
- HOT WATER RETURN (HEATING)
- NATURAL GAS
- UPRIGHT FIRE PROTECTION HEAD
- PENDANT FIRE PROTECTION HEAD
- BALL VALVE
- GATE VALVE
- CHECK VALVE
- UNION
- PIPE UP
- PIPE DOWN
- DOMESTIC COLD WATER DCW
- DOMESTIC HOT WATER DHW
- DOMESTIC HOT WATER RECIR DHWR
- UNDERGROUND WASTE AND VENT
- ABOVE GROUND WASTE
- ABOVE GROUND VENT

REGISTER & GRILLE SCHEDULE

DESIGN	MANUFACTURER & MODEL NO.	SIZE	CFM RANGE
S-1	SIDEWALL SUPPLY TUTTLE & BAILEY A84 ALUMINUM CONSTRUCTION - WHITE	12"Wx10"H	0 - 200
S-2	SURFACE MOUNT SUPPLY TUTTLE & BAILEY PCBS ALUMINUM CONSTRUCTION - WHITE	6"x6"N 12"x12"F	0 - 75
R-1	SIDEWALL RETURN TUTTLE & BAILEY T1100G STEEL CONSTRUCTION - WHITE	22"Wx10"H	0 - 1000
E-1	SURFACE MOUNT EXHAUST GRILLE TUTTLE & BAILEY PCBS ALUMINUM CONSTRUCTION - WHITE	6"x6"N 12"x12"F	0 - 100

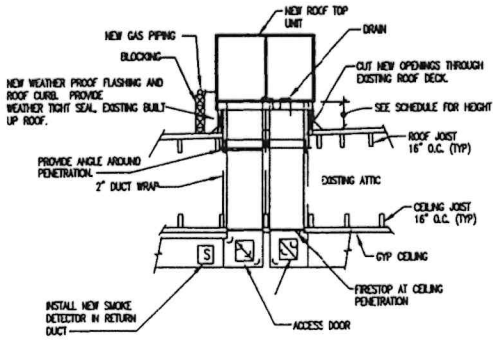

V-1 / M-8 ROOF TOP UNIT DETAIL
NO SCALE

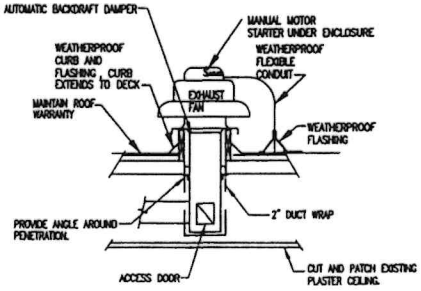

V-2 / M-8 EXHAUST FAN DETAIL
NO SCALE

JOHN W. HEY & COMPANY
CONSULTING ENGINEER

REGISTERED PROFESSIONAL ENGINEER
REG. NO.
2016
5/6/16

TITLE

NO	DATE	DESCRIPTION
NO	DATE	DESCRIPTION
NO	DATE	DESCRIPTION
NO	DATE	DESCRIPTION
NO	DATE	DESCRIPTION
NO	DATE	DESCRIPTION

HVAC SCHEDULES AND DETAILS

TSP A Professional Design Group
TSP Three, Inc.
600 Kansas City Street • Rapid City • South Dakota • 57701
(605) 343-6102 FAX (605) 343-7159

RENOVATION OF AYRES HARDWARE DEADWOOD, SD

Project No.: 97154
File Name: -
Drawn By: MC
Checked By: JWH
Date: 5/6/96

M-8