2025 CDBG FOR CITY OF DACULA SANJO STREET WIDENING, PAVING, DRAINAGE, AND SIDEWALK IMPROVEMENT PROJECT

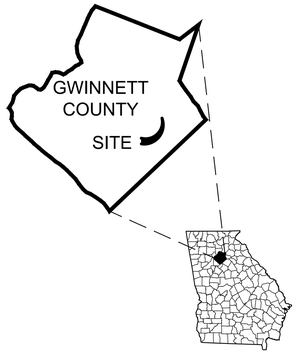

UTILITIES CONTACT INFORMATION	
UTILITY	CONTACT
GWINNETT COUNTY WATER AND SEWER	SHAWNA DOBSON, EMAIL: shawna.dobson@gwinnettcounty.com
GWINNETT COUNTY DOT	MICHELLE ARNOLD, PHONE: 770-822-7443
GAS	DARREN PERKINS, EMAIL: dperkins@cityofbuford.com
ELECTRICAL	TRISTAN PAYNE, EMAIL: tripayne@southernco.com
AT&T	ANTHONY STANCIL, EMAIL: as925n@att.com
AT&T	BILL SZYMANSKI, EMAIL: bs0368@att.com
CHARTER	JIMMY PRICE, EMAIL: Jimmy.Price@charter.com
MCI / VERIZON	ASH BELAVADI, EMAIL: ash.belavadi@verizon.com
ZAYO	COBB FINDLEY, EMAIL: ZayoGeorgiaRelocations@cobbfendley.com

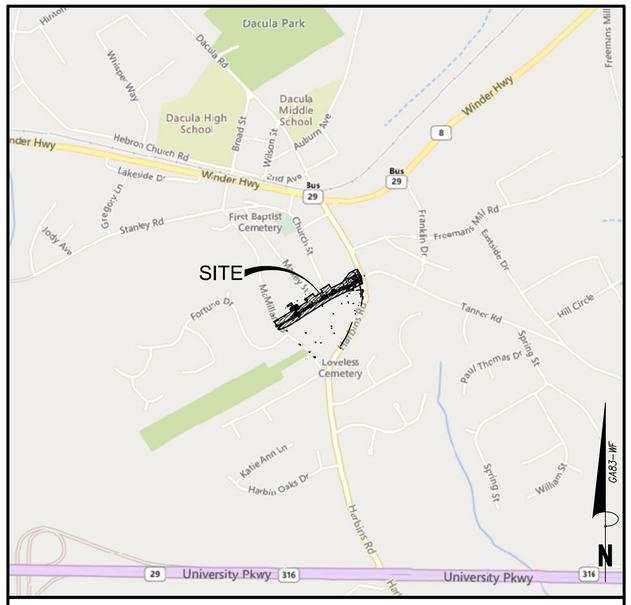

VICINITY MAP

SCALE : 1" = 2000'

GENERAL NOTES:

1. SITE AREA: 1.79 ACRES, DISTURBED AREA: 0.99 ACRES
2. EXISTING ZONING: RIGHT OF WAY
3. LOCATION: LAND LOTS 301 - 5th DISTRICT
   CITY OF DACULA
   GWINNETT COUNTY, GEORGIA
4. EXISTING USE: RESIDENTIAL AND UNDEVELOPED LAND.
5. PROPOSED USE: CITY RESIDENTIAL TWO-WAY STREET.
6. OWNER/DEVELOPER: CITY OF DACULA
   CONTACT PERSON: BRITTNI NIX (770) 963-7451
   P.O. BOX 400
   DACULA, GEORGIA, 30019
7. DESIGNER/ENGINEER: BOWMAN.
   CONTACT PERSON: STEVE DUREN (770)932-6550
   4174 SILVER PEAK PARKWAY
   SUWANEE, GEORGIA 30024

8. DO NOT SCALE DRAWINGS.

WETLANDS

THE DESIGN PROFESSIONAL, WHOSE SEAL APPEARS HEREON, CERTIFIES THE FOLLOWING: 1)THE NATIONAL WETLAND INVENTORY MAPS HAVE BEEN CONSULTED; AND, 2) THE APPROPRIATE PLAN SHEET ( ) DOES / (X) DOES NOT INDICATE AREAS OF UNITED STATES ARMY CORPS OF ENGINEERS JURISDICTIONAL WETLANDS AS SHOWN ON THE MAPS; AND, 3) IF WETLANDS ARE INDICATED, THE LAND OWNER OR DEVELOPER HAS BEEN ADVISED THAT LAND DISTURBANCE OF PROTECTED WETLANDS SHALL NOT OCCUR UNLESS THE APPROPRIATE FEDERAL WETLANDS ALTERATION ("SECTION 404") PERMIT HAS BEEN OBTAINED.

PROJECT DESCRIPTION:

THE PROJECT CONSISTS OF DEMOLITION OF ALL EXISTING ASPHALT, CURB & GUTTER, STRUCTURES AND HARDSCAPE, CLEARING AND GRUBBING EXISTING TREES WITHIN THE LIMITS OF THE RIGHT OF WAY OF SANJO STREET, CONSTRUCTION CITY STREET WIDENING.

ENGINEER/SURVEYOR:

BOWMAN
4174 SILVER PEAK PARKWAY
SUWANEE, GEORGIA 30024
PH: 770-932-6550 FX: 770-932-6551
ENGINEER CONTACT: VICTOR DANG, P.E. EMAIL: victor.dang@bowman.com

SITE VISIT CERTIFICATION:

"I CERTIFY UNDER PENALTY OF LAW THAT THIS PLAN WAS PREPARED AFTER A SITE VISIT TO THE LOCATIONS DESCRIBED HEREIN BY MYSELF OR MY AUTHORIZED AGENT, UNDER MY SUPERVISION."

11/21/25

VICTOR DANG, P.E. - GSWCC LEVEL II CERTIFICATION #90012 EXP: 12/19/2028 DATE

FLOODPLAIN:

PART OF THIS PROPERTY DOES NOT LIE WITHIN A SPECIAL FLOOD HAZARD AREA (SFHA) PER FEMA FIRM PANEL 13135C0076F DATED 9/29/2006.

STATE WATERS

STATE WATERS ARE NOT ON THIS SITE REQUIRING A 25' STATE UNDISTURBED BUFFER, 50' COUNTY UNDISTURBED BUFFER AND 75' IMPERVIOUS SETBACK MEASURED FROM THE TOP OF BANK.

RECEIVING WATERS UNNAMED TRIBUTARY TO HOPKINS CREEK

SURVEY:

THE BOUNDARY AND TOPOGRAPHIC INFORMATION SHOWN IS FROM A SURVEY PERFORMED BY BOWMAN DATED 08/09/2024. DATUM, MEAN SEA LEVEL, NAD83 GA WEST FOOT

DRAWING INDEX

Sheet Number	Sheet Title
C000	COVER SHEET
C001	GENERAL NOTES
C002	EXISTING CONDITIONS
C100	DEMOLITION PLAN
C200	SANJO STREET ROAD PLAN
C201	SANJO & TANNER INTERSECTION PLAN
C300	GRADING AND DRAINAGE PLAN
C310	ROAD PROFILE
C320	STORM PROFILE
C321	STORM PROFILE
C400	UTILITY PLAN
C500	EROSION CONTROL NOTES
C510	EROSION CONTROL PLAN PHASE I
C520	EROSION CONTROL PLAN PHASE II
C530	EROSION CONTROL PLAN PHASE III
C540	EROSION CONTROL PLAN DETAILS
C541	EROSION CONTROL PLAN DETAILS
C542	EROSION CONTROL PLAN DETAILS
C700	CONSTRUCTION DETAILS
C701	CONSTRUCTION DETAILS
C702	CONSTRUCTION DETAILS
C703	CONSTRUCTION DETAILS

Bowman
Certificate of Authorization License No. LSF001241

Bowman Consulting Group Ltd
4174 Silver Peak Parkway
Suwanee, GA 30024
Phone: (770) 932-6550
www.bowman.com

© 2021 Bowman Consulting Group Ltd

COVER SHEET
2025 CDBG FOR CITY OF DACULA
SANJO STREET WIDENING, PAVING, DRAINAGE, AND SIDEWALK IMPROVEMENTS PROJECT
CITY OF DACULA, GA
GWINNETT COUNTY

CONSULTANT PROJECT #
200577-01-001

GEORGIA REGISTERED PROFESSIONAL ENGINEER VICTOR Q. DANG
11/21/25

PLAN STATUS	
11/21/2025	BID SET
DATE	DESCRIPTION

KDW	RWH	SAD
DESIGN	DRAWN	CHKD

SCALE .

JOB No. 24-204(200577-01-001)

DATE : 11/14/2025

FILE No.

SHEET No. C000

GEORGIA811
www.Georgia811.com

November 21, 2025
File Path V:\200523 - City of Dacula\200523-01-001 (ENG) - Administrative Building\Engineering\Engineering Plans\SANJO SHEETS\200577-01-D SANJO C000 COV.dwg

THIS DOCUMENT, TOGETHER WITH THE CONCEPTS AND DESIGNS PRESENTED HEREIN, AS AN INSTRUMENT OF SERVICE, IS INTENDED ONLY FOR THE SPECIFIC PURPOSE AND CLIENT FOR WHICH IT WAS PREPARED. REUSE OF AND IMPROPER RELIANCE ON THIS DOCUMENT WITHOUT WRITTEN AUTHORIZATION AND ADAPTATION BY BOWMAN CONSULTING SHALL BE WITHOUT LIABILITY TO BOWMAN CONSULTING.

GENERAL NOTES:

1. CONTRACTOR SHALL VISIT THE SITE AND ACQUAINT HIMSELF WITH SITE CONDITIONS AND MAKE AN INSPECTION OF EXISTING CONDITIONS IN ORDER TO INFORM HIMSELF OF ALL THE EXISTING CONDITIONS ON THE PROJECT SITE.
2. CONTRACTOR IS RESPONSIBLE AS PART OF HIS CONTRACT FOR THE COMPLETION, SUBMITTAL AND ACQUISITION OF ANY CITY OF DACULA CERTIFICATION OF DEVELOPMENT COMPLIANCE OR EQUIVALENT DOCUMENTATION IN CONNECTION WITH ALL DOMESTIC WATER AND FIRE SERVICE SYSTEMS AS MAY BE REQUIRED BY GWINNETT COUNTY DEPARTMENT OF WATER RESOURCES OR THE GEORGIA STATE FIRE MARSHALL.
3. CONTRACTOR MAY, AT HIS OWN EXPENSE AND PRIOR TO BIDDING, MAKE SOILS SURVEYS AND INVESTIGATIONS HE CONSIDERS NECESSARY.
4. ALL CONSTRUCTION SHALL CONFORM TO THE CITY OF DACULA AND GWINNETT COUNTY DEVELOPMENT REGULATIONS AND ALL APPLICABLE GWINNETT COUNTY, STATE AND FEDERAL CODES, STANDARDS AND REGULATIONS.
5. ALL MATERIALS, METHODS OF CONSTRUCTION, AND WORKMANSHIP SHALL CONFORM TO APPLICABLE REQUIREMENTS OF ASTM AND AASHTO STANDARDS, UNLESS OTHERWISE SPECIFIED.
6. ALL SPECIFIED PRODUCTS ARE TO BE PROVIDED AS SPECIFIED OR "APPROVED EQUAL."
7. THE UTILITIES SHOWN HAVE BEEN LOCATED IN AN APPROXIMATE WAY. THE CONTRACTOR IS RESPONSIBLE FOR HAVING ALL UTILITIES MARKED AND SHALL CONTACT THE UTILITY PROTECTION CENTER AT (1-800-282-7411) AND SHALL VERIFY THE HORIZONTAL AND VERTICAL LOCATION OF ALL UTILITIES, PROTECT ALL UTILITIES FROM DAMAGE OR INTERRUPTION, AND SHALL BE SOLELY RESPONSIBLE FOR ANY AND ALL DAMAGES OCCASIONED DUE TO HIS FAILURE TO VERIFY THE LOCATION OR PROTECT UTILITIES.
8. LOCATE EXISTING UNDERGROUND UTILITIES BY CAREFUL HAND EXCAVATION. PROTECT FROM DAMAGE OR INTERRUPTION ALL EXISTING SANITARY SEWER, WATER SERVICE, NATURAL GAS, POWER, ETC. DURING ALL PHASES OF CONSTRUCTION. DAMAGE TO EXISTING UTILITIES AND THE COST OF REPAIRS TO THOSE DAMAGED EXISTING UTILITY SERVICES ARE THE CONTRACTOR'S RESPONSIBILITY.
9. COST RELATED TO THE REMOVAL, RELOCATION , REPLACEMENT AND/OR REROUTING OF ANY, AND ALL EXISTING UTILITIES OR OTHER BUILT, STORED, STOCKPILED ITEMS OF ANY KIND, SURFACE OR SUBSURFACE IS THE RESPONSIBILITY OF THE CONTRACTOR AND WILL BE INCLUDED IN THE CONTRACT SUM.
10. CONTRACTOR SHALL BE FULLY RESPONSIBLE FOR ALL DAMAGE TO ANY PART OF THE SITE, BUILDING STRUCTURES OR OTHER INSTALLATIONS, CAUSED DURING CONSTRUCTION.
11. EROSION CONTROL MEASURES SHALL BE INSTALLED PRIOR TO ANY LAND DISTURBANCE ACTIVITY AND SHALL BE MAINTAINED THROUGHOUT THE DURATION OF CONSTRUCTION UNTIL PERMANENT VEGETATIVE COVER HAS BEEN ESTABLISH.
12. THE CONTRACTOR SHALL MAINTAIN THE EROSION CONTROL DEVICES DURING ALL PHASES OF CONSTRUCTION.
13. SUBMITTALS ARE TO BE TRANSMITTED IN ELECTRONIC FORMAT, AS APPROPRIATE TO THE DOCUMENT, AND TRANSMITTED VIA THE COUNTY'S INTERNET-BASED SUBMITTAL SERVICE.
    13.1. IN ADDITION TO SUBMITTALS FOR REVIEW, AND CLOSEOUT, THIS PROCEDURE APPLIES TO REQUESTS FOR INFORMATION (RFI'S), PROGRESS DOCUMENTATION, CONTRACT MODIFICATION DOCUMENTS (E.G., SUPPLEMENTARY INSTRUCTIONS, CHANGE PROPOSALS, CHANGE ORDERS), APPLICATIONS FOR PAYMENT, FIELD REPORTS AND MEETING MINUTES, CONTRACTOR'S CORRECTION PUNCH-LIST, AND ANY OTHER DOCUMENT ANY PARTICIPANT WISHES TO MAKE PART OF THE PROJECT RECORD.
14. BY MAKING HIS SUBMITTAL THE CONTRACTOR REPRESENTS THAT HE HAS SELECTED THE PRODUCTS CONSISTENT WITH THE DRAWINGS AND SPECIFICATIONS; AND HAS DETERMINED AND CONFIRMED THE FITNESS OF THE SELECTED PRODUCTS WITH ALL DETAILS AND DIMENSIONS CAN BE INTEGRATED TO COMPLETE THE WORK.
15. THE CONTRACTOR'S APPROVAL AND SUBMITTAL REPRESENTS THAT THE CONTRACTOR HAS DETERMINED AND VERIFIED MATERIALS, FIELD MEASUREMENTS AND FIELD CONSTRUCTION CRITERIA RELATED THERETO, OR WILL DO SO, AND HAS CHECKED AND COORDINATED THE INFORMATION WITHIN SUCH SUBMITTALS WITH THE REQUIREMENTS OF THE WORK AND OF THE CONTRACT DOCUMENTS.
16. SUBMITTALS NOT DATED, STAMPED, AND SIGNED BY THE CONTRACTOR WILL BE RETURNED AS "INCOMPLETE".
17. FOR EACH SUBMITTAL, ALLOW 14 DAYS FOR REVIEW, EXCLUDING DELIVERY TIME TO AND FROM CONTRACTOR.
18. CONTRACTOR WILL BE BACK CHARGED FOR COST OF ADDITIONAL SUBMITTAL REVIEWS.
19. SHOP DRAWINGS SHALL BE SUBMITED IN ELECTRONIC FORMAT THROUGH SELECTED SUBMITTAL SERVICE. OWNER WILL RETURN TO CONTRACTOR THROUGH SUBMITTAL SERVICE FOR PRINTING AND DISTRIBUTION.
    19.1. PRESENT INFORMATION IN CLEAR AND THOROUGH MANNER.
    19.2. IDENTIFY DETAILS BY REFERENCE TO SHEET AND DETAIL NUMBERS SHOWN ON DRAWINGS.
    19.3. SUBMIT SHOP DRAWINGS FOR REVIEW AND APPROVAL PRIOR TO PURCHASE, CONSTRUCTION OR PLACEMENT OF PRODUCTS/MATERIALS REQUIRING SHOP DRAWING REVIEW.
    19.4. CONTRACTOR SHALL ASSUME TOTAL RESPONSIBILITY FOR STEEL REINFORCING COVERED WITH CONCRETE FOR WHICH SHOP DRAWINGS HAVE NOT BEEN REVIEWED.
    19.5. SHOP DRAWINGS SUBMITTED AFTER MATERIAL IS INSTALLED SHALL NOT BE REVIEWED BY THE LANDSCAPE ARCHITECT/ENGINEER.
    19.6. CONTRACTOR WILL BE BACK CHARGED FOR COST OF ADDITIONAL SHOP DRAWING REVIEWS.
20. PRIOR TO INITIATION OF AN RFI, CAREFULLY STUDY ALL CONTRACT DOCUMENTS TO CONFIRM THAT THE INFORMATION SUFFICIENT FOR INTERPRETATION OR CLARIFICATION IS DEFINITELY NOT INCLUDED. INCLUDE IN EACH REQUEST CONTRACTOR'S SIGNATURE ATTESTING TO GOOD FAITH EFFORT TO DETERMINE FROM CONTRACT DOCUMENTS INFORMATION REQUIRING INTERPRETATION OR CLARIFICATION.
21. ANY IMPROPER OR FRIVOLOUS RFI'S WILL BE RETURNED WITHOUT A RESPONSE, WITH AN EXPLANATORY NOTATION.
    21.1. THE OWNER RESERVES THE RIGHT TO ASSESS THE CONTRACTOR FOR THE COSTS INCURRED BY THE ARCHITECT/ENGINEER, AND ANY OF ITS CONSULTANTS, DUE TO PROCESSING OF SUCH RFI'S.
22. WHERE ONE CONDITION IS SHOWN FOR A PLAN DETAIL, IT SHALL ALSO APPLY FOR ALL LIKE OR SIMILAR CONDITIONS UNLESS NOTED OTHERWISE.
23. MATERIALS STORAGE: STORE MATERIALS IN A MANNER TO ENSURE PROPER VENTILATION AND DRAINAGE. PROTECT AGAINST DAMAGE, WEATHER, VANDALISM, AND THEFT.
24. SHORING: PROVIDE ALL NECESSARY SHORING, SHEETING, AND BRACING FOR THE PROTECTION OF WORK AND SAFETY OF PERSONNEL. ENGAGE A GEORGIA REGISTERED PROFESSIONAL ENGINEER HIGHLY EXPERIENCED IN THE DESIGN OF SUCH SHORING AND BRACING SYSTEMS TO PERFORM THE DESIGN ENGINEERING FOR SAID SHORING AND BRACING. DO NOT BACKFILL OR LOAD WALLS AND STRUCTURAL SYSTEMS UNTIL SAID WALLS OR SYSTEMS ARE COMPLETELY DEVELOPED AND STRUCTURALLY SOUND.
    24.1. SUBMIT DETAILED SHOP DRAWINGS AND SCHEMATIC DIAGRAMS AS NECESSARY TO GRAPHICALLY DESCRIBE ALL SHORING AND BRACING PROCEDURES. INCLUDE CALCULATIONS AND SCHEDULES. ILLUSTRATE SEQUENCING OF ALL SHORING AND BRACING.
25. ALL THE RECORD DOCUMENT INFORMATION REQUIRED BY THE DEVELOPMENT INSPECTIONS PROJECT CLOSEOUT CHECKLIST FOR CITY OF DACULA PROJECTS SHALL BE INCLUDED IN THE CONTRACT WITH NO ADDITIONAL COST TO OWNER.
26. PROJECT RECORD DOCUMENTS REQUIRED INCLUDE THE FOLLOWING:
    26.1. MARKED-UP COPIES OF CONTRACT DRAWINGS.
    26.2. MARKED-UP COPIES OF SPECIFICATIONS, ADDENDA, AND CHANGE ORDERS.
    26.3. MARKED-UP COPIES OF SHOP DRAWINGS OF PRODUCT DATA SUBMITTALS AND RECORD SAMPLES.
    26.4. FIELD RECORDS FOR VARIABLE AND CONCEALED CONDITIONS.
    26.5. RECORDED INFORMATION ON WORK THAT IS DEPICTED ONLY SCHEMATICALLY ON DRAWINGS.
    26.6. RECORDED DRAWING SUB-SURFACE WATER QUALITY FACILITIES, I.E., "AS-BUILT" DRAWING.
    26.7. MARK THESE DRAWINGS TO SHOW THE ACTUAL INSTALLATION, WHERE THE INSTALLATION VARIES FROM THE INSTALLATION SHOWN ORIGINALLY. GIVE PARTICULAR ATTENTION TO INFORMATION ON CONCEALED ELEMENTS THAT WOULD BE DIFFICULT TO IDENTIFY OR MEASURE AND RECORD LATER.
    26.8. "AS-BUILT" HYDROLOGY ANALYSIS/REPORT.
27. CONTRACTOR SHALL EMPLOY THE SERVICES OF AN INDEPENDENT REGISTERED LAND SURVEYOR (R.L.S.) FOR THE "AS-BUILT" RECORD DRAWINGS. THE R.L.S. WILL HOLD ACTIVE LICENSURE AND REGISTRATION IN THE STATE OF GEORGIA.
28. TESTS AND INSPECTIONS NOT EXPLICITLY ASSIGNED TO OWNER ARE CONTRACTOR'S RESPONSIBILITY. PERFORM ADDITIONAL QUALITY-CONTROL ACTIVITIES REQUIRED TO VERIFY THAT THE WORK COMPLIES WITH REQUIREMENTS, WHETHER SPECIFIED OR NOT.
29. THE OWNER & OWNER'S REPRESENTATIVE WILL PERFORM ONE INSPECTION FOR SUBSTANTIAL COMPLETION, UPON THE REQUEST OF THE CONTRACTOR. ONLY ONE CERTIFICATE OF SUBSTANTIAL COMPLETION WILL BE ISSUED; THIS CERTIFICATE WILL INCLUDE ALL OF THE WORK AND NOT A PORTION OR PORTIONS.
30. PRIOR TO REQUESTING LANDSCAPE ARCHITECT/ENGINEER'S INSPECTION FOR CERTIFICATE OF SUBSTANTIAL COMPLETION:
    30.1. OBTAIN AND SUBMIT THE CERTIFICATE OF OCCUPANCY AND /OR CERTIFICATE OF COMPLETION AND ANY APPLICABLE OPERATING PERMITS FROM AUTHORITIES HAVING JURISDICTION.
    30.2. SUBMIT ALL SUBMITTALS SPECIFIED IN THE CONTRACT DOCUMENTS TO BE COMPLETED BEFORE SUBSTANTIAL COMPLETION.
31. PRIOR TO REQUESTING OWNER & OWNER'S REPRESENTATIVE 'S FINAL INSPECTION FOR CERTIFICATE OF FINAL COMPLETION AND FINAL PAYMENT, SUBMIT SPECIAL WARRANTIES, WORKMANSHIP BONDS, MAINTENANCE AGREEMENTS, FINAL CERTIFICATIONS AND SIMILAR DOCUMENTS REQUIRED BY CONTRACT DOCUMENTS OR RELATED TO INSTALLED EQUIPMENT AND MATERIALS.
32. THE OWNER & OWNER'S REPRESENTATIVE WILL PERFORM ONLY ONE INSPECTION FOR FINAL COMPLETION, UPON THE REQUEST OF THE CONTRACTOR. THE CONTRACTOR SHOULD TAKE CARE THAT ALL REQUIREMENTS FOR FINAL COMPLETION AS INDICATED IN THE SPECIFICATIONS HAVE BEEN COMPLETED PRIOR TO SUBMITTING HIS REQUEST. IF THE OWNER & OWNER'S REPRESENTATIVE IS UNABLE TO ISSUE THE CERTIFICATE FOR FINAL PAYMENT BECAUSE THE WORK IS NOT COMPLETE, THE CONTRACTOR SHALL PAY ALL SUBSEQUENT INSPECTION COSTS.

GWINNETT COUNTY DEPARTMENT OF WATER RESOURCES NOTES:

1. ALL WATER AND SEWER FACILITIES SHALL BE INSTALLED BY A LICENSED UTILITY CONTRACTOR IN THE STATE OF GEORGIA.
2. 12 GAUGE, SOLID STRAND DETECTION WIRE IS REQUIRED TO BE INSTALLED ABOVE ALL WATER LINES WITH WATERPROOF CONNECTORS AND CONNECTIONS AT EVERY VALVE AND HYDRANTS.
3. MARKING TAPE SHOWING "CAUTION BURIED WATERLINE" SHALL BE INSTALLED APPROXIMATELY 18-INCHES ABOVE ALL WATERLINES.
4. AS-BUILTS RECORD DRAWINGS (HARD COPIES AND DIGITAL FORMAT) FOR THIS PROJECT MUST BE SUBMITTED AND APPROVED BY GWINNETT COUNTY PRIOR TO FINAL ACCEPTANCE BY THE OWNER.
5. THE GWINNETT COUNTY WATER DEPARTMENT SHALL BE NOTIFIED A MINIMUM OF 48 HOURS (MONDAY THROUGH FRIDAY) PRIOR TO COMMENCING ANY WORK, TESTING, AND PRIOR TO MAKING ANY CONNECTIONS TO EXISTING WATERLINES.
6. THE GWINNETT COUNTY SEWER DEPARTMENT SHALL BE NOTIFIED A MINIMUM OF 48 HOURS (MONDAY THROUGH FRIDAY) PRIOR TO COMMENCING ANY WORK, TESTING, AND PRIOR TO MAKING ANY CONNECTIONS TO EXISTING SEWER LINES OR MANHOLES.
7. ALL WATER AND SEWER LINE CONSTRUCTION SHALL BE IN ACCORDANCE WITH GWINNETT COUNTY STANDARD SPECIFICATIONS AND DETAILS, LATEST EDITION.
8. FOR D.I.P. SEWER LINES, THE MINIMUM WALL THICKNESS SHALL BE CLASS 350 AND THE INTERIOR LINING
9. SHALL BE CEMENT. WALL THICKNESS GREATER THAN THE MINIMUM CALLED FOR ABOVE MAY BE REQUIRED
10. DUE TO GREATER DEPTHS OR VARYING BEDDING REQUIREMENTS. CLASS C BEDDING IS THE MINIMUM ALLOWED.
11. USE OF PRE-CAST INVERTS IS ACCEPTABLE PROVIDED INVERTS ARE NOT MODIFIED
12. ALL NEW PIPE TIE-INS REQUIRE NEW INVERTS IN MANHOLES (3.5.12F)
13. IN THE FIRST NEWLY INSTALLED MANHOLE UPSTREAM OF THE EXISTING TIE-IN MANHOLE, CONTRACTOR SHALL INSTALL TEMPORARY MECHANICAL PLUGS ON THE INFLOW AND OUTFLOW INVERTS. SAID MECHANICAL PLUGS SHALL BE TIED TO THE MANHOLE STEP WITH STEEL CABLE AND PADLOCKED TO PREVENT TAMPERING AND GCDWR SHALL INSTALL A LOCKING COVER. (SEE DETAIL S15).
14. PER THE FEE RESOLUTION THERE IS A "PENALTY FEE" OF 100% OF THE PERMIT FEE FOR SITE ACTIVITY PRIOR TO ISSUANCE OF APPROPRIATE PERMITS (LAND DISTURBANCE, DEVELOPMENT, OR UTILITY CONSTRUCTION)
15. INFORMATION REGARDING UNDERGROUND UTILITIES ON THESE PLANS IS NOT GUARANTEED AS TO ACCURACY OR COMPLETENESS. PRIOR TO BEGINNING WORK, THE CONTRACTOR SHALL REQUEST A FIELD LOCATION THROUGH THE UTILITIES PROTECTION CENTER AND ANY UTILITY OWNERS THOUGHT TO HAVE FACILITIES IN THE AREA. THE CONTRACTOR SHALL PROMPTLY COMPARE THESE FIELD-MARKED LOCATIONS WITH THE PROJECT PLANS AND THEN NOTIFY THE DESIGNER OF ANY ANTICIPATED PROBLEMS OR NEED FOR DESIGN CHANGES. IT IS THE CONTRACTOR'S RESPONSIBILITY TO EXCAVATE OR CAUSE THE UTILITY OWNER TO EXCAVATE FOR THE PURPOSE OF DETERMINING EXACT ELEVATIONS OR LOCATIONS AT UTILITY CROSSINGS AND OTHER CRITICAL LOCATIONS WELL IN ADVANCE OF THE WORK UNDER THIS CONTRACT.
16. DAMAGE TO EXISTING UTILITIES RESULTING FROM THE CONTRACTOR'S NEGLIGENCE SHALL BE REPAIRED AT THE CONTRACTOR'S EXPENSE. THE DEVELOPER AND/OR THE DEVELOPER'S CONTRACTOR IS RESPONSIBLE FOR VERIFYING THE EXACT LOCATION, SIZE, AND MATERIAL OF ANY EXISTING WATER OR SANITARY SEWER FACILITY PROPOSED FOR CONNECTION OR USE BY THIS PROJECT.
17. ALL CUT AND FILL SLOPES MUST BE ROUGHENED AND VEGETATED WITHIN SEVEN (7) DAYS OF THEIR CONSTRUCTION.
18. BORE WITHIN THE VICINITY OF THE MANHOLE AND CORE FROM THE INSIDE OF THE MANHOLE IN THE PRESENCE OF AN INSPECTOR
19. TAP TO BE PERFORMED ONLY BY GCDWR TO SCHEDULE CALL 678-376-7029 72 HOURS IN ADVANCE. CONTRACTOR IS RESPONSIBLE FOR ALL EXCAVATION AND BACKFILL MATERIAL. EXCAVATION AREA MUST MEET OR EXCEED OSHA STANDARDS AND BE READY PRIOR TO SCHEDULED TIME FOR COUNTY FORCES TO ARRIVE AND PERFORM TAP.
20. A CONSTRUCTION PERMIT IS TO BE ACQUIRED BY A GCDWR APPROVED CONTRACTOR PRIOR TO INSTALLATION. CALL 678-518-6000 FOR INFORMATION AND COPY OF APPROVED CONTRACTOR'S LIST. A MANDATORY PRE-CONSTRUCTION CONFERENCE WITH INSPECTOR, BY APPOINTMENT ONLY, IS REQUIRED 48 HOURS PRIOR TO ANY UTILITY CONSTRUCTION. ANY UTILITY DESIGN CHANGES MUST BE APPROVED BY THE WATER AND SEWER REVIEW SECTION OF P&d PRIOR TO INSTALLATION.
21. AS-BUILT/RECORD DRAWINGS FOR SEWER SYSTEM REQUIRED PRIOR TO REQUESTING FINAL PLAT APPROVAL, TEMPORARY CERTIFICATE OF OCCUPANCY OR ISSUANCE OF CERTIFICATE OF OCCUPANCY. ALLOW MINIMUM 10 BUSINESS DAYS FOR INITIAL REVIEW AND ADDITIONAL TIME FOR RE-REVIEW(S). DRAWINGS TO BE SUBMITTED TO, REVIEWED AND APPROVED BY DEPARTMENT OF WATER RESOURCES.
22. ALL WORK TO BE PERFORMED ACCORDING TO GWINNETT COUNTY DEPARTMENT OF WATER RESOURCES - WATER MAIN AND SANITARY SEWER DESIGN AND CONSTRUCTION STANDARDS AND SPECIFICATIONS (APRIL 5, 2016). ACTUAL FIELD CONDITIONS COULD DICTATE MORE STRINGENT REQUIREMENTS, IF DEEMED NECESSARY BY INSPECTOR.
23. GCDWR DOES NOT AUTHORIZE ANY PAVEMENT CUTS - IF CUT IS NECESSARY PERMISSION MUST BE OBTAINED FORM THE OWNER OF STREET.
24. MAINTAIN 10' SEPARATION BETWEEN WATER AND SEWER LINES.
25. TREATMENT OF REMAINING GROUND SHALL BE SOD, SEEDED OR HYDRO SEEDED WITH GRASS, AND/OR PLANTED WITH GROUND COVER SPECIES AND/OR PROVIDED WITH OTHER LANDSCAPING MATERIAL, OR ANY COMBINATION THEREOF.

GCDOT NOTE:

THE GENERAL CONTRACTOR IS RESPONSIBLE FOR ALL COSTS ASSOCIATED WITH ANY RELOCATION OR DAMAGE TO GWINNETT COUNTY DOT (GCDOT) TRAFFIC SIGNAL OR ATMS INFRASTRUCTURE (LOOP, LEAD-IN, FIBER OPTICS, CONDUIT, PULL BOX, ETC.) DUE TO CONSRUCTION ACTIVITIES AND MUST USE A GCDOT APPROVED CONTRACTOR TO PERFORM ANY WORK ON SAID INFRASTRUCTIRE. NOTIFY GCDOT AT 678-639-8800 OF ANY ACTIVITY.

TRAFFIC SIGNAGE NOTE:

ALL TRAFFIC CONTROL SIGNS THAT ARE REMOVED OR DAMAGES SHALL BE REINSTALLED OR REPLACED. SIGNS MUST BE REINSTALLED TO THE STANDARDS IN THE MANUAL UNIFORM TRAFFIC CONTROL DEVICES (MUTCD).

GWINNETT COUNTY FIRE NOTES:

1. PLACEMENT OF FIRE HYDRANTS SHALL BE A MINIMUM OF 3 FT. AND A MAXIMUM OF 15 FT. FROM THE BACK OF CURB OR ROAD EDGE WITH THE LARGE FIRE DEPARTMENT CONNECTION FACING THE NEAREST FIRE DEPARTMENT ACCESS POINT AND SET A MINIMUM OF 18" AND A MAXIMUM OF 36" ABOVE FINISHED GRADE T TO THE CENTER OF THE LARGE FIRE DEPARTMENT CONNECTION. AUTHORITY HAVING JURISDICTION.
2. (GROUND AND FLOOR SURFACES) ALONG ACCESSIBLE ROUTES AND WALKS, RAMPS, STAIRS AND CURBS RAMPS, SHALL BE STABLE, FIRM, SLIP-RESISTANT AND SHALL COMPLY WITH RULE 120-3-20-.1&&19.
3. (FIRE HYDRANTS AND WATER MAINS) ARE TO BE INSTALLED, FLUSHED, AND UNDER PRESSURE BEFORE ANY COMBUSTIBLE CONSTRUCTION IS STARTED. GWINNETT COUNTY ORDINANCE FOR FIRE PROTECTION AND LIFE SAFETY, SECTION 46-38(a).
4. FIRE HYDRANT SPACING IN INDUSTRIAL & COMMERCIAL DEVELOPMENTS. ADDITIONAL HYDRANTS MAY BE REQUIRED TO PERMIT ALL PORTIONS, OF ALL BUILDINGS, TO BE REACHED BY HOSE LAYS NOT TO EXCEED 400 FT BY ROAD TRAVEL. GWINNETT COUNTY ORDINANCE FOR FIRE PROTECTION AND LIFE SAFETY, SECTION 46-37 (C).
5. DURING CONSTRUCTION AND FOR PERMANENT ACCESS, ROADWAYS CONSTRUCTED OF AN ALL WEATHER SURFACE CAPABLE OF SUPPORTING 75,000 POUNDS GROSS WEIGHT SHALL BE PROVIDED PER INTERNATIONAL FIRE CODE, CHAPTER 5, SECTION 503.2.3, 2006 EDITION.

PLANTS AND LANDSCAPING NOTES:

1. CONTRACTOR IS RESPONSIBLE FOR ALL MEANS, METHODS, LABOR, MATERIALS, AND EQUIPMENT REQUIRED BY OR INDICATED BY THE DRAWINGS AND SPECIFICATIONS TO SATISFACTORILY COMPLETE THE CONSTRUCTION OF THE PROJECT INCLUDING ALL LANDSCAPE AND PLANTING WORK.
2. BEFORE COMMENCING ANY WORK, THE CONTRACTOR SHALL LOCATE ALL UTILITIES, SUBSURFACE DRAINAGE, AND UNDERGROUND CONSTRUCTION SO THAT PROPER PRECAUTIONS MAY BE TAKEN NOT TO DISTURB OR DAMAGE ANY SUBSURFACE IMPROVEMENTS. CONTRACTOR SHALL BE HELD RESPONSIBLE FOR MAKING ALL REPAIRS, AT HIS OWN EXPENSE TO DAMAGED UTILITIES RESULTING FROM THE WORK.
3. SELECTION OF ALL MATERIALS AND THE EXECUTION OF ALL OPERATIONS REQUIRED SHALL BE SUBJECT TO THE APPROVAL OF THE LANDSCAPE ARCHITECT, WHO SHALL HAVE THE RIGHT TO REJECT ANY AND ALL MATERIALS AND ANY AND ALL WORK WHICH, IN THEIR OPINION, DOES NOT MEET THE REQUIREMENTS OF THE DRAWINGS AND SPECIFICATIONS.
4. ANY DEVIATION FROM THE DRAWINGS AND SPECIFICATIONS MUST BE SUBMITTED IN WRITING BY CONTRACTOR TO LANDSCAPE ARCHITECT FOR APPROVAL PRIOR TO ANY WORK TAKING PLACE.
5. CONTRACTOR MUST PROVIDE PLANTS THAT MEET ALL REQUIREMENTS INCLUDING HEIGHT AND SPREAD, REGARDLESS OF SPECIFIED CALIPER OR CONTAINER SIZE. SUBSTITUTIONS MUST BE APPROVED BY ADDENDUM PRIOR TO BID AND APPROVED BY ARBORIST PRIOR TO PLANTING. TREE CALIPER TO BE VERIFIED PRIOR TO PLANTING. UNDERSIZED PLANTS MAY BE REJECTED BY THE OWNER, THE OWNER'S REPRESENTATIVE AND / OR THE LOCAL ISSUING AUTHORITY.
6. TOPPING TREES IS NOT ALLOWED. TREES REMOVED OR HAVING THEIR TOPS CUT AFTER COMPLIANCE WITH THIS ORDINANCE SHALL BE REPLACED WITH THE EQUIVALENT INCHES OF REMOVED TREES.
7. ALL BUFFERS AND TREE SAVE AREAS ARE TO BE CLEARLY IDENTIFIED WITH PROTECTIVE FENCING PRIOR TO COMMENCEMENT OF ANY LAND DISTURBANCE.

GEORGIA811
www.Georgia811.com

Bowman

Certificate of Authorization License No. LSF001241

Bowman Consulting Group Ltd
4174 Silver Peak Parkway
Suwanee, GA 30024
Phone: (770) 932-6550
www.bowman.com

© 2021 Bowman Consulting Group Ltd

GENERAL NOTES
2025 CDBG FOR CITY OF DACULA
SANJO STREET WIDENING, PAVING, DRAINAGE, AND SIDEWALK IMPROVEMENTS PROJECT
CITY OF DACULA, GA
GWINNETT COUNTY

CONSULTANT PROJECT # 200577-01-001

GEORGIA REGISTERED PROFESSIONAL ENGINEER PE042997 LUONG Q. DANG
11/21/25

PLAN STATUS	
11/21/2025	BID SET
DATE	DESCRIPTION

KDW	RWH	SAD
DESIGN	DRAWN	CHKD

SCALE .
JOB No. 24-204(200577-01-001)
DATE : 11/14/2025
FILE No.
SHEET No. C001

November 21, 2025
File Path:V:\200523_City of Dacula\200523-01-001 (ENG) - Administrative Building\Engineering\Engineering Plans\SANJO SHEETS\200577-01-D SANJO C000 COV.dwg
THIS DOCUMENT, TOGETHER WITH THE CONCEPTS AND DESIGNS PRESENTED HEREIN, IS AN INSTRUMENT OF SERVICE, IS INTENDED ONLY FOR THE SPECIFIC PURPOSE AND CLIENT FOR WHICH IT WAS PREPARED. REUSE OF AND IMPROPER RELIANCE ON THIS DOCUMENT WITHOUT WRITTEN AUTHORIZATION AND ADAPTATION BY BOWMAN CONSULTING SHALL BE WITHOUT LIABILITY TO BOWMAN CONSULTING.

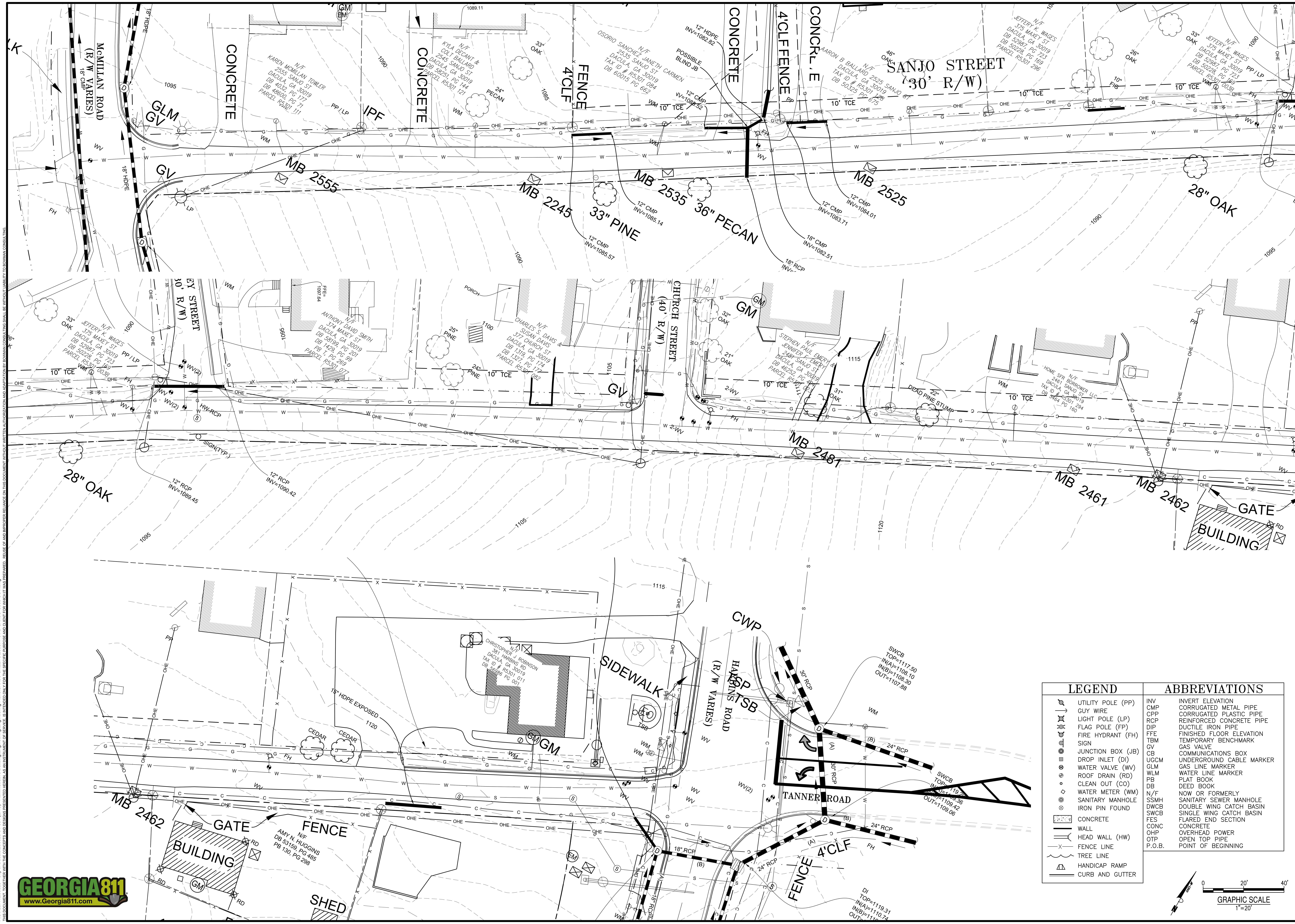

LEGEND
UTILITY POLE (PP)
GUY WIRE
LIGHT POLE (LP)
FLAG POLE (FP)
FIRE HYDRANT (FH)
SIGN
JUNCTION BOX (JB)
DROP INLET (DI)
WATER VALVE (WV)
ROOF DRAIN (RD)
CLEAN OUT (CO)
WATER METER (WM)
SANITARY MANHOLE
IRON PIN FOUND
CONCRETE
WALL
HEAD WALL (HW)
FENCE LINE
TREE LINE
HANDICAP RAMP
CURB AND GUTTER

ABBREVIATIONS	
INV	INVERT ELEVATION
CMP	CORRUGATED METAL PIPE
CPP	CORRUGATED PLASTIC PIPE
RCP	REINFORCED CONCRETE PIPE
DIP	DUCTILE IRON PIPE
FFE	FINISHED FLOOR ELEVATION
TBM	TEMPORARY BENCHMARK
GV	GAS VALVE
CB	COMMUNICATIONS BOX
UGCM	UNDERGROUND CABLE MARKER
GLM	GAS LINE MARKER
WLM	WATER LINE MARKER
PB	PLAT BOOK
DB	DEED BOOK
N/F	NOW OR FORMERLY
SSMH	SANITARY SEWER MANHOLE
DWCB	DOUBLE WING CATCH BASIN
SWCB	SINGLE WING CATCH BASIN
FES	FLARED END SECTION
CONC	CONCRETE
OHP	OVERHEAD POWER
OTP	OPEN TOP PIPE
P.O.B.	POINT OF BEGINNING

GA83-WF

GRAPHIC SCALE 0 20' 40'
1"=20'

GEORGIA811 www.Georgia811.com

Bowman

Certificate of Authorization License No. LSF001241

Bowman Consulting Group Ltd
4174 Silver Peak Parkway
Suwanee, GA 30024
Phone: (770) 932-6550
www.bowman.com

© 2021 Bowman Consulting Group Ltd

EXISTING CONDITIONS
2025 CDBG FOR CITY OF DACULA
SANJO STREET WIDENING, PAVING, DRAINAGE, AND SIDEWALK IMPROVEMENTS PROJECT
CITY OF DACULA, GA
GWINNETT COUNTY

CONSULTANT PROJECT #
200577-01-001

GEORGIA REGISTERED PROFESSIONAL ENGINEER PE042537 VUONG Q. DANG 11/21/25

PLAN STATUS	
11/21/2025	BID SET
DATE	DESCRIPTION

KDW	RWH	SAD
DESIGN	DRAWN	CHKD

SCALE .

JOB No. 24-204(200577-01-001)

DATE : 11/14/2025

FILE No.

SHEET No. C002

November 21, 2025

File Path:V:\200523 - City of Dacula\200523-01-001 (ENG) - Administrative Building\Engineering\Engineering Plans\SANJO SHEETS\200577-01-D SANJO C000 COV.dwg

THIS DOCUMENT, TOGETHER WITH THE CONCEPTS AND DESIGNS PRESENTED HEREIN, AS AN INSTRUMENT OF SERVICE, IS INTENDED ONLY FOR THE SPECIFIC PURPOSE AND CLIENT FOR WHICH IT WAS PREPARED. REUSE OF AND IMPROPER RELIANCE ON THIS DOCUMENT WITHOUT WRITTEN AUTHORIZATION AND ADAPTATION BY BOWMAN CONSULTING SHALL BE WITHOUT LIABILITY TO BOWMAN CONSULTING.

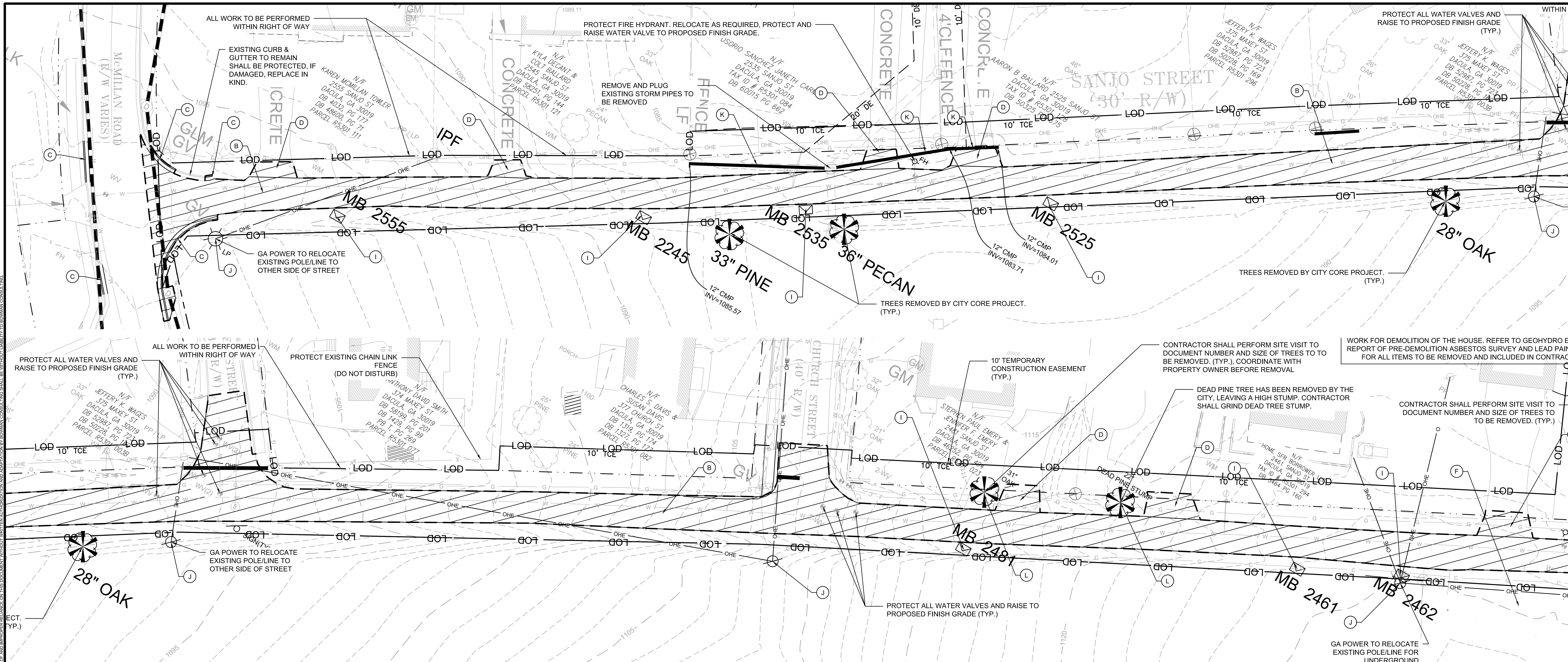

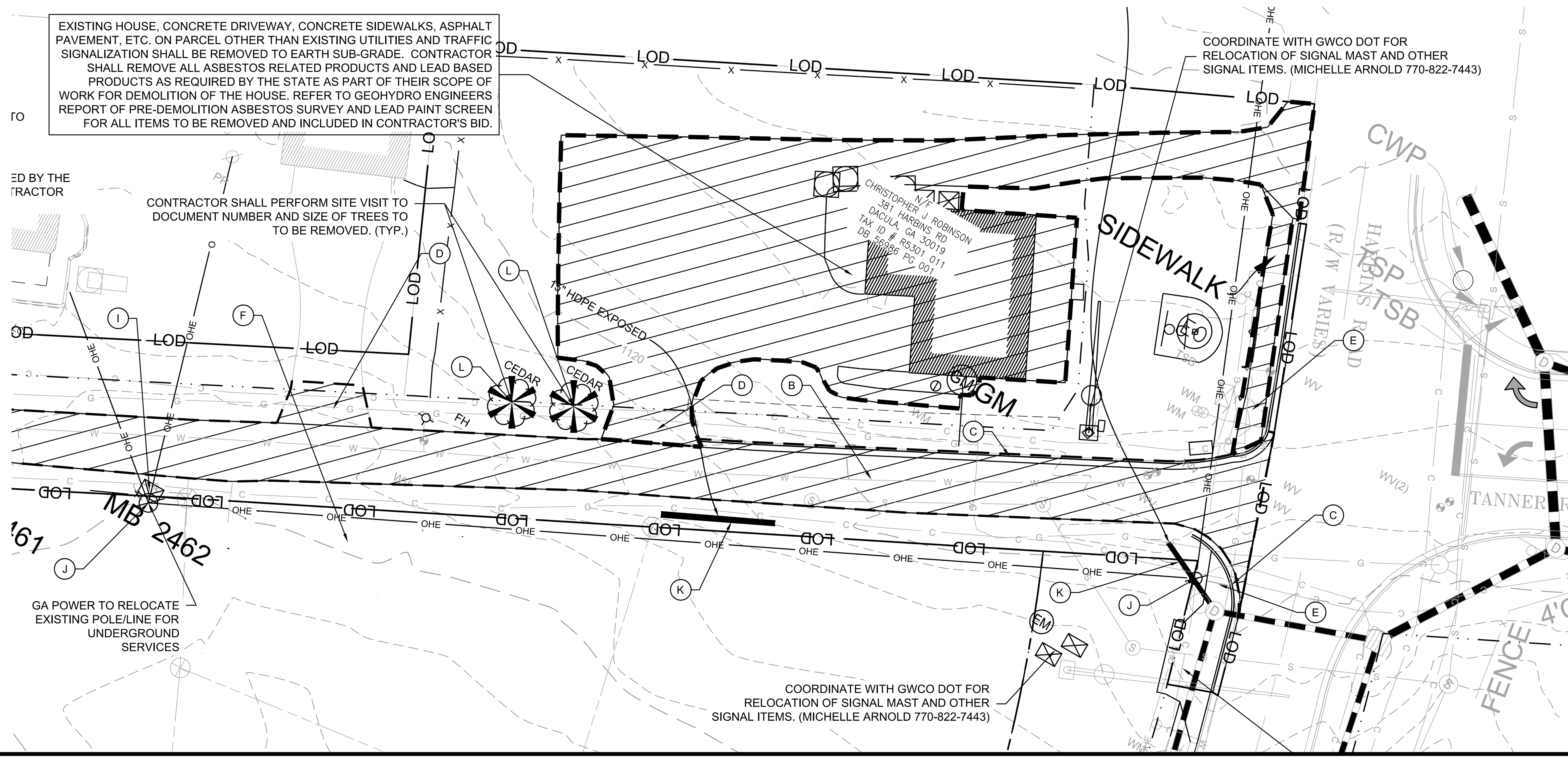

GEORGIA811
www.Georgia811.com

SITE NOTES:

1. BECOME THOROUGHLY FAMILIAR WITH ALL EXISTING CONDITIONS AT THE PROJECT SITE BY ON-SITE VISITATION AND INSPECTION, REVIEW ALL PLANS, SPECIFICATIONS, FEDERAL, STATE AND COUNTY REGULATIONS AND ORDINANCES TO FULLY ASCERTAIN THE SCOPE OF THE WORK ILLUSTRATED AND/OR IMPLIED WITHIN THESE PLANS.
2. COMPLY WITH ALL UTILITIES PROTECTION CENTER REQUIREMENTS. (SEE #4 BELOW)
3. SURVEY AND ESTABLISH ALL TOPOGRAPHIC BENCHMARKS, BOUNDARY MONUMENTATION, BUILT ITEMS AND EXISTING UTILITIES PERTAINING TO THE WORK SHOWN OR IMPLIED WITHIN THESE PLANS AND MAINTAIN SAID LOCATIONS THROUGHOUT THE DURATION OF THE PROJECT.
4. THE PROJECT EXISTING UTILITIES SHOWN HERE HAVE BEEN LOCATED IN AN APPROXIMATE WAY.
   - MARK ALL UTILITIES SHALL CONTACT THE UTILITY PROTECTION CENTER AT (1-800-282-7411);
   - VERIFY THE HORIZONTAL AND VERTICAL LOCATION OF ALL UTILITIES;
   - PROTECT ALL UTILITIES FROM DAMAGE OR INTERRUPTION;
   - REPAIR ANY AND ALL DAMAGES THAT OCCUR DUE TO FAILURE TO VERIFY THE LOCATION OR PROTECT UTILITIES.
5. THE OWNER & DESIGN PROFESSIONAL / LAND SURVEYOR DO NOT GUARANTEE THAT ALL EXISTING UTILITIES ARE ILLUSTRATED ON THESE PLANS. THE CONTRACTOR SHALL LOCATE AND VERIFY ALL HORIZONTAL AND VERTICAL LOCATIONS OF EXISTING UTILITIES.
6. PROTECT ALL UTILITIES FROM DAMAGE THROUGHOUT THE DURATION OF THE PROJECT AND REPAIR ANY AND ALL DAMAGE TO EXISTING UTILITIES CAUSED BY CONSTRUCTION OPERATIONS. REROUTE, RELOCATE AND/OR MODIFY ANY EXISTING UTILITIES THAT APPEAR ON THE REFERENCE SURVEY (ROADS, ACCESSWAYS, DRAINAGE WAYS, ETC.) IN ORDER TO MAINTAIN THE FUNCTION OF SAID FACILITIES.
7. PROVIDE ALL TEMPORARY TRAFFIC SAFETY DEVICES INCLUDING BUT NOT LIMITED TO BARRICADES, SIGNAGE, SIGNAL LIGHTS OR FLAGMEN TO PROTECT THE PUBLIC AT LARGE, AND CONSTRUCTION PERSONNEL WHILE OPERATING WITHIN PUBLIC STREETS AND / OR RIGHTS-OF-WAY.
8. ERECT AND MAINTAIN ALL SOIL EROSION CONTROL MEASURES PRIOR TO DEMOLITION OPERATIONS AND PROTECT ALL ADJACENT PROPERTIES REGARDLESS OF OWNERSHIP.
9. ALL EXISTING PIPING THAT IS TO BE DEMOLISHED WILL BE DEMOLISHED AND REMOVED TO EARTH SUB-GRADE. MATERIAL IS TO BE DISPOSED OF LEGALLY OFF-SITE.
10. ALL BUFFERS AND TREE SAVE AREAS ARE TO BE CLEARLY IDENTIFIED WITH FLAGGING AND / OR FENCING PRIOR TO COMMENCEMENT OF ANY LAND DISTURBANCE.
11. REMOVE ALL MISCELLANEOUS DEBRIS FROM THE SITE. THAT ARE DESIGNATED TO BE REMOVED BY THE CITY OF DACULA AND THE DESIGN ENGINEER OR AS DIRECTED IN THE CONSTRUCTION DOCUMENTS.
12. SAW-CUT SMOOTH LINE BETWEEN PORTIONS OF CURB AND GUTTER TO BE DEMOLISHED AND REMOVED AND REMAINING PORTIONS.
13. DO NOT PUT ANY EQUIPMENT, MATERIALS, OR DEBRIS ON ANY ADJACENT PROPERTY.
14. CLEAR AND GRUB EXISTING VEGETATION WITHIN THE LIMITS OF DISTURBANCE EXCEPT THE AREAS WITHIN A DESIGNATED TREE SAVE AREA. SEE SHEET C1.0 DEMOLITION PLAN FOR TREE FENCE LOCATION.
15. DO NOT BURY ANY CLEARING AND GRUBBING DEBRIS AND / OR DEMOLITION DEBRIS ON-SITE.
16. BURNING ON-SITE IS NOT PERMITTED.
17. CONTRACTOR TO COORDINATE WITH CITY CORE CONTRACTOR FOR RELOCATION OF CONSTRUCTION FENCING ADJACENT TO SANJO STREET WIDENING PROJECT.
18. CONTRACTOR IS RESPONSIBLE FOR RELOCATING CITY CORE SILT FENCE ADJACENT TO SANJO STREET WIDENING PROJECT AS PART OF THE SCOPE OF WORK. CONTRACTOR SHALL COORDINATE WITH CIT CORE CONTRACTOR ON SUITABLE LOCATION.

LEGEND

SYMBOL	DESCRIPTION
*	CLEAR & GRUB EXISTING TREES & PLANTING WITHIN THE LIMITS SHOWN
(A)	DEMOLISH AND REMOVE TO EARTH SUB-GRADE EXISTING STRUCTURES
(B)	DEMOLISH AND REMOVE TO EARTH SUB-GRADE EXISTING ASPHALT PAVEMENT
(C)	DEMOLISH AND REMOVE TO EARTH SUB-GRADE EXISTING CONCRETE CURB & GUTTER
(D)	DEMOLISH AND REMOVE TO EARTH SUB-GRADE EXISTING DRIVEWAY APRON
(E)	DEMOLISH AND REMOVE TO EARTH SUB-GRADE EXISTING CONCRETE SIDEWALK
(F)	DEMOLISH AND REMOVE EXISTING FENCE & GATE
(G)	DEMOLISH AND REMOVE TO EARTH SUB-GRADE EXISTING WALLS
(H)	DEMOLISH AND REMOVE TO EARTH SUB-GRADE EXISTING DRIVEWAY
(I)	REMOVE AND RELOCATE EXISTING MAILBOX TO THE SIDE OF THE STREET WHERE THE PROPERTY RESIDES, CONTRACTOR TO COORDINATE WITH POST OFFICE
(J)	EXISTING POWER POLE / LIGHT POLE TO BE RELOCATED BY GEORGIA POWER, CONTRACTOR TO COORDINATE WITH UTILITY OWNER
(K)	REMOVE EXISTING STORM STRUCTURE & STORM PIPE
(L)	CLEAR & GRUB EXISTING TREE, GRIND STUMP.

GRAPHIC SCALE
1"=20'
0 20' 40'

24 HOUR CONTACT
CITY OF DACULA
BRITTNI NIX
BRITTNIX@DACULAGA.GOV
770-963-7451

Bowman

Bowman Consulting Group Ltd
4174 Silver Peak Parkway
Suwanee, GA 30024
Phone: (770) 932-6550
www.bowman.com

© 2021 Bowman Consulting Group Ltd

DEMOLITION PLAN
2025 CDBG FOR CITY OF DACULA
SANJO STREET WIDENING, PAVING, DRAINAGE, AND SIDEWALK IMPROVEMENTS PROJECT
CITY OF DACULA, GA
GWINNETT COUNTY

CONSULTANT PROJECT #
200577-01-001

GEORGIA REGISTERED PROFESSIONAL ENGINEER PE042037 VUONG Q. DANG 11/21/25

LEVEL II E&S CERT.#90012
EXP. DATE 12/19/2028

PLAN STATUS	
11/21/2025	BID SET
DATE	DESCRIPTION

KDW	RWH	SAD
DESIGN	DRAWN	CHKD

SCALE .
JOB No. 24-204(200577-01-001)
DATE : 11/14/2025
FILE No.
SHEET No. C100

November 21, 2025

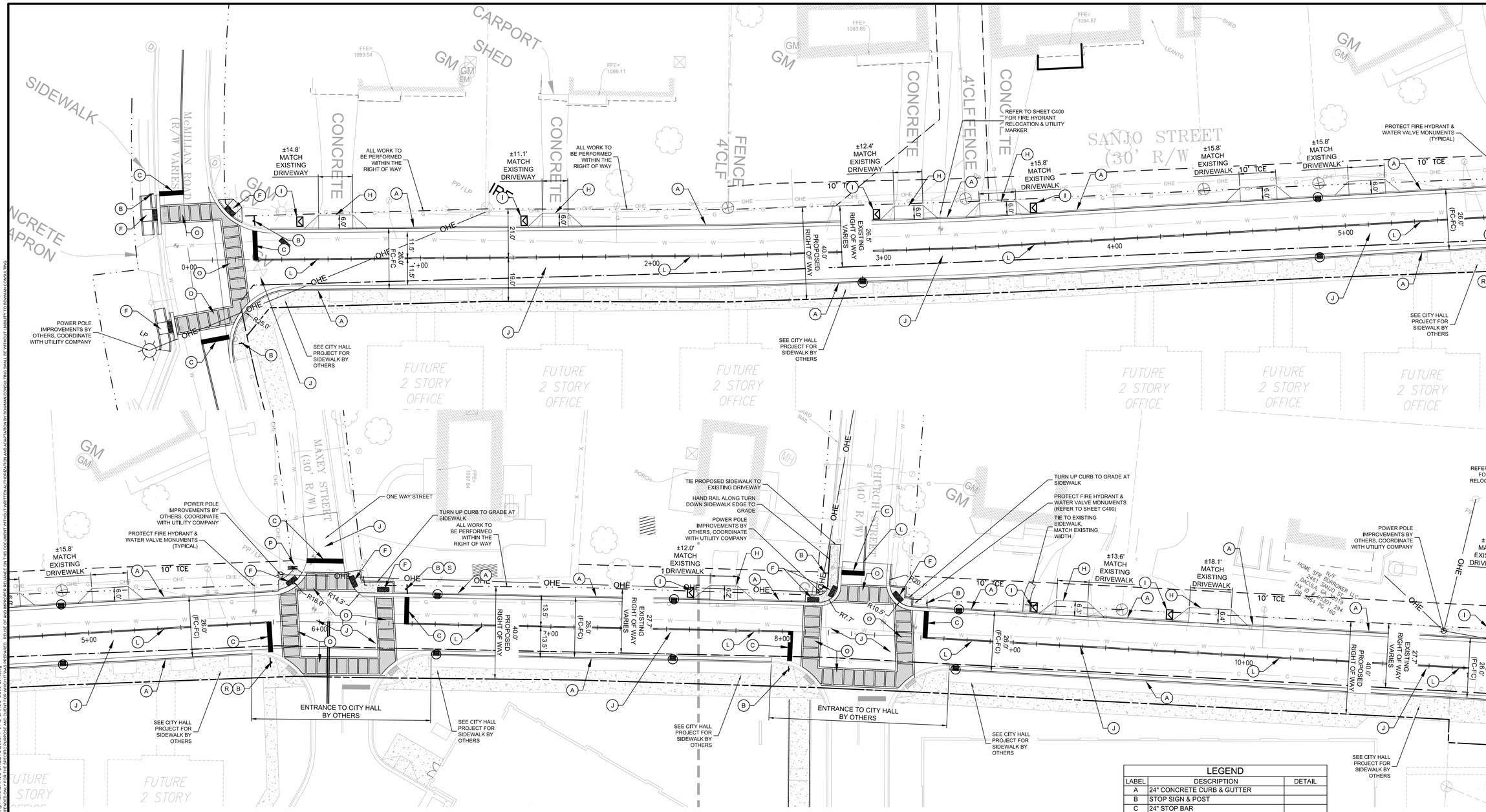

LEGEND		
LABEL	DESCRIPTION	DETAIL
A	24" CONCRETE CURB & GUTTER	
B	STOP SIGN & POST	
C	24" STOP BAR	
D	STOP FOR PEDESTRIAN SIGN & POST	
E	GA-DOT STANDARD CROSSWALK TRAFFIC MARKING	
F	ADA CURB RAMP WITH DET. STRIP	
G	30" DOT STANDARD CONCRETE CURB & GUTTER	
H	CONCRETE DRIVEWAY APRON	
I	MAIL BOX, COORDINATE WITH POST OFFICE FOR RELOCATION.	
J	HEAVY DUTY ASPHALT PAVEMENT	
K	CONCRETE SIDEWALK	
L	GADOT DOUBLE YELLOW CENTERLINE	
M	GADOT 4" SOLID WHITE LINE	
N	GADOT 4" SKIP WHITE LINE	
O	VEHICULAR PAVER CROSSWALK	
P	STOP SIGN AND POST WITH "DO NOT ENTER" SIGN ON BACK	
R	NO LEFT TURN SIGN BELOW STOP SIGN ON POST	
S	NO RIGHT TURN SIGN BELOW STOP SIGN ON POST	

GRAPHIC SCALE 1"=20' (0, 20', 40')

24 HOUR CONTACT
CITY OF DACULA
BRITTNI NIX
BRITTNI.NIX@DACULAGA.GOV
770-963-7451

GEORGIA811 www.Georgia811.com

Bowman
Certificate of Authorization License No. LSF001241

Bowman Consulting Group Ltd
4174 Silver Peak Parkway
Suwanee, GA 30024
Phone: (770) 932-6550
www.bowman.com
© 2021 Bowman Consulting Group Ltd.

SANJO STREET ROAD PLAN
2025 CDBG FOR CITY OF DACULA
SANJO STREET WIDENING, PAVING, DRAINAGE, AND SIDEWALK IMPROVEMENTS PROJECT
CITY OF DACULA, GA — GWINNETT COUNTY

CONSULTANT PROJECT # 200577-01-001

GEORGIA REGISTERED PROFESSIONAL ENGINEER VUONG G. DANG 11/21/25

PLAN STATUS	
11/21/2025	BID SET

DATE	DESCRIPTION

KDW	RWH	SAD
DESIGN	DRAWN	CHKD

SCALE .
JOB No. 24-204(200577-01-001)
DATE : 11/14/2025
FILE No.
SHEET No. C200

November 21, 2025
File Path:V:\200523 - City of Dacula\200523-01-001 (ENG) - Administrative Building\Engineering\Engineering Plans\SANJO SHEETS\200577-01-D SANJO C200 SIT.dwg

THIS DOCUMENT, TOGETHER WITH THE CONCEPTS AND DESIGNS PRESENTED HEREIN, IS AN INSTRUMENT OF SERVICE. IS INTENDED ONLY FOR THE SPECIFIC PURPOSE AND CLIENT FOR WHICH IT WAS PREPARED. REUSE OF AND RELIANCE ON THIS DOCUMENT WITHOUT WRITTEN AUTHORIZATION AND ADAPTATION BY BOWMAN CONSULTING SHALL BE WITHOUT LIABILITY TO BOWMAN CONSULTING.

LEGEND		
LABEL	DESCRIPTION	DETAIL
A	24" CONCRETE CURB & GUTTER	
B	STOP SIGN & POST	
C	24" STOP BAR	
D	STOP FOR PEDESTRIAN SIGN & POST	
E	GA-DOT STANDARD CROSSWALK TRAFFIC MARKING	
F	ADA CURB RAMP WITH DET. STRIP	
G	30" DOT STANDARD CONCRETE CURB & GUTTER	
H	CONCRETE DRIVEWAY APRON	
I	MAIL BOX, COORDINATE WITH POST OFFICE FOR RELOCATION.	
J	HEAVY DUTY ASPHALT PAVEMENT	
K	CONCRETE SIDEWALK	
L	GADOT DOUBLE YELLOW CENTERLINE	
M	GADOT 4" SOLID WHITE LINE	
N	GADOT 4" SKIP WHITE LINE	
O	VEHICULAR PAVER CROSSWALK	
P	STOP SIGN AND POST WITH "DO NOT ENTER" SIGN ON BACK	
R	NO LEFT TURN SIGN BELOW STOP SIGN ON POST	
S	NO RIGHT TURN SIGN BELOW STOP SIGN ON POST	

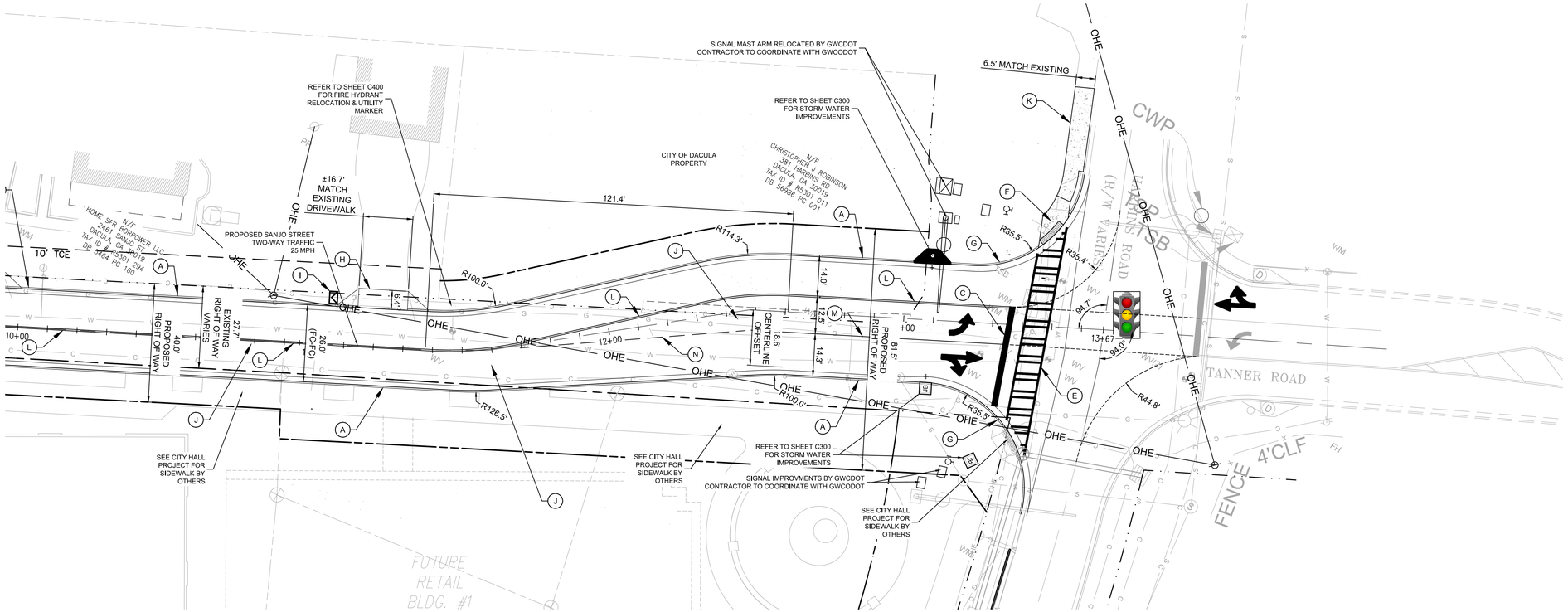

INTERSECTION CONSTRUCTION PLAN

SCALE: 1" = 20'

GEORGIA811 www.Georgia811.com

GRAPHIC SCALE 1"=10' (0, 10', 20')

24 HOUR CONTACT
CITY OF DACULA
BRITTNI NIX
BRITTNI.NIX@DACULAGA.GOV
770-963-7451

Bowman
Certificate of Authorization License No. LSF001241

Bowman Consulting Group Ltd
4174 Silver Peak Parkway
Suwanee, GA 30024
Phone: (770) 932-6550
www.bowman.com

© 2021 Bowman Consulting Group Ltd

SANJO & TANNER INTERSECTION PLAN
2025 CDBG FOR CITY OF DACULA
SANJO STREET WIDENING, PAVING, DRAINAGE, AND SIDEWALK IMPROVEMENTS PROJECT
GWINNETT COUNTY
CITY OF DACULA, GA

CONSULTANT PROJECT # 200577-01-001

GEORGIA REGISTERED PROFESSIONAL ENGINEER PE042087 VUONG G. DANG 11/21/25

PLAN STATUS	
11/21/2025	BID SET

DATE	DESCRIPTION	
KDW DESIGN	RWH DRAWN	SAD CHKD

SCALE .
JOB No. 24-204(200577-01-001)
DATE : 11/14/2025
FILE No.
SHEET No. C201

November 21, 2025
File Path:V:\200523_City of Dacula\200523-01-001 (ENG) - Administrative Building\Engineering\Engineering Plans\SANJO SHEETS\200577-01-D SANJO C200 SIT.dwg

THIS DOCUMENT, TOGETHER WITH THE CONCEPTS AND DESIGNS PRESENTED HEREIN, IS AN INSTRUMENT OF SERVICE, IS INTENDED ONLY FOR THE SPECIFIC PURPOSE AND CLIENT FOR WHICH IT WAS PREPARED. REUSE OF AND IMPROPER RELIANCE ON THIS DOCUMENT WITHOUT WRITTEN AUTHORIZATION AND ADAPTATION BY BOWMAN CONSULTING SHALL BE WITHOUT LIABILITY TO BOWMAN CONSULTING.

EXISTING STORM STRUCTURE 1-F
CONTRACTOR TO REMOVE TEMPORARY 12" HDPE DRIVEWAY CULVERT PIPE AND PLUG STRUCTURE WHERE PIPE WAS REMOVED

STORM LINE FROM STRUCTURE 1-A TO 1-G ARE N.I.C. INSTALLED UNDER ADMINISTRATION BUILDING COMPLEX PROJECT, TIE PROPOSED STORM PIPE TO EXISTING STRUCTURE

REMOVE EXISTING 12" DRIVEWAY CULVERT TO STRUCTURE 1-F

THERE IS NO TEMPORARY CONSTRUCTION EASEMENT. ALL WORK TO BE PERFORMED WITHIN RIGHT OF WAY

REMOVE EXISTING 12" DRIVEWAY CULVERT TO STRUCTURE 1-F

THERE IS NO TEMPORARY CONSTRUCTION EASEMENT. ALL WORK TO BE PERFORMED WITHIN RIGHT OF WAY

ENTRANCE TO CITY HALL BY OTHERS

ENTRANCE TO CITY HALL BY OTHERS

GEORGIA811
www.Georgia811.com

24 HOUR CONTACT
CITY OF DACULA
BRITTNI NIX
BRITTNI.NIX@DACULAGA.GOV
770-963-7451

GRAPHIC SCALE
1"=20'

Bowman
Certificate of Authorization License No. LSF001241

Bowman Consulting Group Ltd
4174 Silver Peak Parkway
Suwanee, GA 30024
Phone: (770) 932-6550
www.bowman.com

© 2021 Bowman Consulting Group Ltd

GRADING AND DRAINAGE PLAN
2025 CDBG FOR CITY OF DACULA
SANJO STREET WIDENING, PAVING, DRAINAGE, AND SIDEWALK IMPROVEMENTS PROJECT
GWINNETT COUNTY
CITY OF DACULA, GA

CONSULTANT PROJECT #
200577-01-001

GEORGIA REGISTERED PE040997 PROFESSIONAL ENGINEER VUONG Q. DANG
11/21/25

LEVEL II E&S CERT.#00012
EXP. DATE 12/19/2028

PLAN STATUS	
11/21/2025	BID SET

DATE	DESCRIPTION

KDW	RWH	SAD
DESIGN	DRAWN	CHKD

SCALE .
JOB No. 24-204(200577-01-001)
DATE : 11/14/2025
FILE No.
SHEET No. C300

November 21, 2025
File Path:V:\200523 - City of Dacula\200523-01-001 (ENG) - Administrative Building\Engineering\Engineering Plans\SAN JO SHEETS\200577-01-D SAN JO C300 GRP.dwg
THIS DOCUMENT, TOGETHER WITH THE CONCEPTS AND DESIGNS PRESENTED HEREIN, IS AN INSTRUMENT OF SERVICE, IS INTENDED ONLY FOR THE SPECIFIC PURPOSE AND CLIENT FOR WHICH IT WAS PREPARED. REUSE OF AND IMPROPER RELIANCE ON THIS DOCUMENT WITHOUT WRITTEN AUTHORIZATION AND ADAPTATION BY BOWMAN CONSULTING SHALL BE WITHOUT LIABILITY TO BOWMAN CONSULTING.

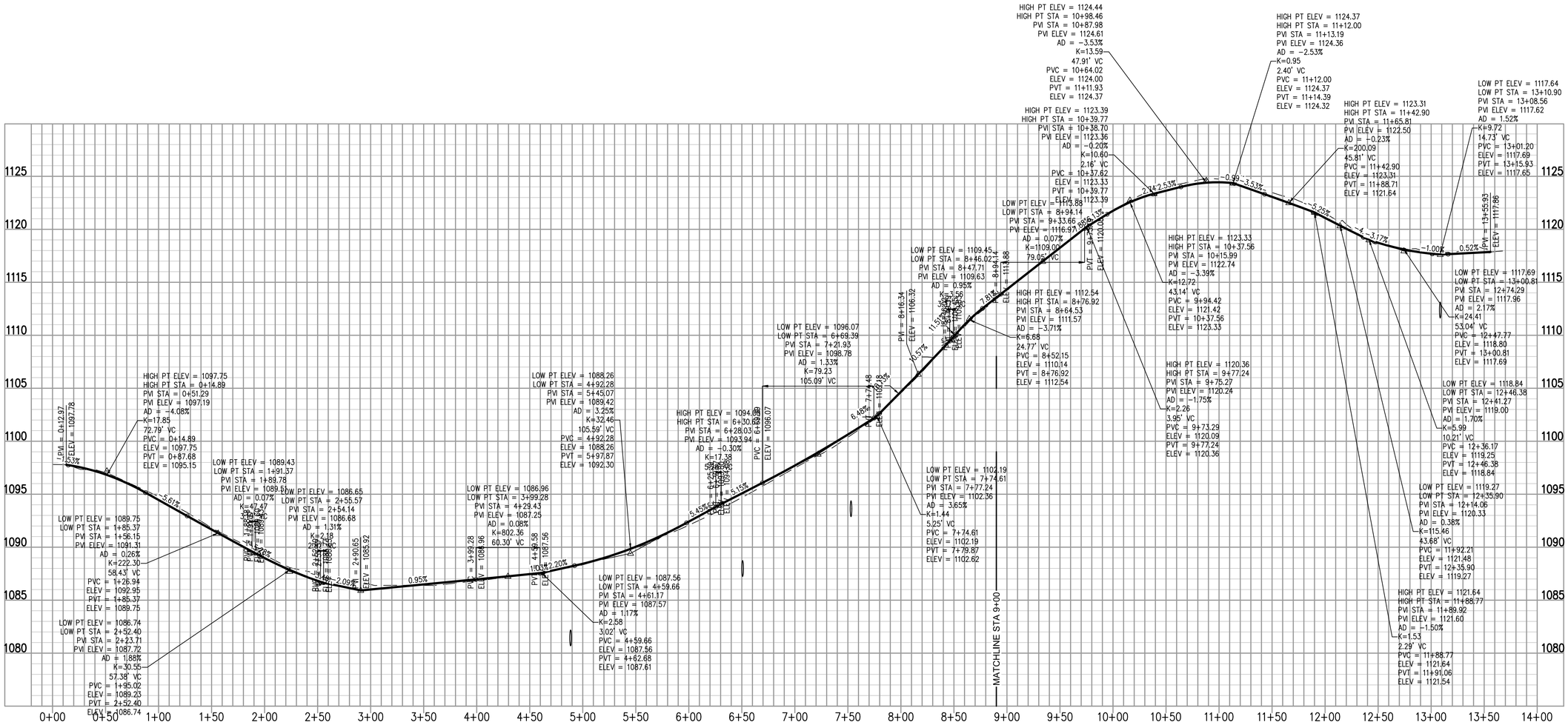

PROPOSED SANJO PROFILE VIEW
HORIZONTAL SCALE: 1"=20'
VERTICAL SCALE: 1"=2'

GEORGIA811
www.Georgia811.com

24 HOUR CONTACT
CITY OF DACULA
BRITTNI NIX
BRITTNI.NIX@DACULAGA.GOV
770-963-7451

Bowman
Certificate of Authorization License No. LSF001241

Bowman Consulting Group Ltd
4174 Silver Peak Parkway
Suwanee, GA 30024
Phone: (770) 932-6550
www.bowman.com

© 2021 Bowman Consulting Group Ltd

ROAD PROFILE
2025 CDBG FOR CITY OF DACULA
SANJO STREET WIDENING, PAVING, DRAINAGE,
AND SIDEWALK IMPROVEMENTS PROJECT
GWINNETT COUNTY
CITY OF DACULA, GA

CONSULTANT PROJECT #
200577-01-001

GEORGIA REGISTERED PROFESSIONAL ENGINEER
VUONG G. DANG
11/21/25

LEVEL II E&S CERT.#00012
EXP. DATE 12/19/2028

PLAN STATUS	
11/21/2025	BID SET

DATE	DESCRIPTION	
KDW	RWH	SAD
DESIGN	DRAWN	CHKD

SCALE .
JOB No. 24-204(200577-01-001)
DATE : 11/14/2025
FILE No.
SHEET No. C310

THIS DOCUMENT, TOGETHER WITH THE CONCEPTS AND DESIGNS PRESENTED HEREIN, AS AN INSTRUMENT OF SERVICE, IS INTENDED ONLY FOR THE SPECIFIC PURPOSE AND CLIENT FOR WHICH IT WAS PREPARED. REUSE OF AND IMPROVEMENTS HEREON, WITHOUT WRITTEN AUTHORIZATION AND ADAPTATION BY BOWMAN CONSULTING SHALL BE WITHOUT LIABILITY TO BOWMAN CONSULTING.

November 21, 2025
File Path:V:\200523 - City of Dacula\200523-01-001 (ENG) - Administrative Building\Engineering\Engineering Plans\SANJO SHEETS\200577-01-D SANJO C300 GRP.dwg

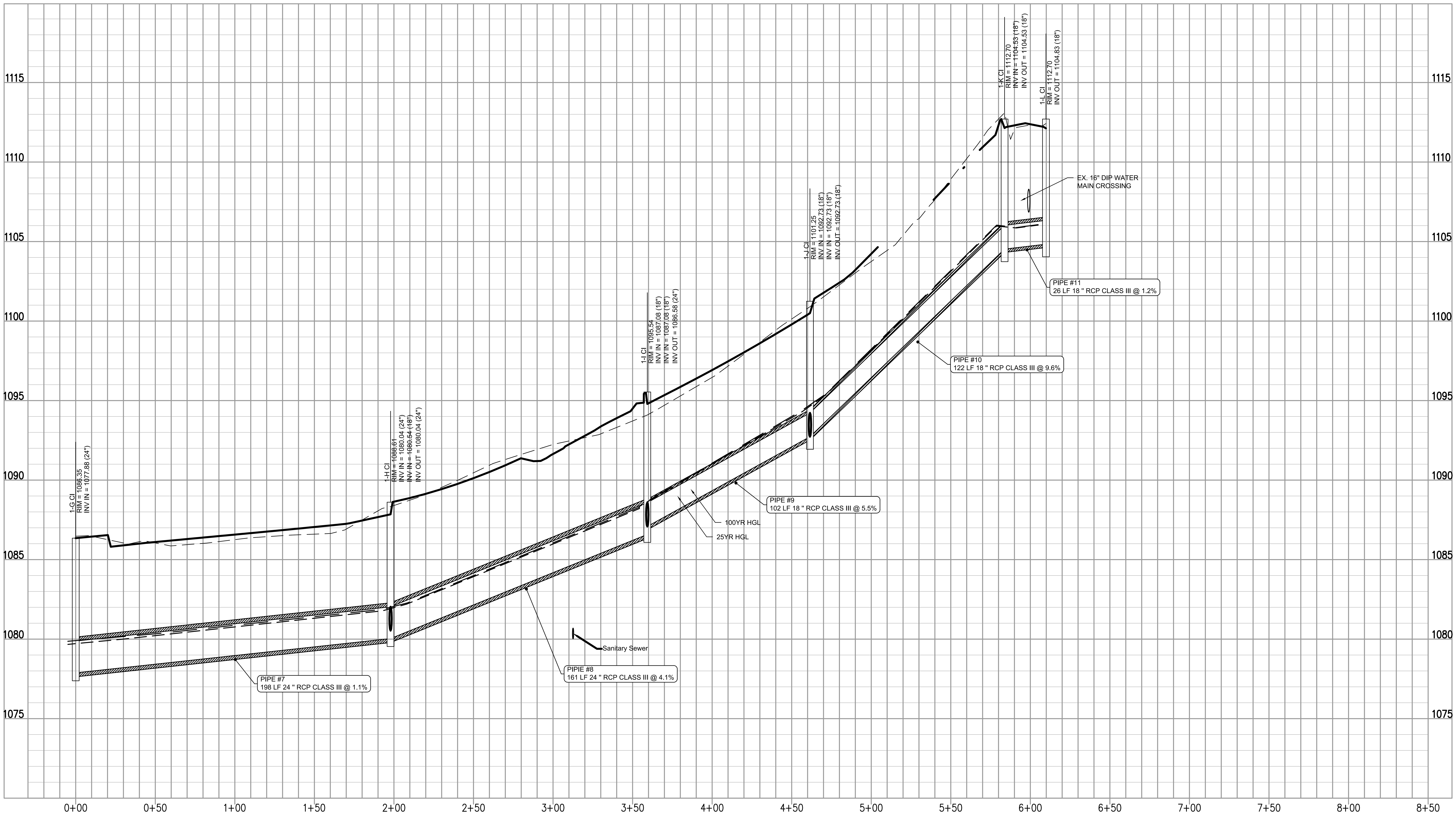

STORM LINE 1 PROFILE VIEW
HORIZONTAL SCALE: 1"=20'
VERTICAL SCALE: 1"=2'

GEORGIA811
www.Georgia811.com

24 HOUR CONTACT
CITY OF DACULA
BRITTNI NIX
BRITTNI.NIX@DACULAGA.GOV
770-963-7451

Bowman
Certificate of Authorization License No. LSF001241
Bowman Consulting Group Ltd
4174 Silver Peak Parkway
Suwanee, GA 30024
Phone: (770) 932-6550
www.bowman.com

© 2021 Bowman Consulting Group Ltd

STORM PROFILE
2025 CDBG FOR CITY OF DACULA
SANJO STREET WIDENING, PAVING, DRAINAGE,
AND SIDEWALK IMPROVEMENTS PROJECT
CITY OF DACULA, GA
GWINNETT COUNTY

CONSULTANT PROJECT #
200577-01-001

GEORGIA REGISTERED PE042637 PROFESSIONAL ENGINEER VUONG Q. DANG
11/21/25

LEVEL II E&S CERT.#90012
EXP. DATE 12/19/2028

PLAN STATUS	
11/21/2025	BID SET
DATE	DESCRIPTION

KDW	RWH	SAD
DESIGN	DRAWN	CHKD

SCALE .
JOB No. 24-204(200577-01-001)
DATE : 11/14/2025
FILE No.
SHEET No. C320

November 21, 2025

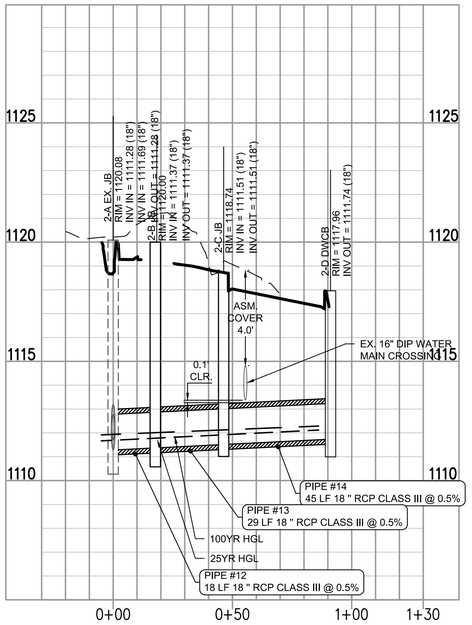

STORM LINE 2 PROFILE VIEW
HORIZONTAL SCALE: 1"=20'
VERTICAL SCALE: 1"=2'

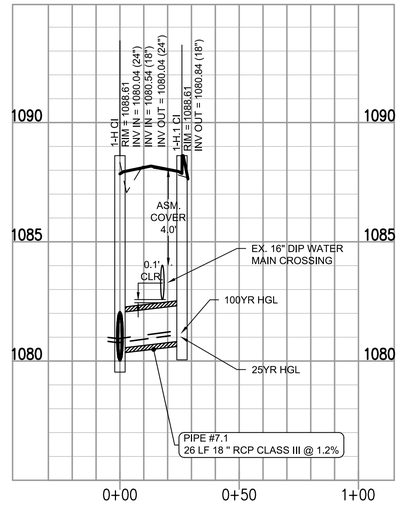

STORM LINE 1–H PROFILE VIEW
HORIZONTAL SCALE: 1"=20'
VERTICAL SCALE: 1"=2'

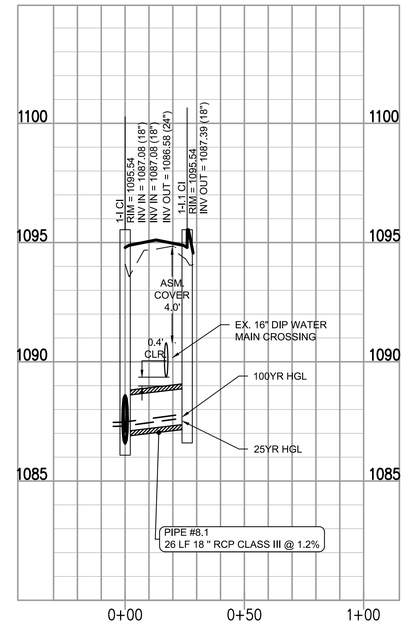

STORM LINE 1–I PROFILE VIEW
HORIZONTAL SCALE: 1"=20'
VERTICAL SCALE: 1"=2'

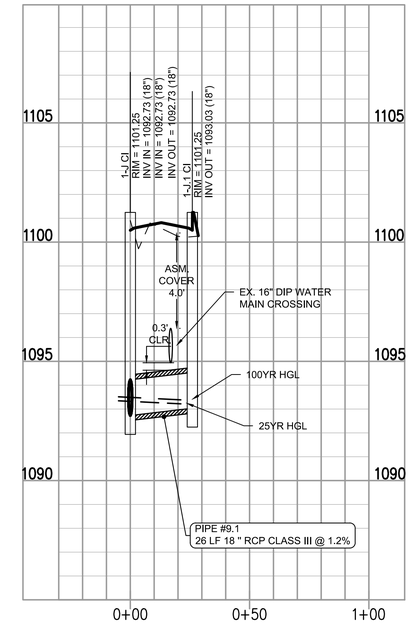

STORM LINE 1–J PROFILE VIEW
HORIZONTAL SCALE: 1"=20'
VERTICAL SCALE: 1"=2'

PIPE CHART

Pipe #	Pipe Mat.	Location	Inlet Type	D.A. (Acres)	D.A. (Sum)	IMPERV. AREA (ac)	C	Tc (Min)	I 25 (In/Hr)	Q 25 (cfs)	Q25 (Sum) (cfs)	I100 (In/Hr)	Q100 (cfs)	Q100 (Sum) (cfs)	Slope %	Lgth. +/-(ft.)	Size (In)	Vel. (fps)	I 10 (In/Hr)	Q 10 (cfs)	Gutter Slope	**Gutter Spread**
EX2	RCP	2A.1-2A	DWCB	0.37	0.37	0.37	0.95	5	9.276	3.22	3.22	11.436	3.98	3.98	10.86	58	18	4.60	7.30	2.54	1.5	4.3
14	RCP	2D-2C	DWCB	0.45	0.45	0.37	0.85	5	9.276	3.53	3.53	11.436	4.35	4.35	0.50	45	18	4.26	7.30	2.78	1.1	4.7
13	RCP	2C-2B	JB	0.00	0.45			5	9.276	0.00	3.53	11.436	0.00	4.35	0.50	29	18	3.51				
12	RCP	2B-2A	JB	0.00	0.45			5	9.276	0.00	3.53	11.436	0.00	4.35	0.50	18	18	3.51				
EX1	RCP	2A-EX-8	JB	0.00	0.82			5	9.276	0.00	6.76	11.436	0.00	8.33	1.26	41	18	6.67				
OUTFALL	EX.RCP	1G.1-1G	EX.JB*	SEE CITY HALL HYDRO REPORT						9.96			44.31		1.00		24	6.38				
9.1	RCP	1J.1-1J	CI	0.04	0.04	0.04	0.88	5	9.276	0.33	0.33	11.436	0.40	0.40	1.00	31	18	2.03	7.30	0.26	7.1	2.7
8.1	RCP	1I.1-1I	CI	0.03	0.03	0.03	0.94	5	9.276	0.26	0.26	11.436	0.32	0.32	1.00	31	18	2.05	7.30	0.21	5.6	2.6
7.1	RCP	1H.1-1H	CI	0.05	0.05	0.05	0.95	5	9.276	0.41	0.41	11.436	0.51	0.51	1.00	31	18	2.02	7.30	0.32	3.5	3.4
11	RCP	1L-1K	CI	0.06	0.06	0.06	0.95	5	9.276	0.53	0.53	11.436	0.65	0.65	1.00	31	18	2.01	7.30	0.42	8.7	3.1
10	RCP	1K-1J	CI	0.20	0.26	0.12	0.71	5	9.276	1.32	1.85	11.436	1.63	2.28	9.70	122	18	3.00	7.30	1.04	7.1	4.6
9	RCP	1J-1I	CI	0.10	0.36	0.08	0.86	5	9.276	0.79	2.65	11.436	0.98	3.26	5.50	102	18	6.89	7.30	0.62	5.6	3.9
8	RCP	1I-1H	CI	0.20	0.56	0.06	0.52	5	9.276	0.96	3.61	11.436	1.19	4.45	4.10	161	24	3.69	7.30	0.76	5.6	4.2
7	RCP	1H-1H	CI	0.17	0.73	0.11	0.72	5	9.276	1.14	4.75	11.436	1.40	5.85	1.00	158	24	5.31	7.30	0.90	3.5	4.9
1.6	EX.RCP	1G-1F	EX.CI	0.49	0.49	0.34	0.76	5	9.276	3.47	3.47	11.436	4.28	4.28	1.00	41	30	5.68	7.30	2.73	1.5	4.4
1.5	EX.RCP	1F-1E	EX.CI	0.13	0.62	0.13	0.95	5	9.276	1.18	4.65	11.436	1.46	5.74	1.00	20	30	5.88	7.30	0.93	1.5	2.9
1.4	EX.HDPE	1E-1D	EX.JB	0.00	0.62	0.00		5	9.276	0.00	4.65	11.436	0.00	5.74	3.50	125	30	5.65				
1.3	EX.HDPE	1D-1C	EX.JB	0.68	1.30	0.13	0.46	5	9.276	2.92	7.57	11.436	3.59	9.33	1.00	15	30	6.11				
1.2	EX.HDPE	1C-1B	EX.JB	0.00	1.30	0.00		5	9.276	0.00	7.57	11.436	0.00	9.33	1.00	54	30	6.12				
1.1	EX.HDPE	1B-1A	EX.JB	0.00	1.30	0.00		5	9.276	0.00	7.57	11.436	0.00	9.33	1.30	7	30	7.44				

GEORGIA811
www.Georgia811.com

24 HOUR CONTACT
CITY OF DACULA
BRITTNI NIX
BRITTNI.NIX@DACULAGA.GOV
770-963-7451

Bowman
Certificate of Authorization License No. LSF001241

Bowman Consulting Group Ltd
4174 Silver Peak Parkway
Suwanee, GA 30024
Phone: (770) 932-6550
www.bowman.com

© 2021 Bowman Consulting Group Ltd.

STORM PROFILE
2025 CDBG FOR CITY OF DACULA
SANJO STREET WIDENING, PAVING, DRAINAGE,
AND SIDEWALK IMPROVEMENTS PROJECT
GWINNETT COUNTY
CITY OF DACULA, GA

CONSULTANT PROJECT #
200577-01-001

GEORGIA REGISTERED PROFESSIONAL ENGINEER VUONG Q. DANG
11/21/25

LEVEL II E&S CERT.#00012
EXP. DATE 12/19/2028

PLAN STATUS	
11/21/2025	BID SET
DATE	DESCRIPTION

KDW	RWH	SAD
DESIGN	DRAWN	CHKD

SCALE .
JOB No. 24-204(200577-01-001)
DATE : 11/14/2025
FILE No.
SHEET No. C321

November 21, 2025
File Path:V:\200523 - City of Dacula\200523-01-001 (ENG) - Administrative Building\Engineering\Engineering Plans\SANJO SHEETS\200577-01-D SANJO C300 GRP.dwg
THIS DOCUMENT, TOGETHER WITH THE CONCEPTS AND DESIGNS PRESENTED HEREIN, IS AN INSTRUMENT OF SERVICE, IS INTENDED ONLY FOR THE SPECIFIC PURPOSE AND CLIENT FOR WHICH IT WAS PREPARED. REUSE OF AND IMPROPER RELIANCE ON THIS DOCUMENT WITHOUT WRITTEN AUTHORIZATION AND ADAPTATION BY BOWMAN CONSULTING SHALL BE WITHOUT LIABILITY TO BOWMAN CONSULTING.

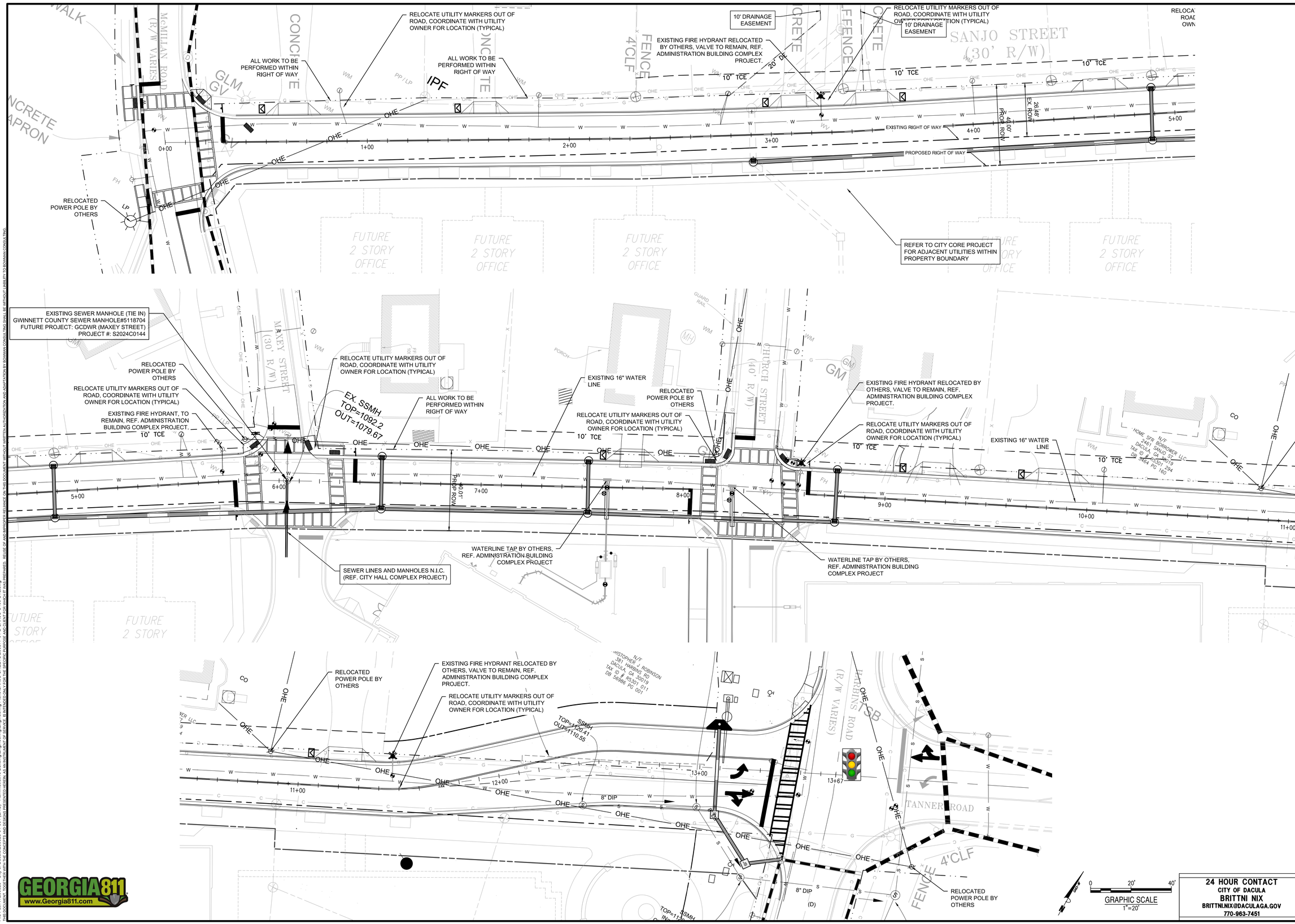

GEORGIA811 www.Georgia811.com

24 HOUR CONTACT
CITY OF DACULA
BRITTNI NIX
BRITTNI.NIX@DACULAGA.GOV
770-963-7451

Bowman
Certificate of Authorization License No. LSF001241

Bowman Consulting Group Ltd
4174 Silver Peak Parkway
Suwanee, GA 30024
Phone: (770) 932-6550
www.bowman.com
© 2021 Bowman Consulting Group Ltd

UTILITY PLAN
2025 CDBG FOR CITY OF DACULA
SANJO STREET WIDENING, PAVING, DRAINAGE, AND SIDEWALK IMPROVEMENTS PROJECT
GWINNETT COUNTY
CITY OF DACULA, GA

CONSULTANT PROJECT # 200577-01-001

GEORGIA REGISTERED PROFESSIONAL ENGINEER VUONG Q. DANG 11/21/25

LEVEL II E&S CERT.#00012
EXP. DATE 12/19/2028

PLAN STATUS	
11/21/2025	BID SET

DATE	DESCRIPTION	
KDW	RWH	SAD
DESIGN	DRAWN	CHKD

SCALE .
JOB No. 24-204(200577-01-001)
DATE : 11/14/2025
FILE No.
SHEET No. C400

November 21, 2025
File Path:V:\200523 - City of Dacula\200523-01-001 (ENG) - Administrative Building\Engineering\Engineering Plans\SAN JO SHEETS\200577-01-D SAN JO C400 UTL.dwg
THIS DOCUMENT, TOGETHER WITH THE CONCEPTS AND DESIGNS PRESENTED HEREIN, IS AN INSTRUMENT OF SERVICE, IS INTENDED ONLY FOR THE SPECIFIC PURPOSE AND CLIENT FOR WHICH IT WAS PREPARED. REUSE OF AND IMPROPER RELIANCE ON THIS DOCUMENT WITHOUT WRITTEN AUTHORIZATION AND ADAPTATION BY BOWMAN CONSULTING SHALL BE WITHOUT LIABILITY TO BOWMAN CONSULTING.

2025 STATE OF GEORGIA EROSION, SEDIMENTATION & POLLUTION CONTROL NPDES NOTES & CHECKLIST

SWCD: HOPKINS CREEK
PROJECT NAME: SANJO STREET ADDRESS: SANJO STREET DACULA, GA CITY/COUNTY: DACULA / GWINNETT

C500 Y

ITEM #1

THE APPLICABLE EROSION, SEDIMENTATION AND POLLUTION CONTROL PLAN CHECKLIST ESTABLISHED BY THE COMMISSION AS OF JANUARY 1 OF THE YEAR IN WHICH THE LAND-DISTURBING ACTIVITY WAS PERMITTED.
(THE COMPLETED CHECKLIST MUST BE SUBMITTED WITH THE ES&PC PLAN OR THE PLAN WILL NOT BE REVIEWED)

C500 Y

ITEM #2

LEVEL II CERTIFICATION NUMBER ISSUED BY THE COMMISSION, SIGNATURE AND SEAL OF THE CERTIFIED DESIGN PROFESSIONAL, (SIGNATURE, SEAL AND LEVEL II NUMBER MUST BE ON EACH SHEET PERTAINING TO ES&PC PLAN OR THE PLAN WILL NOT BE REVIEWED)

GSWCC GEORGIA SOIL AND WATER CONSERVATION COMMISSION

VICTOR DANG

CERTIFICATION NUMBER: #90012
ISSUED: 09/01/2024 EXPIRES: 12/19/2028

SIGNED

EXPIRATION 12/19/2028
#90012
NUMBER

victor.dang@bowman.com

C510 - C530 Y

ITEM #3

LIMITS OF DISTURBANCE SHALL BE NO GREATER THAN 50 ACRES AT ANY ONE TIME WITHOUT PRIOR WRITTEN AUTHORIZATION FROM THE GAEPD DISTRICT OFFICE, IF GAEPD APPROVES THE REQUEST TO DISTURB 50 ACRES OR MORE AT ANY ONE TIME, THE PLAN MUST INCLUDE AT LEAST 4 OF THE BMPS LISTED IN APPENDIX 1 OF THIS CHECKLIST AND THE GAEPD APPROVAL LETTER. * (A COPY OF THE WRITTEN APPROVAL BY GAEPD MUST BE ATTACHED TO THE PLAN FOR THE PLAN TO BE REVIEWED.) SITE IS LESS THAN 50 ACRES.

C500 - C530 Y

ITEM #4

THE NAME AND PHONE NUMBER OF THE 24-HOUR CONTACT RESPONSIBLE FOR EROSION, SEDIMENTATION AND POLLUTION CONTROLS.

THE NAME AND PHONE NUMBER OF THE 24-HOUR LOCAL CONTACT RESPONSIBLE FOR EROSION, SEDIMENTATION AND POLLUTION CONTROLS IS BRITTNI NIX, PHONE NUMBER 770-963-8451.

C500 Y

ITEM #5

PROVIDE THE NAME, ADDRESS, EMAIL ADDRESS, AND PHONE NUMBER OF PRIMARY PERMITTEE,

CONTRACTOR

C500 Y

ITEM #6

NOTE THE TOTAL AND DISTURBED ACREAGES OF THE PROJECT OR PHASE UNDER CONSTRUCTION.
(TOTAL SITE ACREAGE = 1.79 ACRES.)
(DISTURBED ACREAGE = 0.99 ACRES.)

C500 - C510 Y

ITEM #7

PROVIDE THE GPS LOCATION OF THE CONSTRUCTION EXIT FOR THE SITE, GIVE THE LATITUDE AND LONGITUDE IN DECIMAL DEGREES.

GPS LOCATION OF THE CONSTRUCTION EXIT: LATITUDE 33.982891° N, LONGITUDE -83.895787° W

C500 - C530 Y

ITEM #8

INITIAL DATE OF THE PLAN AND THE DATES OF ANY REVISIONS MADE TO THE PLAN INCLUDING THE ENTITY WHO REQUESTED THE REVISIONS.

INITIAL DATE AND REVISION DATES OF THE PLAN ARE DEPICTED ON SHEETS C510 THROUGH C530

C500 Y

ITEM #9

DESCRIPTION OF THE NATURE OF CONSTRUCTION ACTIVITY AND EXISTING SITE CONDITIONS.
NATURE OF CONSTRUCTION: PROPOSED IMPROVEMENTS FOR THE SITE INCLUDE CONSTRUCTION OF A MUNICIPAL, PUBLIC, OFFICE AND RETAIL COMPLEX.
EXISTING SITE CONDITIONS: EXISTING AREA IS DEVELOPED RESIDENTIAL AND UNDEVELOPED LAND WITHIN THE PARCEL.

C500 Y

ITEM #10

PROVIDE VICINITY MAP SHOWING SITE'S RELATION TO SURROUNDING AREAS. INCLUDE DESIGNATION OF SPECIFIC PHASE, IF NECESSARY.

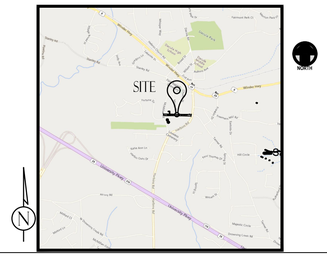

C500 Y

ITEM #11

IDENTIFY THE PROJECT RECEIVING WATERS AND DESCRIBE ALL SENSITIVE ADJACENT AREAS INCLUDING STREAMS, LAKES, RESIDENTIAL AREAS, WETLANDS, MARSHLANDS, ETC. WHICH MAY BE AFFECTED.

THE PROJECT RECEIVING WATERS IS UNNAMED TRIBUTARY OF HEADWATERS TO HOPKINS CREEK. THIS SEGMENT IS NOT IMPAIRED.

C500 Y

ITEM #12

DESIGN PROFESSIONAL'S CERTIFICATION STATEMENT AND SIGNATURE THAT THE SITE WAS VISITED PRIOR TO DEVELOPMENT OF THE ES&PC PLAN AS STATED ON PART IV PAGE 19 OF THE PERMIT.

"I CERTIFY UNDER PENALTY OF LAW THAT THIS PLAN WAS PREPARED AFTER A SITE VISIT TO THE LOCATIONS DESCRIBED HEREIN BY MYSELF OR MY AUTHORIZED AGENT, UNDER MY SUPERVISION."

CERTIFIED BY (DESIGN PROFESSIONAL) 11/21/2025 DATE

C500 Y

ITEM #13

DESIGN PROFESSIONAL'S CERTIFICATION STATEMENT AND SIGNATURE THAT THE PERMITTEE'S ES&PC PLAN PROVIDES FOR AN APPROPRIATE AND COMPREHENSIVE SYSTEM OF BMPS AND SAMPLING TO MEET PERMIT REQUIREMENTS AS STATED ON PART IV PAGE 19 OF THE PERMIT. *

"I CERTIFY THAT THE PERMITTEE'S EROSION, SEDIMENTATION AND POLLUTION CONTROL PLAN PROVIDES FOR AN APPROPRIATE AND COMPREHENSIVE SYSTEM OF BEST MANAGEMENT PRACTICES REQUIRED BY THE GEORGIA WATER QUALITY CONTROL ACT AND THE DOCUMENT "MANUAL FOR EROSION AND SEDIMENT CONTROL IN GEORGIA" (MANUAL) PUBLISHED BY THE GEORGIA SOIL AND WATER CONSERVATION COMMISSION AS OF JANUARY 1 OF THE YEAR IN WHICH THE LAND DISTURBING ACTIVITY WAS PERMITTED, PROVIDES FOR THE SAMPLING OF THE RECEIVING WATER(S) OR THE SAMPLING OF THE STORMWATER OUTFALLS AND THAT THE DESIGNED SYSTEM OF BEST MANAGEMENT PRACTICES AND SAMPLING METHODS IS EXPECTED TO MEET THE REQUIREMENTS CONTAINED IN THE GENERAL NPDES PERMIT NO. GAR 100001."

CERTIFIED BY (DESIGN PROFESSIONAL) 11/21/2025 DATE

C500 - C530 Y

ITEM #14

"THE DESIGN PROFESSIONAL WHO PREPARED THE ES&PC PLAN IS TO INSPECT THE INSTALLATION OF THE INITIAL SEDIMENT STORAGE REQUIREMENTS AND PERIMETER CONTROL BMPS WITHIN 7 DAYS AFTER INSTALLATION." IN ACCORDANCE WITH PART IV.A.5 PAGE 25 OF THE PERMIT. *

DATE 7-DAY INSPECTION

C500 - C530 Y

ITEM #15

CLEARLY NOTE THE STATEMENT THAT "NON-EXEMPT ACTIVITIES SHALL NOT BE CONDUCTED WITHIN THE 25 OR 50-FOOT UNDISTURBED STREAM BUFFERS AS MEASURED FROM THE POINT OF WRESTED VEGETATION OR WITHIN 25-FEET OF THE COASTAL MARSHLAND BUFFER AS MEASURED FROM THE JURISDICTIONAL DETERMINATION LINE WITHOUT FIRST ACQUIRING THE NECESSARY VARIANCES AND PERMITS."

N

ITEM #16

PROVIDE A DESCRIPTION OF ANY BUFFER ENCROACHMENTS AND INDICATE WHETHER A BUFFER VARIANCE IS REQUIRED.
THERE IS NO BUFFER ENCROACHMENT BY PROPOSED CONSTRUCTION. NO BUFFER VARIANCE IS REQUIRED.

GEORGIA811 www.Georgia811.com

PAGE # Y/N

C500 Y

ITEM #17

CLEARLY NOTE THE STATEMENT THAT "AMENDMENTS/REVISIONS TO THE ES&PC PLAN WHICH HAVE A SIGNIFICANT EFFECT ON BMPS WITH A HYDRAULIC COMPONENT MUST BE CERTIFIED BY THE DESIGN PROFESSIONAL." *

C510 - C530 Y

ITEM #18

CLEARLY NOTE THE STATEMENT THAT "WASTE MATERIALS SHALL NOT BE DISCHARGED TO WATERS OF THE STATE, EXCEPT AS AUTHORIZED BY A SECTION 404 PERMIT." *

C510 - C530 Y

ITEM #19

CLEARLY NOTE THE STATEMENT THAT "THE ESCAPE OF SEDIMENT FROM THE SITE SHALL BE PREVENTED BY THE INSTALLATION OF EROSION AND SEDIMENT CONTROL MEASURES AND PRACTICES PRIOR TO LAND DISTURBING ACTIVITIES."

C510 - C530 Y

ITEM #20

CLEARLY NOTE THE STATEMENT THAT "EROSION CONTROL MEASURES WILL BE MAINTAINED AT ALL TIMES. IF FULL IMPLEMENTATION OF THE APPROVED PLAN DOES NOT PROVIDE FOR EFFECTIVE EROSION CONTROL, ADDITIONAL EROSION AND SEDIMENT CONTROL MEASURES SHALL BE IMPLEMENTED TO CONTROL OR TREAT THE SEDIMENT SOURCE.

C510 - E530 Y

ITEM #21

CLEARLY NOTE THE STATEMENT "ANY DISTURBED AREA LEFT EXPOSED FOR A PERIOD GREATER THAN 14 DAYS SHALL BE STABILIZED WITH MULCH OR TEMPORARY SEEDING.

N

ITEM #22

ANY CONSTRUCTION ACTIVITY WHICH DISCHARGES STORM WATER INTO AN IMPAIRED STREAM SEGMENT, OR WITHIN 1 LINEAR MILE UPSTREAM OF AND WITHIN THE SAME WATERSHED AS, ANY PORTION OF A BIOTA IMPAIRED STREAM SEGMENT MUST COMPLY WITH PART III.C. OF THE PERMIT, INCLUDE THE COMPLETED APPENDIX 1 LISTING ALL OF THE BMPS THAT WILL BE USED FOR THOSE AREAS OF THE SITE WHICH DISCHARGED TO THE IMPAIRED STREAM SEGMENT."

N

ITEM #23

IF A TMDL IMPLEMENTATION PLAN FOR SEDIMENT HAS BEEN FINALIZED FOR THE IMPAIRED STREAM SEGMENT (IDENTIFIED IN ITEM 22 ABOVE) AT LEAST SIX MONTHS PRIOR TO SUBMITTAL OF NOI, THE ES&PC PLAN MUST ADDRESS ANY SITE-SPECIFIC CONDITIONS OR REQUIREMENTS INCLUDED IN THE TMDL IMPLEMENTATION PLAN."

C510 - C520, C540 Y

ITEM #24

BMPS FOR CONCRETE WASHDOWN OF TOOLS, CONCRETE MIXER CHUTES, HOPPERS AND THE REAR OF THE VEHICLES. WASHOUT OF THE DRUM AT THE CONSTRUCTION SITE IS PROHIBITED."

C500 Y

ITEM #25

PROVIDE BMPS FOR THE REMEDIATION OF ALL PETROLEUM SPILLS AND LEAKS.

REMEDIATION OF ALL PETROLEUM SPILLS AND LEAKS - CLEANUP AND CONTROL PRACTICES

LOCAL, STATE AND MANUFACTURE'S RECOMMENDED METHODS FOR SPILL CLEANUP WILL BE CLEARLY POSTED AND PROCEDURES MADE AVAILABLE TO SITE PERSONNEL.

MATERIALS AND EQUIPMENT NECESSARY FOR SPILL CLEANUP WILL BE KEPT IN THE MATERIAL STORAGE AREA ON-SITE. TYPICAL EQUIPMENT AND MATERIALS FOR CLEANUP INCLUDE BROOMS, DUSTPANS, MOPS, RAGS, GLOVES, GOGGLES, RESPIRATORS, CAT LITTER, SAND, SAWDUST AND PLASTIC AND METAL TRASH CONTAINERS FOR THIS PURPOSE.

SPILL PREVENTION PRACTICES AND PROCEDURES WILL BE REVIEWED AFTER A SPILL AND ADJUSTED AS NECESSARY TO PREVENT FUTURE SPILLS

ALL SPILLS WILL BE CLEANED UP IMMEDIATELY UPON DISCOVERY. ALL SPILLS WE BE REPORTED AS REQUIRED BY LOCAL, STATE, AND FEDERAL REGULATIONS.

FOR SPILLS THAT IMPACT SURFACE WATER (LEAVE A SHEEN ON SURFACE WATER), THE NATIONAL RESPONSE CENTER (NRC) WILL BE CONTACTED WITHIN 24 HOURS AT 800-424-8802

FOR SPILLS OF UNKNOWN AMOUNT, THE NATIONAL RESPONSE CENTER (NRC) WILL BE CONTACTED WITHIN 24 HOURS AT 800-424-8802

FOR SPILLS LESS THAN 25 GALLONS AND NO SURFACE WATER IMPACTS, THE SPILL WILL BE CLEANED UP AND LOCAL AGENCIES WILL BE CONTACTED AS REQUIRED.

THE CONTRACTOR SHALL NOTIFY THE LICENSED PROFESSIONAL WHO PREPARED THIS PLAN IF MORE THAN 1320 GALLONS OF PETROLEUM IS STORED ON SITE (THIS INCLUDES CAPACITIES OF EQUIPMENT) OR IF ANY ONE PIECE OF EQUIPMENT HAS A CAPACITY GREATER THAN 660 GALLONS. THE CONTRACTOR WILL NEED A SPILL PREVENTION CONTAINMENT AND COUNTERMEASURES PLAN PREPARED BY THAT LICENSED PROFESSIONAL.

C500 Y

ITEM #26

DESCRIPTION OF THE MEASURES THAT WILL BE INSTALLED DURING THE CONSTRUCTION PROCESS TO CONTROL POLLUTANTS IN STORM WATER THAT WILL OCCUR AFTER CONSTRUCTION OPERATIONS HAVE BEEN COMPLETED."

DESCRIPTION OF MEASURES:
1. UNDERGROUND WATER DETENTION SYSTEM THAT COLLECT MOST OF DEVELOPMENT SURFACE RUNOFF WITH AN OUTLET CONTROL STRUCTURE.
2. VEGETATED SWALE ALONG EASTERN PROPERTY LINE.

PRODUCT SPECIFIC PRACTICES
PETROLEUM BASED PRODUCTS - CONTAINERS FOR PRODUCTS SUCH AS FUELS, LUBRICANTS, AND TARS WILL BE INSPECTED DAILY FOR LEAKS AND SPILLS. THIS INCLUDES ONSITE VEHICLES AND MACHINERY DAILY INSPECTIONS AND REGULAR PREVENTATIVE MAINTENANCE OF SUCH EQUIPMENT. EQUIPMENT MAINTENANCE AREAS WILL BE LOCATED AWAY FROM STATE WATERS, NATURAL DRAINS, AND STORM WATER DRAINAGE INLETS. IN ADDITION, TEMPORARY FUELING TANKS SHALL HAVE A SECONDARY CONTAINMENT LINER TO PREVENT/MINIMIZE SITE CONTAMINATION. DISCHARGE OF OILS, FUELS, AND LUBRICANTS IS PROHIBITED. PROPER DISPOSAL METHODS WILL INCLUDE COLLECTION IN A SUITABLE CONTAINER AND DISPOSAL AS REQUIRED BY LOCAL AND STATE REGULATIONS.
PAINTS/FINISHES/SOLVENTS - ALL PRODUCTS WILL BE STORED IN TIGHTLY SEALED ORIGINAL CONTAINERS WHEN NOT IN USE. EXCESS PRODUCTS WILL NOT BE DISCHARGED TO THE STORM WATER COLLECTION SYSTEM. EXCESS PRODUCT, MATERIALS USED WITH THESE PRODUCTS, AND PRODUCT CONTAINERS WILL BE DISPOSED OF ACCORDING TO MANUFACTURER'S SPECIFICATIONS AND RECOMMENDATIONS.
CONCRETE TRUCK WASHING - NO CONCRETE TRUCKS WILL BE ALLOWED TO WASH OUT OR DISCHARGE SURPLUS CONCRETE OR DRUM WASH WATER ONSITE.
FERTILIZER/HERBICIDES - THESE PRODUCTS WILL BE APPLIED AT RATES THAT DO NOT EXCEED THE MANUFACTURER'S SPECIFICATIONS OR ABOVE THE GUIDELINES SET FORTH IN THE CROP ESTABLISHMENT OR IN THE GSWCC MANUAL FOR EROSION AND SEDIMENT CONTROL IN GEORGIA. ANY STORAGE OF THESE MATERIALS WILL BE UNDER ROOF IN SEALED CONTAINERS.
BUILDING MATERIALS - NO BUILDING OR CONSTRUCTION MATERIALS WILL BE BURIED OR DISPOSED OF ON-SITE, ALL SUCH MATERIAL WILL BE DISPOSED OF IN PROPER WASTE DISPOSAL PROCEDURES.

C500 Y

ITEM #27

DESCRIPTION OF THE PRACTICES TO PROVIDE COVER FOR BUILDING MATERIALS AND BUILDING PRODUCTS ON SITE."

PRACTICES TO PROVIDE COVER FOR BUILDING MATERIALS AND BUILDING PRODUCTS ON SITE

BUILDING MATERIALS, BUILDING PRODUCTS, CONSTRUCTION WASTES, TRASH, LANDSCAPE MATERIALS, FERTILIZERS, PESTICIDES, HERBICIDES, DETERGENTS, SANITARY WASTES, OR OTHER MATERIALS ON SITE SHALL HAVE COVER PROVIDED SUCH AS PLASTIC SHEETING OR TEMPORARY ROOFING TO MINIMIZE THE EXPOSURE OF THESE PRODUCTS TO PRECIPITATION AND TO STORMWATER OR BY SIMILARLY EFFECTIVE MEANS DESIGNED TO MINIMIZE THE DISCHARGE OF POLLUTANTS FROM THESE AREAS.

C500 Y

ITEM #28

DESCRIPTION OF THE PRACTICES THAT WILL BE USED TO REDUCE THE POLLUTANTS IN THE STORM WATER DISCHARGES."

DESCRIPTION OF PRACTICES THAT WILL BE USED TO REDUCE POLLUTANTS IN STORM WATER DISCHARGES

SAME AS LISTED ON ITEM #26:
1. UNDERGROUND WATER DETENTION SYSTEM THAT COLLECT MOST OF DEVELOPMENT SURFACE RUNOFF WITH AN OUTLET CONTROL STRUCTURE.

C500 Y

ITEM #29

DESCRIPTION AND CHART OR TIMELINE OF THE INTENDED SEQUENCE OF MAJOR ACTIVITIES WHICH DISTURBS SOILS FOR THE MAJOR PORTIONS OF THE SITE (I.E., INITIAL PERIMETER AND SEDIMENT STORAGE BMPS, CLEARING AND GRUBBING ACTIVITIES, EXCAVATION ACTIVITIES, UTILITY ACTIVITIES, TEMPORARY AND FINAL STABILIZATION).

CONSTRUCTION ACTIVITY SCHEDULE

MONTH (2024-2025)

		OCT	NOV	DEC	JAN	FEB	MAR	APR	MAY	JUN	JUL	AUG	SEP
A) INITIAL PERIMETER INSTALLATION & INITIAL BMP INSTALLATION AS CALLED ON PHASE 1	(A)												
B) CLEARING & GRUBBING (AFTER INITIAL PERIMETER & BMP INSTALLATION HAVE BEEN COMPLETED)	(B)												
C) INSTALL PH 2 EROSION CONTROL DEVICES	(C)												
D) PERFORM OTHER GRADING OPERATIONS	(D)												
E) PLACE TEMPORARY VEGETATION	(E)												
F) INSTALL STORMWATER INFRASTRUCTURE	(F)												
G) INSTALL BASE AND COMPACTED GRAVEL	(G)												
H) PLACE PAVEMENT	(H)												
I) FINE GRADING AND LANDSCAPING	(I)												
J) PLACE PERMANENT VEGETATION	(J)												
K) REMOVAL OF TEMPORARY BMP'S	(K)												
L) FINAL CLEAN-UP	(L)												
M) MAINTENANCE OF BMP'S	(M)												

PRODUCT DISPOSAL PRACTICES TO COMPLY WITH WASTE DISPOSAL, SANITARY SEWER, OR SEPTIC TANK REGULATIONS:

PETROLEUM BASED PRODUCTS
CONTAINERS FOR SUCH PRODUCTS SUCH AS FUELS, LUBRICANTS AND TARS WILL BE INSPECTED DAILY FOR LEAKS AND SPILLS. THIS INCLUDES ON-SITE VEHICLES AND MACHINERY DAILY INSPECTIONS AND REGULAR PREVENTATIVE MAINTENANCE OF SUCH EQUIPMENT. EQUIPMENT MAINTENANCE AREAS WILL BE LCATED AWAY FROM STATE WATER, NATURAL DRAINS AND STORM WATER DRAINAGE INLETS. IN ADDITION, TEMPORARY FUELING TANKS SHALL HAVE A SECONDARY CONTAINMENT LINER TO PREVENT/MINIMIZE SITE CONTAMINATION. DISCHARGE OF OILS, FUELS, AND LUBRICANTS IS PROHIBITED. PROPER DISPOSAL METHODS WILL INCLUDE COLLECTION IN A SUITABLE CONTAINER AND DISPOSAL AS REQUIRED BY LOCAL AND STATE REGULATIONS.

PAINTS/FINISHES/SOLVENTS
ALL PRODUCTS WIL BE STORED IN TIGHTLY SEALED ORIGINAL CONTAINERS WHEN NOT IN USE. EXCESS PRODUCT WILL NOT BE DISCHARGED TO THE STORM WATER COLLECTION SYSTEM, EXCESS PRODUCE. MATERIALS USED WITH THESE PRODUCTS AND PRODUCT CONTAINERS WILL BE DISPOSED OF ACCORDING TO MANUFACTURER'S SPECIFICATIONS AND RECOMMENDATIONS.

CONCRETE TRUCK WASHING
NO CONCRETE TRUCK WASHING WILL BE ALLOWED TO WASH OUT OR DISCHARGE SURPLUS CONCRETE OR DRUM WASH WATER ONSITE.

FERTILIZERS/HERBICIDES
THESE PRODUCTS WILL BE APPLIED AT RATES THAT DO NOT EXCEED THE MANUFACTURER'S SPECIFICATIONS OR ABOVE THE GUIDELINES SET FORTH IN THE CROP ESTABLISHMENT OR IN THE GSWCC MANUAL FOR EROSION AND SEDIMENT CONTROL IN GEORGIA. ANY STORAGE OF THESE MATERIALS WILL BE UNDER ROOF IN SEALED CONTAINERS.

SANITARY WASTES:
A MINIMUM OF ONE PORTABLE SANITARY UNIT WILL BE PROVIDED FOR EVERY TEN (10) WORKERS ON THE SITE. ALL SANITARY WASTE WILL BE COLLECTED FROM THE PORTABLE UNITS A MINIMUM OF ONE TIME PER WEEK BY A LICENSED PORTABLE FACILITY PROVIDER IN COMPLETE COMPLIANCE WITH LOCAL AND STATE REGULATIONS.

ALL SANITARY SEWER WASTE UNTIS WILL BE LOCATED IN ONE AREA WHERE THE LIKELIHOOD OF THE UNIT CONTRIBUTING TO STORM WATER DISCHARGE IS NEGLIGIBLE. ADDITIONAL CONTAINMENT BMP'S MUST BE IMPLEMENTED, SUCH AS GRAVEL BAGS OR SPECIALLY DESIGNED PLASTIC SKID CONTAINERS AROUND THE BASE TO PREVENT WASTES FROM CONTRIBUTING TO STORM WATER DISCHARGES. THE LOCATION OF SANITARY WASTE UNITS MUST BE IDENTIFIED ON THE EROSION CONTROL PLAN GRADING PHASE SHEET BY THE CONTRACTOR ONCE THE LOCATIONS HAVE BEEN DETERMINED.

SANITARY SEWER WILL BE PROVIDED BY MUNICIPAL AUTHORITY AT THE COMPLETION OF THE PROJECT.

HAZARDOUS WASTES:
ALL HAZARDOUS WASTE MATERIALS WILL BE DISPOSED OF IN THE MANNER SPECIFIED BY LOCAL STATE, AND/OR FEDERAL REGULATIONS AND BY THE MANUFACTURER OF SUCH PRODUCTS. THE JOB SITE SUPERINTENDENT WHO WILL ALSO BE RESPONSIBLE FOR SEEING THAT THESE PRACTICES ARE FOLLOWED, WILL INSTRUCT SITE PERSONNEL IN THESE PRACTICES. MATERIAL SAFETY DATA SHEETS FOR EACH SUBSTANCE WITH HAZARDEOUS PROPERTIES THAT IS USED ON THE JOB SITE WILL BE OBTAINED AND USED FOR THE PROPER MANAGEMENT OF POTENTIAL WASTES THAT MAY RESULT FROM THESE PRODUCTS. AN MSDS WILL BE POSTED IN THE IMMEDIATE AREA WHERE SUCH PRODUCT IS STORED AND/OR USED AND ANOTHER COPY OF EACH MSDS WILL BE MAINTAINED IN THE ESPCP FILE AT THE JOB SITE CONSTRUCTION TRAILER OFFICE. EACH EMPLOYEE WHO MUST HANDLE A SUBSTANCE WITH HAZARDOUS PROPERTIES WILL BE INSTRUCTED ON THE USE OF MSDS SHEETS AND THE SPECIFIC INFORMATION IN THE APPLICABLE MSDS FOR THE PRODUCT HE/SHE IS USING, PARTICULARLY REGARDING SPILL CONTROL TECHNIQUES.

BUILDING MATERIALS
NO BUILDING OR CONSTRUCTION MATERIALS WILL BE BURIED OR DISPOSED ON-SITE. ALL SUCH MATERIAL WILL BE DISPOSED OF IN PROPER WASTE DISPOSAL PROCEDURES.

THE CONTRACTOR WILL IMPLEMENT THE SPILL PREVENTION CONTROL AND COUNTERMEASURES LISTED WITHIN THIS ESPCP AND WILL TRAIN ALL PERSONNEL IN THE PROPER CLEANUP AND HANDLING OF SPILLED MATERIALS. NO SPILLED HAZARDOUS MATERIALS OR HAZARDOUS WASTE WILL BE ALLOWED TO COME IN CONTACT WITH STORMWATER DISCHARGES. IF SUCH CONTACT OCCURS, THE STORM- WATER DISCHARGE WILL BE CONTAINED ON SITE UNTIL APPROPRIATE MEASURES IN COMPLIANCE WITH STATE AND FEDERAL REGULATIONS ARE TAKEN TO DISPOSE OF SUCH CONTAMINATED STORMWATER. IT SHALL BE THE RESPONSIBILITY OF THE JOB SITE SUPERINTENDENT TO PROPERLY TRAIN ALL PERSONNEL IN THE USE OF THE SPILL PREVENTION CONTROL AND COUNTERMEASURES FOR ALL HAZARDOUS MATERIALS AND WASTE ON THE SITE.

SITE AREA:
± 1.79 ACRES

DISTURBED AREA:
± 0.99 ACRES (ONSITE)

24 HOUR CONTACT
CITY OF DACULA
BRITTNI NIX
BRITTNI.NIX@DACULAGA.GOV
770-963-7451

Bowman
Certificate of Authorization License No. LSF001241

Bowman Consulting Group Ltd
4174 Silver Peak Parkway
Suwanee, GA 30024
Phone: (770) 932-6550
www.bowman.com

© 2021 Bowman Consulting Group Ltd

EROSION CONTROL NOTES
2025 CDBG FOR CITY OF DACULA
SANJO STREET WIDENING, PAVING, DRAINAGE, AND SIDEWALK IMPROVEMENTS PROJECT
CITY OF DACULA, GA
GWINNETT COUNTY

CONSULTANT PROJECT #
200577-01-001

GEORGIA REGISTERED PROFESSIONAL ENGINEER #042897 VUONG Q. DANG
11/14/25

LEVEL II E&S CERT.#90012
EXP. DATE 12/19/2028

PLAN STATUS	
11/21/2025	BID SET

DATE	DESCRIPTION

KDW	RWH	SAD
DESIGN	DRAWN	CHKD

SCALE .
JOB No. 24-204(200577-01-001)
DATE : 11/14/2025
FILE No.
SHEET No. C500

THIS DOCUMENT, TOGETHER WITH THE CONCEPTS AND DESIGNS PRESENTED HEREIN, AS AN INSTRUMENT OF SERVICE, IS INTENDED ONLY FOR THE SPECIFIC PURPOSE AND CLIENT FOR WHICH IT WAS PREPARED. REUSE OF AND RELIANCE ON THIS DOCUMENT WITHOUT WRITTEN AUTHORIZATION AND ADAPTATION BY BOWMAN CONSULTING SHALL BE WITHOUT LIABILITY TO BOWMAN CONSULTING.

November 21, 2025
File Path:V:\200523 - City of Dacula\200523-01-001 (ENG) - Administrative Building\Engineering\Engineering Plans\SANJO SHEETS\200577-01-D SANJO C500 EROS.dwg

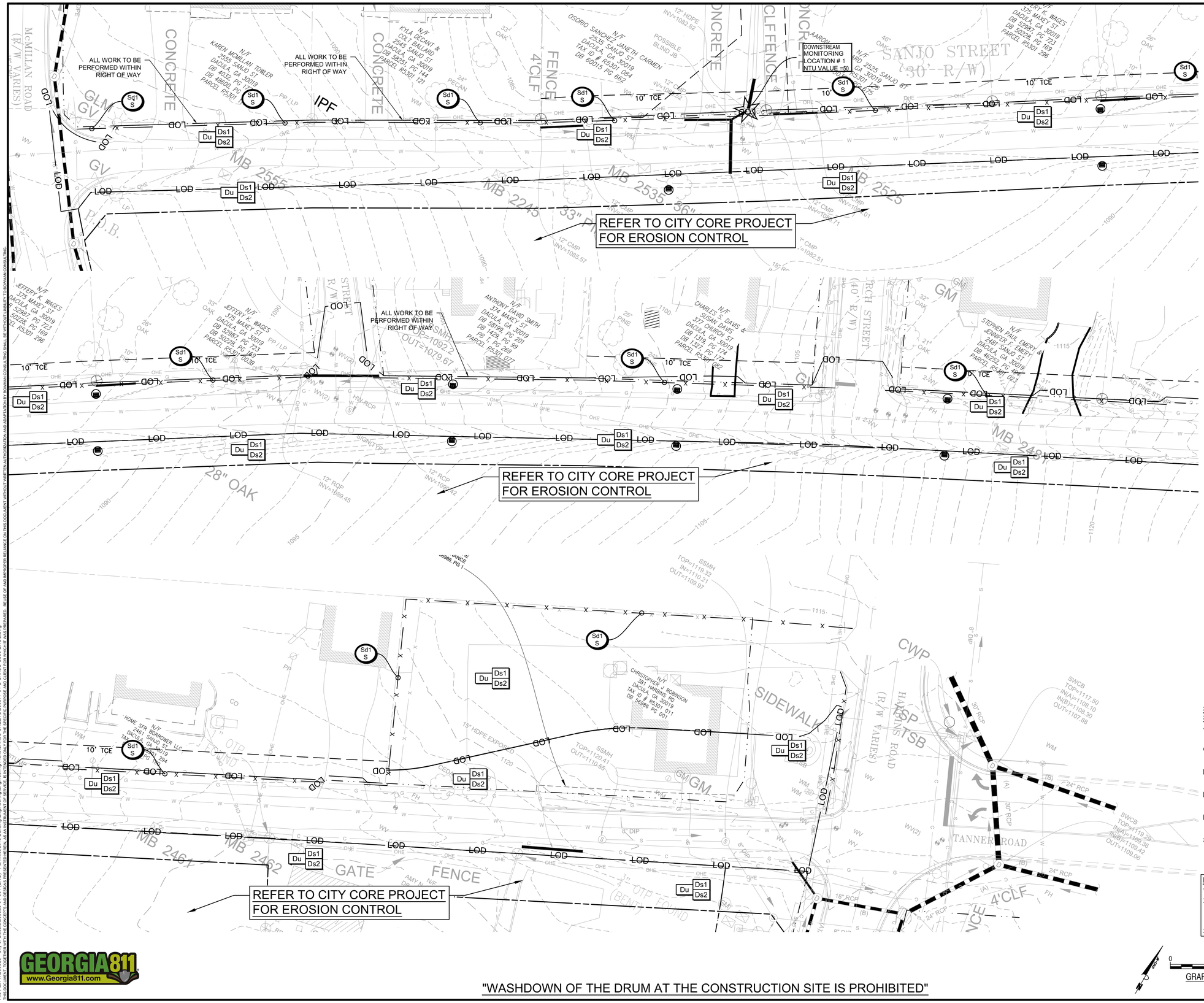

PHASE I - INITIAL CLEARING PHASE:

Erosion Control Notes

1. PRIOR TO THE LAND DISTURBING CONSTRUCTION, THE CONTRACTOR SHALL SCHEDULE A PRECONSTRUCTION MEETING WITH THE AREA SITE DEVELOPMENT INSPECTOR. THE CONTRACTOR SHALL OBSERVE THE PROJECT SEQUENCE SHOWN ON THE PLANS. THE CONTRACTOR SHALL MAINTAIN CAREFUL SCHEDULING AND PERFORMANCE TO INSURE THAT LAND STRIPPED OF ITS NATURAL COVER IS EXPOSED ONLY IN SMALL QUANTITIES.
2. THE CONTRACTOR AGREES TO PROVIDE AND MAINTAIN OFF-STREET PARKING ON THE SUBJECT PROPERTY DURING THE ENTIRE CONSTRUCTION PERIOD.
3. NO STAGING AREAS, MATERIAL STORAGE, CONCRETE WASH OUT AREAS, OR DEBRIS BURN AND BURIAL HOLES SHALL BE LOCATED WITHIN 500 FEET OF DESIGNATED TREE PROTECTION AREAS.
4. A COPY OF THE APPROVED LAND DISTURBANCE PLAN AND PERMIT SHALL BE PRESENT ON THE SITE AT ALL TIMES.
5. THE ESCAPE OF SEDIMENT FROM THE SITE SHALL BE PREVENTED BY THE INSTALLATION OF EROSION AND SEDIMENT CONTROL MEASURES AND PRACTICES PRIOR TO, OR CONCURRENT WITH, LAND-DISTURBING ACTIVITIES.
6. PRIOR TO COMMENCING LAND DISTURBANCE ACTIVITY, THE LIMITS OF LAND DISTURBANCE SHALL BE CLEARLY AND ACCURATELY DEMARCATED WITH STAKES, RIBBONS, OR OTHER APPROPRIATE MEANS. THE LOCATION AND EXTENT OF ALL AUTHORIZED LAND DISTURBANCE ACTIVITY SHALL BE DEMARCATED FOR THE DURATION OF THE CONSTRUCTION ACTIVITY. NO LAND DISTURBANCE SHALL OCCUR OUTSIDE THE APPROVED LIMITS INDICATED ON THE APPROVED PLANS.
7. PRIOR TO ANY OTHER CONSTRUCTION, A STABILIZED CONSTRUCTION ENTRANCE SHALL BE CONSTRUCTED AT EACH POINT OF ENTRY TO OR EXIT FROM THE SITE OR ONTO ANY PUBLIC ROADWAY.
8. THE FOLLOWING INITIAL EROSION CONTROL MEASURES SHALL BE IMPLEMENTED PRIOR TO ANY OTHER CONSTRUCTION ACTIVITY.
   - A. THE CONSTRUCTION EXITS, CONSISTING OF A MINIMUM PAD SIZE OF 20 FEET BY 50 FEET WITH A MINIMUM OF 6-INCH THICK STONE, SHALL BE PLACED AS SHOWN ON THE PLAN. THE STONE SIZE SHOULD CONSIST OF COURSE AGGREGATE BETWEEN 1-1/2" & 3-1/2" IN DIAMETER AND OVERLAID ON A GEOTEXTILE UNDERLINE. THE GEOTEXTILE UNDERLINE SHALL MEET THE REQUIREMENTS OF AASHTO M288-96, SECTION 7.3, SEPARATION REQUIREMENTS.
   - B. IMMEDIATELY AFTER THE ESTABLISHMENT OF CONSTRUCTION ENTRANCE / EXITS, ALL PERIMETER EROSION CONTROL AND STORM WATER MANAGEMENT DEVICES SHALL BE INSTALLED AS SHOWN ON THE CLEARING PHASE EROSION CONTROL PLAN.
   - C. TYPE "C" SILT FENCE SHOULD BE INSTALLED AT THE PERIMETER OF THE DISTURBED AREA AS SHOWN ON THE PLAN. THE SILT FENCE SHOULD BE PLACED IN ACCORDANCE WITH THE MANUAL FOR EROSION CONTROL IN GEORGIA, TABLE 6-202. THE SILT FENCE SHOULD BE KEPT ERECT AT ALL TIMES AND REPAIRED WHEN REQUESTED BY THE SITE INSPECTOR OR THE PROJECT DESIGN PROFESSIONAL OF RECORD. SILT SHOULD BE REMOVED WHEN ACCUMULATION REACHED ½ HEIGHT OF THE BARRIER. THE PERIMETER SILT FENCE SHOULD BE INSPECTED DAILY FOR ANY FAILURES. ANY FAILURES OF SAID FENCING SHOULD BE REPAIRED IMMEDIATELY.
   - D. INLET SEDIMENT PROTECTION MEASURES SHALL BE INSTALLED ON ALL EXISTING STORM STRUCTURES AS SHOWN ON THE PLAN. SEE SEPARATE DETAILS FOR SPECIFICS ON TYPE OF INLET PROTECTION SPECIFIED.
   - E. STONE CHECK DAMS SHALL BE INSTALLED IN AREAS OF CONCENTRATED FLOWS AS SHOWN ON THE PLAN.
   - F. TREE PROTECTION FENCING SHOULD BE INSTALLED PRIOR TO THE START OF ANY LAND DISTURBANCE ACTIVITY AND MAINTAINED UNTIL FINAL LANDSCAPE IS INSTALLED. THE TREE PROTECTION FENCING SHOULD BE INSPECTED DAILY. ANY FAILURES OF SAID FENCING SHOULD BE REPAIRED IMMEDIATELY.
9. AFTER INSTALLATION OF INITIAL EROSION CONTROL MEASURES THE SITE CONTRACTOR SHALL SCHEDULE AN INSPECTION BY THE PROJECT DESIGN PROFESSIONAL. NO OTHER CONSTRUCTION ACTIVITIES SHALL OCCUR UNTIL THE PROJECT DESIGN PROFESSIONAL APPROVES THE INSTALLATION OF SAID EROSION CONTROL MEASURES. IF UNFORESEEN CONDITIONS EXIST IN THE FIELD THAT WARRANT ADDITIONAL EROSION CONTROL MEASURES, THE CONTRACTOR MUST CONSTRUCT ANY ADDITIONAL EROSION CONTROL DEVICES DEEMED NECESSARY BY THE SITE INSPECTOR. AFTER APPROVAL OF THE INITIAL EROSION CONTROL INSTALLATION, THE CONTRACTOR MAY PROCEED WITH CLEARING AND GRUBBING ACTIVITIES. AS CLEARING PERMITS THE CONTRACTOR SHALL CONSTRUCT TEMPORARY SEDIMENT PONDS AND DIVERSION DIKES AS SHOWN ON THE CLEARING PHASE PLAN TO CONTROL EROSION AND STORM WATER RUN OFF.
10. THE CONTRACTOR CAN UTILIZE CLEARED TREES AS BARRIER BRUSH SEDIMENT CONTROL IN AREAS SHOWN ON PLAN WHERE INITIAL GRADING ACTIVITIES WILL NOT OCCUR.
11. NO BURN OR BURY PITS SHALL BE PERMITTED ON THE CONSTRUCTION SITE.
12. ADDITIONAL SILT BARRIERS MUST BE PLACED AS SHOWN ON THE PLAN AS ACCESS IS OBTAINED DURING CLEARING. NO GRADING SHALL TAKE PLACE UNTIL SILT BARRIER INSTALLATION AND SEDIMENT PONDS ARE CONSTRUCTED AS SHOWN ON THE CLEARING PHASE EROSION CONTROL PLAN.
13. ALL SILT FENCE MUST MEET THE REQUIREMENTS OF SECTION 171-TEMPORARY SILT FENCE FOR THE DEPARTMENT OF TRANSPORTATION, STATE OF GEORGIA, STANDARD SPECIFICATIONS, 1983 EDITION.
14. ALL ITEMS IN THIS SECTION OF THE SPECIFICATION SHALL MEET THE REQUIREMENTS AS SET FORTH IN SECTION 161, 162, 163, AND 164 OF THE GEORGIA D.O.T STANDARD SPECIFICATIONS FOR ROADS AND BRIDGES.
15. MULCH OR TEMPORARY GRASSING SHALL BE APPLIED TO ALL EXPOSED AREAS WITHIN 7 DAYS OF LAND DISTURBANCE.
16. ALL DISTURBED AREAS LEFT MULCHED AFTER 30 DAYS SHALL BE STABILIZED WITH TEMPORARY VEGETATION.
17. SEDIMENT AND EROSION CONTROL MEASURES SHOULD BE CHECKED AFTER EACH RAIN EVENT. EACH DEVICE IS TO BE MAINTAINED OR REPLACED IF SEDIMENT ACCUMULATION HAS REACHED ONE HALF THE CAPACITY OF THE DEVICE. ADDITIONAL DEVICES MUST BE INSTALLED IF NEW CHANNELS HAVE DEVELOPED. THE CONSTRUCTION EXIT SHALL BE MAINTAINED IN A CONDITION WHICH WILL PREVENT TRACK OR FLOW OF MUD ONTO PUBLIC RIGHT-OF-WAY. THIS MAY REQUIRE PERIODIC TOP DRESSING WITH 1" - 3" OF STONE, AS CONDITIONS DEMAND. ALL MATERIALS SPILLED, DROPPED, WASHED, OR TRACKED FROM VEHICLE ONTO PUBLIC ROADWAY OR INTO STORM DRAIN MUST BE REMOVED IMMEDIATELY.
18. CONTRACTOR SHALL INSPECT CONTROL MEASURES AT THE END OF EACH WORKING DAY TO ENSURE MEASURES ARE FUNCTIONING PROPERLY.
19. EROSION CONTROL MEASURES WILL BE MAINTAINED AT ALL TIMES. IF FULL IMPLEMENTATION OF THE APPROVED PLAN DOES NOT PROVIDE FOR EFFECTIVE EROSION CONTROL, ADDITIONAL EROSION AND SEDIMENT CONTROL MEASURES SHALL BE IMPLEMENTED TO CONTROL OR TREAT THE SEDIMENT SOURCE AS DIRECTED BY THE ON SITE INSPECTOR OR THE CIVIL ENGINEER.
20. FAILURE TO INSTALL, OPERATE, OR MAINTAIN ALL EROSION CONTROL MEASURES WILL RESULT IN ALL CONSTRUCTION BEING STOPPED ON THE JOB UNTIL SUCH MEASURES ARE CORRECTED BACK TO THE APPROVED EROSION CONTROL PLANS.

SOIL SERIES INFORMATION:

SYMBOL	NAME
AmC2	APPLING SANDY LOAM, 6 TO 10 PERCENT SLOPES, MODERATELY ERODED
GeC2	GWINNETT CLAY LOAM, 6 TO 10 PERCENT SLOPES, ERODED
PfB2	PACOLET SANDY LOAM, 2 TO 6 PERCENT SLOPES, MODERATELY ERODED
PfC2	PACOLET SANDY LOAM, 6 TO 10 PERCENT SLOPES, MODERATELY ERODED
PgB2	PACOLET SANDY CLAY LOAM, 2 TO 6 PERCENT SLOPES, MODERATELY ERODED

SOURCE: NATURAL RESOURCES CONSERVATION SERVICE WEB SOILS SURVEY HTTP://WEBSOILSURVEY.NRCS.USDA.GOV

DISTURBED AREA / DRAINAGE AREA: 0.99 AC / 1.79 AC

1. REQUIRED STORAGE: 0.99 AC * 67 CY/AC = 66.33 CY
2. STORAGE PROVIDED BY Sd-2F EXCAVATED.
   - 2.1. 14 EA @ 7' WIDE x 14' LONG x 3' DEEP
   - 2.2. 14 EA @ 10.89 CY STORAGE = 152.44 CY
3. PROVIDED STORAGE: 152.44 CY

GRAPHIC SCALE 1"=20' (0, 20', 40')

24 HOUR CONTACT
CITY OF DACULA
BRITTNI NIX
BRITTNI.NIX@DACULAGA.GOV
770-963-7451

GEORGIA811 www.Georgia811.com

Bowman
Certificate of Authorization License No. LSF001241

Bowman Consulting Group Ltd
4174 Silver Peak Parkway
Suwanee, GA 30024
Phone: (770) 932-6550
www.bowman.com

© 2021 Bowman Consulting Group Ltd

EROSION CONTROL PLAN PHASE I
2025 CDBG FOR CITY OF DACULA
SANJO STREET WIDENING, PAVING, DRAINAGE, AND SIDEWALK IMPROVEMENTS PROJECT
CITY OF DACULA, GA
GWINNETT COUNTY

CONSULTANT PROJECT # 200577-01-001

GEORGIA REGISTERED PROFESSIONAL ENGINEER VUONG G. DANG 11/21/25

LEVEL II E&S CERT.#00012
EXP. DATE 12/19/2028

PLAN STATUS	
11/21/2025	BID SET

DATE	DESCRIPTION	
KDW	RWH	SAD
DESIGN	DRAWN	CHKD

SCALE .
JOB No. 24-204(200577-01-001)
DATE : 11/14/2025
FILE No.
SHEET No. C510

November 21, 2025
File Path:V:\200523 - City of Dacula\200523-01-001 (ENG) - Administrative Building\Engineering\Engineering Plans\SANJO SHEETS\200577-01-D SANJO C500 EROS.dwg
THIS DOCUMENT, TOGETHER WITH THE CONCEPTS AND DESIGNS PRESENTED HEREIN, IS AN INSTRUMENT OF SERVICE. IS INTENDED ONLY FOR THE SPECIFIC PURPOSE AND CLIENT FOR WHICH IT WAS PREPARED. REUSE OF AND BYPASSER RELIANCE ON THIS DOCUMENT WITHOUT WRITTEN AUTHORIZATION AND ADAPTATION BY BOWMAN CONSULTING SHALL BE WITHOUT LIABILITY TO BOWMAN CONSULTING.

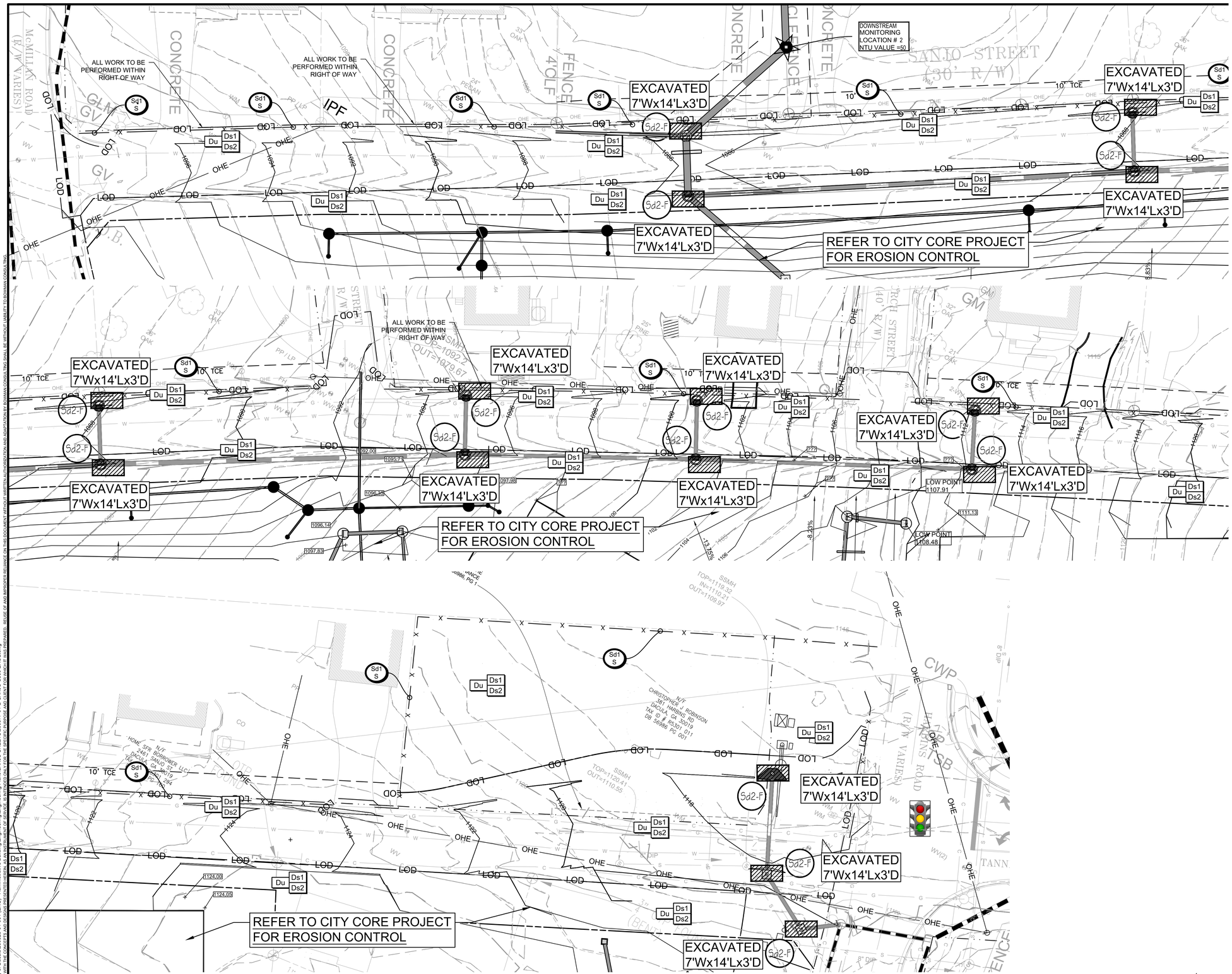

PHASE II - GRADING PHASE:

Erosion Control Notes

1. DURING CONSTRUCTION, THE CONTRACTOR SHALL MAINTAIN CAREFUL SCHEDULING AND PERFORMANCE TO ENSURE THAT LAND STRIPPED OF IT'S NATURAL GROUND COVER IS EXPOSED ONLY IN SMALL QUANTITIES AND THEREFORE LIMITED DURATIONS, BEFORE PERMANENT EROSION PROTECTION IS ESTABLISHED. NOTE SUB PHASES SHOWN ON PLANS.
2. EARTHWORK OPERATIONS IN THE VICINITY OF STREAM BUFFERS SHALL BE CAREFULLY CONTROLLED TO AVOID DUMPING OR SLOUGHING INTO THE BUFFER AREAS.
3. THE FOLLOWING EROSION CONTROL MEASURES SHALL BE IMPLEMENTED DURING PRELIMINARY GRADING PHASE OF CONSTRUCTION.
4. SEDIMENT SHALL NOT BE WASHED IN INLETS. IT SHALL BE REMOVED FROM THE SEDIMENT TRAPS AND DISPOSED OF AND STABILIZED SO THAT IT WILL NOT ENTER THE INLETS AGAIN.
5. EROSION CONTROL DEVICES SHALL BE INSTALLED IMMEDIATELY AFTER GROUND DISTURBANCE OCCURS. THE LOCATION OF SOME OF THE EROSION CONTROL DEVICES MAY HAVE TO BE ALTERED FROM THAT SHOWN ON THE APPROVED PLANS IF DRAINAGE PATTERNS DURING CONSTRUCTION ARE DIFFERENT FROM THE PROPOSED DRAINAGE PATTERNS. IT IS THE CONTRACTOR'S RESPONSIBILITY TO ACCOMPLISH EROSION CONTROL FOR ALL DRAINAGE PATTERNS CREATED AT VARIOUS STAGES DURING CONSTRUCTION. ANY DIFFICULTY IN CONTROLLING EROSION DURING ANY PHASE OF CONSTRUCTION SHALL BE REPORTED TO THE DESIGN PROFESSIONAL IMMEDIATELY.
6. THE CONTRACTOR SHALL FURNISH AND MAINTAIN ALL NECESSARY BARRICADED WHILE ROADWAY FRONTAGE IMPROVEMENTS ARE BEING MADE.
7. TYPE "A" SILT FENCE SHOULD BE INSTALLED AT THE TOE OF ALL FILL SLOPES 10 FEET, OR GREATER, IN HEIGHT. THE SILT FENCE SHOULD BE PLACED IN ACCORDANCE WITH THE MANUAL FOR EROSION CONTROL IN GEORGIA, TABLE 6-20.2.
8. THE SILT FENCE SHALL BE MAINTAINED UNTIL PERMANENT GROUND COVER IS ESTABLISHED ON THE SLOPE. SILT SHALL BE REMOVED WHEN ACCUMULATION REACHES ½ HEIGHT OF THE BARRIER. ADDITIONALLY, DIVERSION DYKES SHALL BE CONSTRUCTED ALONG THE TOP OF ALL SAID FILL SLOPES WITH THE USE OF TEMPORARY DOWN DRAINS TO CONTROL STORM WATER RUN OFF AS SHOWN ON THE PLANS. SEE SEPARATE DETAILS FOR ADDITIONAL INFORMATION. THE CONTRACTOR SHALL BE RESPONSIBLE FOR ESTABLISHING BARRIERS AT THE TOE OF SLOPES UNDER CONSTRUCTION. THESE BARRIERS SHALL BE AS SHOWN IN THE PLANS. THESE BARRIERS MAY BE RELOCATED AND REUSED AFTER PERMANENT SLOPE STABILIZATION BECOMES FULLY ESTABLISHED, AS THEY ARE RELOCATED, ANY DEFECTIVE MATERIALS IN THE BARRIER SHALL BE REPLACED. IN ADDITION, ALL DEBRIS AND SILT AT THE PREVIOUS LOCATION SHALL BE REMOVED.
9. CUT AND FILL SLOPES ARE NOT TO EXCEED "2H:1V".
10. ALL SLOPES STEEPER THAN 2.5:1 AND WITH A HEIGHT OF 10 FEET OR GREATER, AND CUTS AND FILLS WITHIN STREAM BUFFERS, SHALL BE STABILIZED WITH APPROPRIATE EROSION CONTROL MATING OR BLANKETS, SEE SEPARATE DETAILS FOR ADDITIONAL INFORMATION.
11. TYPE "A" SILT FENCE SHALL BE PLACED AT THE TOE OF ALL DIRT STOCK PILE AREAS, SEE SEPARATE DETAILS FOR ADDITIONAL INFORMATION.
12. INLET SEDIMENT PROTECTION MEASURES SHALL BE INSTALLED ON ALL STORM STRUCTURES AS THEY ARE CONSTRUCTED. SEE PLAN VIEW FOR SPECIFIC TYPE AND SEPARATE DETAILS FOR ADDITIONAL INFORMATION ON TYPE OF INLET PROTECTION SPECIFIED.
13. STORM DRAIN OUTLET PROTECTION SHALL BE PLACED AT ALL OUTLET HEADWALLS AS SOON AS THE HEADWALL IS CONSTRUCTED. SEE SEPARATE DETAILS FOR ADDITIONAL INFORMATION.
14. STONE CHECK DAMS SHALL BE INSTALLED IN AREAS OF CONCENTRATED FLOWS AS SHOWN ON THE PLAN, SEE SEPARATE DETAIL FOR ADDITIONAL INFORMATION. ALL GRADED AREAS SHALL BE APPLIED WITH VEGETATIVE COVER AS SOON AS FINAL GRADE IS ACHIEVED.
15. MULCH OR TEMPORARY GRASSING SHALL BE APPLIED TO ALL EXPOSED AREAS WITHIN 7 DAYS OF LAND DISTURBANCE.
16. ALL DISTURBED AREAS LEFT MULCHED AFTER 30 DAYS SHALL BE STABILIZED WITH TEMPORARY GRASSING.
17. AFTER PRELIMINARY GRADING ACTIVITIES, THE CONTRACTOR SHALL CONSTRUCT TEMPORARY SEDIMENT BASINS AND DIVERSION DYKES AS SHOWN ON PLAN. THE CONTRACTOR SHALL MAINTAIN THE SEDIMENT BASINS UNTIL PERMANENT GROUND COVER IS ESTABLISHED. SEDIMENT SHALL BE CLEANED OUT OF THE BASINS WHEN IT REACHES THE 1/3 VOLUME OF BASIN, SEE SEPARATE DETAILS FOR ADDITIONAL INFORMATION.
18. SEDIMENT AND EROSION CONTROL MEASURES SHOULD BE CHECKED AFTER EACH RAIN EVENT. EACH DEVICE IS TO BE MAINTAINED OR REPLACED IF SEDIMENT ACCUMULATION HAS REACHED ONE HALF THE CAPACITY OF THE DEVICE. ADDITIONAL DEVICES MUST BE INSTALLED IF NEW CHANNELS HAVE DEVELOPED. THE CONSTRUCTION EXIT SHALL BE MAINTAINED IN A CONDITION WHICH WILL PREVENT TRACK OF FLOW OF MUD ONTO PUBLIC RIGHT-OF-WAY. THIS MAY REQUIRE PERIODIC TOP DRESSING WITH 1" - 3" OF STONE. AS CONDITIONS DEMAND, ALL MATERIALS SPILLED, DROPPED, WASHED, OR TRACKED FROM VEHICLE ONTO PUBLIC ROADWAY OR INTO STORM DRAIN MUST BE REMOVED IMMEDIATELY. THE CONTRACTOR SHALL INSPECT CONTROL MEASURES AT THE END OF EACH WORKING DAY TO ENSURE MEASURES ARE FUNCTIONING PROPERLY.
19. EROSION CONTROL MEASURES WILL BE MAINTAINED AT ALL TIMES. IF FULL IMPLEMENTATION OF THE APPROVED PLAN DOES NOT PROVIDE FOR EFFECTIVE EROSION CONTROL, ADDITIONAL EROSION AND SEDIMENT CONTROL MEASURES SHALL BE IMPLEMENTED TO CONTROL OR TREAT THE SEDIMENT SOURCE AS DIRECTED BY THE ON SITE INSPECTOR OR THE CIVIL ENGINEER.
20. FAILURE TO INSTALL, OPERATE OR MAINTAIN ALL EROSION CONTROL MEASURES WILL RESULT IN ALL CONSTRUCTION BEING STOPPED ON THE JOB UNTIL SUCH MEASURES ARE CORRECTED BACK TO THE APPROVED EROSION CONTROL PLANS.

Critical AREAS:

Erosion Control Notes

1.) CRITCAL AREAS SHOWN ON GRADING PHASE EROSION CONTROL PLANS SHALL BE MAINTAINED DAILY. AT THE END OF EACH WORK DAY ALL SLOPES 2:1 OR STEEPER, AND HIGHER THAN 5 FEET SHALL RECEIVE SURFACE ROUGHENING, POLYMERS, AND EROSION CONTROL MATTING. ADDITIONALLY, ALL FILL SLOPES SHALL RECEIVE A DIVERSION DYKE AND TEMPORARY DOWN DRAINS ALONG THE TOP OF THE SLOPE PREVENTING DRAINAGE SPILLING OVER THE EDGE AND DOWN THE FACE OF THE SLOPE. THE TEMPORARY DOWN DRAINS SHALL BE CONSTRUCTED WITH PERFORATED STAND PIPES AT THE TOP OF THE SLOPE AND RECONSTRUCTED EACH DAY AS THE SLOPE INCREASES IN HEIGHT.

DISTURBED AREA / DRAINAGE AREA: 0.99 AC / 1.79 AC
1. REQUIRED STORAGE: 0.99 AC * 67 CY/AC = 66.33 CY
2. STORAGE PROVIDED BY Sd-2F EXCAVATED.
   2.1. 14 EA @ 7' WIDE x 14' LONG x 3' DEEP
   2.2. 14 EA @ 10.89 CY STORAGE = 152.44 CY
3. PROVIDED STORAGE: 152.44 CY

GRAPHIC SCALE 1"=20' (0, 20', 40')

24 HOUR CONTACT
CITY OF DACULA
BRITTNI NIX
BRITTNI.NIX@DACULAGA.GOV
770-963-7451

"WASHDOWN OF THE DRUM AT THE CONSTRUCTION SITE IS PROHIBITED"

GEORGIA811 www.Georgia811.com

Bowman
Certificate of Authorization License No. LSF001241

Bowman Consulting Group Ltd
4174 Silver Peak Parkway
Suwanee, GA 30024
Phone: (770) 932-6550
www.bowman.com

© 2021 Bowman Consulting Group Ltd

EROSION CONTROL PLAN PHASE II
2025 CDBG FOR CITY OF DACULA
SANJO STREET WIDENING, PAVING, DRAINAGE, AND SIDEWALK IMPROVEMENTS PROJECT
CITY OF DACULA, GA
GWINNETT COUNTY

CONSULTANT PROJECT # 200577-01-001

GEORGIA REGISTERED PROFESSIONAL ENGINEER PE042897 VUONG Q. DANG
11/21/25

LEVEL II E&S CERT.#00012
EXP. DATE 12/9/2028

PLAN STATUS	
11/21/2025	BID SET

DATE	DESCRIPTION	
KDW DESIGN	RWH DRAWN	SAD CHKD

SCALE .
JOB No. 24-204(200577-01-001)
DATE : 11/14/2025
FILE No.
SHEET No. C520

November 21, 2025
File Path V:\200523_City of Dacula\200523-01-001 (ENG) - Administrative Building\Engineering\Engineering Plans\SANJO SHEETS\200577-01-D SANJO C500 EROS.dwg
THIS DOCUMENT, TOGETHER WITH THE CONCEPTS AND DESIGNS PRESENTED HEREIN, IS INTENDED ONLY FOR THE SPECIFIC PURPOSE AND CLIENT FOR WHICH IT WAS PREPARED. REUSE OF AND IMPROPER RELIANCE ON THIS DOCUMENT WITHOUT WRITTEN AUTHORIZATION AND ADAPTATION BY BOWMAN CONSULTING SHALL BE WITHOUT LIABILITY TO BOWMAN CONSULTING.

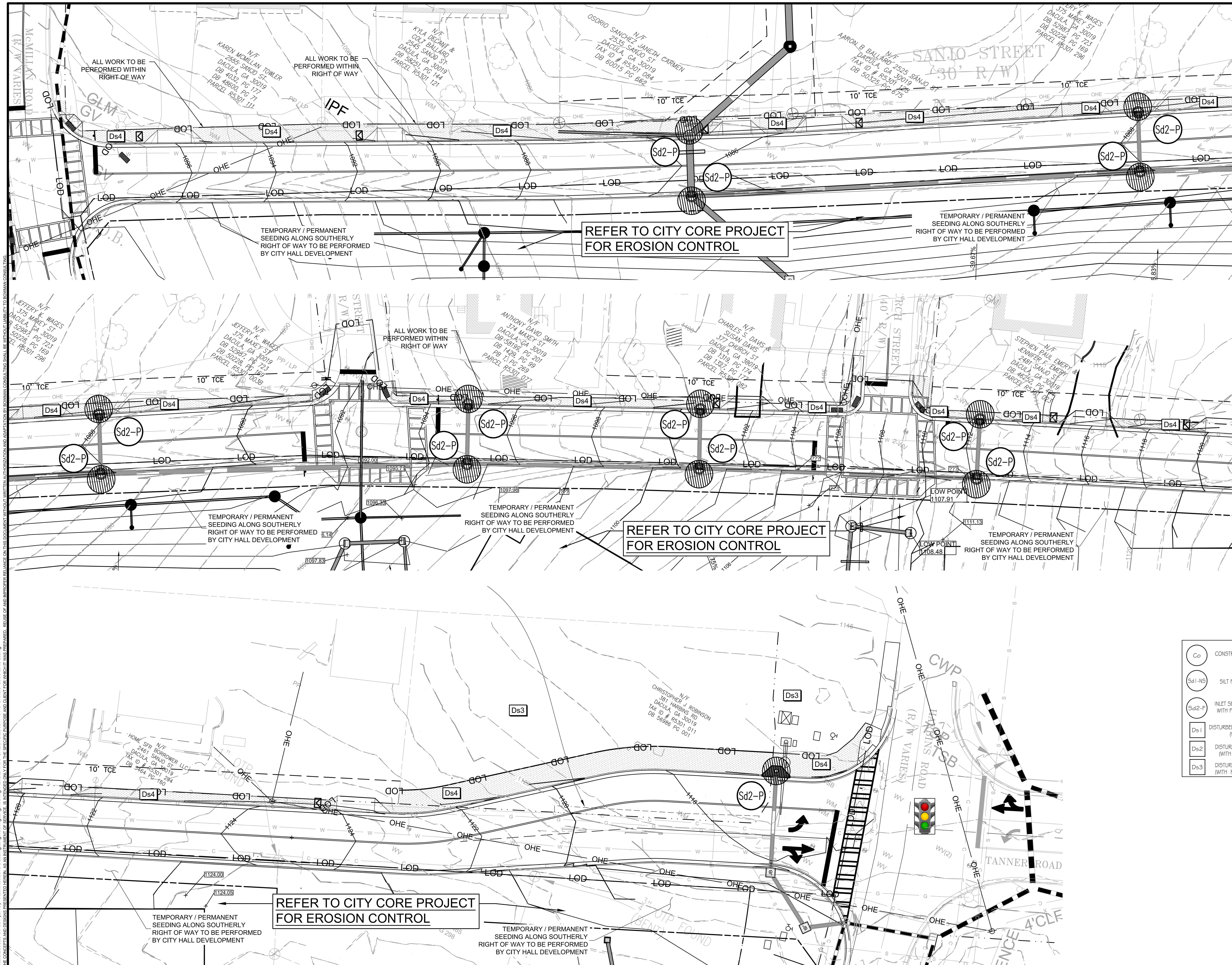

"WASHDOWN OF THE DRUM AT THE CONSTRUCTION SITE IS PROHIBITED"

DURING PHASE III, TEMPORARY SEDIMENT STORAGE WILL BE IN STORMWATER MANAGEMENT FACILITIES.

PHASE III - FINAL STABILIZATION PHASE:

Erosion Control Notes

1. THE FOLLOWING EROSION CONTROL MEASURES SHALL BE IMPLEMENTED DURING THE FINAL EROSION CONTROL PHASE OF CONSTRUCTION. SEDIMENT SHALL NOT BE WASHED INTO INLETS. IT SHALL BE REMOVED FROM THE SEDIMENT TRAPS AND DISPOSED OF AND STABILIZED SO THAT IT WILL NOT ENTER THE INLETS AGAIN. MULCH OR TEMPORARY GRASSING SHALL BE APPLIED TO ALL EXPOSED AREAS WITHIN 7 DAYS OF LAND DISTURBANCE. ALL DISTURBED AREAS LEFT MULCHED AFTER 30 DAYS SHALL BE STABILIZED WITH PERMANENT GRASSING.
2. THE CONTRACTOR SHALL MAINTAIN ALL SEDIMENT BASINS AND EROSION CONTROL MEASURES UNTIL PERMANENT GROUND COVER IS ESTABLISHED. SEDIMENT SHALL BE CLEANED OUT OF THE BASINS WHEN IT BECOMES 1/3 FULL.
3. AFTER CURBING, GRADED AGGREGATE BASE AND PAVEMENT HAS BEEN INSTALLED, ALL INLET SEDIMENT TRAPS ON SINGLE AND DOUBLE WING CATCH BASINS ALONG WITH ANY CURB INLETS SHALL BE REMOVED AND REPLACED WITH CURB FILTER INLET PROTECTION. SEE SEPARATE DETAIL FOR ADDITIONAL INFORMATION. ALL ROADWAY AND PARKING SHOULDERS SHOULD BE APPLIED WITH VEGETATIVE COVER AS SOON AS FINAL GRADE IS ACHIEVED BEHIND CURBS.
4. SEDIMENT AND EROSION CONTROL MEASURES SHOULD BE CHECKED AFTER EACH RAIN EVENT. EACH DEVICE IS TO BE MAINTAINED OR REPLACED IF SEDIMENT ACCUMULATION HAS REACHED ONE HALF THE CAPACITY OF THE DEVICE.
5. ADDITIONAL DEVICES MUST BE INSTALLED IF NEW CHANNELS HAVE DEVELOPED. THE CONSTRUCTION EXIT SHALL BE REMOVED IN A CONDITION WHICH WILL PREVENT TRACK OR FLOW OF MUD ONTO PUBLIC RIGHT-OF-WAY. ALL MATERIALS SPILLED, DROPPED, WASHED, OR TRACKED FROM VEHICLE ONTO PUBLIC ROADWAY OR INTO STORM DRAIN MUST BE REMOVED IMMEDIATELY.
6. THE CONTRACTOR SHALL INSPECT CONTROL MEASURES AT THE END OF EACH WORKING DAY TO ENSURE MEASURES ARE FUNCTIONING PROPERLY.
7. EROSION CONTROL MEASURES WILL BE MAINTAINED AT ALL TIMES. IF ULL IMPLEMENTATION OF THE APPROVED PLAN DOES NOT PROVIDE FOR EFFECTIVE EROSION CONTROL, ADDITIONAL EROSION AND SEDIMENT CONTROL MEASURES SHALL BE IMPLEMENTED TO CONTROL OR TREAT THE SEDIMENT SOURCE AS DIRECTED BY THE ON SITE INSPECTOR OR THE CIVIL ENGINEER.
8. FAILURE TO INSTALL, OPERATE, OR MAINTAIN ALL EROSION CONTROL MEASURES WILL RESULT IN ALL CONSTRUCTION BEING STOPPED ON THE JOB UNTIL SUCH MEASURES ARE CORRECTED BACK TO THE APPROVED EROSION CONTROL PLANS.
9., UPON COMPLETION OF THE PROJECT AND RECEIPT OF CERTIFICATE OF OCCUPANCY, THE CONTRACTOR SHALL REMOVE ALL TEMPORARY EROSION CONTROL MEASURES AND DISPOSE OF THEM UNLESS NOTED ON PLANS.

Critical AREAS:

Erosion Control Notes

1.) CRITCAL AREAS SHOWN ON FINAL PHASE EROSION CONTROL PLANS SHALL BE MAINTAINED DAILY. AT THE END OF EACH WORK DAY ALL SLOPES 2:1 OR STEEPER, AND HIGHER THAN 5 FEET SHALL RECEIVE SURFACE ROUGHENING, POLYMERS, AND EROSION CONTROL MATTING. ADDITIONALLY, ALL FILL SLOPES SHALL RECEIVE A DIVERSION DYKE AND TEMPORARY DOWN DRAINS ALONG THE TOP OF THE SLOPE PREVENTING DRAINAGE SPILLING OVER THE EDGE AND DOWN THE FACE OF THE SLOPE. THE TEMPORARY DOWN DRAINS SHALL BE CONSTRUCTED WITH PERFORATED STAND PIPES AT THE TOP OF THE SLOPE AND RECONSTRUCTED EACH DAY AS THE SLOPE INCREASES IN HEIGHT. ONCE FINAL STABILIZATION OF THE SITE IS COMPLETE, ALL TEMPORARY EROSION CONTROL MEASURES SHALL BE REMOVED BEFORE THE CONTRACTOR PERMANENTLY LEAVES THE SITE.

EROSION CONTROL LEGEND

Symbol	Description	Symbol	Description
Co	CONSTRUCTION EXIT	St	RIP-RAP OUTLET PROTECTION
Sd1-NS	SILT FENCE	Sd3	TEMPORARY SEDIMENT BASIN
Sd2-F	INLET SEDIMENT TRAP WITH FILTER FABRIC	Sd2-P	INLET SEDIMENT TRAP "PIGS-IN-BLANKET"
Ds1	DISTURBED AREA STABILIZATION (WITH MULCH)	Du	DUST CONTROL
Ds2	DISTURBED AREA STABILIZATION (WITH TEMPORARY SEEDING)	Ss	SLOPE STABILIZATION
Ds3	DISTURBED AREA STABILIZATION (WITH PERMANENT VEGETATION)		

DISTURBED AREA / DRAINAGE AREA: 0.99 AC / 1.79 AC

1. REQUIRED STORAGE: 0.99 AC * 67 CY/AC = 66.33 CY
2. STORAGE PROVIDED BY Sd-2F EXCAVATED.
   - 2.1. 14 EA @ 7' WIDE x 14' LONG x 3' DEEP
   - 2.2. 14 EA @ 10.89 CY STORAGE = 152.44 CY
3. PROVIDED STORAGE: 152.44 CY

GRAPHIC SCALE 1"=20'

0 20' 40'

24 HOUR CONTACT
CITY OF DACULA
BRITTNI NIX
BRITTNI.NIX@DACULAGA.GOV
770-963-7451

GEORGIA811 www.Georgia811.com

Bowman

Certificate of Authorization License No. LSF001241

Bowman Consulting Group Ltd
4174 Silver Peak Parkway
Suwanee, GA 30024
Phone: (770) 932-6550
www.bowman.com

© 2021 Bowman Consulting Group Ltd

EROSION CONTROL PLAN PHASE III
2025 CDBG FOR CITY OF DACULA

SANJO STREET WIDENING, PAVING, DRAINAGE, AND SIDEWALK IMPROVEMENTS PROJECT

CITY OF DACULA, GA — GWINNETT COUNTY

CONSULTANT PROJECT # 200577-01-001

GEORGIA REGISTERED PROFESSIONAL ENGINEER PE042537 VUONG Q. DANG 11/21/25

LEVEL II E&S CERT.#90012
EXP. DATE 12/19/2028

PLAN STATUS	
11/21/2025	BID SET
DATE	DESCRIPTION

KDW	RWH	SAD
DESIGN	DRAWN	CHKD

SCALE .

JOB No. 24-204(200577-01-001)

DATE : 11/14/2025

FILE No.

SHEET No. C530

November 21, 2025

File Path V:\200523 - City of Dacula\200523-01-001 (ENG) - Administrative Building\Engineering\Engineering Plans\SANJO SHEETS\200577-01-D SANJO C500 EROS.dwg

THIS DOCUMENT, TOGETHER WITH THE CONCEPTS AND DESIGNS PRESENTED HEREIN, AS AN INSTRUMENT OF SERVICE, IS INTENDED ONLY FOR THE SPECIFIC PURPOSE AND CLIENT FOR WHICH IT WAS PREPARED. REUSE OF AND IMPROPER RELIANCE ON THIS DOCUMENT WITHOUT WRITTEN AUTHORIZATION AND ADAPTATION BY BOWMAN CONSULTING SHALL BE WITHOUT LIABILITY TO BOWMAN CONSULTING.

DEFINITION
APPLYING PLANT RESIDUES OR OTHER SUITABLE MATERIALS, PRODUCED ON THE SITE OF POSSIBLE, TO THE SOIL SURFACE.

REQUIREMENT FOR REGULATORY COMPLIANCE
MULCH OR TEMPORARY GRASSING SHALL BE APPLIED TO ALL EXPOSED AREAS WITHIN 14 DAYS OF DISTURBANCE. MULCH CAN BE USED AS A SINGULAR EROSION CONTROL DEVICE FOR UP TO SIX MONTHS, BUT IT SHALL BE APPLIED ST THE APPROPRIATE DEPTH, DEPENDING ON THE MATERIAL USED, ANCHORED AND HAVE A CONTINUOUS 90% COVER OR GREATER OF THE SOIL. MAINTENANCE SHALL BE REQUIRED TO MAINTAIN APPROPRIATE DEPTH AND 90% COVE. TEMPORARY VEGETATION MAY BE EMPLOYED INSTEAD OF MUCH IF THE AREA WILL REMAIN UNDISTURBED FOR LESS THAN SIX MONTHS. IF ANY AREA WILL REMAIN UNDISTURBED FOR GREATER THAN SIX MONTHS, PERMANENT VEGETATIVE TECHNIQUES SHALL BE EMPLOYED. REFER TO Ds2 - DISTURBED AREA STABILIZATION (WITH TEMPORARY SEEDING), Ds3 - DISTURBED AREA STABILIZATION (WITH PERMANENT SEEDING), Ds4 - DISTURBED AREA STABILIZATION (WITH PERMANENT SODDING).

SPECIFICATIONS
MULCHING WITHOUT SEEDING; THIS STANDARD APPLIES TO GRADED OR CLEARED AREAS WHERE SEEDINGS MAY NOT HAVE A SUITABLE GROWING SEASON TO PRODUCE AN EROSION RETARDANT COVER, BUT CAN BE STABILIZED WITH A MULCH COVER.

SITE PREPARATION
1. GRADE TO PERMIT THE USE OF EQUIPMENT FOR APPLYING AND ANCHORING MULCH.
2. INSTALL NEEDED EROSION CONTROL MEASURES AS REQUIRED SUCH AS DIKES, DIVERSIONS, BERMS, TERRACES AND SEDIMENT BARRIERS.
3. LOOSEN COMPACT SOIL TO A MINIMUM DEPTH OF 3 INCHES.

MULCHING MATERIALS
SELEC ONE OF THE FOLLOWING MATERIALS AND APPLY AT THE DEPTH INDICATED;
1. DRY STRAW OR HAY SHALL BE APPLIED AT A DEPTH OF 2 TO 4 INCHES PROVIDING COMPLETE SOIL COVER-AGE. ONE ADVANTAGE OF THIS MATERIAL IS EASY APPLICATION.
2. WOOD WASTE (CHIPS, SAWDUST OR BARK) SHALL BE APPLIED AT A DEPTH OF 2 TO 3 INCHES. ORGANIC MATERIAL FROM THE CLEARING STAGE OF DEVELOPMENT SHOULD REMAIN ON SITE, BE CHIPPED, AND APPLIED AS MULCH. THIS METHOD OF MULCHING CAN GREATLY REDUCE EROSION CONTROL COSTS.
3. POLYETHYLENE FILM SHALL BE SECURED OVER BANKS OR STOCKPILED SOIL MATERIAL FOR TEMPORARY PROTECTION. THIS MATERIAL CAN BE SALVAGED AND RE-USED.

APPLYING MULCH
WHEN MULCH IS USED WITHOUT SEEDING, MULCH SHALL BE APPLIED TO PROVIDE FULL COVERAGE OF THE EXPOSED AREA.
1. DRY STRAW OR MAY MULCH AND WOOD CHIPS SHALL BE APPLIED UNIFORMLY BY HAND OR BY MECHANICAL EQUIPMENT.
2. IF THE AREA WILL EVENTIALLY BE COVERED WITH PERENNIAL VEGETATION, 20-30 POUNDS OF NITROGEN PER ACER IN ADDITION TO THE NORMAL AMOUNT SHALL BE APPLIED TO OFFSET THE UPTAKE OF NITROGEN CAUSED BY THE DECOMPOSITION OF THE ORGANIC MULCHES.
3. APPLY POLYETHYLENE FILM ON EXPOSED AREAS.

ANCHORING MULCH
1. STRAW OR HAY MULCH CAN BE PRESSED INTO THE SOIL WITH A DISK HARROW WITH THE DISK SET STRAIGHT OR WITH A SPECIAL "PACKER DISK". DISKS MAY BE SMOOTH OR SERRATED AND SHOULD BE 20 INCHES OR MORE IN DIAMETER AND 8 TO 12 INCHES APART. THE EDGES OF THE DISK SHALL BE DULL ENOUGH NOT TO CUT THE MULCH BUT TO PRESS IT INTO THE SOIL LEAVING MUCH OF IT IN AN ERECT POSITION. STRAW OR HAY MULCH SHALL BE ANCHORED IMMEDIATELY AFTER APPLICATION.
1.1. STRAW OF HAY MULCH SPREAD WITH SPECIAL BLOWER-TYPE OF EQUIPMENT MAY BE ANCHORED. TACKIFIERS, BINERS AND HYDRAULIC MULCH WITH TACKIFIER SPECIFICALLY DESIGNED FOR TACKING STRAW CAN BE SUBSTITUTED FOR EMULSIFIED ASPHALT. PLEASE REFER TO SPECIFICATION TAC-RACKIFIERS. PLASTIC MESH OR NETTING WITH MESH NO LARGER THAN ONE INCH BY ONE INCH SHALL BE INSTALLED ACCORDING TO THE MANUFACTURER'S SPECIFICATIONS.
2. NETTING OF THE APPROPRIATE SIZE SHALL BE USED TO ANCHOR WOOD WASTE. OPENINGS OF THE NETTING SHALL NOT BE LARGER THAN THE AVERAGE SIZE OF THE WOOD WASTE CHIPS.
3. POLYETHYLENE FILM SHALL BE ANCHOR TRENCHED AT THE TOP AS WELL AS INCREMENTALLY AS NECESSARY.

MULCHING APPLICATION REQUIREMENTS

MATERIAL	RATE	DEPTH
DRY STRAW OR HAY	2 1/2 TON/ACRE	2" TO 4"
WOOD WASTE, CHIPS, SAWDUST, BARK	6 TO 9 TON/ACRE	2" TO 3"
POLYETHYLENE FILM	SECURE WITH SOIL, ANCHORS, WEIGHTS	---
GEOTEXTILES, JUTE MATTING, NETTING, ETC.	SEE MANUFACTURER'S RECOMMENDATIONS	---

Ds1 DISTURBED AREA STABILIZATION (WITH MULCHING ONLY)

SPECIES	BROADCAST RATES 2/ – PLS 3/ PER ACRE	PER 1000 SQ. FT.	RESOURCE AREA	PLANTING DATES BY RESOURCE AREA PLANTING DATES (SOLID LINES INDICATE OPTIMUM DATES, DOTTED LINES INDICTE PERMISSABLE BUT MARGINAL DATES.) J F M A M J J A S O N D	REMARKS
LOVEGRASS WEEPING (Eragrostis curvula) ALONE / IN MIXTURES	4 lbs / 2 lbs	0.1 lb / 0.05 lb	M–L P C		1,500,000 SEED PER POUND MAY LAST FOR SEVERAL TEARS. MIX WITH SEERICIA LESPEDEZA
RYE (Secale cerrale) ALONE / IN MIXTURES	3 bu (166 lbs) / 1/2 BU (28 lbs)	3.9 lb / 0.6 lb	M–L P C		18,000 SEED PER POUND QUICK COVER. DROUGHT TOLERANT AND WINTER HARDY.
LOVEGRASS WEEPING (Eragrostis curvula) ALONE	40 lbs	0.9 lb	M–L P C		227,000 SEED PER POUND DENCE COVER. VERY COMPETITIVE AND IS NOT TO BE USED IN MIXTURES.

Ds2 DISTURBED AREA STABILIZATION (WITH TEMPORARY SEEDING)

SPECIES	BROADCAST RATES 2/ – PLS 3/ PER ACRE	PER 1000 SQ. FT.	RESOURCE AREA	PLANTING DATES BY RESOURCE AREA PLANTING DATES (SOLID LINES INDICATE OPTIMUM DATES, DOTTED LINES INDICTE PERMISSABLE BUT MARGINAL DATES.) J F M A M J J A S O N D	REMARKS
BERMUDA, COMMON (Cynodon dactylon) HULLED SEED WITH TEMPORARY COVER / WITH OTHER PERENNIALS	4 lbs / 2 lbs	0.1 lb / 0.05 lb	P C		PLANT WITH WINTER ANUALS / PLANT WITH TALL FESCUE
BERMUDA SPRIGS (Cynodon dactylon) COASTAL COMMON MIDLAND, OR TIFT 44 / COASTAL COMMON OR TIFT 44 / TIFT 78	40 CU.FT. OR SOD PLUGS 3' x 3'	0.9 CU.FT.	M–L / P C / C		A CUBIC FOOT CONTAINS APPROX. 650 SPRIGS.A BUSHEL CONTAINS 1.25 CU.FT. OR APPROX. 800 SPRIGS / SAME AS ABOVE / SOUTHERN COASTAL PLAIN ONLY
FESCUE, TALL (Festuca arundinaccea) ALONE / WITH OTHER PERENNIALS	50 lbs / 30 lbs	1.1 lb / 0.7 lb	M–L P		227,000 SEED PER POUND USE ALONE ONLY ON BETTER SITES NOT FOR DROUGHTY SOILS. MIX W/ PERENNIAL LESPEDEZAS OR CROWNVETCH.APPLY TOPDRESSING IN SPRING FOLLOWING FALL PLANTINGS NOT FOR HEAVY USE AREAS OR ATHLETIC FIELDS.

Ds3 DISTURBED AREA STABILIZATION (WITH PERMANENT VEGETATION)

TYPICAL INSTALLATION GUIDELINES FOR ROLLED EROSION CONTROL PRODUCTS (RECP)

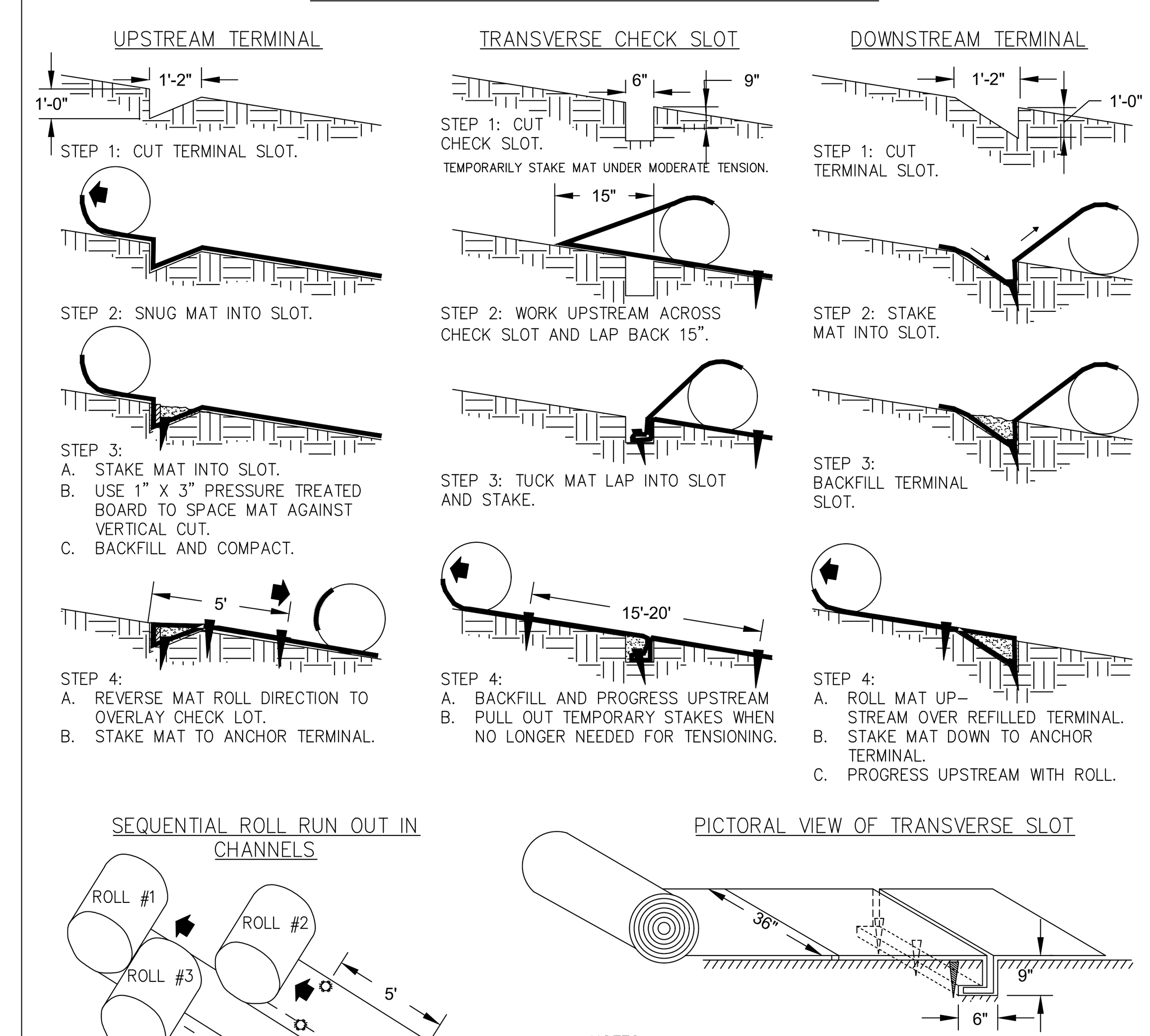

NOTES:
1. START AT DOWNSTREAM TERMINAL AND PROGRESS UPSTREAM.
2. FIRST ROLL IS CENTERED LONGITUDINALLY IN MID–CHANNEL AND PINNED WITH TEMPORARY STAKES TO MAINTAIN ALIGNMENT.
3. SUBSEQUENT ROLLS FOLLOW IN STAGGERED SEQUENCE BEHIND THE FIRST ROLL. USE THE CENTER ROLL FOR ALIGNMENT TO THE CHANNEL CENTER.
4. WORK OUTWARDS FROM THE CHANNEL CENTER TO THE EDGE.
5. USE 3" OVERLAPS AND STAKE AT 5' INTERVALS ALONG THE SEAMS.
6. USE 3' OVERLAPS AND SHINGLE DOWNSTREAM TO CONNECT THE LINING AT THE ROLL ENDS.

SS SLOPE STABILIZATION

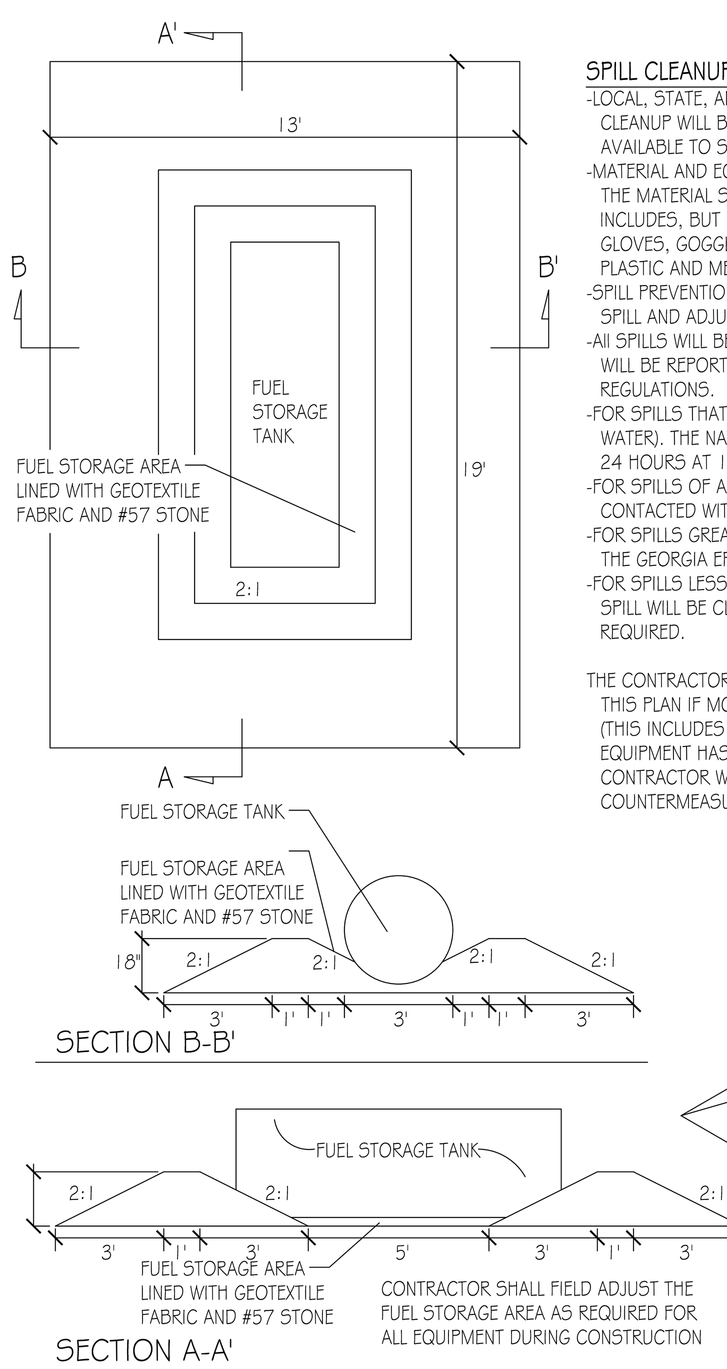

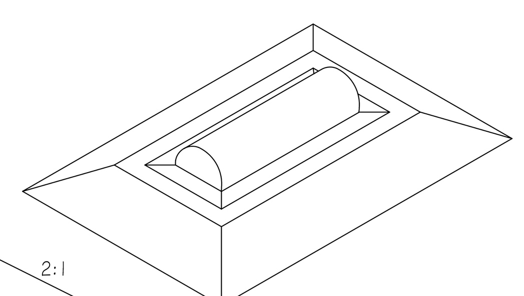

SPILL CLEANUP AND CONTROL PRACTICES
-LOCAL, STATE, AND MANUFACTURER'S RECOMMENDED METHODS FOR SPILL CLEANUP WILL BE CLEARLY POSTED AND PROCEDURES WILL BE MADE AVAILABLE TO SITE PERSONNEL.
-MATERIAL AND EQUIPMENT NECESSARY FOR SPILL CLEANUP WILL BE KEPT IN THE MATERIAL STORAGE AREAS. TYPICAL MATERIALS AND EQUIPMENT INCLUDES, BUT IS NOT LIMITED TO, BROOMS, DUSTPANS, MOPS, RAGS, GLOVES, GOGGLES, CAT LITER, SAND, SAWDUST AND PROPERLY LABELED PLASTIC AND METAL WASTE CONTAINERS.
-SPILL PREVENTION PRACTICES AND PROCEDURES WILL BE REVIEWED AFTER A SPILL AND ADJUSTED AS NECESSARY TO PREVENT FUTURE SPILLS.
-All SPILLS WILL BE CLEANED UP IMMEDIATELY UPON DISCOVERY. ALL SPILLS WILL BE REPORTED AS REQUIRED BY LOCAL, STATE AND FEDERAL REGULATIONS.
-FOR SPILLS THAT IMPACT SURFACE WATER (LEAVE A SHEEN ON SURFACE WATER). THE NATIONAL RESPONSE CENTER (NRC) WILL BE CONTACTED WITHIN 24 HOURS AT 1-800-426-2675.
-FOR SPILLS OF AN UNKNOWN AMOUNT, THE NATIONAL CENTER (NRC) WILL BE CONTACTED WITHIN 24 HOURS AT 1-800-426-2675.
-FOR SPILLS GREATER THAN 25 GALLONS AND NO SURFACE WATER IMPACTS, THE GEORGIA EPD WILL BE CONTACTED WITHIN 24 HOURS.
-FOR SPILLS LESS THAN 25 GALLONS AND NO SURFACE WATER IMPACTS, THE SPILL WILL BE CLEANED UP AND LOCAL AGENCIES WILL BE CONTACTED AS REQUIRED.

THE CONTRACTOR SHALL NOTIFY THE LICENSED PROFESSIONAL WHO PREPARED THIS PLAN IF MORE THAN 1320 GALLONS OF PETROLEUM IS STORED ONSITE (THIS INCLUDES CAPACITIES OF EQUIPMENT) OR IF ANY ONE PIECE OF EQUIPMENT HAS A CAPACITY GREATER THAN 660 GALLONS. THE CONTRACTOR WILL NEED A SPILL PREVENTION CONTAINMENT AND COUNTERMEASURES PLAN PREPARED BY THAT LICENSED PROFESSIONAL.

FUEL STORAGE AREA

N.T.S.

SPILL CLEANUP AND CONTROL PRACTICES
-LOCAL, STATE, AND MANUFACTURER'S RECOMMENDED METHODS FOR SPILL CLEANUP WILL BE CLEARLY POSTED AND PROCEDURES WILL BE MADE AVAILABLE TO SITE PERSONNEL.
-MATERIAL AND EQUIPMENT NECESSARY FOR SPILL CLEANUP WILL BE KEPT IN THE MATERIAL STORAGE AREAS. TYPICAL MATERIALS AND EQUIPMENT INCLUDES, BUT IS NOT LIMITED TO, BROOMS, DUSTPANS, MOPS, RAGS, GLOVES, GOGGLES, CAT LITER, SAND, SAWDUST AND PROPERLY LABELED PLASTIC AND METAL WASTE CONTAINERS.
-SPILL PREVENTION PRACTICES AND PROCEDURES WILL BE REVIEWED AFTER A SPILL AND ADJUSTED AS NECESSARY TO PREVENT FUTURE SPILLS.
-All SPILLS WILL BE CLEANED UP IMMEDIATELY UPON DISCOVERY. ALL SPILLS WILL BE REPORTED AS REQUIRED BY LOCAL, STATE AND FEDERAL REGULATIONS.
-FOR SPILLS THAT IMPACT SURFACE WATER (LEAVE A SHEEN ON SURFACE WATER). THE NATIONAL RESPONSE CENTER (NRC) WILL BE CONTACTED WITHIN 24 HOURS AT 1-800-426-2675.
-FOR SPILLS OF AN UNKNOWN AMOUNT, THE NATIONAL CENTER (NRC) WILL BE CONTACTED WITHIN 24 HOURS AT 1-800-426-2675.
-FOR SPILLS GREATER THAN 25 GALLONS AND NO SURFACE WATER IMPACTS, THE GEORGIA EPD WILL BE CONTACTED WITHIN 24 HOURS.
-FOR SPILLS LESS THAN 25 GALLONS AND NO SURFACE WATER IMPACTS, THE SPILL WILL BE CLEANED UP AND LOCAL AGENCIES WILL BE CONTACTED AS REQUIRED.

THE CONTRACTOR SHALL NOTIFY THE LICENSED PROFESSIONAL WHO PREPARED THIS PLAN IF MORE THAN 1320 GALLONS OF PETROLEUM IS STORED ONSITE (THIS INCLUDES CAPACITIES OF EQUIPMENT) OR IF ANY ONE PIECE OF EQUIPMENT HAS A CAPACITY GREATER THAN 660 GALLONS. THE CONTRACTOR WILL NEED A SPILL PREVENTION CONTAINMENT AND COUNTERMEASURES PLAN PREPARED BY THAT LICENSED PROFESSIONAL.

EMERGENCY PROCEDURES FOR SPILL OF REPORTABLE QUANTITY OF PETROLEUM PRODUCTS:
-ALL PETROLEUM PRODUCTS SHALL BE STORED AND USED IN AN AREA THAT PROVIDES A SECONDARY CONTAINMENT FEATURE, SECONDARY CONTAINMENT STRUCTURE SHALL CONSIST OF FLOOR, WALLS, AND JOINTS AND BE CONSTRUCTED ON A MATERIAL CAPABLE OF ADEQUATELY CONTAINING THOSE FUELS STORED WITHIN. CAPACITY OF THE SECONDARY CONTAINMENT SHALL BE SHALL HAVE A STORAGE VOLUME THAT IS A MINIMUM OF 110% OF THE TOTAL VOLUME CAPACITY OF THE LARGEST PRIMARY CONTAINER STORED WITHIN. RAIN WATER SHALL NOT BE ALLOWED TO COLLECT WITHIN THE SECONDARY CONTAINER AND ADEQUATE COVER SHALL BE PROVIDED TO PREVENT THE INGRESS OF RAIN WATER.

-EMERGENCY PROCEDURES FOR SPILLS SHALL BE KEPT IN THE CONSTRUCTION TRAILER INCLUDING EMERGENCY CONTACT NUMBERS. ANY LEAKS OR SPILLS SHALL BE THE RESPONSIBILITY OF THE CONTRACTOR TO CONTAIN, CONTROL, AND REMEDIATE WITH ALL LOCAL, STATE, AND FEDERAL GUIDELINES, ORDINANCES, AND LAWS.

- THE CONTRACTOR SHALL LOCATE STORAGE FACILITIES IN AREAS WITH THE LEAST FORESEEABLE IMPACT IF A CATASTROPHIC EVENT SHOULD OCCUR.

PAINT/CHEMICAL STORAGE, CLEANUP AND DISPOSAL:
- PAINT AND/OR OTHER CHEMICALS SHALL BE STORED IN SECURED FACILITIES WITH RESTRICTED ACCESS TO EMPLOYEES ONLY. CLEANUP AND DISPOSAL OF THIS MATERIAL SHALL BE ACCORDANCE WITH ALL RECOGNIZED LOCAL AND FEDERAL REQUIREMENTS. ALL DISPOSAL SHALL BE APPROVED OFF-SITE WASTE FACILITIES THAT ACCEPT THIS MATERIAL.

Ds4 DISTURBED AREA STABILIZATION (WITH SOD)

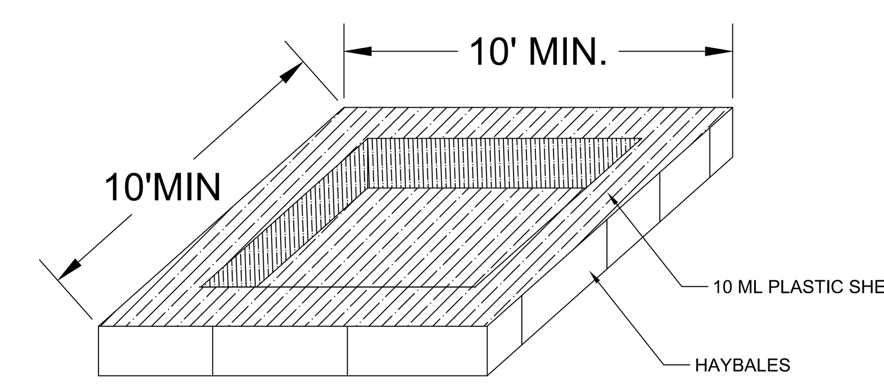

OPERATION
INSPECTION: CHECK ALL CONCRETE WASHDOWN FACILITIES DAILY TO DETERMINE IF THEY HAVE BEEN FILLED TO 75% CAPACITY. THE FACILITY NEEDS TO BE CLEANED OR CHANGED WHEN 75% FULL. INSPECT WASHOUTS DAILY TO ENSURE THAT PLASTIC LININGS ARE INTACT AND SIDEWALLS HAVE NOT BEEN DAMAGED BY CONSTRUCTION ACTIVITIES.
MATERIAL REMOVAL: IF THE WASHDOWN IS NEARING CAPACITY, VACUUM AND DISPOSE OF THE WASTE MATERIAL IN AN APPROVED MANNER. DO NOT DISCHARGE LIQUIDS TO WATERWAYS, STORM DRAINS OR DIRECTLY ONTO GROUND. DO NOT USE SANITARY SEWER WITHOUT LOCAL APPROVAL. REMOVE LIQUIDS OR COVER THE STRUCTURES BEFORE PREDICTED STORMS TO PREVENT OVERFLOWS. YOU CAN REMOVE HARDENED CONCRETE WHOLE OR YOU CAN BREAK IT UP FIRST, DEPENDING ON THE TYPE OF EQUIPMENT AVAILABLE AT YOUR SITE. HAUL IT AWAY FOR DISPOSAL OR RECYCLING. WHEN YOU REMOVE MATERIALS FROM THE CONCRETE WASHDOWN, INSPECT FOR SIGNS OF WEAKENING OR DAMAGE, AND REBUILD STRUCTURE OR MAKE NECESSARY REPAIRS. INSTALL A NEW PLASTIC LINER AFTER EVERY CLEANING.

CONCRETE WASHDOWN AREA DETAIL

N.T.S.

CONTRACTOR TO PROVIDE BMP'S FOR CONCRETE WASHDOWN OF TOOLS, CONCRETE MIXER CHUTES, HOPPERS AND THE REAR OF THE VEHICLES. WASHOUT OF THE DRUM AT THE CONSTRUCTION SITE IS PROHIBITED.

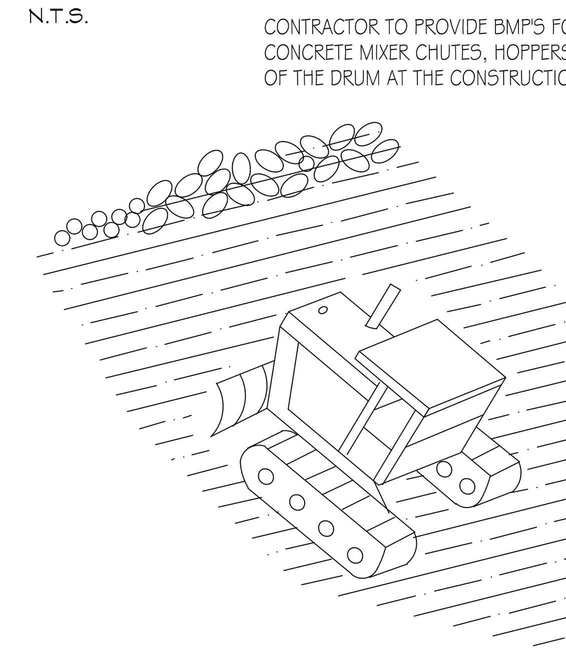

A ROUGH SOIL SURFACE WITH HORIZONTAL DEPRESSIONS ON A CONTOUR OR SLOPES LEFT IN A ROUGHENED CONDITION AFTER GRADING.

Su SURFACE ROUGHENING

GEORGIA811 www.Georgia811.com

24 HOUR CONTACT
CITY OF DACULA
BRITTNI NIX
BRITTNI.NIX@DACULAGA.GOV
770-963-7451

Bowman
Certificate of Authorization License No. LSF001241
Bowman Consulting Group Ltd
4174 Silver Peak Parkway
Suwanee, GA 30024
Phone: (770) 932-6550
www.bowman.com

© 2021 Bowman Consulting Group Ltd

EROSION CONTROL PLAN DETAILS
2025 CDBG FOR CITY OF DACULA
SANJO STREET WIDENING, PAVING, DRAINAGE, AND SIDEWALK IMPROVEMENTS PROJECT
CITY OF DACULA, GA
GWINNETT COUNTY

CONSULTANT PROJECT #
200577-01-001

GEORGIA REGISTERED PROFESSIONAL ENGINEER PE042537 VUONG Q. DANG 11/21/25

LEVEL II E&S CERT.#90012
EXP. DATE 12/19/2028

PLAN STATUS	
11/21/2025	BID SET
DATE	DESCRIPTION

KDW	RWH	SAD
DESIGN	DRAWN	CHKD

SCALE .
JOB No. 24-204(200577-01-001)
DATE : 11/14/2025
FILE No.
SHEET No. C540

November 21, 2025
File Path V:\200523 - City of Dacula\200523-01-001 (ENG) - Administrative Building\Engineering\Engineering Plans\SANJO SHEETS\200577-01-D SANJO C500 EROS.dwg
THIS DOCUMENT, TOGETHER WITH THE CONCEPTS AND DESIGNS PRESENTED HEREIN, AS AN INSTRUMENT OF SERVICE, IS INTENDED ONLY FOR THE SPECIFIC PURPOSE AND CLIENT FOR WHICH IT WAS PREPARED. REUSE OF AND IMPROPER RELIANCE ON THIS DOCUMENT WITHOUT WRITTEN AUTHORIZATION AND ADAPTATION BY BOWMAN CONSULTING SHALL BE WITHOUT LIABILITY TO BOWMAN CONSULTING.

CURB INLET FILTER "PIGS IN BLANKET"

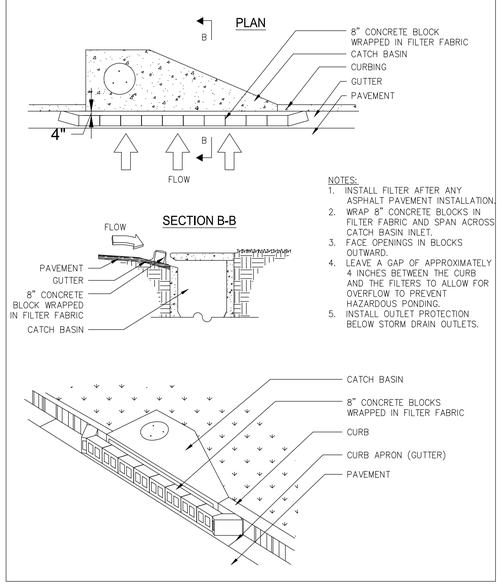

NOTES:
1. INSTALL FILTER AFTER ANY ASPHALT PAVEMENT INSTALLATION.
2. WRAP 8" CONCRETE BLOCKS IN FILTER FABRIC AND SPAN ACROSS CATCH BASIN INLET.
3. FACE OPENINGS IN BLOCKS OUTWARD.
4. LEAVE A GAP OF APPROXIMATELY 4 INCHES BETWEEN THE CURB AND THE FILTERS TO ALLOW FOR OVERFLOW TO PREVENT HAZARDOUS PONDING.
5. INSTALL OUTLET PROTECTION BELOW STORM DRAIN OUTLETS.

Sd2-P INLET SEDIMENT TRAP CURB INLET PROTECTION

SILT FENCE - TYPE SENSITIVE

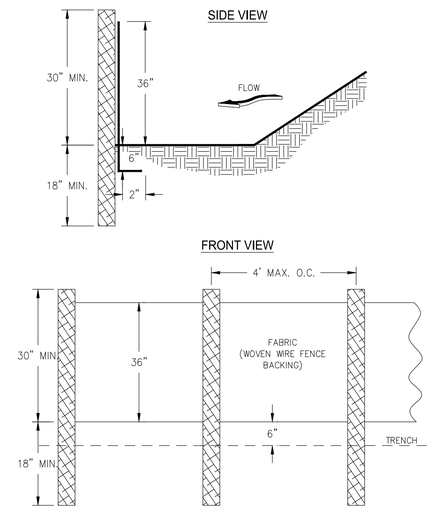

NOTES:
1. USE STEEL ~~OR WOOD POSTS~~ OR AS SPECIFIED BY THE EROSION, SEDIMENTATION, AND POLLUTION CONTROL PLAN.
2. HEIGHT (36") IS TO BE SHOWN ON THE EROSION, SEDIMENTATION, AND POLLUTION CONTROL PLAN.

Sd1-S SILT FENCE TYPE SENSITIVE

CRUSHED STONE CONSTRUCTION EXIT

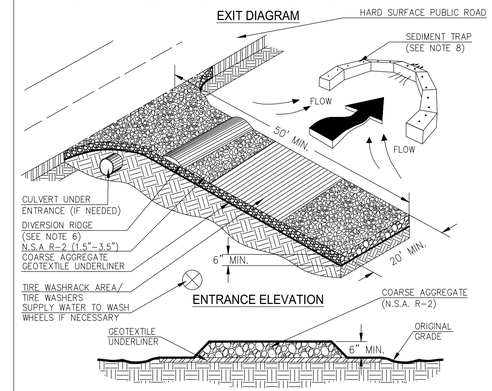

NOTES:
1. AVOID LOCATING ON STEEP SLOPES OR AT CURVES ON PUBLIC ROADS.
2. REMOVE ALL VEGETATION AND OTHER UNSUITABLE MATERIAL FROM THE FOUNDATION AREA, GRADE, AND CROWN FOR POSITIVE DRAINAGE.
3. AGGREGATE SIZE SHALL BE IN ACCORDANCE WITH NATIONAL STONE ASSOCIATION R-2 (1.5"-3.5" STONE).
4. GRAVEL PAD SHALL HAVE A MINIMUM THICKNESS OF 6".
5. PAD WIDTH SHALL BE EQUAL FULL WIDTH AT ALL POINTS OF VEHICULAR EGRESS, BUT NO LESS THAN 20'.
6. A DIVERSION RIDGE SHOULD BE CONSTRUCTED WHEN GRADE TOWARD PAVED AREA IS GREATER THAN 2%.
7. INSTALL PIPE UNDER THE ENTRANCE IF NEEDED TO MAINTAIN DRAINAGE DITCHES.
8. WHEN WASHING IS REQUIRED, IT SHOULD BE DONE ON AN AREA STABILIZED WITH CRUSHED STONE THAT DRAINS INTO AN APPROVED SEDIMENT TRAP OR SEDIMENT BASIN (DIVERT ALL SURFACE RUNOFF AND DRAINAGE FROM THE ENTRANCE TO A SEDIMENT CONTROL DEVICE).
9. WASHRACKS AND/OR TIRE WASHERS MAY BE REQUIRED DEPENDING ON SCALE AND CIRCUMSTANCE. IF NECESSARY, WASHRACK DESIGN MAY CONSIST OF ANY MATERIAL SUITABLE FOR TRUCK TRAFFIC THAT REMOVE MUD AND DIRT.
10. MAINTAIN AREA IN A WAY THAT PREVENTS TRACKING AND/OR FLOW OF MUD ONTO PUBLIC RIGHTS-OF-WAYS. THIS MAY REQUIRE TOP DRESSING, REPAIR AND/OR CLEANOUT OF ANY MEASURES USED TO TRAP SEDIMENT.

Co CONSTRUCTION EXIT

Table 6-5.1. Fertilizer Requirements

TYPE OF SPECIES	YEAR	ANALYSIS OR EQUIVALENT N-P-K	RATE	N TOP DRESSING RATE
1. Cool season grasses	First Second Maintenance	6-12-12 6-12-12 10-10-10	1500 lbs./ac. 1000 lbs./ac. 400 lbs./ac.	50-100 lbs./ac. 1/2/ __ 30
2. Cool season grasses and legumes	First Second Maintenance	6-12-12 0-10-10 0-10-10	1500 lbs./ac. 1000 lbs./ac. 400 lbs./ac.	0-50 lbs./ac. 1/ __ __
3. Ground covers	First Second Maintenance	10-10-10 10-10-10 10-10-10	1300 lbs./ac. 3/ 1300 lbs./ac. 3/ 1100 lbs./ac.	__ __ __
4. Pine seedlings	First	20-10-5	one 21-gram pellet per seedling placed in the closing hole	__
5. Shrub Lespedeza	First Maintenance	0-10-10 0-10-10	700 lbs./ac. 700 lbs./ac. 4/	__
6. Temporary cover crops seeded alone	First	10-10-10	500 lbs./ac.	30 lbs./ac. 5/
7. Warm season grasses	First Second Maintenance	6-12-12 6-12-12 10-10-10	1500 lbs./ac. 800 lbs./ac. 400 lbs./ac.	50-100 lbs./ac. 2/6/ 50-100 lbs./ac. 2/ 30 lbs./ac.
8. Warm season grasses and legumes	First Second Maintenance	6-12-12 0-10-10 0-10-10	1500 lbs./ac. 1000 lbs./ac. 400 lbs./ac.	50 lbs./ac./6/

1/ Apply in spring following seeding.
2/ Apply in split applications when high rates are used.
3/ Apply in 3 split applications.
4/ Apply when plants are pruned.
5/ Apply to grass species only.
6/ Apply when plants grow to a height of 2 to 4 inches.

FABRIC AND SUPPORTING FRAME FOR INLET PROTECTION

STEEL FRAME AND SILT FENCE INSTALLATION

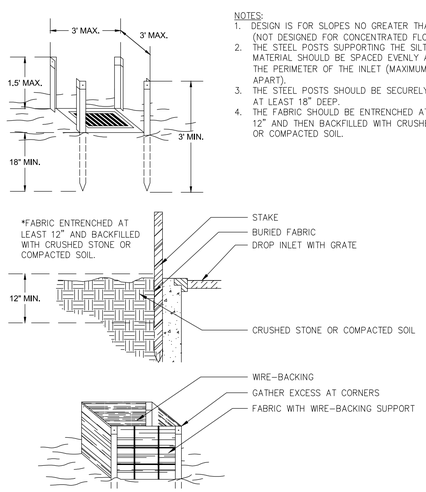

NOTES:
1. DESIGN IS FOR SLOPES NO GREATER THAN 5% (NOT DESIGNED FOR CONCENTRATED FLOWS).
2. THE STEEL POSTS SUPPORTING THE SILT FENCE MATERIAL SHOULD BE SPACED EVENLY AROUND THE PERIMETER OF THE INLET (MAXIMUM OF 3' APART).
3. THE STEEL POSTS SHOULD BE SECURELY DRIVEN AT LEAST 18" DEEP.
4. THE FABRIC SHOULD BE ENTRENCHED AT LEAST 12" AND THEN BACKFILLED WITH CRUSHED STONE OR COMPACTED SOIL.

Sd2-F INLET SEDIMENT TRAP FILTER FABRIC WITH SUPPORTING FRAME

SILT FENCE - TYPE NON-SENSITIVE

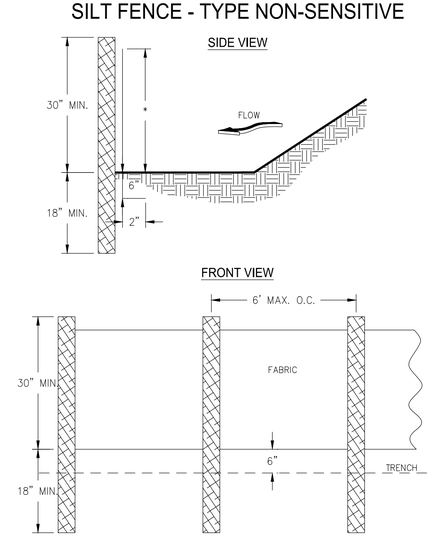

NOTES:
1. USE STEEL OR WOOD POSTS OR AS SPECIFIED BY THE EROSION, SEDIMENTATION, AND POLLUTION CONTROL PLAN.
2. HEIGHT (*) IS TO BE SHOWN ON THE EROSION, SEDIMENTATION, AND POLLUTION CONTROL PLAN.

Sd1-NS SILT FENCE TYPE NON-SENSITIVE

RIPRAP OUTLET PROTECTION

PIPE OUTLET TO FLAT AREA -- NO WELL DEFINED CHANNEL

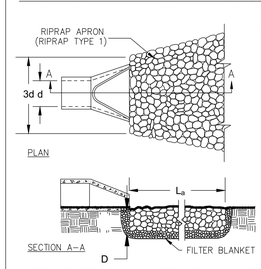

NOTES:
1. L_a IS THE LENGTH OF THE RIPRAP APRON.
2. D = 1.5 TIMES THE MAXIMUM STONE DIAMETER BUT NOT LESS THAN 6".
3. IN A WELL-DEFINED CHANNEL, EXTEND THE APRON UP THE CHANNEL BANKS TO AN ELEVATION OF 6" ABOVE THE MAXIMUM TAILWATER DEPTH OR TO THE TOP OF THE BANK (WHICHEVER IS LESS).
4. A FILTER BLANKET OR FILTER FABRIC SHOULD BE INSTALLED BETWEEN THE RIPRAP AND THE SOIL FOUNDATION.

PIPE OUTLET TO WELL DEFINED CHANNEL

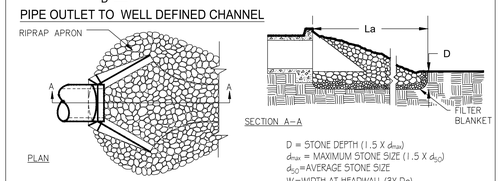

D = STONE DEPTH (1.5 X d_{max})
d_{max} = MAXIMUM STONE SIZE (1.5 X d_{50})
d_{50}=AVERAGE STONE SIZE
W=WIDTH AT HEADWALL (3X Do)
W_2=DOWNSTREAM WIDTH (Do + 0.4La)

St STORM DRAIN OUTLET PROTECTION

EXCAVATED INLET SEDIMENT TRAP : "TYPICAL"

1. DRAINAGE AREA = 0.50 AC
2. REQUIRED SEDIMENT STORAGE = 67 CY/AC * DRAINAGE AREA
   REQUIRED SEDIMENT STORAGE = 67 CY/AC * 0.50 AC
   REQUIRED SEDIMENT STORAGE = 3.62 CY = 907.69 CF
3. ASSUME EXCAVATION DEPTH (MINIMUM OF 1.5 FT) = 3 FT
4. ASSUME SLOPE OF SIDES (SHALL NOT BE STEEPER THAN 2:1) = 2:1
5. DETERMINE REQUIRED SURFACE AREA
   SAmin = REQUIRED SEDIMENT STORAGE / EXCAVATION DEPTH
   SAmin = 907.69 CF / 3 FT
   SAmin = 302.56 SF
6. ASSUME SHAPE OF EXCAVATION AND DETERMINE DIMENSIONS
   (A RECTANGULAR SHAPE WITH 2:1 LENGTH TO WIDTH RATIO IS RECOMMENDED.)
   SHAPE: RECTANGULAR
   DIMENSIONS: L=13 FT W=26 FT DIAMETER (if applicable) = N/A FT
7. AVAILABLE SEDIMENT STORAGE: 13 X 26 X 3 = 1,014 CF / 27 = 37.56 CY

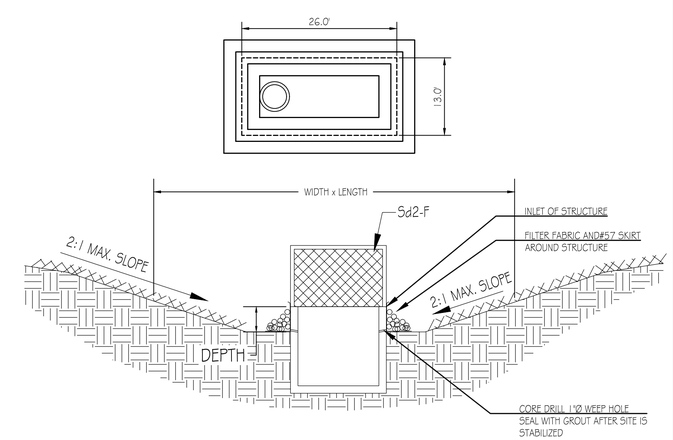

Sd2-F INLET SEDIMENT TRAP FILTER FABRIC EXCAVATED

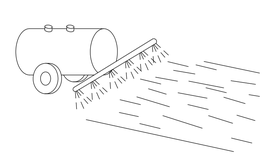

Du DUST CONTROL
DRAIN OUTLET PROTECTION
N.T.S.

GEORGIA811 www.Georgia811.com

24 HOUR CONTACT
CITY OF DACULA
BRITTNI NIX
BRITTNI.NIX@DACULAGA.GOV
770-963-7451

Bowman
Certificate of Authorization License No. LSF001241

Bowman Consulting Group Ltd
4174 Silver Peak Parkway
Suwanee, GA 30024
Phone: (770) 932-6550
www.bowman.com

© 2021 Bowman Consulting Group Ltd

EROSION CONTROL PLAN DETAILS
2025 CDBG FOR CITY OF DACULA
SANJO STREET WIDENING, PAVING, DRAINAGE,
AND SIDEWALK IMPROVEMENTS PROJECT
GWINNETT COUNTY
CITY OF DACULA, GA

CONSULTANT PROJECT #
200577-01-001

GEORGIA REGISTERED PROFESSIONAL ENGINEER VUONG Q. DANG
11/21/25
LEVEL II E&S CERT.#00012
EXP. DATE 12/19/2028

PLAN STATUS	
11/21/2025	BID SET

DATE	DESCRIPTION	
KDW DESIGN	RWH DRAWN	SAD CHKD

SCALE .
JOB No. 24-204(200577-01-001)
DATE : 11/14/2025
FILE No.
SHEET No. C541

November 21, 2025
File Path:V:\200523 - City of Dacula\200523-01-001 (ENG) - Administrative Building\Engineering\Engineering Plans\SAN JO SHEETS\200577-01-D SAN JO C500 EROS.dwg
THIS DOCUMENT, TOGETHER WITH THE CONCEPTS AND DESIGNS PRESENTED HEREIN, IS AN INSTRUMENT OF SERVICE, IS INTENDED ONLY FOR THE SPECIFIC PURPOSE AND CLIENT FOR WHICH IT WAS PREPARED. REUSE OF AND IMPROPER RELIANCE ON THIS DOCUMENT WITHOUT WRITTEN AUTHORIZATION AND ADAPTATION BY BOWMAN CONSULTING SHALL BE WITHOUT LIABILITY TO BOWMAN CONSULTING.

TYPICAL STRAW BALE CHECK DAM

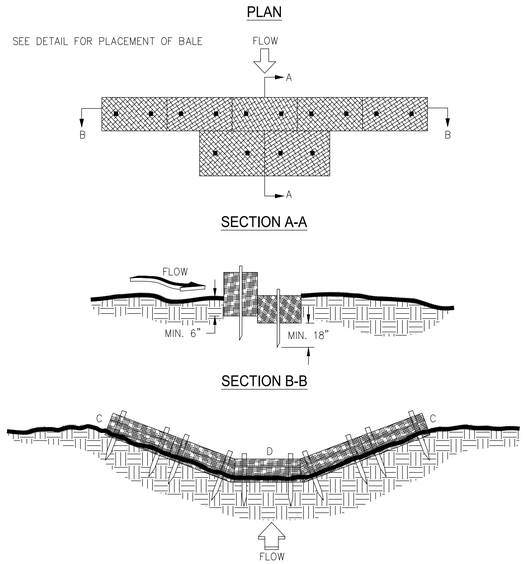

NOTES:
1. BALES SHOULD BE BOUND WITH WIRE OR NYLON STRING AND SHOULD BE PLACED IN ROWS WITH BALE ENDS TIGHTLY ABUTTING THE ADJACENT BALES.
2. REMOVE #4 REBAR AFTER STRAW BALES ARE NO LONGER IN PLACE.
3. POINT C OF SECTION B–B SHOULD ALWAYS BE HIGHER THAN POINT D.

Cd-Hb CHECK DAM - STRAW BALES

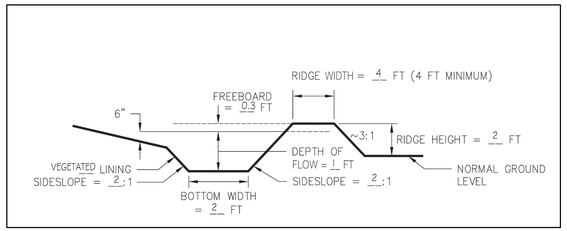

D1 DIVERSION

GEORGIA811
www.Georgia811.com

24 HOUR CONTACT
CITY OF DACULA
BRITTNI NIX
BRITTNI.NIX@DACULAGA.GOV
770-963-7451

Bowman
Certificate of Authorization License No. LSF001241

Bowman Consulting Group Ltd
4174 Silver Peak Parkway
Suwanee, GA 30024
Phone: (770) 932-6550
www.bowman.com

© 2021 Bowman Consulting Group Ltd

EROSION CONTROL PLAN DETAILS
2025 CDBG FOR CITY OF DACULA
SANJO STREET WIDENING, PAVING, DRAINAGE,
AND SIDEWALK IMPROVEMENTS PROJECT
GWINNETT COUNTY
CITY OF DACULA, GA

CONSULTANT PROJECT #
200577-01-001

LEVEL II E&S CERT.#90012
EXP. DATE 12/19/2028

PLAN STATUS	
11/21/2025	BID SET
DATE	DESCRIPTION

KDW	RWH	SAD
DESIGN	DRAWN	CHKD

SCALE .
JOB No. 24-204(200577-01-001)
DATE : 11/14/2025
FILE No.
SHEET No. C542

November 21, 2025
File Path:V:\200523_City of Dacula\200523-01-001 (ENG) - Administrative Building\Engineering\Engineering Plans\SANJO SHEETS\200577-01-D SANJO C500 EROS.dwg
THIS DOCUMENT, TOGETHER WITH THE CONCEPTS AND DESIGNS PRESENTED HEREIN, AS AN INSTRUMENT OF SERVICE, IS INTENDED ONLY FOR THE SPECIFIC PURPOSE AND CLIENT FOR WHICH IT WAS PREPARED. REUSE OF AND IMPROPER RELIANCE ON THIS DOCUMENT WITHOUT WRITTEN AUTHORIZATION AND ADAPTATION BY BOWMAN CONSULTING SHALL BE WITHOUT LIABILITY TO BOWMAN CONSULTING.

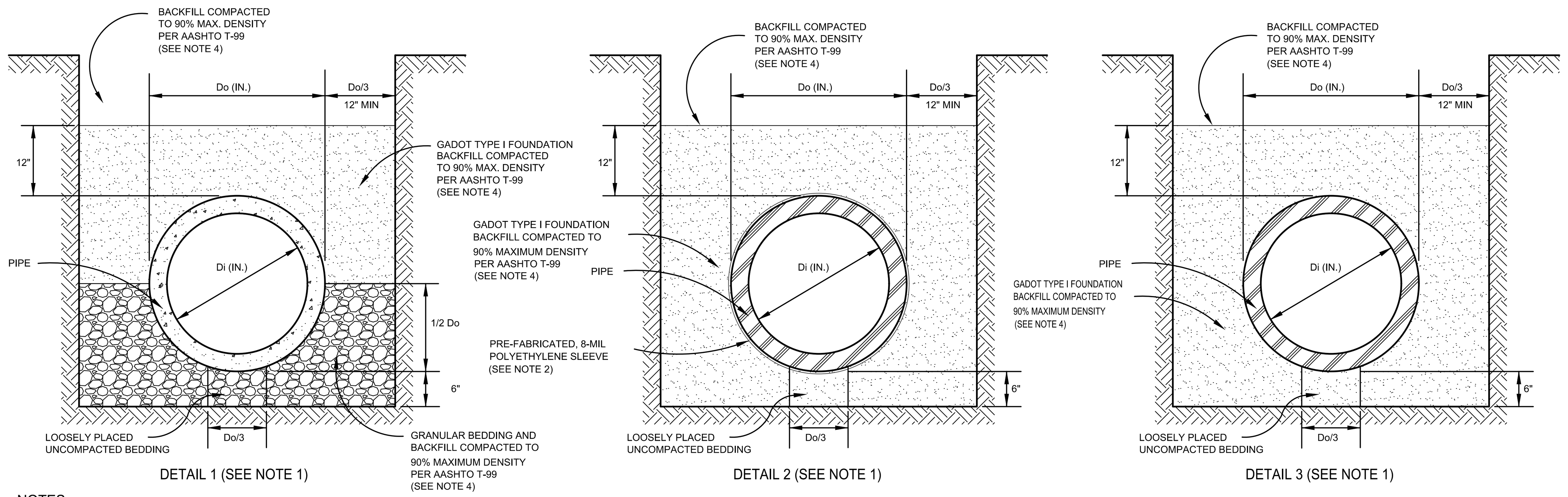

PIPE TYPE	BEDDING DETAIL DETAIL 1 ALL pH RANGES	DETAIL 2 ALL pH RANGES	DETAIL 3 ALL pH RANGES	DETAIL 3 pH≥5
AL TYPE 2 CSP	X	X		X
POLYMER PRECOAT CSP	X	X	X	
ALUMINUM	X	X	X	
RCP	X	X		X
HDPE	X			

NOTES

1.) REPRESENTATIVE SOIL pH RESULTS SHALL BE PROVIDED FOR ALUMINIZED TYPE 2 STEEL OR REINFORCED CONCRETE PIPE WHERE THE SOIL TYPE, AS INDICATED IN THE GWINNETT COUNTY SOIL SURVEY, HAS A pH RANGE WITH pH VALUES LESS THAN 5. DETAIL 1 OR DETAIL 2 SHALL BE USED WHEN THE SOIL pH < 5. DETAIL 1 OR DETAIL 2 MAY BE USED IN LIEU OF SOIL pH TESTING FOR ALUMINIZED TYPE 2 STEEL OR REINFORCED CONCRETE PIPE. NO pH TESTING SHALL BE REQUIRED FOR HDPE, ALUMINUM PIPE, OR POLYMER PRECOAT CSP.

2.) PRE-FABRICATED, 8-MIL POLYETHYLENE SLEEVE SHALL BE SLIPPED OVER THE PIPE DURING INSTALLATION, OVERLAPPED WHERE NECESSARY, AND SECURED WITH POLYETHYLENE TAPE TO COMPLETELY PREVENT THE ENTRANCE OF SOILS.

3.) ALLOWABLE GRANULAR MATERIALS SHALL BE GRADED AGGREGATE BASE, CRUSHER RUN, GADOT FOUNDATION BACKFILL MATERIAL TYPE II, OR GADOT MECHANICALLY STABILIZED EMBANKMENT BACKFILL.

4.) BACKFILL SHALL BE COMPACTED TO 95% MAX DENSITY PER AASHTO T-99 WITHIN STREET RIGHT-OF-WAY.

1 PIPE BEDDING

N.T.S.

GWINNETT COUNTY DEPARTMENT OF TRANSPORTATION
UTILITY STREET CUT DETAIL

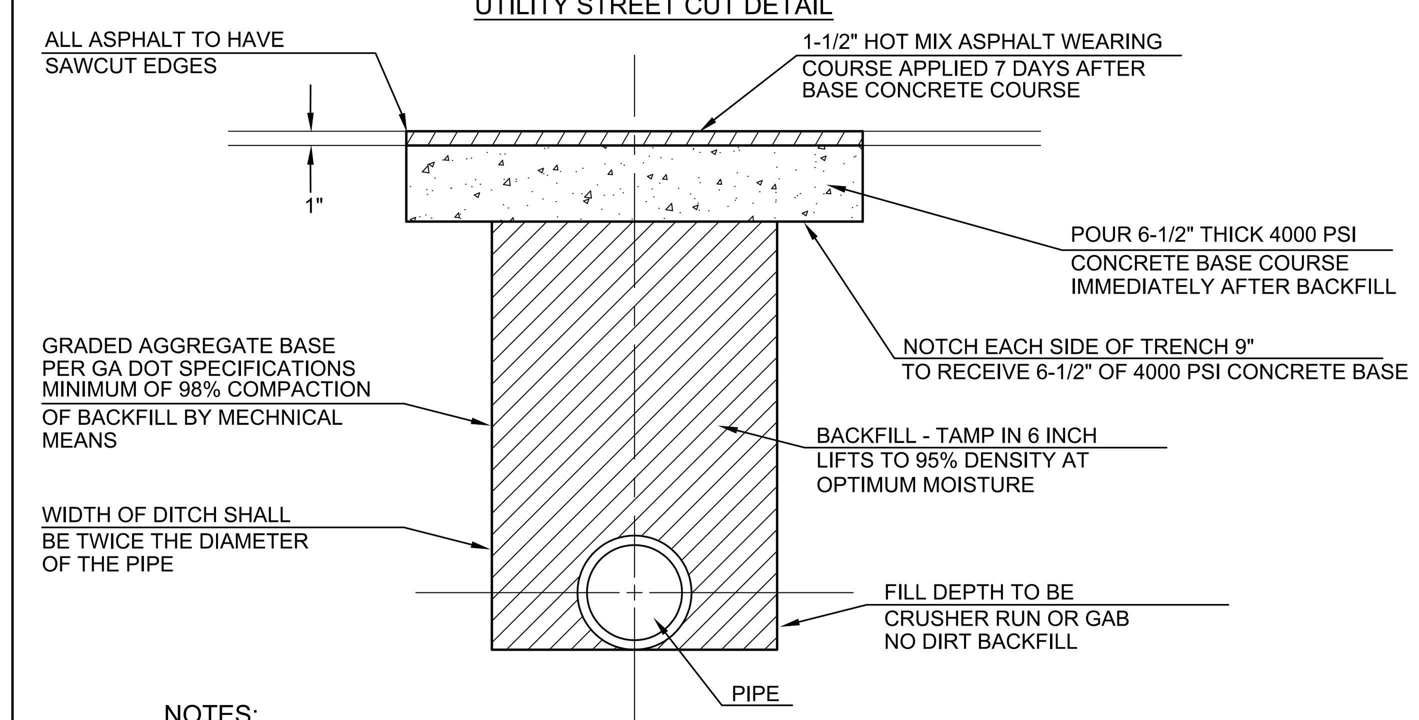

NOTES:

1. BEFORE ANY CONTRACTOR OR AGENCY CAN CUT A ROAD FOR ANY PURPOSE, AN ESCROW AGREEMENT BETWEEN THE COUNTY AND THAT CONTRACTOR OR AGENCY MUST BE SIGNED.
2. AN OPEN CUT PERMIT MUST BE OBTAINED BY THE CONTRACTOR OR AGENCY PRIOR TO THE START OF ANY DEMOLITION OR CONSTRUCTION.
3. STREET CUTS MUST BE REPAIRED IN ACCORDANCE WITH THE SPECIFICATIONS ABOVE. THE BOND WILL BE RELEASED 30 DAYS AFTER COMPLETION AND INSPECTION OF THE CONSTRUCTION. THE CONSTRUCTION MUST OCCUR UNDER THE PROTECTION OF TRAFFIC CONTROL SIGNING REQUIREMENTS OUTLINED IN THE MANUAL ON TRAFFIC CONTROL DEVICES. THE TRANSPORTATION DEPARTMENT WILL BE NOTIFIED 48 HOURS PRIOR TO CONSTRUCTION. ANY CUT LEFT OVERNIGHT WILL BE COVERED WITH STEEL PLATES SECURED TO THE PAVEMENT.
4. PERMIT HOLDER MUST CONTACT GWINNETT COUNTY ROAD MAINTENANCE AT 770-822-7414 FOR AN INSPECTION OF THE TRENCH PRIOR TO POURING THE CONCRETE BASE OR WILL FORFEIT YOUR BOND.

2 PAVEMENT PATCH FOR OPEN CUT

NTS

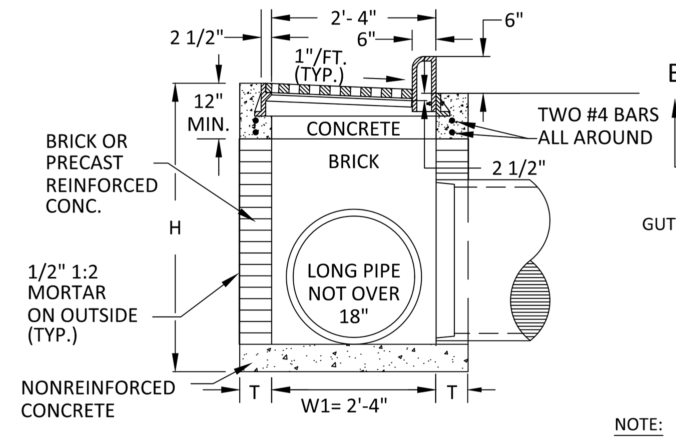

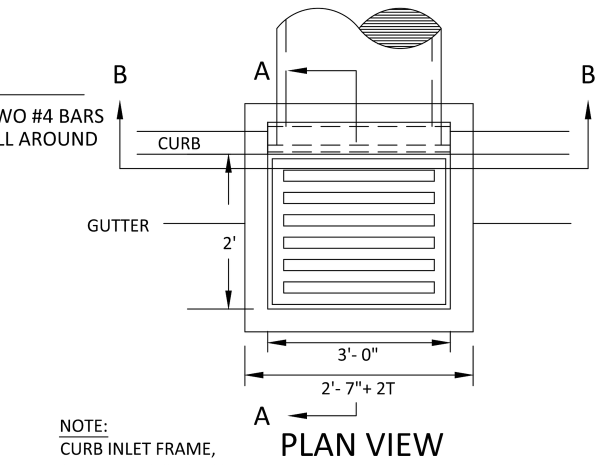

NOTE:
CURB INLET FRAME, GRATE, AND CURB BOX SHALL BE NEENAH R-3228-B WITH DIAGONAL BARS OR APPROVED EQUIVALENT.

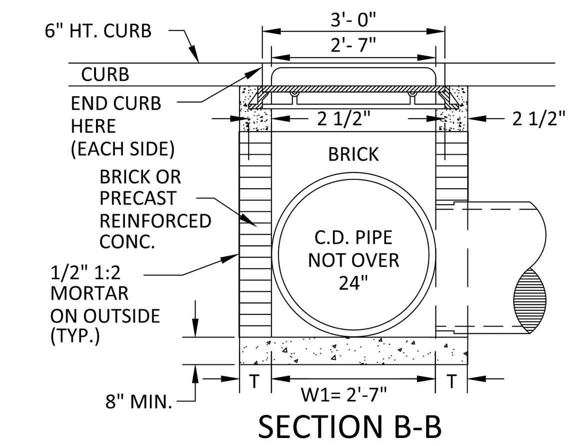

MINIMUM W1, W2, & H DIMENSIONS

PIPE SIZE	W1(MIN.) OR W2(MIN.) REINF. CONC.	H (MIN.)
15"	⊕ 1'- 8"	3'- 10"
18"	⊕ 2'- 0"	4'- 2"
24"	2'- 7"	4'- 9"
30"	3'- 6"	5'- 10"
36"	4'- 0"	6'- 5"
42"	4'- 6"	7'- 0"
48"	5'- 0"	7'- 10"
54"	5'- 6"	8'- 5"
60"	6'- 0"	9'- 0"

⊕ W1 X W2 NOT LESS THAN 2'- 4" X 2'- 7" FOR TYPE V-1 AND NOT LESS THAN 1'- 8" X 2'- 7" FOR TYPE V-2

NOTE:
THE MINIMUM H DIMENSIONS SHOWN ARE BASED ON TYPICAL OUTSIDE DIAMETERS OF PIPES AND MAY BE MODIFIED WHERE THE CITY ENGINEER OR DESIGNER DETERMINES THAT CONDITIONS PERMIT. IT IS NOT NECESSARY THAT THE BOX TYPE BASE BE SQUARE. W1 AND W2 DIMENSIONS WILL VARY ACCORDING TO PIPE SIZE.

REDUCER SLABS ARE FOR USE WITH LARGER PIPES. IN GENERAL THIS WILL BE CROSS DRAIN PIPES OVER 24", LONGITUDINAL PIPES OVER 18" (TYPE V-1) AND LONGITUDINAL PIPES OVER 15" (TYPE V-2).

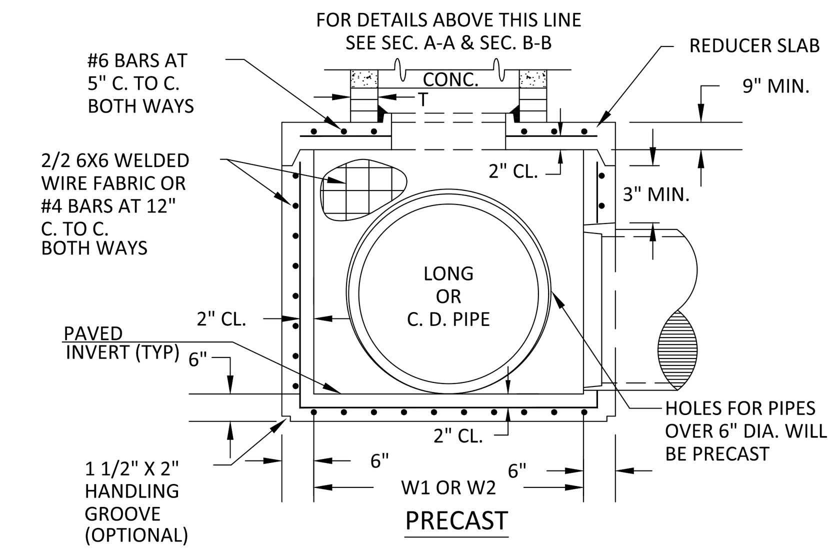

DROP INLET DIMENSIONS WITH REDUCER SLAB

3 CURB HOOD AND GRATE DETAIL

NTS

STATE	PROJECT NUMBER	SHEET NO.	TOTAL SHEETS
GA.			

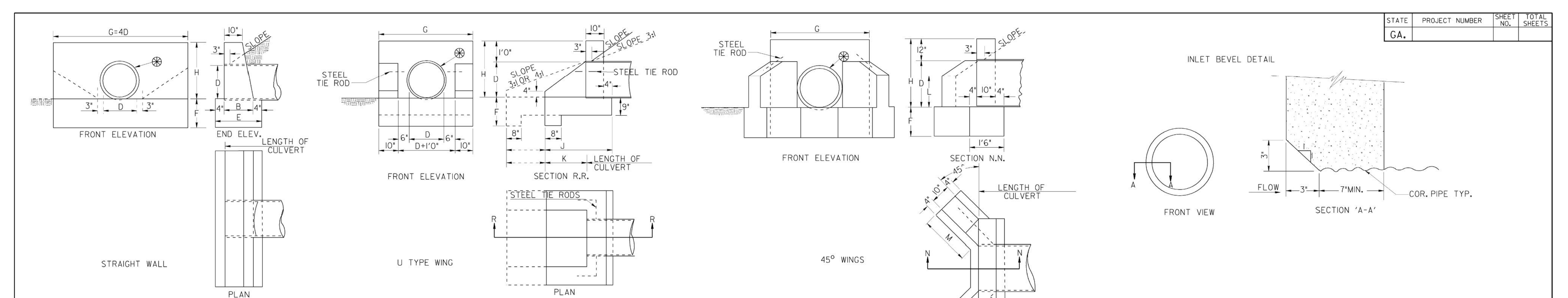

D	AREA SQ. FT.	WALL G	WALL H	WALL B	FOOTING E	FOOTING F	CUBIC FEET WALL	CUBIC FEET FOOT	TOTAL CU. FT.	TOTAL CU.YD.	CONC. IN WALL & FTG. FOR EACH ADDL. PIPE LINE CU.YD.
12"	0.8	4'0"	2'0"	1'2"	1'10"	1'0"	7.2	7.3	14.5	0.54	0.25
15"	1.2	5'0"	2'3"	1'2"	1'10"	1'2"	9.9	10.7	20.6	0.76	0.36
18"	1.8	6'0"	2'6"	1'3"	1'11"	1'3"	13.6	14.4	28.0	1.04	0.48
24"	3.1	8'0"	3'0"	1'4"	2'0"	1'4"	22.3	21.3	43.6	1.62	0.74
30"	4.9	10'0"	3'6"	1'6"	2'2"	1'6"	34.7	32.5	67.2	2.49	1.13
36"	7.1	12'0"	4'0"	1'8"	2'4"	1'8"	50.5	46.7	97.2	3.60	1.62
42"	9.6	14'0"	4'6"	1'10"	2'6"	2'0"	70.3	70.0	140.3	5.20	2.13
48"	12.6	16'0"	5'0"	2'1"	2'9"	2'0"	96.9	88.0	184.9	6.85	2.58
54"	16.0	18'0"	5'6"	2'4"	3'0"	2'0"	129.4	108.0	237.4	8.79	3.07
60"	19.6	20'0"	6'0"	2'6"	3'2"	2'0"	164.6	126.7	291.3	10.79	3.53

DIMENSIONS (OPENING, WALL, FOOTING) — QUANTITIES ONE STRAIGHT ENDWALL, CLASS "B" CONCRETE

FOR EACH ADDITIONAL PIPE LINE, ADD TO G: OD+(ID OR 3 FEET, WHICHEVER IS SMALLER)

DIMENSIONS — QUANTITIES ONE "U" ENDWALL, CLASS "B" CONCRETE

D	AREA SQ.FT	WALL G	WALL H	WALL K	FOOTING F	FOOTING J	CUBIC FEET WALL	CUBIC FEET FOOT	TOTAL CU.FT.	TOTAL CU.YD.	STEEL TIE RODS
2:1 FILL SLOPES											
12"	0.8	3'8"	2'0"	1'0"	1'3"	2'2"	6.6	7.3	13.9	0.52	NONE
15"	1.2	3'11"	2'3"	1'5"	1'3"	2'7"	8.3	9.1	17.4	0.64	NONE
18"	1.8	4'2"	2'6"	1'9"	1'3"	2'11"	9.9	10.7	20.6	0.76	NONE
24"	3.1	4'8"	3'0"	2'6"	1'6"	3'8"	13.9	15.5	29.4	1.09	2-¾"DIA.x2'0"
30"	4.9	5'2"	3'6"	3'3"	1'6"	4'5"	18.7	20.0	38.7	1.43	2-¾"DIA.x2'0"
36"	7.1	5'8"	4'0"	4'0"	1'9"	5'2"	21.2	26.2	50.4	1.87	2-¾"DIA.x2'0"
42"	9.6	6'2"	4'6"	4'9"	2'0"	5'11"	30.3	33.2	63.5	2.35	2-¾"DIA.x2'6"
48"	12.6	6'8"	5'0"	5'6"	2'0"	6'8"	37.3	39.6	76.9	2.85	2-¾"DIA.x3'0"
54"	16.0	7'2"	5'6"	6'3"	2'0"	7'5"	44.2	45.9	90.1	3.33	2-¾"DIA.x3'6"
60"	19.6	7'8"	6'0"	7'0"	2'0"	8'2"	51.1	49.1	100.2	3.71	2-¾"DIA.x4'0"
3:1 FILL SLOPES											
12"	0.8	3'8"	2'0"	2'0"	1'3"	3'2"	7.7	9.9	17.6	0.65	NONE
15"	1.2	3'11"	2'3"	2'9"	1'3"	3'11"	10.0	12.8	22.8	0.84	NONE
18"	1.8	4'2"	2'6"	3'6"	1'3"	4'8"	12.5	16.0	28.5	1.06	NONE
24"	3.1	4'8"	3'0"	5'0"	1'6"	6'2"	18.8	24.0	42.8	1.58	2-¾"DIA.x2'0"
30"	4.9	5'2"	3'6"	6'6"	1'6"	7'8"	26.3	32.3	58.6	2.17	2-¾"DIA.x2'0"
36"	7.1	5'8"	4'0"	8'0"	1'9"	9'2"	35.1	42.8	77.9	2.89	2-¾"DIA.x2'0"
42"	9.6	6'2"	4'6"	9'6"	2'0"	10'8"	45.4	54.5	99.9	3.70	2-¾"DIA.x2'6"
48"	12.6	6'8"	5'0"	11'0"	2'0"	12'2"	56.9	66.5	123.4	4.57	2-¾"DIA.x3'0"
54"	16.0	7'2"	5'6"	12'6"	2'0"	13'8"	66.7	79.5	146.2	5.41	2-¾"DIA.x3'6"
60"	19.6	7'8"	6'0"	13'4"	2'0"	17'2"	81.0	87.9	168.9	6.25	2-¾"DIA.x4'0"
4:1 FILL SLOPES											
12"	0.8	3'8"	2'0"	2'8"	1'3"	3'10"	8.4	11.8	20.2	0.75	NONE
15"	1.2	3'11"	2'3"	3'8"	1'3"	4'10"	11.2	15.5	26.6	0.98	NONE
18"	1.8	4'2"	2'6"	4'8"	1'3"	5'10"	14.3	19.6	33.9	1.26	NONE
24"	3.1	4'8"	3'0"	6'8"	1'6"	7'10"	22.0	29.8	51.8	1.92	2-¾"DIA.x2'0"
30"	4.9	5'2"	3'6"	8'8"	1'6"	9'10"	31.3	40.7	72.0	2.67	2-¾"DIA.x2'0"
36"	7.1	5'8"	4'0"	10'8"	1'9"	11'10"	42.5	54.1	96.6	3.58	2-¾"DIA.x2'0"
42"	9.6	6'2"	4'6"	12'8"	2'0"	13'10"	55.4	69.2	124.6	4.61	2-¾"DIA.x2'6"
48"	12.6	6'8"	5'0"	14'8"	2'0"	15'10"	70.0	84.8	154.8	5.73	2-¾"DIA.x3'0"
54"	16.0	7'2"	5'6"	16'8"	2'0"	17'10"	86.4	101.9	188.3	6.97	2-¾"DIA.x3'6"
60"	19.6	7'8"	6'0"	18'8"	2'0"	19'10"	104.7	120.5	225.2	8.34	2-¾"DIA.x4'0"

DIMENSIONS — QUANTITIES ONE ENDWALL WITH 45° WING WALLS, CLASS "B" CONCRETE

D	AREA SQ. FT.	WALL H	WALL G	WALL L	FOOTING M	FOOTING F	CUBIC FEET WALL	CUBIC FEET FOOT	TOTAL CU.FT.	TOTAL CU.YD.	STEEL TIE RODS
2:1 SLOPES											
18"	1.8	2'6"	3'10"	1'2"	1'7"	1'3"	9.3	10.7	20.0	0.74	NONE
24"	3.1	3'0"	4'4"	1'5"	2'1"	1'4"	13.1	14.4	27.5	1.02	2-¾"DIA.x2'0"
30"	4.9	3'6"	4'10"	1'9"	2'5"	1'6"	17.4	18.8	36.7	1.34	2-¾"DIA.x2'0"
36"	7.1	4'0"	5'4"	2'0"	2'11"	1'8"	22.6	24.6	47.2	1.75	2-¾"DIA.x3'0"
42"	9.6	4'6"	5'10"	2'3"	3'6"	2'0"	29.1	34.6	63.7	2.36	2-¾"DIA.x3'0"
48"	12.6	5'0"	6'4"	2'6"	4'0"	2'0"	35.9	39.1	75.0	2.78	2-¾"DIA.x3'0"
54"	16.0	5'6"	6'10"	2'9"	4'6¼"	2'0"	42.9	46.6	89.5	3.31	2-¾"DIA.x3'0"
60"	19.6	6'0"	7'4"	3'0"	5'0½"	2'0"	51.8	51.1	102.9	3.81	2-¾"DIA.x3'0"
3:1 SLOPES											
18"	1.8	2'6"	3'10"	1'2"	1'9"	1'3"	10.7	14.5	25.2	0.93	NONE
24"	3.1	3'0"	4'4"	1'5"	2'10"	1'4"	16.6	17.8	34.4	1.27	2-¾"DIA.x2'0"
30"	4.9	3'6"	4'10"	1'9"	3'6"	1'6"	22.9	24.4	47.3	1.71	2-¾"DIA.x2'0"
36"	7.1	4'0"	5'4"	2'1"	4'3"	1'8"	30.2	32.0	62.2	2.30	2-¾"DIA.x3'0"
42"	9.6	4'6"	5'10"	2'5"	4'11"	2'0"	38.8	44.0	82.8	3.07	2-¾"DIA.x3'0"
48"	12.6	5'0"	6'4"	2'8"	5'6"	2'0"	47.5	48.6	96.1	3.56	2-¾"DIA.x3'0"
54"	16.0	5'6"	6'10"	3'2"	6'1"	2'0"	57.0	53.4	110.4	4.09	2-¾"DIA.x3'0"
60"	19.6	6'0"	7'4"	3'6"	6'9"	2'0"	68.5	59.1	127.6	4.73	2-¾"DIA.x3'0"

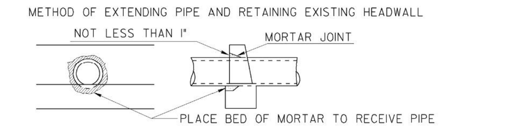

CONCRETE WITHIN THE HATCHED AREA TO BE REMOVED BY CHIPPING OR IN A MANNER APPROVED BY THE ENGINEER, FORMING A RECESS NO LESS THAN 1" LARGER THAN THE OUTSIDE DIMENSION OF THE PIPE.

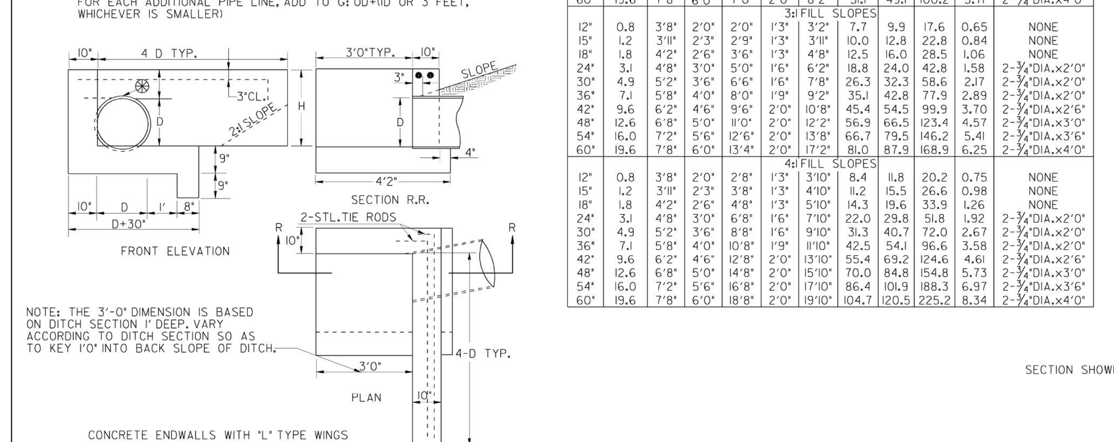

NOTE: THE 3'-0" DIMENSION IS BASED ON DITCH SECTION 1' DEEP. VARY ACCORDING TO DITCH SECTION SO AS TO KEY 1'0" INTO BACK SLOPE OF DITCH.

CONCRETE ENDWALLS WITH "L" TYPE WINGS

NOTE: THESE QUANTITIES WILL VARY ACCORDING TO DITCH SECTION AND ARE TO BE USED FOR ESTIMATING PURPOSES ONLY. PAYMENT TO BE MADE ACCORDING TO QUANTITIES MEASURED AS ACTUALLY PLACED.

DIMENSIONS — QUANTITIES ONE "L" ENDWALL

D	AREA SQ.FT.	H MIN.	4D TYP.	D+30 TYP.	CU. YD. CONC.	STEEL TIE RODS
15"	1.2	2'3"	5'0"	3'9"	1.08	2-¾"DIA.x5'0"
18"	1.8	2'6"	6'0"	4'0"	1.24	2-¾"DIA.x6'0"
24"	3.1	3'0"	8'0"	4'6"	1.59	2-¾"DIA.x8'0"
30"	4.9	3'6"	10'0"	5'0"	2.00	2-¾"DIA.x10'0"
36"	7.1	4'0"	12'0"	5'6"	2.46	2-¾"DIA.x12'0"
42"	9.6	4'6"	14'0"	6'0"	2.98	2-¾"DIA.x14'0"
48"	12.6	5'0"	16'0"	6'6"	3.53	2-¾"DIA.x16'0"
54"	16.0	5'6"	18'0"	7'0"	4.13	2-¾"DIA.x18'0"
60"	19.6	6'0"	20'0"	7'6"	4.85	2-¾"DIA.x20'0"

3:1 FILL SLOPES

NOTE:
QUANTITIES OF CONCRETE ARE BASED ON INSIDE DIAMETER OF PIPE. NO DEDUCTIONS SHALL BE MADE FOR SHELL THICKNESS OR SKEW OF PIPE IN COMPUTING PAY QUANTITIES.

SECTION SHOWING MINIMUM COVER OVER CULVERTS

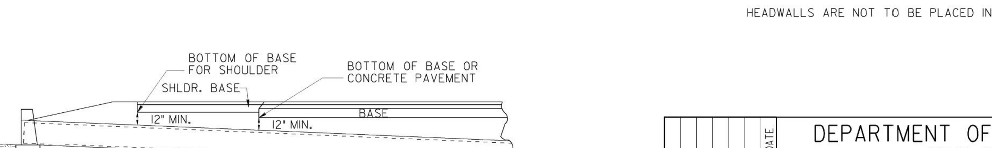

NOTE: GRADE GENERALLY TO FOLLOW SLOPE OF STREAM.

⊛ IF PIPE HAS NEITHER A GROOVE NOR A SPIGOT AT ITS INLET, AN INLET BEVEL WILL BE REQ'D.

NOTE TO DESIGNER

THIS STANDARD IS LIMITED FOR USE ONLY AT SPECIAL CONDITIONS, OTHERWISE, SEE CURRENT STANDARDS 1120 & 1125.

HEADWALLS ARE NOT TO BE PLACED INSIDE THE CLEAR ZONE.

DEPARTMENT OF TRANSPORTATION
STATE OF GEORGIA

STANDARD
PIPE CULVERT
CONCRETE HEADWALL

NO SCALE — REV. & REDR. AUG. 1999
DESIGNED / TRACED / CHECKED
(SUBMITTED) STATE ROAD & AIRPORT DESIGN ENGINEER
(APPROVED) CHIEF ENGINEER
NUMBER 1001-B

4 CONRETE HEADWALL

NTS

GWINNETT COUNTY DEPARTMENT OF PLANNING & DEVELOPMENT
STANDARD DRAWING MANHOLE CASTINGS
NON-TRAFFIC AREAS DETAIL # 611

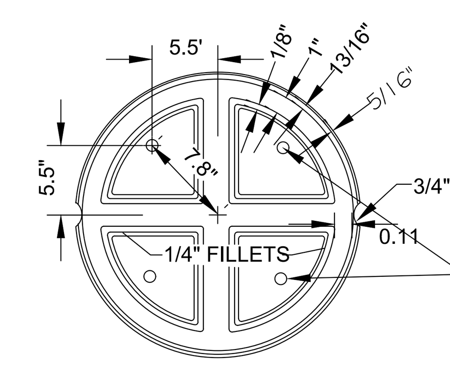

BOTTOM VIEW

LID BY U.S. FOUNDARY: #EO "GWINNETT COUNTY STORM WATER - NO DUMPING" OR APPROVED EQUAL.

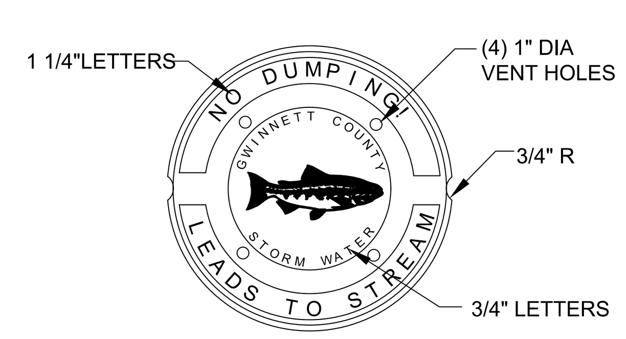

TOP VIEW

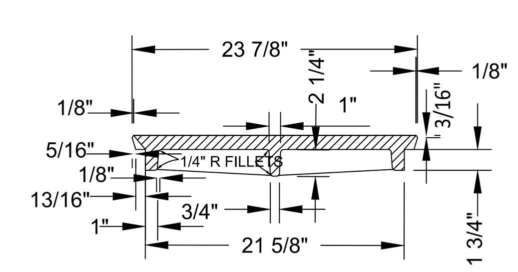

COVER SECTION

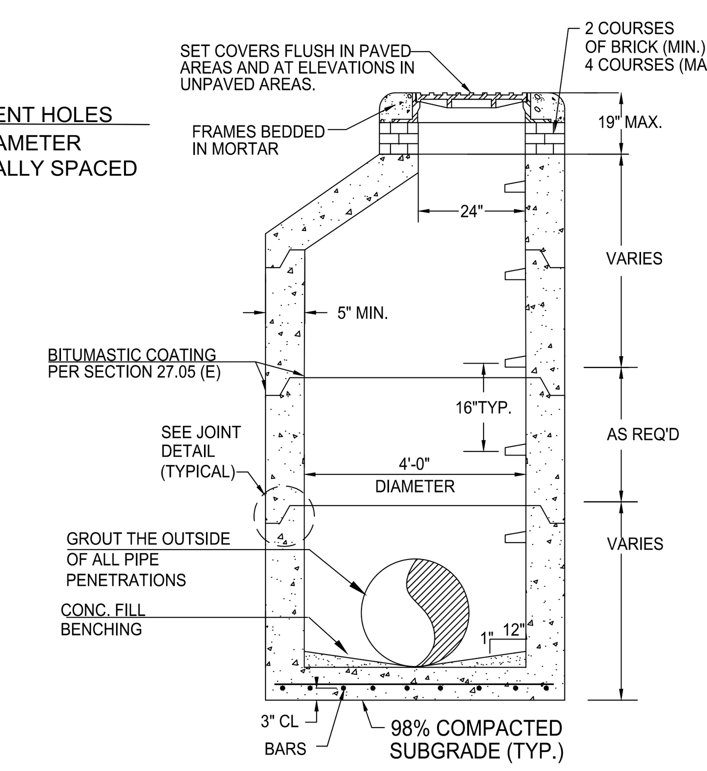

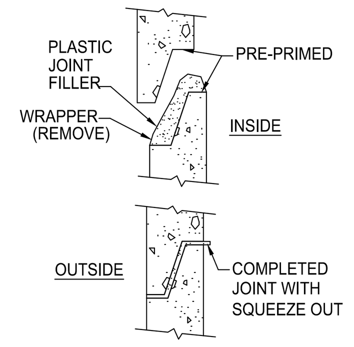

JOINT DETAIL

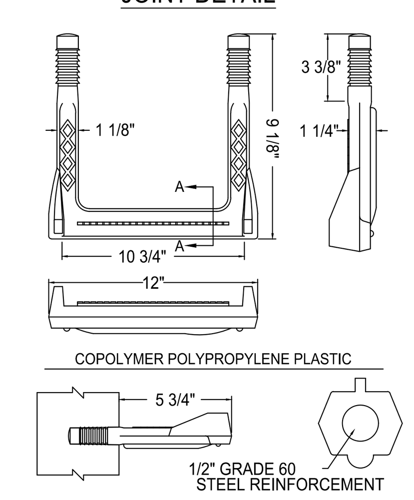

STEP DETAIL

NOTES:

1. THIS DETAIL IS FOR 4'-0" (INSIDE DIAMETER) MANHOLE UP TO 12' DEEP.
2. PRECAST REINFORCED CONCRETE TOPS, RISERS, BASES AND REBARS SHALL CONFORM TO LATEST ASTM C-478 STD. SPECS.
3. INTERIOR AND CEILING OF MANHOLE SHALL BE COATED IN ACCORDANCE WITH SPECS.
4. MANUFACTURER CERTIFICATION THAT MANHOLE MEETS ASTM SPECIFICATION SHALL BE SUBMITTED
5. MANHOLE STEPS TO BE INSTALLED IN A VERTICAL ROW ON 16" CENTERS.

JUNCTION BOX SHOWN TO MEET GADOT STD. 1011A STANDARD PRECAST REINFORCED CONCRETE MANHOLE

5 LID AND STORM STRUCTURE DETAIL

N.T.S.

24 HOUR CONTACT
CITY OF DACULA
BRITTNI NIX
BRITTNI.NIX@DACULAGA.GOV
770-963-7451

GEORGIA811
www.Georgia811.com

Bowman
Certificate of Authorization License No. LSF001241
Bowman Consulting Group Ltd
4174 Silver Peak Parkway
Suwanee, GA 30024
Phone: (770) 932-6550
www.bowman.com
© 2021 Bowman Consulting Group Ltd

CONSTRUCTION DETAILS
2025 CDBG FOR CITY OF DACULA
SANJO STREET WIDENING, PAVING, DRAINAGE, AND SIDEWALK IMPROVEMENTS PROJECT
CITY OF DACULA, GA
GWINNETT COUNTY

CONSULTANT PROJECT #
200577-01-001

LEVEL II E&S CERT.#90012
EXP. DATE 12/19/2028

PLAN STATUS	
11/21/2025	BID SET
DATE	DESCRIPTION

KDW	RWH	SAD
DESIGN	DRAWN	CHKD

SCALE .
JOB No. 24-204(200577-01-001)
DATE : 11/14/2025
FILE No.
SHEET No. C700

November 21, 2025
File Path V:\200523 - City of Dacula\200523-01-001 (ENG) - Administrative Building\Engineering\Engineering Plans\SANJO SHEETS\200577-01-D SANJO C700 DTL.dwg
THIS DOCUMENT, TOGETHER WITH THE CONCEPTS AND DESIGNS PRESENTED HEREIN, AS AN INSTRUMENT OF SERVICE, IS INTENDED ONLY FOR THE SPECIFIC PURPOSE AND CLIENT FOR WHICH IT WAS PREPARED. REUSE OF AND IMPROPER RELIANCE ON THIS DOCUMENT WITHOUT WRITTEN AUTHORIZATION AND ADAPTATION BY BOWMAN CONSULTING SHALL BE WITHOUT LIABILITY TO BOWMAN CONSULTING.

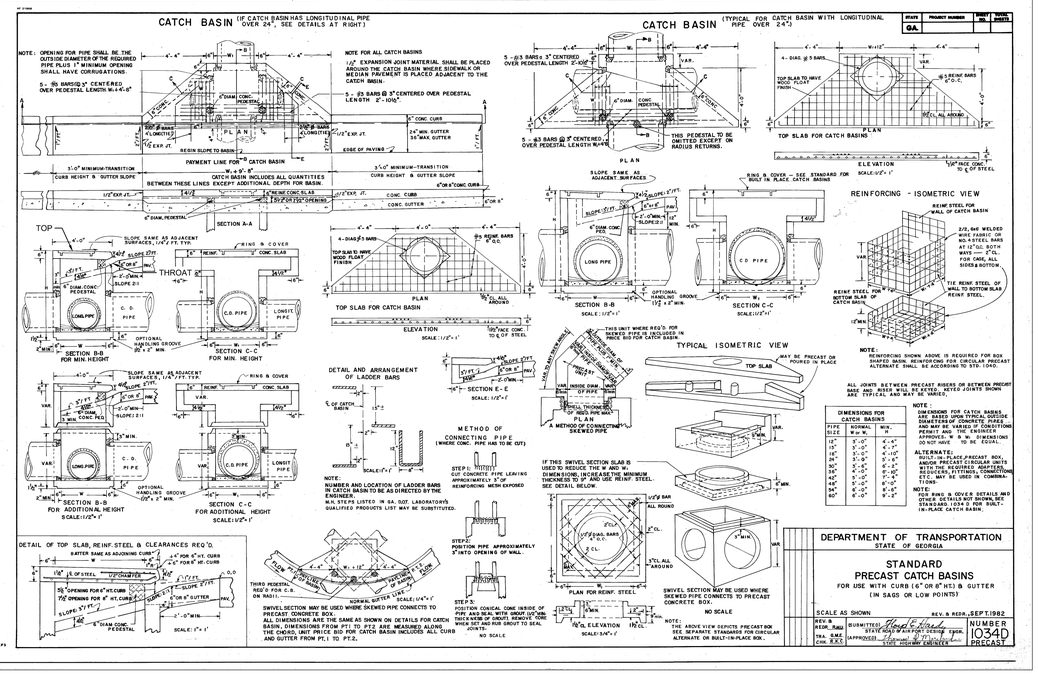

1 .

NTS

2 DOUBLE WING CATCH BASIN DETAIL (GADOT STD. 1034D)

NTS

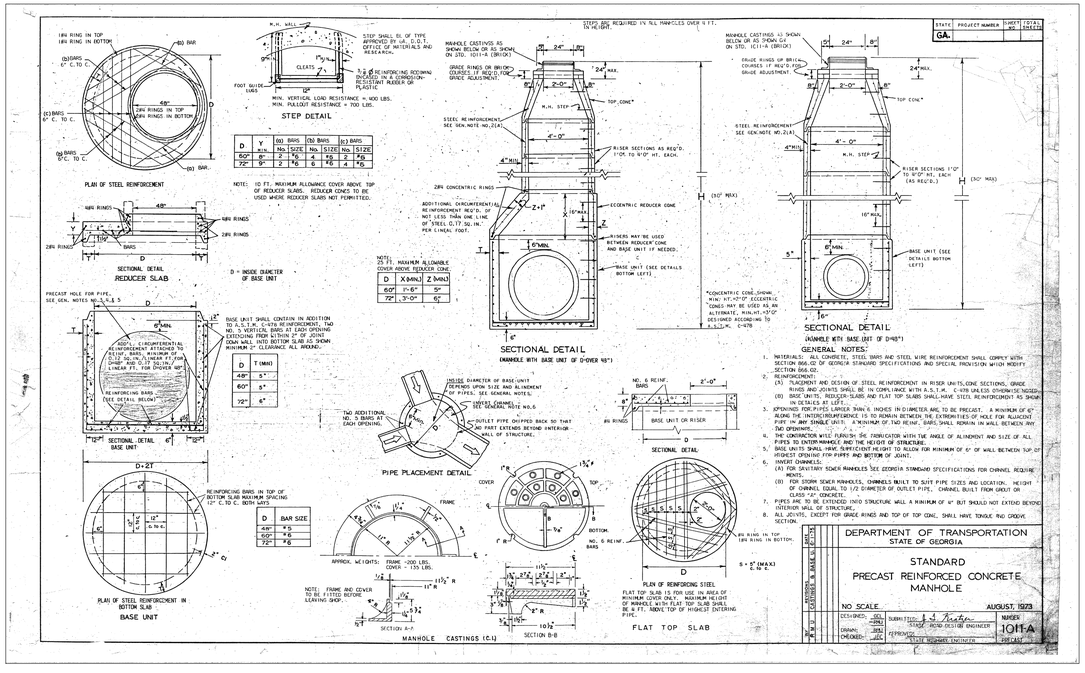

3 JUNCTION BOX (JB) GADOT STD. 1011A

N.T.S.

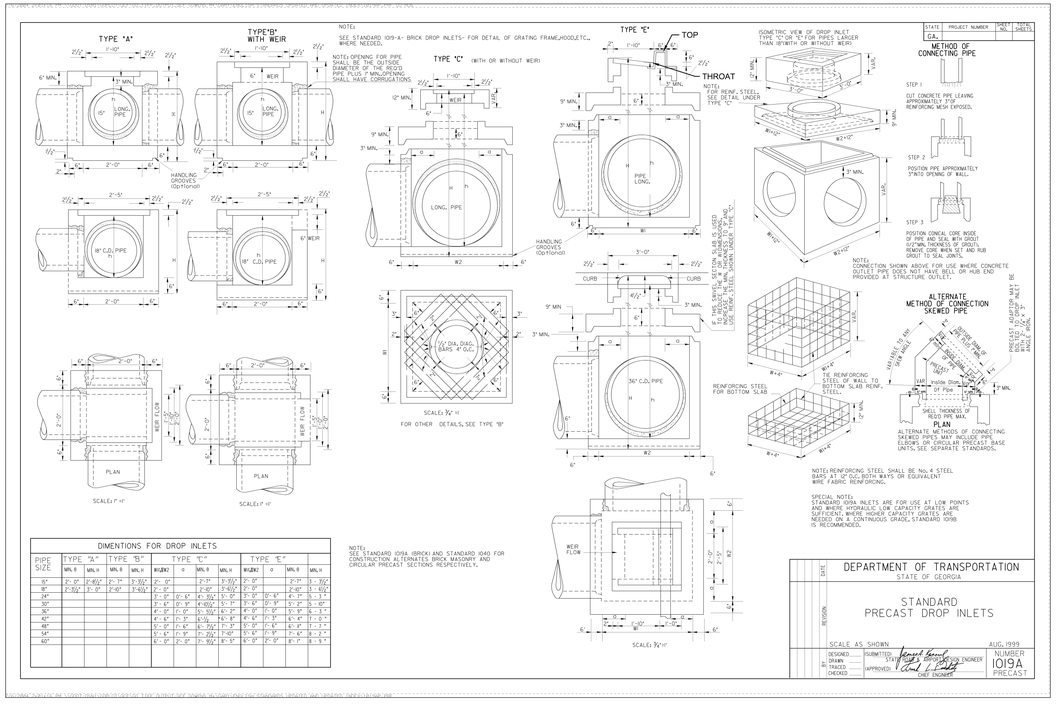

4 DROP INLET (DI) GADOT STD. 1019A

N.T.S.

24 HOUR CONTACT
CITY OF DACULA
BRITTNI NIX
BRITTNI.NIX@DACULAGA.GOV
770-963-7451

Bowman

Certificate of Authorization License No. LSF001241

Bowman Consulting Group Ltd
4174 Silver Peak Parkway
Suwanee, GA 30024
Phone: (770) 932-6550
www.bowman.com

© 2021 Bowman Consulting Group Ltd

CONSTRUCTION DETAILS
2025 CDBG FOR CITY OF DACULA
SANJO STREET WIDENING, PAVING, DRAINAGE, AND SIDEWALK IMPROVEMENTS PROJECT
CITY OF DACULA, GA
GWINNETT COUNTY

CONSULTANT PROJECT #
200577-01-001

LEVEL II E&S CERT.#90012
EXP. DATE 12/19/2028

PLAN STATUS

11/21/2025	BID SET

DATE	DESCRIPTION
KDW DESIGN	RWH DRAWN
SAD CHKD	

SCALE .

JOB No. 24-204(200577-01-001)

DATE : 11/14/2025

FILE No.

SHEET No. C701

November 21, 2025
File Path:V:\200523 - City of Dacula\200523-01-001 (ENG) - Administrative Building\Engineering\Engineering Plans\SANJO SHEETS\200577-01-D SANJO C700 DTL.dwg
THIS DOCUMENT, TOGETHER WITH THE CONCEPTS AND DESIGNS PRESENTED HEREIN, AS AN INSTRUMENT OF SERVICE, IS INTENDED ONLY FOR THE SPECIFIC PURPOSE AND CLIENT FOR WHICH IT WAS PREPARED. REUSE OF AND RELIANCE ON THIS DOCUMENT WITHOUT WRITTEN AUTHORIZATION AND ADAPTATION BY BOWMAN CONSULTING SHALL BE WITHOUT LIABILITY TO BOWMAN CONSULTING.

GEORGIA811
www.Georgia811.com

NOTE:
1. MINIMUM OF 4" G.A.B. BASE UNDER CURB & GUTTER TYPICAL.
2. COMPACTED SUBGRADE A MINIMUM OF 98% MODIFIED PROCTOR.
3. CONCRETE SHALL BE 3000 PSI CLASS A.

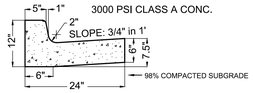

A STANDARD 6" x 12" x 24" CONCRETE CURB AND GUTTER (C&G)

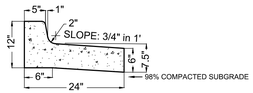

B STANDARD 6" x 12" x 24" SPILL CONCRETE CURB AND GUTTER (C&G)

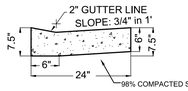

C STANDARD 6" x 6" x 24" ZERO HEIGHT CONCRETE CURB AT DRIVEWAY

1 24" CONCRETE CURB & GUTTER DETAIL
NTS

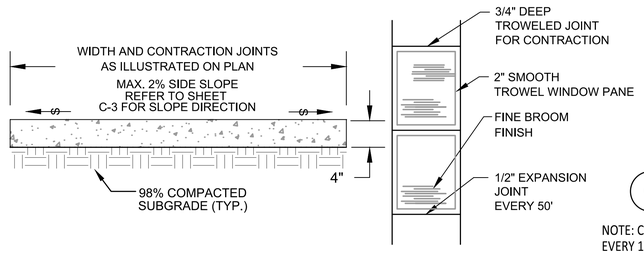

NOTES:
1. SIDEWALK TO BE CONSTRUCTED OF CLASS "A"-3000 PSI CONCRETE WITH 100% VIRGIN POLYPROPYLENE FIBRILLATED FIBERS ADDED AT THE RATE OF 1.5 LBS PER CUBIC YARD.

2 CONCRETE SIDEWALK DETAIL
NTS

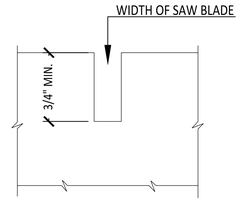

C CONTRACTION JOINT SEAL
NTS

NOTE: CONTRACTION JOINTS EVERY 10' OR AS SHOWN

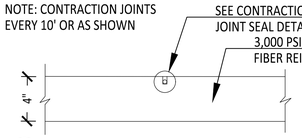

A CONTRACTION JOINT
NTS

SEAL ALL EXPANSION JOINTS TOP WITH BASF MASTERSEAL NP2 MULTI-COMPONENT HIGH PERFORMANCE POLYURETHANE SEALANT, OR APPROVED EQUAL. SUBMIT GRAY COLOR SAMPLES FOR THE OWNER'S APPROVAL .

UTILIZE "SNAP-CAP", "VOID CAP" OR, APPROVED EQUAL WITH REMOVABLE OTHER 1/2" X 1/2" CAP TO CREATE VOID SPACE FOR SEALER.

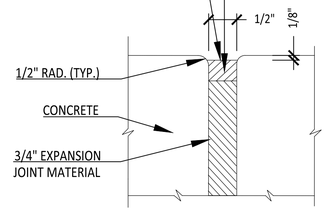

NOTE: EXPANSION JOINTS EVERY 50' MINIMUM, OR AS SHOWN

B EXPANSION JOINT
NTS

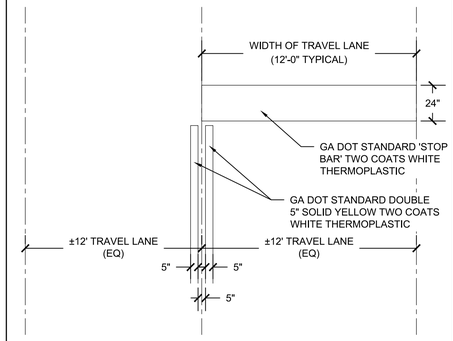

NOTES:
1. ALL TRAFFIC TO INSTALLED PER GEORGIA DOT STANDARDS.
2. REFER TO GA DOT STANDARD 'T-11A'.
3. ALL STRIPING SHALL CONFORM TO LATEST EDITION OF MANUAL ON UNIFORM TRAFFIC CONTROL DEVICES (M.U.T.C.D.) AND ANY SUPPLEMENTS THERETO.

3 TRAFFIC MARKINGS
NTS

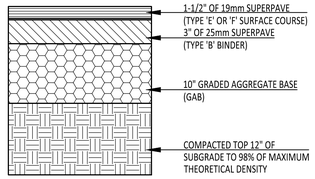

LOCAL COMMERCIAL PAVEMENT
NTS

4 PAVEMENT DETAILS
N.T.S.

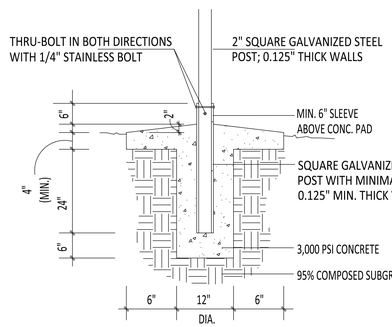

POST FOUNDATION - SECTION

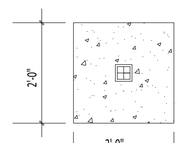

SINGLE SUPPORT

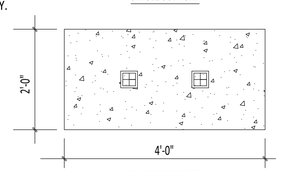

DOUBLE SUPPORT

5 SIGN FOOTING DETAIL
N.T.S.

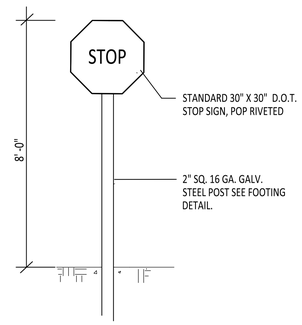

GENERAL NOTES:

1. ALL SIGNS, EXCEPT STOP SIGNS SHALL COMPLY W/ ANSI 117.1-86, 4.30
2. REFERENCE DETAIL 7/C702 FOR FOOTING AND PAD INSTALLATION DETAILS.

6 STOP SIGN DETAIL
N.T.S.

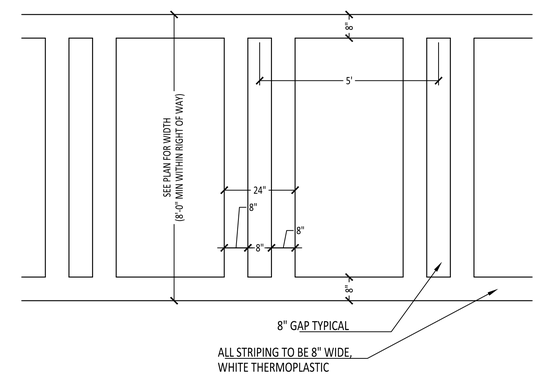

7 GADOT STANDARD CROSSWALK MARKINGS DETAIL
N.T.S.

A 75,000 MAX WEIGHT FIRE TRUCK HAS 22,265 LBS ON FRONT AXLE AND 52,735 LBS ON THE REAR AXLES. THAT'S 26,368 LBS PER AXLE AND 13,184 LBS PER TIRE. USING 8" X 8" SURFACE AREA FOR TIRE CONTACT, YOU HAVE 64 SQ. INCHES. 13,184 LBS / 64 SQ. IN. = 206 PSI REQUIRED. PAVERS ARE A MINIMUM 10,000 PSI.

IN VEHICULAR DRIVE AREAS

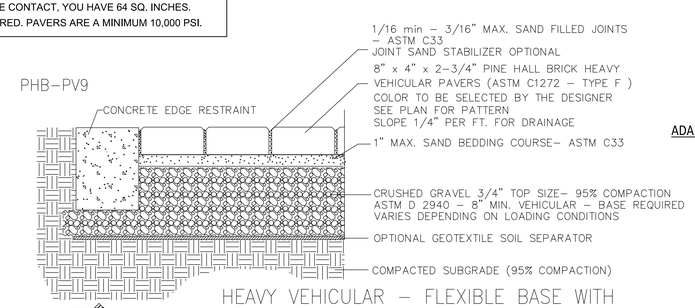

HEAVY VEHICULAR – FLEXIBLE BASE WITH OPTIONAL GEOTEXTILE SEPARATORS

A

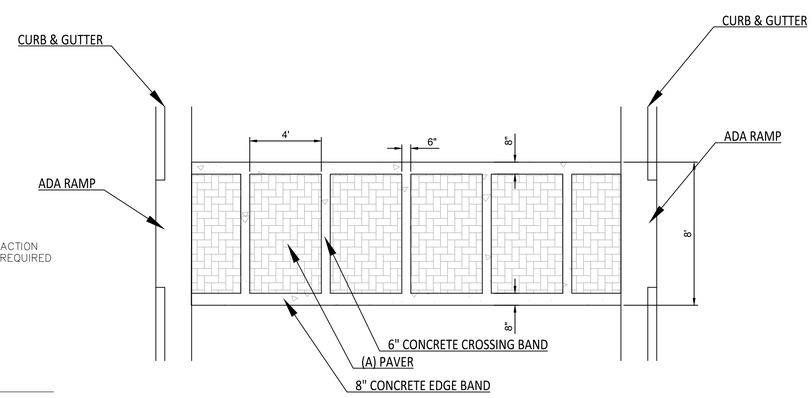

SCALE: NOT TO SCALE

8 PAVER CROSSWALK DETAIL
N.T.S.

GEORGIA811
www.Georgia811.com

24 HOUR CONTACT
CITY OF DACULA
BRITTNI NIX
BRITTNI.NIX@DACULAGA.GOV
770-963-7451

Bowman
Certificate of Authorization License No. LSF001241

Bowman Consulting Group Ltd
4174 Silver Peak Parkway
Suwanee, GA 30024
Phone: (770) 932-6550
www.bowman.com

© 2021 Bowman Consulting Group Ltd

CONSTRUCTION DETAILS
2025 CDBG FOR CITY OF DACULA
SANJO STREET WIDENING, PAVING, DRAINAGE, AND SIDEWALK IMPROVEMENTS PROJECT
CITY OF DACULA, GA
GWINNETT COUNTY

CONSULTANT PROJECT #
200577-01-001

GEORGIA REGISTERED PROFESSIONAL ENGINEER
PE042807
VUONG Q. DANG
11/21/25

LEVEL II E&S CERT.#00012
EXP. DATE 12/19/2028

PLAN STATUS	
11/21/2025	BID SET

DATE	DESCRIPTION

KDW	RWH	SAD
DESIGN	DRAWN	CHKD

SCALE .
JOB No. 24-204(200577-01-001)
DATE : 11/14/2025
FILE No.
SHEET No. C702

November 21, 2025
File Path:V:\200523 - City of Dacula\200523-01-001 (ENG) - Administrative Building\Engineering\Engineering Plans\SAN JO SHEETS\200577-01-D SAN JO C700 DTL.dwg

THIS DOCUMENT, TOGETHER WITH THE CONCEPTS AND DESIGNS PRESENTED HEREIN, IS AN INSTRUMENT OF SERVICE, IS INTENDED ONLY FOR THE SPECIFIC PURPOSE AND CLIENT FOR WHICH IT WAS PREPARED. REUSE OF AND IMPROPER RELIANCE ON THIS DOCUMENT WITHOUT WRITTEN AUTHORIZATION AND ADAPTATION BY BOWMAN CONSULTING SHALL BE WITHOUT LIABILITY TO BOWMAN CONSULTING.

November 21, 2025
File Path V:\200523 - City of Dacula\200523-01-001 (ENG) - Administrative Building\Engineering\Engineering Plans\SANJO SHEETS\200577-01-D SANJO C700 DTL.dwg
THIS DOCUMENT, TOGETHER WITH THE CONCEPTS AND DESIGNS PRESENTED HEREIN, AS AN INSTRUMENT OF SERVICE, IS INTENDED ONLY FOR THE SPECIFIC PURPOSE AND CLIENT FOR WHICH IT WAS PREPARED. REUSE OF AND IMPROPER RELIANCE ON THIS DOCUMENT WITHOUT WRITTEN AUTHORIZATION AND ADAPTATION BY BOWMAN CONSULTING SHALL BE WITHOUT LIABILITY TO BOWMAN CONSULTING.

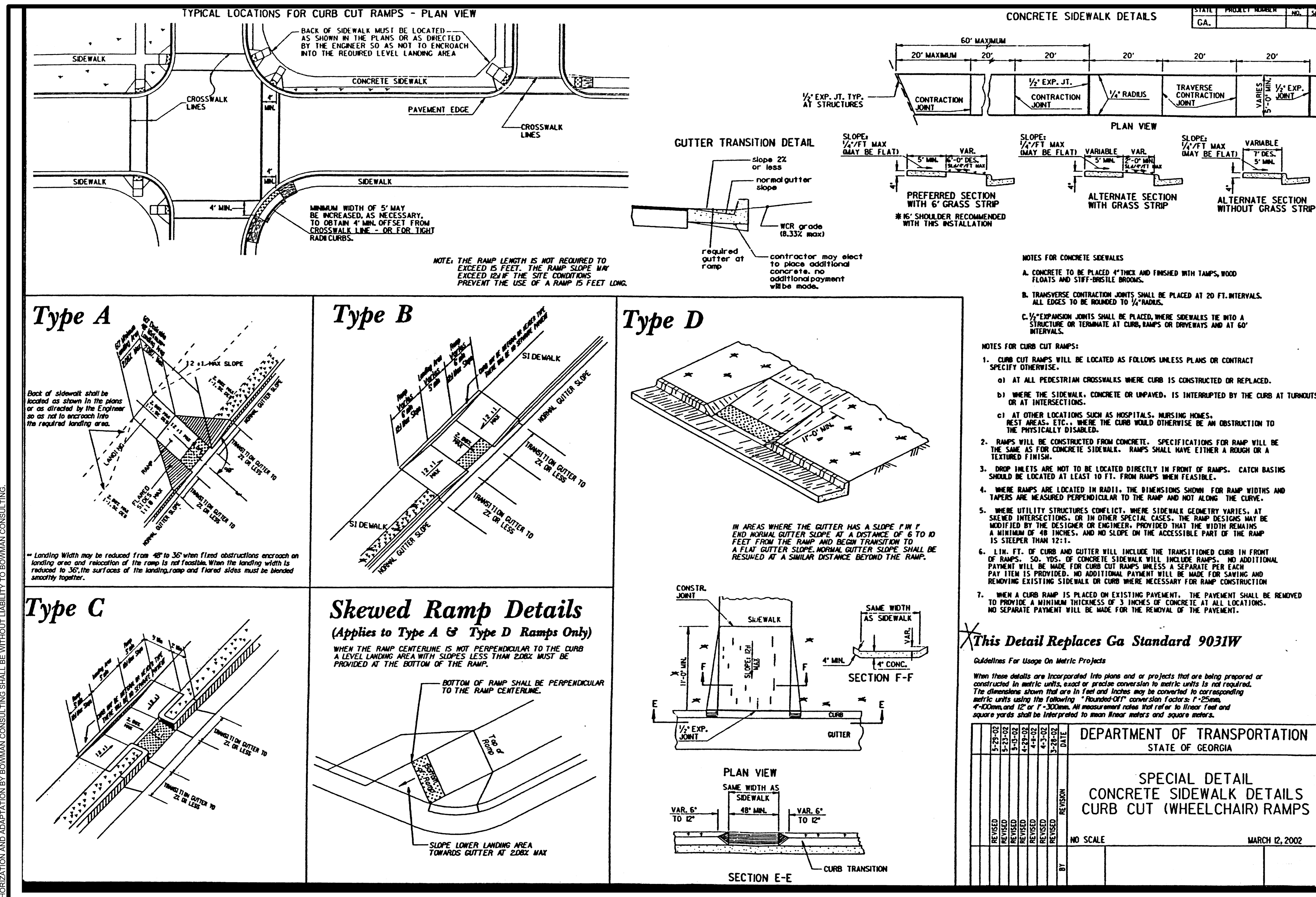

1 ADA RAMP DETAIL

N.T.S.

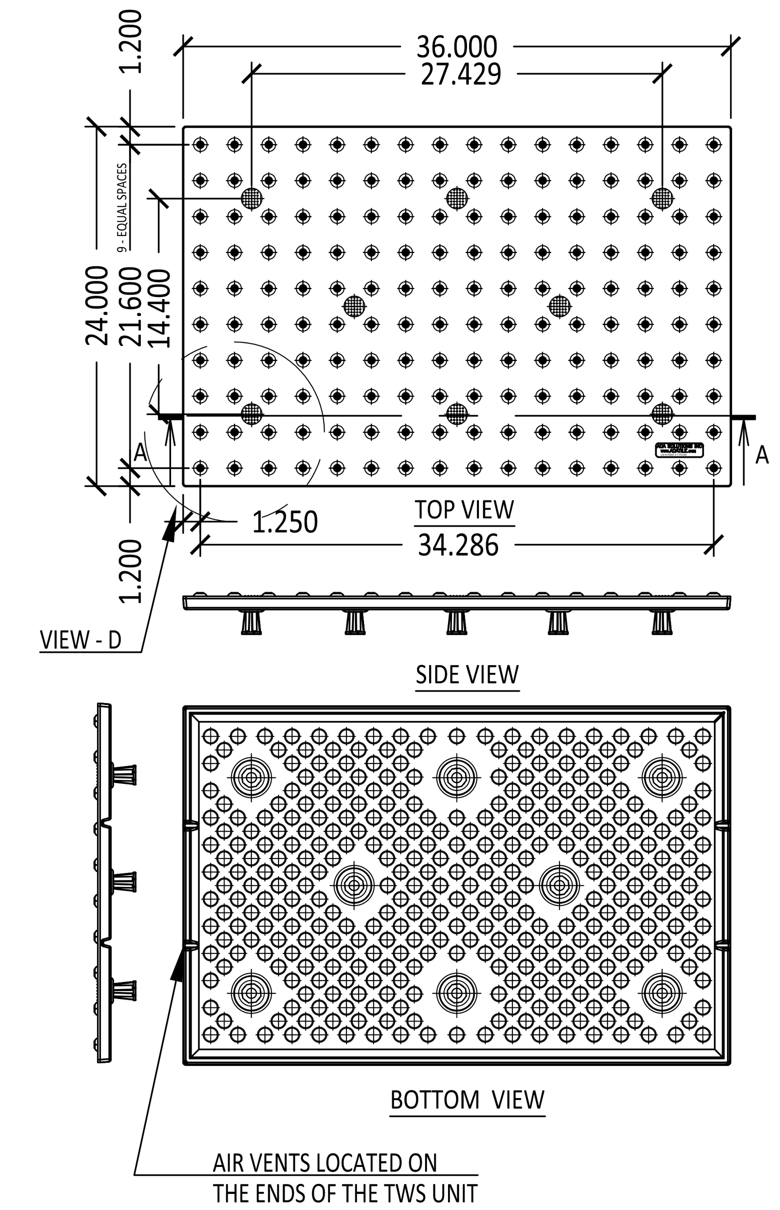

NOTES:

1. PRODUCT TO BE: CAST IN PLACE REPLACEABLE TACTILE WARNING SURFACE TILES AS MANUFACTURED BY ADA SOLUTIONS, INC., OR APPROVED EQUAL.
2. TACTILE WARNING PRODUCTS SHALL BE INSTALLED AS PER MANUFACTURER'S INSTRUCTIONS.
3. COLOR TO BE BRICK RED.
4. UNITS SHALL BE 24" WIDE. LENGTHS MAY VARY DEPENDING ON INSTALLATION LOCATION. CONTRACTOR TO SUBMIT LAYOUT PLAN FOR UNITS FOR APPROVAL.

2 ADA DETECTIBLE STRIP DETAIL

N.T.S.

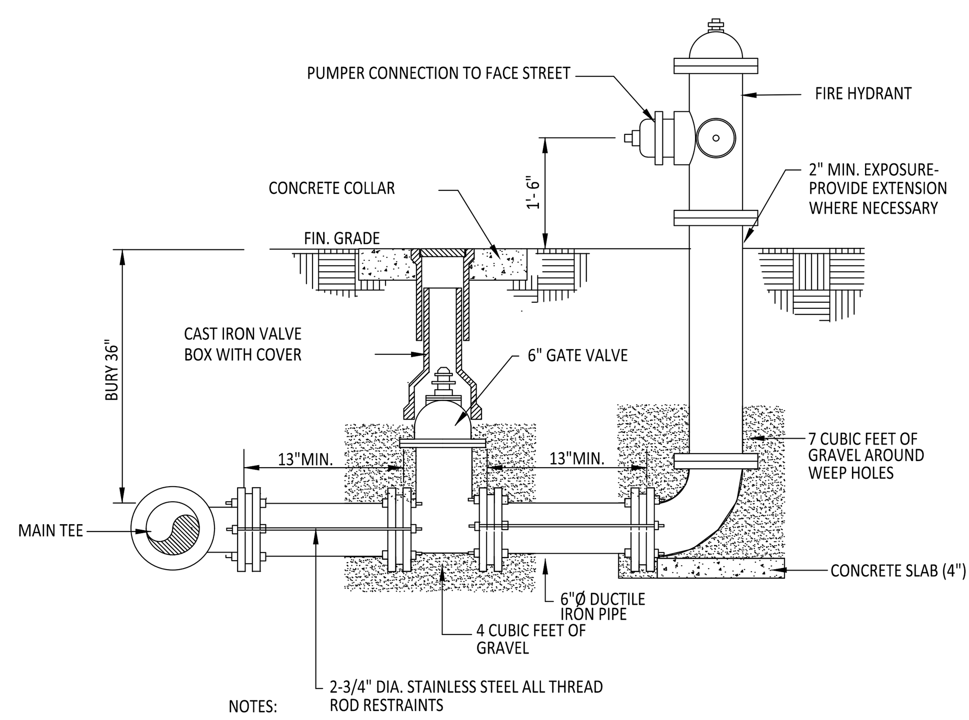

NOTES:

1. ALL JOINTS FROM MAIN TO HYDRANT SHALL BE RESTRAINED.
2. PROTECT BOLTS AND THREADS FROM CONCRETE.
3. SEE WATER SYSTEM SPECS. HYDRANTS.

4 FIRE HYDRANT

N.T.S.

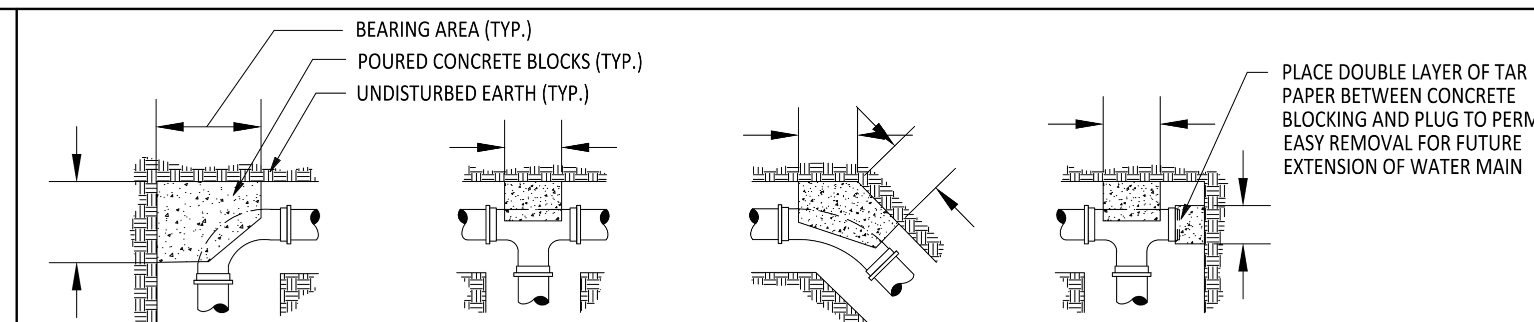

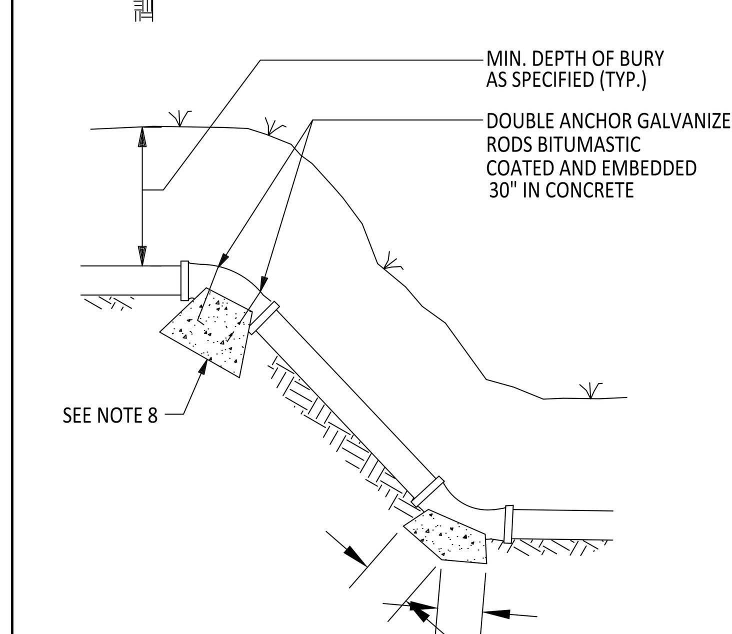

VERTICAL BEND

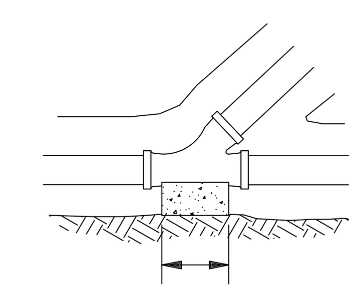

WYE

ANCHOR ROD SIZE	
PIPE SIZE	ROD SIZE
4" THRU 6"	#4
8" THRU 10"	#6
12" THRU 18"	#8
20" THRU 24"	#10

PIPE FITTING SIZES	BEARING AREA OF BLOCK IN SQ.FT.				
	TEE & END	90° BEND	45° BENDS & WYES	22 1/2° BEND	11 1/4° BEND
4"	0.8	1.2	0.6	--	--
6"	1.9	2.6	1.4	0.7	0.4
8"	3.3	4.6	2.5	1.3	0.7
10"	5.0	7.1	3.9	2.0	1.0
12"	7.2	10.1	5.5	2.9	1.5
14"	9.7	13.7	7.5	3.9	2.0
16"	12.7	17.8	9.7	5.0	2.6
20"	19.6	27.5	15.1	7.8	4.0

THRUST BLOCK NOTES:

1. KEEP CONCRETE CLEAR OF JOINT AND JOINT ACCESSORIES.
2. CONCRETE THRUST BLOCKING SHALL BE POURED AGAINST UNDISTURBED EARTH.
3. THRUST BLOCKS FOR VERTICAL BENDS HAVING DOWNWARD RESULTANT THRUSTS SHALL BE THE SAME AS FOR HORIZONTAL BENDS.
4. BEARING AREAS, VOLUMES, AND SPECIAL BLOCKING DETAILS SHOWN ON PLANS TAKE PRECEDENCE OVER THIS STANDARD.
5. TAPPING VALVES SHALL HAVE THRUST BLOCKING AS SPECIFIED FOR TEES.
6. CONTRACTOR SHALL PROVIDE RESTRAINT AT ALL PRESSURE LINE FITTINGS USING EITHER CONCRETE BLOCKING OR TIE ROD ASSEMBLIES.
7. CONCRETE FOR THRUST BLOCKS SHALL BE 3000 PSI MINIMUM STRENGH.
8. ANCHOR BLOCKS FOR VERTICAL BENDS SHALL BE SIZED AS 90 BENDS REGARDLESS OF ANGLE.

5 THRUST BLOCKING DETAIL

N.T.S.

GEORGIA811
www.Georgia811.com

24 HOUR CONTACT
CITY OF DACULA
BRITTNI NIX
BRITTNI.NIX@DACULAGA.GOV
770-963-7451

Bowman
Certificate of Authorization License No. LSF001241
Bowman Consulting Group Ltd
4174 Silver Peak Parkway
Suwanee, GA 30024
Phone: (770) 932-6550
www.bowman.com
© 2021 Bowman Consulting Group Ltd

CONSTRUCTION DETAILS
2025 CDBG FOR CITY OF DACULA
SANJO STREET WIDENING, PAVING, DRAINAGE, AND SIDEWALK IMPROVEMENTS PROJECT
CITY OF DACULA, GA
GWINNETT COUNTY

CONSULTANT PROJECT # 200577-01-001

GEORGIA REGISTERED PROFESSIONAL ENGINEER PE042037 VUONG Q. DANG 11/21/25

LEVEL II E&S CERT.#90012
EXP. DATE 12/19/2028

PLAN STATUS	
11/21/2025	BID SET
DATE	DESCRIPTION

KDW	RWH	SAD
DESIGN	DRAWN	CHKD

SCALE .
JOB No. 24-204(200577-01-001)
DATE : 11/14/2025
FILE No.
SHEET No. C703