CDBG PROJECT FOR MCMILLAN ROAD PAVING, DRAINAGE, AND SIDEWALK IMPROVEMENTS FOR CITY OF DACULA

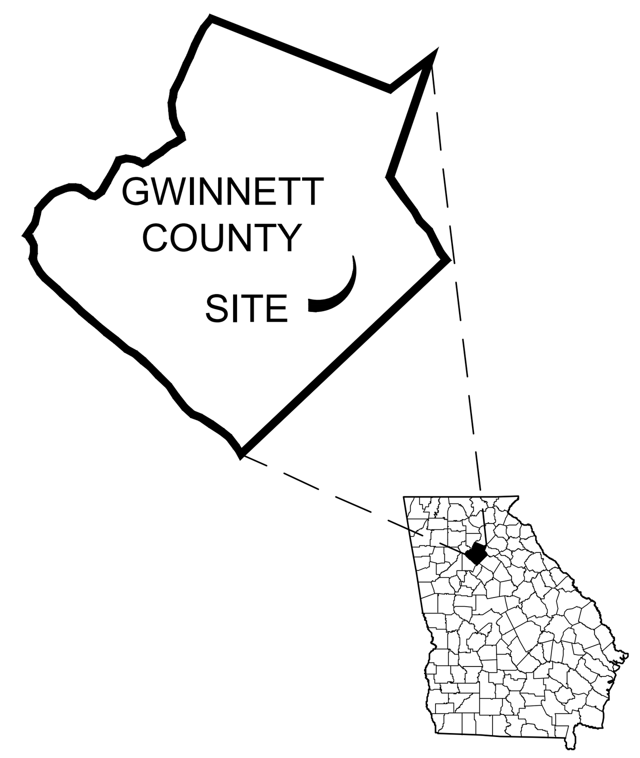

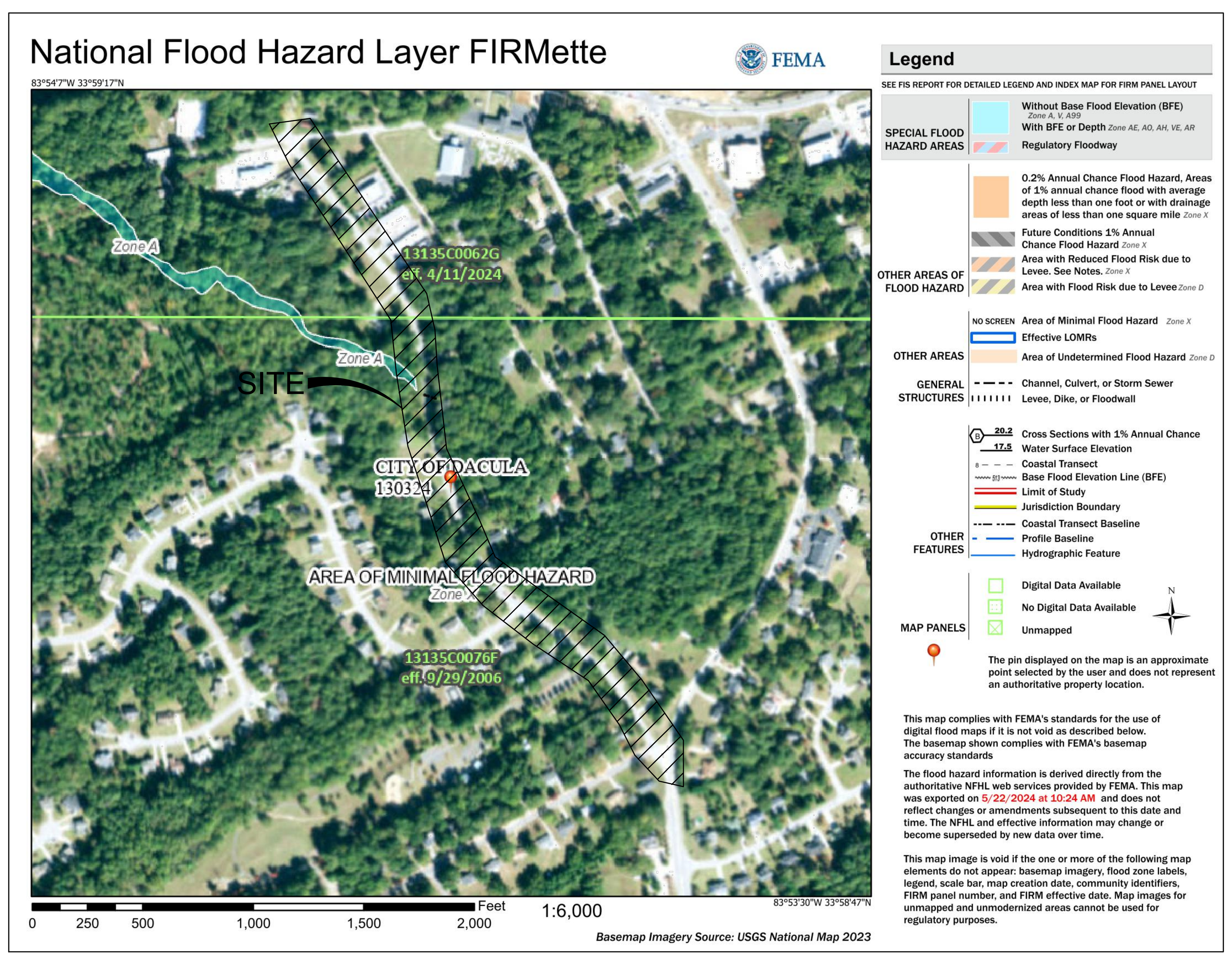

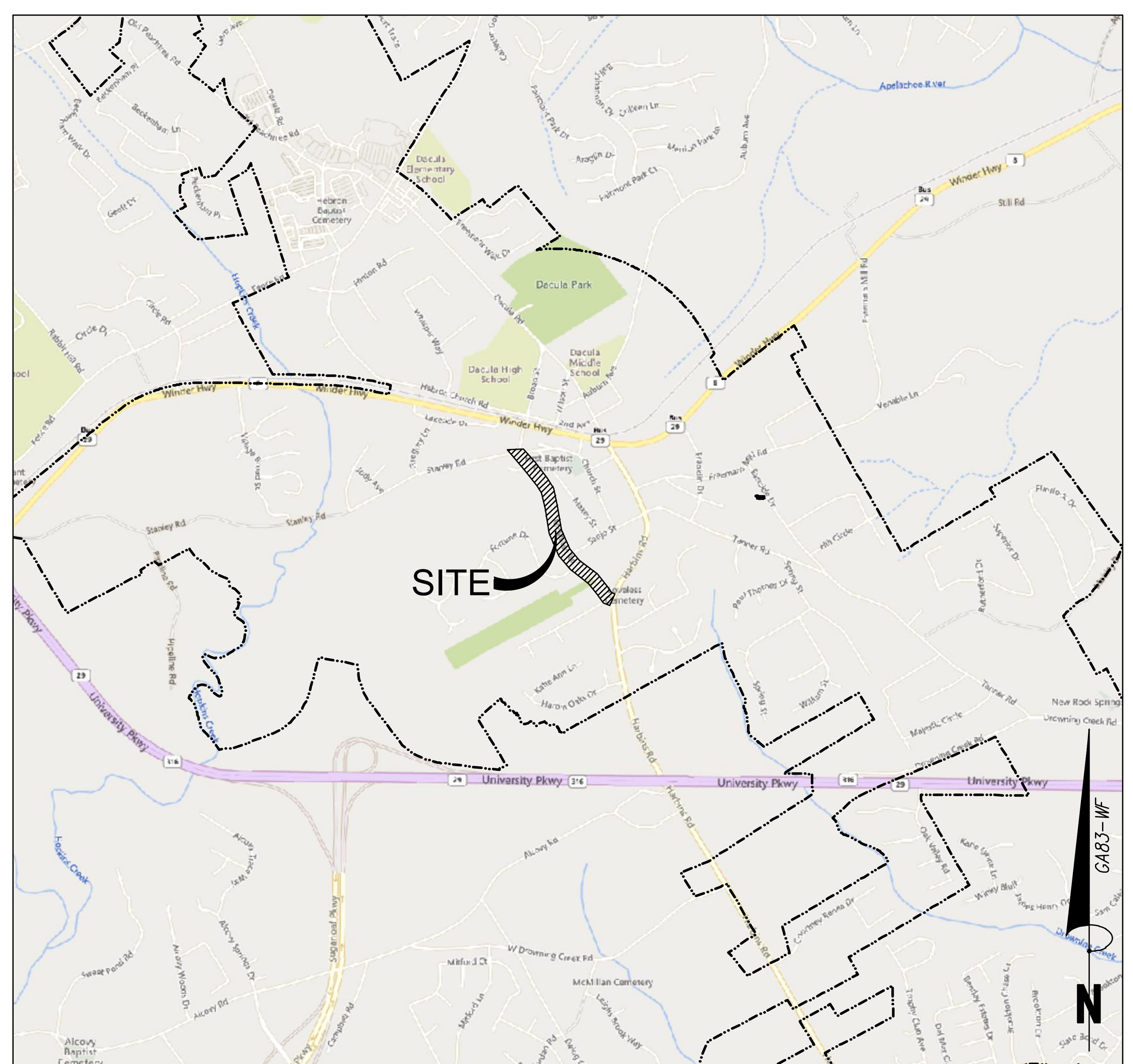

VICINITY MAP
SCALE : 1" = 2000'

GEORGIA811
www.Georgia811.com

FLOOD PLAN NOTE:

PART OF THIS PROJECT DOES NOT LAY WITHIN A SPECIAL FLOOD HAZARD AREA (SFHA) PER FEMA FIRM PANEL 13135C0062G DATED 4/11/2024 & 13135C0076F DATED 9/29/2006.

DRAWING INDEX

SHEET NUMBER	SHEET NAME	SUBMITTALS 1 (5/24/2024)	2	3	4
C000	COVER SHEET	X			
C100	OVERALL SITE PLAN	X			
C101	SITE PLAN	X			
C102	SITE PLAN	X			
C103	SITE PLAN	X			
C104	SITE PLAN	X			
C105	SITE PLAN	X			
C200	INTERSECTION PLAN	X			
C300	CONSTRUCTION DETAILS	X			
C301	CONSTRUCTION DETAILS	X			

Bowman
Certificate of Authorization License No. LSF001241

Bowman Consulting Group Ltd
4174 Silver Peak Parkway
Suwanee, GA 30024
Phone: (770) 932-6550
www.bowman.com

© 2021 Bowman Consulting Group Ltd

COVER SHEET
CDBG PROJECT FOR MCMILLAN ROAD
PAVING, DRAINAGE, AND SIDEWALK IMPROVEMENTS
McMILLAN ROAD
DACULA, GA 30019
CITY OF DACULA, GA
GWINNETT COUNTY

CONSULTANT PROJECT #
200295-01-002

GEORGIA REGISTERED PROFESSIONAL ENGINEER 27123 KEVIN D. WHIGHAM 5/24/24

PLAN STATUS

DATE	DESCRIPTION
5/24/2024	BID SET

DESIGN	DRAWN	CHKD
--	RWH	KDW

SCALE .
JOB No. 200295-01-002
DATE : May 31, 2024
FILE No. .
SHEET No. C000

May 31, 2024
File Path V:\200295 - McMillan Rd Project\200295-01-002 (ENG) - City of Dacula McMillan Project\Engineering\Engineering Plans\200295-01-02 C100 Site Plan.dwg
THIS DOCUMENT, TOGETHER WITH THE CONCEPTS AND DESIGNS PRESENTED HEREIN, AS AN INSTRUMENT OF SERVICE, IS INTENDED ONLY FOR THE SPECIFIC PURPOSE AND CLIENT FOR WHICH IT WAS PREPARED. REUSE OF AND IMPROPER RELIANCE ON THIS DOCUMENT WITHOUT WRITTEN AUTHORIZATION AND ADAPTATION BY BOWMAN CONSULTING SHALL BE WITHOUT LIABILITY TO BOWMAN CONSULTING.

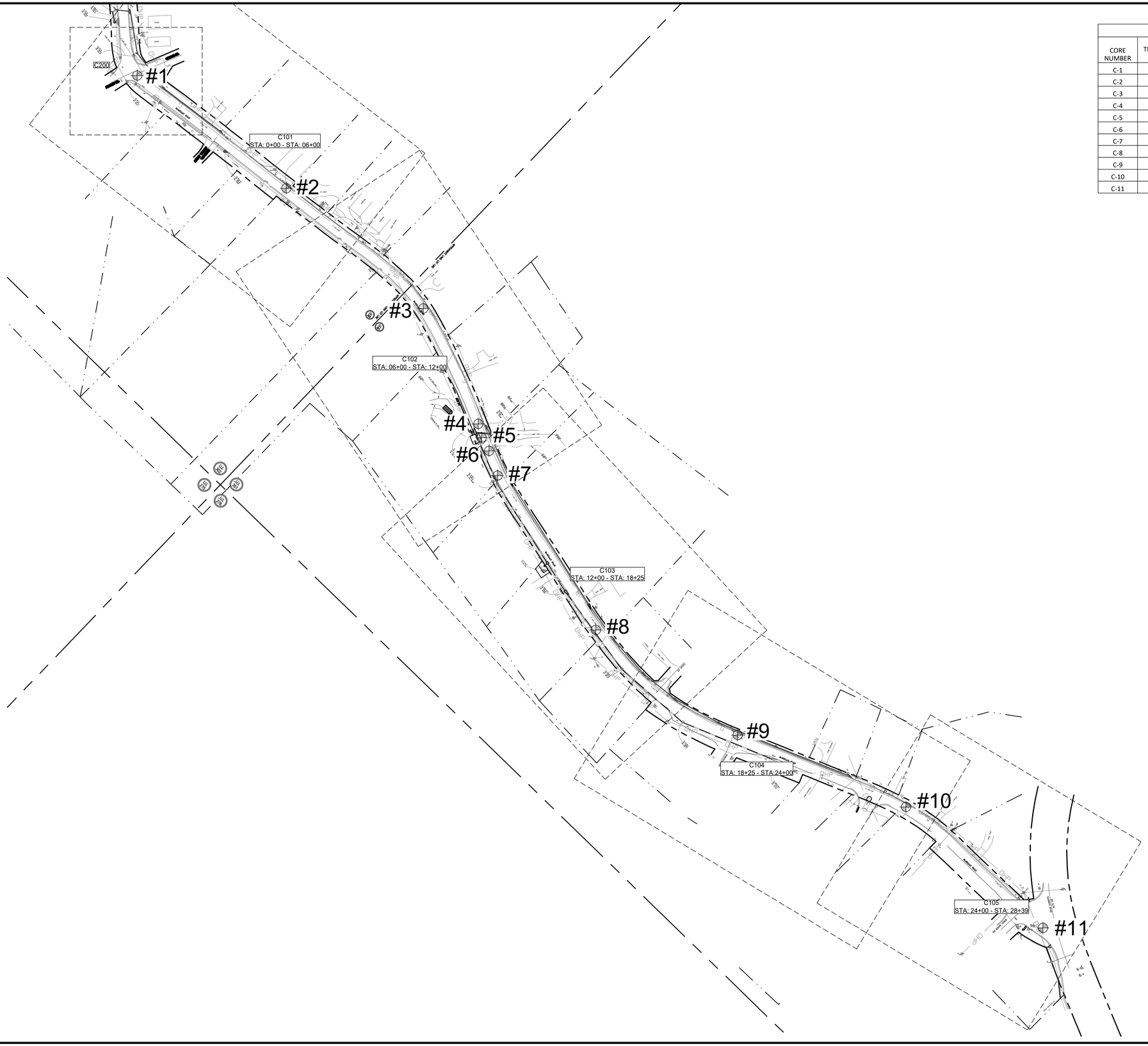

CORE TABLE			
CORE NUMBER	GAB THICKNESS (IN.)	ASPHALT TOPPING THICKNESS (IN.)	ASPHALT BINDER THICKNESS (IN.)
C-1	5	1.5	3
C-2	8	1.5	2
C-3	11	1.5	2
C-4	14	1.5	2
C-5	11	1.5	3
C-6	8.5	1.5	3
C-7	10	2	2.25
C-8	6.5	1.5	2.25
C-9	10	1.25	2
C-10	11.5	1.25	1.875
C-11	5	1.625	2.625

GEORGIA811
www.Georgia811.com

0 100' 200'
GRAPHIC SCALE
1"=100'

Bowman
Certificate of Authorization License No. LSF001241

Bowman Consulting Group Ltd
4174 Silver Peak Parkway
Suwanee, GA 30024
Phone: (770) 932-6550
www.bowman.com
© 2021 Bowman Consulting Group Ltd

OVERALL SITE PLAN
CDBG PROJECT FOR MCMILLAN ROAD
PAVING, DRAINAGE, AND SIDEWALK IMPROVEMENTS
McMILLAN ROAD
DACULA, GA 30019
CITY OF DACULA, GA
GWINNETT COUNTY

CONSULTANT PROJECT #
200295-01-002

GEORGIA REGISTERED PROFESSIONAL ENGINEER 27423 KEVIN D. WHIGHAM
5/24/24

PLAN STATUS	
5/24/2024	BID SET

DATE	DESCRIPTION	
--	RWH	KDW
DESIGN	DRAWN	CHKD

SCALE .
JOB No. 200295-01-002
DATE : May 31, 2024
FILE No. .
SHEET No. C100

May 31, 2024
File Path V:\200295 - McMillan Rd Project\200295-01-002 (ENG) - City of Dacula McMillan Project\Engineering\Engineering Plans\200295-01-02 C100 Site Plan.dwg

THIS DOCUMENT TOGETHER WITH THE CONCEPTS AND DESIGNS PRESENTED HEREIN, AS AN INSTRUMENT OF SERVICE, IS INTENDED ONLY FOR THE SPECIFIC PURPOSE AND CLIENT FOR WHICH IT WAS PREPARED. REUSE OF AND IMPROPER RELIANCE ON THIS DOCUMENT WITHOUT WRITTEN AUTHORIZATION AND ADAPTATION BY BOWMAN CONSULTING SHALL BE WITHOUT LIABILITY TO BOWMAN CONSULTING.

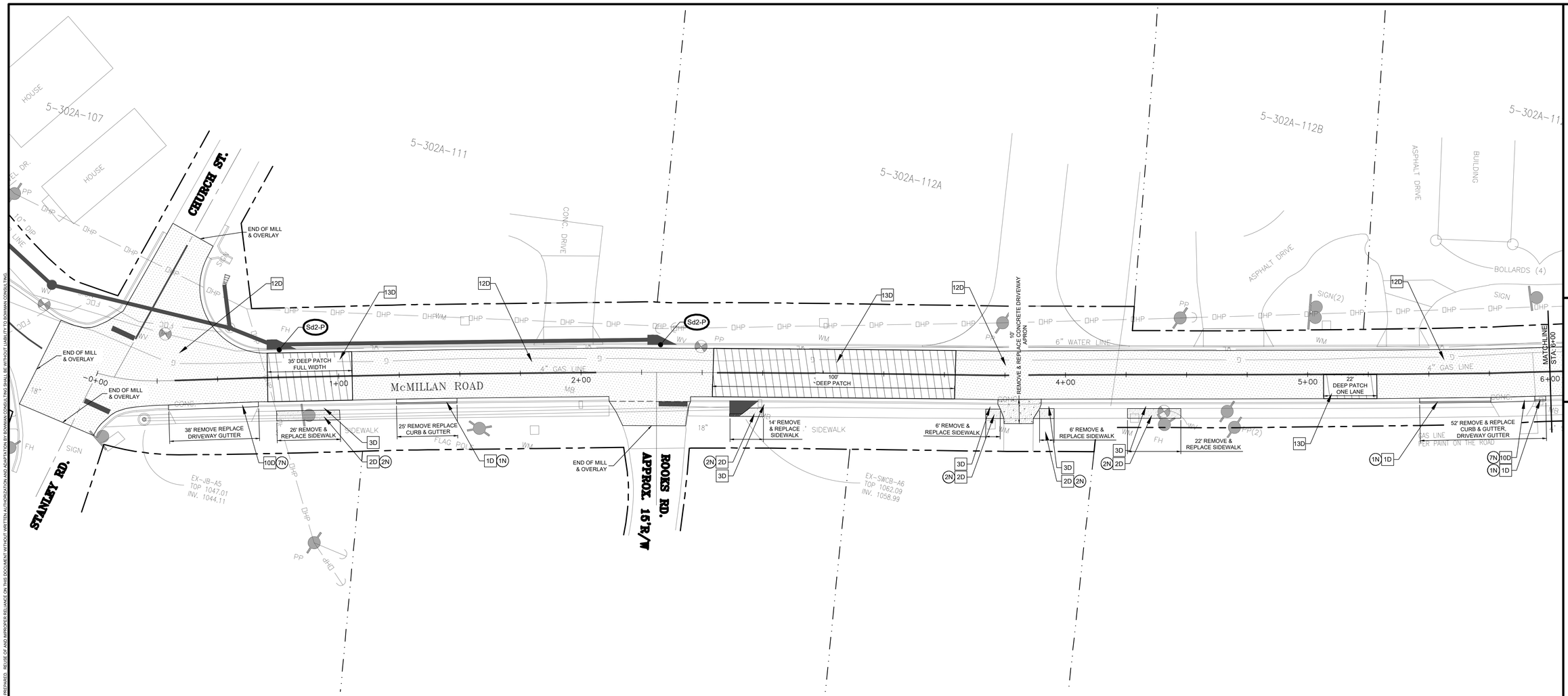

NOTES

1N DEMOLISH & REMOVE EXISTING CONCRETE CURB & GUTTER TO EARTH SUBGRADE.
2N DEMOLISH & REMOVE EXISTING CONCRETE SIDEWALK TO EARTH SUBGRADE.
3N DEMOLISH & REMOVE EXISTING CONCRETE ISLAND TO EARTH SUBGRADE.
4N SAW-CUT AT LIMITS OF DEMOLITION.
5N REMOVE AND REPLACE EXISTING HANDRAIL.
6N ADJUST JUNCTION BOX LID AND FRAME TO PROPOSED SIDEWALK ELEVATION.
7N DEMOLISH & REMOVE EXISTING DRIVEWAY GUTTER.
8N DEMOLISH & REMOVE EXISTING DRIVEWAY APRON.

DETAILS

1D PROPOSED 24" CONCRETE CURB & GUTTER.
2D PROPOSED CONCRETE SIDEWALK.
3D PROPOSED GRASS STRIP ADJACENT TO BACK OF CURB.
4D PROPOSED HANDRAIL TO MATCH AND TIE TO EXISTING HANDRAIL.
5D PROPOSED CROSSWALK.
6D PROPOSED 24" STOP BAR.
7D PROPOSED DOUBLE 4" SOLID YELLOW TRAFFIC STRIPING.
8D PROPOSED YELLOW TRAFFIC HATCHING PER MUTCD.
9D PROPOSED 4" SKIP YELLOW TRAFFIC STRIPING.
10D PROPOSED DRIVEWAY GUTTER.
11D PROPOSED CONCRETE DRIVEWAY APRON.
12D PROPOSED MILL & OVERLAY ASPHALT PAVEMENT.
13D PROPOSED DEEP MILL & PATCH ASPHALT PAVEMENT.

LEGEND

PROPERTY LINE / RIGHT OF WAY

2" MILL & OVERLAY ASPHALT PAVEMENT, SEE DETAIL.

DEEP PATCH MILL AND OVERLAY, SEE DETAIL.

EXISTING ASPHALT TO HAVE ROUTED CRACK SEAL AND SEALCOAT OVERLAY

REMOVE & REPLACE EXISTING CONCRETE SIDEWALK, COMPACT BASE, SEE DETAIL SHEET C100

REMOVE & REPLACE EXISTING CONCRETE CURB & GUTTER SEE DETAIL

DETAIL CHART

DETAIL DESCRIPTION	DETAIL # / SHEET
24" CONCRETE CURB & GUTTER DETAIL	1 / C300
CONCRETE SIDEWALK DETAIL	2 / C300
TRAFFIC MARKINGS	3 / C300
PAVEMENT DETAILS	4 / C300
PIPE BEDDING	5 / C300
PAVEMENT PATCH FOR OPEN CUT	6 / C300
TEMPORARY SEDIMENT TRAP (Sd2-P, PIG-IN-BLANKET)	7 / C300
SINGLE WING CATCH BASIN DETAIL	1 / C301
DOUBLE WING CATCH BASIN DETAIL	2 / C301
JUNCTION BOX DETAIL	3 / C301
DROP INLET DETAIL	4 / C301
CONCRETE DRIVEWAY DETAIL	1 / C302
STREET SIGN DETAIL	2 / C302

0 20' 40'
GRAPHIC SCALE
1"=20'

GEORGIA811
www.Georgia811.com

Bowman
Certificate of Authorization License No. LSF001241

Bowman Consulting Group Ltd
4174 Silver Peak Parkway
Suwanee, GA 30024
Phone: (770) 932-6550
www.bowman.com
© 2021 Bowman Consulting Group Ltd

SITE PLAN
CDBG PROJECT FOR MCMILLAN ROAD
PAVING, DRAINAGE, AND SIDEWALK IMPROVEMENTS
McMILLAN ROAD
DACULA, GA 30019
CITY OF DACULA, GA
GWINNETT COUNTY

CONSULTANT PROJECT #
200295-01-002

GEORGIA REGISTERED PROFESSIONAL ENGINEER 27133 KEVIN D. WHIGHAM 5/31/24

PLAN STATUS	
5/24/2024	BID SET

DATE	DESCRIPTION	
--	RWH	KDW
DESIGN	DRAWN	CHKD

SCALE .
JOB No. 200295-01-002
DATE : May 31, 2024
FILE No. .
SHEET No. C101

May 31, 2024
File Path:V:\200295 - McMillan Rd Project\200295-01-002 (ENG) - City of Dacula McMillan Project\Engineering\Engineering Plans\200295-01-02 C100 Site Plan.dwg
THIS DOCUMENT, TOGETHER WITH THE CONCEPTS AND DESIGNS PRESENTED HEREIN, IS AN INSTRUMENT OF SERVICE, IS INTENDED ONLY FOR THE SPECIFIC PURPOSE AND CLIENT FOR WHICH IT WAS PREPARED. REUSE OF AND IMPROPER RELIANCE ON THIS DOCUMENT WITHOUT WRITTEN AUTHORIZATION AND ADAPTATION BY BOWMAN CONSULTING SHALL BE WITHOUT LIABILITY TO BOWMAN CONSULTING.

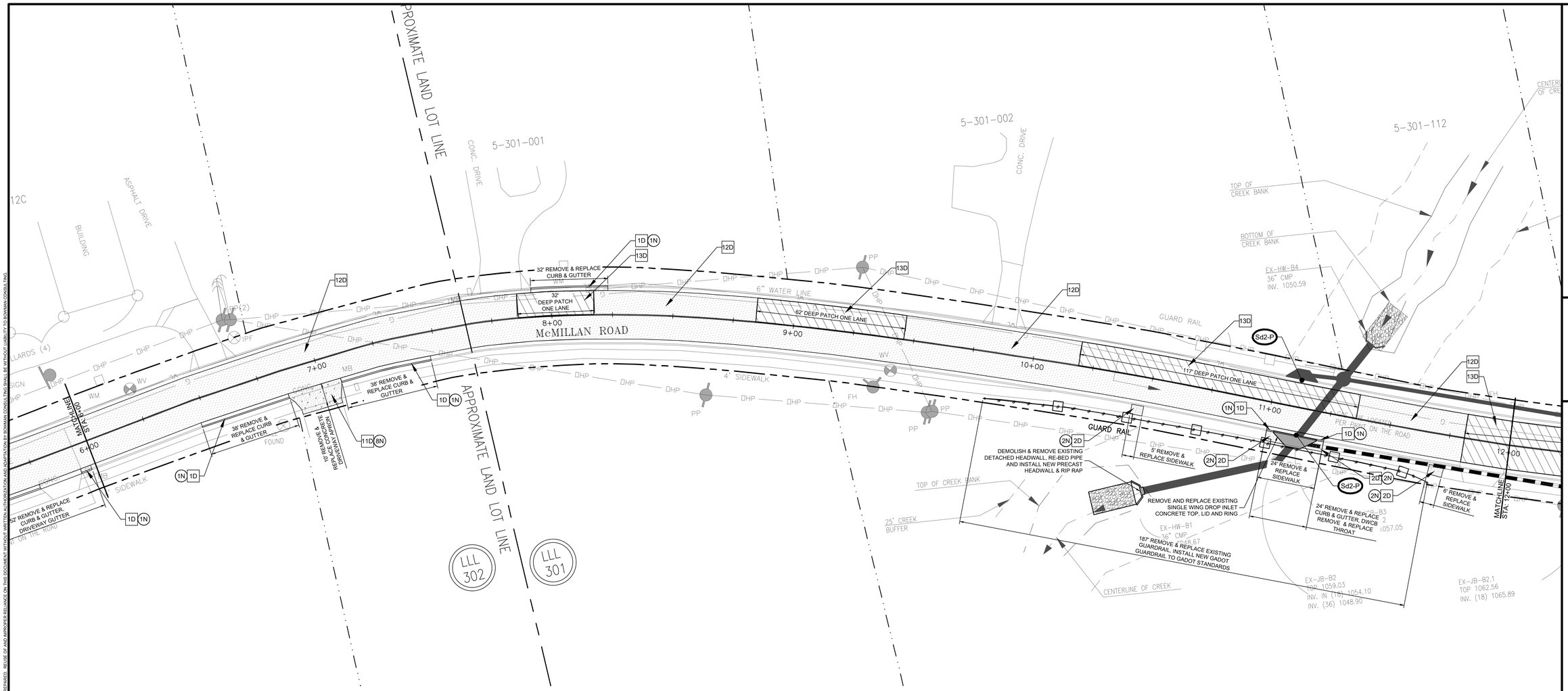

NOTES

1N DEMOLISH & REMOVE EXISTING CONCRETE CURB & GUTTER TO EARTH SUBGRADE.
2N DEMOLISH & REMOVE EXISTING CONCRETE SIDEWALK TO EARTH SUBGRADE.
3N DEMOLISH & REMOVE EXISTING CONCRETE ISLAND TO EARTH SUBGRADE.
4N SAW-CUT AT LIMITS OF DEMOLITION.
5N REMOVE AND REPLACE EXISTING HANDRAIL.
6N ADJUST JUNCTION BOX LID AND FRAME TO PROPOSED SIDEWALK ELEVATION.
7N DEMOLISH & REMOVE EXISTING DRIVEWAY GUTTER.
8N DEMOLISH & REMOVE EXISTING DRIVEWAY APRON.

DETAILS

1D PROPOSED 24" CONCRETE CURB & GUTTER.
2D PROPOSED CONCRETE SIDEWALK.
3D PROPOSED GRASS STRIP ADJACENT TO BACK OF CURB.
4D PROPOSED HANDRAIL TO MATCH AND TIE TO EXISTING HANDRAIL.
5D PROPOSED CROSSWALK.
6D PROPOSED 24" STOP BAR.
7D PROPOSED DOUBLE 4" SOLID YELLOW TRAFFIC STRIPING.
8D PROPOSED YELLOW TRAFFIC HATCHING PER MUTCD.
9D PROPOSED 4" SKIP YELLOW TRAFFIC STRIPING.
10D PROPOSED DRIVEWAY GUTTER.
11D PROPOSED CONCRETE DRIVEWAY APRON.
12D PROPOSED MILL & OVERLAY ASPHALT PAVEMENT.
13D PROPOSED DEEP MILL & PATCH ASPHALT PAVEMENT.

LEGEND

PROPERTY LINE / RIGHT OF WAY

2" MILL & OVERLAY ASPHALT PAVEMENT, SEE DETAIL.

DEEP PATCH MILL AND OVERLAY, SEE DETAIL.

EXISTING ASPHALT TO HAVE ROUTED CRACK SEAL AND SEALCOAT OVERLAY

REMOVE & REPLACE EXISTING CONCRETE SIDEWALK, COMPACT BASE, SEE DETAIL SHEET C100

REMOVE & REPLACE EXISTING CONCRETE CURB & GUTTER SEE DETAIL

DETAIL CHART

DETAIL DESCRIPTION	DETAIL # / SHEET
24" CONCRETE CURB & GUTTER DETAIL	1 / C300
CONCRETE SIDEWALK DETAIL	2 / C300
TRAFFIC MARKINGS	3 / C300
PAVEMENT DETAILS	4 / C300
PIPE BEDDING	5 / C300
PAVEMENT PATCH FOR OPEN CUT	6 / C300
TEMPORARY SEDIMENT TRAP (Sd2-P, PIG-IN-BLANKET)	7 / C300
SINGLE WING CATCH BASIN DETAIL	1 / C301
DOUBLE WING CATCH BASIN DETAIL	2 / C301
JUNCTION BOX DETAIL	3 / C301
DROP INLET DETAIL	4 / C301
CONCRETE DRIVEWAY DETAIL	1 / C302
STREET SIGN DETAIL	2 / C302

0 20' 40'
GRAPHIC SCALE
1"=20'

GEORGIA811
www.Georgia811.com

Bowman
Certificate of Authorization License No. LSF001241

Bowman Consulting Group Ltd
4174 Silver Peak Parkway
Suwanee, GA 30024
Phone: (770) 932-6550
www.bowman.com
© 2021 Bowman Consulting Group Ltd.

SITE PLAN
CDBG PROJECT FOR MCMILLAN ROAD PAVING, DRAINAGE, AND SIDEWALK IMPROVEMENTS
McMILLAN ROAD
DACULA, GA 30019
CITY OF DACULA, GA
GWINNETT COUNTY

CONSULTANT PROJECT #
200295-01-002

GEORGIA REGISTERED PROFESSIONAL ENGINEER 27193 KEVIN D. WHIGHAM
5/31/24

PLAN STATUS

5/24/2024	BID SET

DATE	DESCRIPTION	
--	RWH	KDW
DESIGN	DRAWN	CHKD

SCALE .
JOB No. 200295-01-002
DATE : May 31, 2024
FILE No. .
SHEET No. C102

May 31, 2024
File Path:V:\200295 - McMillan Rd Project\200295-01-002 (ENG) - City of Dacula McMillan Project\Engineering\Engineering Plans\200295-01-02 C100 Site Plan.dwg
THIS DOCUMENT TOGETHER WITH THE CONCEPTS AND DESIGNS PRESENTED HEREIN, AS AN INSTRUMENT OF SERVICE, IS INTENDED ONLY FOR THE SPECIFIC PURPOSE AND CLIENT FOR WHICH IT WAS PREPARED. REUSE OF AND IMPROPER RELIANCE ON THIS DOCUMENT WITHOUT WRITTEN AUTHORIZATION AND ADAPTATION BY BOWMAN CONSULTING SHALL BE WITHOUT LIABILITY TO BOWMAN CONSULTING.

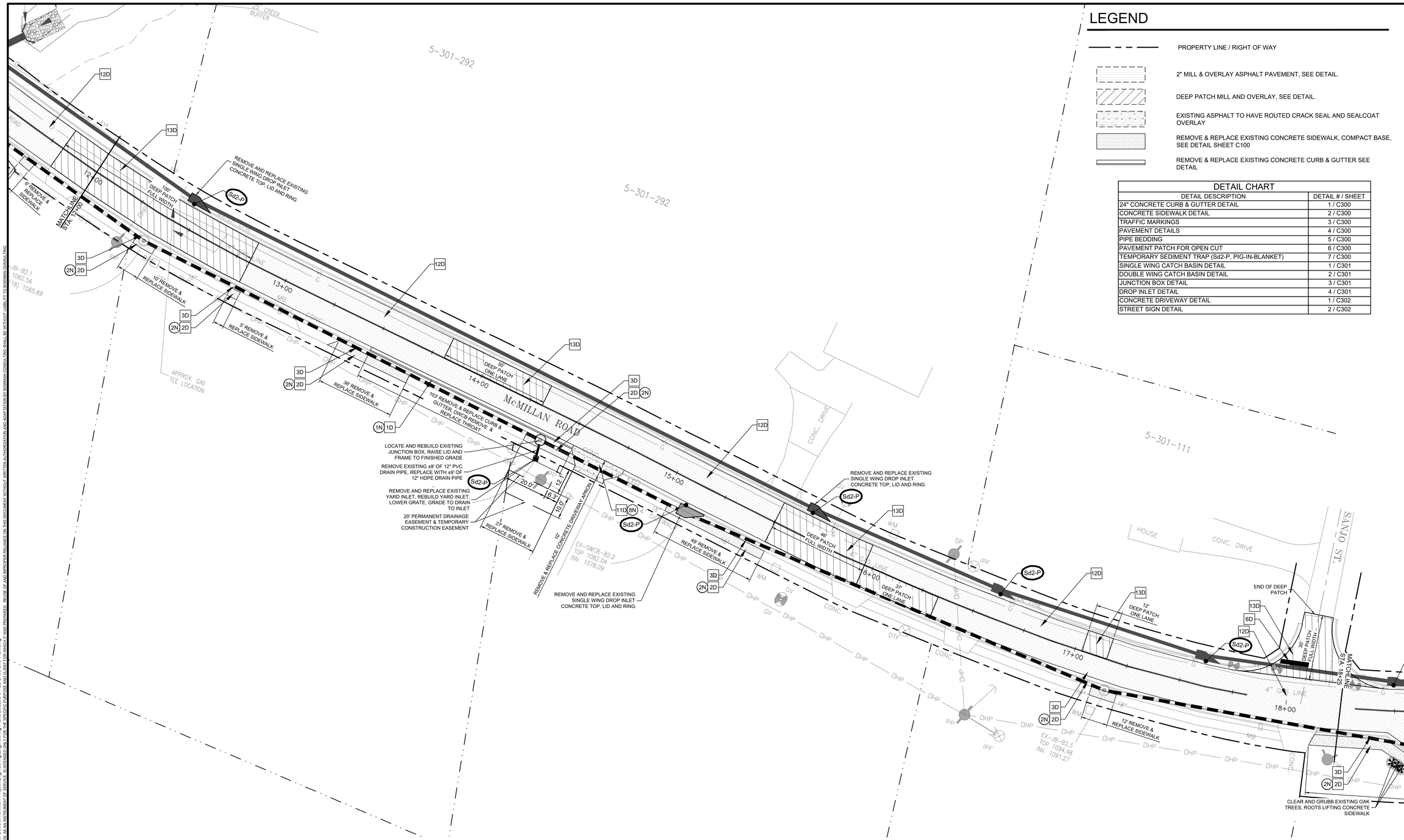

LEGEND

- PROPERTY LINE / RIGHT OF WAY
- 2" MILL & OVERLAY ASPHALT PAVEMENT, SEE DETAIL.
- DEEP PATCH MILL AND OVERLAY, SEE DETAIL.
- EXISTING ASPHALT TO HAVE ROUTED CRACK SEAL AND SEALCOAT OVERLAY
- REMOVE & REPLACE EXISTING CONCRETE SIDEWALK, COMPACT BASE, SEE DETAIL SHEET C100
- REMOVE & REPLACE EXISTING CONCRETE CURB & GUTTER SEE DETAIL

DETAIL CHART

DETAIL DESCRIPTION	DETAIL # / SHEET
24" CONCRETE CURB & GUTTER DETAIL	1 / C300
CONCRETE SIDEWALK DETAIL	2 / C300
TRAFFIC MARKINGS	3 / C300
PAVEMENT DETAILS	4 / C300
PIPE BEDDING	5 / C300
PAVEMENT PATCH FOR OPEN CUT	6 / C300
TEMPORARY SEDIMENT TRAP (Sd2-P, PIG-IN-BLANKET)	7 / C300
SINGLE WING CATCH BASIN DETAIL	1 / C301
DOUBLE WING CATCH BASIN DETAIL	2 / C301
JUNCTION BOX DETAIL	3 / C301
DROP INLET DETAIL	4 / C301
CONCRETE DRIVEWAY DETAIL	1 / C302
STREET SIGN DETAIL	2 / C302

NOTES

1N DEMOLISH & REMOVE EXISTING CONCRETE CURB & GUTTER TO EARTH SUBGRADE.
2N DEMOLISH & REMOVE EXISTING CONCRETE SIDEWALK TO EARTH SUBGRADE.
3N DEMOLISH & REMOVE EXISTING CONCRETE ISLAND TO EARTH SUBGRADE.
4N SAW-CUT AT LIMITS OF DEMOLITION.
5N REMOVE AND REPLACE EXISTING HANDRAIL.
6N ADJUST JUNCTION BOX LID AND FRAME TO PROPOSED SIDEWALK ELEVATION.
7N DEMOLISH & REMOVE EXISTING DRIVEWAY GUTTER.
8N DEMOLISH & REMOVE EXISTING DRIVEWAY APRON.

DETAILS

1D PROPOSED 24" CONCRETE CURB & GUTTER.
2D PROPOSED CONCRETE SIDEWALK.
3D PROPOSED GRASS STRIP ADJACENT TO BACK OF CURB.
4D PROPOSED HANDRAIL TO MATCH AND TIE TO EXISTING HANDRAIL.
5D PROPOSED CROSSWALK.
6D PROPOSED 24" STOP BAR.
7D PROPOSED DOUBLE 4" SOLID YELLOW TRAFFIC STRIPING.
8D PROPOSED YELLOW TRAFFIC HATCHING PER MUTCD.
9D PROPOSED 4" SKIP YELLOW TRAFFIC STRIPING.
10D PROPOSED DRIVEWAY GUTTER.
11D PROPOSED CONCRETE DRIVEWAY APRON.
12D PROPOSED MILL & OVERLAY ASPHALT PAVEMENT.
13D PROPOSED DEEP MILL & PATCH ASPHALT PAVEMENT.

GEORGIA811 www.Georgia811.com

Bowman
Certificate of Authorization License No. LSF001241

Bowman Consulting Group Ltd
4174 Silver Peak Parkway
Suwanee, GA 30024
Phone: (770) 932-6550
www.bowman.com

© 2021 Bowman Consulting Group Ltd.

SITE PLAN
CDBG PROJECT FOR MCMILLAN ROAD
PAVING, DRAINAGE, AND SIDEWALK IMPROVEMENTS
McMILLAN ROAD
DACULA, GA 30019
CITY OF DACULA, GA
GWINNETT COUNTY

CONSULTANT PROJECT # 200295-01-002

GEORGIA REGISTERED PROFESSIONAL ENGINEER KEVIN D. WHIGHAM 5/24/24

PLAN STATUS	
5/24/2024	BID SET

DATE	DESCRIPTION	
--	RWH	KDW
DESIGN	DRAWN	CHKD

SCALE	.
JOB No.	200295-01-002
DATE :	May 31, 2024
FILE No.	.
SHEET No.	C103

May 31, 2024
File Path:V:\200295_McMillan Rd Project\200295-01-002 (ENG) - City of Dacula McMillan Project\Engineering\Engineering Plans\200295-01-02 C100 Site Plan.dwg
THIS DOCUMENT TOGETHER WITH THE CONCEPTS AND DESIGNS PRESENTED HEREIN, AS AN INSTRUMENT OF SERVICE, IS INTENDED ONLY FOR THE SPECIFIC PURPOSE AND CLIENT FOR WHICH IT WAS PREPARED. REUSE OF AND IMPROPER RELIANCE ON THIS DOCUMENT WITHOUT WRITTEN AUTHORIZATION AND ADAPTATION BY BOWMAN CONSULTING SHALL BE WITHOUT LIABILITY TO BOWMAN CONSULTING.

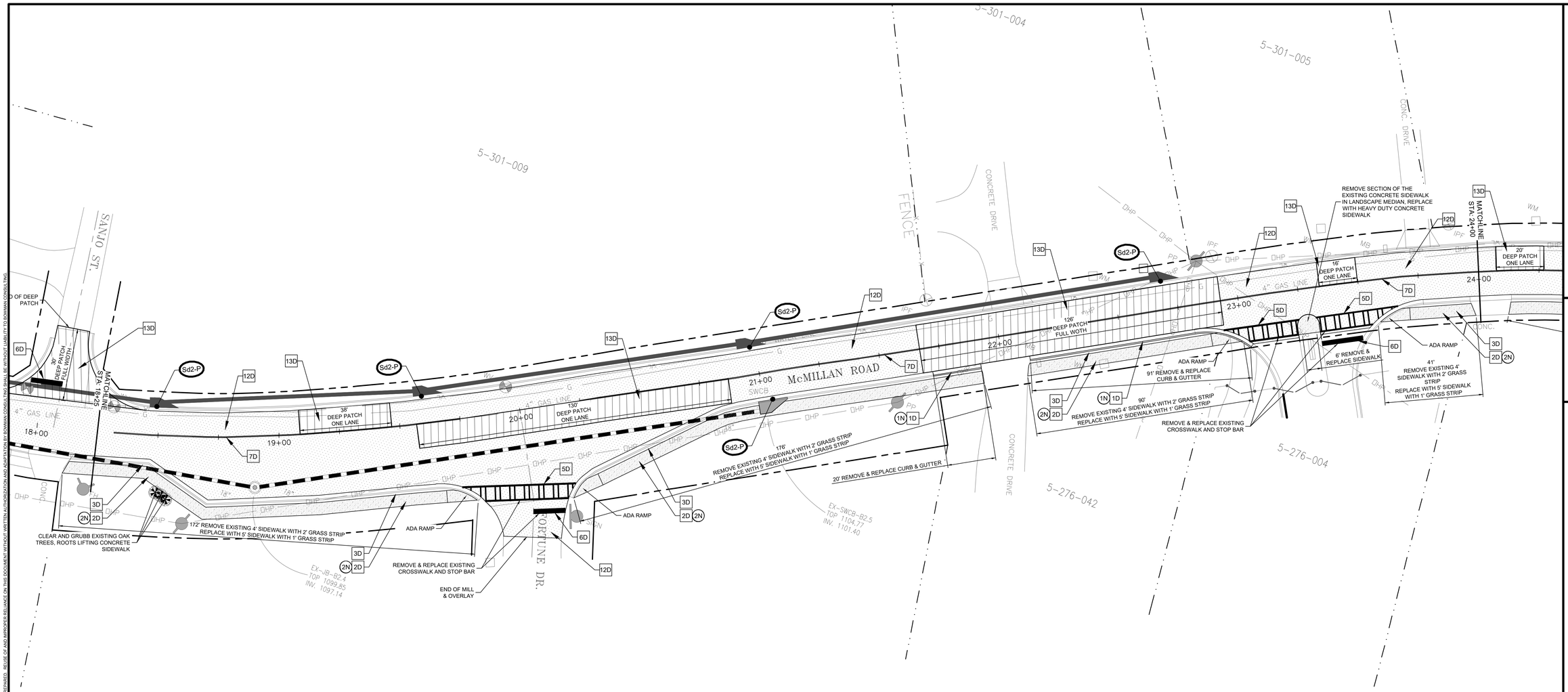

LEGEND

PROPERTY LINE / RIGHT OF WAY

2" MILL & OVERLAY ASPHALT PAVEMENT, SEE DETAIL.

DEEP PATCH MILL AND OVERLAY, SEE DETAIL.

EXISTING ASPHALT TO HAVE ROUTED CRACK SEAL AND SEALCOAT OVERLAY

REMOVE & REPLACE EXISTING CONCRETE SIDEWALK, COMPACT BASE, SEE DETAIL SHEET C100

REMOVE & REPLACE EXISTING CONCRETE CURB & GUTTER SEE DETAIL

NOTES

1N DEMOLISH & REMOVE EXISTING CONCRETE CURB & GUTTER TO EARTH SUBGRADE.
2N DEMOLISH & REMOVE EXISTING CONCRETE SIDEWALK TO EARTH SUBGRADE.
3N DEMOLISH & REMOVE EXISTING CONCRETE ISLAND TO EARTH SUBGRADE.
4N SAW-CUT AT LIMITS OF DEMOLITION.
5N REMOVE AND REPLACE EXISTING HANDRAIL.
6N ADJUST JUNCTION BOX LID AND FRAME TO PROPOSED SIDEWALK ELEVATION.
7N DEMOLISH & REMOVE EXISTING DRIVEWAY GUTTER.
8N DEMOLISH & REMOVE EXISTING DRIVEWAY APRON.

DETAILS

1D PROPOSED 24" CONCRETE CURB & GUTTER.
2D PROPOSED CONCRETE SIDEWALK.
3D PROPOSED GRASS STRIP ADJACENT TO BACK OF CURB.
4D PROPOSED HANDRAIL TO MATCH AND TIE TO EXISTING HANDRAIL.
5D PROPOSED CROSSWALK.
6D PROPOSED 24" STOP BAR.
7D PROPOSED DOUBLE 4" SOLID YELLOW TRAFFIC STRIPING.
8D PROPOSED YELLOW TRAFFIC HATCHING PER MUTCD.
9D PROPOSED 4" SKIP YELLOW TRAFFIC STRIPING.
10D PROPOSED DRIVEWAY GUTTER.
11D PROPOSED CONCRETE DRIVEWAY APRON.
12D PROPOSED MILL & OVERLAY ASPHALT PAVEMENT.
13D PROPOSED DEEP MILL & PATCH ASPHALT PAVEMENT.

DETAIL CHART

DETAIL DESCRIPTION	DETAIL # / SHEET
24" CONCRETE CURB & GUTTER DETAIL	1 / C300
CONCRETE SIDEWALK DETAIL	2 / C300
TRAFFIC MARKINGS	3 / C300
PAVEMENT DETAILS	4 / C300
PIPE BEDDING	5 / C300
PAVEMENT PATCH FOR OPEN CUT	6 / C300
TEMPORARY SEDIMENT TRAP (Sd2-P, PIG-IN-BLANKET)	7 / C300
SINGLE WING CATCH BASIN DETAIL	1 / C301
DOUBLE WING CATCH BASIN DETAIL	2 / C301
JUNCTION BOX DETAIL	3 / C301
DROP INLET DETAIL	4 / C301
CONCRETE DRIVEWAY DETAIL	1 / C302
STREET SIGN DETAIL	2 / C302

0 20' 40'
GRAPHIC SCALE
1"=20'

GEORGIA811
www.Georgia811.com

Bowman
Certificate of Authorization License No. LSF001241

Bowman Consulting Group Ltd
4174 Silver Peak Parkway
Suwanee, GA 30024
Phone: (770) 932-6550
www.bowman.com
© 2021 Bowman Consulting Group Ltd

SITE PLAN
CDBG PROJECT FOR MCMILLAN ROAD
PAVING, DRAINAGE, AND SIDEWALK IMPROVEMENTS
McMILLAN ROAD
DACULA, GA 30019
CITY OF DACULA, GA
GWINNETT COUNTY

CONSULTANT PROJECT #
200295-01-002

GEORGIA REGISTERED PROFESSIONAL ENGINEER 27133 KEVIN D. WHIGHAM 5/31/24

PLAN STATUS	
5/24/2024	BID SET

DATE	DESCRIPTION	
--	RWH	KDW
DESIGN	DRAWN	CHKD

SCALE .
JOB No. 200295-01-002
DATE : May 31, 2024
FILE No. .
SHEET No. C104

May 31, 2024
File Path:V:\200295 - McMillan Rd Project\200295-01-002 (ENG) - City of Dacula McMillan Project\Engineering\Engineering Plans\200295-01-02 C100 Site Plan.dwg
THIS DOCUMENT, TOGETHER WITH THE CONCEPTS AND DESIGNS PRESENTED HEREIN, AS AN INSTRUMENT OF SERVICE, IS INTENDED ONLY FOR THE SPECIFIC PURPOSE AND CLIENT FOR WHICH IT WAS PREPARED. REUSE OF AND IMPROPER RELIANCE ON THIS DOCUMENT WITHOUT WRITTEN AUTHORIZATION AND ADAPTATION BY BOWMAN CONSULTING SHALL BE WITHOUT LIABILITY TO BOWMAN CONSULTING.

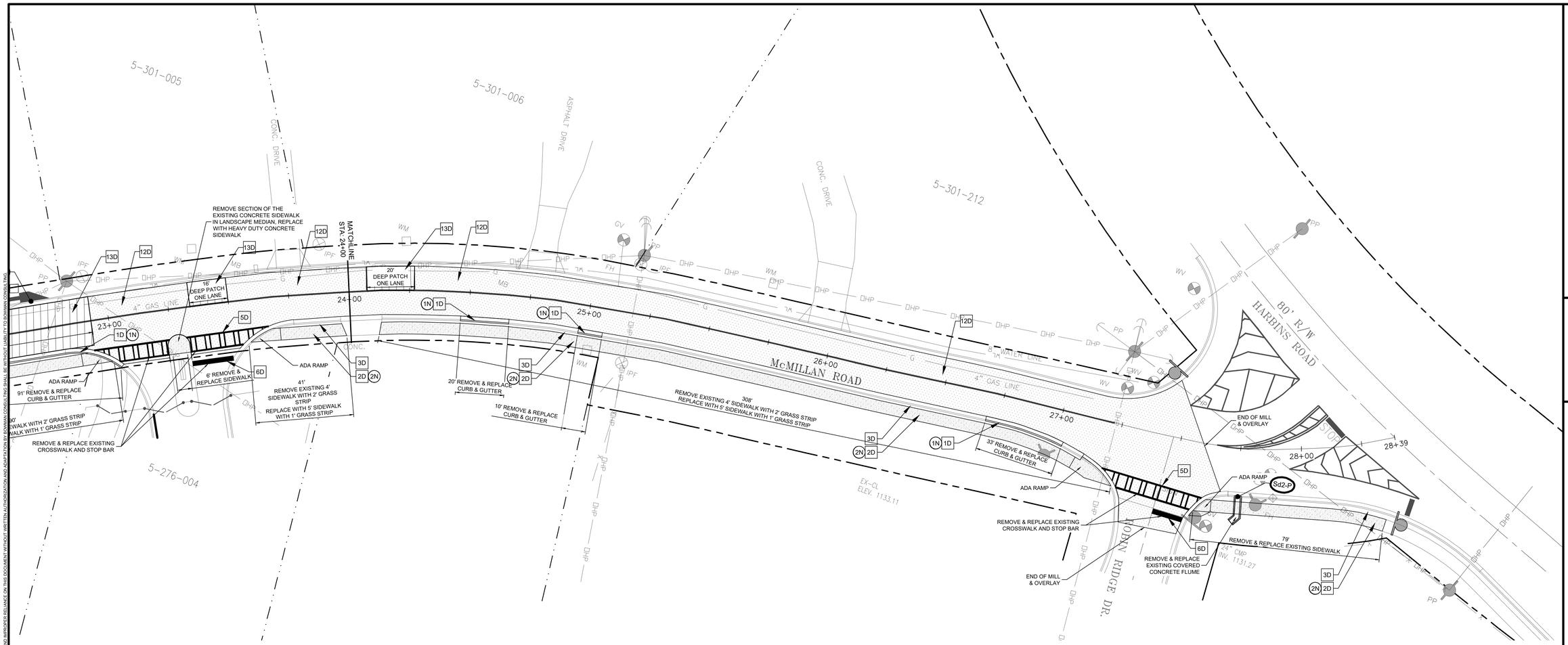

LEGEND

- PROPERTY LINE / RIGHT OF WAY
- 2" MILL & OVERLAY ASPHALT PAVEMENT, SEE DETAIL.
- DEEP PATCH MILL AND OVERLAY, SEE DETAIL.
- EXISTING ASPHALT TO HAVE ROUTED CRACK SEAL AND SEALCOAT OVERLAY
- REMOVE & REPLACE EXISTING CONCRETE SIDEWALK, COMPACT BASE, SEE DETAIL SHEET C100
- REMOVE & REPLACE EXISTING CONCRETE CURB & GUTTER SEE DETAIL

○ NOTES

1N	DEMOLISH & REMOVE EXISTING CONCRETE CURB & GUTTER TO EARTH SUBGRADE.
2N	DEMOLISH & REMOVE EXISTING CONCRETE SIDEWALK TO EARTH SUBGRADE.
3N	DEMOLISH & REMOVE EXISTING CONCRETE ISLAND TO EARTH SUBGRADE.
4N	SAW-CUT AT LIMITS OF DEMOLITION.
5N	REMOVE AND REPLACE EXISTING HANDRAIL.
6N	ADJUST JUNCTION BOX LID AND FRAME TO PROPOSED SIDEWALK ELEVATION.
7N	DEMOLISH & REMOVE EXISTING DRIVEWAY GUTTER.
8N	DEMOLISH & REMOVE EXISTING DRIVEWAY APRON.

□ DETAILS

1D	PROPOSED 24" CONCRETE CURB & GUTTER.
2D	PROPOSED CONCRETE SIDEWALK.
3D	PROPOSED GRASS STRIP ADJACENT TO BACK OF CURB.
4D	PROPOSED HANDRAIL TO MATCH AND TIE TO EXISTING HANDRAIL.
5D	PROPOSED CROSSWALK.
6D	PROPOSED 24" STOP BAR.
7D	PROPOSED DOUBLE 4" SOLID YELLOW TRAFFIC STRIPING.
8D	PROPOSED YELLOW TRAFFIC HATCHING PER MUTCD.
9D	PROPOSED 4" SKIP YELLOW TRAFFIC STRIPING.
10D	PROPOSED DRIVEWAY GUTTER.
11D	PROPOSED CONCRETE DRIVEWAY APRON.
12D	PROPOSED MILL & OVERLAY ASPHALT PAVEMENT.
13D	PROPOSED DEEP MILL & PATCH ASPHALT PAVEMENT.

DETAIL CHART

DETAIL DESCRIPTION	DETAIL # / SHEET
24" CONCRETE CURB & GUTTER DETAIL	1 / C300
CONCRETE SIDEWALK DETAIL	2 / C300
TRAFFIC MARKINGS	3 / C300
PAVEMENT DETAILS	4 / C300
PIPE BEDDING	5 / C300
PAVEMENT PATCH FOR OPEN CUT	6 / C300
TEMPORARY SEDIMENT TRAP (Sd2-P, PIG-IN-BLANKET)	7 / C300
SINGLE WING CATCH BASIN DETAIL	1 / C301
DOUBLE WING CATCH BASIN DETAIL	2 / C301
JUNCTION BOX DETAIL	3 / C301
DROP INLET DETAIL	4 / C301
CONCRETE DRIVEWAY DETAIL	1 / C302
STREET SIGN DETAIL	2 / C302

0 20' 40'
GRAPHIC SCALE
1"=20'

GEORGIA811
www.Georgia811.com

Bowman
Certificate of Authorization License No. LSF001241

Bowman Consulting Group Ltd
4174 Silver Peak Parkway
Suwanee, GA 30024
Phone: (770) 932-6550
www.bowman.com
© 2021 Bowman Consulting Group Ltd.

SITE PLAN
CDBG PROJECT FOR MCMILLAN ROAD
PAVING, DRAINAGE, AND SIDEWALK IMPROVEMENTS
McMILLAN ROAD
DACULA, GA 30019
CITY OF DACULA, GA
GWINNETT COUNTY

CONSULTANT PROJECT #
200295-01-002

GEORGIA REGISTERED PROFESSIONAL ENGINEER 27123 KEVIN D. WHIGHAM 5/31/24

PLAN STATUS	
5/24/2024	BID SET

DATE	DESCRIPTION	
--	RWH	KDW
DESIGN	DRAWN	CHKD

SCALE .
JOB No. 200295-01-002
DATE : May 31, 2024
FILE No. .
SHEET No. C105

May 31, 2024
File Path:V:\200295 - McMillan Rd Project\200295-01-002 (ENG) - City of Dacula McMillan Project\Engineering\Engineering Plans\200295-01-02 C100 Site Plan.dwg
THIS DOCUMENT, TOGETHER WITH THE CONCEPTS AND DESIGNS PRESENTED HEREIN, AS AN INSTRUMENT OF SERVICE, IS INTENDED ONLY FOR THE SPECIFIC PURPOSE AND CLIENT FOR WHICH IT WAS PREPARED. REUSE OF AND IMPROPER RELIANCE ON THIS DOCUMENT WITHOUT WRITTEN AUTHORIZATION AND ADAPTATION BY BOWMAN CONSULTING SHALL BE WITHOUT LIABILITY TO BOWMAN CONSULTING.

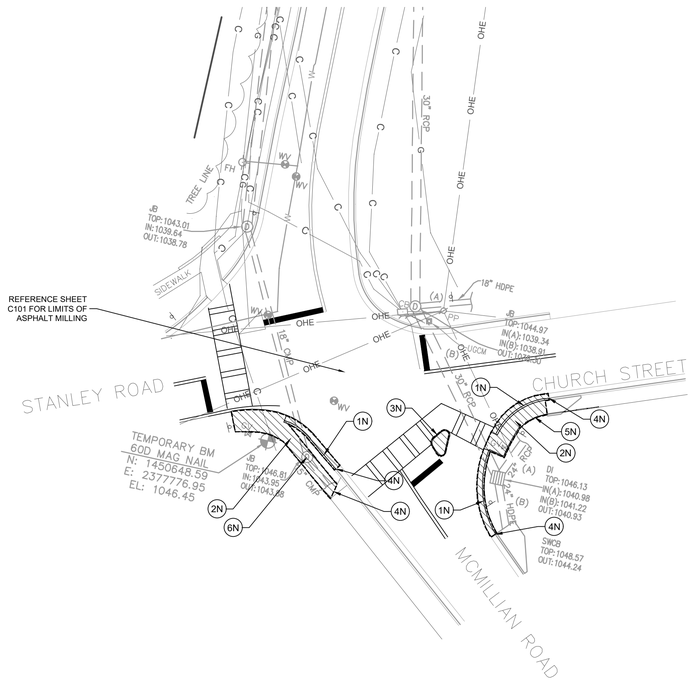

DEMOLITION PLAN

SCALE: 1" = 20'

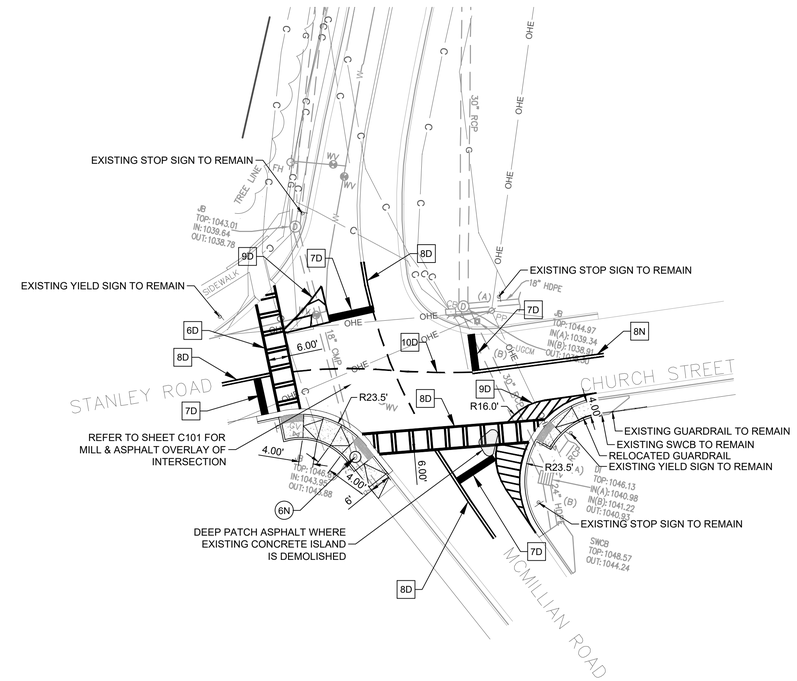

SITE PLAN

SCALE: 1" = 20'

NOTES

1N DEMOLISH & REMOVE EXISTING CONCRETE CURB & GUTTER TO EARTH SUBGRADE.
2N DEMOLISH & REMOVE EXISTING CONCRETE SIDEWALK TO EARTH SUBGRADE.
3N DEMOLISH & REMOVE EXISTING CONCRETE ISLAND TO EARTH SUBGRADE.
4N SAW-CUT AT LIMITS OF DEMOLITION.
5N REMOVE AND REPLACE EXISTING HANDRAIL.
6N ADJUST JUNCTION BOX LID AND FRAME TO PROPOSED SIDEWALK ELEVATION.

DETAILS

1D PROPOSED 24" CONCRETE CURB & GUTTER.
2D PROPOSED 6' CONCRETE SIDEWALK ADJACENT TO BACK OF CURB.
3D PROPOSED 4' CONCRETE SIDEWALK ADJACENT TO BACK OF CURB TO MATCH EXISTING SIDEWALK.
4D PROPOSED 5' CONCRETE SIDEWALK WITH 1' GRASS STRIP ADJACENT TO BACK OF CURB.
5D PROPOSED HANDRAIL TO MATCH AND TIE TO EXISTING HANDRAIL.
6D PROPOSED CROSSWALK.
7D PROPOSED 24" STOP BAR.
8D PROPOSED DOUBLE 4" SOLID YELLOW TRAFFIC STRIPING.
9D PROPOSED YELLOW TRAFFIC HATCHING PER MUTCD.
10D PROPOSED" SKIP YELLOW TRAFFIC STRIPING.

DETAIL CHART

DETAIL DESCRIPTION	DETAIL # / SHEET
24" CONCRETE CURB & GUTTER DETAIL	1 / C300
CONCRETE SIDEWALK DETAIL	2 / C300
TRAFFIC MARKINGS	3 / C300
PAVEMENT DETAILS	4 / C300
PIPE BEDDING	5 / C300
PAVEMENT PATCH FOR OPEN CUT	6 / C300
TEMPORARY SEDIMENT TRAP (Sd2-P, PIG-IN-BLANKET)	7 / C300
SINGLE WING CATCH BASIN DETAIL	1 / C301
DOUBLE WING CATCH BASIN DETAIL	2 / C301
JUNCTION BOX DETAIL	3 / C301
DROP INLET DETAIL	4 / C301
CONCRETE DRIVEWAY DETAIL	1 / C302
STREET SIGN DETAIL	2 / C302

GEORGIA811
www.Georgia811.com

0 20' 40'
GRAPHIC SCALE
1"=20'

Bowman
Certificate of Authorization License No. LSF001241

Bowman Consulting Group Ltd
4174 Silver Peak Parkway
Suwanee, GA 30024
Phone: (770) 932-6550
www.bowman.com

© 2021 Bowman Consulting Group Ltd

INTERSECTION PLAN
CDBG PROJECT FOR MCMILLAN ROAD
PAVING, DRAINAGE, AND SIDEWALK IMPROVEMENTS
McMILLAN ROAD
DACULA, GA 30019
CITY OF DACULA, GA
GWINNETT COUNTY

CONSULTANT PROJECT #
200295-01-002

GEORGIA REGISTERED PROFESSIONAL ENGINEER KEVIN D. WHIGHAM 5/24/24
LEVEL II E&S CERT.#945
EXP. DATE 09-27-24

PLAN STATUS	
5/24/2024	BID SET
DATE	DESCRIPTION

--	RWH	KDW
DESIGN	DRAWN	CHKD

SCALE .
JOB No. 200295-01-002
DATE : May 31, 2024
FILE No. .
SHEET No. C200

May 31, 2024
File Path V:\200295 - McMillan Rd Project\200295-01-002 (ENG) - City of Dacula McMillan Project\Engineering\Engineering Plans\200295-01-02 C200 Intersection Plan.dwg
THIS DOCUMENT TOGETHER WITH THE CONCEPTS AND DESIGNS PRESENTED HEREIN, AS AN INSTRUMENT OF SERVICE, IS INTENDED ONLY FOR THE SPECIFIC PURPOSE AND CLIENT FOR WHICH IT WAS PREPARED. REUSE OF AND IMPROPER RELIANCE ON THIS DOCUMENT WITHOUT WRITTEN AUTHORIZATION AND ADAPTATION BY BOWMAN CONSULTING SHALL BE WITHOUT LIABILITY TO BOWMAN CONSULTING.

NOTE:
1. MINIMUM OF 4" G.A.B. BASE UNDER CURB & GUTTER TYPICAL.
2. COMPACTED SUBGRADE A MINIMUM OF 98% MODIFIED PROCTOR.
3. CONCRETE SHALL BE 3000 PSI CLASS A.

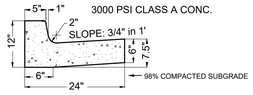

A STANDARD 6" x 12" x 24" CONCRETE CURB AND GUTTER (C&G)

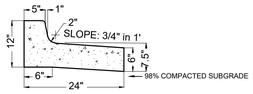

B STANDARD 6" x 12" x 24" SPILL CONCRETE CURB AND GUTTER (C&G)

C STANDARD 6" x 6" x 24" ZERO HEIGHT CONCRETE CURB AT DRIVEWAY

1 24" CONCRETE CURB & GUTTER DETAIL
NTS

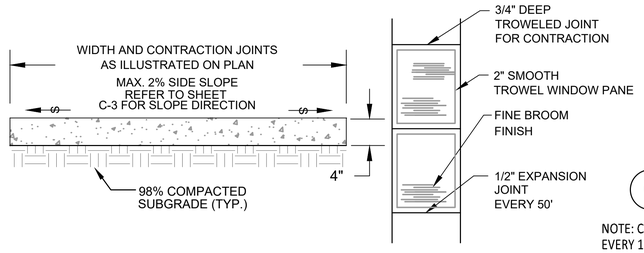

NOTES:
1. SIDEWALK TO BE CONSTRUCTED OF CLASS "A"-3000 PSI CONCRETE WITH 100% VIRGIN POLYPROPYLENE FIBRILLATED FIBERS ADDED AT THE RATE OF 1.5 LBS PER CUBIC YARD.

2 CONCRETE SIDEWALK DETAIL
NTS

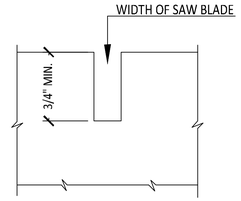

C CONTRACTION JOINT SEAL
NTS

NOTE: CONTRACTION JOINTS EVERY 10' OR AS SHOWN

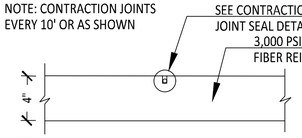

A CONTRACTION JOINT
NTS

SEAL ALL EXPANSION JOINTS TOP WITH BASF MASTERSEAL NP2 MULTI-COMPONENT HIGH PERFORMANCE POLYURETHANE SEALANT, OR APPROVED EQUAL. SUBMIT GRAY COLOR SAMPLES FOR THE OWNER'S APPROVAL .

UTILIZE "SNAP-CAP", "VOID CAP" OR, APPROVED EQUAL WITH REMOVABLE OTHER 1/2" X 1/2" CAP TO CREATE VOID SPACE FOR SEALER.

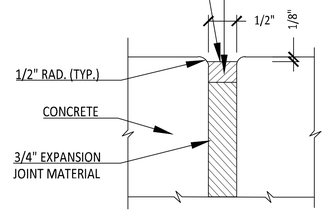

NOTE: EXPANSION JOINTS EVERY 50' MINIMUM, OR AS SHOWN

B EXPANSION JOINT
NTS

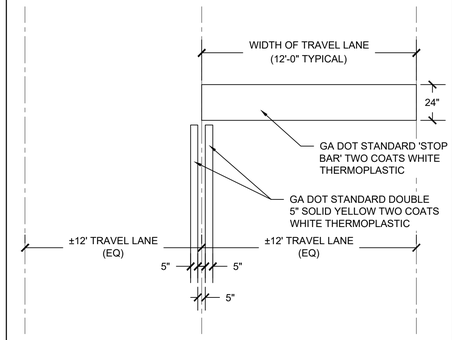

NOTES:
1. ALL TRAFFIC TO INSTALLED PER GEORGIA DOT STANDARDS.
2. REFER TO GA DOT STANDARD 'T-11A'.
3. ALL STRIPING SHALL CONFORM TO LATEST EDITION OF MANUAL ON UNIFORM TRAFFIC CONTROL DEVICES (M.U.T.C.D.) AND ANY SUPPLEMENTS THERETO.

3 TRAFFIC MARKINGS
NTS

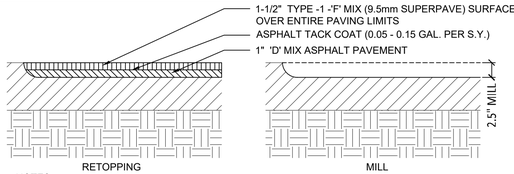

NOTES:
1. 2.5" MILL EXISTING ASPHALT.
2. INSTALL 1" 'D' MIX OVER ENTIRE PAVING LIMITS.
3. INSTALL TACK COAT.
4. INSTALL 1-1/2" 'F' MIX (9.5mm) SURFACE COURSE.
5. RE-STRIPE PAVEMENT AND PARKING MARKINGS TO MATCH EXISTING CONDITIONS.
6. REFER TO SHEET C100 FOR MILLING LIMITS AND C200 FOR PAVEMENT LIMITS.

A MILL & RE-TOPPING

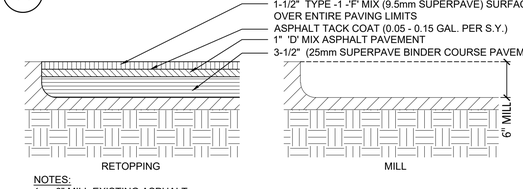

NOTES:
1. 6" MILL EXISTING ASPHALT.
2. INSTALL 3-1/2" (25mm SUPERPAVE).
3. INSTALL 1" 'D' MIX OVER ENTIRE PAVING LIMITS.
4. INSTALL TACK COAT.
5. INSTALL 1-1/2" 'F' MIX (9.5mm SUPERPAVE) SURFACE COURSE.
6. RE-STRIPE PAVEMENT AND PARKING MARKINGS TO MATCH EXISTING CONDITIONS.
7. REFER TO SHEET C100 FOR MILLING LIMITS AND C200 FOR PAVEMENT LIMITS.

B DEEP PATCH MILL & RE-TOPPING

4 PAVEMENT DETAILS
N.T.S.

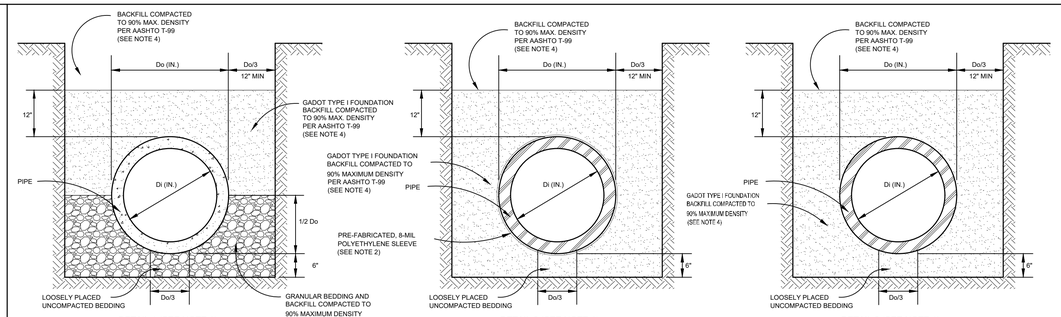

DETAIL 1 (SEE NOTE 1) DETAIL 2 (SEE NOTE 1) DETAIL 3 (SEE NOTE 1)

NOTES
1.) REPRESENTATIVE SOIL pH RESULTS SHALL BE PROVIDED FOR ALUMINIZED TYPE 2 STEEL OR REINFORCED CONCRETE PIPE WHERE THE SOIL TYPE, AS INDICATED IN THE GWINNETT COUNTY SOIL SURVEY, HAS A pH RANGE WITH pH VALUES LESS THAN 5. DETAIL 1 OR DETAIL 2 SHALL BE USED WHEN THE SOIL pH < 5. DETAIL 1 OR DETAIL 2 MAY BE USED IN LIEU OF SOIL pH TESTING FOR ALUMINIZED TYPE 2 STEEL OR REINFORCED CONCRETE PIPE. NO pH TESTING SHALL BE REQUIRED FOR HDPE, ALUMINUM PIPE, OR POLYMER PRECOAT CSP.
2.) PRE-FABRICATED, 8-MIL POLYETHYLENE SLEEVE SHALL BE SLIPPED OVER THE PIPE DURING INSTALLATION, OVERLAPPED WHERE NECESSARY, AND SECURED WITH POLYETHYLENE TAPE TO COMPLETELY PREVENT THE ENTRANCE OF SOILS.
3.) ALLOWABLE GRANULAR MATERIALS SHALL BE GRADED AGGREGATE BASE, CRUSHER RUN, GADOT FOUNDATION BACKFILL MATERIAL TYPE II, OR GADOT MECHANICALLY STABILIZED EMBANKMENT BACKFILL.
4.) BACKFILL SHALL BE COMPACTED TO 95% MAX DENSITY PER AASHTO T-99 WITHIN STREET RIGHT-OF-WAY.

PIPE TYPE	BEDDING DETAIL			
	DETAIL 1	DETAIL 2	DETAIL 3	
	ALL pH RANGES	ALL pH RANGES	ALL pH RANGES	pH>5
AL TYPE 2 CSP	X	X		X
POLYMER PRECOAT CSP	X	X	X	
ALUMINUM	X	X	X	
RCP	X	X		X
HDPE	X			

5 PIPE BEDDING
N.T.S.

GWINNETT COUNTY DEPARTMENT OF TRANSPORTATION
UTILITY STREET CUT DETAIL

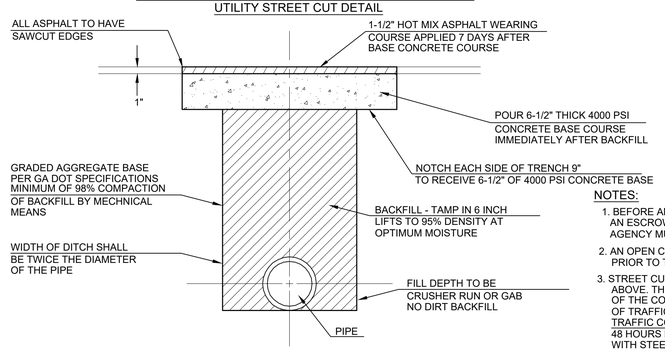

NOTES:
1. BEFORE ANY CONTRACTOR OR AGENCY CAN CUT A ROAD FOR ANY PURPOSE, AN ESCROW AGREEMENT BETWEEN THE COUNTY AND THAT CONTRACTOR OR AGENCY MUST BE SIGNED.
2. AN OPEN CUT PERMIT MUST BE OBTAINED BY THE CONTRACTOR OR AGENCY PRIOR TO THE START OF ANY DEMOLITION OR CONSTRUCTION.
3. STREET CUTS MUST BE REPAIRED IN ACCORDANCE WITH THE SPECIFICATIONS ABOVE. THE BOND WILL BE RELEASED 30 DAYS AFTER COMPLETION AND INSPECTION OF THE CONSTRUCTION. THE CONSTRUCTION MUST OCCUR UNDER THE PROTECTION OF TRAFFIC CONTROL SIGNING REQUIREMENTS OUTLINED IN THE MANUAL ON TRAFFIC CONTROL DEVICES. THE TRANSPORTATION DEPARTMENT WILL BE NOTIFIED 48 HOURS PRIOR TO CONSTRUCTION. ANY CUT LEFT OVERNIGHT WILL BE COVERED WITH STEEL PLATES SECURED TO THE PAVEMENT.
4. PERMIT HOLDER MUST CONTACT GWINNETT COUNTY ROAD MAINTENANCE AT 770-822-7414 FOR AN INSPECTION OF THE TRENCH PRIOR TO POURING THE CONCRETE BASE OR WILL FORFEIT YOUR BOND.

6 PAVEMENT PATCH FOR OPEN CUT
NTS

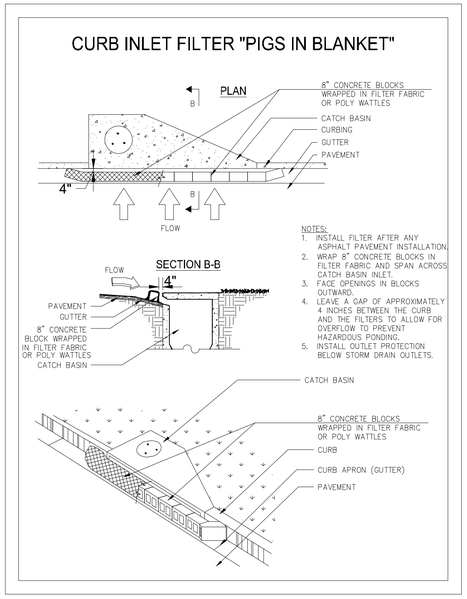

NOTES:
1. INSTALL FILTER AFTER ANY ASPHALT PAVEMENT INSTALLATION.
2. WRAP 8" CONCRETE BLOCKS IN FILTER FABRIC AND SPAN ACROSS CATCH BASIN INLET.
3. FACE OPENINGS IN BLOCKS OUTWARD.
4. LEAVE A GAP OF APPROXIMATELY 4 INCHES BETWEEN THE CURB AND THE FILTERS TO ALLOW FOR OVERFLOW TO PREVENT HAZARDOUS PONDING.
5. INSTALL OUTLET PROTECTION BELOW STORM DRAIN OUTLETS.

Sd2-P TEMPORARY INLET SEDIMENT TRAP (Sd-2-P, PIG-N-BLANKET)
NTS

GEORGIA811
www.Georgia811.com

Bowman
Certificate of Authorization License No. LSF001241
Bowman Consulting Group Ltd
4174 Silver Peak Parkway
Suwanee, GA 30024
Phone: (770) 932-6550
www.bowman.com

© 2021 Bowman Consulting Group Ltd

CONSTRUCTION DETAILS
CDBG PROJECT FOR MCMILLAN ROAD
PAVING, DRAINAGE, AND SIDEWALK IMPROVEMENTS
McMILLAN ROAD
DACULA, GA 30019
CITY OF DACULA, GA
GWINNETT COUNTY

CONSULTANT PROJECT #
200295-01-002

GEORGIA REGISTERED PROFESSIONAL ENGINEER KEVIN D. WHIGHAM 5/24/24

PLAN STATUS	
5/24/2024	BID SET

DATE	DESCRIPTION	
--	RWH	KDW
DESIGN	DRAWN	CHKD

SCALE .
JOB No. 200295-01-002
DATE : May 31, 2024
FILE No. .
SHEET No. C300

May 31, 2024
File Path:V:\200295 - McMillan Rd Project\200295-01-002 (ENG) - City of Dacula McMillan Project\Engineering\Engineering Plans\200295-01-002 C100 Site Plan.dwg
THIS DOCUMENT, TOGETHER WITH THE CONCEPTS AND DESIGNS PRESENTED HEREIN, IS AN INSTRUMENT OF SERVICE, IS INTENDED ONLY FOR THE SPECIFIC PURPOSE AND CLIENT FOR WHICH IT WAS PREPARED. REUSE OF AND IMPROPER RELIANCE ON THIS DOCUMENT WITHOUT WRITTEN AUTHORIZATION AND ADAPTATION BY BOWMAN CONSULTING SHALL BE WITHOUT LIABILITY TO BOWMAN CONSULTING.

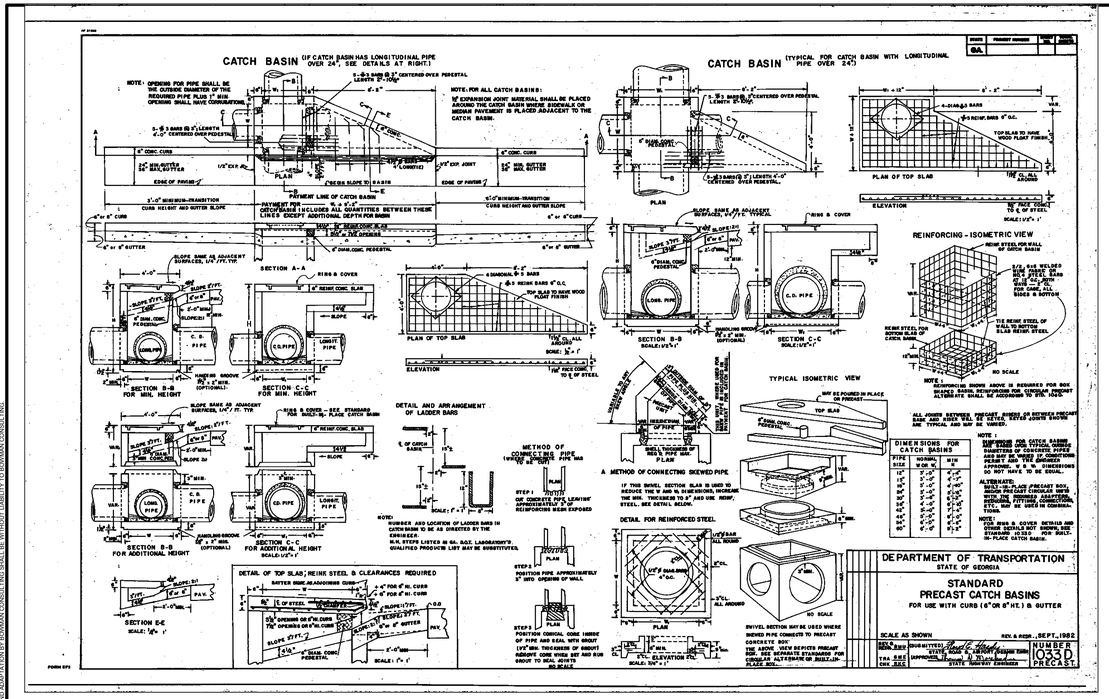

1 SINGLE WING CATCH BASIN DETAIL (GADOT STD. 1033D)

NTS

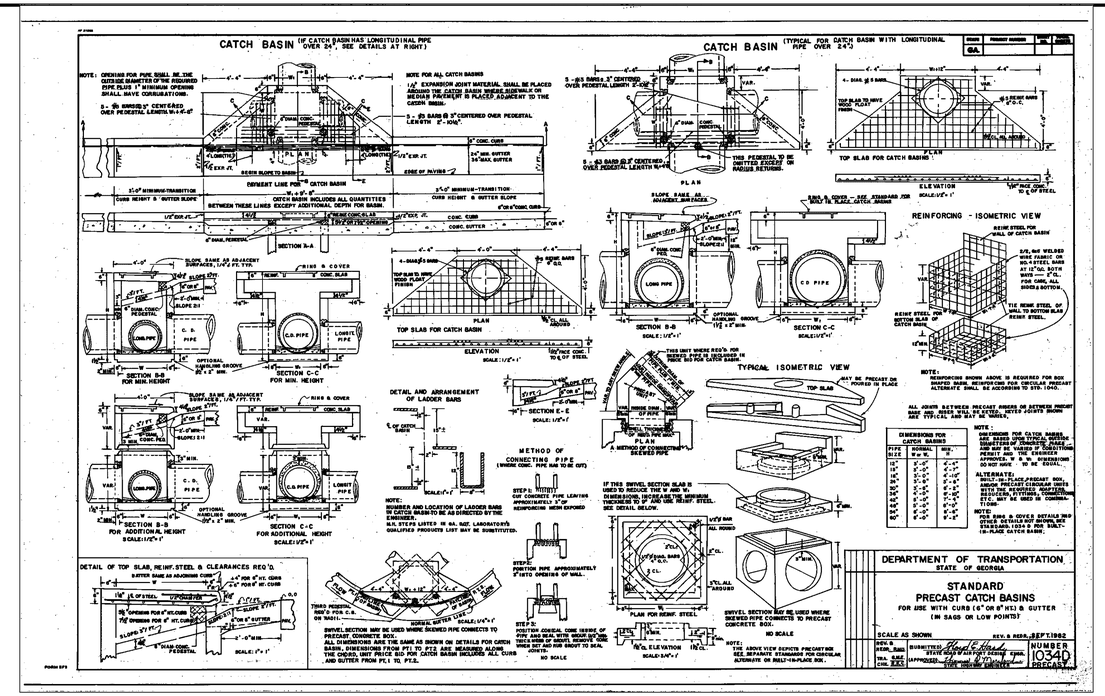

2 DOUBLE WING CATCH BASIN DETAIL (GADOT STD. 1034D)

NTS

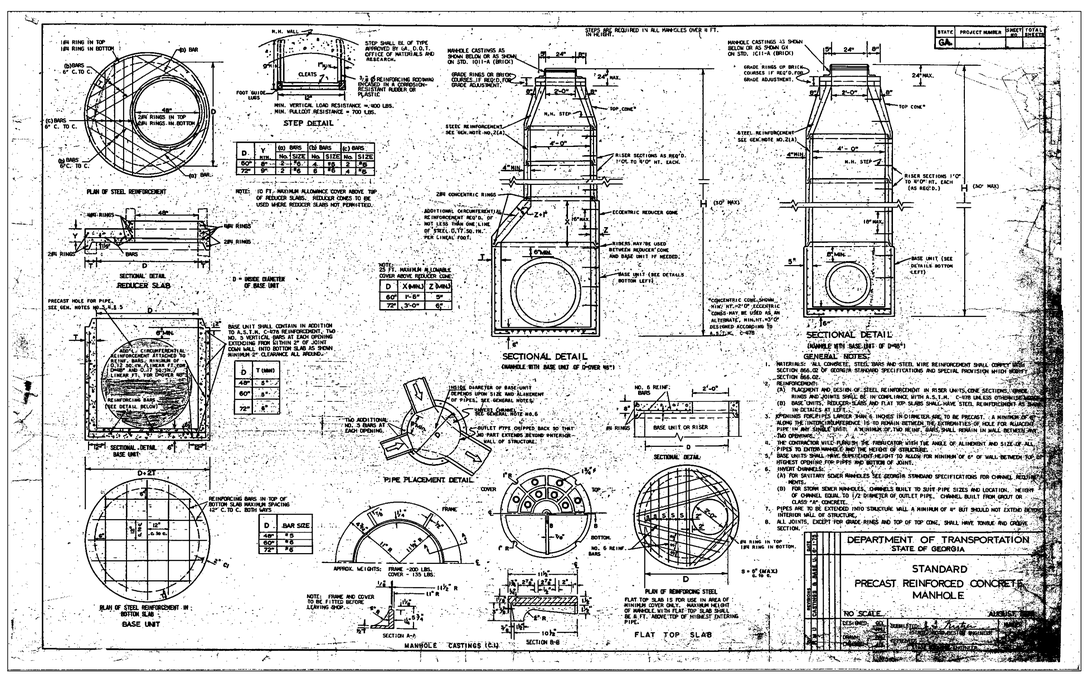

3 JUNCTION BOX (JB) GADOT STD. 1011A

N.T.S.

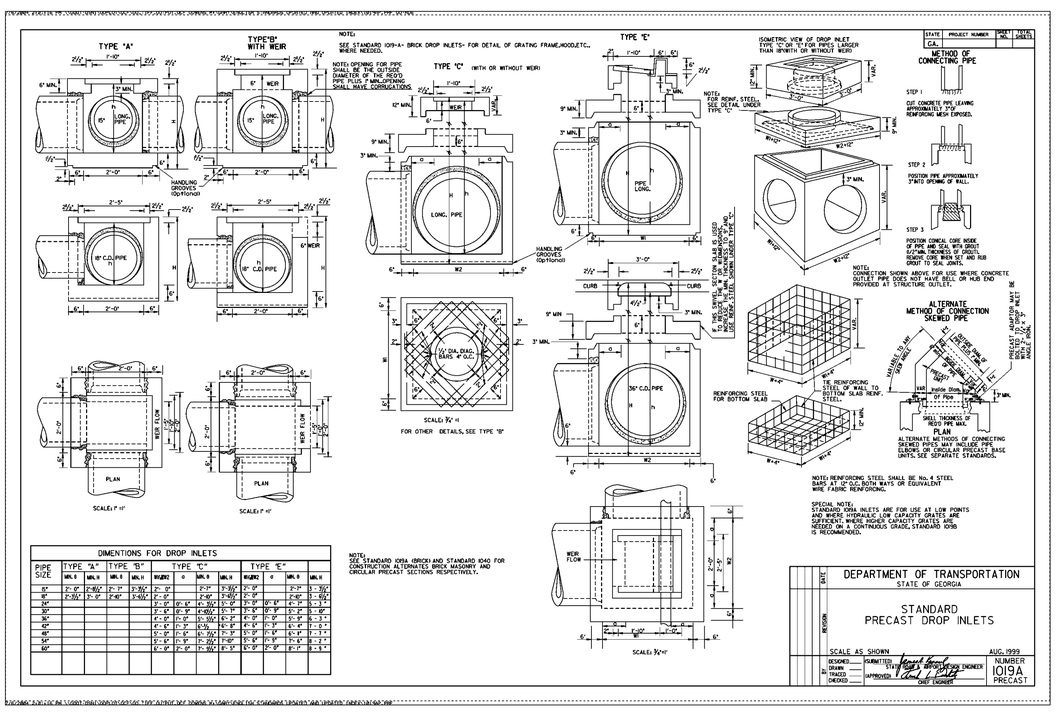

4 DROP INLET (DI) GADOT STD. 1019A

N.T.S.

GEORGIA811
www.Georgia811.com

Bowman
Certificate of Authorization License No. LSF001241

Bowman Consulting Group Ltd
4174 Silver Peak Parkway
Suwanee, GA 30024
Phone: (770) 932-6550
www.bowman.com

© 2021 Bowman Consulting Group Ltd.

CONSTRUCTION DETAILS
CDBG PROJECT FOR MCMILLAN ROAD
PAVING, DRAINAGE, AND SIDEWALK IMPROVEMENTS
McMILLAN ROAD
DACULA, GA 30019
CITY OF DACULA, GA
GWINNETT COUNTY

CONSULTANT PROJECT #
200295-01-002

GEORGIA REGISTERED PROFESSIONAL ENGINEER KEVIN D. WHIGHAM 5/24/24

PLAN STATUS	
5/24/2024	BID SET

DATE	DESCRIPTION	
--	RWH	KDW
DESIGN	DRAWN	CHKD

SCALE .
JOB No. 200295-01-002
DATE : May 31, 2024
FILE No. .
SHEET No. C301

THIS DOCUMENT TOGETHER WITH THE CONCEPTS AND DESIGNS PRESENTED HEREIN, AS AN INSTRUMENT OF SERVICE, IS INTENDED ONLY FOR THE SPECIFIC PURPOSE AND CLIENT FOR WHICH IT WAS PREPARED. REUSE OF AND IMPROPER RELIANCE ON THIS DOCUMENT WITHOUT WRITTEN AUTHORIZATION AND ADAPTATION BY BOWMAN CONSULTING SHALL BE WITHOUT LIABILITY TO BOWMAN CONSULTING.

May 31, 2024
File Path:V:\200295_McMillan Rd Project\200295-01-002 (ENG)_City of Dacula McMillan Project\Engineering\Engineering Plans\200295-01-02 C100 Site Plan.dwg

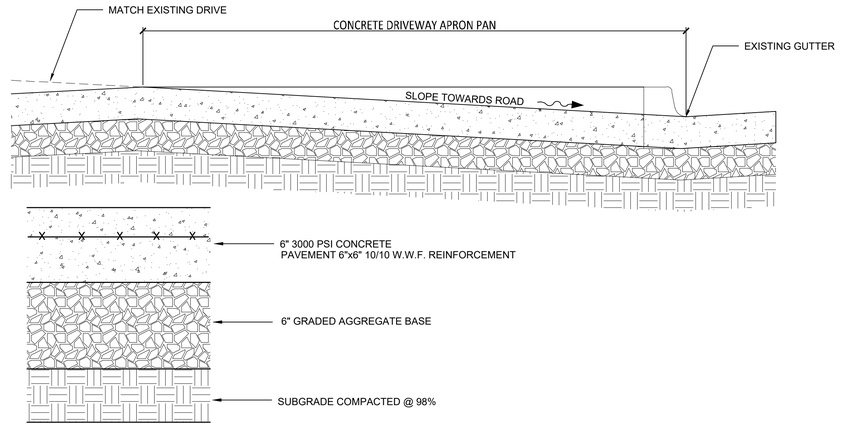

1 CONCRETE DRIVEWAY DETAIL

N.T.S.

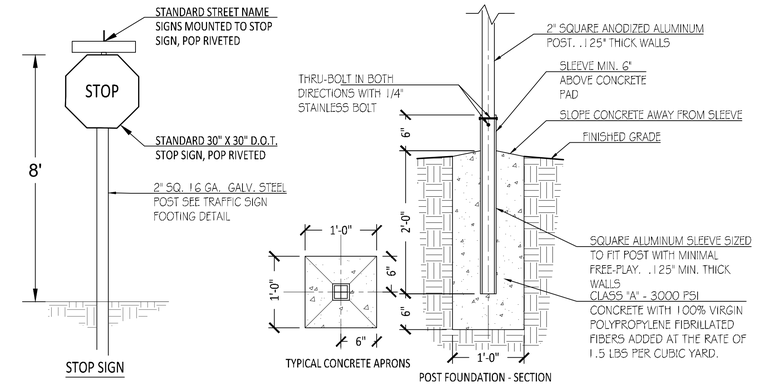

GENERAL NOTES:

1. ALL SIGNS, EXCEPT STOP SIGNS SHALL COMPLY W/ ANSI 117.1-86, 4.30

2 STREET SIGN DETAIL

N.T.S.

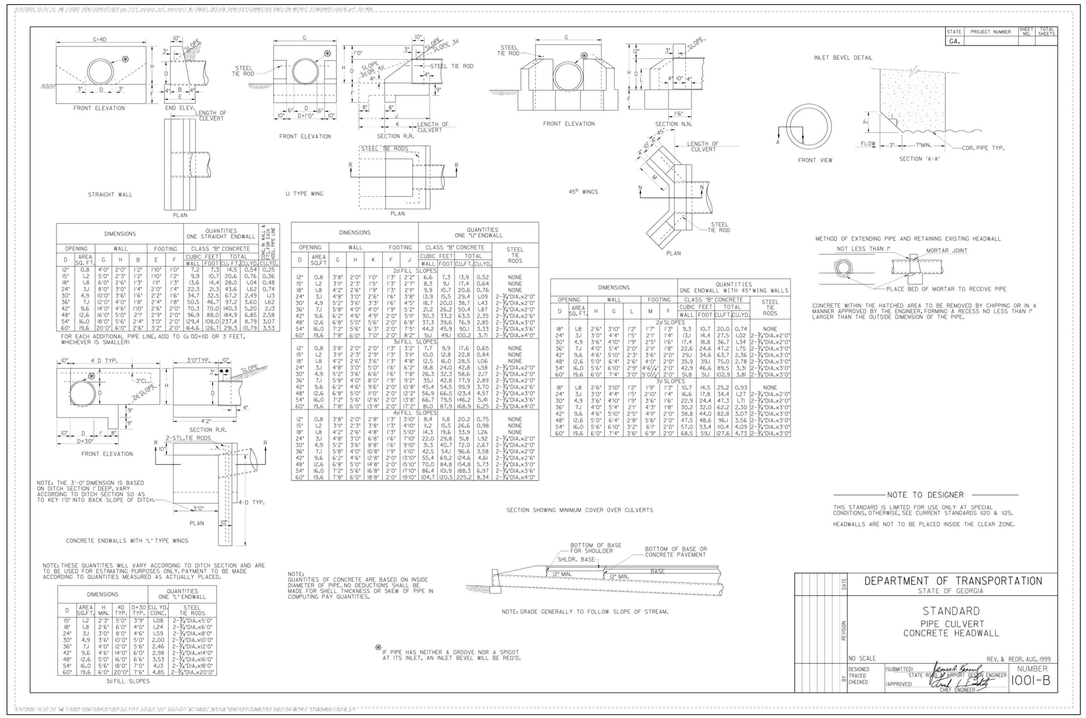

3 CONCRETE HEADWALL DETAIL (GADOT STD. 1001B)

NTS

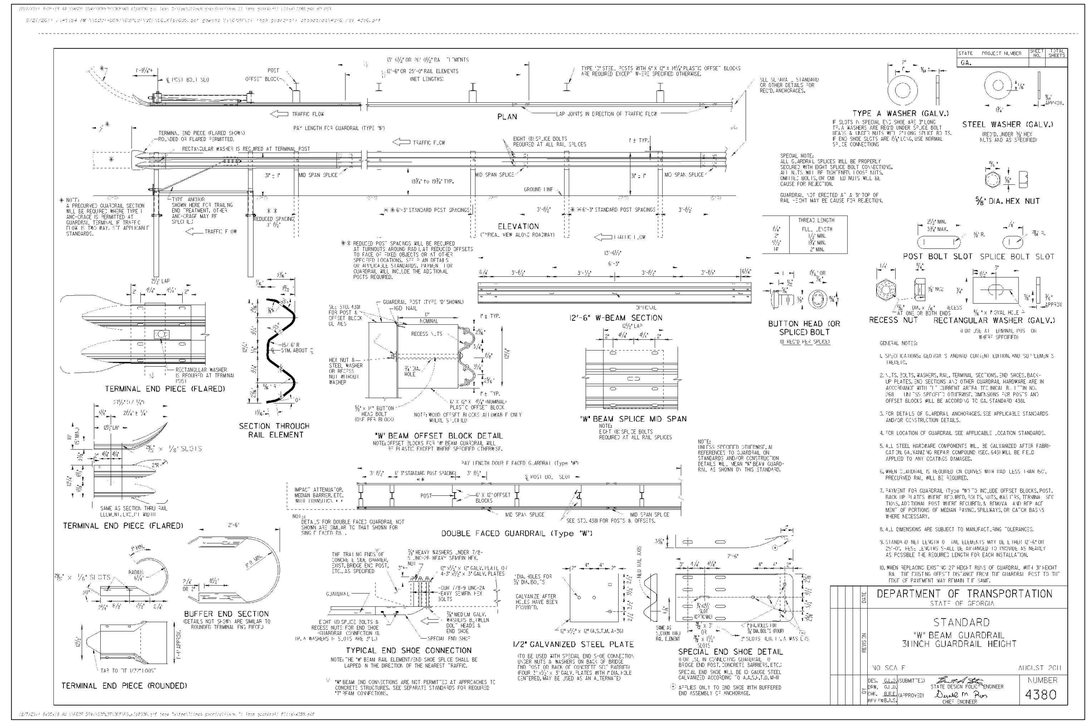

4 GUARDRAIL DETAIL (GADOT STD. 4380)

NTS

Bowman
Certificate of Authorization License No. LSF001241
Bowman Consulting Group Ltd
4174 Silver Peak Parkway
Suwanee, GA 30024
Phone: (770) 932-6550
www.bowman.com
© 2021 Bowman Consulting Group Ltd.

CONSTRUCTION DETAILS
CDBG PROJECT FOR MCMILLAN ROAD
PAVING, DRAINAGE, AND SIDEWALK IMPROVEMENTS
McMILLAN ROAD
DACULA, GA 30019
GWINNETT COUNTY CITY OF DACULA, GA

CONSULTANT PROJECT #
200295-01-002

PLAN STATUS	
5/24/2024	BID SET

DATE	DESCRIPTION	
--	RWH	KDW
DESIGN	DRAWN	CHKD

SCALE .
JOB No. 200295-01-002
DATE : May 31, 2024
FILE No. .
SHEET No. C302

THIS DOCUMENT TOGETHER WITH THE CONCEPTS AND DESIGNS PRESENTED HEREIN, AS AN INSTRUMENT OF SERVICE, IS INTENDED ONLY FOR THE SPECIFIC PURPOSE AND CLIENT FOR WHICH IT WAS PREPARED. REUSE OF AND IMPROPER RELIANCE ON THIS DOCUMENT WITHOUT WRITTEN AUTHORIZATION AND ADAPTATION BY BOWMAN CONSULTING SHALL BE WITHOUT LIABILITY TO BOWMAN CONSULTING.

GEORGIA811
www.Georgia811.com

May 31, 2024
File Path:V:\200295 - McMillan Rd Project\200295-01-002 (ENG) - City of Dacula McMillan Project\Engineering\Engineering Plans\200295-01-02 C100 Site Plan.dwg