SUN CREDIT UNION

9290 STIRLING RD., COOPER CITY, FLORIDA 33024

SITE DEVELOPMENT PLANS

PARCEL / FOLIO No.
514105310010

LEGAL DESCRIPTION

TRACT 6, LESS THE SOUTH 1000 FEET THEREOF, AND LESS THE NORTH 50 FEET AND THE WEST 30 FEET THEREOF FOR ROAD RIGHT-OF-WAY, IN SECTION 5, TOWNSHIP 51 SOUTH, RANGE 41 EAST, "THE EVERGLADES SUGAR AND LAND CO. SUBDIVISION OF SECTIONS 4, 5, 8, 9, 16, 17, 20, 21, 28, 29, 32 AND 33 TWP 51 SO, RANGE 41 EAST", ACCORDING TO THE PLAT THEREOF, AS RECORDED IN PLAT BOOK 2, PAGE 75, OF THE PUBLIC RECORDS OF DADE COUNTY, FLORIDA.

SAID LANDS SITUATE, LYING AND BEING IN COOPER CITY, BROWARD COUNTY, FLORIDA.

PROJECT DIRECTORY

OWNER/DEVELOPER:
SUN CREDIT UNION
701 PROMENADE DRIVE, SUITE 105
PEMBROKE PINES, FLORIDA 33026
TEL.: (954) 967-4441

CIVIL ENGINEER:
MILLER LEGG & ASSOCIATES
13680 NW 5TH STREET, SUITE 200
SUNRISE, FLORIDA 33325
TEL.: (954) 436-7000

LANDSCAPE ARCHITECT:
MILLER LEGG & ASSOCIATES
13680 NW 5TH STREET, SUITE 200
SUNRISE, FLORIDA 33325
TEL.: (954) 436-7000

SURVEYOR:
PULICE LAND SURVEYORS, INC.
5381 NOB HILL ROAD
SUNRISE, FLORIDA 33351
TEL.: (954) 572-1777

ARCHITECT:
ASANTE DESIGN GROUP LLC
5255 N. FEDERAL HIGHWAY, SUITE 315
BOCA RATON, FLORIDA 33487
TEL.: (561) 349-5151

CITY:
CITY OF COOPER CITY
9090 SW 50TH PLACE
COOPER CITY, FLORIDA 33328
TEL.: (954) 434-4300

COUNTY:
BROWARD COUNTY
115 S. ANDREWS AVENUE
FORT LAUDERDALE, FLORIDA 33301
TEL.: (954) 764-4357



TOWNSHIP 51S – RANGE 41E – SECTION 05

LOCATION MAP
N.T.S.

MILLER LEGG
South Florida Office: 13680 NW 5th Street, Suite 200
Sunrise, Florida · 33325
954-436-7000
www.millerlegg.com
Certificate of Authorization: LB6680

SHEET INDEX

Sheet Number	Sheet Title
C0.0	COVER SHEET
C1.0	GENERAL NOTES & SPECIFICATIONS
C1.1	CIVIL LEGEND, ABBREVIATIONS, & SYMBOLS
C2.0	SITE CLEARING & DEMOLITION PLAN
C3.0	SITE ADDRESSING PLAN
C3.1	SITE GEOMETRY, MARKING, & SIGNAGE PLAN
C3.2	GENERAL CONSTRUCTION DETAILS
C4.0	SITE PAVING, GRADING, & DRAINAGE PLAN
C4.1	TYPICAL CROSS SECTIONS
C4.2	DRAINAGE DETAILS
C4.3	DRAINAGE DETAILS
C5.0	SITE UTILITY PLAN
C5.1	WATER & SEWER DETAILS
C5.2	WATER & SEWER DETAILS & PROFILES
C5.3	LIFT STATION DETAILS
C6.0	STORMWATER POLLUTION PREVENTION PLAN
C6.1	STORMWATER POLLUTION PREVENTION DETAILS
C7.0	EMERGENCY VEHICLE CIRCULATION ANALYSIS

Sheet Number	Sheet Title
L1.0	TREE DISPOSITION PLAN
L2.0	LANDSCAPE PLAN
L2.1	LANDSCAPE DETAILS
L2.2	LANDSCAPE NOTES AND SCHEDULE

CENTRAL BROWARD WATER CONTROL DISTRICT
Contact: 954-432-5110
Plan Approved Date: 3/23/2026
Signed:
Note:

Approved, No Exceptions Taken [X]
Approved, Make Corrections Noted [ ]
Amend, Resubmit [ ]
District Engineer
CENTRAL BROWARD WATER CONTROL DISTRICT
Agenda Item 7.B. 11/12/25

07-0048-180-05

1	7/22/24	REV. PER DRC COMMENTS		
	5/10/24	REVIEW SET		
NO.	DATE	REVISIONS	BY	CHKD.

JOAQUIN A. MOJICA — LICENSE — No. 60488 — STATE OF FLORIDA — PROFESSIONAL ENGINEER
APPROVED : JOAQUIN A. MOJICA, P.E.
FLA. REGISTRATION NO. 60488 DATE : 10/24/2025

LANDSCAPE ARCHITECT — BRIAN R. SHORE — LA6666770 — STATE OF FLORIDA
APPROVED : BRIAN R. SHORE, RLA
FLA. REGISTRATION NO. LA6666770 DATE : 10/24/2025

23-00434 **SUN CREDIT UNION**

V:_PROJECTS\2023\23-00434 - SUN CREDIT UNION\DRAWINGS\23-00434_CVR.DWG by MGRINBANK 10/24/2025 6:59:14 AM

GENERAL NOTES

GENERAL NOTES ON THE PROJECT PLANS AND DRAWINGS ARE SOLELY TO AID AND ASSIST THE CONTRACTOR WITH THE FIELD OPERATIONS FOR THE PROJECT. SAID GENERAL NOTES MAY NOT FULLY DESCRIBE ALL OF THE REQUIREMENTS FOR AN ITEM. THEREFORE, THE CONTRACTOR SHALL READ AND VERIFY THE CONTRACT DOCUMENTS, INCLUDING BUT NOT LIMITED TO THE PLANS, SPECIFICATIONS, GENERAL TERMS AND CONDITIONS, AND THE SUPPLEMENTAL TERMS AND CONDITIONS, TO FULLY UNDERSTAND AND COMPLY WITH ALL THE REQUIREMENTS THEREIN. THE LOCATION AND SIZE OF ALL EXISTING UTILITIES AND TOPOGRAPHY HAVE BEEN PREPARED FROM INFORMATION AVAILABLE TO THE ENGINEER. THIS INFORMATION IS NOT GUARANTEED AND IT IS THE CONTRACTOR'S RESPONSIBILITY TO DETERMINE THE EXACT LOCATION OF ANY EXISTING UTILITIES AND TOPOGRAPHY PRIOR TO CONSTRUCTION. THE CONTRACTOR SHALL VERIFY ALL UTILITIES, BY ELECTRONIC METHODS AND BY HAND EXCAVATION IN COORDINATION WITH ALL UTILITY COMPANIES, PRIOR TO BEGINNING ANY CONSTRUCTION OPERATIONS. THIS WORK BY THE CONTRACTOR SHALL BE CONSIDERED INCIDENTAL TO THE CONTRACT AND NO ADDITIONAL COMPENSATION SHALL BE ALLOWED.

1. APPLICABLE CODES
1.1. GENERAL
ALL CONSTRUCTION, MATERIALS AND TESTING SHALL CONFORM TO THE STANDARDS AND SPECIFICATIONS OF CITY OF COOPER CITY, CENTRAL BROWARD WATER CONTROL DISTRICT (CBWCD), BROWARD COUNTY, AND ALL OTHER LOCAL AND NATIONAL CODES WHERE APPLICABLE. WHEN ANY OF THE GOVERNING REGULATORY AGENCY'S STANDARDS ARE IN CONFLICT, THE MORE STRINGENT OF THE TWO SHALL APPLY.
1.2. CONSTRUCTION SAFETY
ALL CONSTRUCTION SHALL BE DONE IN CONFORMANCE WITH THE RULES AND REGULATIONS OF THE OCCUPATIONAL SAFETY AND HEALTH ADMINISTRATION (OSHA) AND THE MANUAL OF UNIFORM TRAFFIC CONTROL DEVICES (MUTCD).
1.3. TRENCH SAFETY ACT
CONTRACTOR SHALL BE SOLELY RESPONSIBLE FOR COMPLIANCE WITH THE STATE OF FLORIDA TRENCH SAFETY ACT.
1.4. SURVEY DATA
ALL ELEVATIONS ON THE PLANS OR REFERENCED IN THE SPECIFICATIONS UNLESS OTHERWISE NOTED, ARE BASED ON NORTH AMERICAN VERTICAL DATUM OF 1988 (NAVD 88').

2. PRECONSTRUCTION RESPONSIBILITIES AND NOTICES
2.1. THE CONTRACTOR SHALL OBTAIN A SUNSHINE STATE ONE CALL AT 811 CERTIFICATION NUMBER AT LEAST 48 HOURS PRIOR TO BEGINNING ANY EXCAVATION.
2.2. PRIOR TO BEGINNING CONSTRUCTION, THE CONTRACTOR SHALL VERIFY THE SIZE, LOCATION, ELEVATION, AND MATERIAL OF ALL EXISTING UTILITIES WITHIN THE AREA OF CONSTRUCTION.
2.3. EXISTING UTILITY LOCATIONS SHOWN ON THESE PLANS ARE APPROXIMATE. THE ENGINEER ASSUMES NO RESPONSIBILITY FOR THE ACCURACY OF EXISTING UTILITIES SHOWN OR FOR ANY EXISTING UTILITIES NOT SHOWN.
2.4. THE CONTRACTOR SHALL BE RESPONSIBLE FOR DAMAGE TO ANY EXISTING UTILITIES FOR WHICH HE FAILS TO REQUEST LOCATIONS FROM THE UTILITY OWNER. HE IS RESPONSIBLE AS WELL FOR DAMAGE TO ANY EXISTING UTILITIES WHICH ARE PROPERLY LOCATED.
2.5. CONTRACTOR SHALL OBTAIN AND KEEP COPIES OF ALL REQUIRED PERMITS ONSITE PRIOR TO COMMENCEMENT OF CONSTRUCTION. CONTRACTOR ASSUMES ALL RESPONSIBILITY FOR WORK PERFORMED WITHOUT PERMITS.
2.6. ADDITIONAL COORDINATION FOR UTILITY CONFLICTS, R.F.I.'S AND CONTRACT EXTENDED TIME BEYOND THE ORIGINAL SCOPE OF CONSTRUCTION DURATION (AFTER THE CONTRACTOR CONSTRUCTION NOTICE TO PROCEED) AND EXCLUDING DOCUMENTED WORKAGE STOP ORDERS ISSUED BY CLIENT TO CONTRACTOR AND CONSULTANT WILL BE BILLED TO THE CONTRACTOR VIA THE OWNER AT $135 PER HOUR.

3. INSPECTIONS
3.1. THE CONTRACTOR SHALL NOTIFY CITY OF COOPER CITY, THE ENGINEER OF RECORD AND BROWARD COUNTY, IF APPLICABLE, AT LEAST 48 HOURS PRIOR TO BEGINNING CONSTRUCTION AND PRIOR TO THE INSPECTION OF THE FOLLOWING ITEMS:
3.1.1. STORM DRAINAGE
3.1.2. SANITARY SEWER
3.1.3. WATER SYSTEM
3.1.4. SUBGRADE – SUBMIT AND HAVE APPROVED DENSITIES PRIOR TO PLACEMENT OF ROCK
3.1.5. LIMEROCK BASE – SUBMIT AND HAVE APPROVED DENSITIES AND AS-BUILTS PRIOR TO THE PLACEMENT OF ANY ASPHALT.
3.1.6. ASPHALTIC CONCRETE
3.1.7. FINAL INSPECTION
3.2. ALL INSPECTIONS SHALL BE MADE BY CITY OF COOPER CITY. THE ENGINEER OF RECORD WILL PROVIDE GENERAL CONSTRUCTION OBSERVATION SERVICES.

4. SHOP DRAWINGS
4.1. PRIOR TO THEIR CONSTRUCTION OR INSTALLATION, SHOP DRAWINGS SHALL BE SUBMITTED TO AND REVIEWED BY CITY OF COOPER CITY AND ENGINEER OF RECORD FOR SANITARY MANHOLES, CATCH BASINS, FIRE HYDRANTS, VALVES AND OTHER MECHANICAL/ELECTRICAL EQUIPMENT WITH ASSOCIATED STRUCTURES, INCLUDING ALL DATA. CATALOGUE LITERATURE SHALL BE SUBMITTED FOR WATER AND SEWER PIPES, FITTINGS, AND APPURTENANCES.
4.2. PRIOR TO SUBMITTING SHOP DRAWINGS TO THE ENGINEER, THE CONTRACTOR SHALL REVIEW AND APPROVE THE DRAWINGS, AND SHALL NOTE IN RED ANY DEVIATIONS FROM THE ENGINEERS' PLANS OR SPECIFICATIONS.
4.3. INDIVIDUAL SHOP DRAWINGS FOR ALL PRECAST STRUCTURES ARE REQUIRED. CATALOGUE LITERATURE WILL NOT BE ACCEPTED FOR PRECAST STRUCTURES.

5. TEMPORARY FACILITIES
5.1. TEMPORARY UTILITIES
IT SHALL BE THE CONTRACTOR'S RESPONSIBILITY TO ARRANGE FOR OR SUPPLY TEMPORARY WATER SERVICE, SANITARY FACILITIES AND ELECTRICITY TO HIS EMPLOYEES AND SUBCONTRACTORS FOR THEIR USE DURING CONSTRUCTION.
5.2. TRAFFIC REGULATION
5.2.1. MAINTENANCE OF TRAFFIC IN THE PUBLIC RIGHT-OF-WAY SHALL BE IN ACCORDANCE WITH THE MUTCD.
5.2.2. ALL OPEN TRENCHES AND HOLES ADJACENT TO ROADWAYS OR WALKWAYS SHALL BE PROPERLY MARKED AND BARRICADED TO ASSURE THE SAFETY OF BOTH VEHICULAR AND PEDESTRIAN TRAFFIC.
5.2.3. NO TRENCHES OR HOLES NEAR WALKWAYS OR IN ROADWAYS OR THEIR SHOULDERS ARE TO BE LEFT OPEN DURING NIGHTTIME HOURS WITHOUT EXPRESS PERMISSION OF THE ENGINEER, CITY OF COOPER CITY AND LOCAL OR BROWARD COUNTY AUTHORITY.
5.2.4. ALL CONSTRUCTION WITHIN FDOT RIGHT-OF-WAYS MUST CONFORM WITH FDOT SPECIFICATIONS, STANDARDS AND PERMIT REQUIREMENTS. NO WORK SHALL COMMENCE WITHIN FDOT RIGHT-OF-WAYS WITHOUT AN FDOT PERMIT. FULL LANE WIDTH RESTORATION TO MATCH EXISTING PAVEMENT SECTION IS REQUIRED IN ACCORDANCE WITH STANDARDS FOR PROPOSED WORK WITHIN FDOT RIGHT-OF-WAYS.
5.2.5. CONTRACTOR SHALL PREPARE AND SUBMIT MAINTENANCE OF TRAFFIC PLAN (MOT) WHERE REQUIRED BY FEDERAL, STATE, COUNTY OR LOCAL AGENCIES HAVING JURISDICTION. CONTRACTOR SHALL OBTAIN ALL REQUIRED APPROVALS AND PERMITS ASSOCIATED WITH THE MOT'S. ALL MOT'S ARE TO BE AMERICAN TRAFFIC SAFETY SERVICES ASSOCIATION CERTIFIED.

6. PROJECT CLOSEOUT
6.1. CLEANING OUT
6.1.1. DURING CONSTRUCTION, THE PROJECT SITE AND ALL ADJACENT AREAS SHALL BE MAINTAINED IN A NEAT AND CLEAN MANNER. UPON FINAL CLEAN UP, THE PROJECT SITE SHALL BE LEFT CLEAR OF ALL SURPLUS MATERIAL OR TRASH. THE PAVED AREAS SHALL BE SWEPT BROOM CLEAN AS DIRECTED BY THE ENGINEER.
6.1.2. THE CONTRACTOR SHALL RESTORE OR REPLACE, WHEN AND AS DIRECTED BY THE ENGINEER OR CITY OF COOPER CITY, ANY PUBLIC OR PRIVATE PROPERTY DAMAGED BY HIS WORK, EQUIPMENT, EMPLOYEES OR THOSE OF HIS SUBCONTRACTORS TO A CONDITION AT LEAST EQUAL TO THAT EXISTING IMMEDIATELY PRIOR TO THE BEGINNING OF OPERATIONS. TO THIS END, THE CONTRACTOR SHALL PERFORM AS REQUIRED ALL NECESSARY HIGHWAY OR DRIVEWAY, WALK, IRRIGATION AND LANDSCAPING WORK. SUITABLE MATERIALS AND METHODS SHALL BE USED FOR SUCH RESTORATION.
6.1.3. WHERE MATERIAL OR DEBRIS HAS WASHED OR FLOWED INTO OR BEEN PLACED IN WATER COURSES, DITCHES, DRAINS, CATCH BASINS, OR ELSEWHERE AS A RESULT OF THE CONTRACTOR'S OPERATIONS, SUCH MATERIAL OR DEBRIS SHALL BE REMOVED, SATISFACTORILY DISPOSED OF DURING PROGRESS OF WORK, AND THE AREA KEPT IN A CLEAN AND NEAT CONDITION AS DIRECTED BY THE ENGINEER.
6.1.4. CONTRACTOR SHALL DISPOSE OF ALL SITE DEMOLITION IN ACCORDANCE WITH STATE AND LOCAL REGULATIONS.
6.2. PROJECT RECORD DOCUMENTS
6.2.1. THE CONTRACTOR SHALL MAINTAIN ACCURATE AND COMPLETE RECORDS OF WORK ITEMS COMPLETED.
6.2.2. PRIOR TO THE PLACEMENT OF ANY ASPHALT OR CONCRETE PAVEMENT, THE CONTRACTOR SHALL SUBMIT TO THE ENGINEER "AS-BUILT" PLANS SHOWING LIMEROCK BASE GRADES, AND ALL DRAINAGE, WATER AND SEWER IMPROVEMENTS. PAVING OPERATIONS SHALL NOT COMMENCE UNTIL THE ENGINEER AND THE APPROVING AGENCY HAS REVIEWED THE "AS-BUILTS".
6.2.3. ALL REQUIRED DENSITY AND LBR TEST RESULTS FOR SUBGRADE SHALL BE PROVIDED TO THE ENGINEER AND CITY OF COOPER CITY PRIOR TO PLACING LIMEROCK BASE MATERIAL.
6.2.4. ALL REQUIRED DENSITY AND LBR TEST RESULTS FOR LIMEROCK SHALL BE PROVIDED TO THE ENGINEER AND CITY OF COOPER CITY PRIOR TO PLACING ASPHALT.
6.2.5. ALL "AS-BUILT" INFORMATION SUBMITTED TO THE ENGINEER SHALL BE SUFFICIENTLY ACCURATE, CLEAR AND LEGIBLE TO THE SATISFACTION OF THE ENGINEER THAT THE INFORMATION PROVIDES A TRUE REPRESENTATION OF THE IMPROVEMENTS CONSTRUCTED.
6.2.6. LAKE AS-BUILTS WILL BE CROSS SECTIONED SHOWING THE DESIGNED SECTION AS DASHED, AS-BUILT SECTION AS SOLID, AND HAVE THE TOP OF BANK REFERENCE TO THE LAKE MAINTENANCE EASEMENT. SPACING BETWEEN EACH CROSS-SECTION SHALL BE SUCH AS TO PROVIDE ENOUGH DATA TO DETERMINE IF THE LAKE WAS CONSTRUCTED AS DESIGNED.
6.2.7. UPON COMPLETION OF CONSTRUCTION, THE CONTRACTOR SHALL SUBMIT TO THE ENGINEER OF RECORD TWO COMPLETE SETS OF "AS-BUILT" CONSTRUCTION DRAWINGS. THESE DRAWINGS SHALL BE MARKED TO SHOW "RECORD DRAWING" OR "AS-BUILT" CONSTRUCTION CHANGES AND DIMENSIONED LOCATIONS AND ELEVATIONS OF ALL IMPROVEMENTS AND SHALL BE SIGNED AND SEALED BY A REGISTERED LAND SURVEYOR OR ENGINEER. FINAL AS-BUILT INFORMATION SHALL BE SUBMITTED ON AN AUTOCAD & PDF FORMAT AS DIRECTED BY THE ENGINEER.

7. DEWATERING PERMIT
7.1. DEWATERING PERMIT IS NOT AVAILABLE FOR THE SITE DEVELOPMENT. IT IS THE CONTRACTOR'S RESPONSIBILITY TO OBTAIN A DEWATERING PERMIT.

8. UNSUITABLE MATERIAL REMOVAL AND DISPOSAL
8.1. CONTRACTOR IS RESPONSIBLE FOR DETERMINATION/INVESTIGATION OF SUBSURFACE CONDITIONS. ALL UNSUITABLE MATERIAL SURFACE AND SUBSURFACE WITHIN AREAS OF CONSTRUCTION IS TO BE REMOVED AND DISPOSED OF IN ACCORDANCE WITH ALL APPLICABLE REGULATIONS. UNSUITABLE MATERIAL INCLUDES BUT IS NOT LIMITED TO: DEBRIS, ORGANICS/MUCK , AND PLASTIC MATERIAL. ALL UNSUITABLE MATERIAL REMOVED SHALL BE REPLACED WITH SUITABLE MATERIAL.

9. GEOTECHNICAL REQUIREMENTS
9.1. CONTRACTOR IS RESPONSIBLE FOR DETERMINATION/INVESTIGATION OF SUBSURFACE CONDITIONS.

10. DEMOLITION NOTES
10.1. PROPER SAFETY PRECAUTIONS SHALL BE TAKEN TO SEPARATE AREA OF DEMOLITION FROM SURROUNDING PROPERTY.
10.2. ALL ASPHALT AND CURB SHALL BE SAWCUT AT THE LIMITS OF DEMOLITION PRIOR TO REMOVAL.
10.3. ALL DEMOLITION TO BE PERFORMED IN A MANNER TO ELIMINATE HAZARDS TO PERSONS AND PROPERTY, MINIMIZE INTERFERENCE WITH USE OF ADJACENT AREAS, PROVIDE NON-DISRUPTION OF SERVICES PROVIDED BY EXISTING UTILITIES TO ADJACENT AREAS, AND TO PROVIDE FREE PASSAGE TO AND FROM ADJACENT AREAS OR STRUCTURES.
10.4. PRIOR TO AND DURING DEMOLITION, CONTRACTOR SHALL TAKE NECESSARY PRECAUTIONS TO AVOID DAMAGE TO EXISTING ITEMS TO REMAIN.
10.5. DEBRIS RESULTING FROM DEMOLITION SHALL BECOME THE PROPERTY OF THE CONTRACTOR AND SHALL BE PROPERLY DISPOSED OF ON A DAILY BASIS. DISPOSAL OF DEBRIS SHALL BE IN COMPLIANCE WITH APPLICABLE FEDERAL, STATE AND LOCAL PERMITS, RULES AND/OR REGULATIONS.
10.6. HAZARDOUS MATERIALS, IF PRESENT, SHALL BE DEALT WITH IN A MANNER CONSISTENT WITH FEDERAL, STATE AND LOCAL REGULATIONS.
10.7. UPON COMPLETION OF DEMOLITION, SITE IS TO BE LEFT IN CLEAN CONDITION FREE OF DEBRIS.
10.8. CONTRACTOR TO PROVIDE PROPER SEDIMENT CONTROL AND PROTECTION OF STORM WATER STRUCTURES, BOTH WITHIN AND OUTSIDE THE LIMITS OF DEMOLITION AND P/L, TO PREVENT DEPOSIT OF SEDIMENTS CONVEYED THROUGH RUNOFF. CONTRACTOR TO CLEAN AND REMOVE SEDIMENTS FROM ALL STRUCTURES AS NEEDED.
10.9. EXISTING UTILITIES INFORMATION IS PROVIDED FOR REFERENCE ONLY. CONTRACTOR IS RESPONSIBLE FOR IDENTIFYING ALL UTILITIES SHOWN OR NOT SHOWN PRIOR TO DEMOLITION. CONTRACTOR SHALL HAVE ALL UTILITIES PROPERLY LOCATED PRIOR TO COMMENCEMENT OF DEMOLITION.
10.10. BRICK AND GROUT ANY REMAINING HOLE OPENINGS IN EXISTING STRUCTURES AFTER REMOVAL OF ANY PIPE DESIGNATED FOR REMOVAL.

11. EARTHWORK
11.3. GENERAL
11.3.1. IT IS THE CONTRACTOR'S RESPONSIBILITY TO REQUEST A COPY OF THE GEOTECHNICAL ENGINEERING SOILS REPORT AND ADHERE TO THE CONDITIONS AND RECOMMENDATIONS STATED WITHIN.
11.3.2. NONE OF THE EXISTING MATERIAL IS TO BE INCORPORATED IN THE LIMEROCK BASE.
11.3.3. ALL SUB-GRADE UNDER PAVED AREAS SHALL HAVE A MINIMUM LBR VALUE OF 40 AND SHALL BE COMPACTED TO 98% OF THE MAXIMUM DENSITY AS DETERMINED BY AASHTO T-180.
11.3.4. ALL FILL MATERIAL IN AREAS NOT TO BE PAVED SHALL BE COMPACTED TO 95% OF THE MAXIMUM DENSITY AS DETERMINED BY AASHTO T-180.
11.3.5. A 2" BLANKET OF TOP SOIL SHALL BE PLACED OVER ALL AREAS TO BE SODDED.
11.4. ON-SITE
11.4.1. ALL ORGANIC AND OTHER UNSUITABLE MATERIAL UNDER THOSE AREAS TO BE PAVED SHALL BE REMOVED TO A DEPTH OF THREE (3) FEET BELOW FINISHED GRADE AND FOR THREE (3) FEET BEYOND THE PERIMETER OF THE PAVING AND DISPOSED OF BY CONTRACTOR AS PART OF WORK.
11.4.2. SUITABLE BACKFILL SHALL BE MINIMUM LBR 40 MATERIAL COMPACTED TO 98% OF THE MAXIMUM DENSITY AS DETERMINED BY AASHTO T-180 THREE (3) FEET BEYOND PERIMETER OF THE PAVING.
11.4.3. ALL UNSUITABLE MATERIAL UNDER EXFILTRATION TRENCH LOCATIONS SHALL BE REMOVED AND DISPOSED OF BY CONTRACTOR AS PART OF THIS WORK.

12. STORM DRAINAGE
12.1. CONTRACTOR MAY UTILIZE ONE OF THE FOLLOWING MATERIALS AS DIRECTED AND APPROVED BY APPROVING AUTHORITY) ON A SIZE FOR SIZE BASIS:
12.1.1. ALUMINUM
12.1.1.1. PIPE SHALL BE ALUMINUM, MANUFACTURED IN CONFORMANCE WITH ASTM B-209. METAL PIPE SHALL NOT BE ALLOWED WITHIN THE ROAD RIGHT-OF-WAY.
12.1.1.2. PIPE SHALL BE SPIRAL RIB DRAINAGE PIPE WITH 3/4" x 3/4" RIBS, APPROXIMATELY 2-1/2" ON CENTER. GAUGE THICKNESS SHALL MEET FHOT STANDARD 945-1.
12.1.1.3. PIPE COUPLING BANDS SHALL BE 12" WIDE STANDARD SPLIT BANDS OF THE SAME ALLOY AS THE PIPE AND MAY BE ONE GAUGE LIGHTER THAN THE PIPE.
12.1.1.4. POLYURETHANE OR OTHER SEALANT SHALL BE USED WITH COUPLING BANDS ON ALL NON-PERFORATED PIPE.
12.1.1.5. CONTECH ULTRA-FLO
12.1.2. REINFORCED CONCRETE (RCP)
12.1.2.1. REQUIREMENTS OF SECTION 449 OF THE FDOT STANDARD SPECIFICATIONS. ALL REINFORCED CONCRETE PIPE SHALL BE CLASS III WATER TIGHT AND CONFORM TO THE STANDARD SPECIFICATIONS
12.1.2.2. JOINTS IN RCP SHALL EMPLOY O-RING TYPE GASKETS AS SPECIFIED IN SECTION 942-1 OF FDOT STANDARD SPECIFICATIONS AND ASTM C443-98.
12.1.2.3. PRECAST CONCRETE MANHOLES AND CATCH BASINS SHALL MEET THE REQUIREMENTS OF ASTM SPECIFICATION C-478 AND 641.
12.1.2.4. CONCRETE FOR PRECAST MANHOLES AND CATCH BASINS SHALL HAVE A MINIMUM COMPRESSIVE STRENGTH OF 4000 PSI AT 28 DAYS.
12.1.2.5. REINFORCING STEEL FOR MANHOLES AND CATCH BASINS SHALL CONFORM TO ASTM SPECIFICATION A-615 AND A-305, LATEST REVISION.
12.1.2.6. ALL RE-BAR SPLICES IN CONCRETE STRUCTURES SHALL HAVE A MINIMUM LAP OF 24 BAR DIAMETERS.
12.1.2.7. ALL JOINTS IN CONCRETE STRUCTURES SHALL BE FINISHED WATERTIGHT.
12.1.2.8. ALL SPACES AROUND PIPING ENTERING OR LEAVING MANHOLES AND CATCH BASINS SHALL BE COMPLETELY FILLED WITH 2:1 CEMENT MORTAR.
12.1.2.9. ALL CONCRETE PIPE SHALL HAVE MODIFIED TONGUE AND GROOVE JOINT AND HAVE RUBBER GASKETS, UNLESS OTHERWISE SPECIFIED.
12.1.3. HIGH DENSITY POLYETHYLENE PIPE (HDPE)
12.1.3.1. HIGH DENSITY POLYETHYLENE PIPE FOR STORM SEWERS SHALL CONFORM TO FDOT 948-2.
12.1.4. POLYVINYL-CHLORIDE PIPE (PVC)
12.1.4.1. POLYVINYL-CHLORIDE PIPE FOR STORM SEWERS SHALL CONFORM TO FDOT 948-1.
12.1.4.2. CONTECH A2000 PVC
12.2. CONCRETE PIPE FOR STORM DRAINAGE SYSTEMS SHALL CONFORM TO THE REQUIREMENTS OF FDOT STANDARD SPECIFICATIONS FOR ROADS AND BRIDGES, CURRENT EDITION, SECTION 430.
12.3. BEDDING AND INITIAL BACKFILL OVER DRAINAGE PIPE SHALL BE SAND WITH NO ROCK LARGER THAN 3/4" & 2" DIAMETER, RESPECTIVELY.
12.4. BACKFILL MATERIAL UNDER PAVED AREAS SHALL BE COMPACTED TO 98% OF THE MAXIMUM DENSITY AS DETERMINED BY AASHTO T-180.
12.5. BACKFILL MATERIAL UNDER AREAS NOT TO BE PAVED SHALL BE COMPACTED TO 95% OF THE MAXIMUM DENSITY AS DETERMINED BY AASHTO T-180 (INCLUDES SWALE AREAS).
12.6. CONTRACTOR SHALL INSTALL AND MAINTAIN TEMPORARY SILT SCREENERS IN CATCH BASINS AND AT LOCATIONS AS DIRECTED BY THE ENGINEER UNTIL FINAL ACCEPTANCE OCCURS.

13. FDEP GENERAL WATER NOTES
13.1. ALL PIPE, PIPE FITTINGS, PIPE JOINT PACKING AND JOINTING MATERIALS, VALVES, FIRE HYDRANTS AND METERS INSTALLED SHALL CONFORM TO APPLICABLE AMERICAN WATER WORKS ASSOCIATION (AWWA) STANDARDS.
13.2. ALL PUBLIC WATER SYSTEM COMPONENTS, EXCLUDING FIRE HYDRANTS, THAT WILL COME INTO CONTACT WITH DRINKING WATER SHALL CONFORM TO NSF INTERNATIONAL STANDARD 61 AS ADOPTED IN RULE 62-555.335, F.A.C., OR OTHER APPLICABLE STANDARDS, REGULATION OR REQUIREMENTS REFERENCED IN PARAGRAPH 62-333.320(3)(B), F.A.C.
13.3. ALL PIPE AND PIPE FITTINGS INSTALLED SHALL BE COLOR CODED OR MARKED IN ACCORDANCE WITH SUBPARAGRAPH 62-555.320(21)(B)3, F.A.C., USING BLUE AS PREDOMINANT COLOR. (UNDERGROUND PLASTIC PIPE SHALL BE SOLID-WALL BLUE PIPE, SHALL HAVE A CO-EXTRUDED BLUE EXTERNAL SKIN, OR SHALL BE WHITE OR BLACK PIPE WITH BLUE STRIPES INCORPORATED INTO OR APPLIED TO THE PIPEWALL; AND UNDERGROUND METAL OR CONCRETE PIPE SHALL HAVE BLUE STRIPES AND APPLIED TO THE PIPEWALL. PIPE STRIPED DURING MANUFACTURING OF THE PIPE SHALL HAVE CONTINUOUS STRIPES THAT RUN PARALLEL TO THE AXIS OF THE PIPE, THAT ARE LOCATED AT NO GREATER THAN 90-DEGREE INTERVALS AROUND THE PIPE AND THAT WILL REMAIN INTACT DURING AND AFTER INSTALLATION OF THE PIPE. IF TAPE OR PAINT IS USED TO STRIPE PIPE DURING PIPE AND THAT IS LOCATED ALONG THE TOP OF THE PIPE; FOR PIPE WITH AN INTERNAL DIAMETER OF 24 INCHES OR GREATER, TAPE OR PAINT SHALL BE APPLIED IN CONTINUOUS LINES ALONG EACH SIDE OF THE PIPE AS WELL AS ALONG THE TOP OF THE PIPE. ABOVEGROUND PIPE SHALL BE PAINTED BLUE OR SHALL BE COLOR CODED OR MARKED LIKE UNDERGROUND PIPE.)
13.4. NEW OR ALTERED WATER MAINS CONSTRUCTED OF POLYVINYL CHLORIDE PIPE SHALL BE PRESSURE AND LEAKAGE TESTED IN ACCORDANCE WITH AWWA STANDARD C603 OR C605, RESPECTIVELY, AS INCORPORATED INTO RULE 62-555.330, F.A.C. AND ALL OTHER NEW OR ALTERED WATER MAINS SHALL BE PRESSURE AND LEAKAGE TESTED IN ACCORDANCE WITH AWWA STANDARD C600 AS INCORPORATED INTO RULE 62-333.330.

14. FDEP GENERAL SEWER NOTES
14.1. APPROPRIATE DEFLECTION TESTS ARE SPECIFIED FOR ALL FLEXIBLE PIPE. TESTING IS REQUIRED AFTER THE FINAL BACKFILL HAS BEEN IN PLACE AT LEAST 30 DAYS TO PERMIT STABILIZATION OF THE SOIL PIPE SYSTEM. TESTING REQUIREMENTS SPECIFY: 1) NO PIPE SHALL EXCEED A DEFLECTION OF 5% 2) USING A RIGID BALL OR MANDREL FOR THE DEFLECTION TEST WITH A DIAMETER NOT LESS THAN 95% OF THE BASE INSIDE DIAMETER OR AVERAGE INSIDE DIAMETER OF THE PIPE, DEPENDING ON WHICH IS SPECIFIED IN THE ASTM SPECIFICATION INCLUDING THE APPENDIX, TO WHICH THE PIPE IS MANUFACTURED, AND 3) PERFORMING THE TEST WITHOUT MECHANICAL PULLING DEVICES.
14.2. LEAKAGE TESTS ARE SPECIFIED REQUIRING THAT: 1) THE LEAKAGE EXFILTRATION OR INFILTRATION DOES NOT EXCEED 100 GALLONS PER INCH OF PIPE DIAMETER PER MILE PER DAY FOR ANY SECTION OF THE SYSTEM; 2) EXFILTRATION OR INFILTRATION TEST BE PERFORMED WITH A MINIMUM POSITIVE HEAD OF 2 FEET; AND 3) AIR TESTS, AS A MINIMUM, CONFORM TO THE TEST PROCEDURE DESCRIBED IN ASTM F-1417 FOR CONCRETE PIPE, ASTM F-1417 FOR PLASTIC PIPE, AND FOR OTHER MATERIALS APPROPRIATE TEST PROCEDURES.
14.3. DESIGN REQUIRES THAT A BENCH BE PROVIDED ON EACH SIDE OF ANY MANHOLE CHANNEL WHEN THE PIPE DIAMETER(S) ARE LESS THAN THE MANHOLE DIAMETER AND THAT NO LATERAL SEWER, SERVICE CONNECTION, OR DROP MANHOLE PIPE DISCHARGES ONTO THE SURFACE OF THE BENCH.
14.4. DESIGN REQUIRES: 1) MANHOLE LIFT HOLES AND GRADE ADJUSTMENT RINGS BE SEALED WITH NON-SHRINK MORTAR OR OTHER APPROPRIATE MATERIAL; 2) INLET AND OUTLET PIPES BE JOINED TO THE MANHOLE WITH A GASKETED FLEXIBLE WATERTIGHT CONNECTION OR ANOTHER WATERTIGHT CONNECTION ARRANGEMENT THAT ALLOWS DIFFERENTIAL SETTLEMENT OF THE PIPE AND MANHOLE WALL; AND 3) WATERTIGHT MANHOLE COVERS BE USED WHERE PER THE MANHOLE TOPS MAY BE FLOODED BY STREET RUNOFF OR HIGH WATERS.
14.5. MANHOLE INSPECTION AND TESTING FOR WATERTIGHTNESS OR DAMAGE PRIOR TO PLACING INTO SERVICE AREA SPECIFIED. AIR TESTING, IF SPECIFIED FOR CONCRETE SEWER MANHOLES, CONFORMS TO THE TEST PROCEDURES DESCRIBED IN ASTM C-1244.
14.6. SUITABLE COUPLINGS APPROVED BY THE ENGINEER AND COMPLYING WITH ASTM SPECIFICATIONS ARE REQUIRED FOR JOINING DISSIMILAR MATERIALS.

15. GENERAL WATER AND SEWER NOTES
15.1. ALL APPLICABLE PERMITS MUST BE OBTAINED AND ALL APPLICABLE FEES AND CHARGES MUST BE PAID PRIOR TO COMMENCEMENT OF CONSTRUCTION.
15.2. A PRE-CONSTRUCTION MEETING SHALL BE HELD WITH CITY OF COOPER CITY ATTENDED BY THE CONTRACTOR, ENGINEER AND OTHER INTERESTED PARTIES PRIOR TO COMMENCEMENT OF CONSTRUCTION.
15.3. THE CONTRACTOR SHALL MAINTAIN AT ALL TIMES ON THE SITE, A CURRENT SET OF APPROVED CONSTRUCTION PLANS. THE PLANS SHALL BE MADE AVAILABLE TO THE MUNICIPALITY'S ENGINEER OR HIS DESIGNEE UPON REQUEST.
15.4. THE CONTRACTOR SHALL FIELD VERIFY THE LOCATIONS OF ALL EXISTING UTILITIES SHOWN ON THE APPROVED PLANS. APPROVAL OF PLANS BY THE MUNICIPALITY IN NO WAY IMPLIES VERIFICATION OF THE ACCURACY OF THOSE PLANS OR FEATURES DEPICTED THEREON. THE OWNER'S ENGINEER SHALL BRING TO THE ATTENTION OF THE MUNICIPALITY'S ENGINEER ANY DISCREPANCY IN, OR VARIATION FROM, THE APPROVED PLANS. THE CONTRACTOR SHALL BE RESPONSIBLE FOR THE PROTECTION OF EXISTING AND NEWLY INSTALLED UTILITIES AND IMPROVEMENTS FROM DAMAGE, DISRUPTION OF SERVICE, OR DESTRUCTION AT ALL TIMES THROUGHOUT THE DURATION OF CONSTRUCTION. THE CONTRACTOR SHALL BE RESPONSIBLE FOR TAKING SUCH MEASURES AS NECESSARY TO PROTECT THE HEALTH, SAFETY AND WELFARE OF THOSE PERSONS HAVING ACCESS TO THE WORK SITE. THE CONTRACTOR SHALL TAKE THE NECESSARY PRECAUTIONS TO SAFEGUARD ALL EXISTING STRUCTURES AND UTILITIES. ADDITIONAL UTILITIES MAY EXIST WHICH ARE NOT SHOWN ON THE PLANS. ANY AND ALL CONFLICTS WITH EXISTING UTILITIES SHALL BE REPORTED TO THE ENGINEER.
15.5. THE CONTRACTOR SHALL INFORM THE MUNICIPALITY'S ENGINEER AT LEAST 48 HOURS IN ADVANCE OF COMMENCING CONSTRUCTION AND/OR CONNECTING TO A MUNICIPAL FACILITY.
15.6. THE CONTRACTOR SHALL BE RESPONSIBLE FOR THE SCHEDULING OF, AND PAYMENT FOR, SUCH TESTS AS MAY BE DEEMED NECESSARY BY THE OWNER'S ENGINEER OR THE MUNICIPAL ENGINEER, AND AS CALLED FOR IN THE PLANS AND SPECIFICATIONS.
15.7. THE OWNER'S ENGINEER SHALL MAKE SUFFICIENT INSPECTIONS OF THE WORK TO ENABLE HIM TO CERTIFY THE INSTALLATION AS BEING IN CONFORMANCE WITH THE APPLICABLE STANDARDS AND SPECIFICATIONS.
15.8. THE OWNER'S REPRESENTATIVE WILL INFORM THE CONTRACTOR WHEN TO BACK FILL THE WORK, AND WILL WITNESS ALL PRESSURE, BACTERIOLOGICAL AND INFILTRATION/EXFILTRATION TESTS.
15.9. SANITARY SEWERS AND FORCE MAINS SHOULD CROSS UNDER WATER MAINS WHENEVER POSSIBLE. SANITARY SEWERS AND FORCE MAINS CROSSING WATER MAINS SHALL BE LAID TO PROVIDE A MINIMUM VERTICAL DISTANCE OF 18 INCHES BETWEEN THE INVERT OF THE UPPER PIPE AND THE CROWN OF THE LOWER PIPE WHENEVER POSSIBLE. WHERE SANITARY SEWERS OR FORCE MAINS MST CROSS A WATER MAIN WITH LESS THAN 18 INCHES VERTICAL DISTANCE, BOTH THE SEWER AND THE WATER MAIN SHALL BE CONSTRUCTED OF DUCTILE IRON PIPE (DIP), MIN. CLASS 52 AT THE CROSSING. SUFFICIENT LENGTHS OF DIP MUST BE USED TO PROVIDE A MINIMUM SEPARATION OF 10 FEET BETWEEN ANY TWO JOINTS. ALL JOINTS ON THE WATER MAIN WITHIN 20 FEET OF THE CROSSING MUST BE MECHANICALLY RESTRAINED. A MINIMUM VERTICAL CLEARANCE OF 12 INCHES MUST BE MAINTAINED AT ALL CROSSINGS. ALL CROSSINGS SHALL BE ARRANGED SO THAT THE SEWER PIPE AND THE WATER MAIN PIPE APPROXIMATELY EQUIDISTANT FROM THE POINT OF CROSSING (PIPES CENTERED ON THE CROSSING). WHERE A NEW PIPE CONFLICTS WITH AN EXISTING PIPE WITH LESS THAN 18 INCHES VERTICAL CLEARANCE, THE PIPE SHALL BE ARRANGED TO MEET THE CROSSING REQUIREMENTS ABOVE.
15.10. A MINIMUM OF 10-FOOT HORIZONTAL SEPARATION SHALL BE MAINTAINED BETWEEN ANY TYPE OF SEWER AND WATER MAIN IN PARALLEL INSTALLATIONS WHENEVER POSSIBLE. IN CASES WHERE IT IS NOT POSSIBLE TO MAINTAIN A 10 FOOT HORIZONTAL SEPAR

LINETYPE & SYMBOLS LEGEND

CLEARING & DEMOLITION LINETYPES	
	EXISTING FENCE (TO BE REMOVED)
	EXISTING CURB (TO BE REMOVED)
	EXISTING WALL (TO BE REMOVED)
	EXISTING TREE LINE/SHRUBS (TO BE REMOVED)
	EXISTING WATER EDGE (TO BE REMOVED)
SWR SWR	EXISTING SANITARY SEWER LINE (TO BE REMOVED)
SSFM SSFM	EXISTING SANITARY SEWER FORCE MAIN LINE (TO BE REMOVED)
STRM STRM	EXISTING STORM DRAINAGE LINE (TO BE REMOVED)
W W W	EXISTING WATER MAIN LINE (TO BE REMOVED)
	EXISTING UTILITY LINE (TO BE ABANDONED)

PROPOSED IMPROVEMENTS LINETYPES & SYMBOLS	
	PROPOSED BASELINE
E E E	PROPOSED BURIED ELECTRIC LINE
	PROPOSED EASEMENT LINE
	PROPOSED FENCE LINE
	PROPOSED GUARDRAIL
	PROPOSED LIMITS OF CONSTRUCTION LINE
PL	PROPERTY BOUNDARY LINE
	PROPOSED LOT LINE
	PROPOSED PROPERTY SETBACK LINE
	PROPOSED EDGE OF PAVEMENT & CURB LINE
	PROPOSED ROADWAY CENTERLINE
R/W	RIGHT OF WAY LINE
	PROPOSED TREE/LANDSCAPE LINE
SSFM SSFM	PROPOSED SANITARY SEWER FORCE MAIN LINE
SL SL SL	PROPOSED SANITARY SEWER SERVICE LATERAL LINE
SWR SWR	PROPOSED SANITARY SEWER LINE
STRM STRM	PROPOSED EXFILTRATION TRENCH LINE
STRM STRM	PROPOSED STORM DRAINAGE LINE
	PROPOSED EDGE OF WATER LINE
	PROPOSED TOP OF BANK LINE
	PROPOSED TOE OF BANK LINE
	PROPOSED WALL LINE
FIRE FIRE	PROPOSED FIRE MAIN LINE
WS WS WS	PROPOSED POTABLE WATER SERVICE LINE
W W W	PROPOSED POTABLE WATER MAIN LINE
RW RW RW	PROPOSED NON-POTABLE RECLAIMED WATER LINE
	PROPOSED AIR RELEASE VALVE
	PROPOSED VALVE
	PROPOSED PLUG WITH BLOWOFF VALVE
	PROPOSED FIRE HYDRANT
	PROPOSED BACKFLOW PREVENTER
	PROPOSED WATER METER
	PROPOSED FIRE DEPARTMENT SIAMESE CONNECTION (FDC)
	PROPOSED DOUBLE DETECTOR CHECK VALVE (DDCV)
S	PROPOSED SANITARY SEWER MANHOLE/CLEANOUT
	PROPOSED STORM DRAINAGE CATCH BASIN
	PROPOSED STORM DRAINAGE MANHOLE
	PROPOSED YARD DRAIN
	PROPOSED MITERED END SECTION
	PROPOSED FDOT TYPE 5 INLET
	PROPOSED FDOT TYPE 6 INLET
	PROPOSED FDOT TYPE 9 INLET
	PROPOSED STORMWATER POLLUTION PREVENETION SILT FENCE
	PROPOSED TURBIDITY BARRIER/CURTAIN
	PROPOSED INLET PROTECTION

EXISTING LINETYPES	
	EXISTING BURIED ELECTRIC LINE
	EXISTING BURIED CABLE/TELEVISION LINE
	EXISTING BURIED COMMUNICATION LINE
	EXISTING FIRE LINE
	EXISTING GAS LINE
	EXISTING NON-POTABLE RECLAIMED WATER LINE
	EXISTING OVERHEAD WIRE LINE
	EXISTING ABANDONED UTILITY LINE
	EXISTING SANITARY FORCE MAIN
	EXISTING SANITARY SEWER LATERAL
	EXISTING SANITARY SEWER LINE
	EXISTING STORM SEWER LINE
	EXISTING POTABLE WATER LINE
	EXISTING POTABLE WATER SERVICE LINE

GENERAL ABBREVIATIONS

AC	ASBESTOS CEMENT
ALUM	ALUMINUM
ARV	AIR RELEASE VALVE
BE	BURIED ELECTRIC
BFP	BACKFLOW PREVENTER
BFV	BUTTERFLY VALVE
B/L	BASELINE
BOP	BOTTOM OF PIPE
BSP	BACTERIOLOGICAL SAMPLE POINT
BT	BURIED TELEPHONE
CATV	CABLE TELEVISION
CB	CATCH BASIN
CIP	CAST IRON PIPE
℄	CENTERLINE
CONC	CONCRETE
CV	CHECK VALVE
DDCV	DOUBLE DETECTOR CHECK VALVE
DIA	DIAMETER
DIP	DUCTILE IRON PIPE
ELEV	ELEVATION
EP	EXISTING PAVEMENT EDGE
EXIST	EXISTING
F&I	FURNISH & INSTALL
FDEP	FLORIDA DEPT. OF ENVIRONMENTAL PROTECTION
FDOT	FLORIDA DEPT. OF TRANSPORTATION
FH	FIRE HYDRANT
FM	FORCE MAIN
FPL	FLORIDA POWER & LIGHT
GE	GRATE ELEVATION
GV	GATE VALVE
HDPE	HIGH DENSITY POLYETHYLENE
IE	INVERT ELEVATION
LAT	LATERAL
LF	LINEAR FEET

GENERAL ABBREVIATIONS

MAX	MAXIMUM
MEG	MATCH EXISTING GRADE
MES	MITERED END SECTION
MFGR	MANUFACTURER
MH	MANHOLE
MIN	MINIMUM
MJ	MECHANICAL JOINT
NTS	NOT TO SCALE
OC	ON CENTER
OE	OVERHEAD ELECTRIC
OHW	OVERHEAD WIRE
PC	POINT OF CURVATURE
PHDPE	PERFORATED HIGH DENSITY POLYETHYLENE
℄	PROPERTY LINE
PRB	POLLUTION RETARDANT BAFFLE
PROP	PROPOSED
PSI	POUNDS PER SQUARE INCH
PV	PLUG VALVE
PVC	POLY VINYL CHLORIDE
RCP	REINFORCED CONCRETE PIPE
RE	RIM ELEVATION
RED	REDUCER
REQD	REQUIRED
RJ	RESTRAINED JOINT
R/W	RIGHT-OF-WAY
SAN SWR	SANITARY SEWER
STRM SWR	STORM SEWER
TEL	TELEPHONE
TOP	TOP OF PIPE
TYP	TYPICAL
UR	UTILITY RISER
VCP	VITRIFIED CLAY PIPE
WL	WATER LINE
WM	WATER METER

EXISTING SYMBOLS LEGEND

	SYM.	DESCRIPTION
CONTROL		AERIAL TARGET
		BENCH MARK
		CONCRETE MONUMENT
		IRON PIN
		NAIL & DISC
		IRON ROD AND CAP
		HUB AND TACK
PIPE FITTINGS		11.25° PIPE BEND
		22.5° PIPE BEND
		45° PIPE BEND
		90° PIPE BEND
		CROSS PIPE FITTING
		TEE PIPE FITTING
		WYE PIPE FITTING
		REDUCER PIPE FITTING
ELECTRICAL		ELECTRICAL MANHOLE
		ELECTRICAL OUTLET
		GROUND LIGHT
		ELECTRICAL JUNCTION BOX
		ELECTRICAL METER
		TRANSFORMER

	SYM.	DESCRIPTION
GAS / FUEL		GAS MANHOLE
		GAS VALVE
		MONITORING WELL
		VENT PIPE
TELE / TV		TELEPHONE RISER
		TELEPHONE MANHOLE
		CATV RISER
WATER / IRRIGATION		BACKFLOW PREVENTER
		AIR RELEASE VALVE
		FIRE HYDRANT
		SIAMESE CONNECTION
		WATER METER
		WATER VALVE
		DOUBLE DETECTOR CHECK VALVE
		WELL
		IRRIGATION CONTROL VALVE
		IRRIGATION CONTROL BOX
		SPRINKLER
TREES		GENERIC TREE
		OAK TREE
		PALM TREE
		MANGROVE TREE
		CITRUS TREE
		BUSH-CROTON

	SYM.	DESCRIPTION
SANITARY SEWER		CLEAN OUT
		SANITARY MANHOLE
		STAND PIPE
		SEWER VALVE
		GREASE TRAP MANHOLE
STORM SEWER		CATCH BASIN
		STORM MANHOLE
		YARD DRAIN
		CURB INLET
MISCELLANEOUS		BORING HOLE LOCATION
		VALVE (UNKNOWN)
		BOLLARD
		FLAG POLE
		MANHOLE (UNKNOWN)
		SATELLITE DISH
		SIGNS
		PARKING METER
		A/C UNIT
		MAILBOX
		PEDESTRIAN SIGNAL UNIT
		TRASH RECEPTICLE
		TOPOGRAPHIC ELEVATION
UTILITY POLES		GUY WIRE
		GUY POLE
		WOOD LIGHT POLE
		METAL LIGHT POLE
		CONCRETE LIGHT POLE
		CONCRETE UTILITY POLE
		METAL UTILITY POLE
		WOOD UTILITY POLE
		MAST ARM & SIGNAL SUPPORT

TAGS

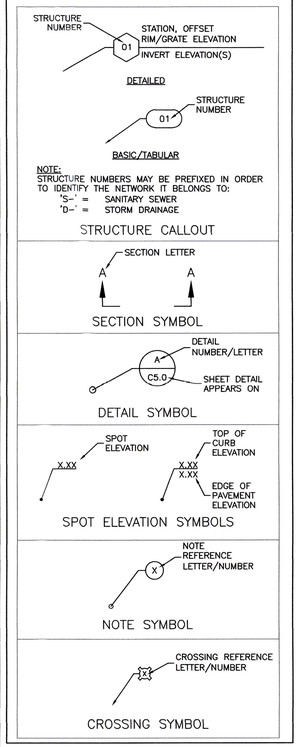

HATCH PATTERN LEGEND

EXISTING HATCH PATTERNS	
	EXISTING CONCRETE PAVEMENT/SIDEWALK
	EXISTING CONCRETE PAVERS

CLEARING & DEMOLITION HATCH PATTERNS	
	EXISTING BUILDING/STRUCTURE (TO BE REMOVED)
	EXISTING ASPHALT ROADWAY/SURFACE (TO BE REMOVED)
	EXISTING CONCRETE SIDEWALK/SURFACE (TO BE REMOVED)

PROPOSED IMPROVEMENTS HATCH PATTERNS	
	PROPOSED CONCRETE PAVEMENT/SIDEWALK
	PROPOSED ASPHALT PAVEMENT
	PROPOSED ASPHALT RESTORATION
	PROPOSED CONCRETE PAVERS
	PROPOSED GREEN SPACE
	PROPOSED STORMWATER POLLUTION PREVENTION SOIL TRACKING MEASURE/ GRAVEL CONSTRUCTION ENTRANCE

SINGLE LINE PIPE FITTING LEGEND

11.25° BEND		CROSS	
22.5° BEND		REDUCER	
45° BEND		TEE	
90° BEND		WYE	

LINE WEIGHTS

	SHADED SOLID & DASHED LINES & TEXT DENOTE EXISTING EQUIPMENT, STRUCTURES AND WORK.
FUTURE	NON-SHADED DASHED LINES & TEXT DENOTE FUTURE EQUIPMENT, STRUCTURES AND WORK.
PROPOSED	NON-SHADED, BOLD, SOLID LINES & TEXT DENOTE PROPOSED EQUIPMENT, STRUCTURES AND WORK.

NOTES:
1. FOR GRAPHICAL CLARIFICATION ON PLANS CONTAINING BACKGROUND AERIAL PHOTOS, EXISTING ITEMS ARE SHOWN HOLLOW WHEREAS PROPOSED ARE SHOWN SOLID.
2. FOR GRAPHICAL CLARIFICATION THROUGHOUT THE PLAN SET, PROPOSED EQUIPMENT, STRUCTURES AND WORK NOT PERTAINING TO A SUB-SECTION OF THE SET (i.e. PAVEMENT MARKING & SIGNAGE PLAN, PAVING GRADING & DRAINAGE PLAN, UTILITY PLAN, ETC.) MAY BE SHADED IN AN EFFORT TO EMPHASIZE PROPOSED EQUIPMENT, STRUCTURES AND WORK ASSOCIATED WITH THE SUB-SECTION IN A MANNER OF DISTINCT DIFFERENTIATION FROM THAT OF EXISTING EQUIPMENT, STRUCTURES, AND UTILITIES. IT IS THE CONTRACTOR'S RESPONSIBILITY TO REVIEW AND VERIFY EXISTING CONDITIONS, AS WELL AS MAINTAIN KNOWLEDGE AND UNDERSTANDING OF THE PROPOSED WORK SPECIFIED WITHIN THE CONSTRUCTION SET.

PIPE & STRUCTURE LEGEND

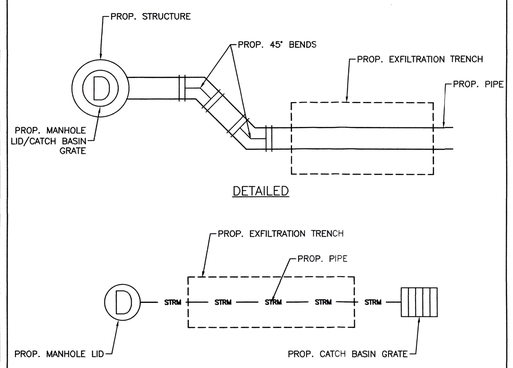

NOTE:
THE LEGEND SHOWN HEREON IS REPRESENTATIVE OF ALL MILLER LEGG DRAFTING STANDARDS AND IS NOT PROJECT SPECIFIC.

811 SAFETY IS IN YOUR HANDS. EVERY DIG. EVERY TIME.

JOAQUIN A. MOJICA LICENSE No. 60488 STATE OF FLORIDA PROFESSIONAL ENGINEER

APPROVED : JOAQUIN A. MOJICA, P.E.
FLA. REGISTRATION NO. 60488 DATE : 10/24/2025

NO.	DATE	REVISIONS
1	7/22/24	REV. PER DRC COMMENTS
	5/10/24	REVIEW SET

SUN CREDIT UNION

COOPER CITY, FLORIDA
FOR: SUN CREDIT UNION

CIVIL LEGEND, ABBREVIATIONS, & SYMBOLS

MILLER LEGG
South Florida Office: 13680 NW 5th Street, Suite 200
Sunrise, Florida : 33325
954-436-7000
www.millerlegg.com

CERTIFICATE OF AUTHORIZATION: LB6680

DES.	DRWN.	CHK.

PROJECT / FILE NO. 23-00434
DRAWING NO. C1.1
DATE DRAWN: 10/24/25

V:\ PROJECTS \2023 \23-00434 - SUN CREDIT UNION \DRAWINGS \ 23-00434_CVR.DWG by MDRINBANK 10/24/2025 6:59:14 AM

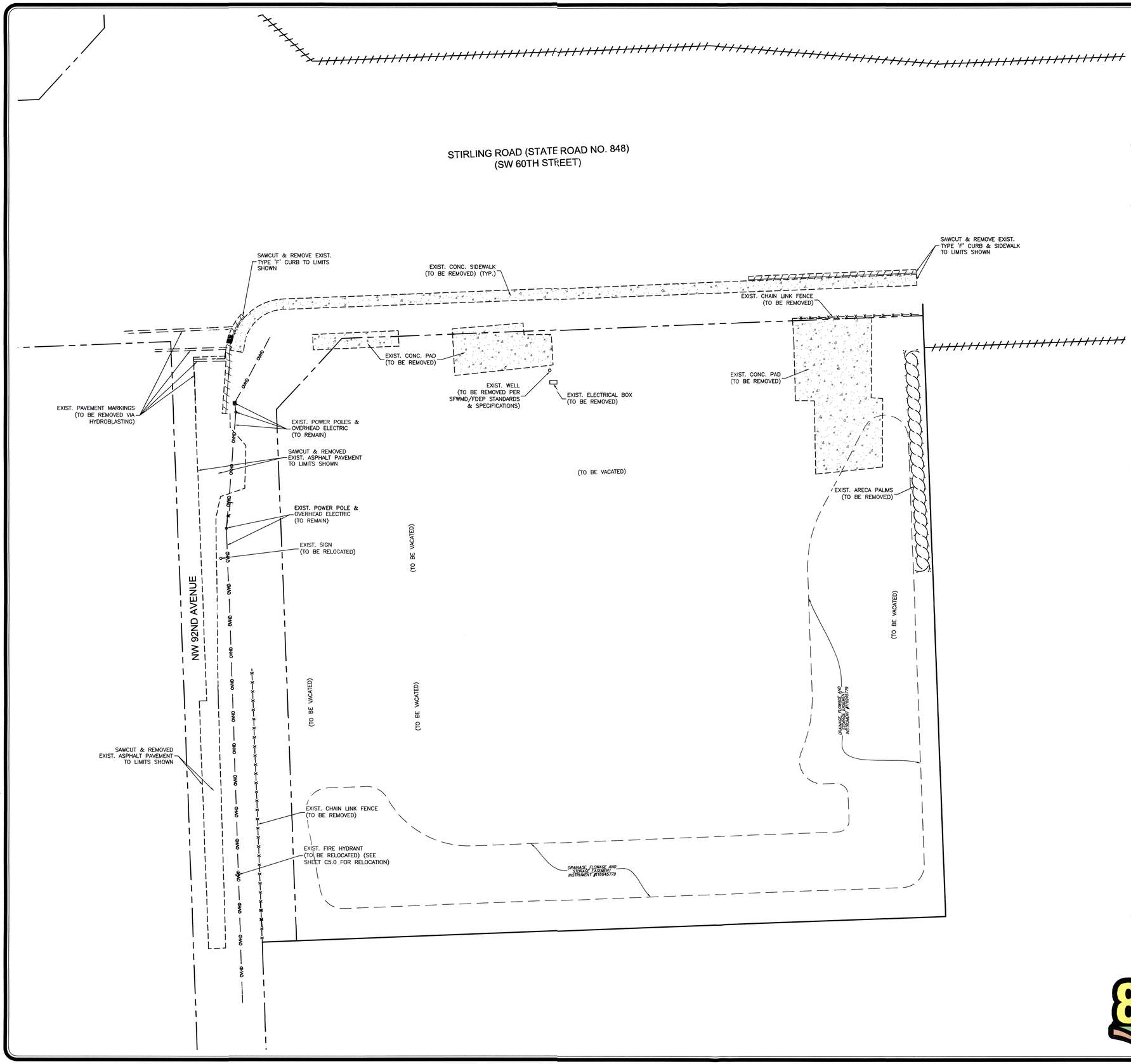

GRAPHIC SCALE

0 10 20 40

(IN FEET)
1 INCH = 20 FEET

CLEARING & DEMOLITION NOTES:

1. CONTRACTOR TO VERIFY LOCATION OF ALL EXISTING UTILITIES.
2. IT SHALL BE THE CONTRACTOR'S SOLE RESPONSIBILITY TO TAKE THE NECESSARY PRECAUTIONS TO ENSURE PROPER SAFETY AND WORKMANSHIP WHEN WORKING IN THE VICINITY OF EXISTING UTILITY LINES.
3. CONTRACTOR SHALL BE RESPONSIBLE TO COORDINATE WITH FPL ON ANY WORK IN THE VICINITY OF OVERHEAD OR UNDERGROUND POWER LINES.
4. CONTRACTOR SHALL VERIFY PROPER CLEARANCE BELOW EXISTING OVERHEAD POWER LINES PRIOR TO WORKING WITHIN THE VICINITY OF POWER LINES.
5. IT IS THE CONTRACTOR'S RESPONSIBILITY TO IDENTIFY, REMOVE AND/OR RELOCATE ANY ABOVE OR BELOW GROUND STRUCTURES OR SERVICES THAT IMPACT THIS PROJECT. THIS MAY REQUIRE NEW SERVICE TIE-INS TO EXISTING SOURCES.
6. PRIOR TO COMMENCEMENT OF DEMOLITION THE CONTRACTOR WILL COORDINATE HIS ACTIVITIES WITH ALL THE UTILITY COMPANIES SERVING THIS AREA. CONTRACTOR IS TO COORDINATE FULLY WITH UTILITY COMPANIES ON EXACT LOCATION OF UNDERGROUND UTILITIES PRIOR TO EXCAVATION.
7. THE CONTRACTOR IS TO COMPLETELY REMOVE AND DISPOSE OF ALL STRUCTURES AND BUILDINGS THAT IS SO INDICATED INCLUDING FOUNDATIONS, TIMBER AND BRUSH, EXCEPT AS OTHERWISE INDICATED; STUMPS AND ROOTS; EXISTING PAVEMENT; OTHER STRUCTURES AS SHOWN OR REASONABLY IMPLIED IN THE DRAWINGS.
8. EXCEPT IN AREAS WHERE EXISTING TREES SHALL BE PRESERVED, A MINIMUM DEPTH OF REMOVAL SHALL BE (2) FOOT BELOW SUBGRADE IN ROADWAY AREAS AND TO ORIGINAL SOILS ELSEWHERE. WHERE EXISTING BUILDINGS ARE TO BE DEMOLISHED, ALL TRACES OF FOUNDATIONS AND UNDERGROUND UTILITIES ARE TO BE REMOVED (UNLESS OTHERWISE NOTED ON PLANS). THE CONTRACTOR IS RESPONSIBLE FOR PROPER DISPOSAL OF ALL WASTE MATERIAL.
9. WHERE PAVING OR STRUCTURES ARE TO BE REMOVED WHICH ABUT OR ARE A PART OF CONNECTED FACILITIES (THAT ARE OFF-SITE), RESTORATION OF ANY DAMAGE THAT MIGHT RESULT FROM DEMOLITION IS TO BE RESTORED TO A CONDITION EQUAL TO OR BETTER THAN EXISTING UNLESS SPECIFICALLY EXEMPTED BY THE PLANS. THE COST FOR SUCH RESTORATION SHALL BE INCIDENTAL TO OTHER CONSTRUCTION AND NO EXTRA COMPENSATION WILL BE ALLOWED.
10. THE LOCATION OF ALL EXISTING UTILITIES, STORM DRAINAGE AND TREES SHOWN ON THE PLANS HAVE BEEN DETERMINED FROM AVAILABLE INFORMATION AND IS GIVEN FOR THE CONVENIENCE OF THE CONTRACTOR. THE OWNER OR ENGINEER ASSUMES NO RESPONSIBILITY FOR ACCURACY. PRIOR TO THE START OF DEMOLITION THE CONTRACTOR SHALL VISIT THE SITE AND DETERMINE THE EXISTANCE & LOCATION OF ALL STRUCTURES, UTILITIES & TREES SHOWN OR NOT ON THE PLANS, WHICH WOULD NEED TO BE REMOVED OR PRESERVED.
11. THE CONTRACTOR IS TO COORDINATE THE RELOCATION OR REMOVAL OF IMPACTED OVERHEAD/UNDERGROUND UTILITIES, UTILITY POLES, LIGHTS AND LINES IN THE RIGHT-OF-WAY AND ON THE PROPERTY WITH THE APPROPRIATE SERVICE PROVIDER.
12. THE CONTRACTOR SHALL REFERENCE AND RESTORE PROPERTY CORNERS AND LAND MARKERS DISTURBED DURING CONSTRUCTION. (UNDER THE DIRECTION OF AN FLORIDA REGISTERED LAND SURVEYOR).
13. ALL DISTURBED AREAS OUTSIDE THE PROJECT AREA MUST BE RESTORED PRIOR TO FINAL ACCEPTANCE.
14. CONTRACTOR TO PROVIDE A CLEAN SAWCUT LINE AT ALL EDGES OF REMOVAL FOR PAVEMENT. SIDEWALKS, GUTTER AND/OR OTHER CONCRETE SURFACES.
15. CONTRACTOR SHALL OBTAIN A COPY OF THE SITE GEOTECHNICAL REPORT AND ADHERE TO ALL REQUIREMENTS CONTAINED THEREIN.
16. CONTRACTOR SHALL OBTAIN A COPY OF THE GEOTECHNICAL REPORT AND INCLUDE ALL NECESSARY SOIL WORK IN THE PROJECT BID.
17. ALL EROSION AND SEDIMENT CONTROL WORK SHALL CONFORM WITH LOCAL CITY/COUNTY/STATE SPECIFICATIONS, SUBJECT TO AUTHORIZED AND APPROVED VARIANCES, WAIVERS AND/OR CONDITIONS OF SITE PERMITS.
18. EROSION AND SEDIMENT CONTROL MEASURES SHALL BE PLACED PRIOR TO OR AS THE FIRST STEP IN, CONSTRUCTION. SEDIMENT CONTROL PRACTICES WILL BE APPLIED AS A PERIMETER DEFENSE AGAINST ANY TRANSPORTATION OF SILT OFF THE SITE.
19. ALL AREAS AFFECTED BY THIS WORK SHALL BE RESTORED TO A CONDITION EQUAL TO OR BETTER THAN EXISTING CONDITION, UNLESS SPECIFICALLY EXEMPTED BY THE PLANS. THE COST FOR SUCH RESTORATION SHALL BE INCIDENTAL TO OTHER CONSTRUCTION AND NO ADDITIONAL COMPENSATION SHALL BE ALLOWED.
20. THE CONTRACTOR SHALL IMMEDIATELY NOTIFY THE ENGINEER OF ANY DISCREPANCIES BETWEEN THESE PLANS AND FIELD CONDITIONS PRIOR TO CONSTRUCTION.
21. CONTRACTOR SHALL KEEP ANY AND ALL SAND, SILT OR OTHER DEBRIS FROM MOVING OFF-SITE.
22. CONTRACTOR SHALL BLOCK INTRUSION OF SAND, SILT OR OTHER DEBRIS INTO ANY DRAINAGE OR SANITARY SEWER STRUCTURE OR PIPING ON OR ADJACENT TO SITE.
23. FILTER FABRIC MUST BE INSTALLED UNDER ALL INLET GRATES, AT ALL TIMES WHEN INLETS ARE NOT PROTECTED BY SILT FENCE OR SYNTHETIC BALES, UNTIL THE LIMEROCK BASE IS FINISHED AND PRIMED.
24. NON STORMWATER DISCHARGES SUCH AS FIRE HYDRANT FLUSHING, ETC SHALL BE DISCHARGED TO EXISTING UNDERGROUND STORMWATER FACILITY.
25. ANY POTENTIALLY HAZARDOUS CHEMICALS BROUGHT ONTO THE JOB SITE WILL BE LIMITED AND KEPT IN ORIGINAL CONTAINER WITH MSDS LABEL.
26. NO SILT SHALL BE TRACKED ONTO PUBLIC ROADWAYS. ANY SILT DEPOSITED ON PUBLIC ROADWAYS SHALL BE REMOVED BY THE END OF THE WORK DAY.
27. TREES AND NON-CIVIL UTILITY LINES SUCH AS CATV, COMMUNICATIONS, ELECTRICAL, AND GAS ARE SHOWN BASED ON BEST AVAILABLE INFORMATION FOR THE CONVENIENCE OF THE CONTRACTOR. INFORMATION REGARDING THE SPECIFIC LIMITS AND PROCEDURES FOR REMOVAL AND/OR RELOCATION OF TREES AND NON-CIVIL UTILITIES SHALL BE COORDINATED BY THE CONTRACTOR, THE DESIGN CONSULTANT FOR THAT SCOPE OF WORK, AND THE APPLICABLE UTILITY COMPANY. DEMOLITION, REMOVAL/RELOCATION PLANS PRODUCED BY OTHER CONSULTANTS FOR THOSE SPECIFIC ITEMS SHALL SUPERSEED THE INFORMATION SHOWN ON THESE PLANS.
28. THE CONTRACTOR IS ADVISED THAT PROPERTIES ADJACENT TO THE PROJECT HAVE ELECTRIC, TELEPHONE, GAS, WATER, AND/OR SEWER SERVICE LATERALS WHICH MAY NOT BE SHOWN IN PLANS. THE CONTRACTOR MUST REQUEST THE LOCATION OF THESE LATERAL SERVICES FROM THE UTILITY COMPANIES. THE ADDITIONAL COST OF EXCAVATING, INSTALLING, BACKFILLING, AND COMPACTING AROUND THESE LATERAL SERVICES MUST BE INCLUDED IN THE BID RELATED ITEM FOR THE WORK BEING DONE.
29. CLEARING AND GRUBBING, GRADING AND OTHER INCIDENTAL WORK NECESSARY FOR HARMONIZATION OUTSIDE R/W SHALL BE INCLUDED IN RELATED BID ITEMS.
30. ALL DISPOSAL OF MATERIALS, RUBBISH, AND DEBRIS SHALL BE MADE AT A LEGAL DISPOSAL SITE OR BY OTHER PRIOR APPROVED MANNER. MATERIAL CLEARED FROM THE SITE AND DEPOSITED ON ADJACENT OR NEARBY PROPERTY WILL NOT BE CONSIDERED AS HAVING BEEN DISPOSED OF SATISFACTORILY.
31. CONTRACTOR TO RELOCATE TREES AS DIRECTED BY THE LANDSCAPE ARCHITECT. CONTRACTOR SHALL AVOID DAMAGE TO ANY EXISTING TREES TO REMAIN. EXISTING TREES SHALL BE REMOVED ONLY IF REQUIRED FOR CONSTRUCTION. THOSE TREES NOT INTERFERING WITH CONSTRUCTION SHALL BE PROTECTED IN PLACE.
32. CONTRACTOR SHALL ENSURE APPROPRIATE EROSION CONTROL DEVICES ARE IN PLACE BEFORE ANY CONSTRUCTION BEGINS AND ARE USED THROUGHOUT THE DURATION OF CONSTRUCTION.
33. CONTRACTOR SHALL ALWAYS PROVIDE AND MAINTAIN SAFE ACCESS TO ALL ADJACENT PROPERTIES AND SHALL MAINTAIN ACCOMMODATIONS FOR INTERSECTING & CROSSING TRAFFIC WITHIN THE CONSTRUCTION ZONE.
34. PEDESTRIAN CONTROL FOR SIDEWALK CLOSURES SHALL BE IN ACCORDANCE WITH THE FDOT ROADWAY AND TRAFFIC STANDARD INDEX 102-660.

SURVEY DATUM NOTE:

ELEVATIONS SHOWN ON THE PLANS ARE BASED ON THE NORTH AMERICAN VERTICAL DATUM OF 1988 (NAVD 88') OBTAINED FROM THE SURVEY PERFORMED BY PULICE LAND SURVEYORS, INC. (PROJECT #69199), LAST REVISION DATED 12/14/21, RECEIVED 03-08-24.

811 SAFETY IS IN YOUR HANDS. EVERY DIG. EVERY TIME.

JOAQUIN A. MOJICA LICENSE No. 60488 STATE OF FLORIDA PROFESSIONAL ENGINEER

APPROVED : JOAQUIN A. MOJICA, P.E.
FLA. REGISTRATION NO. 60488 DATE : 10/24/2025

NO	DATE	REVISIONS	BY
1	7/22/24	REV. PER DRC COMMENTS	
	5/10/24	REVIEW SET	

SUN CREDIT UNION

COOPER CITY, FLORIDA
FOR: SUN CREDIT UNION

MILLER LEGG
South Florida Office: 13680 NW 5th Street, Suite 200
Sunrise, FL 33325
954.438.7000
www.millerlegg.com

CERTIFICATE OF AUTHORIZATION: LB6680

DES.	DRWN.	CHK.

PROJECT / FILE NO.: 23-00434

DRAWING NO.: C2.0

DATE DRAWN: 7/22/24

SITE CLEARING & DEMOLITION PLAN

V:_PROJECTS\2023\23-00434 - SUN CREDIT UNION\DRAWINGS\23-00434_DEMO.DWG by MDUNSHEE 12/12/2024 3:01:46 PM

V:\PROJECTS\2023\23-00434 - SUN CREDIT UNION\DRAWINGS\23-00434_GEO.DWG by MGRINBANK 3/27/2025 2:25:38 PM

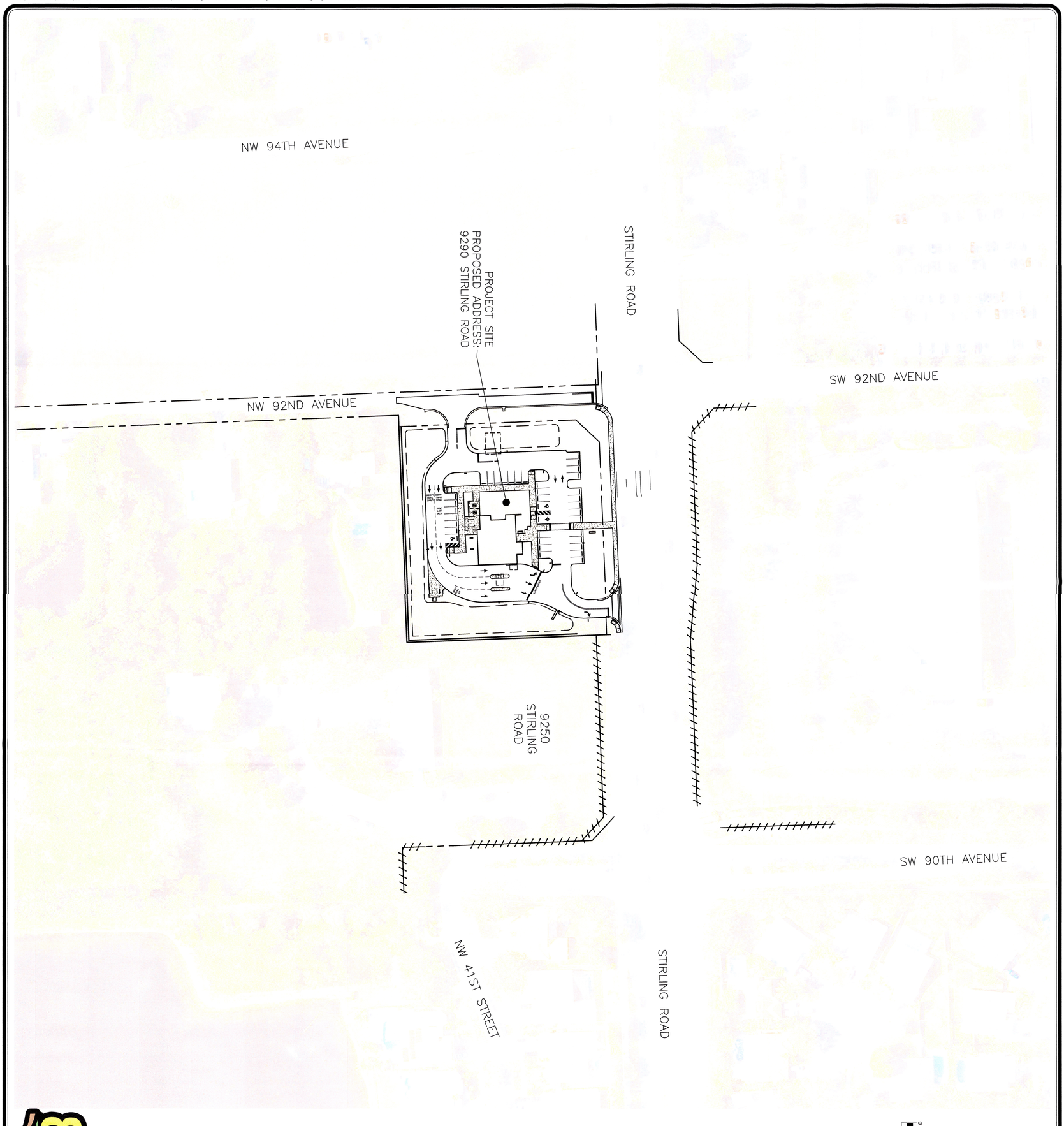

811

SAFETY IS IN YOUR HANDS.
EVERY DIG. EVERY TIME.

APPROVED: JOAQUIN A. MOJICA, P.E.
FLA. REGISTRATION NO. 60488 DATE: 10/24/2025

JOAQUIN A. MOJICA
LICENSE
No. 60488
STATE OF
FLORIDA
PROFESSIONAL ENGINEER

SITE ADDRESSING PLAN

DESIGNATE OF AUTHORIZATION	LB6680
DES	DRWN
CHK	
PROJECT FILE NO.	23-00434
DRAWING NO.	C3.0
DATE DRAWN	2/7/25

MILLER LEGG
South Florida Office: 13680 NW 5th Street, Suite 200
Sunrise, Florida · 33325
954-436-7000
www.millerlegg.com

SUN CREDIT UNION

COOPER CITY, FLORIDA
FOR: SUN CREDIT UNION

NO.	DATE	REVISIONS	DSN	DWN
1	7/22/24	REV. PER DRC COMMENTS		
	5/10/24	REVIEW SET		

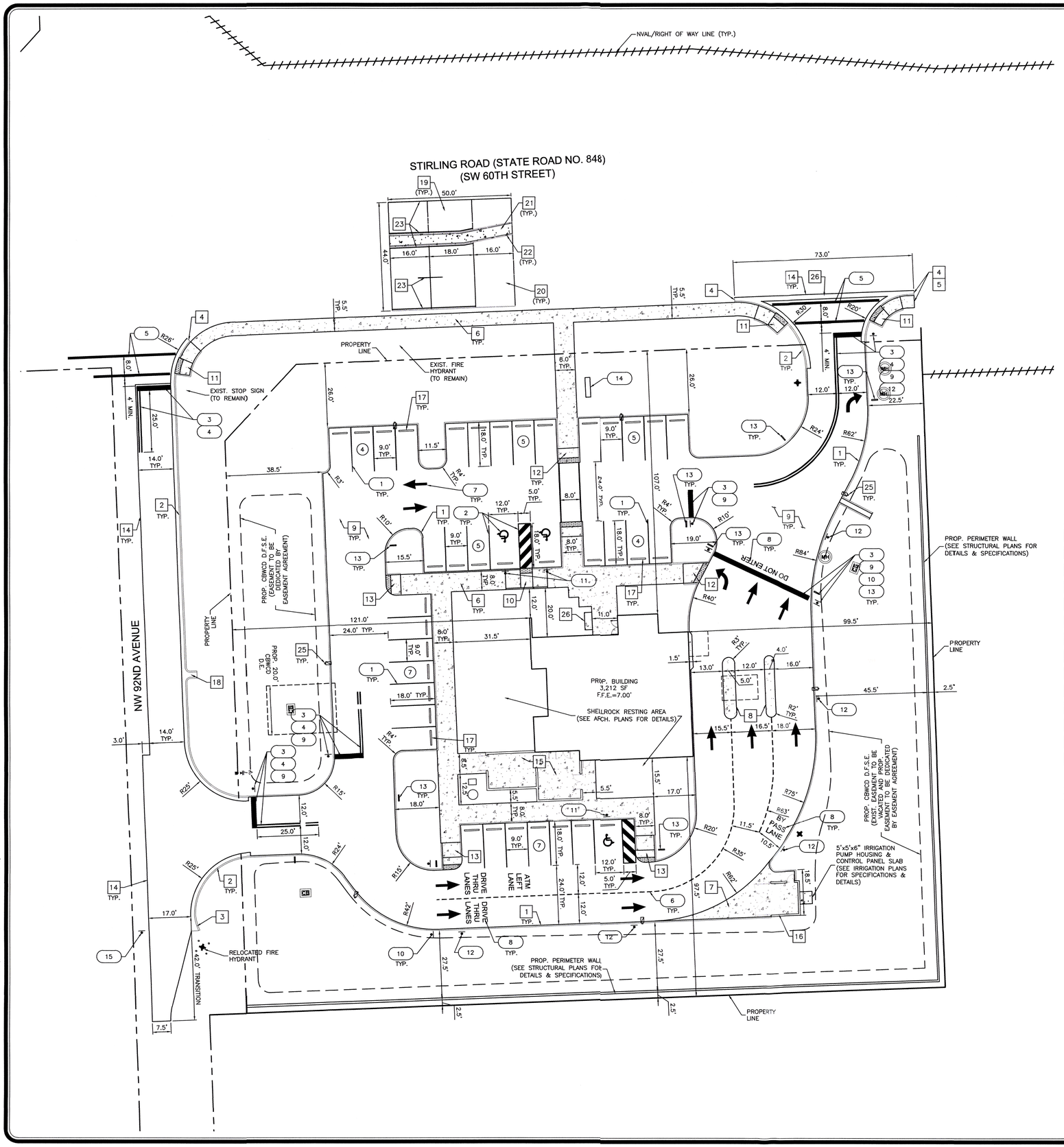

SIGNAGE AND MARKING NOTES:

1. ALL STOP BARS AND TRAFFIC CONTROL STRIPING SHALL BE THERMOPLASTIC. ALL OTHER STRIPING SHALL BE PAINTED UNLESS OTHERWISE SPECIFIED.
2. ALL PAINT USED FOR PAVEMENT MARKINGS SHALL CONFORM TO SECTION 971-13 OF THE FDOT STANDARD SPECIFICATIONS FOR ROAD AND BRIDGE CONSTRUCTION, LATEST EDITION (SSRBC). ALL PAINTED MARKINGS SHALL BE APPLIED IN ACCORDANCE WITH SECTION 710 OF THE FDOT SSRBC AND THE MANUAL FOR UNIFORM TRAFFIC CONTROL DEVICES (MUTCD). PAINT MAY ONLY BE USED FOR PRIVATE DEVELOPMENT IMPROVEMENTS OR AS TEMPORARY MARKINGS.
3. THERMOPLASTIC TRAFFIC MARKINGS SHALL CONFORM TO SECTION 711-2 OF THE FDOT SSRBC. ONLY ALKYD BASED MATERIALS SHALL BE USED. THERMOPLASTIC TRAFFIC MARKINGS SHALL BE APPLIED IN ACCORDANCE WITH SECTION 711 OF THE FDOT SSRBC AND THE MUTCD.
4. ALL REFLECTIVE PAVEMENT MARKINGS SHALL BE INSTALLED IN CONFORMANCE WITH SECTION 706 OF THE FDOT SSRBC.
5. ALL TRAFFIC SIGNS SHALL USE TYPE XI SHEETING AND BE "STANDARD" SIZE AS ESTABLISHED IN THE MUTCD.
6. BLUE REFLECTIVE PAVEMENT MARKERS SHALL BE PLACED OPPOSITE FIRE HYDRANTS IN THE CENTER OF THE NEAREST TRAVELED LANE TO MARK THEIR LOCATIONS.
7. STOP BARS TO BE A MINIMUM OF 4 FEET CLEAR BEHIND CROSSWALKS EDGE OF INTERSECTING TRAVEL LANE OR DRIVE AISLE.
8. HANDICAP PARKING SPACES SHALL BE DESIGNATED BY APPROPRIATE PAVEMENT MARKINGS AND SIGNS.
9. ALL PAVEMENT MARKINGS, REFLECTIVE PAVEMENT MARKERS, THERMOPLASTIC AND GEOMETRICS SHALL BE IN ACCORDANCE WITH THE MANUAL ON UNIFORM TRAFFIC CONTROL SERVICES, THE ROADWAY & TRAFFIC DESIGN STANDARDS. (F.D.O.T.).
10. ALL SIGNAGE AND PAVEMENT MARKINGS AND THEIR CONSTRUCTION SHALL CONFORM TO THE MANUAL ON UNIFORM TRAFFIC CONTROL DEVICES AND BROWARD COUNTY TRAFFIC ENGINEERING STANDARDS (LATEST EDITION).
11. THE CONTRACTOR SHALL TAKE PRECAUTION NOT TO DAMAGE EXISTING LANDSCAPING. IF EXISTING LANDSCAPING IS IN CONFLICT WITH PROPOSED WORK THE CONTRACTOR SHALL NOTIFY THE OWNER AND ENGINEER OF SAID CONFLICT.
12. ALL CONSTRUCTION SHALL BE IN STRICT ACCORDANCE WITH THE REQUIREMENTS OF THE CITY OF COOPER CITY PUBLIC WORKS DEPARTMENT, AND ANY OTHER STATE OR LOCAL AGENCY WITH JURISDICTION. IT IS THE INTENT OF THESE PLANS TO BE IN ACCORDANCE WITH APPLICABLE CODES AND AUTHORITIES HAVING JURISDICTION. ANY DISCREPANCIES BETWEEN THESE PLANS AND APPLICABLE CODES SHALL BE IMMEDIATELY BROUGHT TO THE ATTENTION OF THE ENGINEER.
13. CONTRACTOR SHALL COMPLY WITH THE REQUIREMENTS OF THE EPA AND THE NATIONAL POLLUTION DISCHARGE ELIMINATION SYSTEM (NPDES).

CONSTRUCTION CALLOUTS:

1. PROP. TYPE 'D' CURB
2. PROP. TYPE 'F' CURB & GUTTER
3. PROP. TYPE 'F' CURB & GUTTER FLARED END PER FDOT INDEX No. 520-001
4. CONNECT TO EXIST. CONC. CURB
5. CONNECT TO EXIST. CONC. SIDEWALK
6. PROP. CONC. SIDEWALK
7. PROP. REINFORCED CONC. PAVEMENT
8. PROP. RAISED CONC. MEDIAN
9. PROP. ASPHALT PAVEMENT
10. PROP. FDOT TYPE CR-C CURB RAMP W/ DETECTABLE WARNING SURFACE PER FDOT INDEX No. 522-002
11. PROP. FDOT TYPE CR-D CURB RAMP W/ DETECTABLE WARNING SURFACE PER FDOT INDEX No. 522-002
12. PROP. FDOT TYPE CR-E CURB RAMP W/ DETECTABLE WARNING SURFACE PER FDOT INDEX No. 522-002
13. PROP. FDOT TYPE CR-G CURB RAMP W/ DETECTABLE WARNING SURFACE PER FDOT INDEX No. 522-002
14. CONNECT TO EXIST. ASPHALT PAVEMENT
15. PROP. MECHANICAL ENCLOSURE (SEE ARCH. PLANS FOR DETAILS & SPECIFICATIONS)
16. PROP. DUMPSTER ENCLOSURE (SEE ARCH. PLANS FOR DETAILS & SPECIFICATIONS)
17. PROP. 6' CONC. WHEEL STOP
18. PROP. CONC. FLUME
19. ASPHALT RESTORATION PER FDOT INDEX 105-001 – APPROXIMATELY 800 SF 1.25" FC-9.5 FC, 2.0" SP-9.5 SC AND 12" TYPE B STABILIZATION (LBR 40)
20. MILL & RESURFACE PER FDOT INDEX 105-001 – APPROXIMATELY 1,400 SF 1.25" FC-9.5 FC
21. RESTORE APPROXIMATELY 250 SF OF CONCRETE MEDIAN PER FDOT INDEX 520-020
22. RESTORE APPROXIMATELY 100 LF OF TYPE 'F' CURB & GUTTER PER FDOT INDEX 520-001
23. RESTORE 6" SOLID WHITE THERMOPLASTIC PER FDOT INDEX 711-001
24. RESTORE 6" SOLID YELLOW THERMOPLASTIC PER FDOT INDEX 711-001
25. PROP. LIGHT POLE (SEE LIGHTING PLANS FOR DETAILS AND SPECIFICATIONS)
26. PROP. 2' VALLEY GUTTER

SIGNAGE & MARKING CALLOUTS:

1. PROP. 4" SOLID WHITE PARKING STRIPING
2. PROP. 4" SOLID BLUE HANDICAP PARKING STRIPING
3. PROP. 24" SOLID WHITE STOP BAR
4. PROP. 6" SOLID DOUBLE YELLOW STRIPING W/ AMBER/AMBER R.P.M.'S @ 20' O.C.
5. PROP. 12" SOLID WHITE CROSSWALK STRIPING
6. PROP. 4" SOLID WHITE 2'-4' SKIP STRIPING
7. PROP. SOLID WHITE DIRECTIONAL PAVEMENT MARKING
8. PROP. SOLID WHITE TEXT PAVEMENT MARKING
9. PROP. R1-1 'STOP' SIGN
10. PROP. R5-1 'DO NOT ENTER' SIGN
11. PROP. FTP-20-06 & FTP-22-06 HANDICAP PARKING SIGN
12. PROP. 12"x18" 'NO PARKING FIRE LANE BY ORDER OF THE FIRE DEPARTMENT' SIGN @ 75' O.C. MAX. AND MAX. 7' HIGH FROM ROADWAY.
13. PROP. SITE CIRCULATION SIGNAGE (SEE ARCH. PLANS FOR DETAILS & SPECIFICATIONS)
14. PROP. MONUMENT SIGN (SEE ARCH. PLANS FOR DETAILS & SPECIFICATIONS)
15. PROP. W14-1 'DEAD END' SIGN

GRAPHIC SCALE
0 10 20 40
(IN FEET)
1 INCH = 20 FEET

NO.	DATE	REVISIONS
1	7/22/24	REV. PER DRC COMMENTS
	5/10/24	REVIEW SET

SUN CREDIT UNION

COOPER CITY, FLORIDA
FOR: SUN CREDIT UNION

MILLER LEGG
South Florida Office: 13680 NW 5th Street, Suite 200
Sunrise, Florida 33325
954-436-7000
www.millerlegg.com

CERTIFICATE OF AUTHORIZATION: LB6680

DES.	DRWN.	CHK.

PROJECT / FILE NO.: 23-00434
DRAWING NO.: C3.1
DATE DRAWN: 2/7/25

SITE GEOMETRY, MARKING, & SIGNAGE PLAN

SAFETY IS IN YOUR HANDS.
EVERY DIG. EVERY TIME.

JOAQUIN A. MOJICA LICENSE No. 60488 STATE OF FLORIDA PROFESSIONAL ENGINEER

APPROVED : JOAQUIN A. MOJICA, P.E.
FLA. REGISTRATION NO. 60488 DATE : 10/24/2025

V:\PROJECTS\2023\23-00434 - SUN CREDIT UNION\DRAWINGS\23-00434_GEO.DWG by MGRINBANK 3/27/2025 2:25:38 PM

NOTE:
REFER TO FDOT INDEX NO. 520-001 FOR ADDITIONAL INFORMATION.

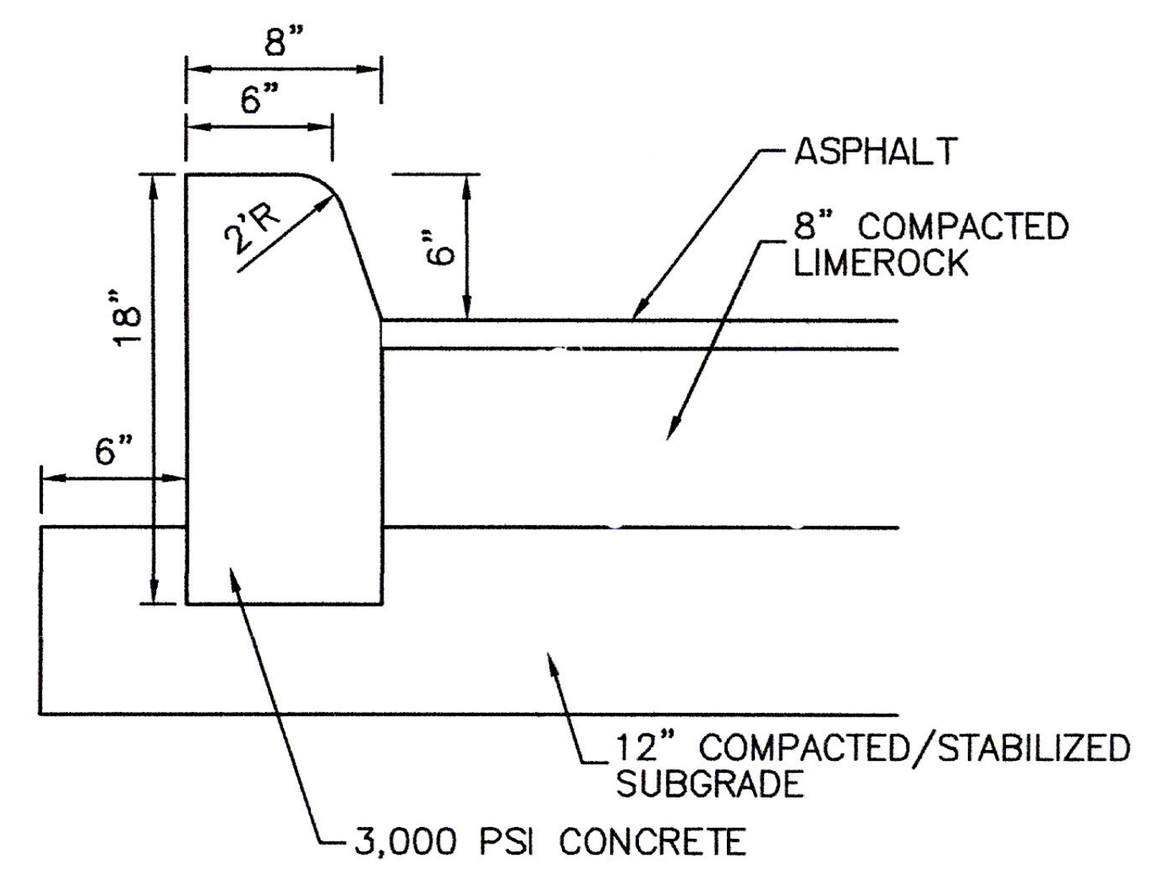

TYPE 'D' CURB

N.T.S.

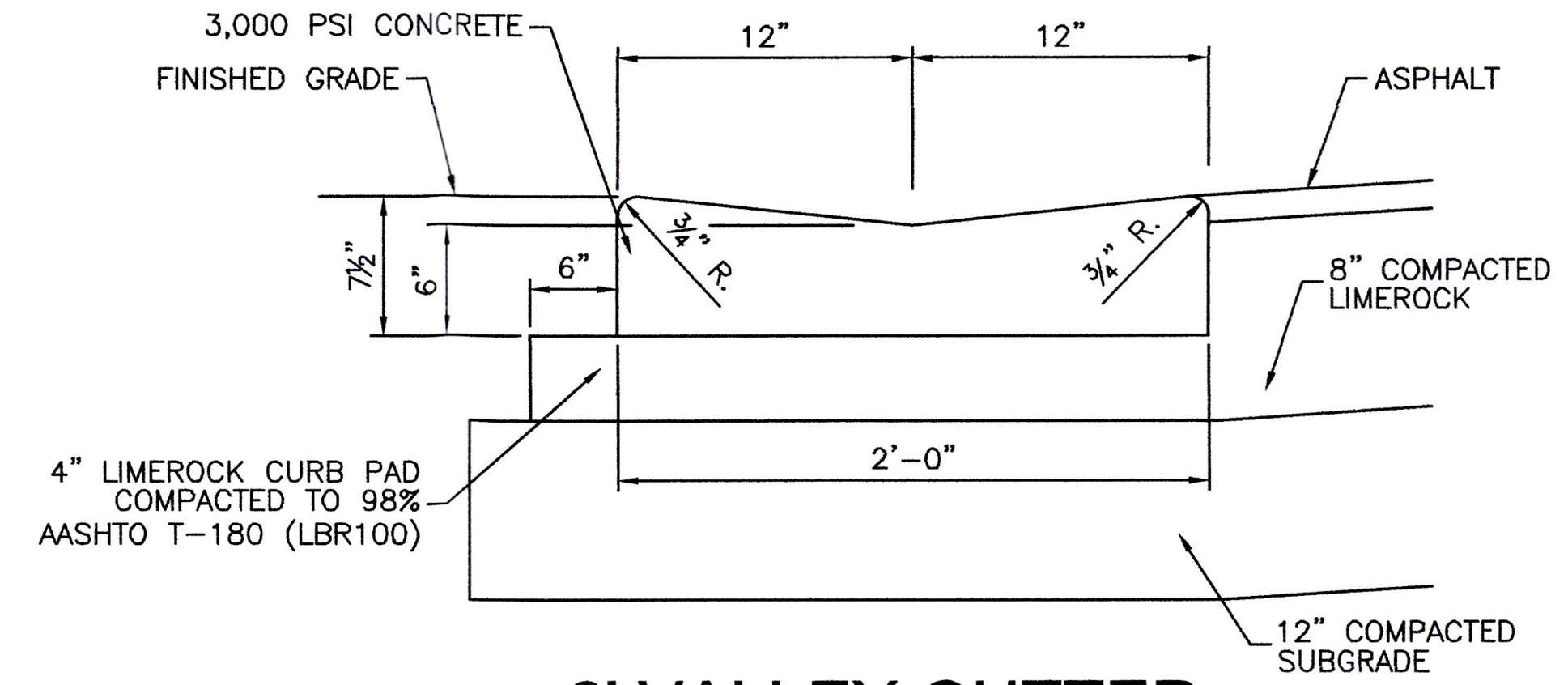

2' VALLEY GUTTER

N.T.S.

* WHEN USED ON HIGH SIDE OF ROADWAYS, THE CROSS SLOPE OF THE GUTTER SHALL MATCH THE CROSS SLOPE OF THE ADJACENT PAVEMENT. THE THICKNESS OF THE LIP SHALL BE 6", UNLESS OTHERWISE SHOWN ON PLANS.

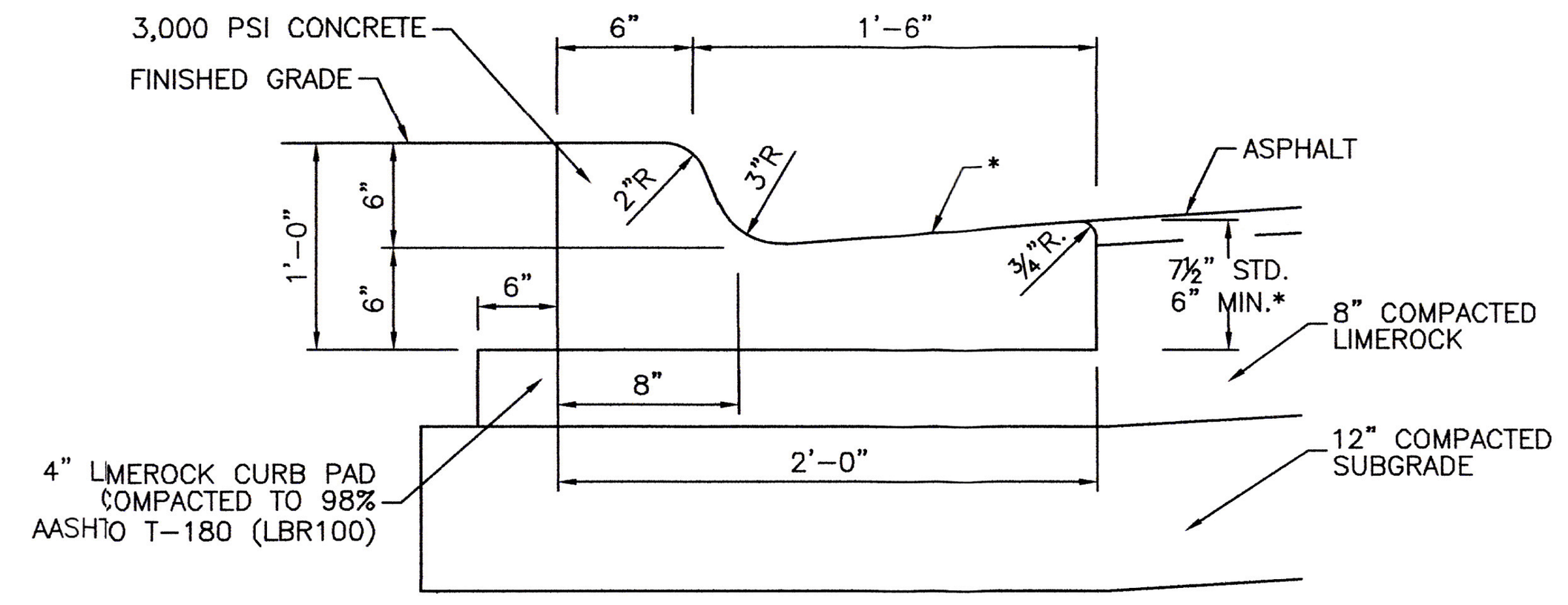

NOTES:
WHEN USED ON HIGH SIDE OF ROADWAYS, THE CROSS SLOPE OF THE GUTTER SHALL MATCH THE CROSS SLOPE OF THE ADJACENT PAVEMENT AND THE THICKNESS OF THE LIP SHALL BE 6", UNLESS OTHERWISE SHOWN.

NOTES:
REFER TO FDOT INDEX NO. 520-001 FOR ADDITIONAL INFORMATION.

TYPE 'F' CURB & GUTTER

N.T.S.

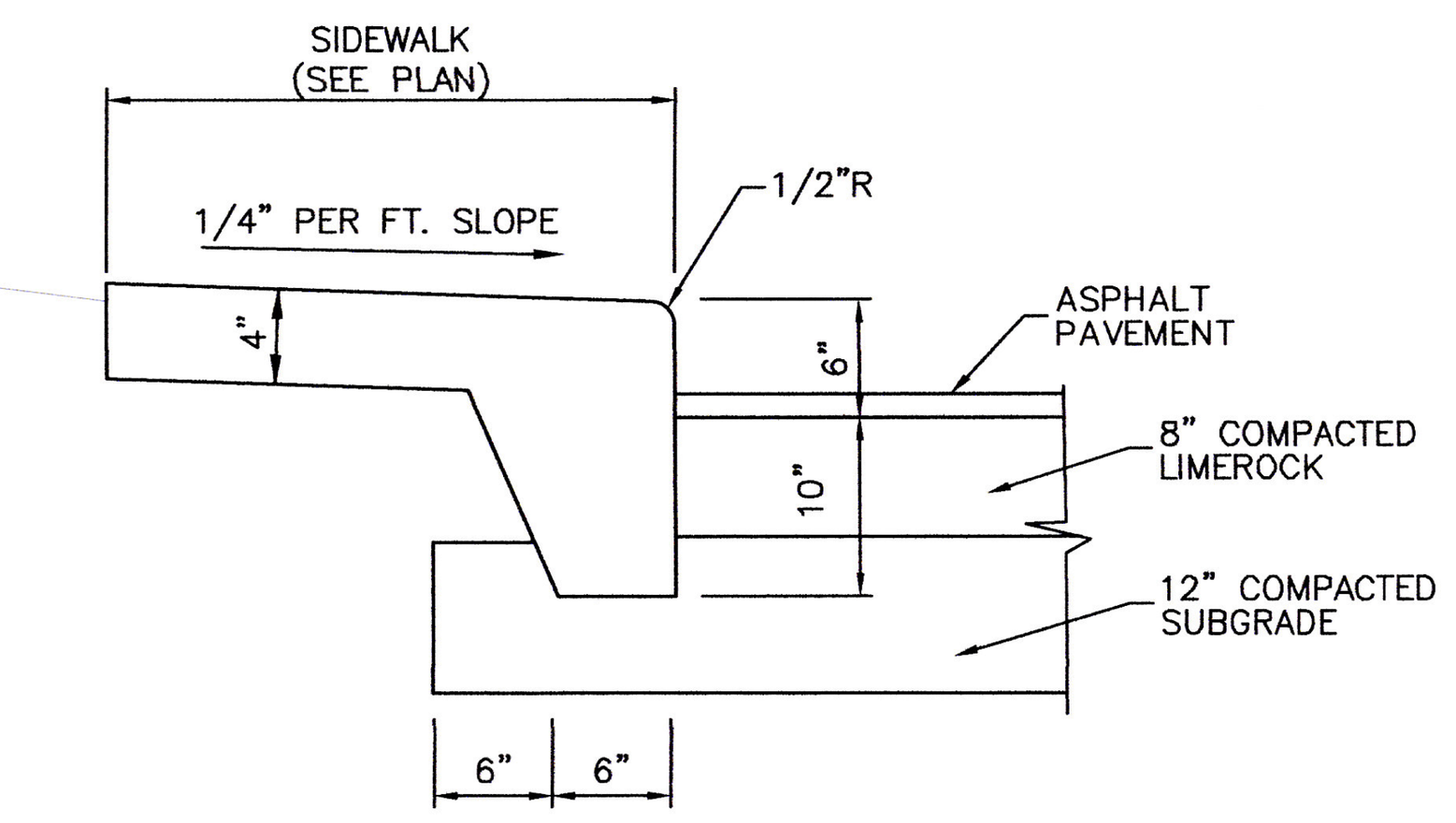

MONOLITHIC CURB AND SIDEWALK DETAIL

N.T.S.
(3,500 PSI (MIN))

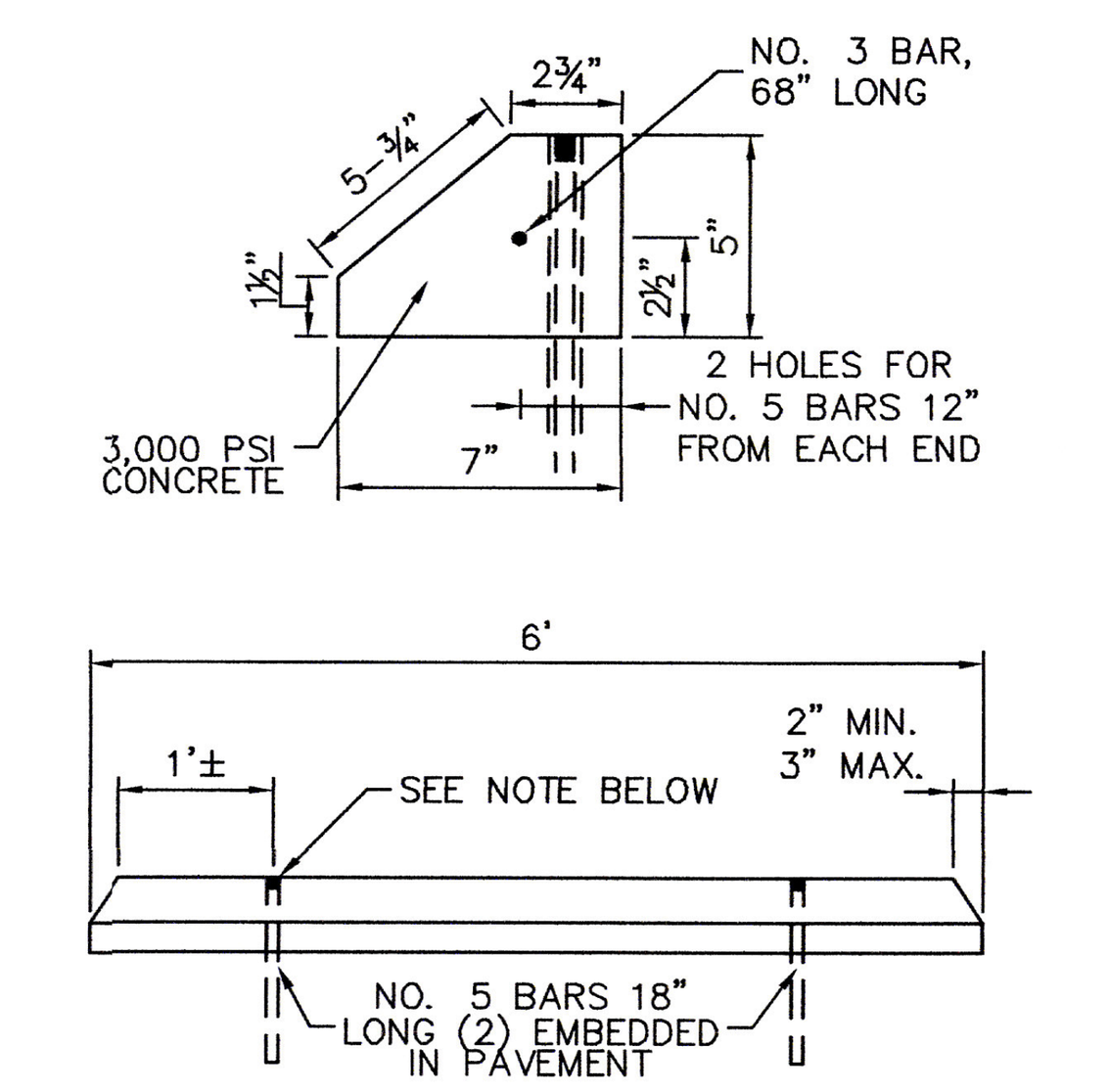

NOTE:
BARS TO BE DRIVEN 3/4 INCHES BELOW TOP OF WHEEL STOP AND GROUT FILLED FLUSH WITH TOP OF WHEEL STOP.

WHEEL STOP DETAIL

N.T.S.

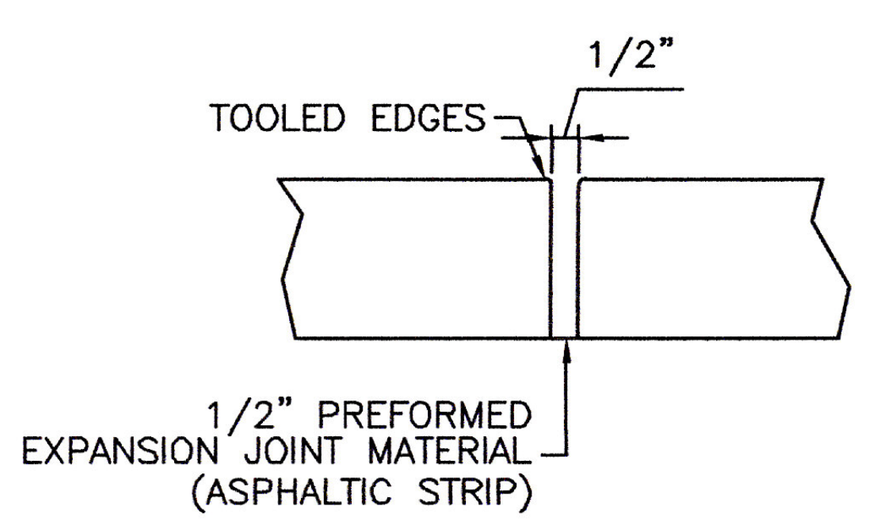

EXPANSION JOINT
(30 FT MAX SPACING)

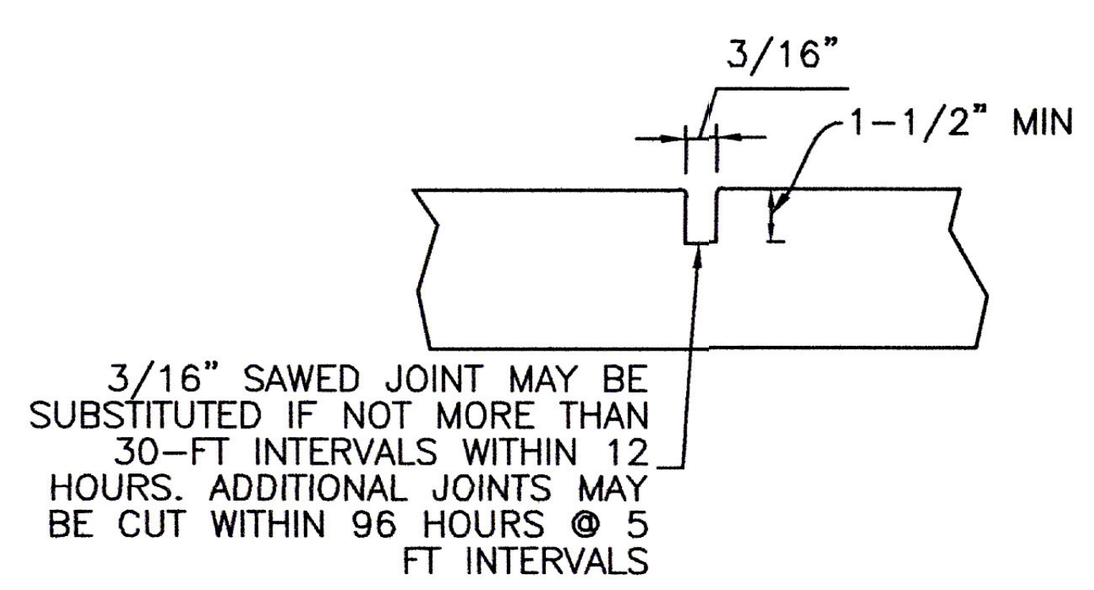

CONTRACTION JOINT
(5 FT MAX SPACING)

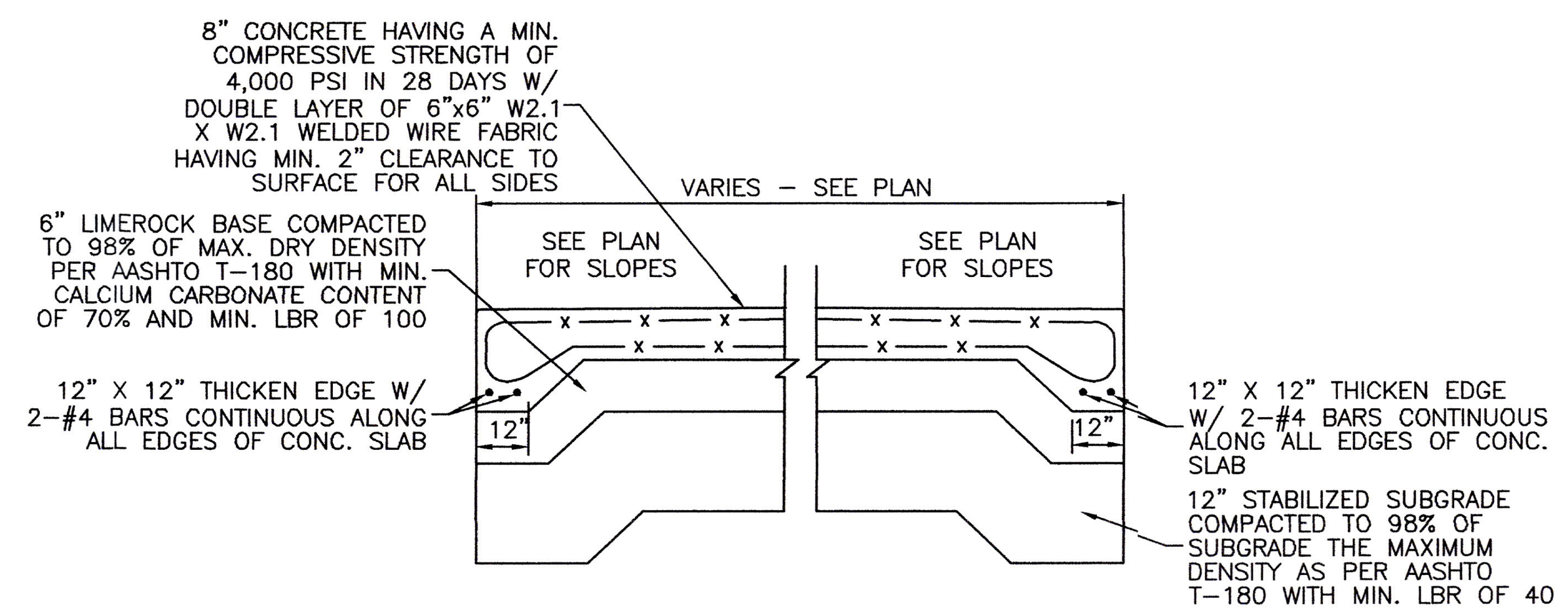

CONCRETE PAVEMENT SECTION

N.T.S.

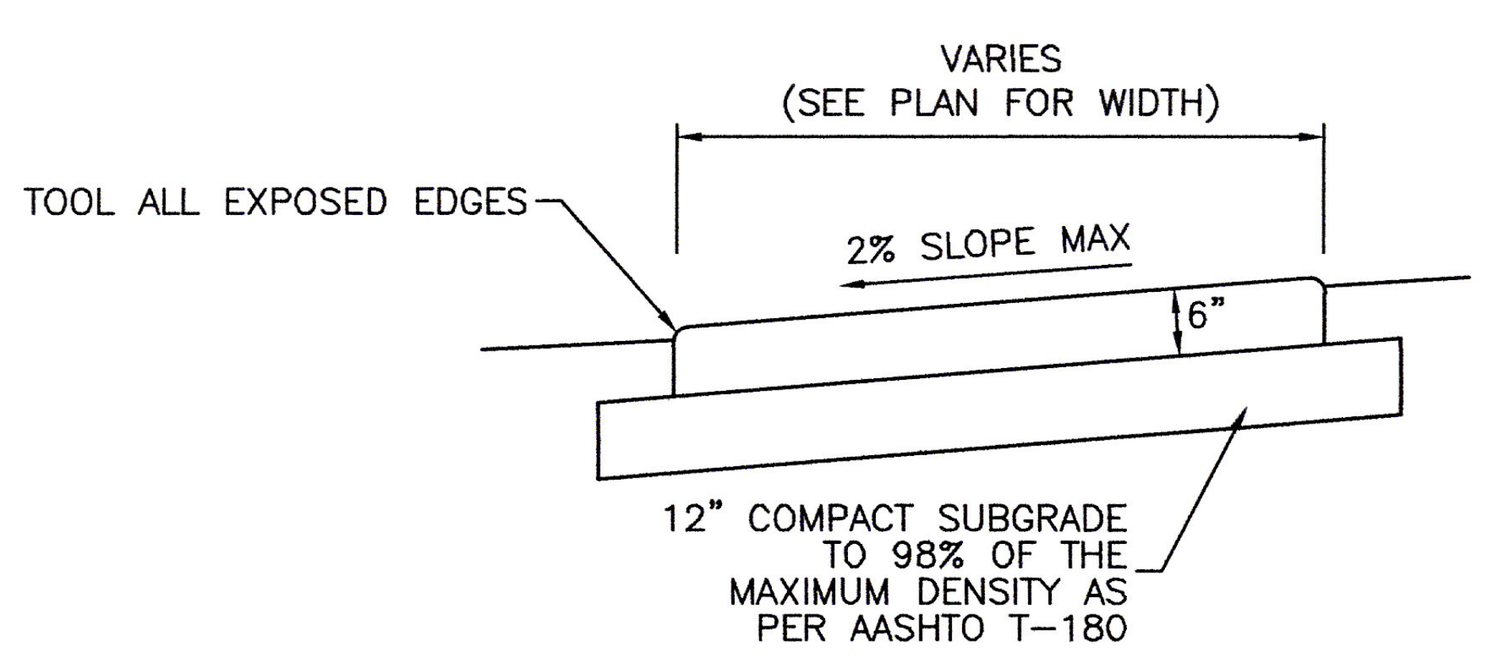

NOTES:
1. PROVIDE EXPANSION JOINTS BETWEEN SIDEWALK AND CURB OR AT ANY OTHER RIGID STRUCTURE/MATERIAL.
2. EXPANSION JOINTS SHALL BE PROVIDED AT 30 FT MAX SPACING. SIDEWALK JOINTS PLACEMENT SHALL BE IN ACCORDANCE WITH F.D.O.T. STANDARDS OR AS APPROVED BY ENGINEER.
3. ULTIMATE COMPRESSIVE STRENGTH OF CONCRETE SHALL BE 3,000 PSI @ 28 DAYS FOR SIDEWALKS/WALKWAYS.
4. FOR SIDEWALKS COMPACT SUBGRADE TO 98% OF THE MAXIMUM DENSITY AS DETERMINED BY AASHTO T-180.
5. TOOLED CONTRACTION JOINT SHALL BE PROVIDED AT 5 FT MAXIMUM SPACING. SAWED CONTRACTION JOINT MAY BE SUBSTITUTED IF CUT AT NO MORE THAN 30 FT INTERVALS WITHIN 12 HOURS AFTER CONCRETE HAS SET. ADDITIONAL CUTS AT 5 FT INTERVALS MUST BE CUT WITHIN 96 HOURS. SIDEWALK JOINTS PLACEMENT SHALL BE IN ACCORDANCE WITH F.D.O.T. STANDARDS OR AS APPROVED BY ENGINEER.
6. ALL CONCRETE SIDEWALKS SHALL BE CONSTRUCTED IN ACCORDANCE WITH F.D.O.T. STANDARDS, INCLUDING ANY REQUIRED 'CURB RAMPS'.
7. SIDEWALK SHALL BE 6" THICK AT DRIVEWAY LOCATIONS.

CONCRETE WALKWAY/SIDEWALK

N.T.S.

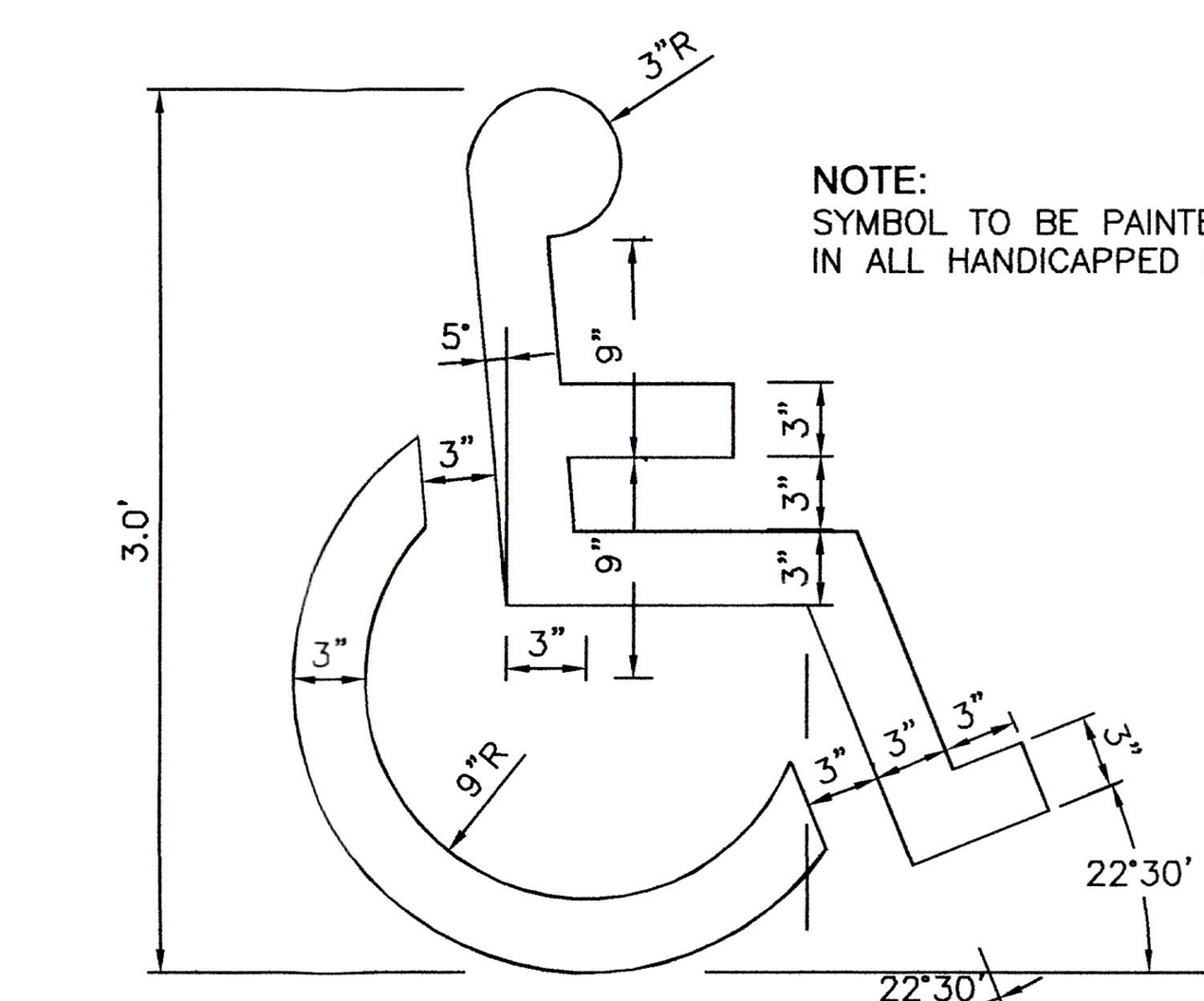

NOTE:
SYMBOL TO BE PAINTED WHITE IN ALL HANDICAPPED SPACES.

PAINTED HANDICAP SYMBOL

N.T.S.

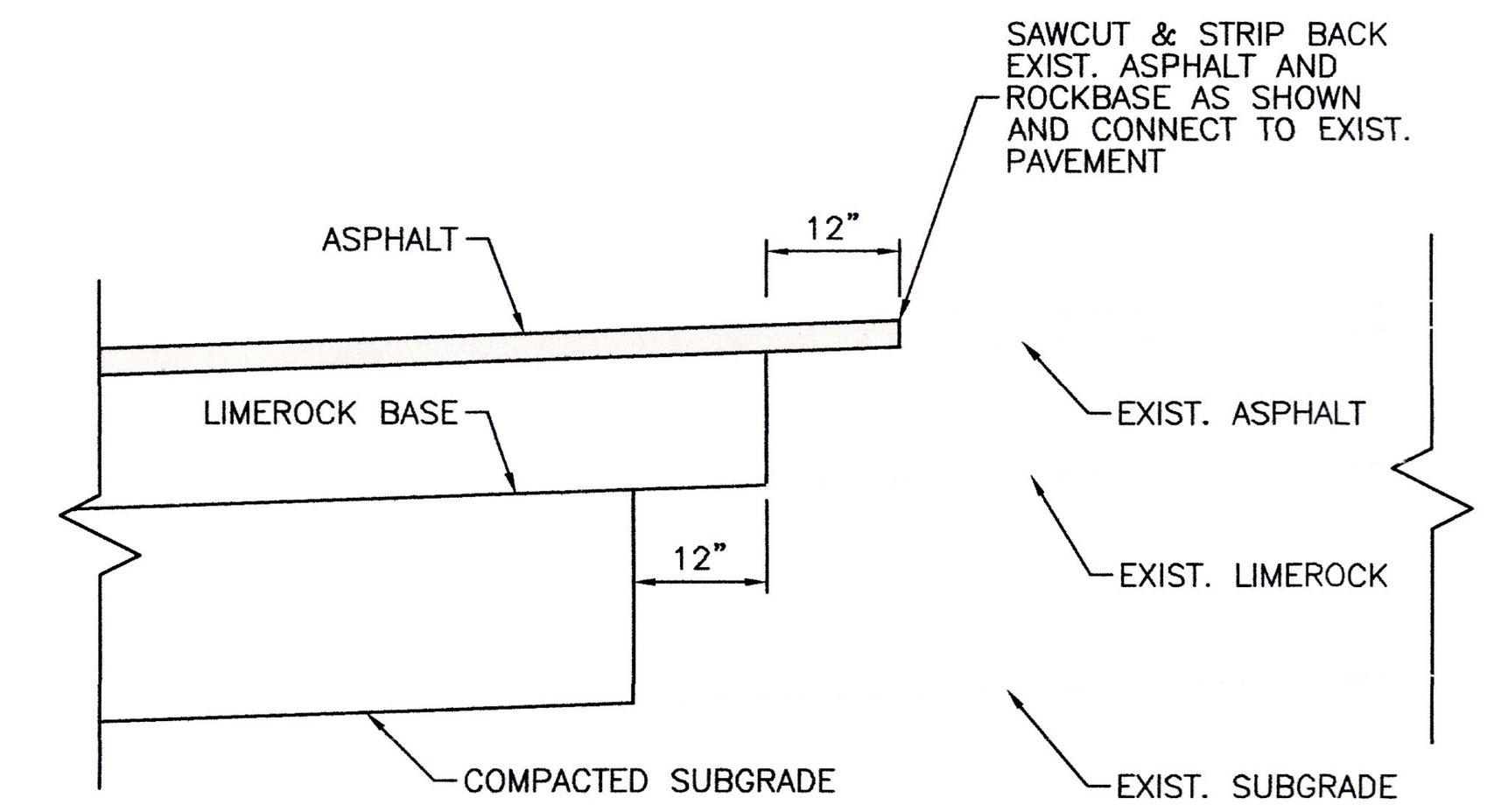

CONNECTION TO EXISTING PAVEMENT DETAIL

N.T.S.

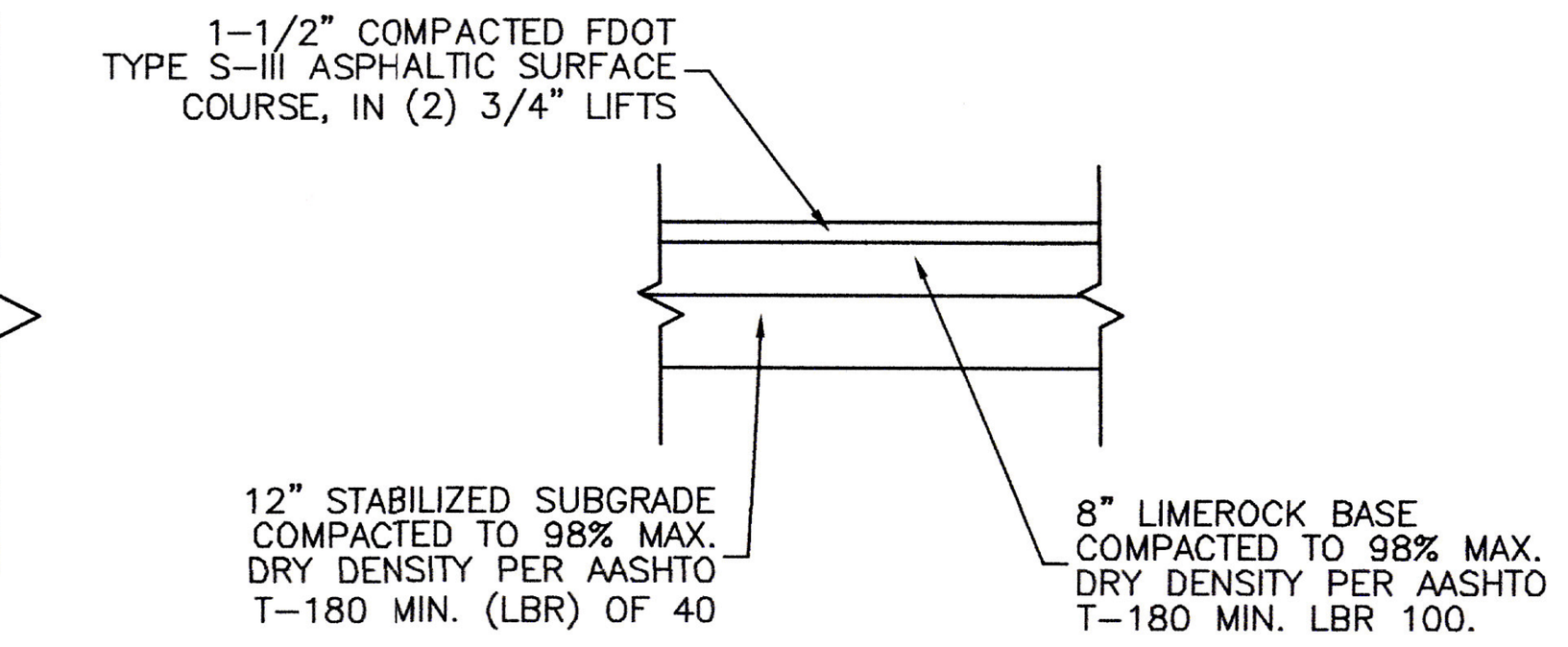

NOTE:
PAVEMENT AREAS SHOULD BE COMPACTED TO A MINIMUM OF 98% OF THE MODIFIED PROCTOR MAXIMUM DRY DENSITY TO A DEPTH OF AT LEAST 12" BELOW THE SUBGRADE LEVEL.

ASPHALT PAVEMENT TYPICAL CROSS-SECTION

N.T.S.

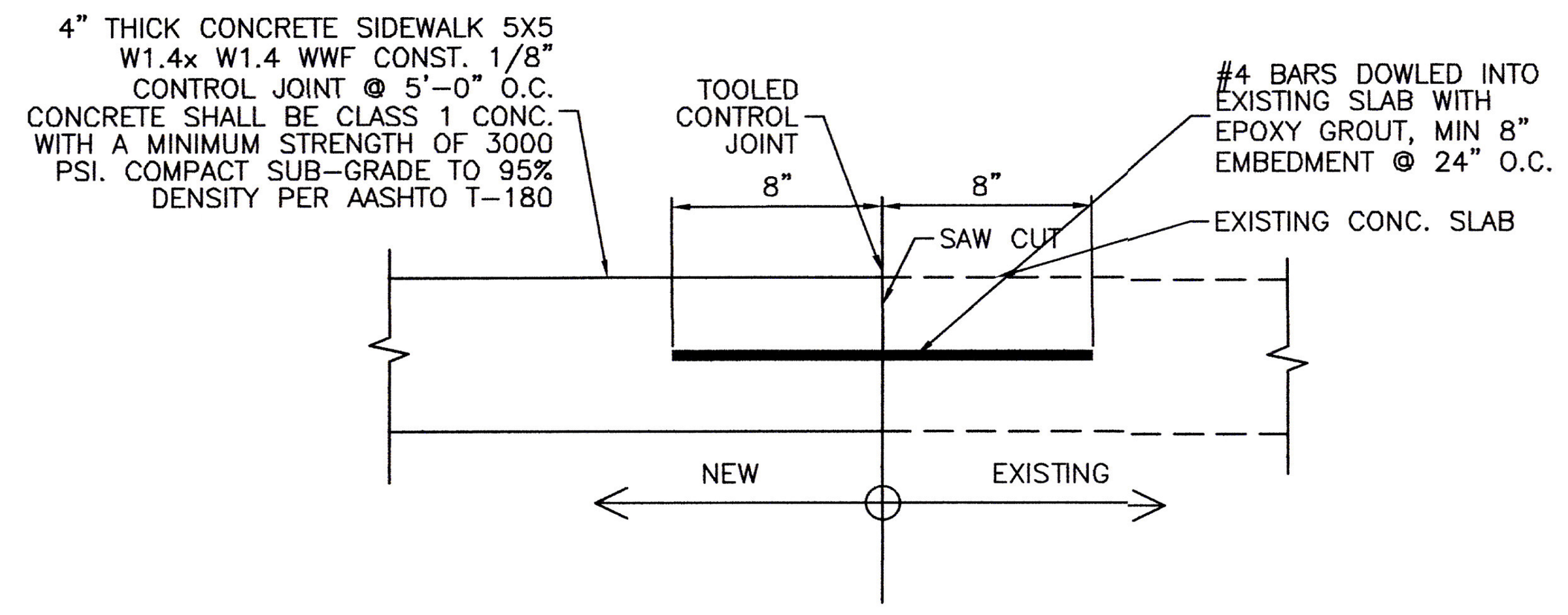

NEW SIDEWALK TO EXISTING CONNECTION DETAIL

N.T.S.

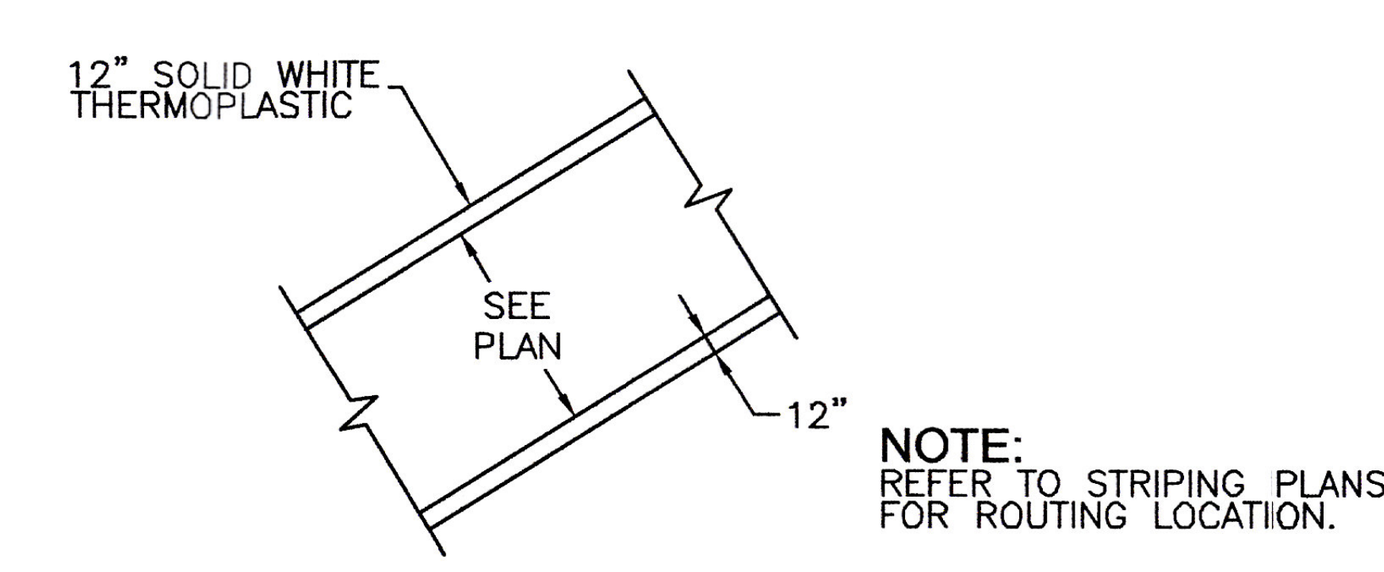

NOTE:
REFER TO STRIPING PLANS FOR ROUTING LOCATION.

PEDESTRIAN ROUTING STRIPING

N.T.S.

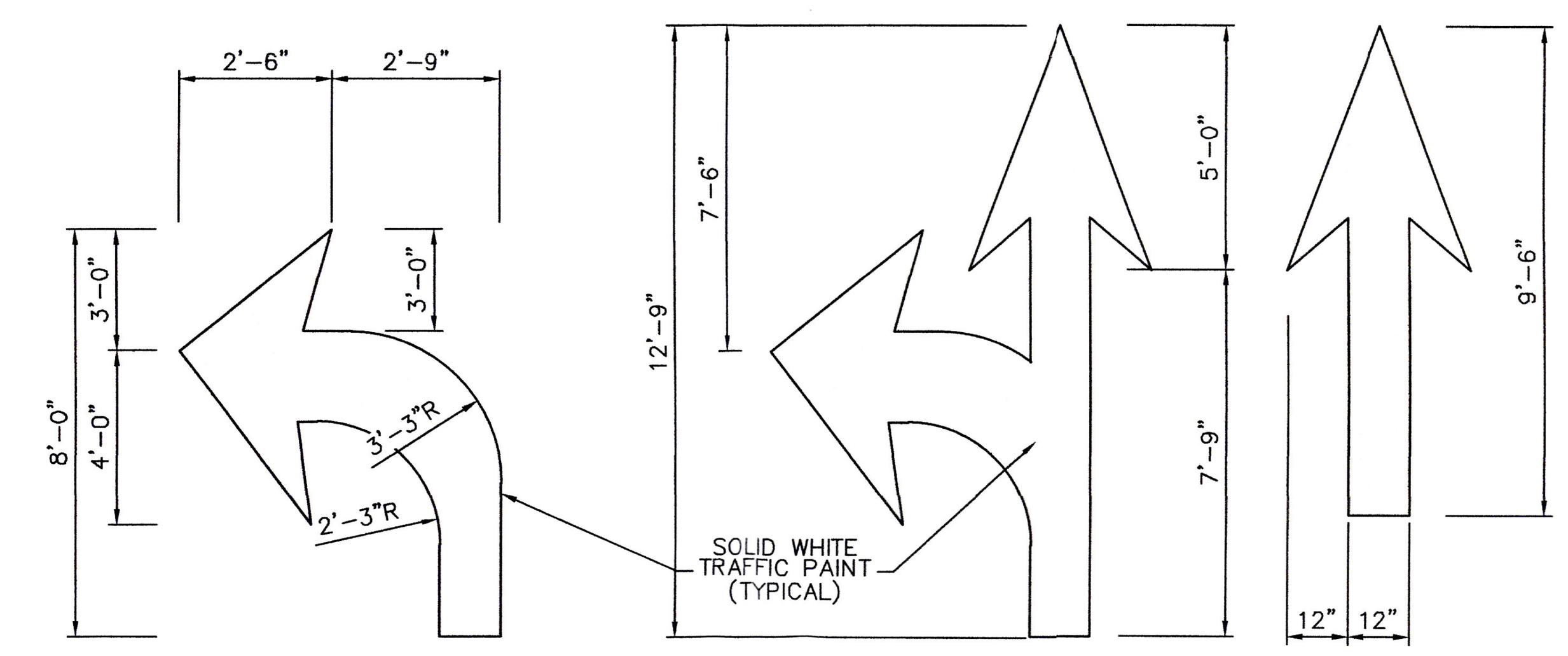

PAVEMENT MARKINGS DETAIL

N.T.S.

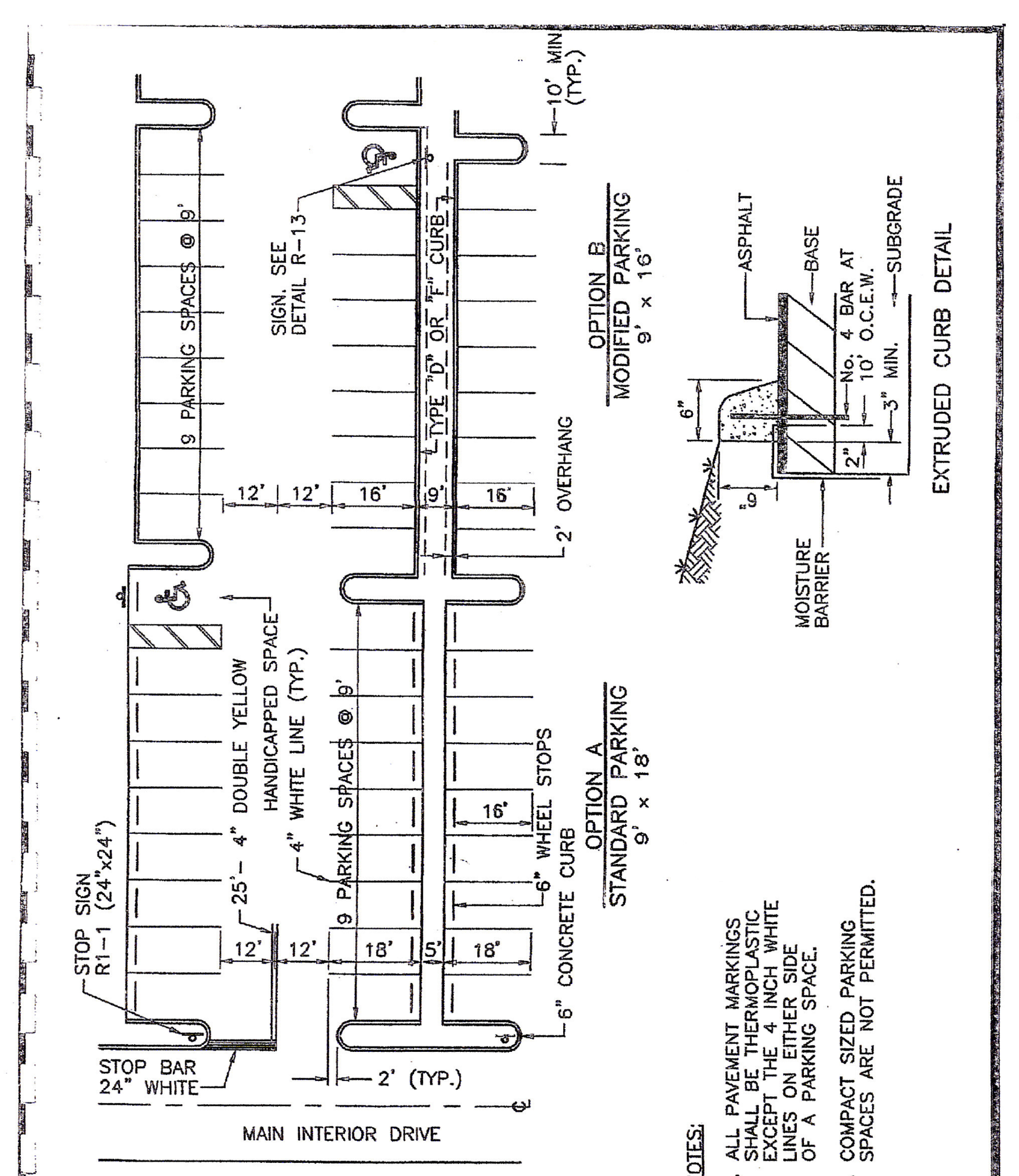

CITY OF COOPER CITY ENGINEERING STANDARDS COOPER CITY, FLORIDA	SCALE: N.T.S. REVISED:	STANDARD ROAD DETAIL TYPICAL PARKING AREA REQUIREMENTS	R-7

Revised October 2022

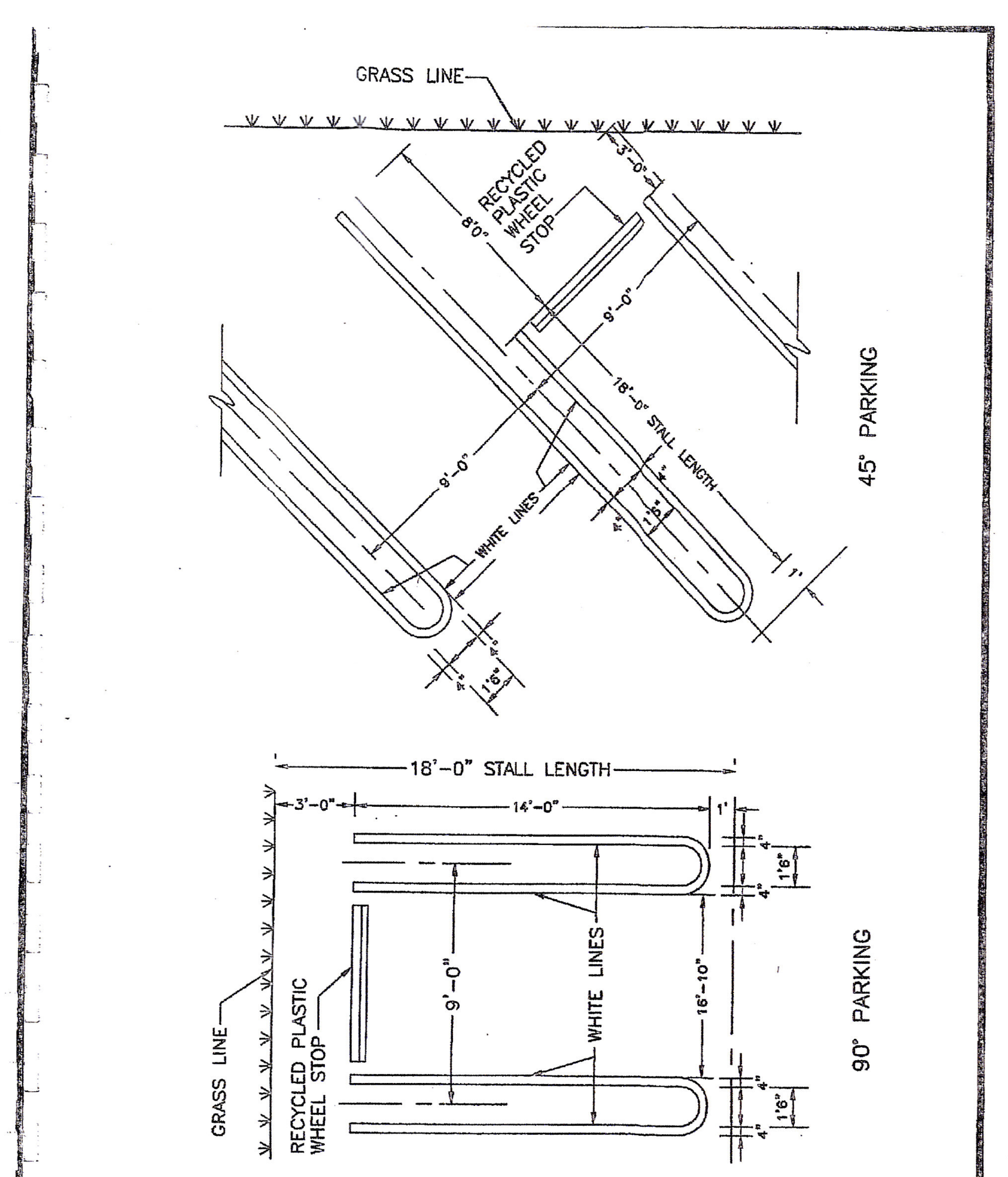

CITY OF COOPER CITY ENGINEERING STANDARDS COOPER CITY, FLORIDA	SCALE: N.T.S. REVISED:	STANDARD ROAD DETAIL PARKING STALL STRIPING DETAIL	R-7A

Revised October 2022

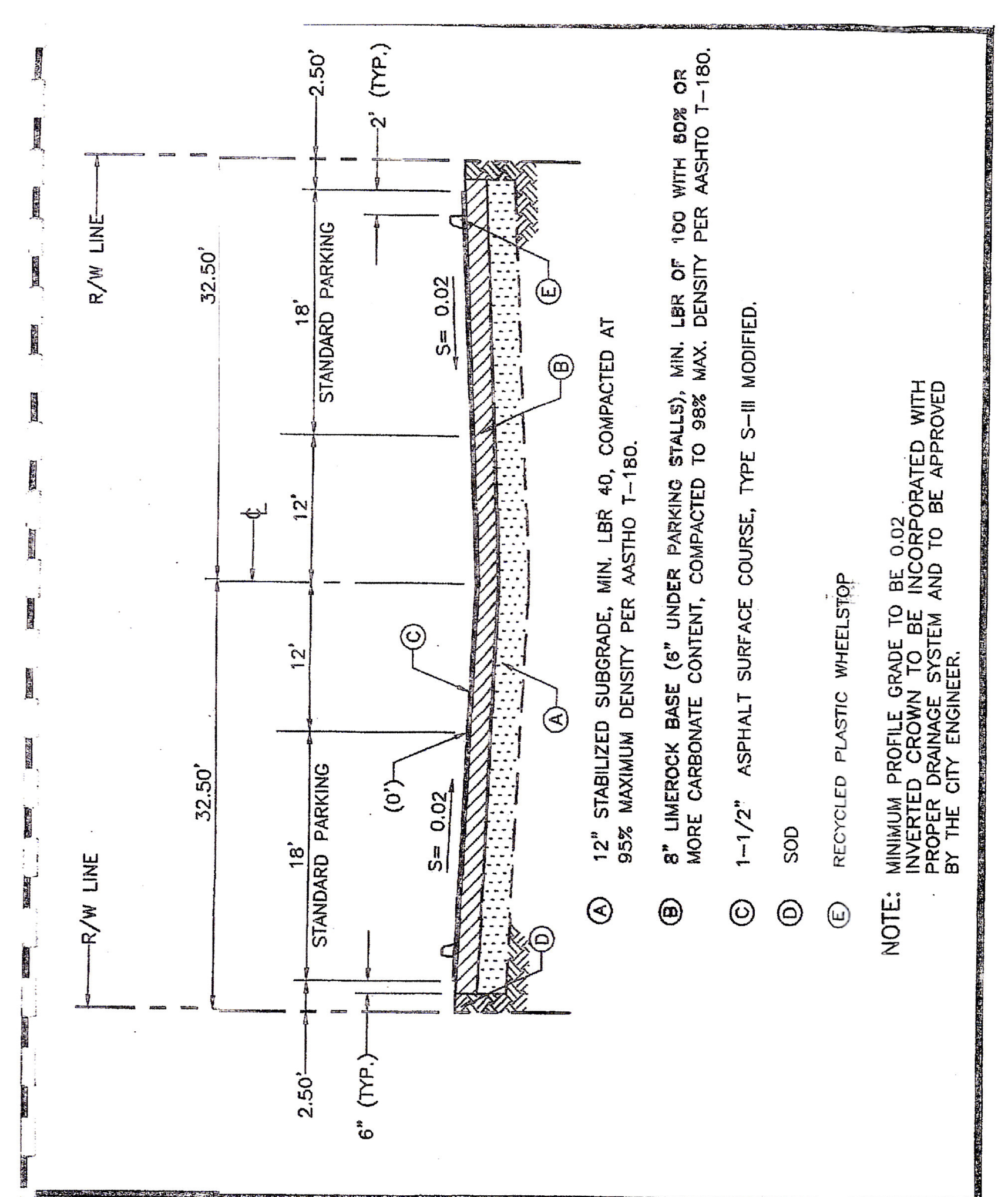

CITY OF COOPER CITY ENGINEERING STANDARDS COOPER CITY, FLORIDA	SCALE: N.T.S. REVISED:	STANDARD ROAD DETAIL PARKING AREA INVERTED CROWN SECTION	R-8

Revised October 2022

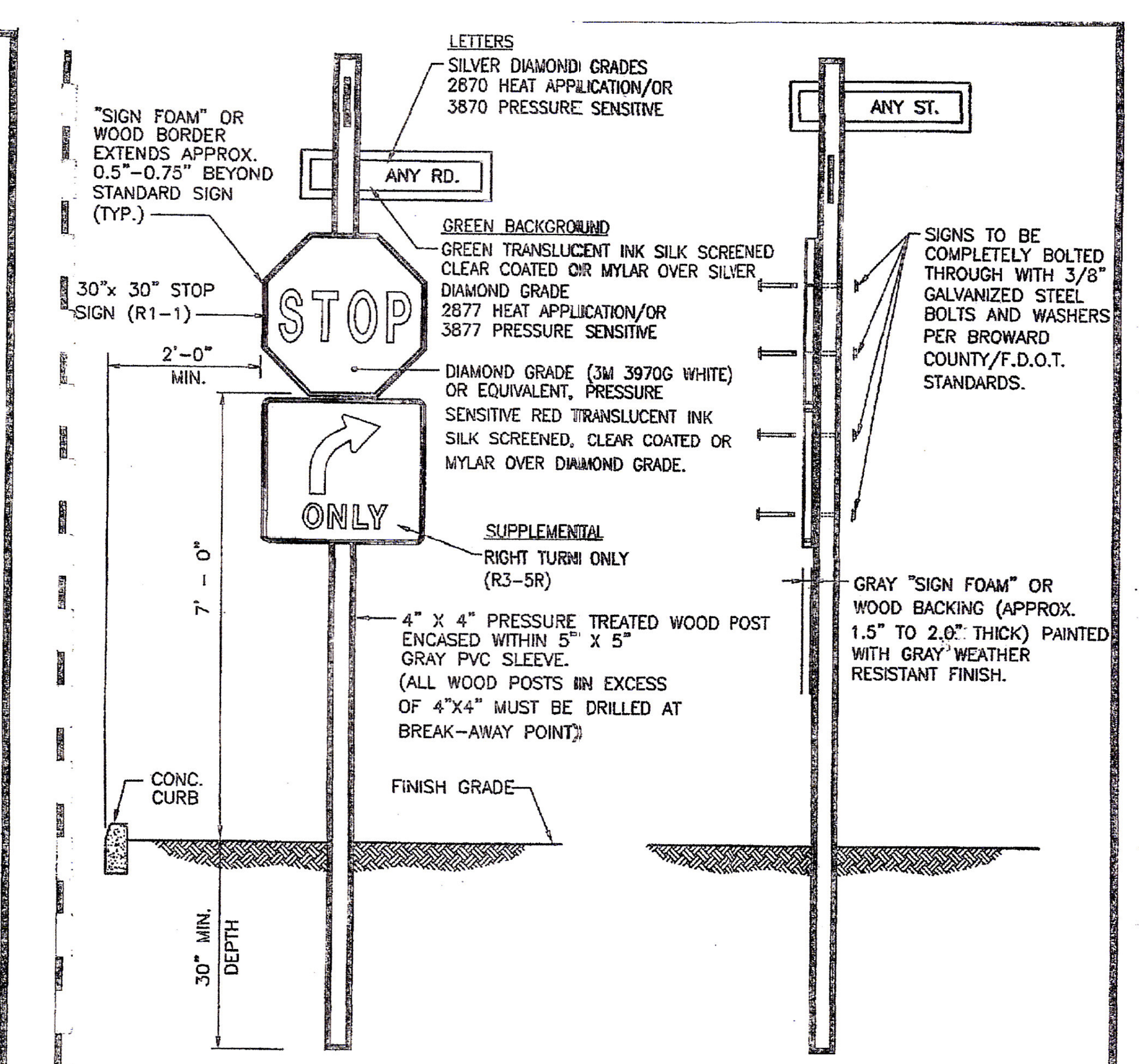

NOTES:
1. ALL SIGNS TO CONSIST OF HIGH INTENSITY REFLECTIVE MATERIALS.
2. INSTALLATION MUST MAINTAIN SIZE, SHAPE AND COLOR OF STANDARD M.U.T.C.D. SIGN. ALL SIGNS TO BE INSTALLED IN CONFORMANCE WITH THE M.U.T.C.D. AND ALL APPLICABLE BROWARD COUNTY AND F.D.O.T. STANDARDS.
3. SIMILAR, BUT SOMEWHAT DIFFERENT AESTHETIC INSTALLATIONS MAY BE IMPLEMENTED ON PRIVATE PROPERTY SUBJECT TO CITY APPROVAL.

CITY OF COOPER CITY ENGINEERING STANDARDS COOPER CITY, FLORIDA	SCALE: N.T.S. REVISED:	STANDARD ROAD DETAIL TYPICAL STOP SIGN AND STREET NAME ASSEMBLY	R-11

Revised October 2022

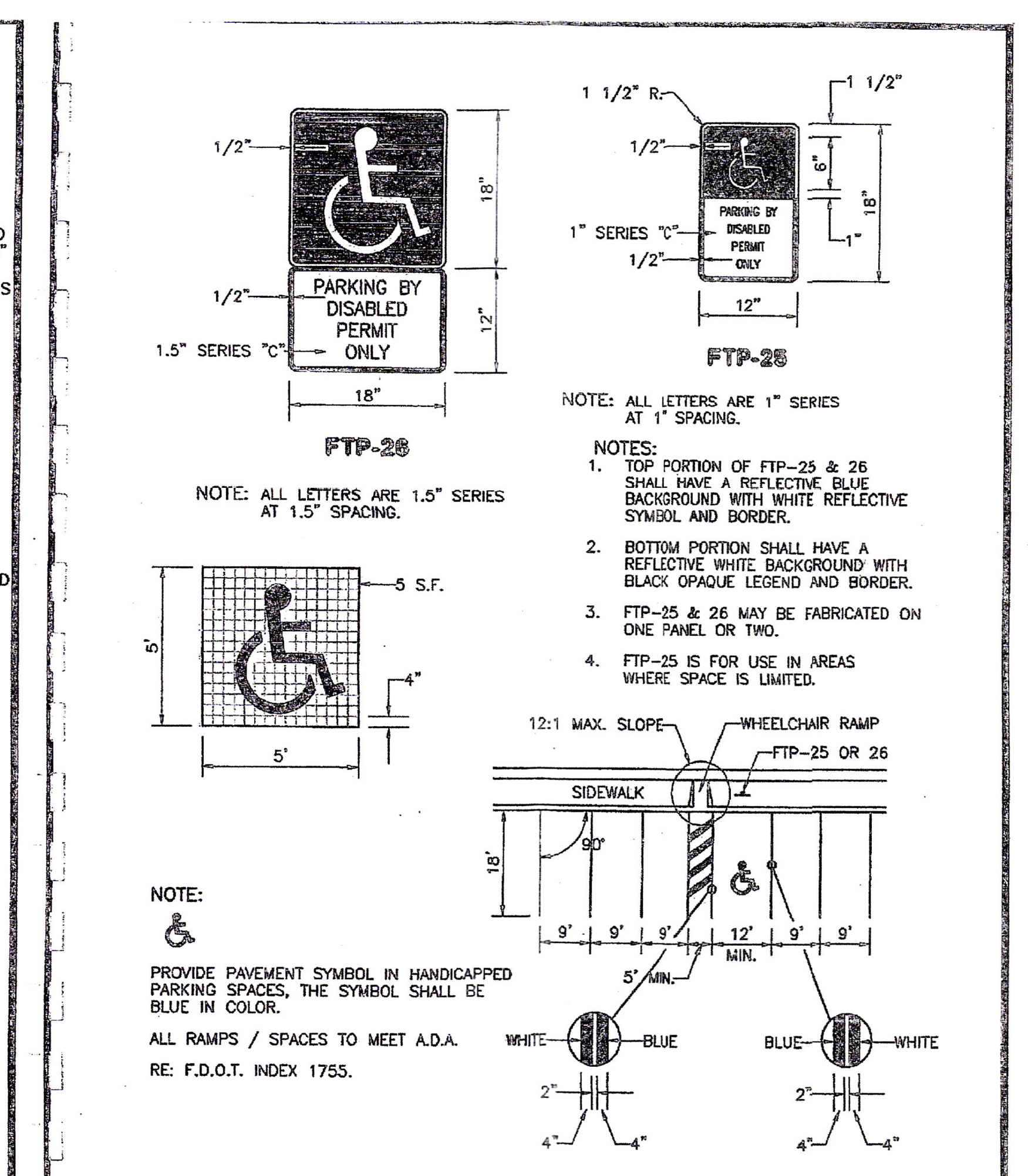

CITY OF COOPER CITY ENGINEERING STANDARDS COOPER CITY, FLORIDA	SCALE: N.T.S. REVISED:	STANDARD ROAD DETAIL HANDICAPPED PARKING SIGN & STRIPING DETAIL	R-13

Revised October 2022

811

SAFETY IS IN YOUR HANDS.
EVERY DIG. EVERY TIME.

JOAQUIN A. MOJICA LICENSE No. 60488 STATE OF FLORIDA PROFESSIONAL ENGINEER

APPROVED : JOAQUIN A. MOJICA, P.E.
FLA. REGISTRATION NO. 60488 DATE : 10/24/2025

V:\PROJECTS\2023\23-00434 - SUN CREDIT UNION\DRAWINGS\23-00434_GEO.DWG by MGRINBANK 3/27/2025 2:25:38 PM

NO.	DATE	REVISIONS	DES.	DWN.
1	7/22/24	REV. PER DRC COMMENTS		
	5/10/24	REVIEW SET		

SUN CREDIT UNION

COOPER CITY, FLORIDA
FOR: SUN CREDIT UNION

MILLER LEGG
South Florida Office: 13680 NW 5th Street, Suite 200
Sunrise, Florida · 33325
954-436-7000
www.millerlegg.com

GENERAL CONSTRUCTION DETAILS

CERTIFICATE OF AUTHORIZATION: LB6680

DES	DRWN	CHK
DES.	DWN.	CHK.

PROJECT / FILE NO. 23-00434
DRAWING NO. C3.2
DATE DRAWN: 2/7/25

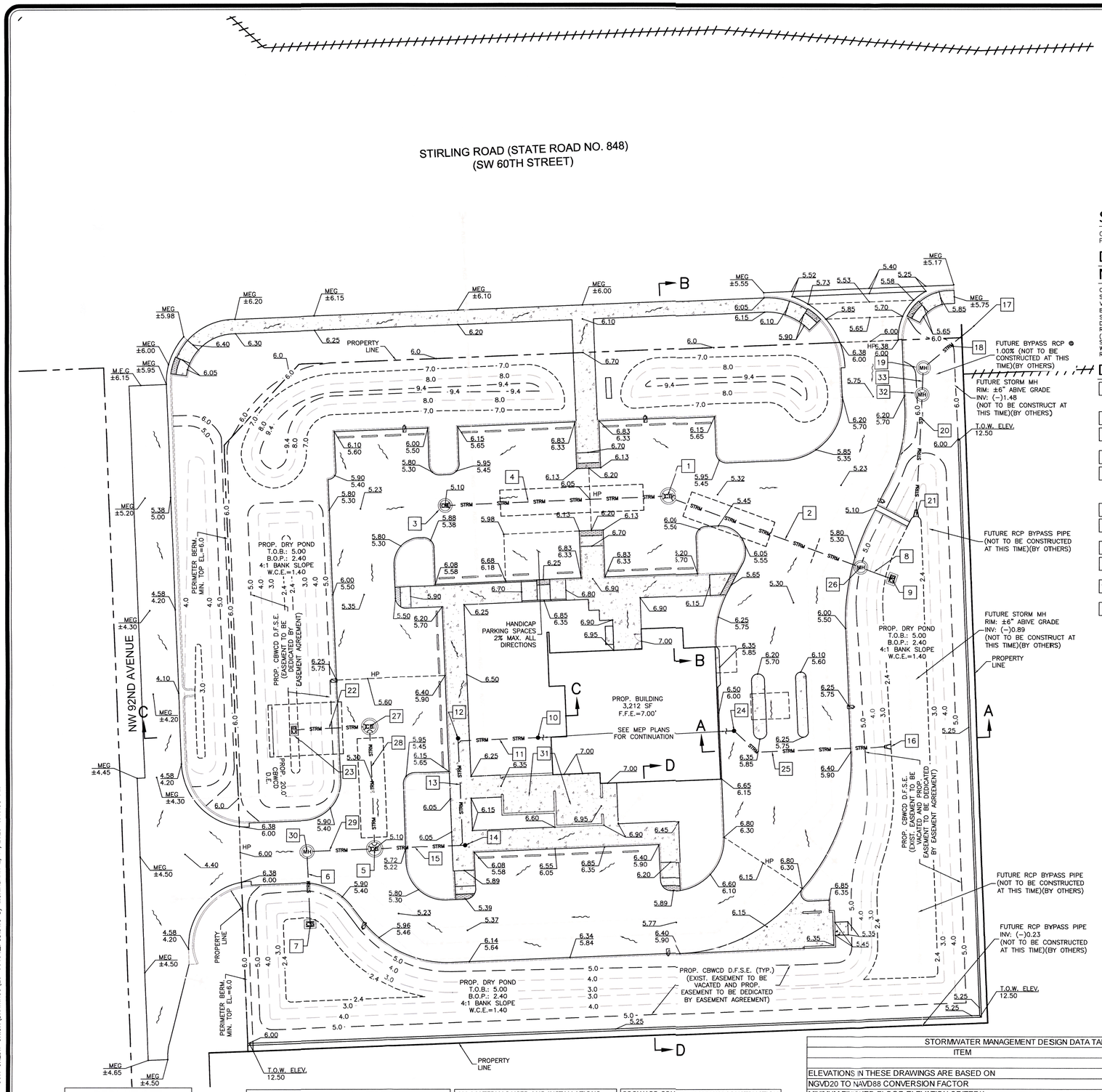

GRAPHIC SCALE

0 10 20 40

(IN FEET)
1 INCH = 20 FEET

SITE INFORMATION:

CURRENT ZONING: E1 (COUNTY) ESTATE
PROPOSED RE–ZONING: B–1

DRAINAGE STRUCTURE NOTE:

CATCH BASINS & DRAINAGE COLLECTION STRUCTURES SHALL BE DESIGNED WITH AN EIGHTEEN INCH (18") VERTICAL SUMP FROM THE INVERT ELEVATION (OR BOTTOM OF BAFFLE) TO THE BOTTOM OF THE STRUCTURE. IN ADDITION, A TWELVE INCH (12") DIAMETER OPEN SUMP, FILLED WITH WASHED GRADE ROCK, NO LARGER THAN ONE AND ONE–HALF INCHES (1–1/2") SHALL BE PLACED IN THE BASE OF THE STRUCTURE. PRIOR TO DISCHARGE TO ANY BODY OF WATER OR ANY SEEPAGE TRENCH, A POLLUTION RETARDANT BAFFLE SHALL BE INSTALLED.

DRAINAGE CALLOUTS:

1. PROP. 5'ø CATCH BASIN R.E.=5.60 I.E.(W)=1.40 W/ PRB I.E.(SE)=1.40 W/ PRB
2. PROP. 77 LF 18" HDPE W/ 34 LF OF 10'x5.8' EXFILTRATION TRENCH
3. PROP. 4'ø CATCH BASIN R.E.=5.10 I.E.(E)=1.40 W/ PRB
4. PROP. 84 LF 18" HDPE W/ 55 LF OF 10'x5.8' EXFILTRATION TRENCH
5. PROP. 4'ø CATCH BASIN R.E.=5.10 I.E.(N)=1.40 W/ PRB I.E.(E)=1.50 I.E.(W)=1.40 W/ PRB
6. PROP. 28 LF 18" HDPE STORM DRAINAGE LINE @ 0.50% SLOPE
7. PROP. TYPE 'C' DBI R.E.=2.40 I.E.(N)=(–)1.50
8. PROP. 13 LF 18" HDPE STORM DRAINAGE LINE @ 0.50% SLOPE
9. PROP. TYPE 'C' DBI R.E.=2.40 I.E.(NW)=(–)1.50
10. PROP. 6" CLEANOUT R.E.=6.95 I.E.(E,W)=5.00
11. PROP. 35 LF 6" SCH. 40 PVC ROOF DRAIN LINE @ 1.00% MIN.
12. PROP. 6" CLEANOUT R.E.=6.30 I.E.(S,E)=4.69
13. PROP. 41 LF 6" SCH. 40 PVC ROOF DRAIN LINE @ 1.00% MIN.
14. PROP. 6" CLEANOUT R.E.=6.10 I.E.(N,W)=4.28
15. PROP. 35 LF 6" SCH. 40 PVC ROOF DRAIN LINE @ 1.00% MIN.
16. PROP. 6" FLARED END SECTION I.E.(W)=2.40
17. CORE DRILL & CONNECT TO EXIST. CATCH BASIN @ I.E.=±0.00
18. PROP. 24 LF 24" HDPE STORM DRAINAGE LINE @ 1.04% SLOPE
19. PROP. 4'ø DRAINAGE MANHOLE R.E.=6.00 I.E.(S)=2.00 I.E.(NE)=0.25
20. PROP. 43 LF 18" HDPE STORM DRAINAGE LINE @ 0.70% SLOPE
21. PROP. 18" FLARED END SECTION I.E.(N)=2.40
22. PROP. 26 LF 18" HDPE STORM DRAINAGE LINE @ 0.50% SLOPE
23. PROP. TYPE 'C' DBI R.E.=2.40 I.E.(E)=(–)1.50
24. PROP. 4" CLEANOUT R.E.=5.90 I.E.(E,N)=3.90
25. PROP. 62 LF 6" SCH. 40 PVC ROOF DRAIN LINE @ 1.00% MIN.
26. PROP. 4'ø DRAINAGE MANHOLE R.E.=5.00 I.E.(NW)=1.40 I.E.(SE)=(–)1.44 W/ WEIR (WEIR TOP ELEV.=3.40)
27. PROP. 5'ø CATCH BASIN R.E.=5.45 I.E.(S)=1.40 W/ PRB I.E.(W)=(–)1.34 W/ WEIR (WEIR TOP ELEV.=3.40)
28. PROP. 45 LF 18" HDPE W/ 38 LF OF 10'x5.8' EXFILTRATION TRENCH
29. PROP. 22 LF 18" HDPE
30. PROP. 4'ø DRAINAGE MANHOLE R.E.=5.55 I.E.(E)=1.40 I.E.(S)=(–)1.50 W/ WEIR (WEIR TOP ELEV.=3.40)
31. PROP. MECHANICAL ENCLOSURE HOUSING A/C PADS AND GENERATOR
32. PROP. 4'ø CONTROL STRUCTURE R.E.=6.75 I.E.(N,S)=2.10 WEIR TOP ELEV.=5.51 (N) W/ 2" ORIFICE INV.=3.45
33. PROP. 6 LF 18" HDPE STORM DRAINAGE LINE @ 0.70% SLOPE

GRADING & DRAINAGE NOTES:

1. ALL EARTHWORK ACTIVITIES (CUT, FILL, DREDGING, ETC.) SHALL BE PERFORMED IN ACCORDANCE TO THE GEOTECHNICAL REPORT RECOMMENDATIONS.
2. CONTRACTOR TO OBTAIN A COPY OF THE GEOTECHNICAL REPORT AND MAINTAIN IT ON–SITE AT ALL TIMES.
3. EARTHWORK ACTIVITIES SHALL BE MONITORED AND PERFORMED UNDER CLOSE SUPERVISION OF THE GEOTECHNICAL ENGINEER AND FOLLOWING THE GEOTECHNICAL REPORT RECOMMENDATIONS FOR METHODOLOGY, PROCEDURES, COMPACTION, ETC.
4. NO CONSTRUCTION ACTIVITIES (EARTHWORK, UTILITIES, TREE REMOVAL, OR GROUND DISTURBANCE) TO TAKE PLACE OUTSIDE OF THE LIMITS OF CONSTRUCTION UNLESS OTHERWISE APPROVED BY CITY OF COOPER CITY.
5. CONTRACTOR SHALL FIELD VERIFY LOCATION, INVERT, ELEVATION, MATERIALS AND PIPE SIZE BEFORE CONSTRUCTION BEGINS.
6. PROPOSED SIDEWALKS SHALL NOT EXCEED 2% ACROSS AND 5% LONGITUDINAL.
7. ALL PROPOSED GRADES AND CONTOURS ARE TO EDGE OF PAVEMENT UNLESS OTHERWISE NOTED.
8. CONTRACTOR SHALL OBTAIN A COPY OF THE SITE GEOTECHNICAL REPORT AND INCLUDE ALL NECESSARY SOIL WORK IN THE PROJECT BID.
9. CONTRACTOR TO VERIFY SLOPES ON ALL SIDEWALKS, HANDICAP ZONES, RAMPS AND DRIVEWAY CONNECTIONS FOR COMPLIANCE WITH ADA REQUIREMENTS AND/OR OPERATIONAL FUNCTIONABILITY PRIOR TO POURING FINAL CONCRETE OR ASPHALT.
10. CONTRACTOR SHALL CONTACT ENGINEER OF RECORD AT LEAST 24 HOURS PRIOR TO POURING CONCRETE OR PLACING ASPHALT ON ALL DRIVEWAY/CURB CUT CONNECTIONS FOR ENGINEERING INSPECTIONS.
11. ALL RIGHT–OF–WAY DISTURBED BY THIS WORK SHALL BE RESTORED TO IT'S ORIGINAL CONDITION AND IN ACCORDANCE WITH APPLICABLE COUNTY CODES. ALL DISTURBED AREAS MUST BE SODDED, MATCHING EXISTING GRASS TYPE.
12. IF SHEETING, SHORING, OR DEWATERING, INCLUDING WELL POINTS ARE NECESSARY, THE CONTRACTOR MUST MONITOR AND CONTROL ALL WORK THAT MAY CAUSE CRACKING TO ANY ADJACENT BUILDING, STRUCTURE, OR PROPERTY AREA. THE CONTRACTOR SHALL BE RESPONSIBLE FOR ANY DAMAGES CAUSED BY THESE OPERATIONS. COST OF SHEETING, SHORING, OR DEWATERING SHALL BE INCLUDED IN THE RELATED BID ITEM FOR THE WORK BEING DONE.
13. THE CONTRACTOR IS RESPONSIBLE FOR KEEPING EXISTING AND NEW INLETS CLEAN OF MILLING MATERIAL, LIMEROCK, DEBRIS, ETC. DURING THE CONSTRUCTION AT NO ADDITIONAL COST TO THE OWNER. ALL LINES AND STRUCTURES SHALL BE CLEANED PRIOR TO FINAL INSPECTION AND ACCEPTANCE.
14. EXISTING DRAINAGE STRUCTURES WITHIN THE LIMITS OF CONSTRUCTION SHALL REMAIN UNLESS OTHERWISE NOTED.
15. EXISTING MANHOLES AND INLETS SCHEDULED TO REMAIN SHALL BE THOROUGHLY CLEANED BY REMOVING ALL DEBRIS AND SEDIMENTS, AND THE INTERIOR SHALL BE SEALED WITH AN APPROVED NON–TOXIC BITUMASTIC SEALANT.
16. PRIOR TO CONSTRUCTION THE CONTRACTOR WILL INSPECT ALL EXISTING STRUCTURES WHICH ARE TO REMAIN AND NOTIFY THE ENGINEER OF ANY OBVIOUS STRUCTURAL DEFICIENCIES.
17. CONTRACTOR SHALL ADJUST ALL EXISTING VALVES, CATCH BASINS, GRATES, AND STORM MANHOLE COVERS TO MEET NEW GRADES WHERE APPLICABLE.
18. WHERE NEW PAVEMENT MEETS EXISTING, CONNECTION SHALL BE MADE IN A NEAT STRAIGHT LINE AND FLUSH WITH THE EXISTING PAVEMENT.
19. LANDSCAPING SHALL NOT ENCROACH INTO THE CBWCD EASEMENT.

FUTURE BYPASS:

FUTURE BYPASS CORRIDOR FOR USE BY PROPERTIES WITH FOLIO NUMBERS 5141 05 01 0075, 5141 05 01 0073, 5141 05 02 0010, 5141 05 02 0020, 5141 05 02 0030, OR 5141 05 02 0040. MAXIMUM ALLOWABLE DISCHARGE FROM THE OFF–SITE PROPERTIES THROUGH THE BYPASS CORRIDOR SHALL BE 40 CSM FOR EACH PROPERTY. REFER TO THE MINUTES OF THE JULY 28, 2021 MEETING OF THE CENTRAL BROWARD WATER CONTROL DISTRICT COMMISSION AGENDA NO. 6.B.2 FOR ADDITIONAL INFORMATION CONCERNING THE DRAINAGE CORRIDOR RESERVATION.

CBWCD GENERAL NOTES:

1. THE FOLLOWING GENERAL NOTES ARE REQUIRED BY CENTRAL BROWARD WATER CONTROL DISTRICT. THEY ARE NOT MEANT TO BE ALL INCLUSIVE, AND IT IS THE ENGINEER OF RECORDS RESPONSIBILITY TO ADD ANY NOTES WHICH WILL INFORM THE OWNER AND THE CONTRACTOR OF ANY ADDITIONAL REQUIREMENT OF THE CENTRAL BROWARD WATER CONTROL DISTRICT.
2. ANY REVISIONS TO THESE PLANS MUST BE APPROVED BY THE CENTRAL BROWARD WATER CONTROL DISTRICT PRIOR TO CONSTRUCTION.
3. BONDS: UPON DISTRICT BOARD OF COMMISSIONERS APPROVAL OF PLANS, BUT BEFORE CONSTRUCTION CAN COMMENCE, THE FOLLOWING ITEMS MUST BE COMPLIED WITH:
   - 3.1. BOND (CASH OR SURETY) IN THE DISTRICTS FAVOR, MUST BE POSTED IN THE AMOUNT OF 110 PERCENT OF THE DEVELOPER'S ENGINEER OF RECORD'S ESTIMATE OF COST OF CONSTRUCTION OF THE PAVING AND DRAINAGE WORKS. (SUBJECT TO APPROVAL OF THE COST ESTIMATE BY THE DISTRICT SECRETARY/MANAGER OR DISTRICT ENGINEER.)
   - 3.2. SWALES, LAKE/POND BANKS, SLOPES, CANALS, AND OTHER EXCAVATIONS SHALL BE BONDED SEPARATELY FROM OTHER DRAINAGE IMPROVEMENTS AND WILL BE HELD BY THE DISTRICT UNTIL SUCCESSFUL COMPLETION. THE AMOUNT OF THIS SEPARATE BOND WILL BE DETERMINED BY THE DISTRICT BOARD OF COMMISSIONERS AND BY RECOMMENDATION OF THE DISTRICT SECRETARY/MANAGER.
   - 3.3. THE DISTRICT'S BOND FORM IS THE ONLY FORM APPROVED FOR USE, AND IT SHALL BE A RECORDED INSTRUMENT, RELEASE OR REDUCTION FROM THE RECORDED INSTRUMENT SHALL BE THE RESPONSIBILITY OF THE APPLICANT.
   - 3.4. BONDS SHALL BE PROVIDED BY THE PRINCIPALS OF DEVELOPMENT ONLY. CONTRACTOR OR SUB–CONTRACTOR BONDS ARE NOT ACCEPTABLE.
   - 3.5. UPON SUCCESSFUL COMPLETION OF CONSTRUCTION, AND ACCEPTANCE OF "AS BUILTS/RECORD DRAWINGS" BY THE DISTRICT BOARD OF COMMISSIONERS, A PERCENTAGE OF THE PERFORMANCE BOND AS DETERMINED BY THE DISTRICT MAY BE RELEASED. THE BALANCE OF BOND SHALL REMAIN IN FULL FORCE AND EFFECT FOR AN ADDITIONAL TWELVE (12) MONTHS AFTER FINAL INSPECTION AND APPROVAL, UNLESS SUPPLEMENTED BY NEW BOND FORMS IN THE REQUIRED AMOUNTS AND APPROVED BY THE DISTRICT ATTORNEY.
4. INSPECTIONS: WHEN CONSTRUCTION IS IN PROGRESS, THE DISTRICT'S INSPECTOR WILL INSPECT THE INSTALLATION OF DRAINAGE WORKS, ACCORDING TO AN INSPECTION SCHEDULE ESTABLISHED BY THE BOARD OF COMMISSIONERS. INSPECTION MUST BE MADE BY DISTRICT PERSONNEL BEFORE BACKFILLING OF ANY STORM DRAIN STRUCTURES, PIPES, EXFILTRATION TRENCHES, WORK IN DISTRICT CANALS, AND BEFORE PLACEMENT OF ASPHALT OR CONCRETE PAVEMENT. CALL (954) 432–5110 FOR AN INSPECTION APPOINTMENT A MINIMUM OF TWENTY–FOUR (24) HOURS IN ADVANCE. ALL COSTS OF PERIODIC INSPECTIONS OF CONSTRUCTION BY THE DISTRICT SHALL BE BORNE BY THE DEVELOPER.
5. LIMEROCK BASE COURSE SHALL CONFORM TO THE REQUIREMENTS OF SECTION 911 OF FLORIDA DEPARTMENT OF TRANSPORTATION STANDARD SPECIFICATIONS. EXCEPT THE MINIMUM PERCENTAGE OF CARBONATES OF CALCIUM AND MAGNESIUM SHALL BE SIXTY PERCENT (60 %).
6. ALL MUCK AND DELETERIOUS SOILS SHALL BE REMOVED FROM THE TOP OF BANK TO TOP OF BANK LIMITS OF DRY EXTENTION/RETENTION AREAS AND EXFILTRATION TRENCHES DOWN TO A MINIMUM OF FIVE FEET (5') BELOW THE WATER CONTROL ELEVATION AND REPLACED WITH SUITABLE WELL DRAINING SOILS.
7. ALL NUISANCE VEGETATION SHALL BE REMOVED FROM WITHIN THE PROJECT LIMITS AND WITHIN THE PORTION OF THE CBWCD CANAL THAT FALLS WITHIN THE PROPERTY BOUNDARY. THIS ALSO APPLIES WHEN THE PROPERTY ABUTS A ROADWAY AND THE DISTRICT CANAL IS LOCATED ON THE OPPOSITE SIDE OF THE ROAD WITH RESPECT TO THE PROPERTY. IN THIS CASE, NUISANCE VEGETATION SHALL BE REMOVED FROM THE CANAL BANK NEAREST THE PROPERTY LINE.
8. EXISTING STORM SEWERS SHALL BE CLEANED FROM THE POINT OF CONNECTION WITH NEW STORM SEWERS OR DRAINAGE STRUCTURES TO THE FIRST EXISTING STRUCTURE UPSTREAM AND DOWNSTREAM OF THE POINT OF CONNECTION. TELEVISION INSPECTION OF THE PIPES SHALL BE REVIEWED AND CERTIFIED THAT THEY ARE CLEAN BY THE ENGINEER OF RECORD PRIOR TO SUBMITTAL OF AS–BUILT DRAWINGS TO THE DISTRICT.
9. THE LIMITS OF ANY EASEMENT TO BE DEDICATED TO THE DISTRICT SHALL BE STAKED PRIOR TO INSTALLING TREES TO BE LOCATED WITHIN THREE (3) FEET OF A DISTRICT EASEMENT. THE STAKES SHALL REMAIN IN PLACE UNTIL THE SITE OR LANDSCAPE CONTRACTOR VERIFIES THE INTENDED PLANT LOCATION DOES NOT ENCROACH INTO A DISTRICT EASEMENT.
10. THE DISTRICT SECRETARY/MANAGER AND DISTRICT ENGINEER SHALL BE NOTIFIED PRIOR TO THE SUBMITTAL OF AS–BUILT/RECORD DRAWINGS OF ANY ENCROACHMENT WITHIN A DISTRICT EASEMENT NOT EXPRESSLY APPROVED BY THE DISTRICT BOARD OF COMMISSIONERS.
11. AS–BUILT SURVEY AND RECORD DRAWING: "AS–BUILT" PLANS FROM THE SURVEYOR OF RECORD MUST BE CERTIFIED AS "RECORD DRAWINGS" BY THE ENGINEER OF RECORD. THE SURVEYOR'S CERTIFICATION SHALL INCLUDE THE LAST DATE OF FIELD DATA ACQUISITION. THE ENGINEER'S CERTIFICATION SHALL INCLUDE THE CBWCD PERMIT COMPLIANCE STATEMENT. AS–BUILTS SHALL BE PROVIDED AS AN OVERLAY ON THE APPROVED CONSTRUCTION DRAWINGS AT THE SAME SCALE FOR COMPARISON PURPOSES. ALL REFERENCES TO "PROPOSED" SHALL BE STRUCK THROUGH AND REPLACED WITH THE AS–BUILT CONDITION. AS–BUILT SUBMITTALS SHALL FOLLOW THE SAME FORMAT OF GENERAL REVIEW AS DESCRIBED IN THE CENTRAL BROWARD WATER CONTROL DISTRICT'S STORMWATER MANAGEMENT REGULATIONS, STANDARDS, PROCEDURES, AND DESIGN CRITERIA MANUAL.
12. LAKE/POND, CANAL, AND DRY DETENTION/RETENTION AREA AS–BUILTS WILL BE CROSS–SECTIONED SHOWING THE DESIGNED SECTION AS DASHED, AS–BUILT SECTION AS SOLID, AND HAVE THE TOP OF BANK REFERENCE TO THE LAKE/CANAL MAINTENANCE EASEMENT. SPACING BETWEEN EACH CROSS–SECTION SHALL BE SUCH AS TO PROVIDE ENOUGH DATA TO DETERMINE IF THE LAKE/POND/CANAL/DRY DETENTION/RETENTION AREA WAS CONSTRUCTED AS DESIGNED. THE MAXIMUM SPACING BETWEEN CROSS SECTIONS SHALL BE 100'.
13. THE CONTRACTOR SHALL PROVIDE STABLE AND PERMANENT ELEVATION BENCHMARKS ON THE TOP OF EACH HEADWALL CAP FOR PIPES DISCHARGING INTO DISTRICT CANALS AND DRIVEWAY CULVERTS ALONG DISTRICT CANALS. THE BENCHMARK ELEVATION SHALL BE BASED ON NORTH AMERICAN VERTICAL DATUM OF 1988 (NAVD88) AND INCLUDE THE DATUM REFERENCE USING NATIONAL GEODETIC SURVEY BENCHMARKS OR FLORIDA DEPARTMENT OF TRANSPORTATION BENCHMARKS IN NAVD88 AND ONLY CONVERTED BACK TO NATIONAL GEODETIC VERTICAL DATUM OF 1929 (NGVD29), THE OTHER SHALL BE BASED ON NGVD29 AND INCLUDE THE DATUM REFERENCE. EACH HEADWALL SHALL HAVE ONE (1) NAVD88 AND ONE (1) NGVD29 BENCHMARK. CULVERTS CONNECTING DISTRICT CANALS ONLY REQUIRE ONE (1) BENCHMARK PER EACH PAIR OF HEADWALLS.
14. THE SURVEYOR OF RECORD SHALL ANNOTATE THE BENCHMARK' ELEVATIONS ON THE AS–BUILT DRAWING IN THE FORMAT PROVIDED BY THE DISTRICT ENGINEER. THE BENCHMARK DATA SHALL ALSO INCLUDE A NORTHING/EASTING COORDINATE AT THE CENTER OF EACH HEADWALL. THE HORIZONTAL DATUM SHALL BE BASED ON STATE PLANE, FLORIDA EAST ZONE, NORTH AMERICAN DATUM OF 1983/1990 (NAD83/90)

STORMWATER MANAGEMENT DESIGN DATA TABLE		
ITEM	ELEVATION IN FEET	
	REQUIRED	PROVIDED
ELEVATIONS IN THESE DRAWINGS ARE BASED ON	NAVD88	
NGVD29 TO NAVD88 CONVERSION FACTOR	0.00 NGVD29 = (–)1.60 NAVD88	
MINIMUM FINISHED FLOOR ELEVATION CRITERIA		
FEMA MIN. BASE FLOODPLAIN ELEVATION WITH ASCE 24 MODIFIER	7.00'	7.00'
BROWARD COUNTY 100-YEAR FLOOD ELEVATION	5.50'	7.00'
100-YEAR 3-DAY ZERO DISCHARGE PEAK STAGE	6.11	7.00'
18" ABOVE NEAREST ROAD CROWN ELEVATION - RESIDENTIAL STRUCTURES	N/A	N/A
6" ABOVE NEAREST ROAD CROWN ELEVATION - NON-RESIDENTIAL STRUCTURES	6.50'	7.00'
MINIMUM CROWN OF ROAD ELEVATION CRITERIA		
BROWARD COUNTY 10-YEAR FLOOD ELEVATION	4.40'	5.10'
10-YEAR 1-DAY PEAK STAGE	4.35	5.10'
MINIMUM PERIMETER BERM ELEVATION		
25-YEAR 3-DAY PEAK STAGE	5.51	6.00'

SURVEY DATUM NOTE:

ELEVATIONS SHOWN ON THE PLANS ARE BASED ON THE NORTH AMERICAN VERTICAL DATUM OF 1988 (NAVD 88') OBTAINED FROM THE SURVEY PERFORMED BY PULICE LAND SURVEYORS, INC. (PROJECT #69199), LAST REVISION DATED 12/14/21, RECEIVED 03–08–24.

811 SAFETY IS IN YOUR HANDS. EVERY DIG. EVERY TIME.

JOAQUIN A. MOJICA LICENSE No. 60488 STATE OF FLORIDA PROFESSIONAL ENGINEER

APPROVED : JOAQUIN A. MOJICA, P.E.
FLA. REGISTRATION NO. 60488 DATE : 10/24/2025

PERMIT SET
MUST BE ON JOBSITE AT ALL TIMES DURING CONSTRUCTION

NOTICE
INSPECTION REQUIRED

24 HRS. PRIOR TO COMMENCING ANY WORK IN THE PUBLIC R/W CONTACT THE BROWARD COUNTY HIGHWAY CONSTRUCTION AND ENGINEERING DIVISION AT 954-577-4600 FOR INSPECTION.

NOTE:
APPROVAL OF THIS PLAN DOES NOT CONSTITUTE A PERMIT FOR CONSTRUCTION

A PERMIT FOR CONSTRUCTION MUST BE OBTAINED FROM THE BROWARD COUNTY HIGHWAY CONSTRUCTION AND ENGINEERING DIVISION PRIOR TO COMMENCING CONSTRUCTION IN THE PUBLIC RIGHT OF WAY.

ALL MATERIALS USED AND INSTALLATIONS WITHIN THE PUBLIC RIGHT OF WAY OR EASEMENTS SHALL BE IN ACCORDANCE WITH BROWARD COUNTY HIGHWAY CONSTRUCTION AND ENGINEERING DIVISION SPECIFICATIONS.

BROWARD COUNTY HIGHWAY CONSTRUCTION AND ENGINEERING DIVISION

PLAN CONSISTENT WITH PLAT REQUIREMENTS

PUBLIC RIGHT OF WAY APPROVAL FOR PAVING, GRADING AND DRAINAGE

BY:_____ DATE:_____

DOES NOT INCLUDE APPROVAL OF PAVEMENT MARKING & SIGNS

NO.	DATE	REVISIONS
4	2/12/25	REV. PER CBWCD COMMENTS
3	1/27/25	REV. PER CBWCD COMMENTS
2	12/11/24	REV. PER CBWCD COMMENTS
1	7/22/24	REV. PER DRC COMMENTS
0	5/10/24	REVIEW SET

SUN CREDIT UNION

COOPER CITY, FLORIDA
FOR: SUN CREDIT UNION

SITE PAVING, GRADING, & DRAINAGE PLAN

MILLER LEGG
South Florida Office: 13680 NW 5th Street, Suite 200
Sunrise, Florida - 33325
954-462-8000
www.millerlegg.com

CERTIFICATE OF AUTHORIZATION: LB6680

DES.	DRWN.	CHK.

PROJECT / FILE NO.: 23–00434
DRAWING NO.: C4.0
DATE DRAWN: 2/13/25

V:\PROJECTS\2023\23-00434 - SUN CREDIT UNION\DRAWINGS\23-00434_PGD.DWG by MGRINBANK 2/14/2025 1:49:56 PM

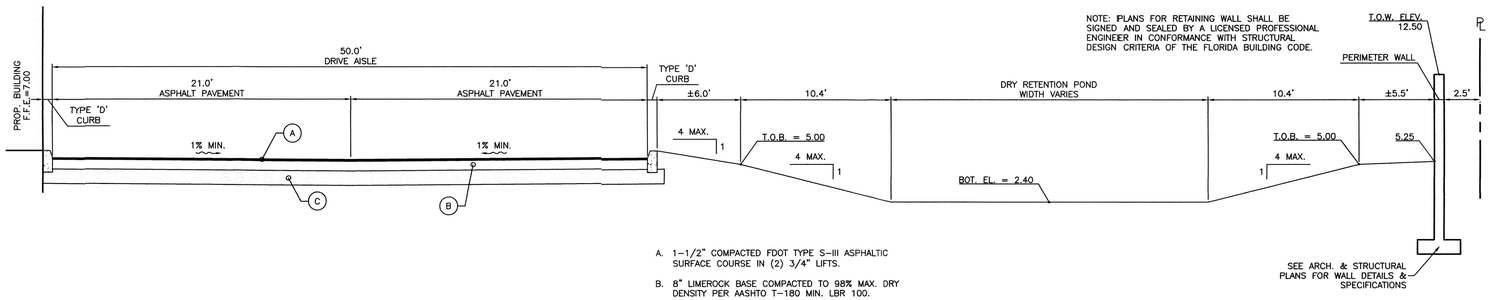

A. 1-1/2" COMPACTED FDOT TYPE S-III ASPHALTIC SURFACE COURSE IN (2) 3/4" LIFTS.

B. 8" LIMEROCK BASE COMPACTED TO 98% MAX. DRY DENSITY PER AASHTO T-180 MIN. LBR 100.

C. 12" STABILIZED SUBGRADE COMPACTED TO 98% MAX. DRY DENSITY PER AASHTO T-180 MIN. LBR 40.

SECTION A-A

SCALE: 1" = 5'

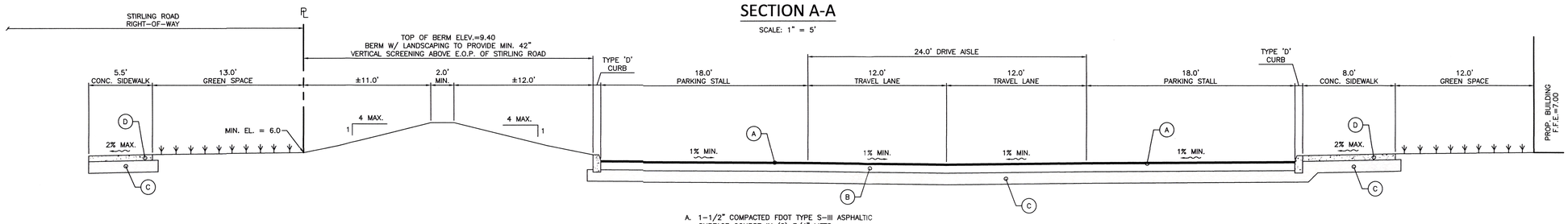

A. 1-1/2" COMPACTED FDOT TYPE S-III ASPHALTIC SURFACE COURSE IN (2) 3/4" LIFTS.

B. 8" LIMEROCK BASE COMPACTED TO 98% MAX. DRY DENSITY PER AASHTO T-180 MIN. LBR 100.

C. 12" STABILIZED SUBGRADE COMPACTED TO 98% MAX. DRY DENSITY PER AASHTO T-180 MIN. LBR 40.

D. 6" CONCRETE SIDEWALK W/ COMPRESSIVE STRENGTH OF 3,000 PSI @ 28 DAYS.

SECTION B-B

SCALE: 1" = 5'

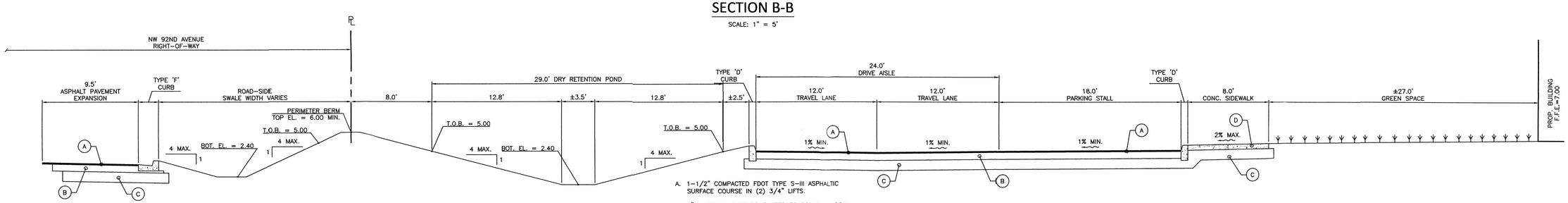

A. 1-1/2" COMPACTED FDOT TYPE S-III ASPHALTIC SURFACE COURSE IN (2) 3/4" LIFTS.

B. 8" LIMEROCK BASE COMPACTED TO 98% MAX. DRY DENSITY PER AASHTO T-180 MIN. LBR 100.

C. 12" STABILIZED SUBGRADE COMPACTED TO 98% MAX. DRY DENSITY PER AASHTO T-180 MIN. LBR 40.

D. 6" CONCRETE SIDEWALK W/ COMPRESSIVE STRENGTH OF 3,000 PSI @ 28 DAYS.

SECTION C-C

SCALE: 1" = 5'

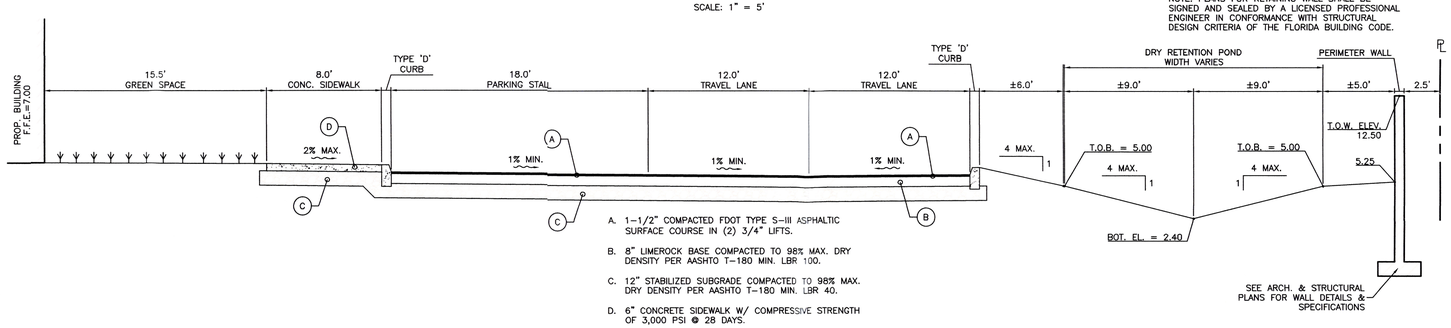

A. 1-1/2" COMPACTED FDOT TYPE S-III ASPHALTIC SURFACE COURSE IN (2) 3/4" LIFTS.

B. 8" LIMEROCK BASE COMPACTED TO 98% MAX. DRY DENSITY PER AASHTO T-180 MIN. LBR 100.

C. 12" STABILIZED SUBGRADE COMPACTED TO 98% MAX. DRY DENSITY PER AASHTO T-180 MIN. LBR 40.

D. 6" CONCRETE SIDEWALK W/ COMPRESSIVE STRENGTH OF 3,000 PSI @ 28 DAYS.

SECTION D-D

SCALE: 1" = 5'

TYPICAL CROSS SECTIONS

NO.	DATE	REVISIONS
3	1/31/25	REV. PER CBWCD COMMENTS
2	7/22/24	REV. PER DRC COMMENTS
1	5/10/24	REVIEW SET

SUN CREDIT UNION

COOPER CITY, FLORIDA
FOR: SUN CREDIT UNION

MILLER LEGG
South Florida Office: 13680 NW 5th Street, Suite 200
Sunrise, Florida 33325
954-436-7000
www.millerlegg.com

CERTIFICATE OF AUTHORIZATION: LB6680

DES	DRWN	CHK
DES.	DWN.	CHK.

PROJECT / FILE NO. 23-00434

DRAWING NO. C4.1

DATE DRAWN: 2/13/25

SAFETY IS IN YOUR HANDS.
EVERY DIG. EVERY TIME.

JOAQUIN A. MOJICA LICENSE No. 60488 STATE OF FLORIDA PROFESSIONAL ENGINEER

APPROVED : JOAQUIN A. MOJICA, P.E.
FLA. REGISTRATION NO. 60488 DATE : 10/24/2025

V:\PROJECTS\2023\23-00434 - SUN CREDIT UNION\DRAWINGS\23-00434_PGD.DWG by MGRINBANK 2/14/2025 1:49:58 PM

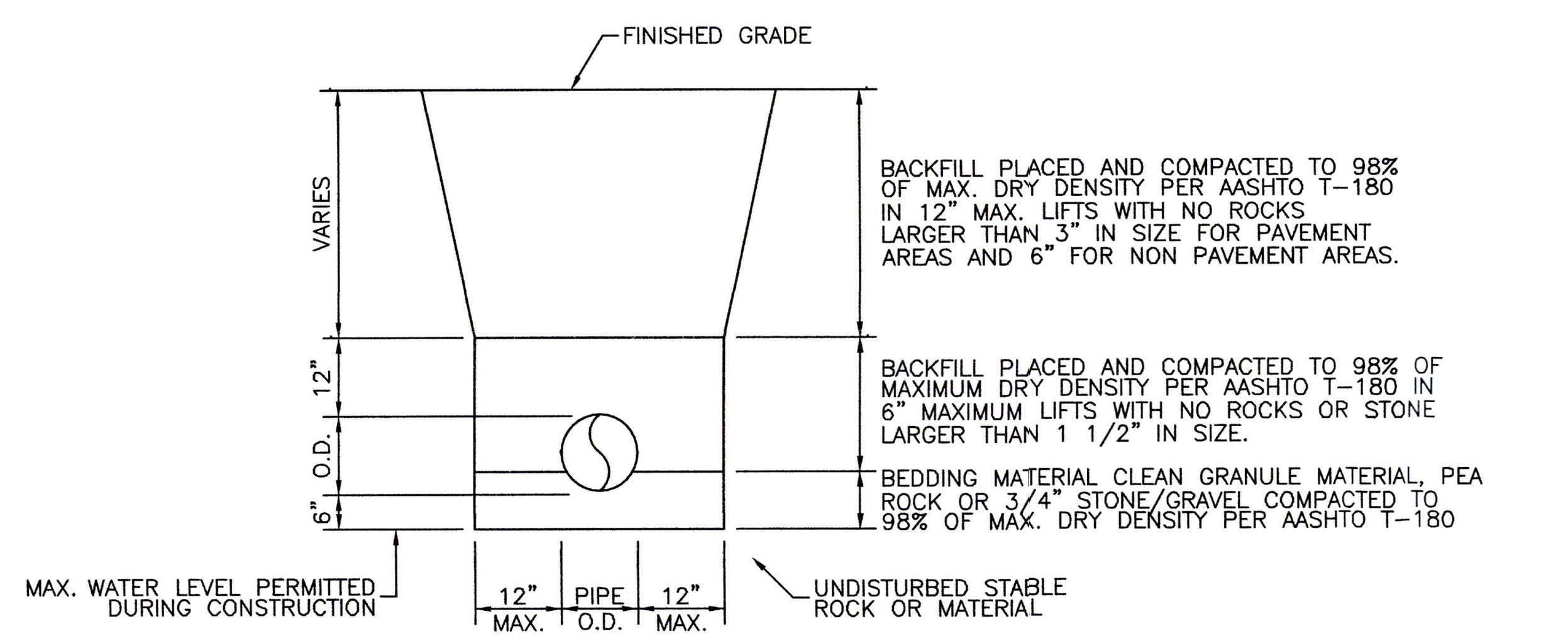

NOTES:

1. WHERE SOILS SIDE SLOPE CONDITIONS CANNOT BE MAINTAINED AS SHOWN ABOVE, PROVIDE APPROVED MEANS OF CONSTRUCTION.
2. WHERE REQUIRED SHEETING AND SHORING SHALL BE IN ACCORDANCE WITH THE LOCAL GOVERNMENTAL AGENCY.
3. MUCK OR OTHER UNSUITABLE MATERIAL WITHIN TRENCH LIMITS SHALL BE COMPLETELY REMOVED AND/OR TO A MINIMUM OF 2 FEET BELOW THE PIPE AND REPLACED WITH CLEAN GRANULE MATERIAL-3/4" ROCK (CLASS 1).
4. WHEN THE PIPE IS LAID IN THE PREPARED TRENCH, TRUE TO LINE AND GRADE, THE PIPE BARREL SHALL RECEIVE CONTINUOUS UNIFORM SUPPORT. WHERE NECESSARY, COURSE SAND, PEA ROCK OR 3/4" LIMESTONE/GRAVEL SHALL BE USED TO PROVIDE UNIFORM BEDDING.
5. JOINTS MAY BE REQUIRED TO BE WRAPPED AT THE DISCRETION OF THE ENGINEER, IF WARRANTED PER UNDERLYING AND THE SOILS CONDITIONS.
6. BACKFILL MATERIAL SHALL BE NON-COHESIVE AND NON-PLASTIC SOIL THAT IS FREE OF ALL DEBRIS, LUMPS, WOOD BROKEN PAVING OR ANY ORGANIC OR UNSUITABLE MATERIAL. BACKFILL MATERIAL PLACED WITHIN 12" OF THE PIPE SHALL CONSIST OF SAND AND GRAVEL. NO ROCKS OR STONES LARGER THAN 1 1/2" IN DIAMETER. ROCKS OR STONES NO LARGER THAN 3" IN DIAMETER WILL BE PERMITTED IN THE REMAINING BACKFILL UNLESS OTHERWISE SPECIFIED.
7. TRENCH BACKFILL SHALL BE COMPACTED TO NOT LESS THAN 98% OF THE MAXIMUM DRY DENSITY DETERMINED BY AASHTO T-180. BACKFILL AND COMPACTION SHALL BE IN ACCORDANCE TO THE STANDARD REQUIRED BY MEMORIAL HEALTHCARE SYSTEMS, IF MORE RESTRICTIVE THAN ABOVE CRITERIA.

TRENCH EXCAVATION DETAIL

N.T.S.

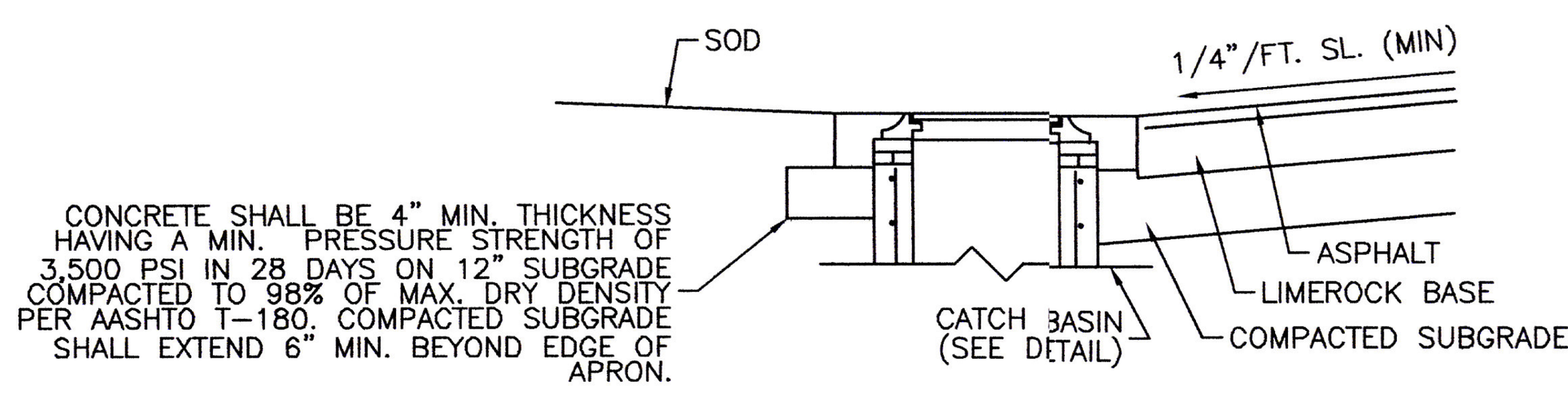

SECTION `A - A'

NOTES:
INLET REFLECTED ABOVE. SAME REQUIREMENTS APPLY TO 'CONCRETE COLLAR' FOR STORM MANHOLES IN GREEN AREA

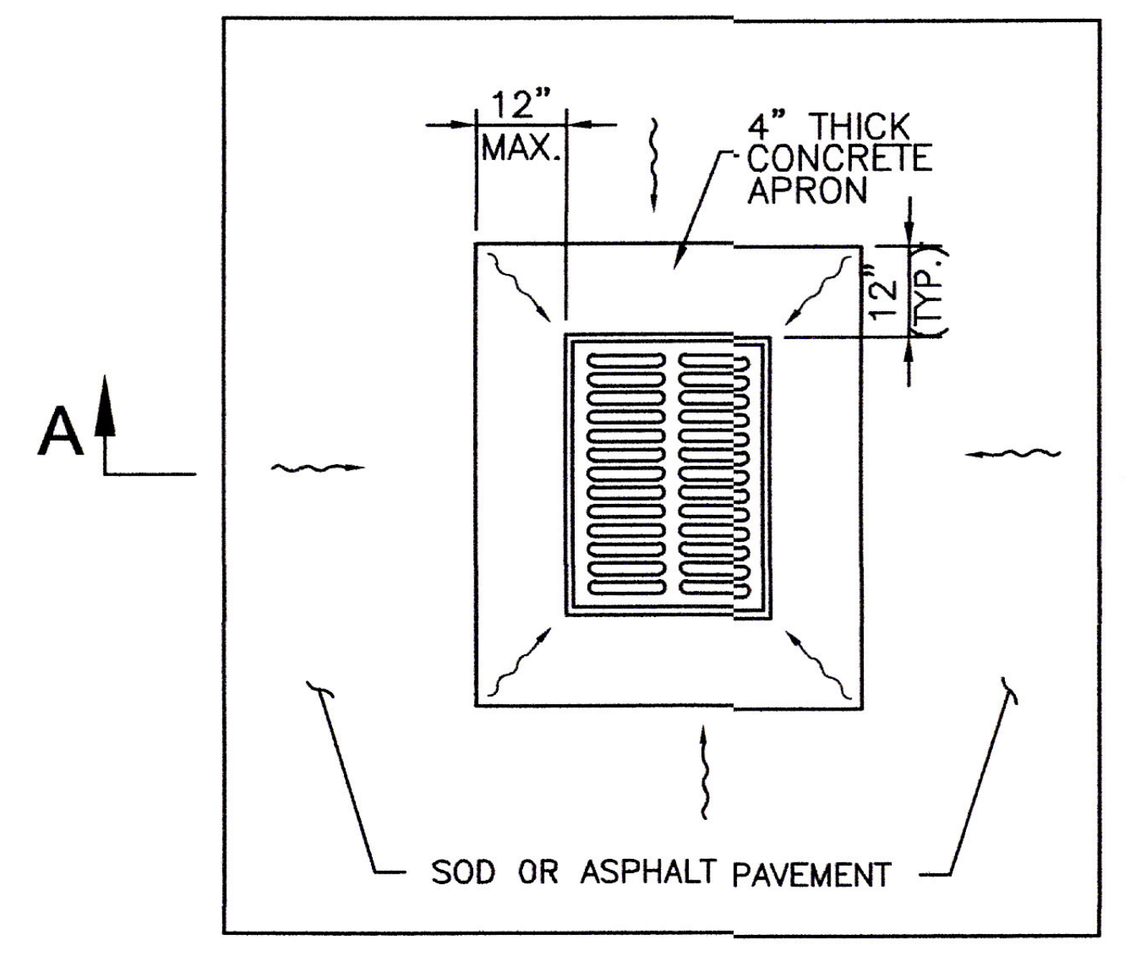

PLAN

CONCRETE APRON/COLLAR

N.T.S

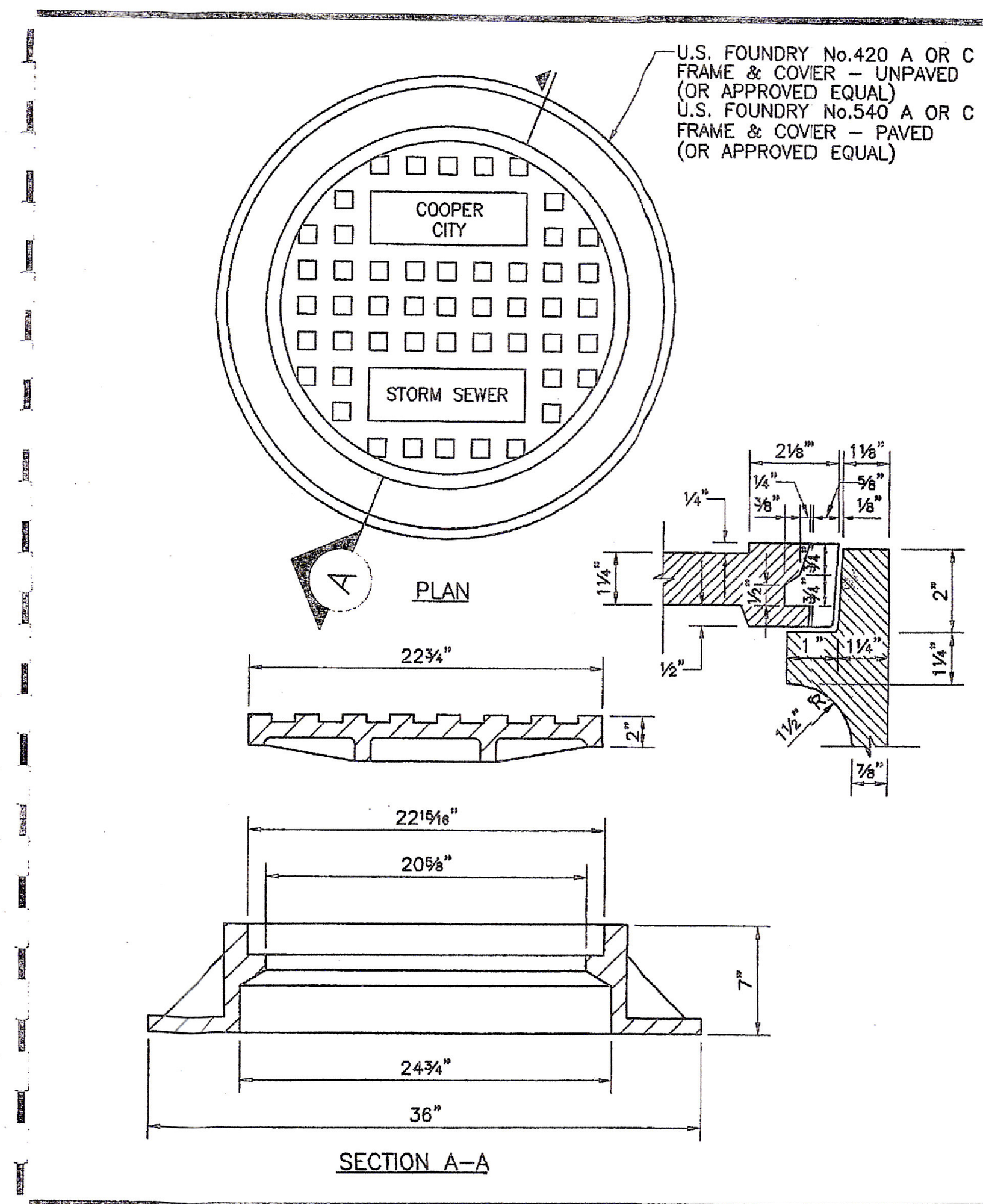

CITY OF COOPER CITY ENGINEERING STANDARDS COOPER CITY, FLORIDA	SCALE: N.T.S. REVISED:	STANDARD STORM DRAINAGE DETAIL STORM SEWER MANHOLE FRAME AND COVER	D-1

Revised October 2022

GENERAL NOTES:

1. CIRCULAR STRUCTURES (ALTERNATES 'A') MAY BE CONSTRUCTED OF CONCRETE OR BRICK, BUT RECTANGULAR STRUCTURES (ALTERNATES 'B' & 'C') SHALL BE CONSTRUCTED OF CONCRETE ONLY. THE CONCRETE MAY BE CAST-IN-PLACE OR PRECAST.
2. WALL REINFORCEMENT AND THICKNESS ARE FOR EITHER CAST-IN-PLACE OR PRECAST CONCRETE EXCEPT THAT FOR PRECAST CIRCULAR UNITS A.S.T.M. SPECIFICATIONS C-76, TABLE III, FOR B WALL REINFORCED CONCRETE PIPE OR PRECAST CIRCULAR UNITS IN ACCORDANCE WITH ASTM SPECIFICATION C-478 WILL BE ACCEPTABLE. TOP AND FLOOR SLAB THICKNESS AND REINFORCEMENT ARE FOR ALL TYPES OF CONSTRUCTION.
3. PRECAST TOP AND/OR FLOOR SLABS MAY BE OF THE SAME CONCRETE AS SPECIFIED IN ASTM SPECIFICATIONS C-478 FOR PRECAST CIRCULAR UNITS.
4. SMOOTH FLOW CHANNELS COMPOSED OF CONCRETE, OR BRICK AND MORTAR, SHALL BE CONSTRUCTED IN THE BOTTOMS OF ALL STRUCTURES TO A DEPTH EQUAL TO HALF THE DIAMETER OF THE LARGEST PIPE.
5. CORNER FILLETS SHOWN FOR RECTANGULAR STRUCTURES ARE NECESSARY ONLY WHEN STRUCTURES ARE USED IN CONJUNCTION WITH CIRCULAR TOPS.
6. STRUCTURES SHALL BE SECURED TO INLET THROATS, RISERS OR MANHOLE TOPS WITH A MINIMUM OF 6-No. 4 BARS 12" LONG.
7. ANY INLET, MANHOLE, OR JUNCTION BOX MAY BE USED IN CONJUNCTION WITH ANY INLET THROAT OR MANHOLE TOP.
8. MORTAR USED TO SEAL THE PIPE IN THE WALLS OF THE PRECAST UNITS SHALL BE OF SUCH A MIX THAT SHRINKAGE WILL NOT CAUSE LEAKAGE INTO OR OUT OF THE UNITS. MAXIMUM OPENING FOR PIPE SHALL BE MAXIMUM REQUIRED O.D. + 6".
9. THE OUTSIDE OF BRICK WALLS SHALL BE PLASTERED WITH 1:2 CEMENT MORTAR.

CITY OF COOPER CITY ENGINEERING STANDARDS COOPER CITY, FLORIDA	SCALE: N.T.S. REVISED:	STANDARD STORM DRAINAGE DETAIL INLET, MANHOLE, & JUNCT. BOX (TYPES P & J)	D-5

Revised October 2022

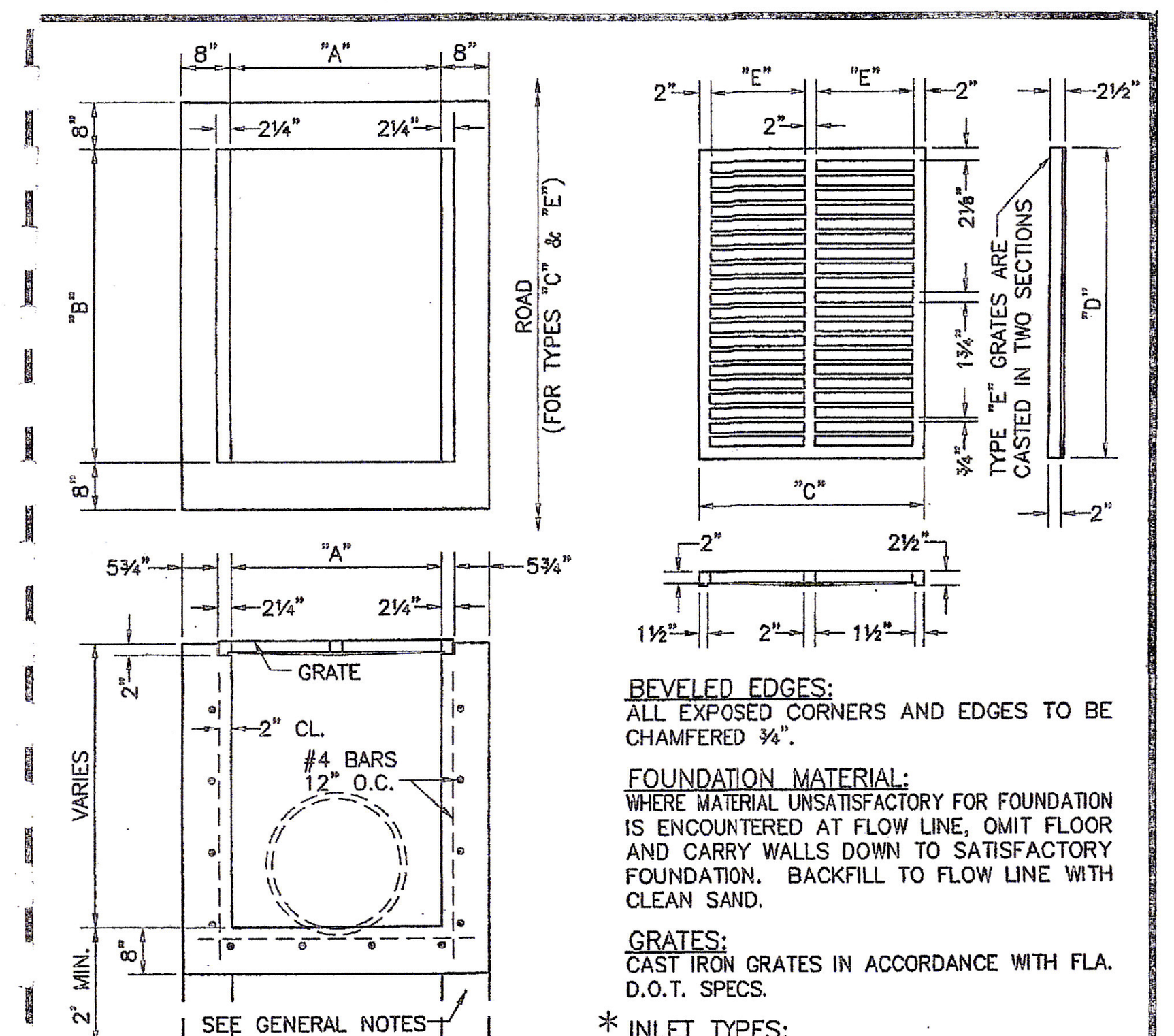

TYPE INLET	"A"	"B"	"C"	"D"	"E"	MAX. SIZE R.C.P.
"C"	2'-0"	3'-1"	2'-4"	3'-0"	11"	18"
"E"	3'-0"	4'-6"	3'-4"	4'-4"	1'-5"	30"
"E MOD"*	3'-0"	4'-6"	3'-4"	4'-4"	1'-5"	48"

NOTE: SEE STD. PLAN FOR DETAILS WHEN USING THIS TYPE INLET WITH VALLEY GUTTER ROAD SECTIONS.

BEVELED EDGES:
ALL EXPOSED CORNERS AND EDGES TO BE CHAMFERED ¾".

FOUNDATION MATERIAL:
WHERE MATERIAL UNSATISFACTORY FOR FOUNDATION IS ENCOUNTERED AT FLOW LINE, OMIT FLOOR AND CARRY WALLS DOWN TO SATISFACTORY FOUNDATION. BACKFILL TO FLOW LINE WITH CLEAN SAND.

GRATES:
CAST IRON GRATES IN ACCORDANCE WITH FLA. D.O.T. SPECS.

* INLET TYPES:
INLETS ARE TO BE AS SHOWN HEREON. TYPE "E MOD." IS A TYPE "E" TURNED 90° TO RECEIVE R.C.P. UP TO 48" DIA. INLETS RECEIVING R.C.P. LARGER THAN 48" DIA. SHALL BE IN ACCORDANCE WITH FLA. D.O.T. STANDARDS.

MATERIAL:
INLET WALLS AND FOOTING MAY EITHER BE POURED-IN-PLACE 2500 LB. CONC.; OR PRECAST CLASS "A" 3000 L.B. CONC.; OR STANDARD MANHOLE BRICK (NO BLOCK) WITH ½" PLASTER (NO LIME) WITH 8" PRECAST CAP.

CITY OF COOPER CITY ENGINEERING STANDARDS COOPER CITY, FLORIDA	SCALE: N.T.S. REVISED:	STANDARD STORM DRAINAGE DETAIL STORM SEWER INLETS	D-7

Revised October 2022

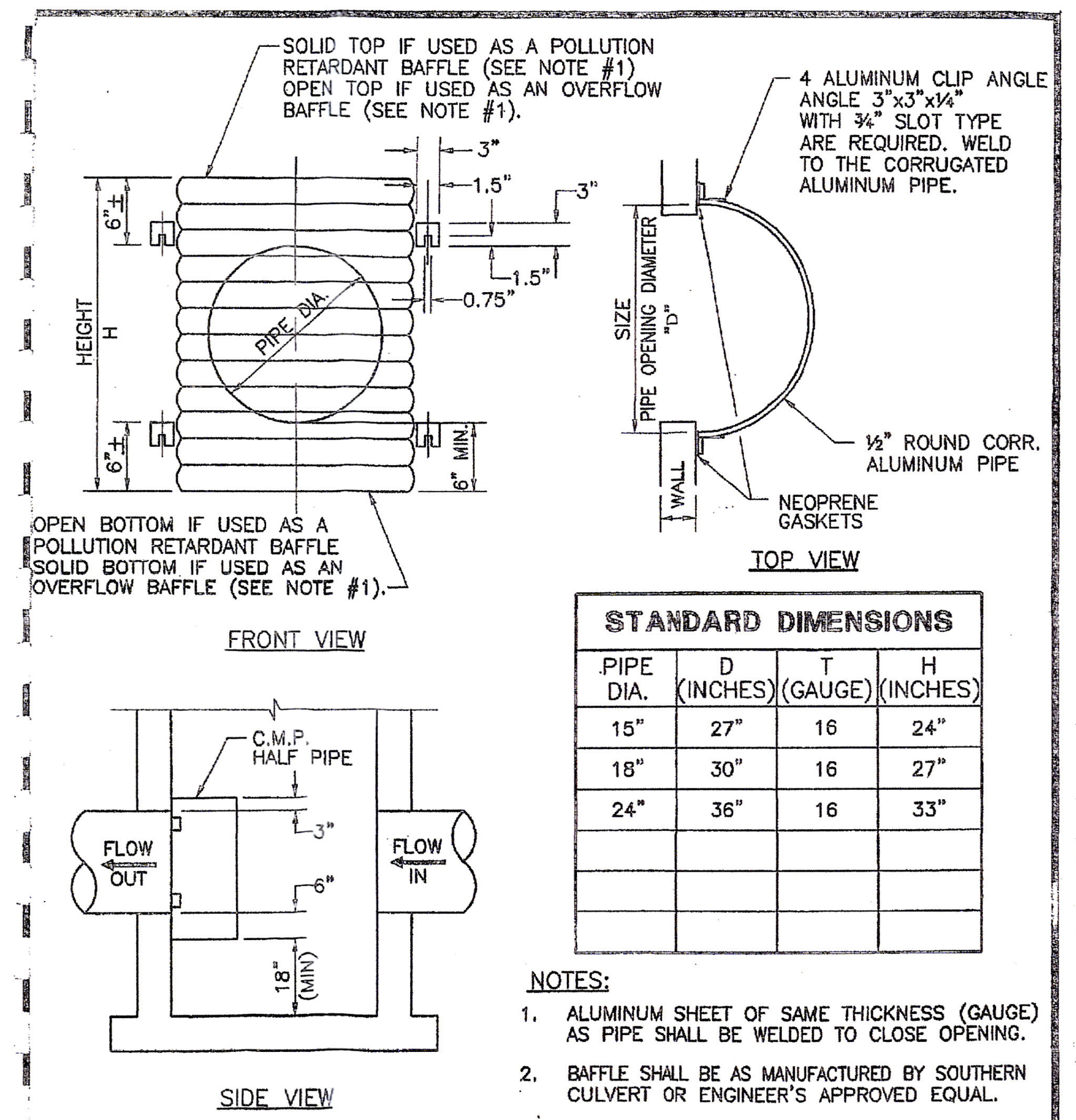

STANDARD DIMENSIONS

PIPE DIA.	D (INCHES)	T (GAUGE)	H (INCHES)
15"	27"	16	24"
18"	30"	16	27"
24"	36"	16	33"

NOTES:

1. ALUMINUM SHEET OF SAME THICKNESS (GAUGE) AS PIPE SHALL BE WELDED TO CLOSE OPENING.
2. BAFFLE SHALL BE AS MANUFACTURED BY SOUTHERN CULVERT OR ENGINEER'S APPROVED EQUAL.
3. NEOPRENE GASKET (⅜" X 2") SHALL BE INSTALLED AT ALL BAFFLES.
4. MIN. 24" SEPARATION BETWEEN OUTSIDE OF PRB & INTERIOR WALL OR ADJACENT PRB.

CITY OF COOPER CITY ENGINEERING STANDARDS COOPER CITY, FLORIDA	SCALE: N.T.S. REVISED:	STANDARD STORM DRAINAGE DETAIL POLLUTION RETARDANT BAFFLE	D-9

Revised October 2022

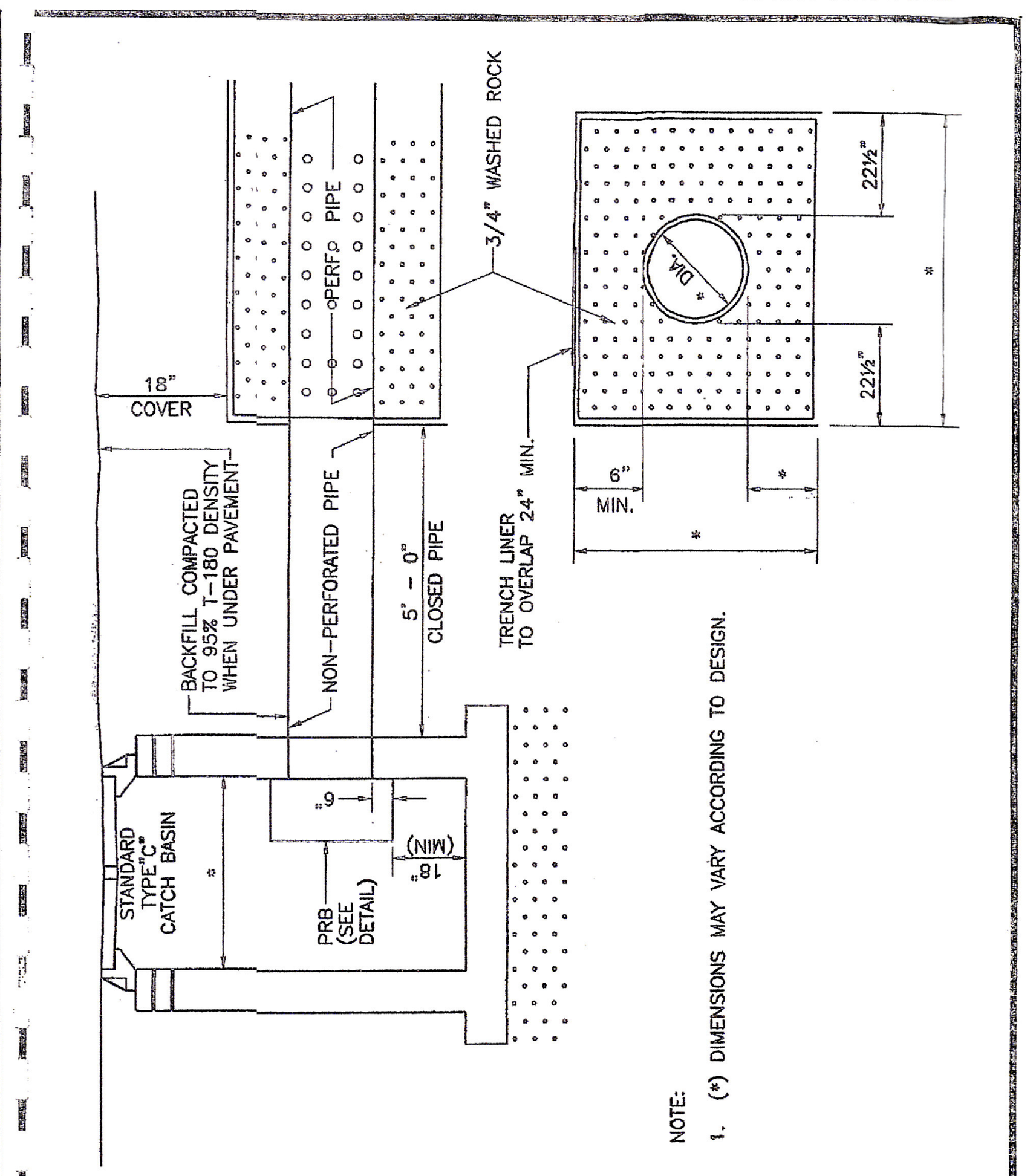

NOTE:
1. (*) DIMENSIONS MAY VARY ACCORDING TO DESIGN.

CITY OF COOPER CITY ENGINEERING STANDARDS COOPER CITY, FLORIDA	SCALE: N.T.S. REVISED:	STANDARD STORM DRAINAGE DETAIL EXFILTRATION TRENCH	D-10

Revised October 2022

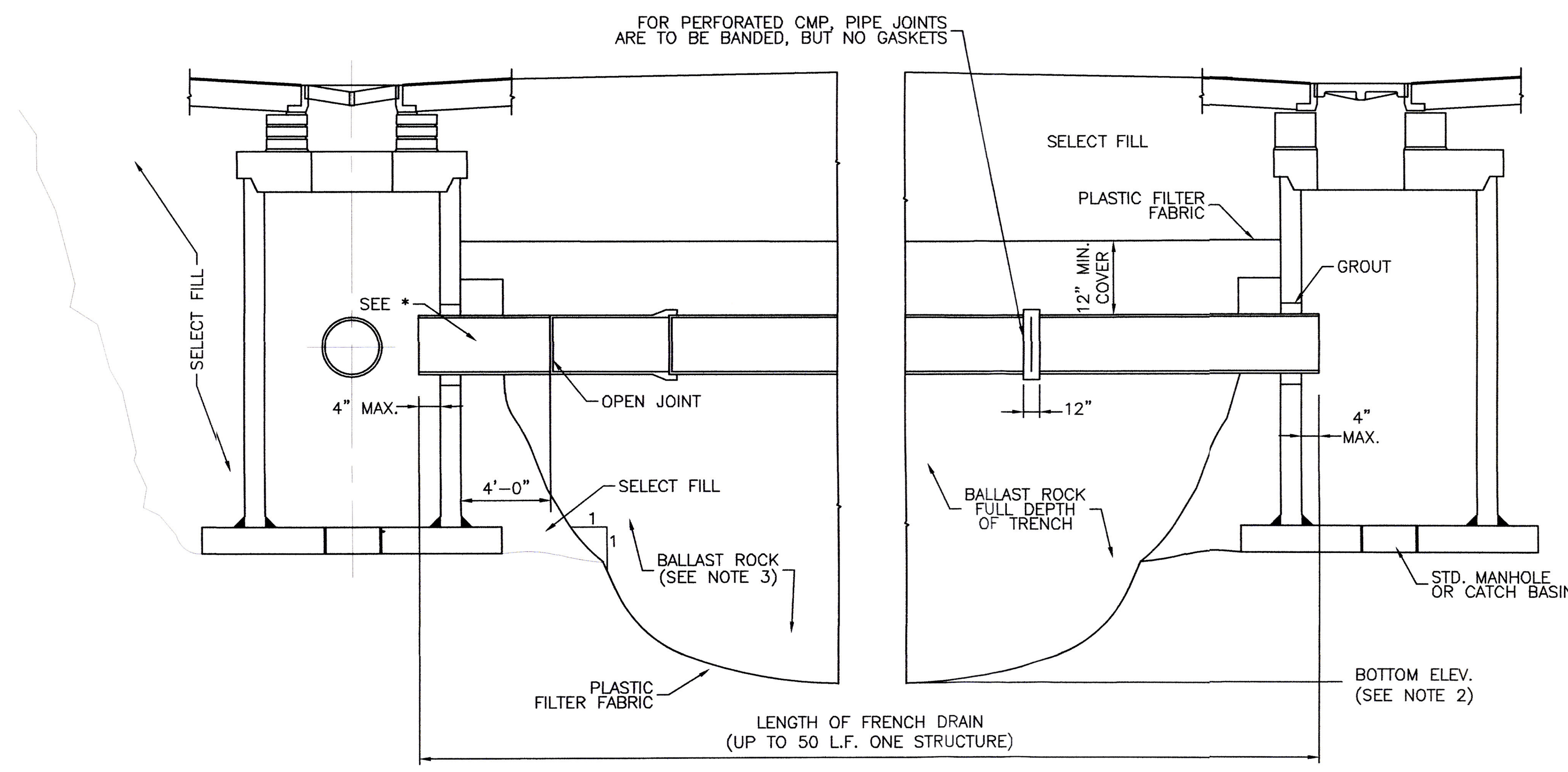

LONGITUDINAL SECTION

N.T.S.

* NO SLOTS OR PERFORATIONS ON THIS LENGTH OF PIPE

NOTES:

1. PLASTIC FILTER FABRIC (AT EA. SIDE) SHALL BE USED IN SANDY AREAS AS NOTED ON PLANS AND/OR AS DIRECTED BY THE ENGINEER.
2. THE BOTTOM OF THE EXFILTRATION TRENCH SHALL BE (-) 1.70'.
3. AFTER THE BALLAST ROCK HAS BEEN PLACED TO THE PROPER ELEVATION, IT SHALL BE CAREFULLY WASHED DOWN WITH CLEAN WATER IN ORDER TO ALLOW FOR INITIAL SETTLEMENT THAT MAY OCCUR. IF IT DOES TAKE PLACE, ADDITIONAL BALLAST ROCK WILL BE ADDED TO RESTORE THE BALLAST ROCK TO THE PROPER ELEVATION, SO THAT THE EXFILTRATION TRENCH BE COMPLETED IN ACCORDANCE WITH THE DETAILS.
4. INVERT ELEVATION OF PIPES SHALL BE 0.50' N.A.V.D.

EXFILTRATION TRENCH SECTION DETAIL

N.T.S.

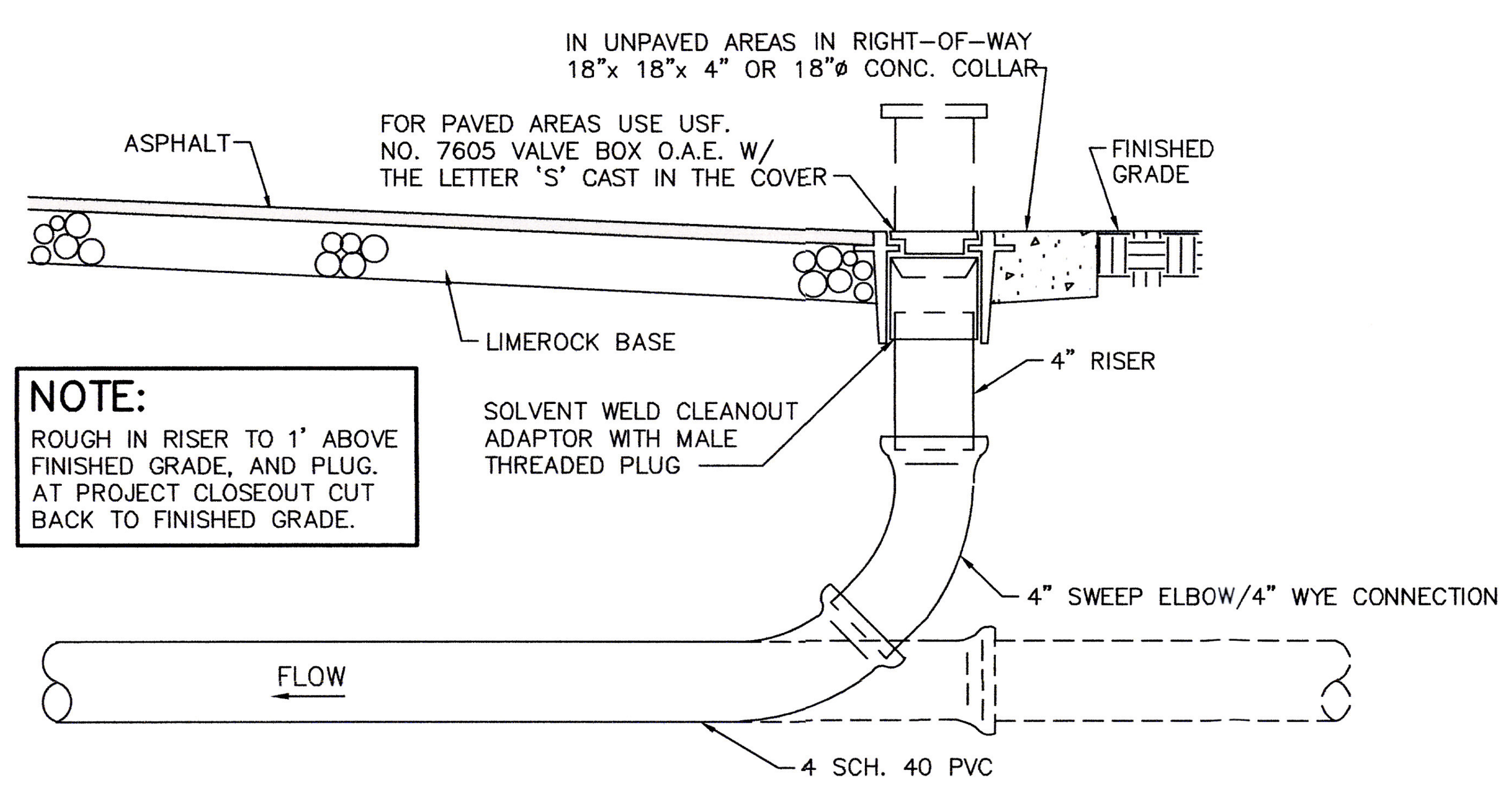

NOTE:
ROUGH IN RISER TO 1' ABOVE FINISHED GRADE, AND PLUG. AT PROJECT CLOSEOUT CUT BACK TO FINISHED GRADE.

INLINE/TERMINAL CLEANOUT DETAIL

N.T.S.

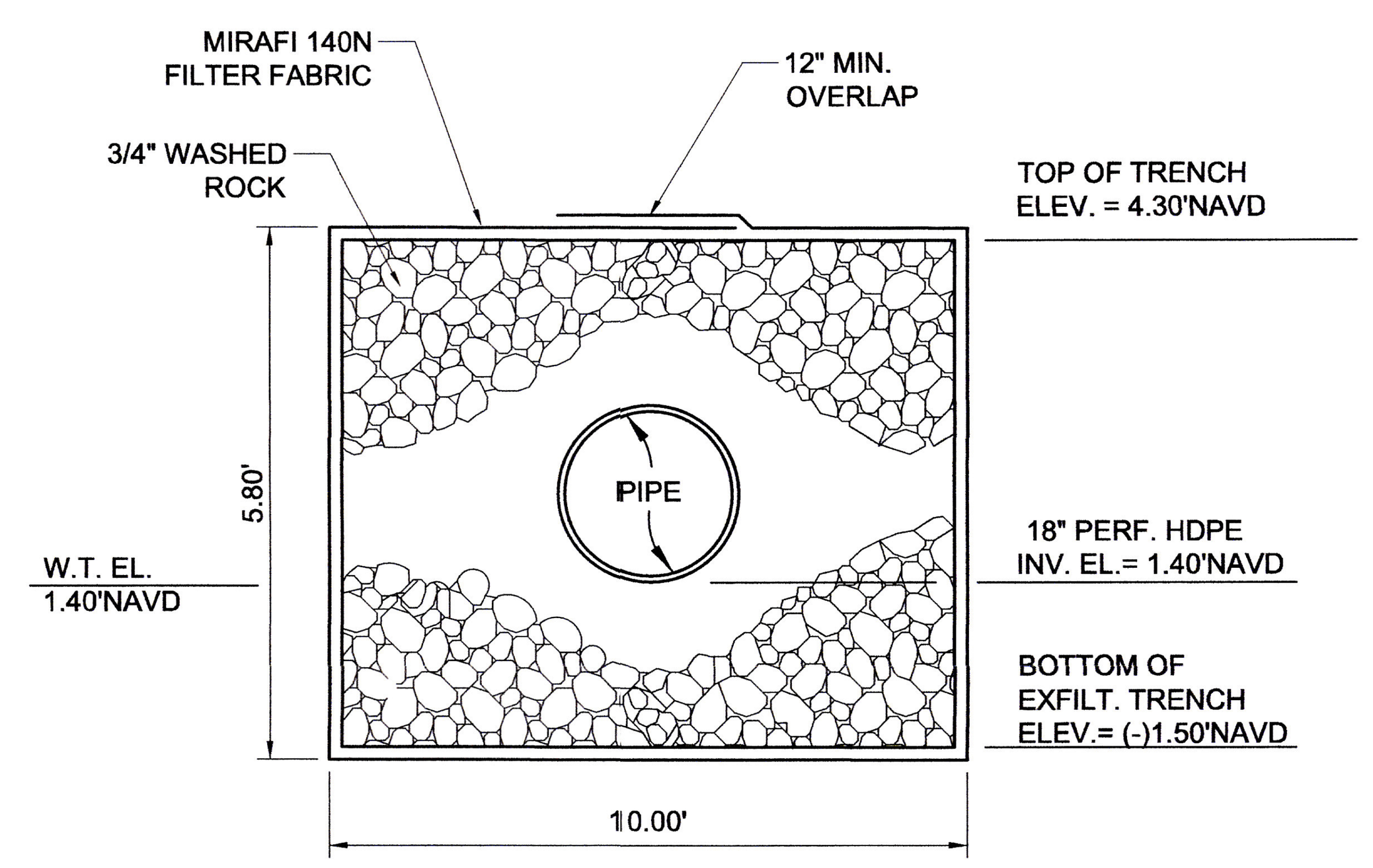

EXFILTRATION TRENCH DETAIL

N.T.S.

811
SAFETY IS IN YOUR HANDS. EVERY DIG. EVERY TIME.

JOAQUIN A. MOJICA LICENSE No. 60488 STATE OF FLORIDA PROFESSIONAL ENGINEER

APPROVED : JOAQUIN A. MOJICA, P.E.
FLA. REGISTRATION NO. 60488 DATE : 10/24/2025

NO.	DATE	REVISIONS
1	7/22/24	REV. PER DRC COMMENTS
	5/10/24	REVIEW SET

SUN CREDIT UNION

COOPER CITY, FLORIDA
FOR: SUN CREDIT UNION

DRAINAGE DETAILS

MILLER LEGG
South Florida Office: 13680 NW 5th Street, Suite 200
Sunrise, Florida · 33325
954-436-7000
www.millerlegg.com

CERTIFICATE OF AUTHORIZATION: LB6680

DES	DRWN	CHK

PROJECT / FILE NO. 23-00434
DRAWING NO. C4.2
DATE DRAWN: 2/13/25

V:\PROJECTS\2023\23-00434 - SUN CREDIT UNION\DRAWINGS\23-00434_PGD.DWG by MGRINBANK 2/14/2025 1:49:58 PM

GENERAL NOTES:

1. Provide flared end sections meeting the requirements of ASTM C76 with the exception that dimensions and reinforcement meet the criteria in the table on sheet 2. Circumferential reinforcement may consist of either one cage or two cages of steel. Use concrete compressive strength of 4000 psi.

2. Connections between the flared end section and the pipe culvert may be any of the following types unless otherwise shown on the plans.

   a. Joints meeting the requirements of Section 449 of the Standard Specifications O-Ring Gasket Flared end section joint dimensions and tolerances shall be identical or compatible to those used in the pipe culvert joint. When pipe culvert and flared end section manufacturers are different, the manufacturer of the flared end sections must certify the compatibility of joint designs.

   b. Joints sealed with preformed plastic gaskets. Use gaskets that meet the requirements Specification 942-2 of the Standard Specifications and the minimum sizes for gaskets as specified for equivalent sizes of elliptical pipe.

   c. Reinforced concrete jackets, as detailed on sheet 2. When non-round corrugated metal pipe is called for in the Plans, use bituminous coated pipe in the jackets area as specified on Index 430-001. Construct concrete jacket as specified in Index 430-001.

3. Cast Toe Walls in place using Class II Concrete.

4. On skewed pipe culverts place the flared end sections in line with the pipe culvert. Warp the side slopes as required to fit the flared end sections.

5. Quantities shown are for estimating purposes only.

TABLE OF CONTENTS:

Sheet	Description
1	General Notes and Contents
2	Straight Flare, Optional Shape Details, and Reinforced Concrete Jacket Detail

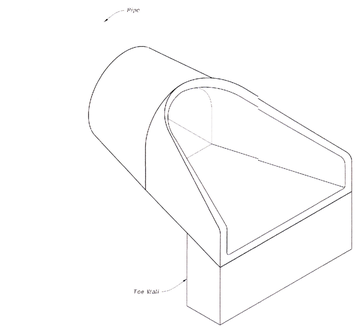

FLARED END SECTION

LAST REVISION 11/01/21	DESCRIPTION:	FY 2023-24 STANDARD PLANS	FLARED END SECTION	INDEX 430-020	SHEET 1 of 2

Pipe Dia	T	Reinf. sq. in. Per Foot	Bell or Spigot	A	B	C	D	E	Y	R 1	R 2	FLAT	n	Toe Wall Class II Conc. (CY.)
12"	2"	0.07	1¾"	4'	2'-0"	4'-0½"	6'-0½"	2'-0"	19°-½"	10½"	9"	3½"	12"	.06
15"	2½"	0.07	2"	6"	2'-3"	3'-10"	6'-1"	2'-6"	24°-½"	12½"	11"	3½"	12"	.07
18"	2½"	0.07	2½"	9"	2'-3"	3'-10"	6'-1"	3'-0"	29°	15½"	12"	4"	15"	.11
21"	2½"	0.07	2½"	9"	2'-11"	3'-2"	6'-1"	3'-6"	31°½"	16½"	13"	4"	15"	.12
24"	3"	0.07	2½"	9½"	2'-11½"	3'-0"	6'-11½"	4'-0"	33°-½"	18°-½"	14"	4½"	18"	.17
27"	3½"	0.148	2½"	10½"	3'-0"	2'-10½"	6'-11½"	4'-6"	38°	18°-½"	14½"	4½"	18"	.19
30"	3½"	0.148	3"	1'-0"	3'-0"	2'-10½"	6'-11½"	5'-0"	37°	18½"	15"	5"	21"	.24
36"	4"	0.148	3½"	1'-3"	3'-3"	2'-10½"	6'-11½"	6'-0"	43°-½"	21°-½"	17"	5½"	21"	.39
42"	4½"	0.148	3½"	1'-6"	3'-3"	2'-11"	6'-2"	6'-6"	43°-½"	21°-½"	17"	5½"	24"	.36
48"	5"	0.148	4½"	1'-9"	3'-6"	2'-2"	6'-2"	7'-0"	46°½"	24°-½"	19"	5½"	24"	.39
54"	5½"	0.174	4½"	2'-3"	3'-3"	2'-11"	8'-4"	7'-6"	45°½"	23½"	24"	6½"	24"	.42
60"	6"	0.174	5"	2'-6"	3'-6"	3'-3"	8'-3"	8'-0"	42°½"	26°½"	24"	6½"	24"	.44
66"	6½"	0.174	5½"	2'-0"	6'-6"	1'-9"	8'-3"	8'-6"	7.2°	36½"	24"	7½"	24"	.47
72"	7"	0.174	6"	2'-0"	6'-6"	1'-9"	8'-3"	9'-0"	7.7°½"	38°½"	24"	7½"	24"	.50

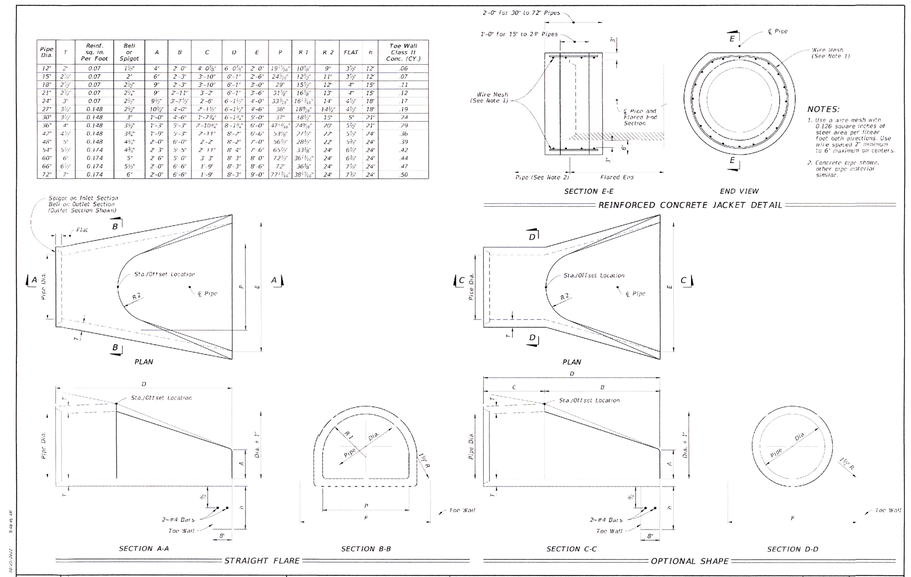

LAST REVISION 11/01/21	DESCRIPTION:	FY 2023-24 STANDARD PLANS	FLARED END SECTION	INDEX 430-020	SHEET 2 of 2

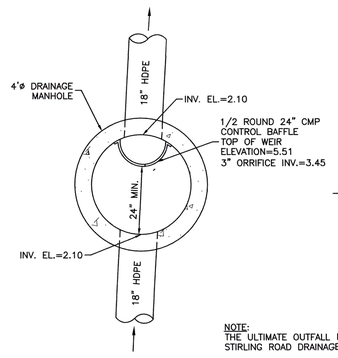

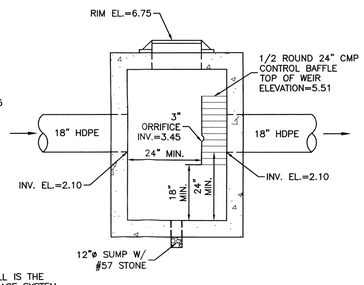

NOTE:
THE ULTIMATE OUTFALL IS THE STIRLING ROAD DRAINAGE SYSTEM

CONTROL STRUCTURE #32 DETAIL

N.T.S.

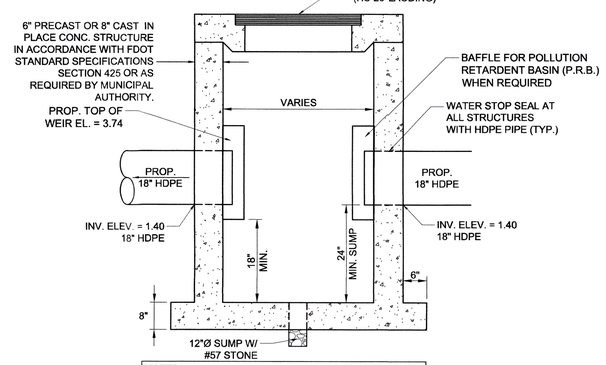

NOTES:
1. STRUCTURE MANUFACTURER AND/OR CONTRACTOR SHALL CONFIRM ALL STEEL REINFORCEMENT MEETS FDOT STANDARDS PER INDEX 425-010, SECTION 415 AND 425 PRIOR TO SUBMITTING ANY SHOP DRAWINGS FOR APPROVAL.
2. LOCKING GRATES TO BE PROVIDED.

CONTROL STRUCTURE DATA TABLE					
STRUCTUR NO.	STRUCTURE TYPE	GRATE ELEV.	INV. ELEV.	PRB	WEIR
1	4' ø CB	5.10	1.40 (E,SE)	(W)	(SE) TOP.=3.40
3	5' ø CB	5.10	1.40 (S,E,SW)	(S,E)	(SW) TOP.=3.40
5	4' ø CB	5.10	1.40 (N,SW) 1.50 (E)	(N)	(SW) TOP.=3.40

CONTROL STRUCTURE DETAIL STRUCTURES #1, #3 AND #5

N.T.S.

NO.	DATE	REVISIONS	BY
4	2/12/25	REV. PER CBWCD COMMENTS	
3	1/31/25	REV. PER CBWCD COMMENTS	
2	12/11/24	REV. PER CBWCD COMMENTS	
1	7/22/24	REV. PER DRC COMMENTS	
0	5/10/24	REVIEW SET	

SUN CREDIT UNION

COOPER CITY, FLORIDA
FOR: SUN CREDIT UNION

DRAINAGE DETAILS

MILLER LEGG
South Florida Office: 13680 NW 5th Street, Suite 200
Sunrise, Florida - 33325
954-436-7000
www.millerlegg.com

CERTIFICATE OF AUTHORIZATION: LB6680

DES	DRWN	CHK
DES.	DWN.	CHK.

PROJECT / FILE NO. 23-00434

DRAWING NO. C4.3

DATE DRAWN: 2/13/25

SAFETY IS IN YOUR HANDS.
EVERY DIG. EVERY TIME.

JOAQUIN A. MOJICA LICENSE No. 60488 STATE OF FLORIDA PROFESSIONAL ENGINEER

APPROVED : JOAQUIN A. MOJICA, P.E.
FLA. REGISTRATION NO. 60488 DATE : 10/24/2025

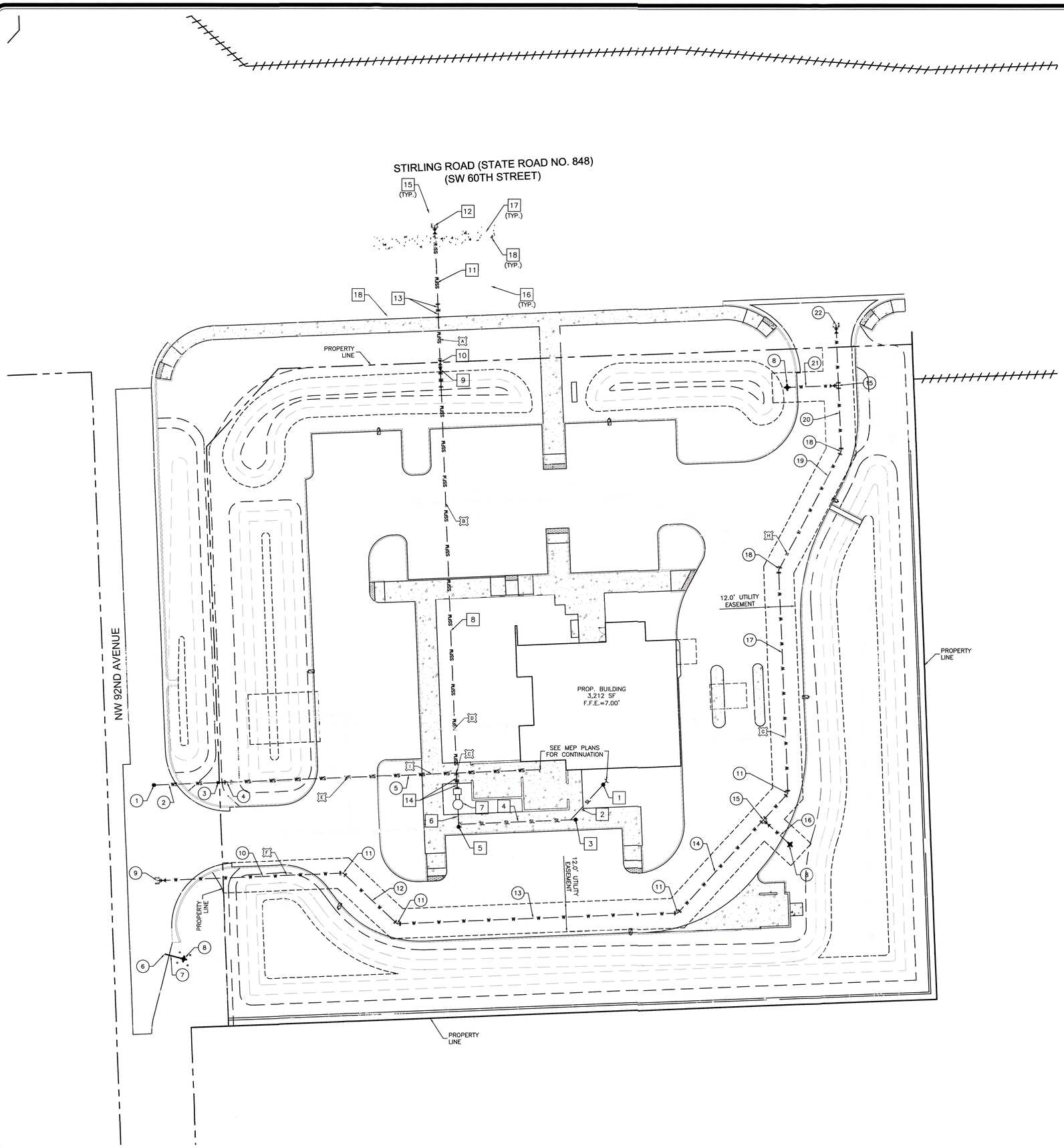

GRAPHIC SCALE

0 10 20 40

(IN FEET)
1 INCH = 20 FEET

UTILITY NOTES:

1. CONTRACTOR TO VERIFY EXACT LOCATION AND ELEVATION OF ALL EXISTING UTILITIES AT ALL CROSSING AND CONNECTION POINTS PRIOR TO THE COMMENCEMENT OF ANY CONSTRUCTION RELATED ACTIVITIES. NOTIFY ENGINEER IMMEDIATELY IF ANY DISCREPANCIES.
2. CONTRACTOR SHALL REFER TO MEP PLANS (BY OTHERS) FOR EXACT POINTS OF CONNECTION FOR DOMESTIC WATER SERVICE AND SANITARY SEWER LATERALS.
3. POTABLE WATER SHALL NOT BE USED FOR IRRIGATION PURPOSES.
4. WATER MAINS AND FIRE HYDRANTS SHALL BE INSTALLED PRIOR TO CONSTRUCTION.

AVERAGE DAILY FLOWS:

PROJECTED AVERAGE DAILY WATER AND WASTEWATER FLOWS ARE AS FOLLOWS:
CREDIT UNION (OFFICE BUILDING): 0.20 GPD PER SF OF FLOOR SPACE =
3,212 SF X 0.20 GPD = 642.4 GPD

WATER CALLOUTS:

1. CONNECT TO EXIST. 6" WATER MAIN W/ PROP. 1-1/2" CORPORATION STOP
2. PROP. 26 LF 1-1/2" PE DOMESTIC WATER LINE
3. PROP. 1-1/2" WATER METER
4. PROP. 1-1/2" R.P.Z. BACKFLOW PREVENTER
5. PROP. 126 LF 1-1/2" PE DOMESTIC WATER LINE
6. CONNECT TO EXIST. 6" HYDRANT LINE W/ PROP. 6" DIP HYDRANT LINE
7. PROP. 8 LF 6" DIP HYDRANT LINE
8. PROP. FIRE HYDRANT ASSEMBLY
9. CONNECT TO EXIST. 6" WATER MAIN W/ PROP. 6"x6" TAPPING SLEEVE & VALVE
10. PROP. 75 LF 8" PVC WATER MAIN
11. PROP. 8" 45° BEND
12. PROP. 30 LF 8" PVC WATER MAIN
13. PROP. 113 LF 8" PVC WATER MAIN
14. PROP. 65 LF 8" PVC WATER MAIN
15. PROP. 8"x6" REDUCING TEE & 6" GATE VALVE
16. PROP. 16 LF 6" DIP HYDRANT LINE
17. PROP. 90 LF 8" PVC WATER MAIN
18. PROP. 8" 22.5° BEND
19. PROP. 54 LF 8" PVC WATER MAIN
20. PROP. 51 LF 8" PVC WATER MAIN
21. PROP. 21 LF 6" DIP HYDRANT LINE
22. CONNECT TO EXIST. WATER MAIN W/ PROP. X"x8" TAPPING SLEEVE & VALVE

SEWER CALLOUTS:

1. PROP. PRIVATE CLEANOUT
R.E. = 6.50
I.E.(SW,NE) = 2.75
2. PROP. PRIVATE 20 LF 6" SCH. 40 PVC SAN. SWR. LATERAL @ 1.00% MIN.
3. PROP. PRIVATE CLEANOUT
R.E. = 6.43
I.E.(W,NE) = 2.55
4. PROP. PRIVATE 47 LF 6" SCH. 40 PVC SAN. SWR. LATERAL @ 1.00% MIN.
5. PROP. PRIVATE CLEANOUT
R.E. = 6.10
I.E.(E,N) = 2.08
6. PROP. PRIVATE 9 LF 6" SCH. 40 PVC SAN. SWR. LATERAL @ 1.00% MIN.
7. PROP. PRIVATE DUPLEX GRINDER LIFT STATION (SEE SHEET C5.3 FOR DETAILS)
R.E. = 6.55
I.E.(S) = 1.95
I.E.(N) = 3.00
8. PROP. PRIVATE 169 LF 2" HDPE SAN. SWR. FORCE MAIN
9. PROP. PRIVATE 4"x2" REDUCER
10. PROP. PUBLIC 4" PLUG VALVE @ PROPERTY LINE
11. PROP. PUBLIC 55 LF 4" DIP SAN. SWR. FORCE MAIN
12. CONNECT TO EXIST. PUBLIC 16" SAN. SWR. FORCE MAIN W/ PROP. PUBLIC 16"x4" TAPPING SLEEVE & VALVE
13. PROP. PUBLIC 4" 45° VERTICAL BEND
14. PROP. PRIVATE 2" 45° VERTICAL BEND
15. ASPHALT RESTORATION PER FDOT INDEX 105-001 – APPROXIMATELY 800 SF 1.25" FC-9.5 FC, 2.0" SP-9.5 SC AND 12" TYPE B STABILIZATION (LBR 40) (SEE SHEET C3.1)
16. MILL & RESURFACE PER FDOT INDEX 105-001 – APPROXIMATELY 1,400 SF 1.25" FC-9.5 FC (SEE SHEET C3.1)
17. RESTORE APPROXIMATELY 250 SF OF CONCRETE MEDIAN PER FDOT INDEX 520-020 (SEE SHEET C3.1)
18. RESTORE APPROXIMATELY 100 LF OF TYPE "F" CURB & GUTTER PER FDOT INDEX 520-001

CROSSING DATA:

A. FINISHED GRADE ELEV.: 6.30
PROP. 4" SAN. SWR. FORCE MAIN UNDER EXIST. WATER MAIN
EXIST. WATER MAIN B.O.P.=±0.28
PROP. 4" SAN. SWR. FORCE MAIN T.O.P.=(–)0.72
CLEARANCE=1.00'

B. FINISHED GRADE ELEV.: 5.35
PROP. 2" SAN. SWR. FORCE MAIN UNDER PROP. 18" STORM DRAINAGE LINE
PROP. 18" STORM DRAINAGE LINE B.O.P.=1.40
PROP. 2" SAN. SWR. FORCE MAIN T.O.P.=0.90
CLEARANCE=0.50'

C. FINISHED GRADE ELEV.: 6.30
PROP. 2" SAN. SWR. FORCE MAIN UNDER PROP. 1-1/2" DOMESTIC WATER LINE
PROP. 1-1/2" DOMESTIC WATER LINE B.O.P.=4.15
PROP. 2" SAN. SWR. FORCE MAIN T.O.P.=3.15
CLEARANCE=1.00'

D. FINISHED GRADE ELEV.: 6.50
PROP. 6" SAN. SWR. FORCE MAIN UNDER PROP. 6" ROOF DRAINAGE LINE
PROP. 6" ROOF DRAINAGE LINE B.O.P.=4.79
PROP. 2" SAN. SWR. FORCE MAIN T.O.P.=3.15
CLEARANCE=1.64'

E. FINISHED GRADE ELEV.: 5.25
PROP. 1-1/2" DOMESTIC WATER LINE UNDER PROP. 18" STORM DRAINAGE LINE
PROP. 18" STORM DRAINAGE LINE B.O.P.=1.40
PROP. 1-1/2" DOMESTIC WATER LINE T.O.P.=0.90
CLEARANCE=0.50'

F. FINISHED GRADE ELEV.: 5.55
PROP. 18" STORM DRAINAGE LINE UNDER PROP. 8" WATER MAIN
PROP. 8" WATER MAIN B.O.P.=1.80
PROP. 18" STORM DRAINAGE LINE T.O.P.=0.25
CLEARANCE=1.55'

G. FINISHED GRADE ELEV.: 5.80
PROP. 8" WATER MAIN UNDER PROP. 4" STORM DRAINAGE LINE
PROP. 4" STORM DRAINAGE LINE B.O.P.=5.53
PROP. 8" WATER MAIN T.O.P.=2.75
CLEARANCE=2.78'

H. FINISHED GRADE ELEV.: 5.50
PROP. 8" WATER MAIN UNDER PROP. 18" STORM DRAINAGE LINE
PROP. 18" STORM DRAINAGE LINE B.O.P.=1.25
PROP. 8" WATER MAIN T.O.P.=0.75
CLEARANCE=0.50'

I. FINISHED GRADE ELEV.: 6.15
PROP. 1-1/2" DOMESTIC WATER LINE UNDER PROP. 6" STORM DRAINAGE LINE
PROP. 6" STORM DRAINAGE LINE B.O.P.=4.57
PROP. 1-1/2" DOMESTIC WATER LINE T.O.P.=0.90
CLEARANCE=3.67'

SURVEY DATUM NOTE:

ELEVATIONS SHOWN ON THE PLANS ARE BASED ON THE NORTH AMERICAN VERTICAL DATUM OF 1988 (NAVD 88') OBTAINED FROM THE SURVEY PERFORMED BY PULICE LAND SURVEYORS, INC. (PROJECT #69199), LAST REVISION DATED 12/14/21, RECEIVED 03-08-24.

811 SAFETY IS IN YOUR HANDS. EVERY DIG. EVERY TIME.

JOAQUIN A. MOJICA LICENSE No. 60488 STATE OF FLORIDA PROFESSIONAL ENGINEER

APPROVED : JOAQUIN A. MOJICA, P.E.
FLA. REGISTRATION NO. 60488 DATE : 10/24/2025

NO.	DATE	REVISIONS	BY
1	7/22/24	REV. PER DRC COMMENTS	SRS
2	5/10/24	REVIEW SET	SRS

SUN CREDIT UNION

COOPER CITY, FLORIDA
FOR: SUN CREDIT UNION

MILLER LEGG
South Florida Office: 13880 NW 5th Street, Suite 200
Sunrise, Florida 33325
954-438-7000
www.millerlegg.com

CERTIFICATE OF AUTHORIZATION: LB6680

DES	DRWN	CHK
DES.	DWN.	CHK.

PROJECT / FILE NO.: 23-00434

DRAWING NO.: C5.0

DATE DRAWN: 2/7/25

SITE UTILITY PLAN

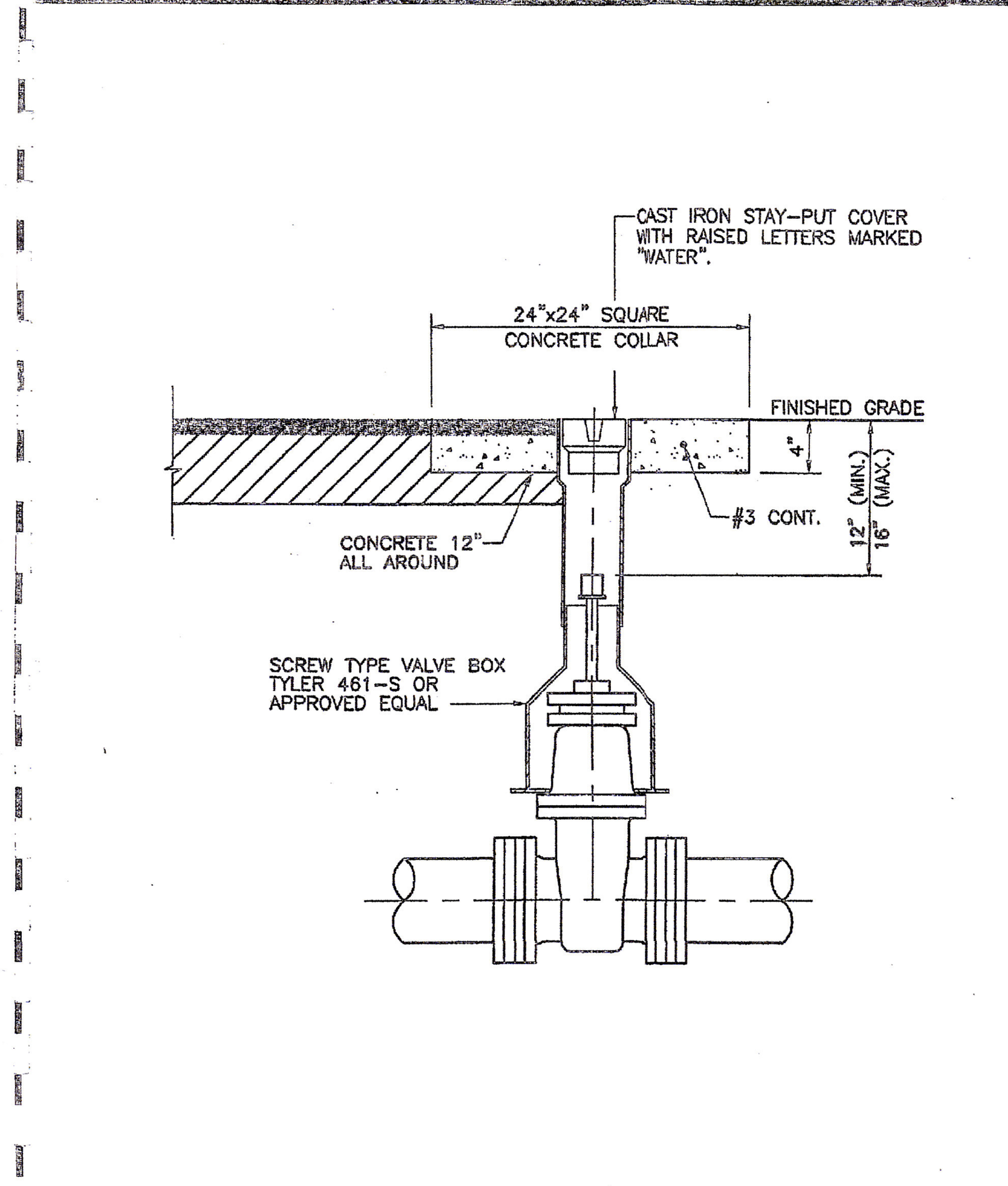

CITY OF COOPER CITY ENGINEERING STANDARDS COOPER CITY, FLORIDA	SCALE: N.T.S. REVISED:	STANDARD WATER SUPPLY DETAIL TYPICAL VALVE SETTING	W-1

Revised October 2022

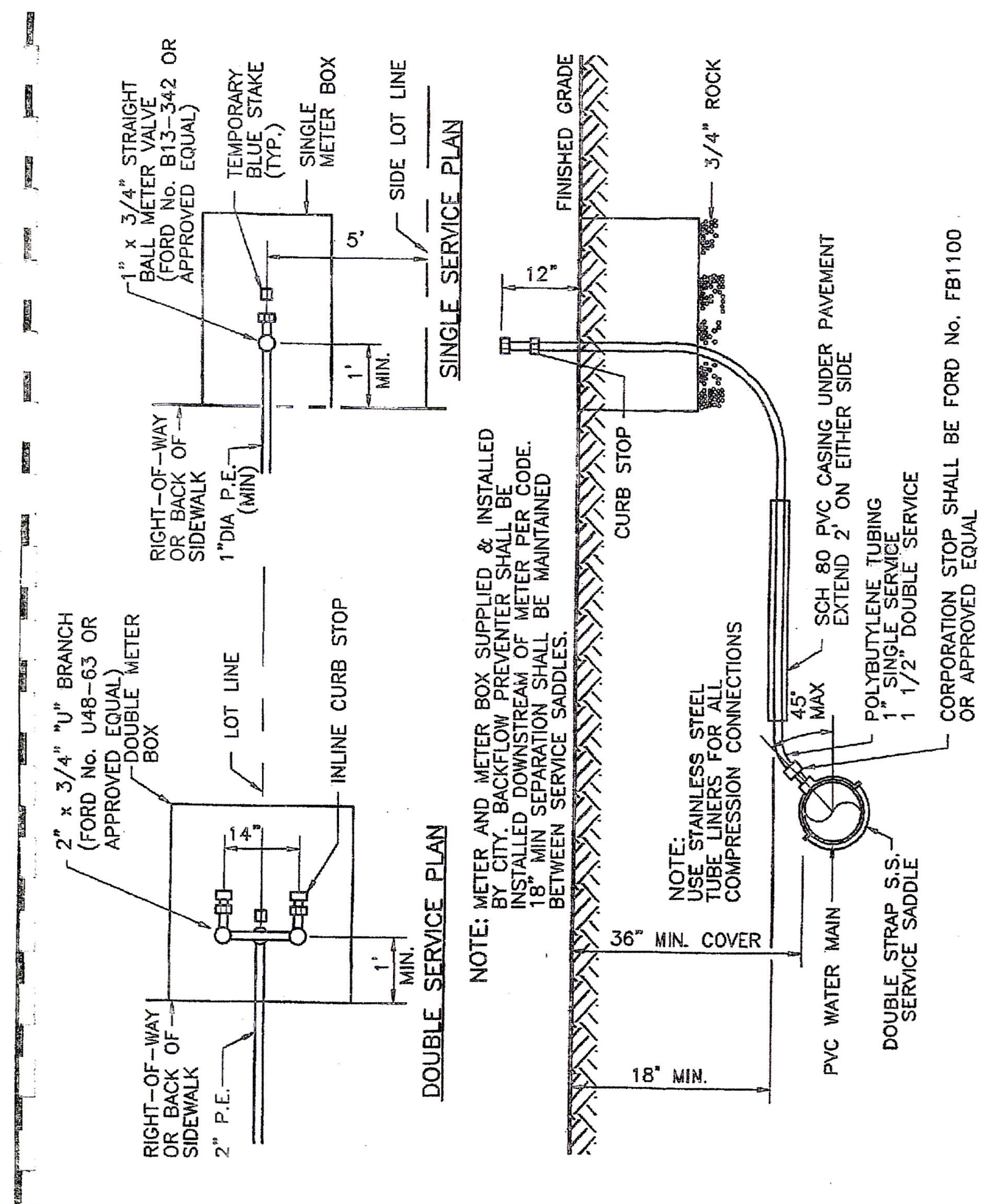

CITY OF COOPER CITY ENGINEERING STANDARDS COOPER CITY, FLORIDA	SCALE: N.T.S. REVISED:	STANDARD WATER SUPPLY DETAIL TYP. SINGLE & DOUBLE SERVICE CONNECTION	W-2

Revised October 2022

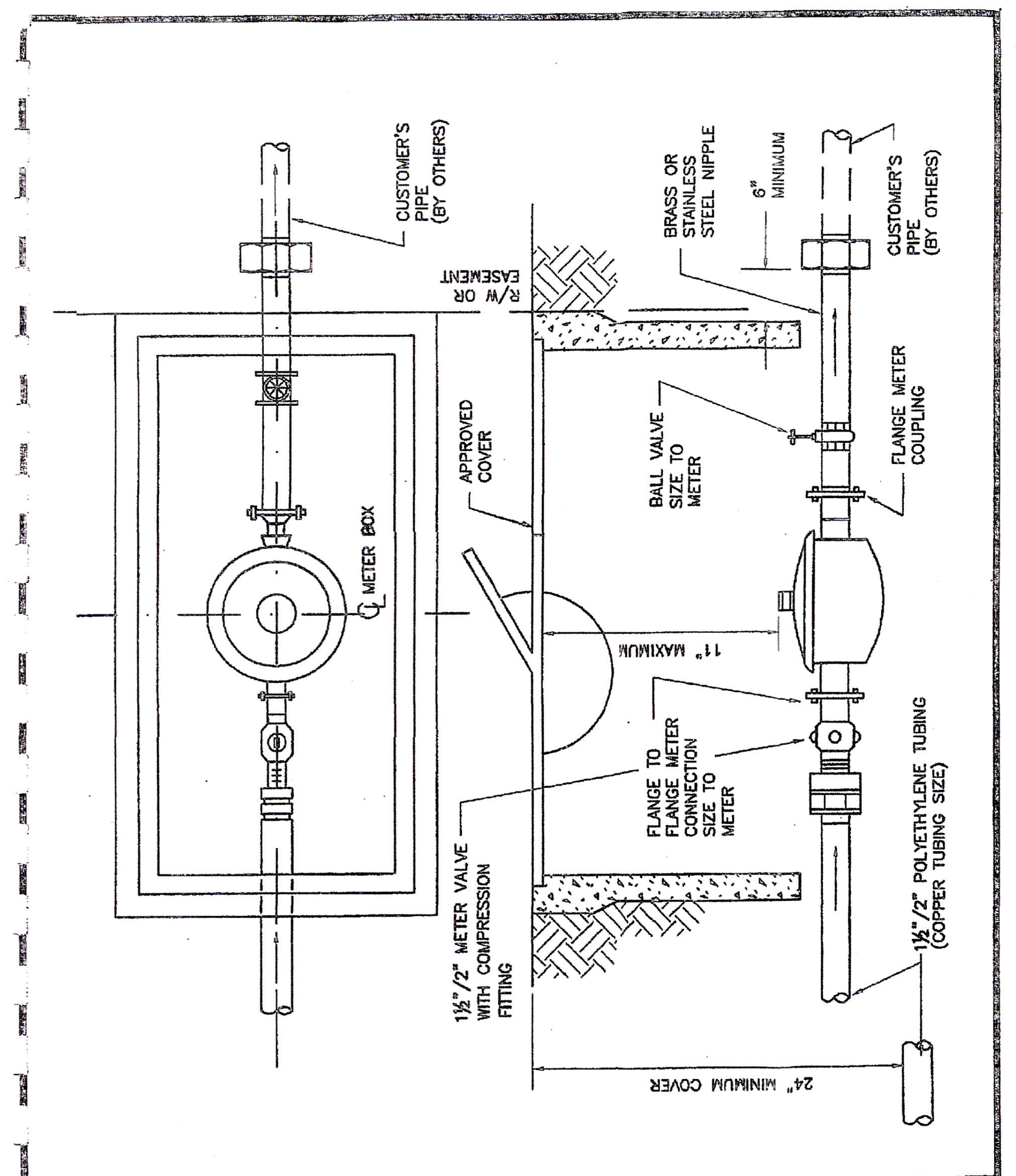

CITY OF COOPER CITY ENGINEERING STANDARDS COOPER CITY, FLORIDA	SCALE: N.T.S. REVISED:	STANDARD WATER SUPPLY DETAIL WATER METER INSTALLATION FOR 1-1/2" & 2" METERS	W-4

Revised October 2022

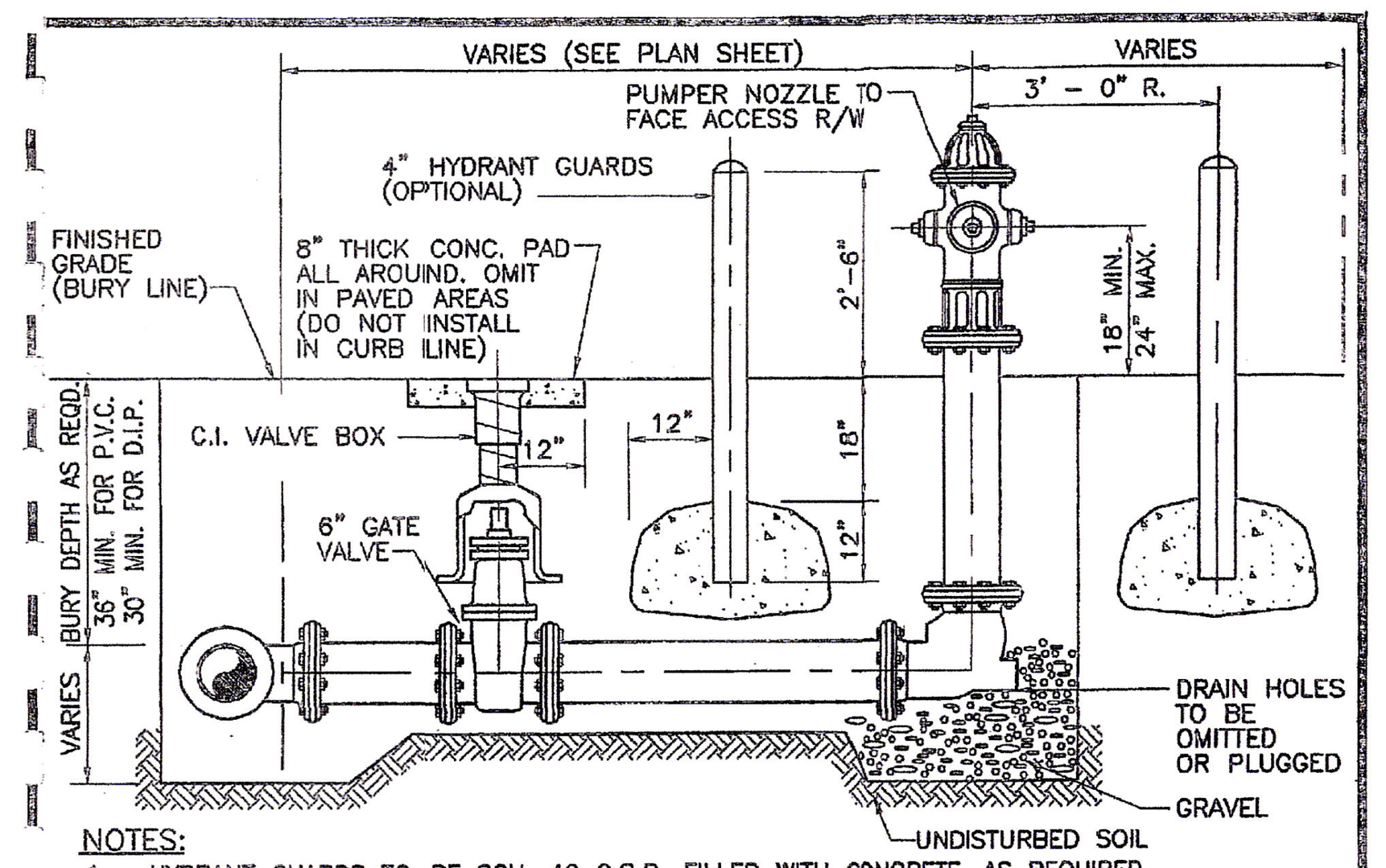

NOTES:
1. HYDRANT GUARDS TO BE SCH. 40 G.S.P. FILLED WITH CONCRETE, AS REQUIRED BY THE UTILITY DEPARTMENT.
2. OMIT REAR GUARDS IN LOCATIONS WHERE SIDEWALKS EXIST.
3. TIE RODS MAY BE OMITTED WHEN OTHER APPROVED ANCHORS ARE USED.
4. HYDRANT SET BACK SHALL CONFORM TO D.O.T. REQUIREMENTS WHERE APPLICABLE.
5. HYDRANT CENTERLINE TO BE LOCATED AT P.C. OF BLOCK CORNER RADIUS OR AT COMMON PROPERTY LINE BETWEEN ADJACENT LOTS.
6. HYDRANT SHALL BE 3 WAY 5¼" WITH 3'-6" BURY DEPTH. PUMPER NOZZLE TO FACE STREET.
7. HYDRANT VALVE TO BE INSTALLED AS CLOSE TO MAIN AS POSSIBLE.
8. HYDRANT BURY LINE TO MATCH STREET CROWN ELEVATION.
9. A 7.5 FOOT CLEAR RADIUS SHALL BE MAINTAINED AROUND HYDRANT.
10. FIRE HYDRANTS SHALL BE AMERICAN (B-84-B) OR APPROVED EQUAL. HYDRANTS OWNED BY CITY SHALL BE PAINTED "FIRE HYDRANT RED" WITH WHITE FLUORESCENT CAPS. PRIVATELY MAINTAINED HYDRANTS SHALL BE PAINTED YELLOW.
11. ENTIRE FIRE HYDRANT ASSEMBLY TO BE RESTRAINED W/SERIES 1100 "MEGALUG" OR APPROVED EQUAL.
12. THREE BLUE REFLECTIVE PAVEMENT MARKERS SHALL BE PROVIDED IN THE CENTER OF THE NEAREST ROADWAY LANE ADJACENT TO ALL FIRE HYDRANT LOCATIONS.

CITY OF COOPER CITY ENGINEERING STANDARDS COOPER CITY, FLORIDA	SCALE: N.T.S. REVISED:	STANDARD WATER SUPPLY DETAIL FIRE HYDRANT DETAIL	W-6

Revised October 2022

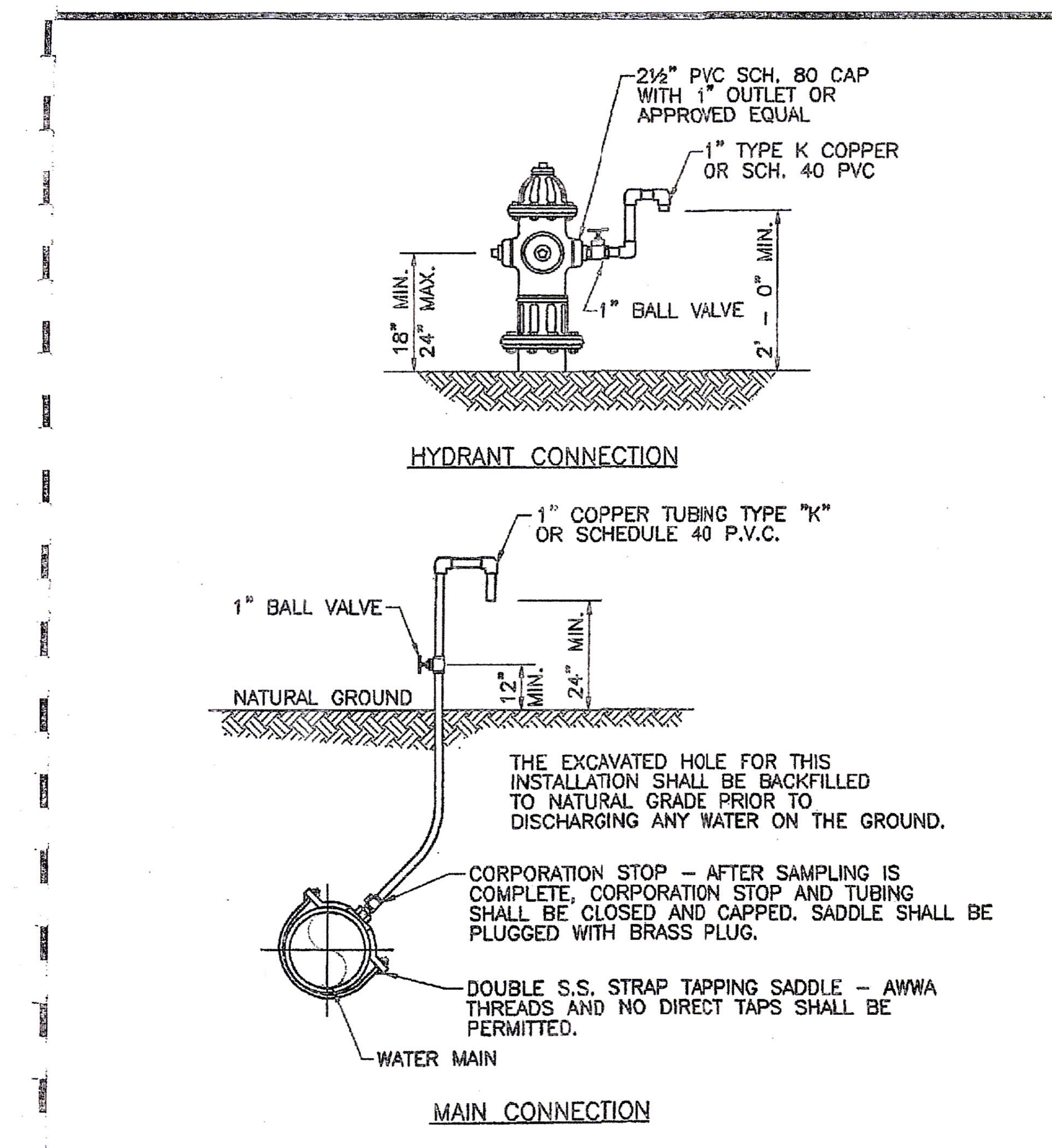

NOTE:
SEE 2" TERMINAL BLOW OFF DETAIL.

CITY OF COOPER CITY ENGINEERING STANDARDS COOPER CITY, FLORIDA	SCALE: N.T.S. REVISED:	STANDARD WATER SUPPLY DETAIL BACTERIOLOGICAL SAMPLING POINTS	W-7

Revised October 2022

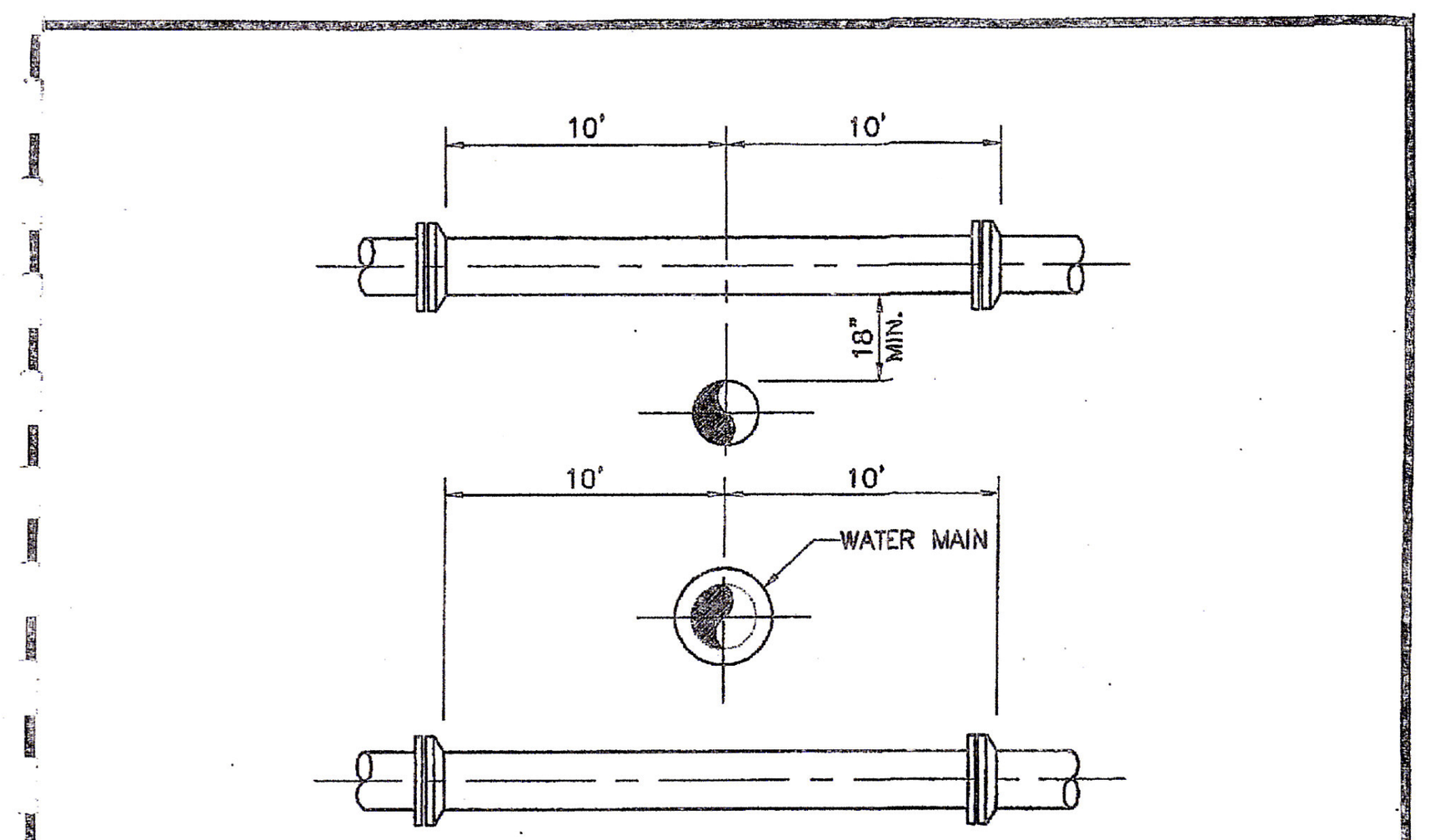

NOTES:
1. A WATER MAIN SHOULD CROSS OVER PIPES WHEREVER POSSIBLE MAINTAINING A 36 INCH COVER FOR P.V.C., 30 INCH COVER FOR D.I.P. AND 18 INCH SEPARATION AS MINIMUMS.
2. WHEREVER A WATER MAIN CROSSES UNDER A SEWER MAIN, OR CROSSES OVER WITH LESS THAN 18 INCHES VERTICAL SEPARATION, THEN D.I.P. SHALL BE USED FOR BOTH PIPES FOR A DISTANCE OF 20 FEET CENTERED ON CROSSING WITH NO JOINTS WITHIN 10 FEET OF THE CROSSING.
3. 18 INCH SEPARATION SHOULD BE MAINTAINED BETWEEN ALL PIPES (STORM, SEWER, WATER) WHENEVER POSSIBLE. 12 INCHES IS THE ABSOLUTE MINIMUM SEPARATION WITH D.I.P. ALLOWED FOR ANY SEPARATION LESS THAN 18 INCHES.
4. MAINTAIN 10 FEET HORIZONTAL SEPARATION BETWEEN WATER AND SEWER AS A MINIMUM.
5. 3 FOOT HORIZONTAL CLEARANCE SHALL BE PROVIDED BETWEEN WATER MAINS AND UTILITY OBSTRUCTIONS (CATCH BASINS, CONCRETE POLES, ETC.)

CITY OF COOPER CITY ENGINEERING STANDARDS COOPER CITY, FLORIDA	SCALE: N.T.S. REVISED:	STANDARD WATER SUPPLY DETAIL UTILITY CROSSING GENERAL REQUIREMENTS	W-8

Revised October 2022

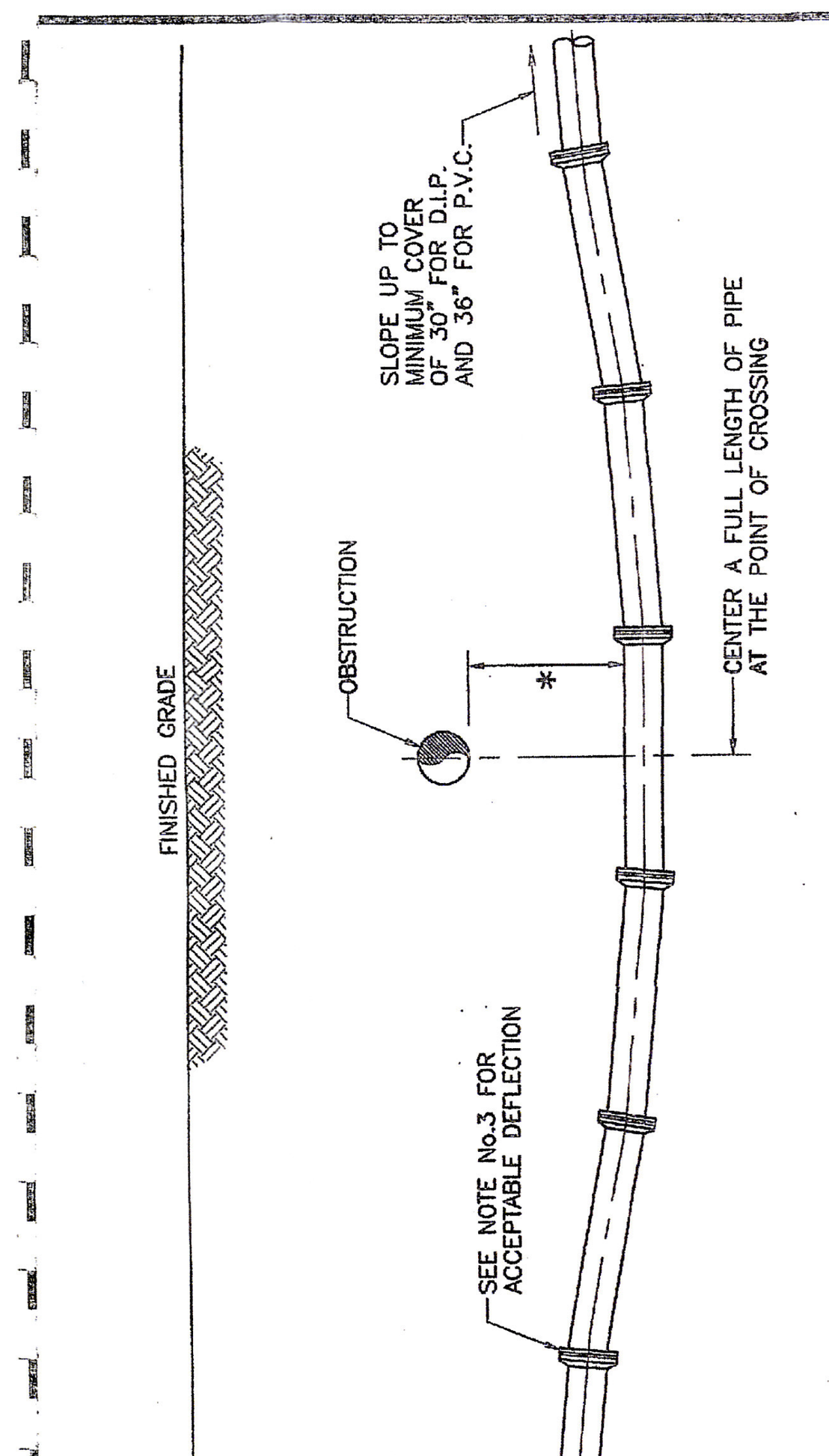

NOTES:
1. (*) 18" MINIMUM CLEARANCE REQUIRED FOR WATER AND SEWER MAIN CROSSINGS, 12" MINIMUM CLEARANCE REQUIRED FOR OTHER UTILITIES CROSSINGS.
2. THE DEFLECTION TYPE CROSSING SHALL BE USED WHENEVER POSSIBLE. ONLY UNDER SPECIFIC ORDERS BY THE ENGINEER SHALL THE FITTING TYPE CROSSING BE ALLOWED.
3. CONSTRUCT CROSSING USING 75% OF MANUFACTURER'S MAXIMUM JOINT DEFLECTION (MAXIMUM).
4. 5' MIN. HORIZ. CLEARANCE SHALL BE PROVIDED BETWEEN WATER MAIN AND TREES. 3' MIN. ALL OTHER OBSTRUCTIONS.

CITY OF COOPER CITY ENGINEERING STANDARDS COOPER CITY, FLORIDA	SCALE: N.T.S. REVISED:	STANDARD WATER SUPPLY DETAIL UTILITY CROSSING DEFLECTION TYPE	W-9

Revised October 2022

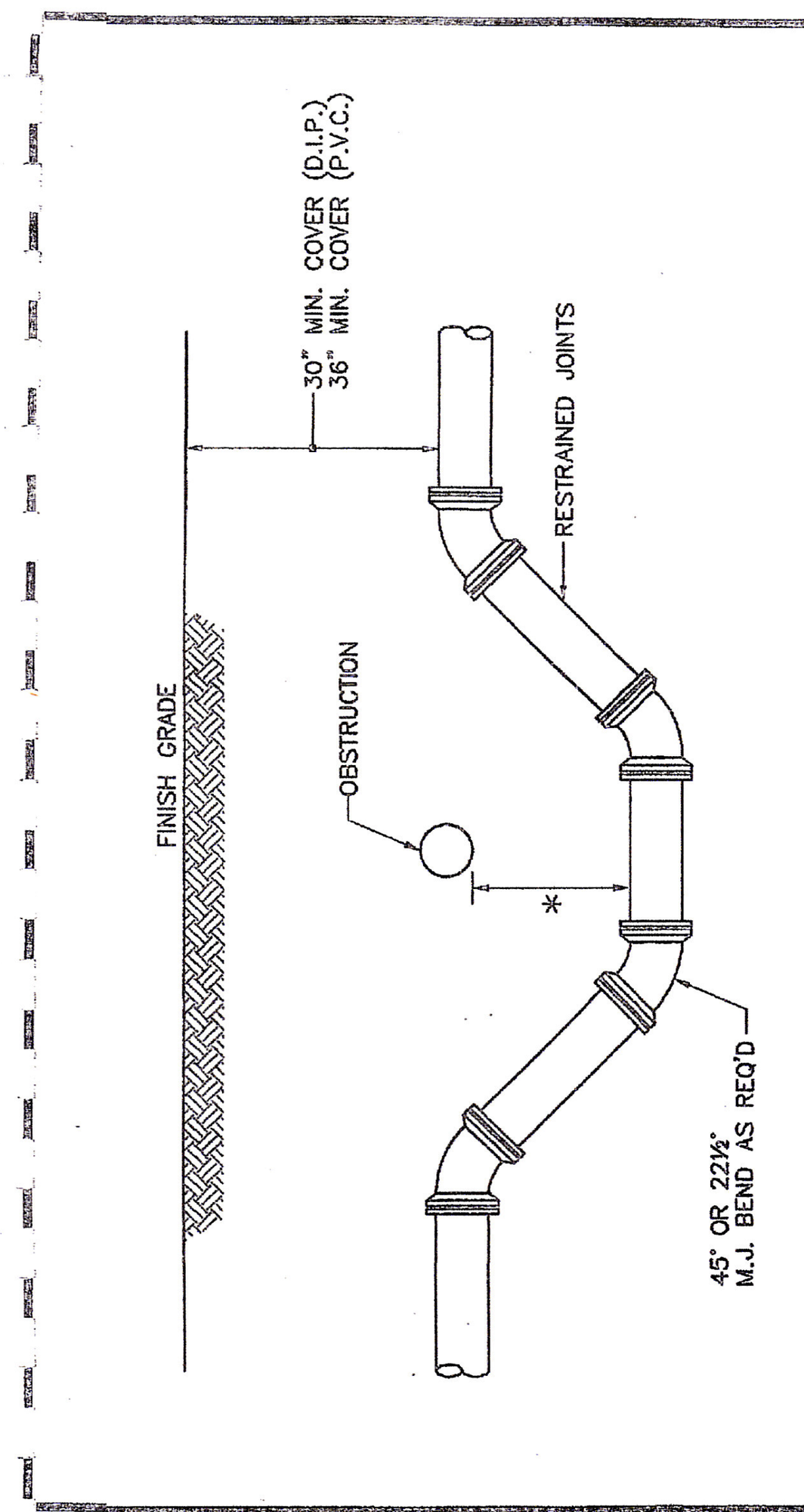

NOTES:
1. (*) 18" MINIMUM CLEARANCE REQUIRED FOR WATER & SEWER MAIN CROSSINGS, 12" MIN. CLEARANCE REQUIRED FOR OTHER UTILITIES CROSSINGS. SEE ENCASEMENT DETAIL IF MIN. CLEARANCE CAN NOT BE OBTAINED.

CITY OF COOPER CITY ENGINEERING STANDARDS COOPER CITY, FLORIDA	SCALE: N.T.S. REVISED:	STANDARD WATER SUPPLY DETAIL UTILITY CROSSING FITTING TYPE	W-10

Revised October 2022

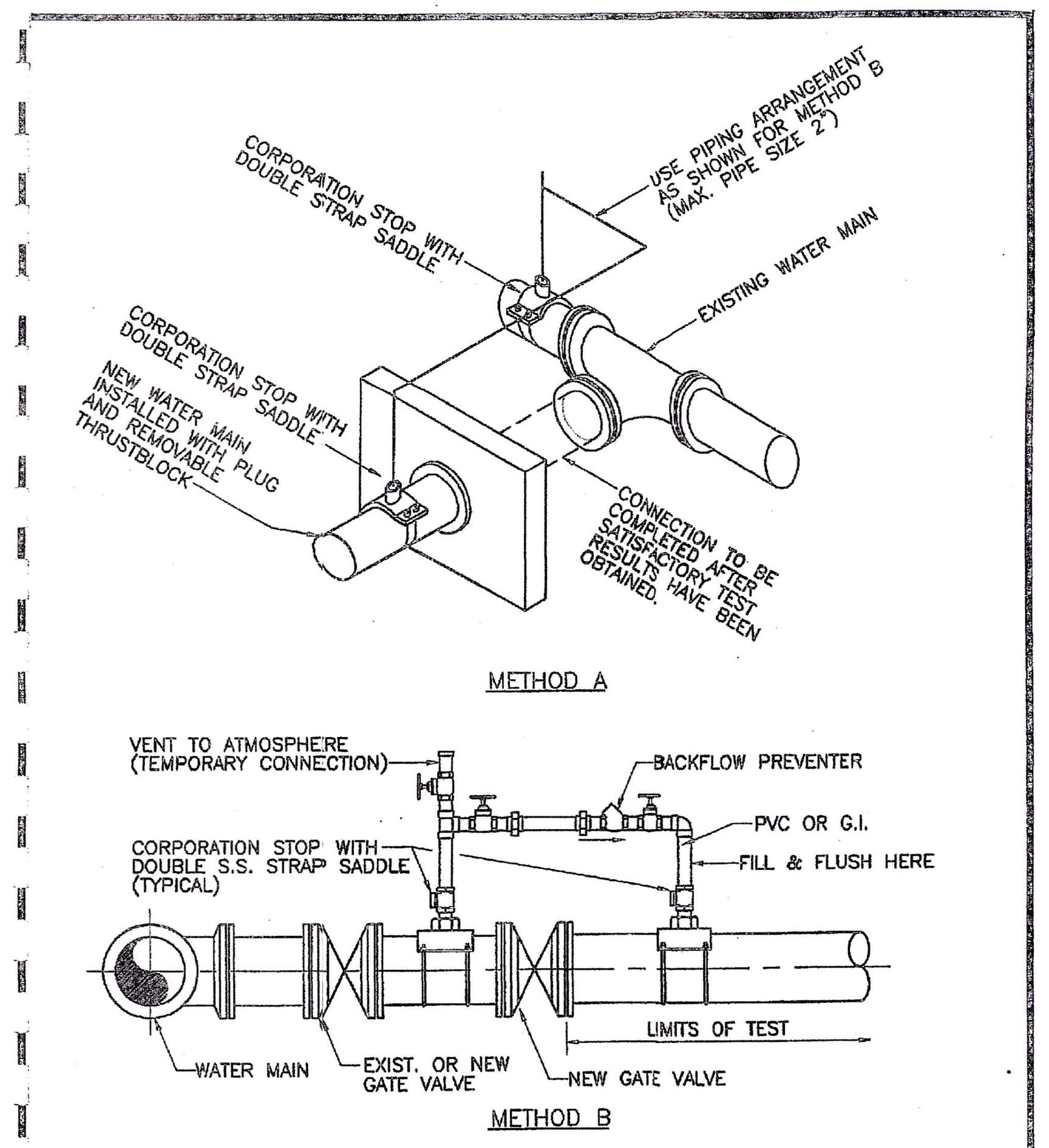

CITY OF COOPER CITY ENGINEERING STANDARDS COOPER CITY, FLORIDA	SCALE: N.T.S. REVISED:	STANDARD WATER SUPPLY DETAIL FILLING & FLUSHING	W-11

Revised October 2022

NOTES:
1. WATER MAIN TO BE PRESSURE TESTED AND DISINFECTED ACCORDING TO BROWARD COUNTY HEALTH DEPARTMENT, AWWA, AND MUNICIPAL SPECIFICATIONS IN EFFECT.
2. BACTERIOLOGICAL TESTS ARE TO BE PERFORMED BY THE CONTRACTOR AND AN APPROVED TESTING LABORATORY.
3. REMOVE TEMPORARY CONNECTION AT SADDLE ON NEW MAINS AFTER FILLING AND FLUSHING HAS BEEN COMPLETED AND REPLACE WITH BRASS PLUG.
4. PROVIDE ALL NECESSARY THRUSTBLOCKS OR OTHER RESTRAINTS.
5. FILLING AND FLUSHING LOCATIONS SHALL BE COORDINATED BY THE CONTRACTOR, ENGINEER, AND CITY.
6. VENT TO ATMOSPHERE SHALL REMAIN OPEN DURING ALL PHASES OF PRESSURE TESTING.

CITY OF COOPER CITY ENGINEERING STANDARDS COOPER CITY, FLORIDA	SCALE: N.T.S. REVISED:	STANDARD WATER SUPPLY DETAIL FILLING & FLUSHING	W-11A

Revised October 2022

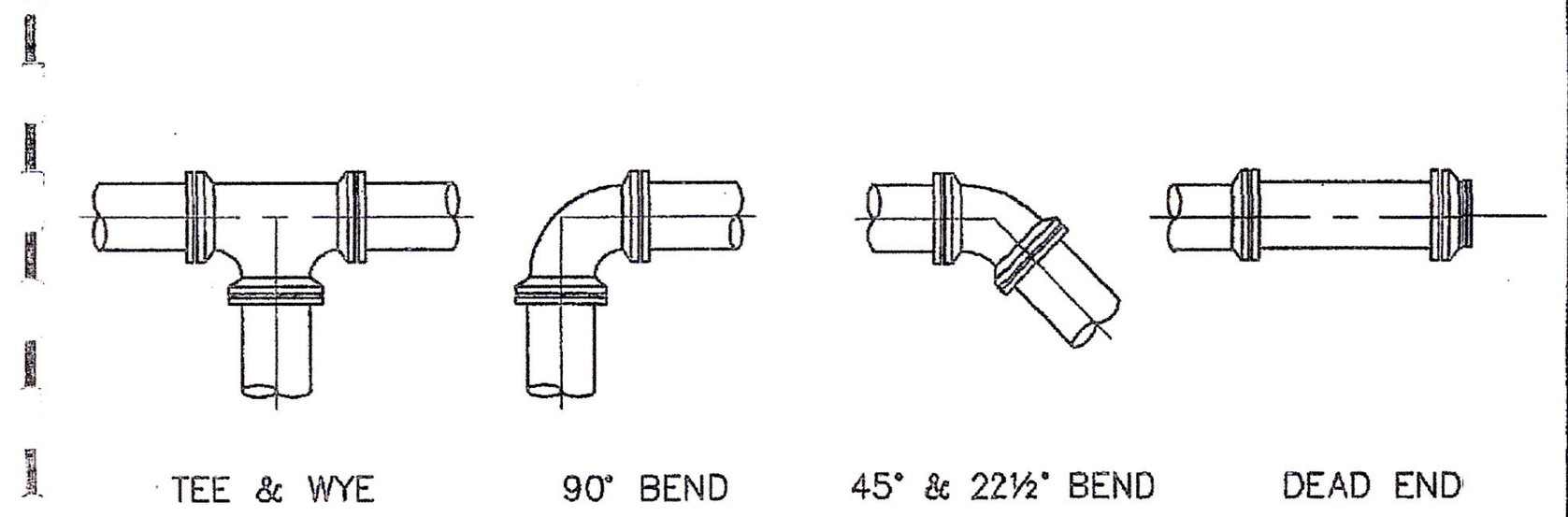

RESTRAINED PIPE LENGTH (LINEAL FEET)

PIPE SIZE	TEE & WYE	90°BEND	45°BEND	22½° BEND	11¼° BEND	DEAD END
4"	22	22	12	6	2	34
6"	27	27	16	9	5	48
8"	34	34	20	11	6	62
10"	42	41	24	14	7	75
12"	54	48	28	16	8	87

NOTES:
1. THE FIGURES IN THIS TABLE ARE BASED ON 150 PSI TEST PRESSURE WITH 2.5 FEET OF COVER AND SOIL WEIGHT OF 120 POUNDS PER CUBIC FOOT AGAINST UNDISTURBED TRENCH. A 20% SAFETY FACTOR HAS BEEN ADDED.
2. THE LENGTHS SHOWN ARE FOR NON-WRAPPED DUCTILE IRON PIPE ONLY. LENGTHS FOR ALL OTHER PIPE MATERIALS WILL HAVE TO BE CALCULATED.

CITY OF COOPER CITY ENGINEERING STANDARDS COOPER CITY, FLORIDA	SCALE: N.T.S. REVISED:	STANDARD WATER SUPPLY DETAIL RESTRAINED JOINT DETAIL	W-12

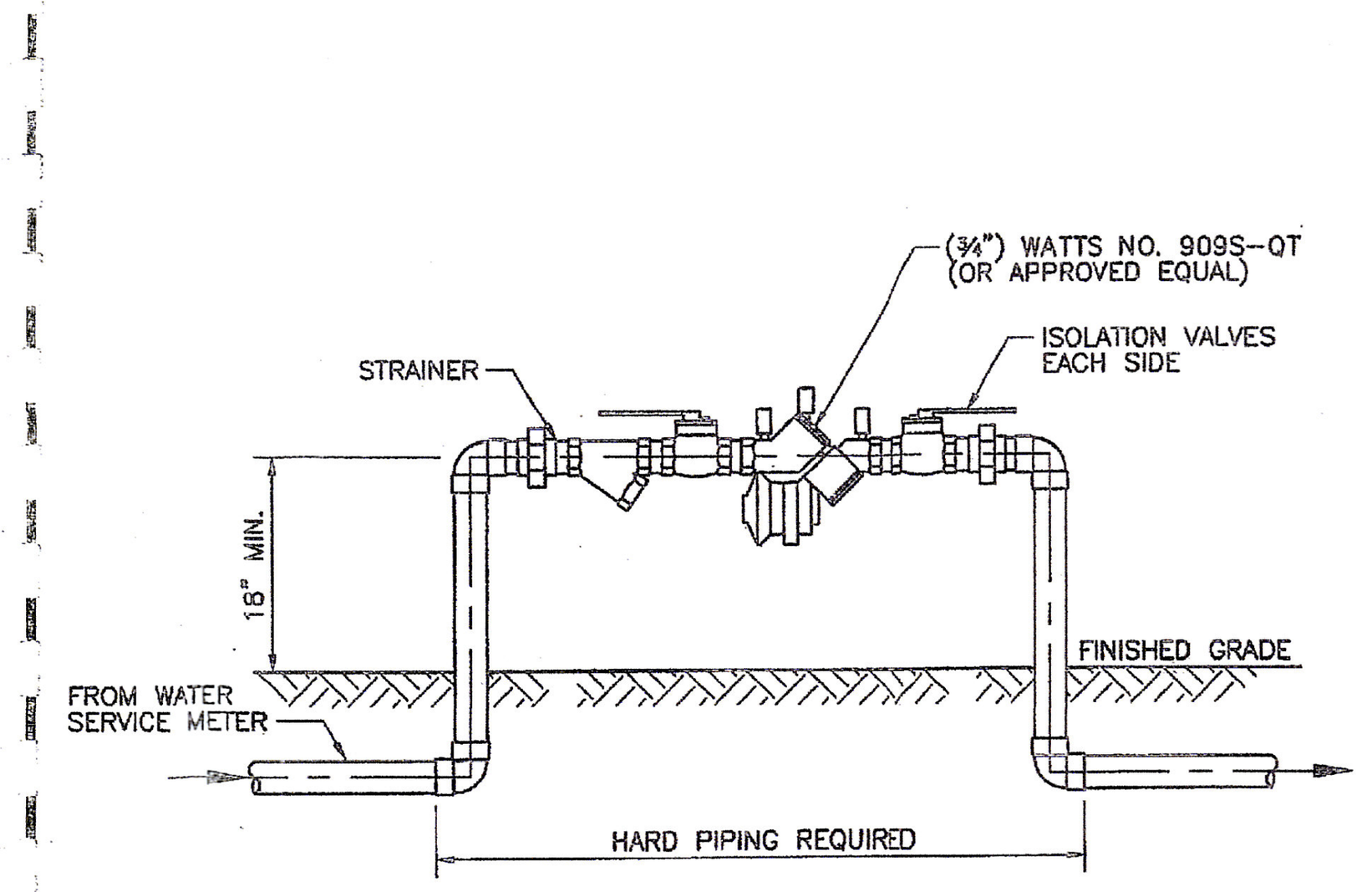

CITY OF COOPER CITY ENGINEERING STANDARDS COOPER CITY, FLORIDA	SCALE: N.T.S. REVISED:	STANDARD WATER SUPPLY DETAIL BACKFLOW PREVENTER	W-14

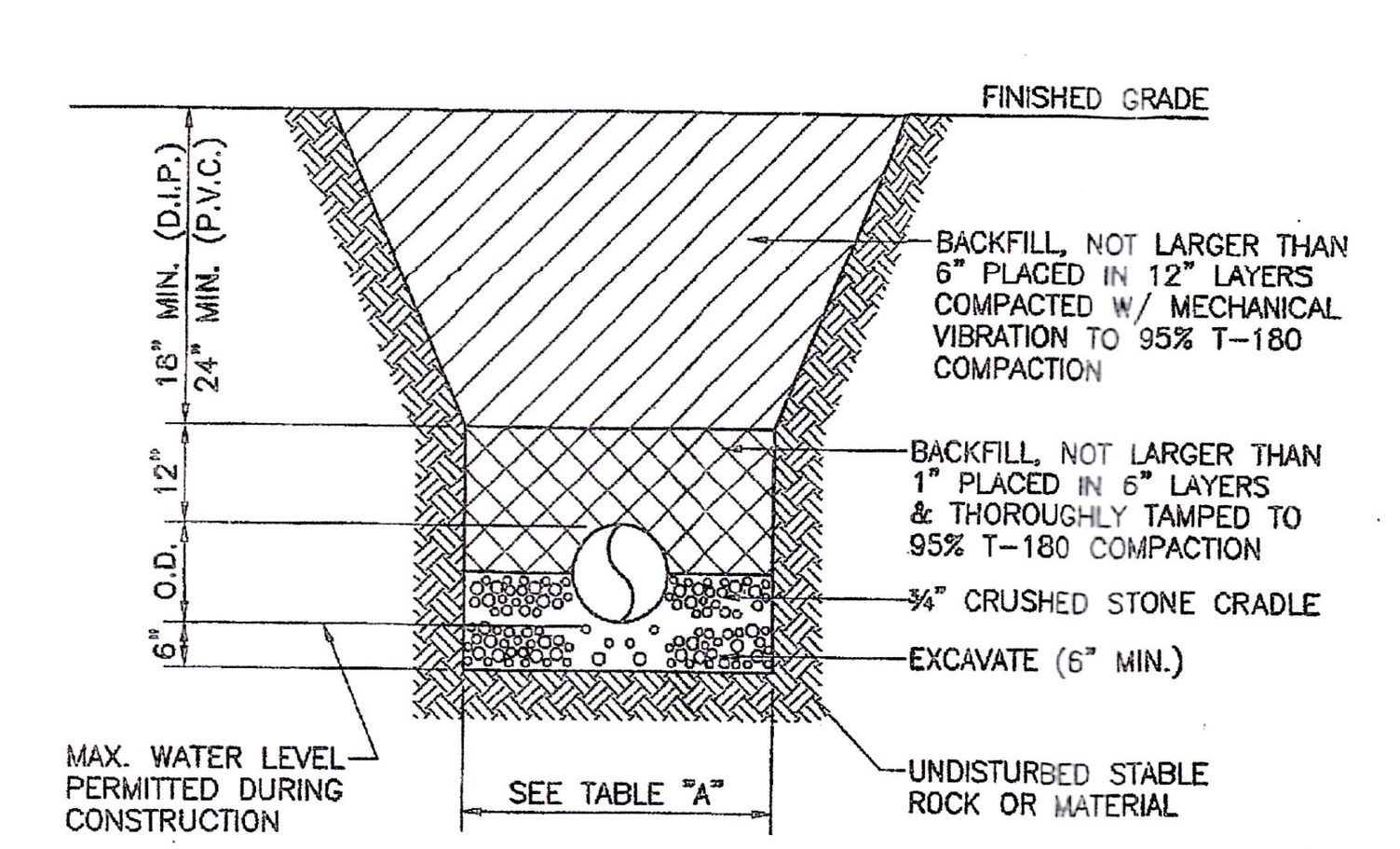

NOTE:
1. MAXIMUM DENSITY AS DETERMINED BY A.A.S.H.T.O. T-180.

TABLE "A"

PIPE SIZE	DEPTH OF BACKFILL AT WHICH TRENCH WIDTH IS TO BE LIMITED	MAXIMUM TRENCH WIDTH
6"	15"	2'-6"
8"	15"	3'-0"
10"	12"	3'-0"
12"	12"	3'-3"

DIMENSIONS SHOWN APPLY TO ALL FOUNDATIONS

CITY OF COOPER CITY ENGINEERING STANDARDS COOPER CITY, FLORIDA	SCALE: N.T.S. REVISED:	STANDARD WATER SUPPLY DETAIL TRENCH DETAIL UNPAVED AREAS	W-16

SAFETY IS IN YOUR HANDS.
EVERY DIG. EVERY TIME.

JOAQUIN A. MOJICA LICENSE No. 60488 STATE OF FLORIDA PROFESSIONAL ENGINEER

APPROVED : JOAQUIN A. MOJICA, P.E.
FLA. REGISTRATION NO. 60488 DATE : 10/24/2025

WATER & SEWER DETAILS

NO.	DATE	REVISIONS	DES.	DWN.
1	7/22/24	REV. PER DRC COMMENTS		
	5/10/24	REVIEW SET		

SUN CREDIT UNION
COOPER CITY, FLORIDA
FOR: SUN CREDIT UNION

MILLER LEGG
South Florida Office: 13680 NW 5th Street, Suite 200
Sunrise, Florida · 33325
954-436-7000
www.millerlegg.com

CERTIFICATE OF AUTHORIZATION: LB6680

DES	DRWN	CHK
DES.	DWN.	CHK.

PROJECT / FILE NO.: 23-00434
DRAWING NO.: C5.1
DATE DRAWN: 2/7/25

V:\PROJECTS\2023\23-00434 - SUN CREDIT UNION\DRAWINGS\23-00434_UTIL.DWG by MGRINBANK 2/7/2025 2:28:00 PM

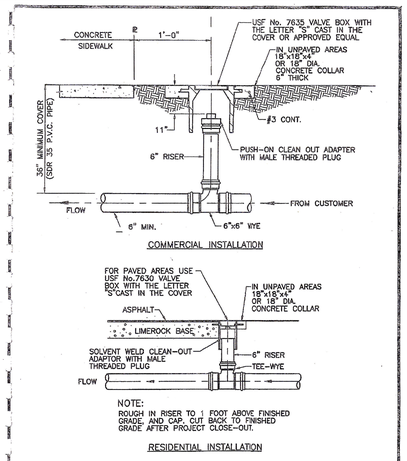

CITY OF COOPER CITY ENGINEERING STANDARDS COOPER CITY, FLORIDA	SCALE: N.T.S. / REVISED:	STANDARD SANITARY SEWER DETAIL CLEANOUT	S-10

Revised October 2022

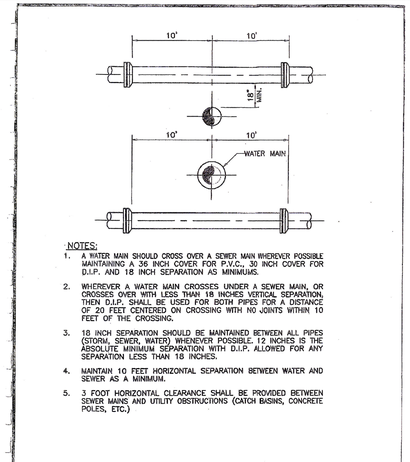

NOTES:
1. A WATER MAIN SHOULD CROSS OVER A SEWER MAIN WHEREVER POSSIBLE MAINTAINING A 36 INCH COVER FOR P.V.C., 30 INCH COVER FOR D.I.P. AND 18 INCH SEPARATION AS MINIMUMS.
2. WHEREVER A WATER MAIN CROSSES UNDER A SEWER MAIN, OR CROSSES OVER WITH LESS THAN 18 INCHES VERTICAL SEPARATION, THEN D.I.P. SHALL BE USED FOR BOTH PIPES FOR A DISTANCE OF 20 FEET CENTERED ON CROSSING WITH NO JOINTS WITHIN 10 FEET OF THE CROSSING.
3. 18 INCH SEPARATION SHOULD BE MAINTAINED BETWEEN ALL PIPES (STORM, SEWER, WATER) WHENEVER POSSIBLE. 12 INCHES IS THE ABSOLUTE MINIMUM SEPARATION WITH D.I.P. ALLOWED FOR ANY SEPARATION LESS THAN 18 INCHES.
4. MAINTAIN 10 FEET HORIZONTAL SEPARATION BETWEEN WATER AND SEWER AS A MINIMUM.
5. 3 FOOT HORIZONTAL CLEARANCE SHALL BE PROVIDED BETWEEN SEWER MAINS AND UTILITY OBSTRUCTIONS (CATCH BASINS, CONCRETE POLES, ETC.)

CITY OF COOPER CITY ENGINEERING STANDARDS COOPER CITY, FLORIDA	SCALE: N.T.S. / REVISED:	STANDARD SANITARY SEWER DETAIL UTILITY CROSSING GENERAL REQUIREMENTS	S-11

Revised October 2022

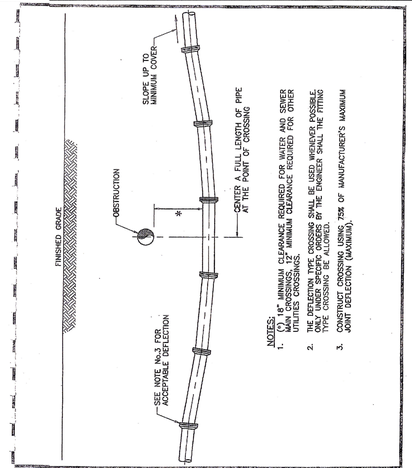

NOTES:
1. (A) 18" MINIMUM CLEARANCE REQUIRED FOR WATER AND SEWER MAIN CROSSINGS, 12" MINIMUM CLEARANCE REQUIRED FOR OTHER UTILITIES CROSSINGS.
2. THE DEFLECTION TYPE CROSSING SHALL BE USED WHENEVER POSSIBLE AND WHERE DEFLECTION EXCEEDS MAXIMUM, THE ENGINEER SHALL USE FITTING TYPE CROSSING BE ALLOWED.
3. CONSTRUCT CROSSING USING 75% OF MANUFACTURER'S MAXIMUM JOINT DEFLECTION (MAXIMUM).

CITY OF COOPER CITY ENGINEERING STANDARDS COOPER CITY, FLORIDA	SCALE: N.T.S. / REVISED:	STANDARD SANITARY SEWER DETAIL UTILITY CROSSING DEFLECTION TYPE	S-12

Revised October 2022

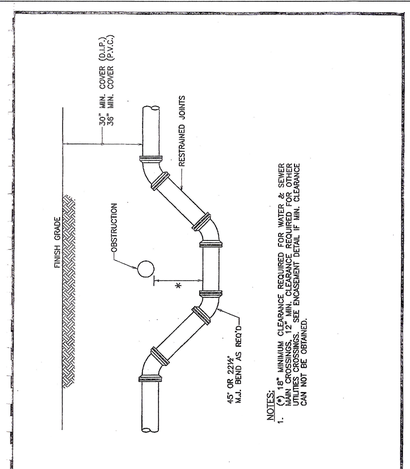

NOTES:
1. (A) 18" MINIMUM CLEARANCE REQUIRED FOR WATER & SEWER MAIN CROSSINGS, 12" MIN. CLEARANCE REQUIRED FOR OTHER UTILITIES CROSSINGS. SEE ENCASEMENT DETAIL IF MIN. CLEARANCE CAN NOT BE OBTAINED.

CITY OF COOPER CITY ENGINEERING STANDARDS COOPER CITY, FLORIDA	SCALE: N.T.S. / REVISED:	STANDARD SANITARY SEWER DETAIL UTILITY CROSSING FITTING TYPE	S-13

Revised October 2022

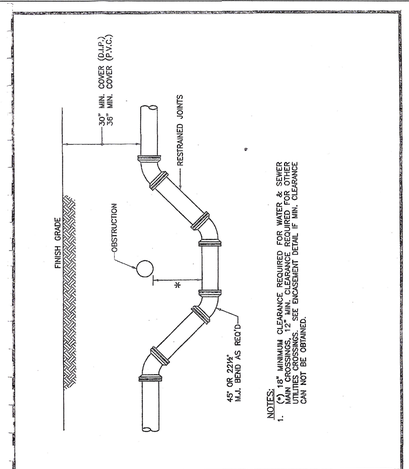

NOTES:
1. (A) 18" MINIMUM CLEARANCE REQUIRED FOR WATER & SEWER MAIN CROSSINGS, 12" MIN. CLEARANCE REQUIRED FOR OTHER UTILITIES CROSSINGS. SEE ENCASEMENT DETAIL IF MIN. CLEARANCE CAN NOT BE OBTAINED.

CITY OF COOPER CITY ENGINEERING STANDARDS COOPER CITY, FLORIDA	SCALE: N.T.S. / REVISED:	STANDARD SANITARY SEWER DETAIL UTILITY CROSSING FITTING TYPE	S-13

Revised October 2022

CITY OF COOPER CITY ENGINEERING STANDARDS COOPER CITY, FLORIDA	SCALE: N.T.S. / REVISED:	STANDARD SANITARY SEWER DETAIL TYPICAL VALVE SETTING	S-15

Revised October 2022

NOTE:
1. MAXIMUM DENSITY AS DETERMINED BY A.A.S.H.T.O.

TABLE "A"

PIPE SIZE	DEPTH OF BACKFILL AT WHICH TRENCH WIDTH IS TO BE LIMITED	MAXIMUM TRENCH WIDTH
6"	15"	2'-6"
8"	15"	3'-0"
10"	12"	3'-0"

DIMENSIONS SHOWN APPLY TO ALL FOUNDATIONS

CITY OF COOPER CITY ENGINEERING STANDARDS COOPER CITY, FLORIDA	SCALE: N.T.S. / REVISED:	STANDARD SANITARY SEWER DETAIL TRENCH DETAIL UNPAVED AREAS	S-16

Revised October 2022

PUBLIC SANITARY SEWER FORCE MAIN PROFILE VIEW

HORIZONTAL SCALE: 1" = 20'
VERTICAL SCALE: 1" = 2'

PUBLIC DOMESTIC WATER SERVICE PROFILE VIEW

HORIZONTAL SCALE: 1" = 20'
VERTICAL SCALE: 1" = 2'

811 SAFETY IS IN YOUR HANDS. EVERY DIG. EVERY TIME.

JOAQUIN A. MOJICA LICENSE No. 60488 STATE OF FLORIDA PROFESSIONAL ENGINEER

APPROVED : JOAQUIN A. MOJICA, P.E.
FLA. REGISTRATION NO. 60488 DATE : 10/24/2025

NO	DATE	REVISIONS	DES
1	7/22/24	REV. PER DRC COMMENTS	
	5/10/24	REVIEW SET	

SUN CREDIT UNION

COOPER CITY, FLORIDA
FOR: SUN CREDIT UNION

WATER & SEWER DETAILS & PROFILES

MILLER LEGG
South Florida Office: 13880 NW 5th Street, Suite 200
Sunrise, Florida 33325
954-436-7000
www.millerlegg.com

CERTIFICATE OF AUTHORIZATION: LB6680

DES	DRWN	CHK
DES.	DWN.	CHK.

PROJECT / FILE NO. 23-00434
DRAWING NO. C5.2
DATE DRAWN: 2/7/25

V:\PROJECTS\2023\23-00434 - SUN CREDIT UNION\DRAWINGS\23-00434_UTIL.DWG by MCRINBANK 2/7/2025 2:28:00 PM

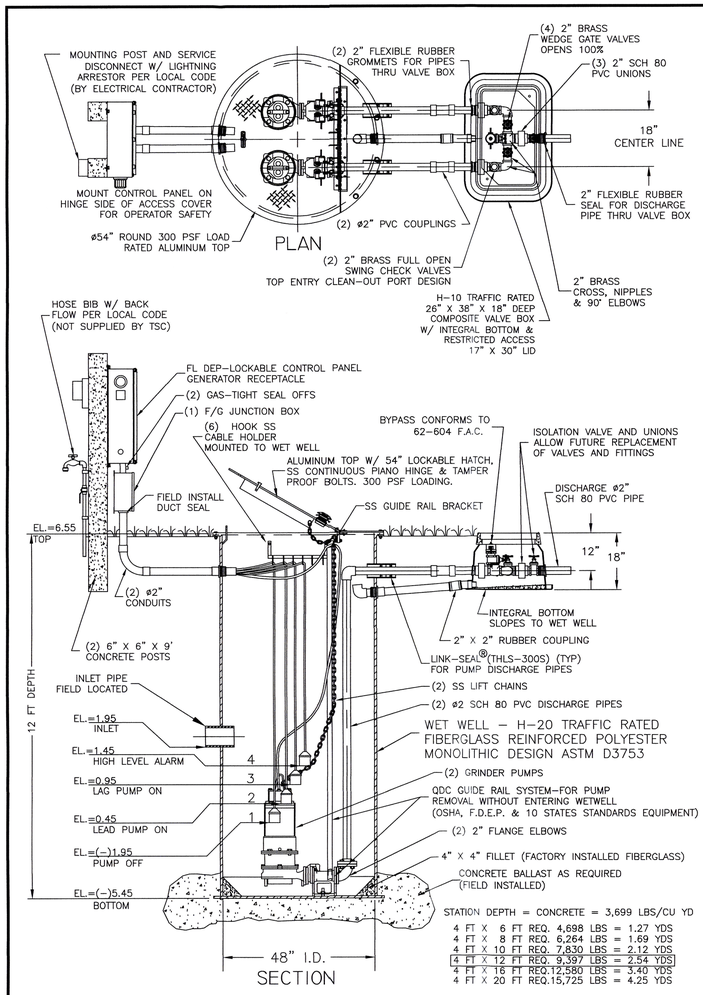

STATION DEPTH = CONCRETE = 3,699 LBS/CU YD

4 FT X	6 FT	REQ. 4,698 LBS	= 1.27 YDS
4 FT X	8 FT	REQ. 6,264 LBS	= 1.69 YDS
4 FT X	10 FT	REQ. 7,830 LBS	= 2.12 YDS
4 FT X	12 FT	REQ. 9,397 LBS	= 2.54 YDS
4 FT X	16 FT	REQ.12,580 LBS	= 3.40 YDS
4 FT X	20 FT	REQ.15,725 LBS	= 4.25 YDS

48" DUPLEX STATION - 2" PIPING WITH SLIDE RAIL SYSTEM, V.B. AND F.D.E.P. PANEL TSC PRE-FAB PUMP SOLUTIONS©

MODEL TSC2-48.3 R21.dwg©

2. GROUT FILLET (1 TO 1 SLOPE TO "HOPPER" BOTTOM)
1. HOSE BIBB WITH REDUCED PRESSURE BACK FLOW PREVENTER FIELD INSTALL BY CONTRACTOR

JOB: _____

QS: _____

GENERAL NOTES

FURNISH AND INSTALL LIBERTY SUBMERSIBLE GRINDER PUMPS:

DESIGN CONDITION:

MODEL	LGV	10	HP
GPM	90	145	FT/TDH
VOLTAGE	208/230	THREE	PHASE
DISCHARGE	2"	7"	IMPELLER

SEWAGE GRINDER PUMP:

1. RATED FOR FIFTEEN (15) STARTS PER HOUR.
2. OIL FILLED MOTOR DESIGNED FOR SEWAGE APPLICATION WITH CLASS H INSULATION.
3. DUAL MECHANICAL SHAFT SEALS (SILICON CARBIDE / SILICON CARBIDE)
4. HIGH TEMPERATURE BALL BEARINGS B-10 RATING OF 100,000 HOURS, UPPER - SINGLE ROW, LOWER - DOUBLE ROW
5. PUMP SHAFT HORSEPOWER (BHP) SHALL NOT EXCEED MOTOR RATED HORSEPOWER THROUGHOUT THE ENTIRE OPERATING RANGE OF THE PUMP PERFORMANCE CURVE.
6. MOTORS SHALL BE DUAL WOUND AND CAPABLE OF OPERATING ON 208/230 VOLT WITH A 10% TOLERANCE VOLTAGE (190 TO 260) OR OPERATE ON 460 VOLT BY CHANGING THE MOTOR LEADS INSIDE THE PUMP.

FIBERGLASS WET WELL: SHALL BE A ONE PIECE UNIT WITH INTEGRAL BOTTOM, WALL AND UPPER FLANGE. THE ENTIRE FIBERGLASS WET WELL SHALL HAVE A DYNAMIC LOAD RATING OF 16,000 FT/LBS. EACH UNIT MUST BE SERIAL NUMBERED TO IDENTIFY THE TEST PROCEDURE. ASTM D 3753 & H-20 SPECIFICATIONS SHALL BE REQUIRED AS MINIMUM.

ALUMINUM HATCH: TSC MODEL-54FM (54") ROUND WITH LOCKABLE HATCH, REINFORCED FOR LOAD RATING OF 300 LBS/FT WITH HOLD OPEN SAFETY ARM, LOCKING DEVICE FOR HASP TYPE PADLOCK AND STAINLESS STEEL HARDWARE.

VALVE BOX: FIBERGLASS COMPOSITE (H-10 TRAFFIC RATED) WITH INTEGRAL BOTTOM. (FOR 1 1/4" AND 2" DISCHARGE PIPING SXS HEADER SYSTEM) SHALL BE 26" X 38" X 18" WITH 17" X 30" LIMITED ACCESS LID

ACCESSORIES: #304 S/S - GUIDE RAILS, UPPER GUIDE RAIL BRACKETS, CABLE HOLDER, ANCHOR BOLTS AND PUMP LIFTING CHAINS.

VALVES : SHALL BE SEWAGE SERVICE DESIGN BRASS SWING CHECK VALVES WITH TOP ENTRY CLEAN-OUT PORT AND BRASS WEDGE GATE VALVES OPEN 100%.

PIPING: 2" SCHEDULE 80 PVC.

FLOAT SWITCHES: UL LISTED SJ ELECTRO MODEL (SJ 30 SWENO).

PUMP SUPPLIER SHALL PROVIDE SUBMERSIBLE PUMPS, SLIDE RAIL ASSEMBLIES, CONTROL PANEL, JUNCTION BOX, FLOAT SWITCHES, ALUMINUM HATCH AND ACCESSORIES TO INSURE PROPER OPERATION AND WARRANTY.

THE COMPLETE PACKAGE PUMPING STATION SHALL HAVE PUMP BASES, SLIDE RAIL ASSEMBLIES AND DISCHARGE PIPING ASSEMBLED BY TECHNICAL SALES CORPORATION READY TO SHIP FOR FIELD INSTALLATION.

THE MANUFACTURER OF PRE-FAB PUMP SOLUTIONS©,
TECHNICAL SALES CORPORATION, 4621 N. HALE AVE TAMPA, FL 33614 (813)876-9256

LIBERTY ENGINEERED PRODUCTS

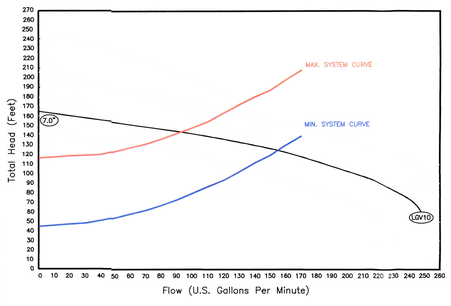

PUMP PERFORMANCE CURVE

CONTROL PANEL -SHALL CONFORM TO FL DEP 62-604 F.A.C.

CONTROL PANEL SHALL BE TSC MODEL # 38-D IN NEMA 4X FIBERGLASS ENCLOSURE. THE PANEL SHALL MEET STATE OF FLORIDA DEPARTMENT OF ENVIRONMENTAL PROTECTION (DEP), ENVIRONMENTAL PROTECTION COMMISSION (EPC) AND LOCAL CODE REQUIREMENTS GOVERNING PRIVATE LIFT STATIONS.

FLOAT SWITCHES AND CONTROL SYSTEM SHALL BE UL LISTED AND INTRINSICALLY SAFE. ALL COMPONENTS SHALL BE UL LISTED.

A JUNCTION BOX IS REQUIRED, WITH SHOP POURED SEALS BETWEEN BOX AND CONTROL PANEL TO PREVENT SEWER GAS ENTRY INTO CONTROL PANEL.

ELECTRICAL CONTRACTOR TO PROVIDE SERVICE DISCONNECT WITH LIGHTNING ARRESTOR MOUNTED PER LOCAL CODES.

THE CONTROL PANEL SHALL BE SUITABLY INSTALLED TO PREVENT SETTLING OR TIPPING.

BATTERY BACK-UP ALARM SYSTEM TO BE INCORPORATED INTO CONTROL PANEL PER THE "10 STATES STANDARDS"

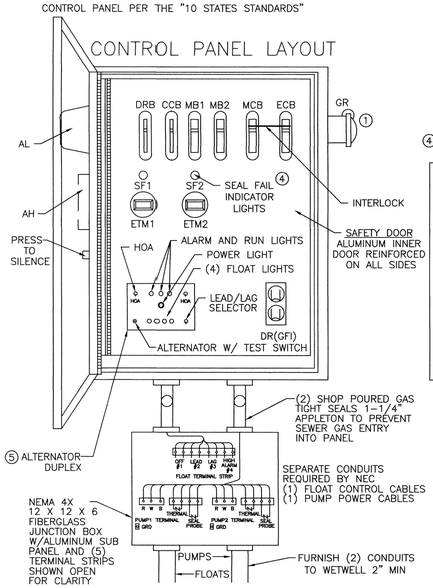

LEGEND

AH	ALARM HORN	
AL	ALARM LIGHT	
ASB	ALARM SILENCE BUTTON	
(5) ATS	ALTERNATOR W/TEST SWITCH	
(6) BBU	BATTERY (BACK-UP UNIT)	
CCB	CONTROL CIRCUIT BREAKER	
DR	DUPLEX RECEPTACLE	
DRB	DUPLEX RECEPTACLE BREAKER	
ECB	EMERGENCY CIRCUIT BREAKER	
ETM	ELAPSED TIME METER	
F	FUSE	
FL	FLASHER	
FS	FLOAT SWITCH (REGULATOR)	
(1) GR	GENERATOR RECEPTACLE	
GRD	GROUND	
HOA	HAND-OFF-AUTOMATIC SELECTOR	
LA	LIGHTNING ARRESTOR	
MB	MOTOR BREAKER	
MCB	MAIN CIRCUIT BREAKER	
MS	MOTOR STARTER	
N	NEUTRAL	
OL'S	OVERLOAD HEATERS	
(3) PM	PHASE MONITOR	
PTS	PUMP TERMINAL STRIP	
R	RELAY	
RC	RUN CAPACITOR	
RD	DISCHARGE RESISTOR	
RL	PUMP RUN INDICATORS	
RTS	REGULATOR TERMINAL STRIP	
SC	START CAPACITOR	
(4) SF	SEAL FAIL (SHAFT)	
SR	START RELAY	
(2) SP	SURGE PROTECTOR	
TTS	THERMAL TERMINAL STRIP	

PANEL WIRING DIAGRAM

PANELS SHALL CONFORM TO FLORIDA DEP 62-604 F.A.C.

(1) GENERATOR RECEPTACLE FOR EMERGENCY POWER CONNECTION WITH INTERLOCK
(2) SURGE PROTECTION AND LIGHTNING PROTECTION ON ALL INCOMING LEGS
(3) PHASE PROTECTION SHALL BE PROVIDED
(4) SHAFT SEAL FAIL DETECTION
(5) ALTERNATOR W/TEST SWITCH
(6) BATTERY BACK-UP UNIT

PANEL MANUFACTURER SHALL BE A "UL" LISTED SHOP.

THREE PHASE WIRING DIAGRAM

U-RED V-WHITE W-BLACK

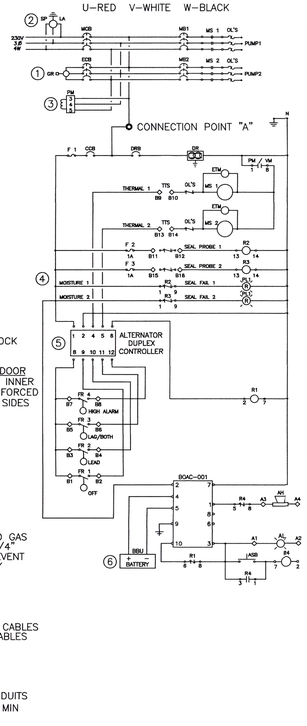

TSC DUPLEX PUMP STATION
FIBERGLASS WET WELL

TECHNICAL SALES CORPORATION
TSC PRE-FAB PUMP SOLUTIONS©
WATERWORKS & WASTEWATER SPECIALTIES
Representing Innovative Manufacturers
MODEL TSC2-48.3©

4621 N. HALE AVENUE PH (813)876-9256
TAMPA, FL 33614 FAX (813)874-1194
EMAIL: Sales@TSCTampa.com
REV-21 SCALE: N.T.S.

SURVEY DATUM NOTE:

ELEVATIONS SHOWN ON THE PLANS ARE BASED ON THE NORTH AMERICAN VERTICAL DATUM OF 1988 (NAVD 88') OBTAINED FROM THE SURVEY PERFORMED BY PULICE LAND SURVEYORS, INC. (PROJECT #69199). LAST REVISION DATED 12/14/21, RECEIVED 03-08-24.

811 SAFETY IS IN YOUR HANDS. EVERY DIG. EVERY TIME.

JOAQUIN A. MOJICA LICENSE No. 60488 STATE OF FLORIDA PROFESSIONAL ENGINEER

APPROVED : JOAQUIN A. MOJICA, P.E.
FLA. REGISTRATION NO. 60488 DATE : 10/24/2025

1	7/22/24	REV. PER DRC COMMENTS	
2	5/10/24	REVIEW SET	
NO.	DATE	REVISIONS	BY

SUN CREDIT UNION

COOPER CITY, FLORIDA
FOR: SUN CREDIT UNION

48" DUPLEX STATION - 2" PIPING, SLIDE RAIL SYSTEM, V.B. W/ DOUBLE DOOR & F.D.E.P. PANEL TSCE2-48.3 R21©

LIFT STATION DETAILS

MILLER LEGG
South Florida Office: 13680 NW 5th Street, Suite 200
Sunrise, Florida 33325
954.486.2700
www.millerlegg.com

CERTIFICATE OF AUTHORIZATION: LB6680

DES	DRWN	CHK
DES.	DWN.	CHK.

PROJECT / FILE NO. 23-00434
DRAWING NO. C5.3
DATE DRAWN: 2/7/25

V:\PROJECTS\2023\23-00434 - SUN CREDIT UNION\DRAWINGS\23-00434_LIFTL.DWG by MORINBANK 2/7/2025 2:28:00 PM

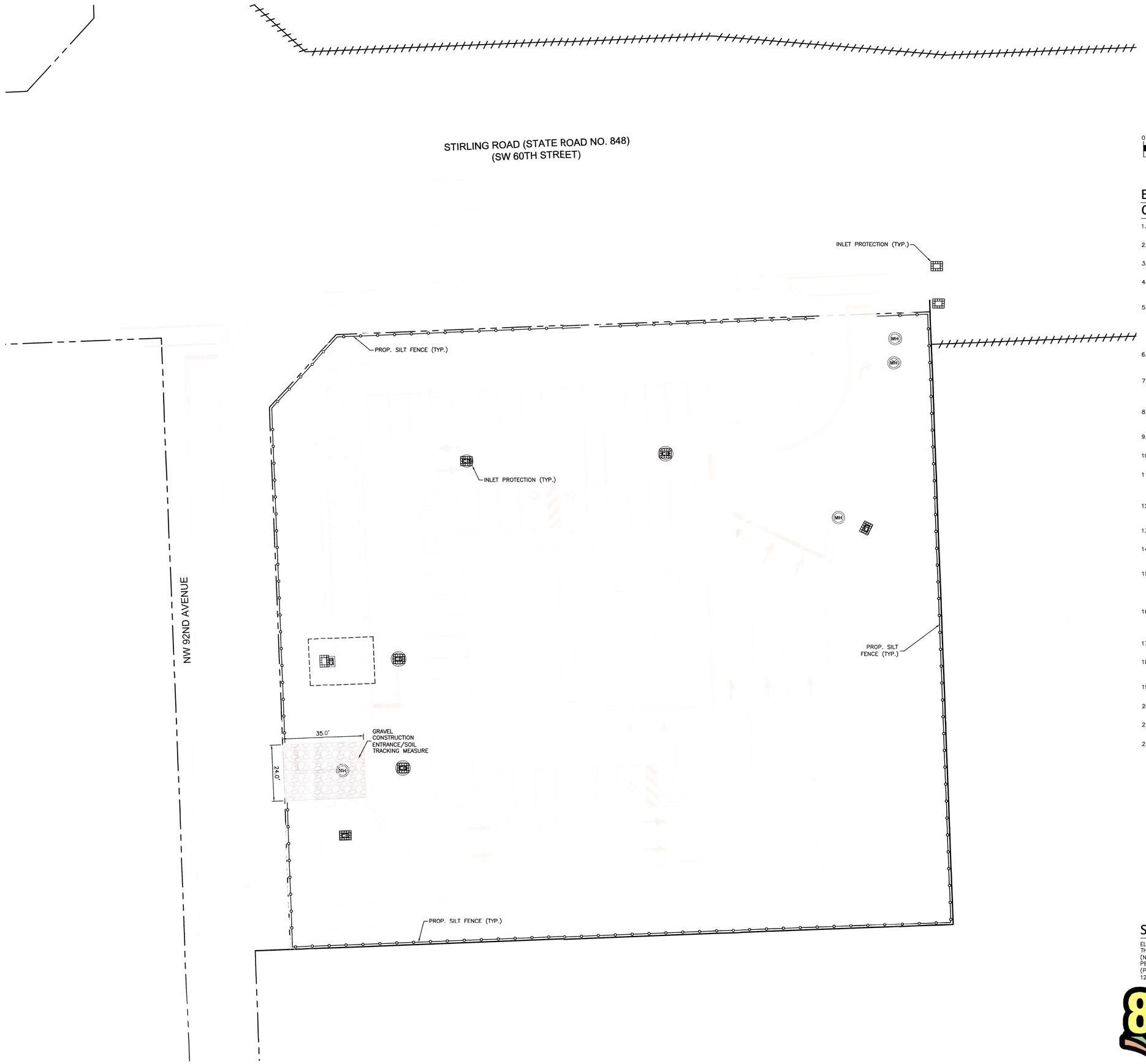

GRAPHIC SCALE

0 10 20 40

(IN FEET)
1 INCH = 20 FEET

EROSION CONTROL & CONSTRUCTION ENTRANCE NOTES:

1. SILT FENCES ARE TO BE REMOVED ONLY AFTER EARTHWORK ACTIVITIES ARE COMPLETED AND SEEDING AND MULCHING HAS TAKEN PLACE.
2. SILT FENCES ALONG WETLAND BUFFERS ARE TO REMAIN IN PLACE FOR AT LEAST 120 DAYS AFTER CONSTRUCTION ACTIVITIES HAVE SEIZED.
3. SOD ALL DISTURBED OR NEWLY CREATED LAKE BANKS AS PER LANDSCAPE AND IRRIGATION SPECIFICATIONS.
4. TURBIDITY CONTROL BARRIERS SHALL BE INSTALLED WITHIN EXISTING LAKES, EXISTING CANALS, ALONG ALL DISTURBED SHORELINES AND WHERE EARTHWORK,(FILL/CUT AND/OR DREDGING) ACTIVITIES ARE TO TAKE PLACE.
5. SILT FENCE ARE TO BE SETBACK AS FOLLOWS:
   –5' FROM FACES OF WALLS/FOOTINGS
   –5' FROM PROPERTY LINES
   –5' FROM WETLAND BUFFERS (EXCEPT WHERE A PROPOSED BUFFER OR WETLAND ENCROACHMENT IS SPECIFIED)
   –5' BEYOND LIMITS OF EARTHWORK (FILL/CUT) OR GRADING ACTIVITIES.
6. ALL EROSION AND SEDIMENT CONTROL WORK SHALL CONFORM WITH LOCAL CITY/COUNTY AND WATER MANAGEMENT DISTRICT SPECIFICATIONS, SUBJECT TO AUTHORIZED AND APPROVED VARIANCES, WAIVERS AND/OR CONDITIONAL CHANGES.
7. EROSION AND SEDIMENT CONTROL MEASURES SHALL BE PLACED PRIOR TO OR AS THE FIRST STEP IN, CONSTRUCTION. SEDIMENT CONTROL PRACTICES WILL BE APPLIED AS A PERIMETER DEFENSE AGAINST ANY TRANSPORTATION OF SILT OFF THE SITE.
8. CONTRACTOR SHALL KEEP ANY AND ALL SAND, SILT OR OTHER DEBRIS FROM MOVING OFF–SITE. USE AND MAINTAIN SILT FENCE JUST INSIDE OF PROPERTY LINE.
9. CONTRACTOR SHALL BLOCK INTRUSION OF SAND, SILT OR OTHER DEBRIS INTO ANY DRAINAGE OR SANITARY SEWER STRUCTURE OR PIPING ON OR ADJACENT TO SITE.
10. ALL CLEARED AREAS FOR IMPROVEMENT AND/OR CONSTRUCTION SHALL BE WATERED TO PREVENT WIND EROSION.
11. ALL AREAS AFFECTED BY THIS WORK SHALL BE RESTORED TO A CONDITION EQUAL TO OR BETTER THAN EXISTING CONDITION, UNLESS SPECIFICALLY EXEMPTED BY THE PLANS. THE COST FOR SUCH RESTORATION SHALL BE INCIDENTAL TO OTHER CONSTRUCTION AND NO ADDITIONAL COMPENSATION SHALL BE ALLOWED.
12. THE CONTRACTOR SHALL IMMEDIATELY NOTIFY THE ENGINEER OF ANY DISCREPANCIES BETWEEN THESE PLANS AND FIELD CONDITIONS PRIOR TO CONSTRUCTION.
13. PRIOR TO CONSTRUCTION THE CONTRACTOR SHALL PROVIDE TREE PROTECTION BARRIERS TO MEET THE REQUIREMENTS OF LOCAL SPECIFICATIONS.
14. THE CONTRACTOR SHALL SELECTIVELY CLEAR ONLY THE ARES REQUIRED FOR CONSTRUCTION AND STABILIZE ANY POTENTIAL EROSION AREAS IMMEDIATELY FOLLOWING COMPLETION OF CONSTRUCTION.
15. CONTRACTOR IS REQUIRED BY NPDES TO KEEP A LOG ON SITE FOR THE SOIL EROSION AND SEDIMENT CONTROL MEASURES INDICATED ON THE PLAN. THE LOG SHALL CONTAIN DATES FOR: INSTALLATION OF CONTROL MEASURES, MAJOR SITE CONSTRUCTION ACTIVITIES, INSPECTION ON AT LEAST A WEEKLY BASIS AND INSPECTION AFTER ANY RAINFALL EVENT THAT IS 1/2" OR GREATER.
16. THE ENTRANCE SHALL BE MAINTAINED IN A CONDITION THAT WILL PREVENT TRACKING OR FLOWING OF SEDIMENT ONTO PUBLIC RIGHTS–OF–WAY. THIS MAY REQUIRE TOP DRESSING, REPAIR AND/OR CLEAN OUT OF ANY MEASURES USED TO TRAP SEDIMENT.
17. WHEN NECESSARY, WHEELS SHALL BE CLEANED PRIOR TO ENTRANCE ONTO PUBLIC RIGHT–OF–WAY.
18. WHEN WASHING IS REQUIRED, IT SHALL BE DONE ON AN AREA STABILIZED WITH CRUSHED STONE THAT DRAINS INTO AN APPROVED SEDIMENT TRAP OR SEDIMENT BASIN.
19. ALL EROSION CONTROL MATERIALS, CONSTRUCTION & MAINTENANCE TO BE PER APPLICABLE SECTIONS OF FDOT STANDARD SPECIFICATION #104.
20. USE SANDBAGS, SYNTHETIC BALES OR OTHER APPROVED METHODS TO CHANNELIZE RUNOFF TO BASIN REQUIRED.
21. COURSE AGGREGATE & FILTER FABRIC TO PER SECTIONS OF FDOT STANDARD SPECIFICATION #901 & #985 RESPECTIVELY.
22. CONTRACTOR TO FOLLOW SILT FENCE INSTALLATION PHASING PER SWPPP.

SURVEY DATUM NOTE:

ELEVATIONS SHOWN ON THE PLANS ARE BASED ON THE NORTH AMERICAN VERTICAL DATUM OF 1988 (NAVD 88') OBTAINED FROM THE SURVEY PERFORMED BY PULICE LAND SURVEYORS, INC. (PROJECT #69199), LAST REVISION DATED 12/14/21, RECEIVED 03–08–24.

811 SAFETY IS IN YOUR HANDS. EVERY DIG. EVERY TIME.

JOAQUIN A. MOJICA LICENSE No. 60488 STATE OF FLORIDA PROFESSIONAL ENGINEER

APPROVED : JOAQUIN A. MOJICA, P.E.
FLA. REGISTRATION NO. 60488 DATE : 10/24/2025

NO.	DATE	REVISIONS	BY
1	7/12/24	REV. PER DRC COMMENTS	
	5/10/24	REVIEW SET	

SUN CREDIT UNION

COOPER CITY, FLORIDA
FOR: SUN CREDIT UNION

STORMWATER POLLUTION PREVENTION PLAN

MILLER LEGG
South Florida Office: 13680 NW 5th Street, Suite 200
Sunrise, Florida 33325
954-436-7000
www.millerlegg.com

CERTIFICATE OF AUTHORIZATION:
LB6680

DES	DRWN	CHK
DES.	DWN.	CHK.

PROJECT / FILE NO.
23–00434

DRAWING NO.
C6.0

DATE DRAWN:
8/27/24

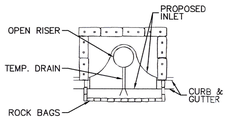

PARTIAL INLET

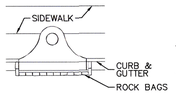

COMPLETED INLET

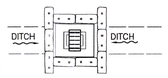

DITCH BOTTOM INLET

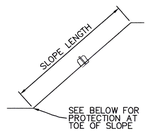

SECTION AA

NOTES:
WHERE THE SLOPE LENGTH EXCEEDS 25 FEET, CONSTRUCT ONE ROW OF BALE BARRIERS AT 0% LONGITUDINAL GRADE MIDWAY UP THE SLOPE. CONSTRUCT TWO ROWS OF BALE BARRIERS WHERE THE SLOPE LENGTH EXCEEDS 50 FEET

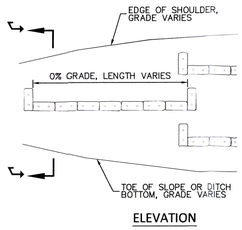

ELEVATION

ALONG FILL SLOPE

PROTECTION AROUND INLETS OR SIMILAR STRUCTURES

N.T.S.

NOTES FOR BAILED HAY OR STRAW BARRIERS

1. TYPE I AND II SYNTHETIC BARRIER SHOULD BE SPACED IN CORACLE WITH CHART I, SHEET I PER INDEX 102 OF THE 2010 FDOT DESIGN STANDARDS.
2. BALES SHALL BE ANCHORED WITH 2-1"" x 2" (OR 1"" DIA.) x 4' WOOD STAKES. STAKES OF OTHER MATERIAL OR SHAPE PROVIDING EQUIVALENT STRENGTH MAY BE USED IF APPROVED BY THE ENGINEER. STAKES OTHER THAN WOOD SHALL BE REMOVED UPON COMPLETION OF THE PROJECT.
3. RAILS AND POSTS SHALL BE 2"x4" WOOD. OTHER MATERIALS PROVIDING EQUIVALENT STRENGTH MAY BE USED IF APPROVED BY THE ENGINEER.
4. ADJACENT BALES SHALL BE BUTTED FIRMLY TOGETHER.
5. WHERE USED IN CONJUNCTION WITH SILT FENCE, BALES SHALL BE PLACED ON THE UPSTREAM SIDE OF THE FENCE.

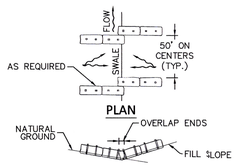

PLAN

ELEVATION

TO BE USED WHERE THE NATURAL GROUND SLOPES TOWARD THE TOE OF SLOPE

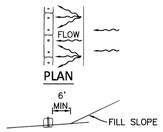

PLAN

ELEVATION

TO BE USED WHERE THE NATURAL GROUND SLOPES AWAY FROM THE TOE OF SLOPE

AT TOE OF SLOPE

BARRIERS FOR FILL SLOPES

N.T.S.

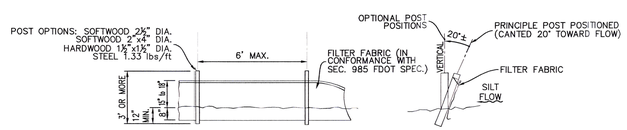

ELEVATION

SECTION

SWPPP-DETAILS
N.T.S.

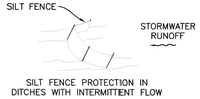

SILT FENCE PROTECTION IN DITCHES WITH INTERMITTENT FLOW

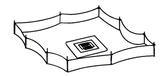

SILT FENCE PROTECTION AROUND DITCH BOTTOM INLETS

NOTES

1. SPACING FOR TYP III FENCE TO BE IN ACCORDANCE WITH CHART 1, SHEET 1 OF 3 AND DITCH INSTALLATIONS OF DRAINAGE STRUCTURES SHEET 2 OF 3 PER 2010 FDOT DESIGN STANDARDS INDEX 102.
2. DO NOT DEPLOY IN A MANNER THAT SILT FENCES WILL ACT AS A DAM ACROSS PERMANENT FLOWING WATERCOURSES. SILT FENCES ARE TO BE USED AT UPLAND LOCATIONS AND TURBIDITY BARRIERS USED AT PERMANENT BODIES OF WATER

SILT FENCE DETAILS

N.T.S.

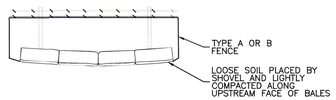

BALES BACKED BY FENCE

N.T.S.

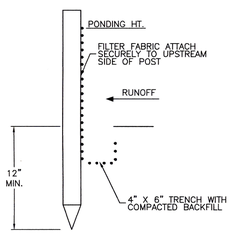

STANDARD DETAIL
N.T.S.
TRENCH WITH NATIVE BACKFILL

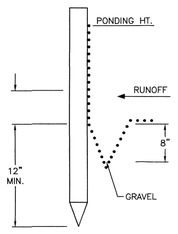

ALTERNATE DETAIL
N.T.S.
TRENCH WITH GRAVEL

NOTES:
1. INSPECT AND REPAIR FENCE AFTER EACH STORM EVENT AND REMOVE SEDIMENT WHEN NECESSARY.
2. REMOVED SEDIMENT SHALL BE DEPOSITED TO AN AREA THAT WILL NOT CONTRIBUTE SEDIMENT OFF-SITE AND CAN BE PERMANENTLY STABILIZED.
3. SILT FENCE SHALL BE PLACED ON SLOPE CONTOURS TO MAXIMIZE PONDING EFFICIENCY.

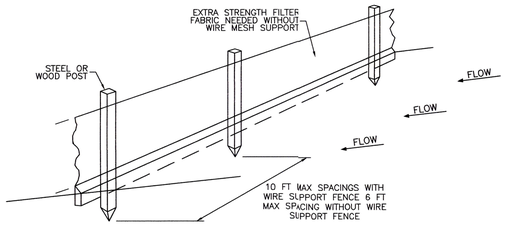

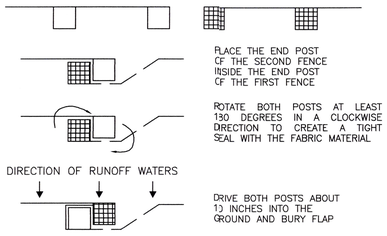

SILT FENCE ATTACHMENT DETAIL

N.T.S.

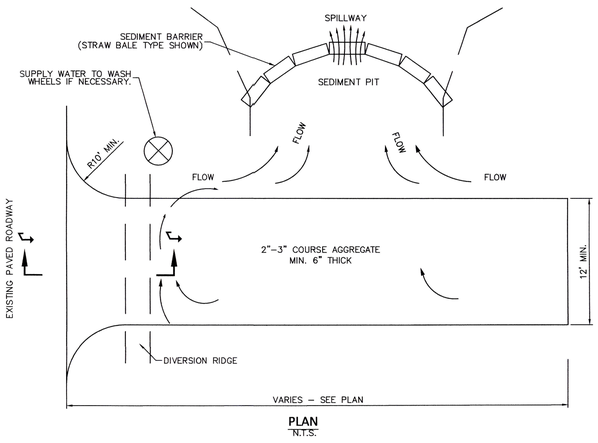

PLAN
N.T.S.

NOTES:
1. THE ENTRANCE SHALL BE MAINTAINED IN A CONDITION THAT WILL PREVENT TRACKING OR FLOWING OF SEDIMENT ONTO PUBLIC RIGHTS-OF-WAY. THIS MAY REQUIRE TOP DRESSING, REPAIR AND/OR CLEANOUT OF ANY MEASURES USED TO TRAP SEDIMENT.
2. WHEN NECESSARY, WHEELS SHALL BE CLEANED PRIOR TO ENTRANCE ONTO PUBLIC RIGHT-OF-WAY.
3. WHEN WASHING IS REQUIRED, IT SHALL BE DONE ON AN AREA STABILIZED WITH CRUSHED STONE THAT DRAINS INTO AN APPROVED SEDIMENT TRAP OR SEDIMENT BASIN.

SOIL TRACKING MEASURES (TEMPORARY CONSTRUCTION ENTRANCE)

N.T.S.

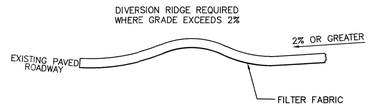

SECTION `A - A'
N.T.S.

NOTE:
USE SANDBAGS, STRAW BALES OR OTHER APPROVED METHODS TO CHANNELIZE RUNOFF TO BASIN AS REQUIRED.

GENERAL NOTES

TEMPORARY ACCESS ROADS AND PARKING AREAS:

1. TEMPORARY ROADS SHALL FOLLOW THE CONTOUR OF THE NATURAL TERRAIN TO THE EXTENT POSSIBLE. SLOPES SHOULD NOT EXCEED 10 PERCENT.
2. TEMPORARY PARKING AREAS SHOULD BE LOCATED ON NATURALLY FLAT AREAS TO MINIMIZE GRADING. GRADES SHOULD BE SUFFICIENT TO PROVIDE DRAINAGE BUT SHOULD NOT EXCEED 4 PERCENT.
3. ROADBEDS SHALL BE AT LEAST 14 FEET (5.5 m) WIDE FOR ONE-WAY TRAFFIC AND 20 FEET (8 m) WIDE FOR TWO-WAY TRAFFIC.
4. ALL CUTS AND FILLS SHALL HAVE SIDE SLOPES THAT ARE STABLE FOR THE PARTICULAR SOIL. SLOPES OF 2:1 OR FLATTER ARE RECOMMENDED FOR CLAY SOILS, AND SLOPES OF 3:1 OR FLATTER ARE RECOMMENDED FOR SANDY SOILS.
5. STORMWATER SYSTEM SHALL BE PROVIDED AS NEEDED AND SHALL BE DESIGNED AND CONSTRUCTED ACCORDING TO APPLICABLE REGULATIONS.
6. THE ROADBED OR PARKING SURFACE SHALL BE CLEARED OF ALL VEGETATION, ROOTS, AND OTHER OBJECTIONABLE MATERIAL.
7. A 6 INCH (15 cm) COURSE OF FDOT NO. 1 AGGREGATE SHALL BE APPLIED IMMEDIATELY AFTER GRADING OR THE COMPLETION OF UTILITY INSTALLATION WITHIN THE RIGHT-OF-WAY AND/OR SITE. FILTER FABRIC MAY BE APPLIED TO THE ROADBED FOR ADDITIONAL STABILITY ACCORDING TO THE FABRIC MANUFACTURER'S SPECIFICATIONS, IF NECESSARY PER UNDERLYING SOILS CONDITION AND CONSTRUCTION NEEDS.

811 SAFETY IS IN YOUR HANDS. EVERY DIG. EVERY TIME.

JOAQUIN A. MOJICA LICENSE No. 60488 STATE OF FLORIDA PROFESSIONAL ENGINEER

APPROVED : JOAQUIN A. MOJICA, P.E.
FLA. REGISTRATION NO. 60488 DATE : 10/24/2025

NO.	REVISIONS	DATE
1	REVIEW SET	5/10/24
2	REV. PER DRC COMMENTS	7/22/24

SUN CREDIT UNION

COOPER CITY, FLORIDA
FOR: SUN CREDIT UNION

STORMWATER POLLUTION PREVENTION DETAILS

MILLER LEGG
South Florida Office: 13680 NW 5th Street, Suite 200
Sunrise, Florida 33325
954-635-7000
www.millerlegg.com

CERTIFICATE OF AUTHORIZATION: LB6680

DES.	DRWN	CHK.
DES.	DWN.	CHK.

PROJECT / FILE NO. 23-00434
DRAWING NO. C6.1
DATE DRAWN: 8/27/24

V:\PROJECTS\2023\23-00434 - SUN CREDIT UNION\DRAWINGS\23-00434_SWPP.DWG by MDUNSHEE 12/12/2024 4:27:33 PM

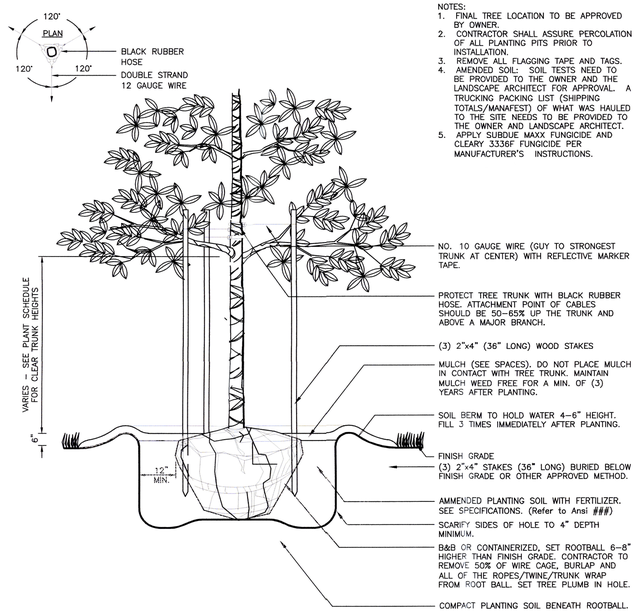

NOTES:
1. FINAL TREE LOCATION TO BE APPROVED BY OWNER.
2. CONTRACTOR SHALL ASSURE PERCOLATION OF ALL PLANTING PITS PRIOR TO INSTALLATION.
3. REMOVE ALL FLAGGING TAPE AND TAGS.
4. AMENDED SOIL: SOIL TESTS NEED TO BE PROVIDED TO THE OWNER AND THE LANDSCAPE ARCHITECT FOR APPROVAL. A TRUCKING PACKING LIST (SHIPPING TOTALS/MANAFEST) OF WHAT WAS HAULED TO THE SITE NEEDS TO BE PROVIDED TO THE OWNER AND LANDSCAPE ARCHITECT.
5. APPLY SUBDUE MAXX FUNGICIDE AND CLEARY 3336F FUNGICIDE PER MANUFACTURER'S INSTRUCTIONS.

(Less than 14' HT) SMALL TREE PLANTING DETAIL

N.T.S.

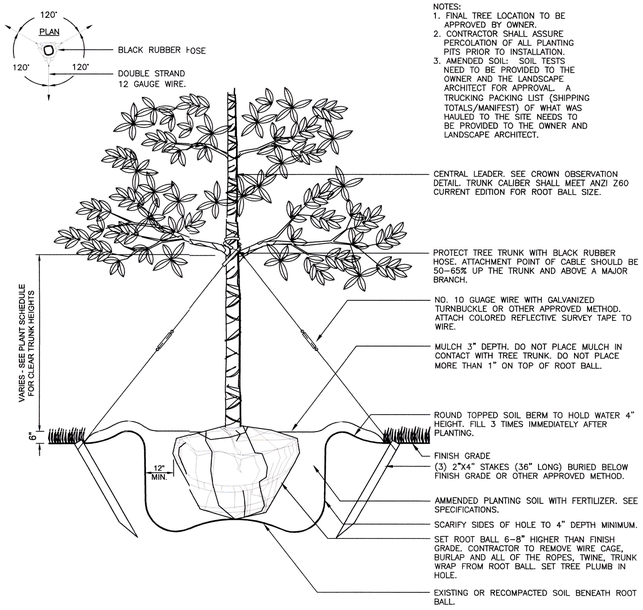

NOTES:
1. FINAL TREE LOCATION TO BE APPROVED BY OWNER.
2. CONTRACTOR SHALL ASSURE PERCOLATION OF ALL PLANTING PITS PRIOR TO INSTALLATION.
3. AMENDED SOIL: SOIL TESTS NEED TO BE PROVIDED TO THE OWNER AND THE LANDSCAPE ARCHITECT FOR APPROVAL. A TRUCKING PACKING LIST (SHIPPING TOTALS/MANIFEST) OF WHAT WAS HAULED TO THE SITE NEEDS TO BE PROVIDED TO THE OWNER AND LANDSCAPE ARCHITECT.

(2" cal. and over) LARGE TREE PLANTING DETAIL

N.T.S.

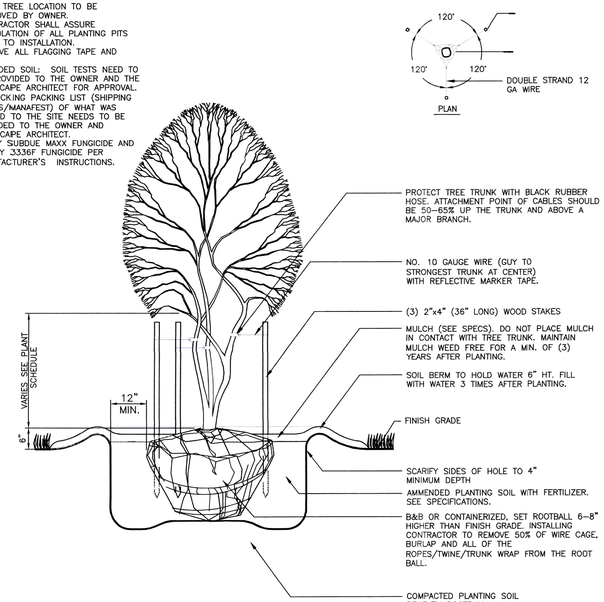

NOTES:
1. FINAL TREE LOCATION TO BE APPROVED BY OWNER.
2. CONTRACTOR SHALL ASSURE PERCOLATION OF ALL PLANTING PITS PRIOR TO INSTALLATION.
3. REMOVE ALL FLAGGING TAPE AND TAGS.
4. AMENDED SOIL: SOIL TESTS NEED TO BE PROVIDED TO THE OWNER AND THE LANDSCAPE ARCHITECT FOR APPROVAL. A TRUCKING PACKING LIST (SHIPPING TOTALS/MANAFEST) OF WHAT WAS HAULED TO THE SITE NEEDS TO BE PROVIDED TO THE OWNER AND LANDSCAPE ARCHITECT.
5. APPLY SUBDUE MAXX FUNGICIDE AND CLEARY 3336F FUNGICIDE PER MANUFACTURER'S INSTRUCTIONS.

MULTI TRUNK TREE PLANTING DETAIL

N.T.S.



NOTES:
1. FINAL TREE STAKING DETAILS AND PLACEMENT TO BE APPROVED BY LANDSCAPE ARCHITECT.
2. CONTRACTOR SHALL ASSURE PERCOLATION OF ALL PLANTING PITS PRIOR TO INSTALLATION.
3. WATER RING TO BE FILLED 3 TIMES IMMEDIATELY AFTER PLANTING.

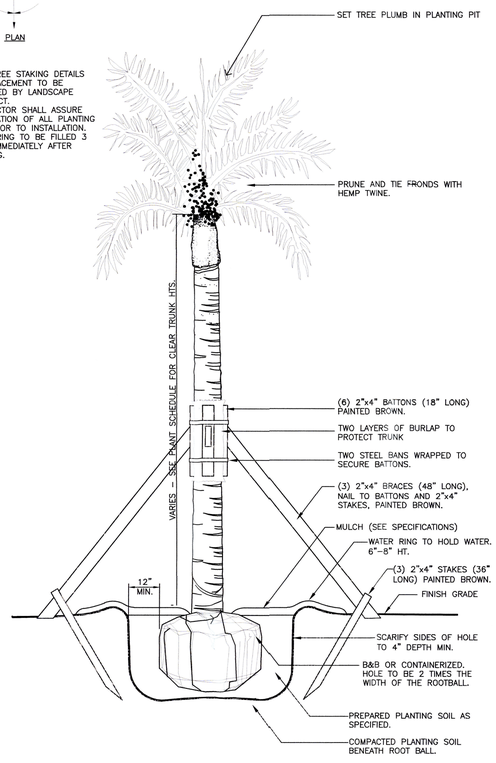

ROYAL PALM PLANTING DETAIL

N.T.S.

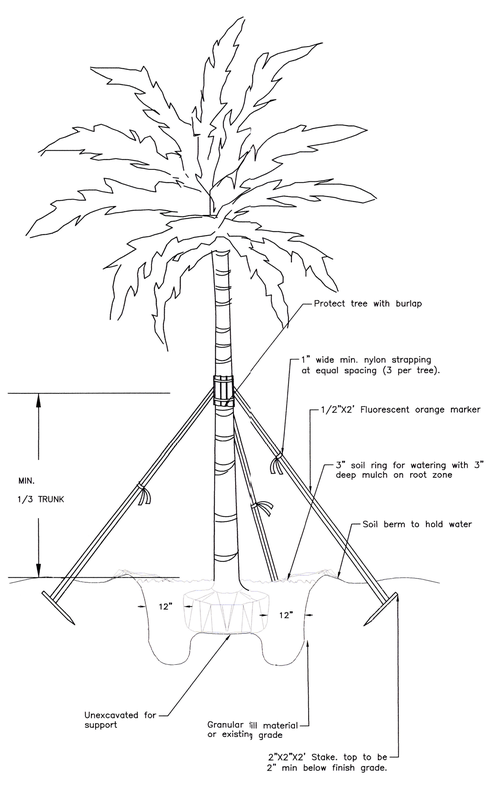

SLENDER PALM PLANTING DETAIL

N.T.S.

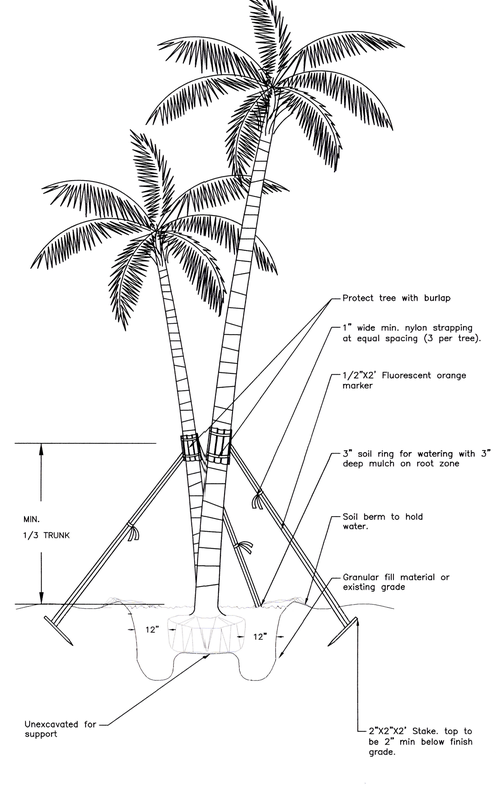

MULTI-TRUNK PALM PLANTING DETAIL

N.T.S.

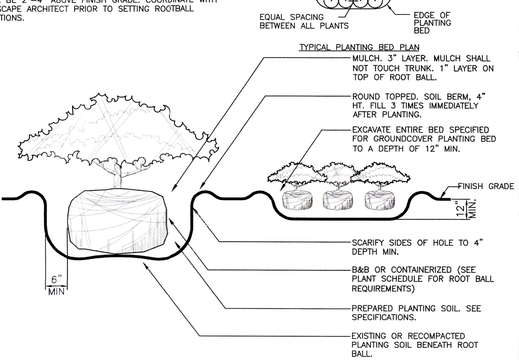

NOTES:
1. CONTRACTOR SHALL ASSURE PERCOLATION OF ALL PLANTING PITS PRIOR TO INSTALLATION.
2. IN SEMI-IMPERVIOUS SOIL CONDITIONS, ROOTBALL ELEVATION SHALL BE 2"-4" ABOVE FINISH GRADE. COORDINATE WITH LANDSCAPE ARCHITECT PRIOR TO SETTING ROOTBALL ELEVATIONS.

SHRUB PLANTING DETAIL

N.T.S.

NOTES:

REV.	DATE	DESCRIPTION	BY
1	7/22/24	REV. PER DRC COMMENTS	MB
0	5/10/24	REVIEW SET	MB

SUN CREDIT UNION

COOPER CITY, FLORIDA
FOR: SUN CREDIT UNION

LANDSCAPE DETAILS

MILLER LEGG
South Florida Office: 13680 NW 5th Street, Suite 200
Sunrise, Florida : 33325
954-436-7000
www.millerlegg.com

CERTIFICATE OF AUTHORIZATION: LB6680

MB	JRO	BS
DES.	DWN.	CHK.

PROJECT / FILE NO. 23-00434

DRAWING NO. L2.1

DATE DRAWN: 1/31/25

LANDSCAPE ARCHITECT BRIAN R. SHORE LA6666770 STATE OF FLORIDA

APPROVED : BRIAN R. SHORE, RLA
FLA. REGISTRATION NO. LA6666770 DATE : 10/24/2025

V:_PROJECTS\2023\23-00434 - SUN CREDIT UNION\DRAWINGS\23-00434_LD.DWG by MGRINBANK 10/24/2025 7:00:11 AM

LANDSCAPE REQUIREMENTS

PERIMETER LANDSCAPE REQUIREMENTS FOR VEHICULAR USE AREAS
Street Lot Lines - Where vua are located adjacent to street lot lines

Min. 25' wide landscape buffer,
(1) tree / 25 lf and a continuous hedge for screening

Stirling Road -
240 lf / 25 = (10) trees req'd and provided

NW 92th Ave. -
Min. 3' wide landscape buffer,

Interior Lot Lines - Where vua are located adjacent to interior lot lines
Min. 3' wide landscape buffer,
(1) tree / 40 lf

South -
225 lf / 40 = (6) trees req'd and provided

East-
234 lf / 40 = (6) trees req'd and provided

INTERIOR LANDSCAPE REQUIREMENT FOR VEHICULAR USE AREAS
(10) sf of interior landscaping for each parking space, excluding those spaces abutting a perimeter.
In addition (1) sf of landscape area for each 100 sf or fraction there of paved area
(23) x 10 sf = 230 sf req'd
28,990 sf / 100 sf x 1 sf = 290 sf req'd
Total = 230 + 290 = 520 sf req'd
Each separate landscaped area shall contain a min. of 45 sf and (1) tree, with the remaining area landscaped with shrubs, groundcover

TERMINAL ISLANDS
Min. (2) trees shall be planted in each terminal island (14) trees req'd and provided

INTERIOR ISLANDS
Min. (1) trees shall be planted in each interior island (2) trees req'd and provided

LANDSCAPED STREET BUFFERS
25' wide buffer for site 100 feet wide or greater A 42" high berm @ 3 to 1 slope required along 75% of the buffer strip,
(40) shrubs per 40 lf,
(1) tree per 30 lf

Stirling Road -
258 lf / 40 = 6.45 x 40 = 258 shrubs req'd and 393 shrubs provided
258 lf / 30 lf = (9) trees

NW 92th Ave. -
230 lf / 40 = 5.75 X 40 = 230 shrubs req'd and 285 shrubs provided
230 lf / 30 = (8) trees req'd and provided

SUPPLEMENTAL LANDSCAPE REQUIREMENT
(1) tree and (5) shrubs for every 1,000 sf of lot area not utilized for parking
45,600 lf / 1,000 = (46) trees req'd and provided
46 x 5 = 230 shrubs req'd and provided

TREE SPECIES MIX REQUIREMENT

Required number of trees	Min. number of Species
11-20	2
21-30	3
31-40	4
41 +	5

A min. 50% of all required trees must be shade trees

TREE MITIGATION:
Value of trees removed= $1,800
Value of trees added= $18,445

ADDITIONAL NOTES:
All areas of new planting shall be mulched with grade 'A' Pine bark mulch or approved equivalent as mandated by City of Cooper city

Areas not planted with trees, shrubs, or groundcover shall be sodded with bahia sod.

Contractor shall install new irrigation system to provide 100% coverage to all landscape areas.

GENERAL NOTES:

1. PLANT MATERIAL: ALL PLANT MATERIAL SHALL BE FLORIDA #1 OR BETTER AS ESTABLISHED BY "GRADES AND STANDARDS FOR NURSERY PLANTS" OF THE STATE OF FLORIDA, DEPARTMENT OF AGRICULTURE.
2. ALL TREES, SHRUBS AND GROUNDCOVERS SHALL BE OF THE SIZES AS SPECIFIED IN THE PLANT LIST.
3. QUANTITIES LISTED ON THE THE PLANT LIST ARE FOR ESTIMATING PURPOSES. CONTRACTOR SHALL VERIFY ALL QUANTITIES. MULCH, TOPSOIL, FERTILIZER, ETC. SHALL BE INCLUDED IN THE UNIT COST OF THE PLANTS.
4. WHERE THERE IS A DISCREPANCY EITHER IN QUANTITIES, PLANT NAMES, SIZES OR SPECIFICATIONS BETWEEN THE PLAN OR PLANT LIST, THE PLAN TAKES PRECEDENCE.
5. ALL PLANTING BEDS AND WATER BASINS FOR TREES SHALL BE COVERED WITH A 3" MINIMUM DEPTH OF GRADE "A" PINE BARK OR CITY APPROVED EQUAL.
6. THE PLANTING PLAN SHALL BE INSTALLED IN COMPLIANCE WITH ALL EXISTING CODES AND APPLICABLE DEED RESTRICTIONS.
7. SOD: ALL AREAS NOT USED FOR BUILDINGS, VEHICULAR USE AREAS, WALKS OR PLANTING BEDS SHALL BE GRASSED. GRASSING SHALL EXTEND TO ANY ABUTTING STREET PAVEMENT EDGE AND TO THE MEAN WATERLINE OF ANY ABUTTING CANAL, LAKE OR WATERWAY.
8. PLANTING SOIL: ALL TREES AND SHRUBS SHALL BE PLANTED WITH A MINIMUM OF 12" TOPSOIL AROUND AND BENEATH THE ROOTBALL. MINIMUM TOPSOIL SHALL BE 6" FOR GROUNDCOVER AREAS AND 2" FOR SODDED GRASS AREAS.
9. PLANTING SOIL TO BE A WEED-FREE MIXTURE OF 50% SAND, 40% MUCK, AND 10% CANADIAN PEAT. ALL PLANT MATERIAL TO RECEIVE PLANTING SOIL AS PER DETAILS.
10. CONTRACTOR IS RESPONSIBLE FOR DETERMINING ALL UTILITY LOCATIONS AND INSTALLING FACILITIES SO AS TO NOT CONFLICT. ALL DAMAGE TO EXISTING UTILITIES OR IMPROVEMENTS CAUSED BY CONTRACTOR SHALL BE REPAIRED AT NO ADDITIONAL COST TO THE OWNER.
11. CONTRACTOR TO NOTIFY "SUNSHINE STATE ONE CALL OF FLORIDA, INC." AT 1-800-432-4770 TWO FULL BUSINESS DAYS PRIOR TO DIGGING FOR UNDERGROUND UTILITY LOCATIONS.
12. CONTRACTOR SHALL BE RESPONSIBLE FOR PROVIDING FINAL GRADING OF ALL ASSOCIATED PLANTING AREAS.
13. AFTER FINAL GRADE, AREA TO BE RAKED TO 6" DEPTH AND ALL ROCK AND FOREIGN INORGANIC MATERIALS REMOVED AND DISPOSED OF PROPERLY OFF-SITE.
14. ALL PLANTING HOLES TO BE HAND DUG EXCEPT WHERE MACHINE DUG HOLES WILL NOT ADVERSELY AFFECT OR DAMAGE UTILITIES OR IMPROVEMENTS (SEE NOTE 8).
15. NO PLUNGING OF ANY TREE OR PALM WILL BE ACCEPTED. ALL PLANTS TO BE PLANTED AT THE NURSERY GRADE OR SLIGHTLY HIGHER.
16. CONTRACTOR SHALL STAKE & GUY ALL TREES AND PALMS AT TIME OF PLANTING AS PER THE APPROPRIATE DETAIL. CONTRACTOR IS RESPONSIBLE FOR THE MAINTENANCE AND/OR REPAIR OF ALL STAKING AND GUYING DURING WARRANTY PERIOD AND REMOVAL & DISPOSAL OF STAKING AFTER ESTABLISHMENT PERIOD.
17. FERTILIZER FOR GRASS AREAS SHALL BE NPK 16-4-8 @ 12.5 LBS/1000 S.F. OR 545 LBS/ACRE. NITROGEN 50% SLOW RELEASE FORM & FERTILIZER TO INCLUDE SECONDARY MICRONUTRIENTS.
18. SUBSTITUTIONS AND CHANGES: ALL SUBSTITUTIONS AND CHANGES SHALL BE APPROVED IN WRITING PRIOR TO INSTALLATION. ANY DISCREPANCIES BETWEEN PLANS, SITE AND SPECIFICATIONS SHALL BE BROUGHT TO THE IMMEDIATE ATTENTION OF THE LANDSCAPE ARCHITECT, THE OWNER AND GOVERNING MUNICIPALITY
19. WATERING: ALL PLANT MATERIAL SHALL BE WATERED IN AT TIME OF PLANTING IN ACCORDANCE WITH STANDARD NURSERY PRACTICES. IN ADDITION, CONTRACTOR WILL CONTINUE WATERING OF PLANT MATERIAL UNTIL SUBSTANTIAL COMPLETION AND AS NEEDED THEREAFTER FOR A PERIOD OF 2 MONTHS.
20. ALL NEW PLANT MATERIAL SHALL BE GUARANTEED FOR 1 YEAR FROM TIME OF FINAL ACCEPTANCE OF PROJECT. ANY PLANT MATERIAL NOT IN A HEALTHY GROWING CONDITION WILL BE REPLACED BY THE CONTRACTOR AT NO ADDITIONAL COST TO THE OWNER WITHIN 10 DAYS OF NOTIFICATION. FOR ALL REPLACEMENT PLANT MATERIAL, THE WARRANTY PERIOD SHALL BE EXTENDED AN ADDITIONAL 45 DAYS BEYOND THE ORIGNAL WARRANTY PERIOD. ALL TREES THAT LEAN OR ARE BLOWN OVER, CAUSED BY WINDS LESS THAN 75 MPH, WILL BE RE-SET AND BRACED BY THE CONTRACTOR AT NO ADDITIONAL COST TO THE OWNER.
21. THE SUCCESSFUL BIDDER SHALL FURNISH TO THE OWNER A UNIT PRICE BREAKDOWN FOR ALL MATERIALS. THE OWNER MAY, AT ITS DISCRETION, ADD OR DELETE FROM THE MATERIALS UTILIZING THE UNIT PRICE BREAKDOWN SUBMITTED.
22. NO PLANT MATERIAL WILL BE ACCEPTED SHOWING EVIDENCE OF CABLE, CHAIN MARKS, EQUIPMENT SCARS, OR OTHERWISE DAMAGED.
23. PLANT MATERIAL WILL NOT BE ACCEPTED WHEN THE BALL OF EARTH SURROUNDING ITS ROOTS HAS BEEN CRACKED, BROKEN OR OTHERWISE DAMAGED.
24. ROOT-PRUNE ALL TREES A MINIMUM OF (12) WEEKS PRIOR TO PLANTING.
25. ALL PLANT MATERIAL PLANTED WITHIN THE SIGHT DISTANCE TRIANGLE AREAS (SEE PLAN) SHALL PROVIDE UNOBSTRUCTED CROSS-VISIBILITY AT A HORIZONTAL LEVEL BETWEEN 30 INCHES AND 8 FEET ABOVE ADJACENT STREET GRADE.
26. NO CANOPY TREES SHALL BE PLANTED WITHIN 12 FEET OF A LIGHT POLE. NO PALM SPECIES SHALL BE PLANTED WITHIN 6 FEET OF A LIGHT POLE.
27. TREE PROTECTION BARRICADES SHALL BE PROVIDED BY LANDSCAPE CONTRACTOR AROUND EXISTING TREES THAT MAY BE IMPACTED BY THE PROPOSED CONSTRUCTION. PRIOR TO ANY CONSTRUCTION A TREE PROTECTION BARRICADE INSPECTION SHALL BE CONDUCTED BY THE LANDSCAPE ARCHITECT, OWNER OR GOVERNING MUNICIPALITY. REFER TO LANDSCAPE DETAIL FOR TREE PRESERVATION BARRICADE FENCING.
28. IN ALL PEDESTRIAN AREAS, ALL TREES AND PALMS SHALL BE MAINTAINED TO ALLOW FOR CLEAR PASSAGE AT AN 8 FOOT CLEAR TRUNK.
29. ALL LANDSCAPE MATERIAL SHALL BE SETBACK A MINIMUM OF 10' FROM ANY FIRE HYDRANT.
30. WATERING REQUIREMENTS.
PROVIDED A MINIMUM 12 WEEKS OF WATERING AFTER RELOCATION. SUBMIT A WATERING SCHEDULE PRIOR TO ROOT PRUNING INCLUDING ANTICIPATED FREQUENCY AND VOLUME BASED UPON THE RECOMMENDED SCHEDULE BELOW.

RECOMMENDED WATER REQUIREMENTS				
WEEK 1-3	WEEK 3-6	WEEK 6-8	WEEK 8-11	WEEK 12
4 TIMES PER WEEK	3 TIMES PER WEEK	3 TIMES PER WEEK	2 TIMES PER WEEK	2 TIMES PER WEEK

31. ROOT PRUNE NOTES:
   a. ROOT PRUNING SHALL BE DONE WHENEVER THERE WILL BE GRADING, CUTTING OR COMPACTION DISTURBANCE UNDERNEATH THE DRIP LINE OF A TREE. PRIOR TO ANY WORK WITHIN DRIP LINE, CONTRACTORS SHOULD CONTACT LANDSCAPE ARCHITECT TO COORDINATE WORK. ROOT PRUNING SHALL BE DONE PRIOR TO DISTURBANCE OF THE SITE. NO DISTURBANCE SHALL BE DONE WITHIN A DISTANCE OF 3X THE DIAMETER OF THE TREE, DUE TO STABILITY CONCERNS.
   b. BEFORE DISTURBANCE, MEET WITH LANDSCAPE ARCHITECT ON SITE TO CONFIRM LOCATION OF ROOT PRUNING. ROOT PRUNING SHALL BE CONDUCTED AT AN AGREED UPON LOCATION. THIS LOCATION WILL BE MARKED ON THE GROUND BETWEEN THE DISTURBANCE AND THE TREE, TYPICALLY 6" CLOSER TO THE TREE THAN EDGE THE DISTURBANCE.
   c. ALL ROOTS 3/4"-1.5"DIAMETERS MUST BE PRUNED. F 2.5" OR LARGER ROOTS ARE ENCOUNTERED, STOP PRUNING IN THAT AREA AND CONTACT LANDSCAPE ARCHITECT. ROOT PRUNING SHALL ONLY BE AS DEEP AS NECESSARY TO ENSURE THE CUTTING OF ALL ROOTS WHICH WOULD BE IMPACTED BY THE DISTURBANCE.
   d. ROOT PRUNING SHALL BE DONE WITH A SHARP TOOL, IN SUCH A WAY THAT DOES NOT PULL ON THE ROOTS, BUT LEAVES SMOOTH CUTS. IT IS PREFERABLE TO EXPOSE THE ROOTS PRIOR TO ROOT PRUNING. AFTER PRUNING, FILL THE AREA WITH QUALITY TOPSOIL AND WATER UNTIL THOROUGHLY SOAKED.
   e. ONCE EXPOSED, ROOTS MUST BE COVERED WITHIN 8 HOURS. IF ROOTS WILL BE LEFT EXPOSED FOR LONGER THAN 8 HOURS, THEY MUST BE KEPT MOIST. ONE OPTION IS TO PUT MOIST BURLAP OVER THE EXPOSED ROOTS. HYDRATE ROOT PRUNE TRENCH TO MAINTAIN MOISTURE AS NECESSARY UNTIL RELOCATION OF PLANT MATERIAL.
   f. ROOT PRUNING SHALL BE DONE BY OR UNDER THE SUPERVISION OF AN ISA CERTIFIED ARBORIST, AND MEET OR EXCEED ANSI A300 OR APPROVED TREE CARE INDUSTRY STANDARDS. A CERTIFIED ARBORIST MUST BE ONSITE DURING THE ENTIRETY OF ROOT PRUNING.
   g. ALL ROOT PRUNING SHALL BE DONE PER ANSI A300
32. ROOT-PRUNE MINIMUM OF (12) WEEKS PRIOR TO RELOCATE TREES.

PLANT SCHEDULE

SYMBOL	CODE	BOTANICAL / COMMON NAME	SIZE	CALIPER	HEIGHT	SPREAD	QTY	CLASS	VALUE
TREES									
	CE	Conocarpus erectus / Buttonwood	Field Grown	3" CAL	MIN 15' OAH	5' SPR.	4	B	$195
	CS	Conocarpus erectus f. sericeus / Silver Buttonwood	Field Grown	3" CAL	15` OAH	5' SPR.	13	B	$195
	EF	Eugenia foetida / Spanish Stopper	Field Grown	3" CAL		5' SPR.	12	A	$270
	LN	Lagerstroemia indica x fauriei 'Natchez' / Natchez Crape Myrtle	Field Grown	3" CAL	15` OAH	5' SPR.	9	B	$195
	LJ	Ligustrum japonicum / Japanese Privet	Field Grown	Multi-Trunk	12` OAH	6` SPR.	15	B	$260
	QV	Quercus virginiana / Live Oak	Field Grown	3" CAL	14` OAH	6` SPR.	1	A	$270
	TC	Tabebuia chrysotricha / Golden Trumpet Tree	Field Grown	3" CAL	15` OAH	5' SPR.	6	A	$270
LARGE PALMS									
	RE	Roystonea elata / Florida Royal Palm	Field Grown		8'-12' GW		13	A	$11,200
	SS	Sabal palmetto / Cabbage Palmetto	Field Grown		12'-18' CT		14	B	$5,150
SMALL PALMS									
	AM	Adonidia merrillii / Manila Palm	Field Grown	Multi-Trunk	10-12` OAH		1	C	$200
	PR	Phoenix roebelenii / Pygmy Date Palm	Field Grown	Multi-Trunk	6` OAH		3	C	$240
SYMBOL	CODE	BOTANICAL / COMMON NAME	SIZE	SPACING	HEIGHT	SPREAD	QTY		
SHRUBS									
	BOU	Bougainvillea glabra / Bougainvillea	7 GAL.	36" HT.	24"		3		
	CHR	Chrysobalanus icaco / Coco Plum	3 GAL	24" HT.	30"		78		
	GAL	Galphimia gracilis / Rain of Gold	3 GAL	24" HT.	36"		12		
	STR	Strelitzia reginae / Bird Of Paradise	7 GAL.	36" HT.	24"		14		
SYMBOL	CODE	BOTANICAL / COMMON NAME	SIZE	HEIGHT	SPREAD	NATIVE	QTY		
SHRUB AREAS									
	CI	Chrysobalanus icaco / Coco Plum	7 GAL	36" HT.	24" OC		335		
	DIA	Dianella tasmanica 'Variegata' / Variegated Flax Lily	1 GAL	12" HT.	12" OC		473		
	FIC	Ficus microcarpa 'Green Island' / Green Island Ficus	3 GAL	18" HT.	12" OC		949		
	IXO	Ixora coccinea / Ixora	3 GAL	24" HT.	30" O.C.		91		
	JUN	Juniperus chinensis 'Parsonii' / Parsoni Juniper	3 GAL	12" HT.	18" O.C.		920		
	LIR	Liriope muscari 'Emerald Goddess' / Emerald Goddess Lilyturf	1 GAL	12" HT.	18" O.C.		855		
	MUH	Muhlenbergia capillaris / Pink Muhly Grass	3 GAL	36" HT.	24" OC		141		
	POD	Podocarpus macrophyllus / Podocarpus	3 GAL	42" HT	24" OC		30		
	POM	Podocarpus macrophyllus 'Pringles' / Pringles Dwarf Podocarpus	3 GAL	12" HT.	18" O.C.		313		
	SCH	Schefflera arboricola 'Variegata' / Dwarf Variegated Schefflera	3 GAL	12" HT.	18" O.C.		120		
	THA	Thaumatophyllum xanadu / Xanadu Philodendron	3 GAL	24" HT.	30" O.C.		56		
	ZAM	Zamia pumila / Coontie Cycad	3 GAL	36" HT.	30" O.C.		21		
SYMBOL	CODE	BOTANICAL / COMMON NAME	CONT	HT			QTY		
GROUND COVERS									
	SOD	Stenotaphrum secundatum / St. Augustine Grass	FLAT				35,298 sf		

NO.	DATE	REVISIONS	BY
1	7/22/24	REV. PER DRC COMMENTS	MB
	5/10/24	REVIEW SET	MB

SUN CREDIT UNION
COOPER CITY, FLORIDA
FOR: SUN CREDIT UNION

MILLER LEGG
South Florida Office: 13680 NW 5th Street, Suite 200
Sunrise, Florida 33325
954-499-7000
www.millerlegg.com

LANDSCAPE NOTES AND SCHEDULE

LANDSCAPE ARCHITECTURE BRIAN R. SHORE LA6666770 STATE OF FLORIDA

APPROVED : BRIAN R. SHORE, RLA
FLA. REGISTRATION NO. LA6666770 DATE : 10/24/2025

CERTIFICATE OF AUTHORIZATION: LB6680

MB	JRO	BS
DES.	DWN.	CHK.

PROJECT / FILE NO. 23-00434
DRAWING NO. L2.2
DATE DRAWN: 1/31/25

V:\PROJECTS\2023\23-00434 - SUN CREDIT UNION\DRAWINGS\23-00434_LD.DWG by MGRINBANK 10/24/2025 7:00:11 AM



GRAPHIC SCALE
0 10 20 40
(IN FEET)
1 INCH = 20 FEET

NOTE: ALL PLANT MATERIAL WITHIN PROJECT LIMITS TO BE REMOVED

TREE DISOPOSITION

Common Name	Scientific Name	Height (ft)	Spread (ft)	DBH (in.)	Class	Value ($)	Disposition	Comments
Bishopwood	Bischofia javanica	30	40	14	C	1050	Remove	Category I Invasive Exotic
Areca Palm	Dypsis lutescens	25	20	N/A, Multi-Trunk	C	750	Remove	Approximately 10 Clusters Grown Together

LANDSCAPE ARCHITECT
BRIAN R. SHORE
LA6666770
STATE OF FLORIDA

APPROVED : BRIAN R. SHORE, RLA
FLA. REGISTRATION NO. LA6666770 DATE : 10/24/2025

NO.	DATE	REVISIONS
1	7/22/24	REV. PER DRC COMMENTS
	5/10/24	REVIEW SET

SUN CREDIT UNION

COOPER CITY, FLORIDA
FOR: SUN CREDIT UNION

TREE DISPOSITION PLAN

MILLER LEGG
South Florida Office: 13680 NW 5th Street, Suite 200
Sunrise, Florida 33325
954.451.7000
www.millerlegg.com

CERTIFICATE OF AUTHORIZATION: LB6680

DES.	DWN.	CHK.
MB	JRO	BS

PROJECT / FILE NO. 23-00434
DRAWING NO. L1.0
DATE DRAWN 12/12/24

V:\PROJECTS\2023\23-00434 - SUN CREDIT UNION\DRAWINGS\23-00434_TD.DWG by MGRINBANK 2/12/2025 4:38:39 PM

STIRLING ROAD (STATE ROAD NO. 848)
(SW 60TH STREET)

NW 92ND AVENUE

EXIST. FIRE HYDRANT

PROP. FIRE HYDRANT

PROP. BUILDING
3,212 SF
F.F.E.=7.00'

FIRE APPARATUS
TURNING RADII (TYP.)

DO NOT ENTER

DRIVE THRU LANES

ATM LEFT LANE

DRIVE THRU LANES

BYPASS LANE

PROP. FIRE HYDRANT

PROP. FIRE HYDRANT

DRAINAGE, FLOWAGE AND STORAGE EASEMENT INSTRUMENT #116945779

E-ONE HP95 Mid Mount

GRAPHIC SCALE
0 10 20 40
(IN FEET)
1 INCH = 20 FEET

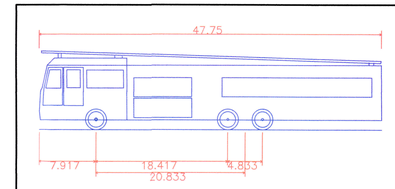

E-ONE HP95 Mid Mount	
Overall Length	47.750ft
Overall Width	8.333ft
Overall Body Height	11.000ft
Min Body Ground Clearance	1.393ft
Track Width	8.333ft
Lock-to-lock time	6.00s
Max Wheel Angle	45.00°

VEHICLE LEGEND:

WHEEL PATH

CHASSIS OVERHANG

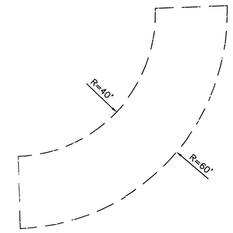

FIRE APPARATUS
TURNING RADII
NTS

811 SAFETY IS IN YOUR HANDS. EVERY DIG. EVERY TIME.

JOAQUIN A. MOJICA LICENSE No. 60488 STATE OF FLORIDA PROFESSIONAL ENGINEER

APPROVED : JOAQUIN A. MOJICA, P.E.
F.A. REGISTRATION NO. 60488 DATE : 10/24/2025

NO.	DATE	REVISIONS
1	7/22/24	REV. PER DRC COMMENTS
2	5/10/24	REVIEW SET

SUN CREDIT UNION

COOPER CITY, FLORIDA
FOR: SUN CREDIT UNION

EMERGENCY VEHICLE CIRCULATION ANALYSIS

MILLER LEGG
South Florida Office: 13680 NW 5th Street, Suite 200
Sunrise, Florida 33325
954-436-7000
www.millerlegg.com

CERTIFICATE OF AUTHORIZATION: LB6680

DES.	DRWN.	CHK.

PROJECT / FILE NO. 23-00434
DRAWING NO. C7.0
DATE DRAWN: 7/19/24

V:\PROJECTS\2023\23-00434 - SUN CREDIT UNION\DRAWINGS\23-00434_EVA.DWG by MSRINBANK 8/27/2024 11:10:28 AM

GRAPHIC SCALE
0 10 20 40
(IN FEET)
1 INCH = 20 FEET

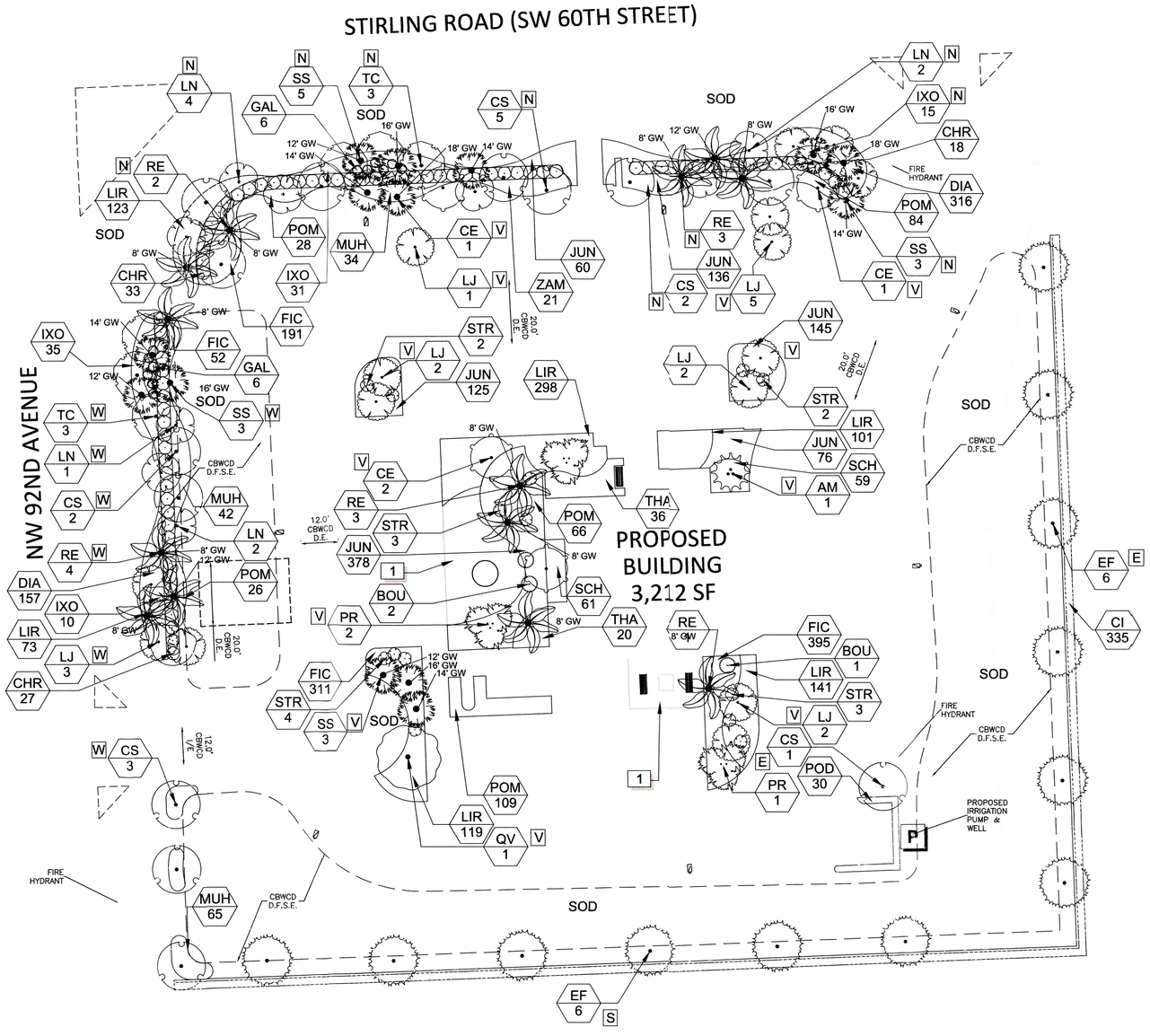

PLANT SCHEDULE		
SYMBOL	CODE	BOTANICAL / COMMON NAME
TREES		
	CE	Conocarpus erectus / Buttonwood
	CS	Conocarpus erectus f. sericeus / Silver Buttonwood
	EF	Eugenia foetida / Spanish Stopper
	LN	Lagerstroemia indica x fauriei 'Natchez' / Natchez Crape Myrtle
	LJ	Ligustrum japonicum / Japanese Privet
	QV	Quercus virginiana / Live Oak
	TC	Tabebuia chrysotricha / Golden Trumpet Tree
LARGE PALMS		
	RE	Roystonea elata / Florida Royal Palm
	SS	Sabal palmetto / Cabbage Palmetto
SMALL PALMS		
	AM	Adonidia merrillii / Manila Palm
	PR	Phoenix roebelenii / Pygmy Date Palm
SHRUBS		
	BOU	Bougainvillea glabra / Bougainvillea
	CHR	Chrysobalanus icaco / Coco Plum
	GAL	Galphimia gracilis / Rain of Gold
	STR	Strelitzia reginae / Bird Of Paradise
SHRUB AREAS		
	CI	Chrysobalanus icaco / Coco Plum
	DIA	Dianella tasmanica 'Variegata' / Variegated Flax Lily
	FIC	Ficus microcarpa 'Green Island' / Green Island Ficus
	IXO	Ixora coccinea / Ixora
	JUN	Juniperus chinensis 'Parsonii' / Parsoni Juniper
	LIR	Liriope muscari 'Emerald Goddess' / Emerald Goddess Lilyturf
	MUH	Muhlenbergia capillaris / Pink Muhly Grass
	POD	Podocarpus macrophyllus / Podocarpus
	POM	Podocarpus macrophyllus 'Pringles' / Pringles Dwarf Podocarpus
	SCH	Schefflera arboricola 'Variegata' / Dwarf Variegated Schefflera
	THA	Thaumatophyllum xanadu / Xanadu Philodendron
	ZAM	Zamia pumila / Coontie Cycad
GROUND COVERS		
	SOD	Stenotaphrum secundatum / St. Augustine Grass

REFERENCE_NOTES_SCHEDULE		
CODE	DESCRIPTION	QTY
1	Shell Rock, 3" Depth	3

REQUIRED TREE LEGEND

- N North R.O.W. Buffer Tree Requirement
- S South R.O.W. Buffer Tree Requirement
- W West R.O.W. Buffer Tree Requirement
- E East R.O.W. Buffer Tree Requirement
- V Internal Vehicular use area Required Trees

CBWCD NOTE:
THE LIMITS OF ANY EASEMENT TO BE DEDICATED TO THE DISTRICT SHALL BE STAKED PRIOR TO INSTALLING TREES TO BE LOCATED WITHIN THREE (3) FEET OF A DISTRICT EASEMENT. THE STAKES SHALL REMAIN IN PLACE UNTIL THE SITE OR LANDSCAPE CONTRACTOR VERIFIES THE INTENDED PLANT LOCATION DOES NOT ENCROACH INTO A DISTRICT EASEMENT.

NO.	DATE	REVISIONS
6	1/31/25	REV. PER CBWCD COMMENTS
5	12/11/24	REV. PER CBWCD COMMENTS
4	7/22/24	REV. PER DRC COMMENTS
3	5/10/24	REVIEW SET

SUN CREDIT UNION

COOPER CITY, FLORIDA
FOR: SUN CREDIT UNION

MILLER LEGG
South Florida Office: 13680 NW 5th Street, Suite 200
Sunrise, Florida 33325
954.451.7845
www.millerlegg.com

LANDSCAPE PLAN

CERTIFICATE OF AUTHORIZATION: LB6680

MB	JRO	BS
DES.	DWN.	CHK.

PROJECT / FILE NO.: 23-00434
DRAWING NO.: L2.0
DATE DRAWN: 1/31/25

LANDSCAPE ARCHITECT BRIAN R. SHORE STATE OF FLORIDA LA6666770

APPROVED : BRIAN R. SHORE, RLA
FLA. REGISTRATION NO. LA6666770 DATE : 10/24/2025

V:\PROJECTS\2023\23-00434 - SUN CREDIT UNION\DRAWINGS\23-00434_LD.DWG by MGRINBANK 10/24/2025 7:00:11 AM