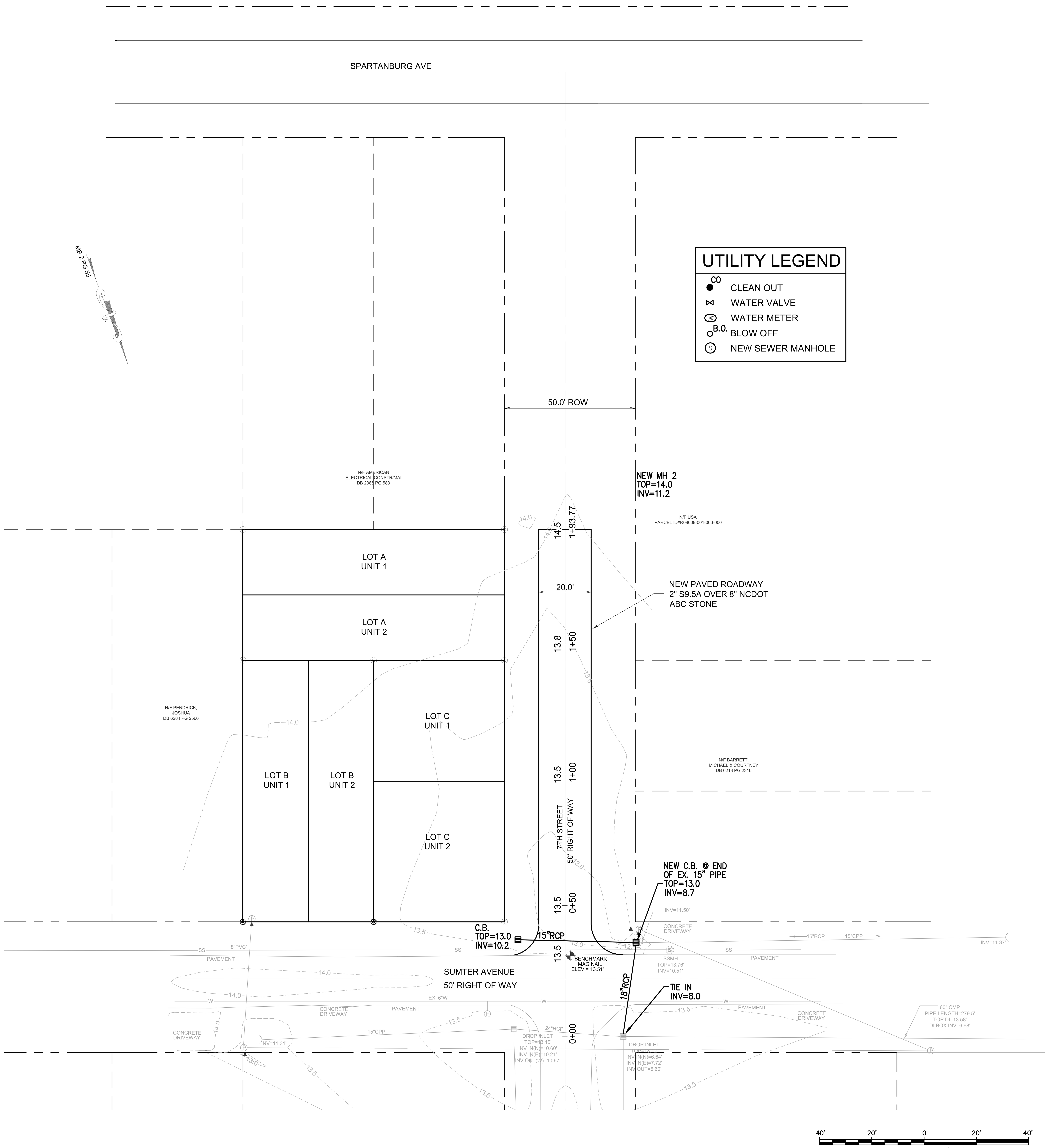

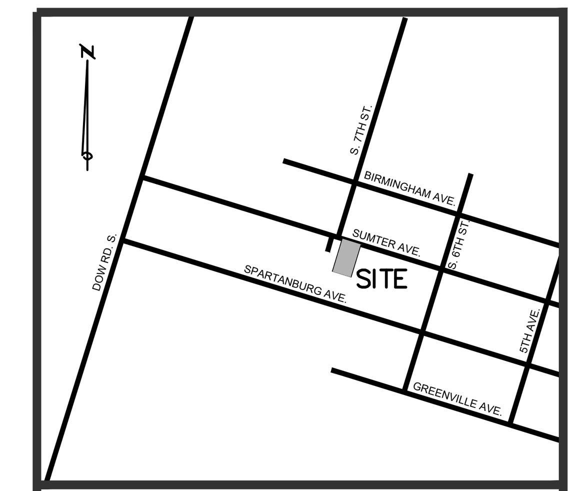

LOCATION MAP
NOT TO SCALE

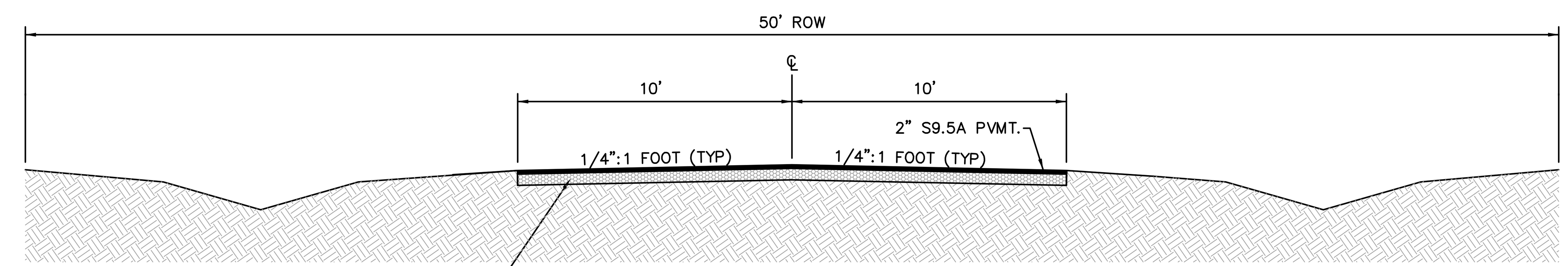

TYPICAL ROADWAY SECTION
NOT TO SCALE

REV NO.	DESCRIPTION	DATE

REVISIONS

7TH STREET EXTENSION

CAROLINA BEACH | NEW HANOVER | NORTH CAROLINA

PRELIMINARY

SITE PLAN, GRADING & EROSION CONTROL PLAN

RIGHT ANGLE ENGINEERING, P.C.
212 PRINCESS STREET
WILMINGTON, NC 28401
(910) 251-8544 FAX (910) 251-2208 FIRM: C-0829

DATE: 10/22/20
Scale: 1"=20'
Drawn: NNC
Checked: WSL
Project No: HM0220
Sheet No: C2