Exhibit 23 APPEAL24-1001

IRRIGATION CONSTRUCTION NOTES:
1. THE CONTRACTOR SHALL INSPECT THE SITE AND VERIFY CONDITIONS AND DIMENSIONS PRIOR TO CONSTRUCTION.
2. IRRIGATION PLANS ARE SCHEMATIC REPRESENTATIONS ONLY. PLACE LINES IN A COMMON TRENCH WHENEVER POSSIBLE. FIELD ADJUST LINES TO AVOID CONFLICT WITH UTILITIES.
3. IRRIGATION IS COORDINATED WITH THE PLANTING PLAN AND SITE IMPROVEMENTS AND IS DESIGNED WITH TRIANGULAR SPACING GIVING HEAD TO HEAD COVERAGE. COORDINATE IRRIGATION HEAD LAYOUT WITH NEW PLANT MATERIALS. LOCATE SPRAY HEADS 30" FROM BASE OF TREE. DO NOT ALTER HEAD LOCATION, PIPE LAYOUT, OR VALVE LOCATION WITHOUT WRITTEN APPROVAL FROM THE CITY ENGINEER. NOTIFY THE CITY ENGINEER IF DISCREPANCIES OCCUR BETWEEN THE PLANS AND FIELD CONDITIONS.
4. ALL COMPONENTS OF IRRIGATION SYSTEM SHALL BE INSTALLED AND PROPERLY ADJUSTED TO PROVIDE ADEQUATE COVERAGE AND MINIMIZATION OF OVER SPRAY ONTO WALKS, BUILDINGS, PARKING AREAS, ETC.
5. ALL PIPE SIZES INDICATED ARE MINIMUMS. CONTRACTOR MAY NOT DECREASE PIPE SIZE. LARGER PIPE SIZES MAY BE USED AT NO ADDITIONAL COST TO OWNER. IRRIGATION LATERALS ARE SIZED BEGINNING AT THE AUTOMATIC VALVE AND CONTINUING IN DIRECTION OF FLOW. REDUCTIONS IN PIPE SIZE ARE LABELED BEGINNING DOWNSTREAM OF NEAREST FITTING. ALL LATERALS NOT SIZED ARE MINIMUM 3/4".
6. INSTALL ALL IRRIGATION PIPE AND CONTROL WIRES IN MINIMUM 4" PVC SLEEVE BELOW ALL PAVED SURFACES UNLESS OTHERWISE INDICATED ON THE PLANS. INSTALL SLEEVES PRIOR TO PLACEMENT OF PAVEMENTS AND PAVEMENT SUB-BASE. SEE PIPE SLEEVING DETAIL FOR FURTHER REQUIREMENTS.
7. COORDINATE IRRIGATION POINTS OF CONNECTION AND LOCATION OF AUTOMATIC CONTROL VALVES WITH THE ENGINEER. COORDINATE ALL WORK WITH OTHER TRADES, I.E. ELECTRICAL, MASONRY, ETC.
8. CONTRACTOR TO PROGRAM AUTOMATIC CONTROLLER TO ALLOW FOR THE EQUIVALENT OF 1" OF WATER PER WEEK.
9. ALL PIPES SHALL BE TRENCHED. PROVIDE POSITIVE DRAINAGE OF MAINLINE. PLACE MANUAL DRAIN AT LOW POINTS IN MAINLINE. IDENTIFY LOCATIONS ON AS-BUILTS.
10. USE 45° ELBOWS INSTEAD OF 90° ELBOWS ON ALL MAINLINES 2-1/2" AND LARGER. INSTALL CONCRETE THRUST BLOCKS AT ALL MAINLINE CHANGES IN DIRECTION. POUR MINIMUM OF 1 CUBIC FOOT OF CONCRETE ON UNDISTURBED SOIL. WRAP PIPE IN PLASTIC PRIOR TO COVERING WITH CONCRETE.
11. CONTRACTOR TO INSTALL CONTROLLER, CPU ELECTRICAL, PHONE AND ACCESSORIES AS REQUIRED. CONTRACTOR TO FURNISH CONTROL WIRES FROM VALVES TO CONTROLLER. CONTRACTOR SHALL BE RESPONSIBLE FOR COORDINATING 110 VOLT SERVICE FROM BUILDING TO EXISTING JUNCTION BOX IN CONTROLLER HOUSING AND CONNECT CONTROLLER SERVICE.
12. ALL TONING WIRE, WHERE REQUIRED, SHALL BE 14 GAUGE COPPER CLAD STEEL WITH HDPE DIRECT BURY INSULATION. SEAL SPLICE CONNECTIONS WITH 3M DBY OR KING GEL CAPS.
13. ALL DIRECT BURY CONTROL WIRING AND CABLING SHALL HAVE SPLICE CONNECTIONS SEALED WITH 3M DBY OR RAIN BIRD DB SERIES WIRE CONNECTORS IN A SPLICE BOX.
14. SEE SPECIFICATIONS FOR FURTHER REQUIREMENTS.
15. WATER METER SHALL BE INSTALLED BY THE CITY. CONTRACTOR RESPONSIBLE FOR CONNECTIONS DOWNSTREAM OF WATER METER.
16. CONTRACTOR TO VERIFY WATER PRESSURE TO ENSURE THAT PRESSURE MATCHES THE SYSTEM DESIGN PRESSURE.
17. WHERE REQUIRED, CONTRACTOR SHALL PROVIDE AN APPROPRIATELY SIZED POLYMER IRRIGATION VALVE BOX LARGE ENOUGH TO CONTAIN THE SPECIFIED COMPONENTS. VALVE BOXES SHALL BE RAINBIRD VB SERIES, CARSON, OR APPROVED EQUIVALENT.

City of Camas WASHINGTON — LANDSCAPE DETAIL — IRRIGATION CONSTRUCTION NOTES — NOT TO SCALE — DETAIL NO. IR1 — DETAIL APPROVED BY 6-19-19 DATE — REVISION: 2 — DATE: 6/19/2019 — ST-IRRIGATION.DWG

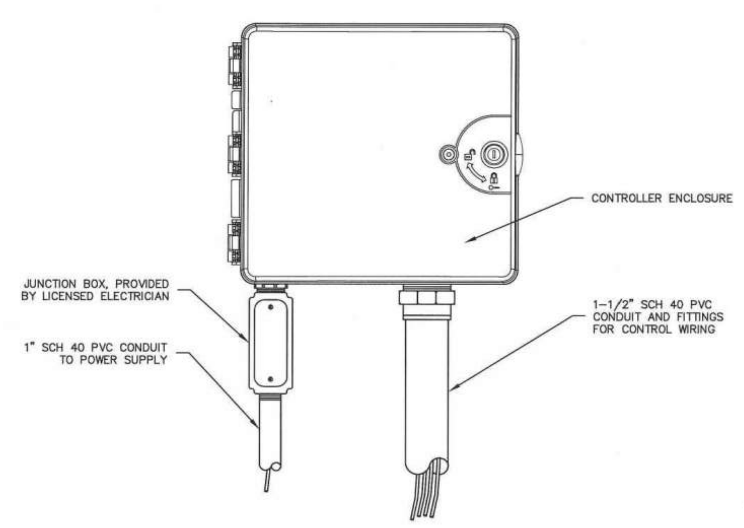

NOTES:
1. IRRIGATION CONTROLLER SHALL BE A RAINBIRD ESP-LXME SERIES PROGRAMMABLE CONTROLLER, OR APPROVED EQUAL.
2. INTERIOR INSTALLATIONS DO NOT REQUIRE AN ENCLOSURE WHEN MOUNTED WITHIN THE UTILITY ROOM OF A RESTROOM OR OTHER FACILITY WHERE THE PUBLIC HAS NO ACCESS.
3. FOR EXTERIOR WALL MOUNTED APPLICATIONS SEE DETAIL IR3.

City of Camas WASHINGTON — LANDSCAPE DETAIL — IRRIGATION CONTROLLER – INDOOR MOUNT — NOT TO SCALE — DETAIL NO. IR2 — DETAIL APPROVED BY 6-19-19 DATE — REVISION: 2 — DATE: 6/19/2019 — ST-IRRIGATION.DWG

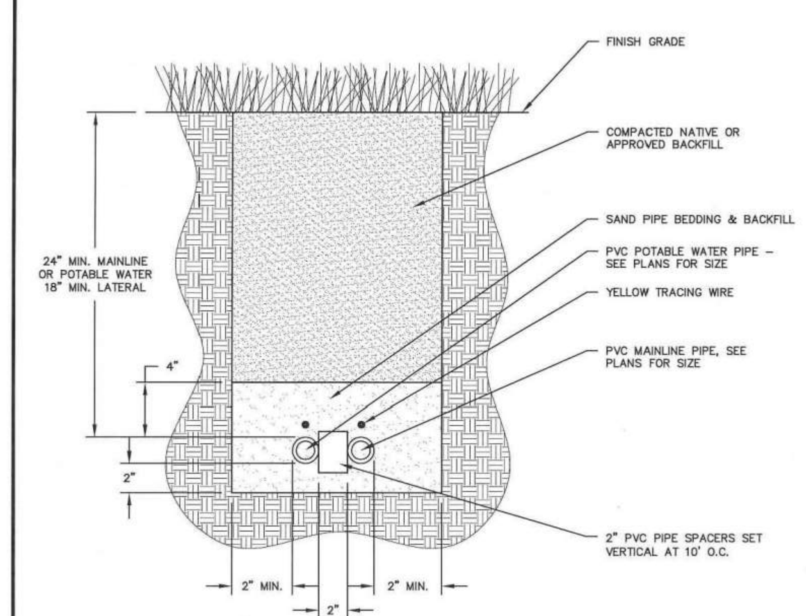

NOTES:
1. ALL TONING WIRE SHALL BE 14 GAUGE YELLOW HDPE INSULATED COPPER CLAD STEEL. SEAL SPLICE CONNECTIONS WITH 3M DBY OR KING GEL CAPS.
2. PROVIDE A 48 INCH COIL OF TONING WIRE IN EACH VALVE BOX.

City of Camas WASHINGTON — LANDSCAPE DETAIL — IRRIGATION TRENCH — NOT TO SCALE — DETAIL NO. IR4 — DETAIL APPROVED BY 6-19-19 DATE — REVISION: 2 — DATE: 6/19/2019 — ST-IRRIGATION.DWG

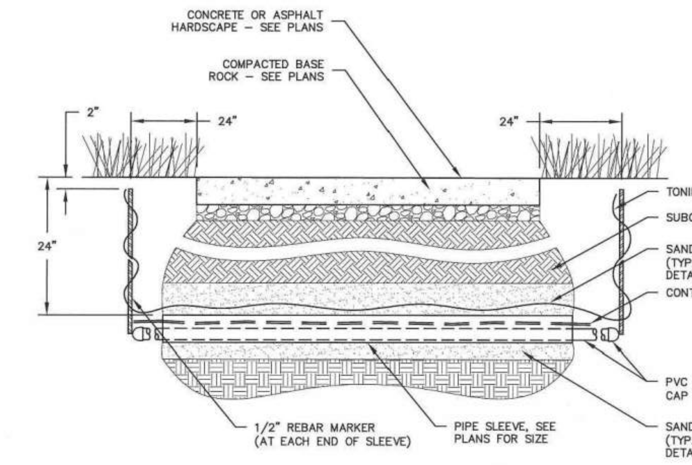

NOTES:
1. CONTRACTOR SHALL PROVIDE AN APPROPRIATELY SIZED IRRIGATION POLYMER VALVE BOX LARGE ENOUGH TO CONTAIN THE SPECIFIED COMPONENTS. VALVE BOXES SHALL BE RAINBIRD VB SERIES, CARSON, OR APPROVED EQUIVALENT.
2. PROVIDE TONING WIRE ALONG ALL PIPE SLEEVING.
3. ALL TONING WIRE SHALL BE 14 GAUGE YELLOW HDPE INSULATED COPPER CLAD STEEL. SEAL SPLICE CONNECTIONS WITH 3M DBY OR KING GEL CAPS.

City of Camas WASHINGTON — LANDSCAPE DETAIL — IRRIGATION PIPE SLEEVE — NOT TO SCALE — DETAIL NO. IR5 — DETAIL APPROVED BY 6-19-19 DATE — REVISION: 2 — DATE: 6/19/2019 — ST-IRRIGATION.DWG

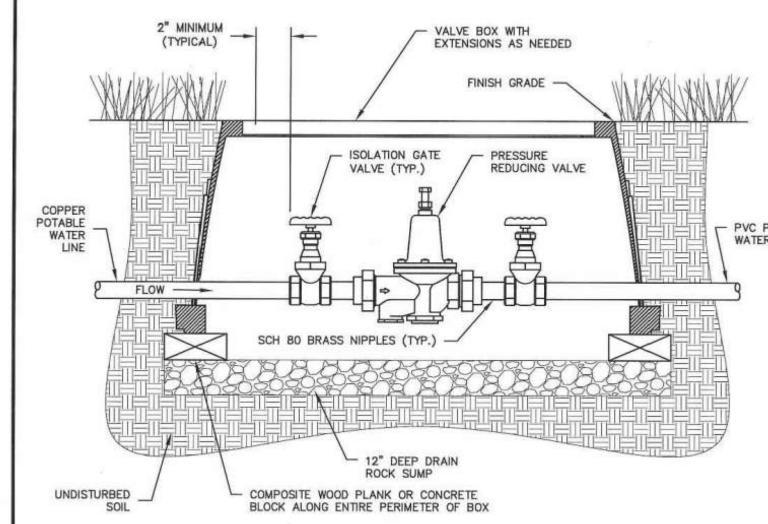

NOTES:
1. CONTRACTOR SHALL PROVIDE AN APPROPRIATELY SIZED POLYMER IRRIGATION VALVE BOX LARGE ENOUGH TO CONTAIN THE SPECIFIED COMPONENTS. VALVE BOXES SHALL BE RAINBIRD VB SERIES, CARSON, OR APPROVED EQUIVALENT.
2. ALL THREADED FITTINGS SHALL BE WRAPPED WITH TEFLON TAPE.
3. PRESSURE REDUCING VALVE SHALL BE A WATTS M/N 25AUB-Z3 WITH DOUBLE UNION END CONNECTIONS, OR APPROVED EQUAL.
4. FOR APPLICATIONS WHERE DRINKING FOUNTAINS ARE SUPPLIED, ALL COMPONENTS SHALL BE SUITABLE FOR POTABLE WATER.

City of Camas WASHINGTON — LANDSCAPE DETAIL — IRRIGATION PRESSURE REGULATOR — NOT TO SCALE — DETAIL NO. IR6 — DETAIL APPROVED BY 6-19-19 DATE — REVISION: 2 — DATE: 6/19/2019 — ST-IRRIGATION.DWG

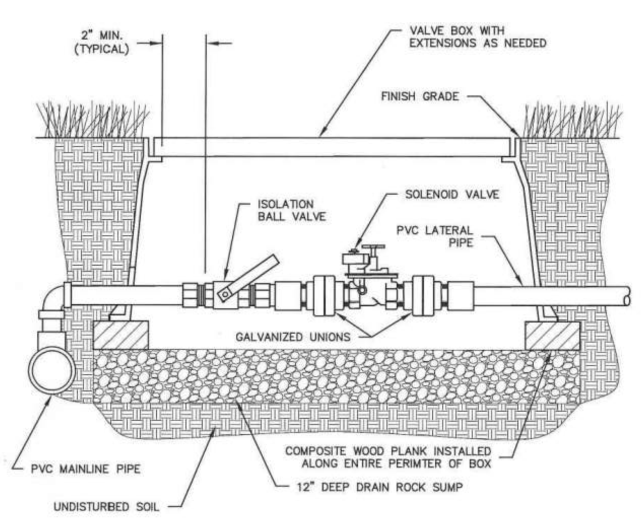

NOTES:
1. CONTRACTOR SHALL PROVIDE AN APPROPRIATELY SIZED POLYMER IRRIGATION VALVE BOX LARGE ENOUGH TO CONTAIN THE SPECIFIED COMPONENTS. VALVE BOXES SHALL BE RAINBIRD VB SERIES, CARSON, OR APPROVED EQUIVALENT.
2. ALL THREADED FITTINGS SHALL BE WRAPPED WITH TEFLON TAPE.

City of Camas WASHINGTON — LANDSCAPE DETAIL — IRRIGATION SOLENOID VALVE — NOT TO SCALE — DETAIL NO. IR7 — DETAIL APPROVED BY 6-19-19 DATE — REVISION: 2 — DATE: 6/19/2019 — ST-IRRIGATION.DWG

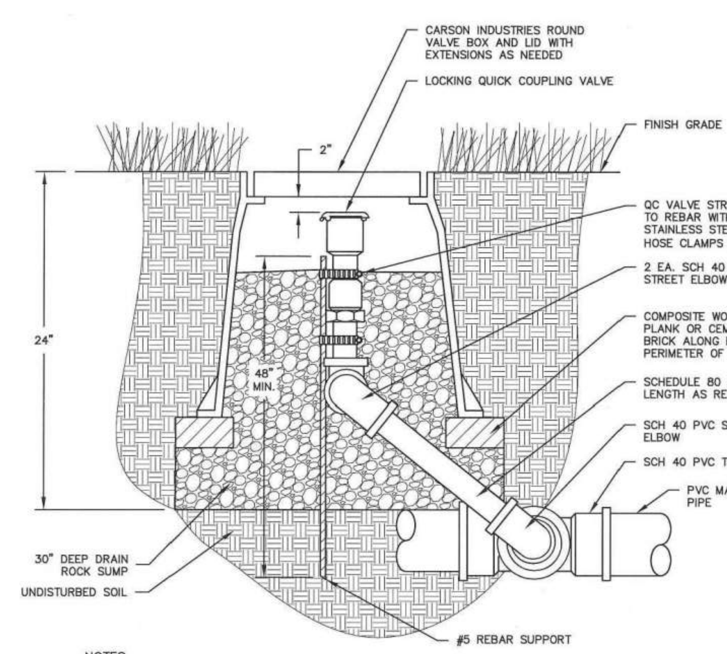

NOTES:
1. CONTRACTOR SHALL PROVIDE AN APPROPRIATELY SIZED POLYMER IRRIGATION VALVE BOX LARGE ENOUGH TO CONTAIN THE SPECIFIED COMPONENTS. VALVE BOXES SHALL BE RAINBIRD VB SERIES, CARSON, OR APPROVED EQUIVALENT.
2. ALL THREADED FITTINGS SHALL BE WRAPPED WITH TEFLON TAPE.
3. SWING JOINT SIZE SHALL BE SAME SIZE AS VALVE BOTTOM INLET.

City of Camas WASHINGTON — LANDSCAPE DETAIL — IRRIGATION QUICK COUPLING VALVE — NOT TO SCALE — DETAIL NO. IR9 — DETAIL APPROVED BY 6-19-19 DATE — REVISION: 2 — DATE: 6/19/2019 — ST-IRRIGATION.DWG

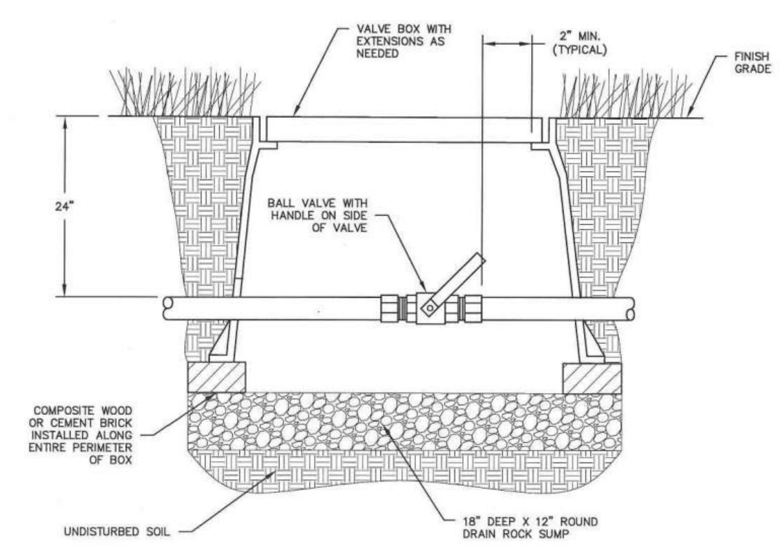

NOTES:
1. CONTRACTOR SHALL PROVIDE AN APPROPRIATELY SIZED POLYMER IRRIGATION VALVE BOX LARGE ENOUGH TO CONTAIN THE SPECIFIED COMPONENTS. VALVE BOXES SHALL BE RAINBIRD VB SERIES, CARSON, OR APPROVED EQUIVALENT.
2. ALL THREADED FITTINGS SHALL BE WRAPPED WITH TEFLON TAPE.

City of Camas WASHINGTON — LANDSCAPE DETAIL — IRRIGATION ISOLATION BALL VALVE — NOT TO SCALE — DETAIL NO. IR10 — DETAIL APPROVED BY 6-19-19 DATE — REVISION: 2 — DATE: 6/19/2019 — ST-IRRIGATION.DWG

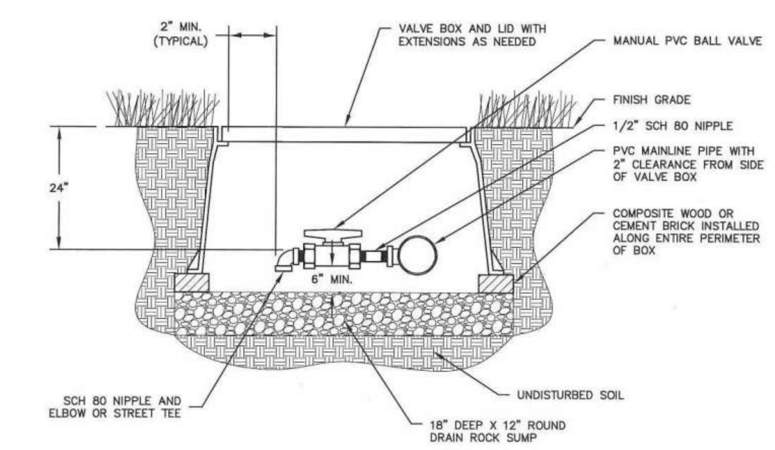

NOTES:
1. CONTRACTOR SHALL PROVIDE AN APPROPRIATELY SIZED POLYMER IRRIGATION VALVE BOX LARGE ENOUGH TO CONTAIN THE SPECIFIED COMPONENTS. VALVE BOXES SHALL BE RAINBIRD VB SERIES, CARSON, OR APPROVED EQUIVALENT.
2. ALL THREADED FITTINGS SHALL BE WRAPPED WITH TEFLON TAPE.
3. CONTRACTOR RESPONSIBLE FOR LOCATING DRAIN VALVE AT LOWEST POINT OF MAINLINE TO ENSURE POSITIVE DRAINAGE.
4. ALLOW FOR 1" CLEARANCE FROM HOLE IN BOX TO TOP OF PIPE.

City of Camas WASHINGTON — LANDSCAPE DETAIL — IRRIGATION MANUAL DRAIN VALVE — NOT TO SCALE — DETAIL NO. IR11 — DETAIL APPROVED BY 6-19-19 DATE — REVISION: 2 — DATE: 6/19/2019 — ST-IRRIGATION.DWG

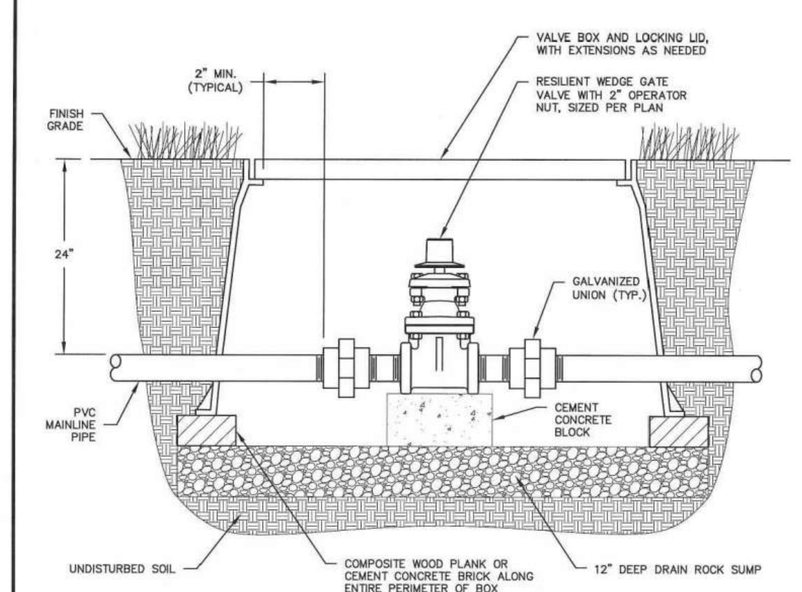

NOTES:
1. CONTRACTOR SHALL PROVIDE AN APPROPRIATELY SIZED POLYMER IRRIGATION VALVE BOX LARGE ENOUGH TO CONTAIN THE SPECIFIED COMPONENTS. VALVE BOXES SHALL BE RAINBIRD VB SERIES, CARSON, OR APPROVED EQUIVALENT.

City of Camas WASHINGTON — LANDSCAPE DETAIL — IRRIGATION MANUAL GATE VALVE — NOT TO SCALE — DETAIL NO. IR12 — DETAIL APPROVED BY 6-19-19 DATE — REVISION: 2 — DATE: 6/19/2019 — ST-IRRIGATION.DWG

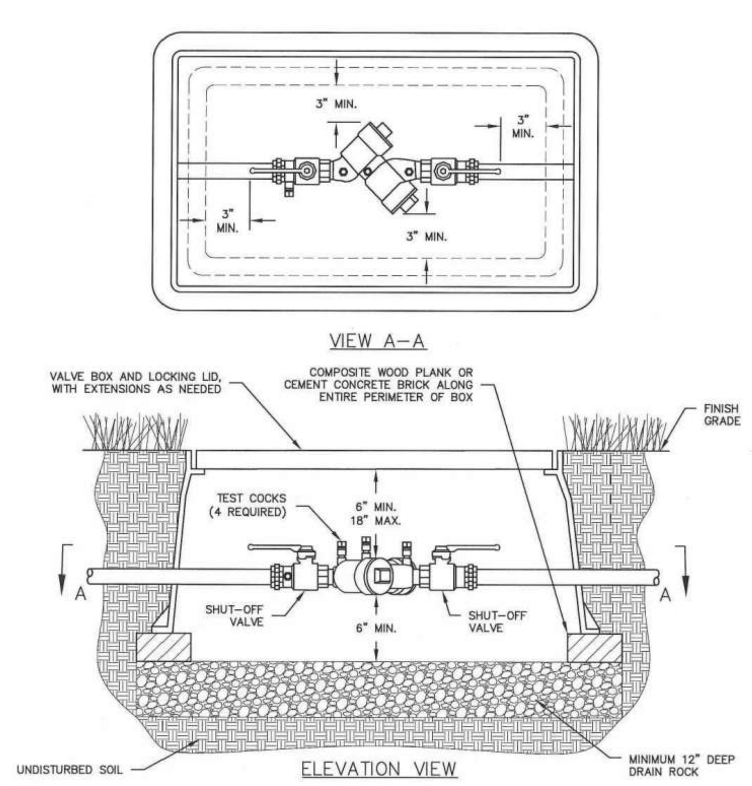

NOTES:
1. CONTRACTOR SHALL PROVIDE AN APPROPRIATELY SIZED POLYMER IRRIGATION VALVE BOX LARGE ENOUGH TO CONTAIN THE SPECIFIED COMPONENTS. VALVE BOXES SHALL BE RAINBIRD VB SERIES, CARSON, OR APPROVED EQUIVALENT.
2. APPROVED DOUBLE CHECK VALVE ASSEMBLY TO LAY HORIZONTAL WITH GROUND. TEST COCKS TO EITHER FACE OUTWARDS OR UPWARDS FROM ASSEMBLY.
3. DESIGNED FOR BACK SIPHONING AND BACK PRESSURE.
4. THOROUGHLY FLUSH LINES PRIOR TO INSTALLATION OF BACKFLOW PREVENTER.
5. THE DCVA MAY BE INSTALLED ABOVE OR BELOW THE GROUND PROVIDED ALL CLEARANCES ARE MET.
6. DO NOT INSTALL IN AN AREA SUBJECT TO FLOODING. MUST BE ACCESSIBLE AND PROTECTED FROM FREEZING CONDITIONS.
7. THE DOUBLE CHECK VALVE BACKFLOW PREVENTER ASSEMBLY SHALL BE ASSE LISTED 1015 APPROVED AND INCLUDE FULL PORT BALL VALVES WITH RESILIENT SEATS AND UNION CONNECTIONS.
8. A PLUMBING PERMIT IS REQUIRED. PLEASE CONTACT THE CITY OF CAMAS BUILDING DEPARTMENT.
9. MUST BE TESTED AFTER INSTALLATION BY A WASHINGTON STATE CERTIFIED BACKFLOW ASSEMBLY TESTER. TEST RESULTS SHALL BE SENT TO THE CITY OF CAMAS WATER DEPARTMENT.

City of Camas WASHINGTON — LANDSCAPE DETAIL — IRRIGATION DOUBLE CHECK VALVE ASSY. — NOT TO SCALE — DETAIL NO. IR13 — DETAIL APPROVED BY 6-19-19 DATE — REVISION: 2 — DATE: 6/19/2019 — ST-IRRIGATION.DWG

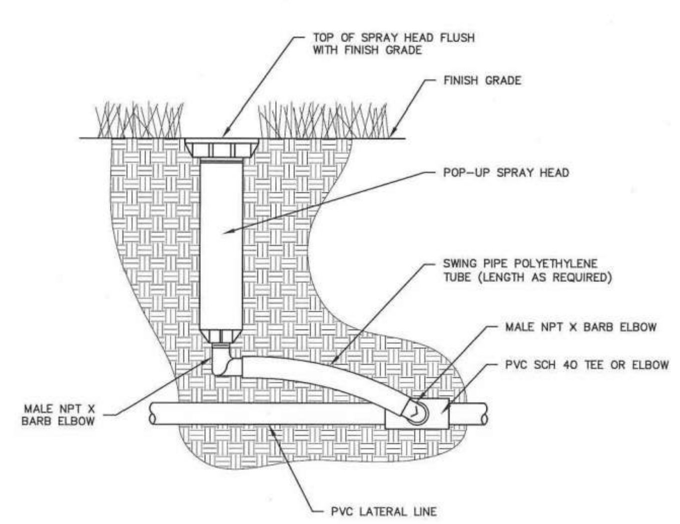

NOTES:
1. ALL THREADED FITTINGS SHALL BE WRAPPED WITH TEFLON TAPE.
2. SWING PIPE SHALL BE POLYEHTYLENE AND SIZE SHALL NOT BE LESS THAN HEAD INLET SIZE.
3. POP-UP SPRAY HEADS SHALL BE RAIN BIRD 1800 OR APPROVED EQUAL, SUBMITTAL REQUIRED.
4. WHEN SPRAY HEADS ARE LOCATED ALONG SIDEWALK OR CURBING THE HEADS SHALL BE MINIMUM 3" FROM HARDSCAPE AND PIPES MINIMUM 6" FROM HARDSCAPE.

City of Camas WASHINGTON — LANDSCAPE DETAIL — IRRIGATION POP-UP SPRAY HEAD — NOT TO SCALE — DETAIL NO. IR15 — DETAIL APPROVED BY 6-19-19 DATE — REVISION: 2 — DATE: 6/19/2019 — ST-IRRIGATION.DWG

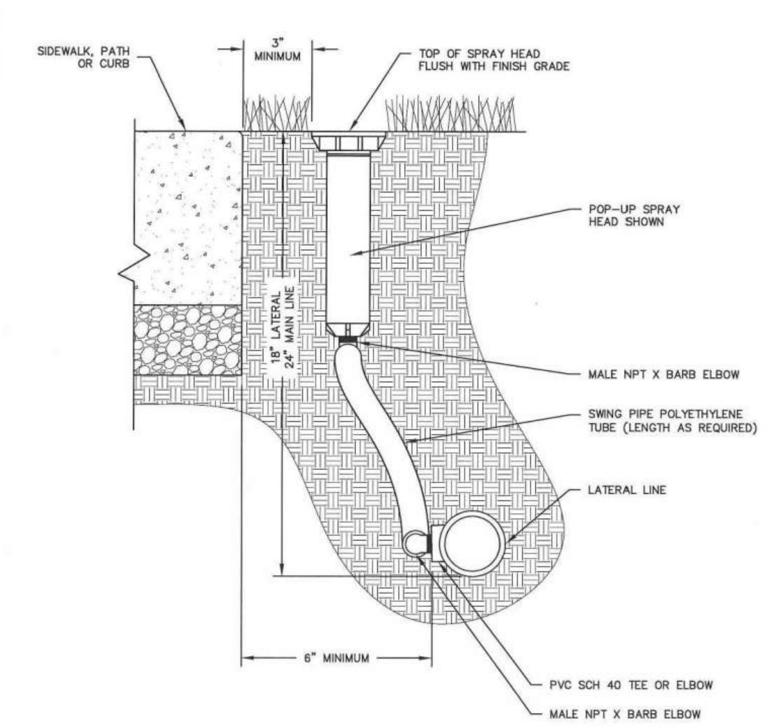

NOTES:
1. ALL THREADED FITTINGS SHALL BE WRAPPED WITH TEFLON TAPE.
2. SWING PIPE SHALL BE POLYEHTYLENE AND SIZE SHALL NOT BE LESS THAN HEAD INLET SIZE.
3. WHEN SPRAY HEADS ARE LOCATED ALONG SIDEWALK OR CURBING THE HEADS SHALL BE MINIMUM 3" FROM HARDSCAPE AND PIPES MINIMUM 6" FROM HARDSCAPE.

City of Camas WASHINGTON — LANDSCAPE DETAIL — IRRIGATION HEAD PLACEMENT ALONG HARDSCAPE — NOT TO SCALE — DETAIL NO. IR16 — DETAIL APPROVED BY 6-19-19 DATE — REVISION: 2 — DATE: 6/19/2019 — ST-IRRIGATION.DWG

Planning Solutions, Inc
Creating Solutions to Complex Issues
4400 NE 77th Avenue
Suite 275
VANCOUVER, WA 9866
VOICE: 360-750-9000 FAX: 360-713-61
www.planningsolutionsinc.co

STATE OF WASHINGTON — CHRISTOPHER A. BAUMANN — LICENSED LANDSCAPE ARCHITECT — NO. 635 — EXP. 02-20-2025

PRELIMINARY
NOT FOR CONSTRUCTION
SUBJECT TO APPROVAL

13TH STREET GAS STATIOIN

20101 NE 13th Street
Camas, Washington

DRAWN: Camas	CHECKED: CB
SCALE: AS SHOWN	DATE: 11.03.23
JOB #: 23-1837	
ISSUED FOR: PLR	

REVISIONS:
1
2
3
4
5
6

SHEET NAME:
PRELIMINARY IRRIGATION DETAILS

SHEET #: ID

SHEET 8 OF 8

© COPYRIGHT 2023, PLANNING SOLUTIONS, INC. NO PART OF THIS DRAWING MAY BE COPIED OR REPRODUCED WITHOUT WRITTEN PERMISSION OF PLANNING SOLUTIONS, INC.

DISCLAIMER AND LIMITATIONS: ANY WORK CONTAINED HEREIN INCLUDING BUT NOT LIMITED TO PLANS AND DOCUMENTS ARE INSTRUMENTS OF SERVICE INTENDED FOR USE SOLELY WITH RESPECT TO THIS PROJECT. ALL WORK SHALL BE CONSIDERED CONCEPTUAL AND SUBJECT TO CHANGE. THESE INSTRUMENTS OF SERVICE SHALL BE CONSIDERED A WORK IN PROGRESS WHERE UNKNOWN FACTORS EXIST AND JURISDICTIONAL REQUIREMENTS HAVE NOT BEEN VERIFIED. DUE TO THE HIGH DEGREE OF UNCERTAINTY ASSOCIATED WITH A CONCEPTUAL DESIGN, THESE INSTRUMENTS OF SERVICE SHALL NOT BE USED AS THE BASIS FOR A FINANCIAL EVALUATION OR CONSTRUCTION COST ESTIMATING. NO ASSURANCES ARE OFFERED OR IMPLIED AS TO THE OVERALL FEASIBILITY OF THE PROJECT. ALL WORK SHALL BE SUBJECT TO REVIEW AND FINAL APPROVAL BY ALL APPROPRIATE FEDERAL, STATE AND LOCAL AGENCIES AND SHALL CONTAIN THE PROFESSIONAL SEAL AND SIGNATURE OF ALL REQUIRED DESIGN PROFESSIONALS PRIOR TO ANY USE OF THESE DOCUMENTS. PLANNING SOLUTIONS, INC. AND ITS CONSULTANTS SHALL BE DEEMED THE AUTHORS AND OWNERS OF THEIR RESPECTIVE INSTRUMENTS OF SERVICE AND SHALL RETAIN ALL COMMON LAW, STATUTORY AND OTHER RESERVED RIGHTS, INCLUDING COPYRIGHTS.