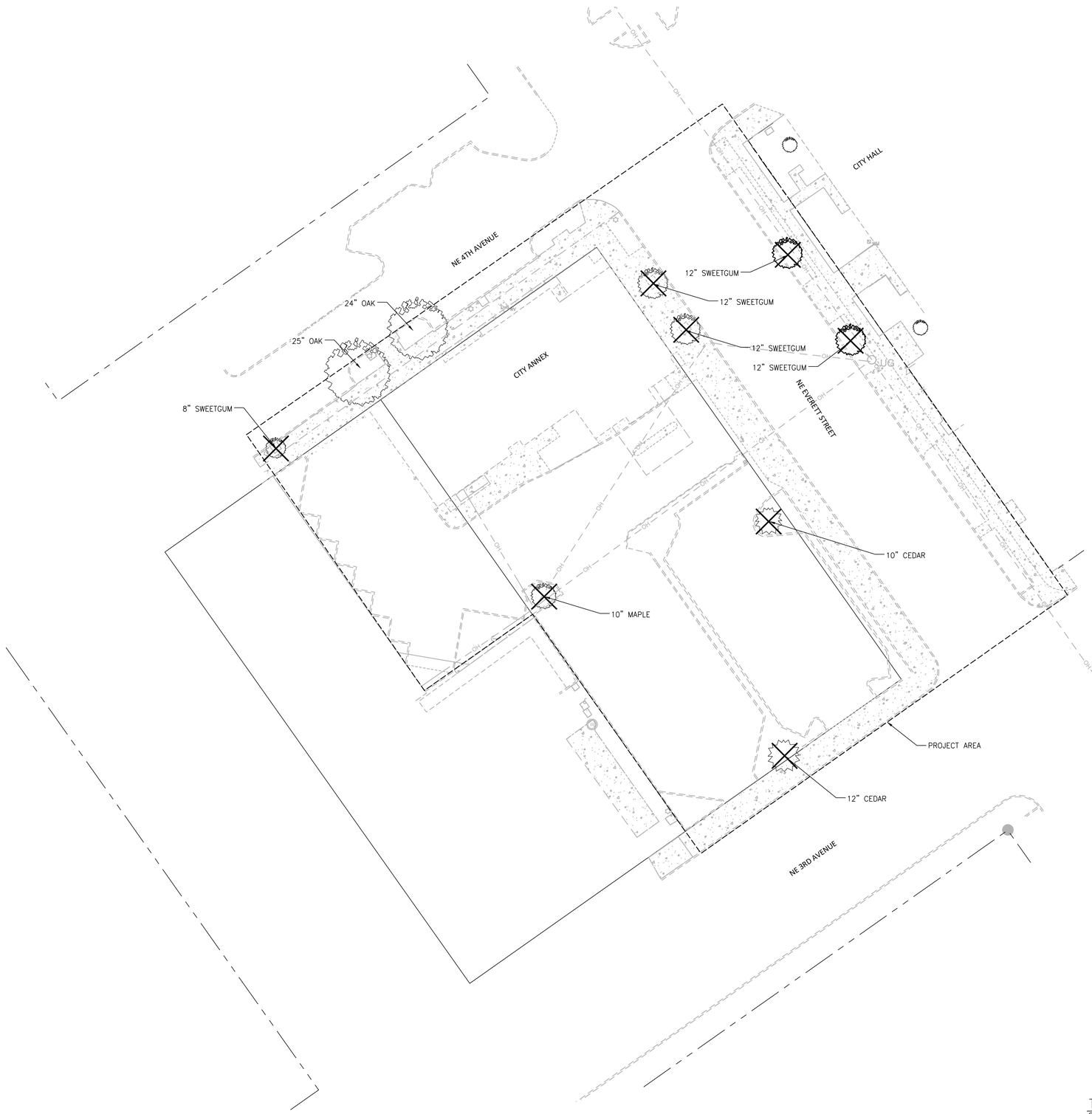

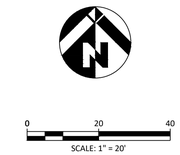

LEGEND

- EVERGREEN TREE TO BE REMOVED
- DECIDUOUS TREE TO BE REMOVED
- DECIDUOUS TREE TO REMAIN

NOTE:
PROTECTION SHALL BE LOCATED AT THE OUTER PERIMETER OF THE CRITICAL ROOT ZONE OR AS NOTED ON THE PLAN. INSTALL FENCE PER MANUFACTURER'S SPECIFICATION.

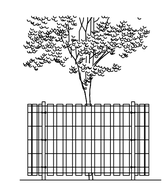

STANDARD CHAIN LINK OR ORANGE PVC FENCE SECURED TO WOODEN OR STEEL POSTS. 4'-0" HIGH, TYPICAL.

TREE PROTECTION TIME LINE AND NARRATIVE

TIME LINE: TREE PROTECTION AND EROSION CONTROL FENCING SHALL BE ESTABLISHED PRIOR TO EXCAVATION.

NARRATIVE: IT IS RECOMMENDED THAT WHERE TREE FENCING AND EROSION CONTROL FENCE ARE REQUIRED AT THE SAME LOCATION, THE EROSION CONTROL FENCE SHALL SERVE AS THE TREE PROTECTION FENCE. SEE TREE PROTECTION FENCING DETAIL. THE PROJECT MEETS THE REQUIRED 30 TREE UNITS / ACRE BY BOTH RETAINING EXISTING TREES AND PLANTING NEW TREES THROUGHOUT THE SITE. SEE DENSITY CALCULATIONS ON SHEET SP200.

SURVEY: TREE LOCATIONS AND SIZES SHOWN ON THE PLANS ARE PROVIDED BY MEASUREMENTS DURING FIELD VISITS BY MACKAY SPOSITO. CONTRACTOR TO VERIFY CONDITION PRIOR TO CONSTRUCTION AND ADJUST TREE PROTECTION MEASURES AS NEEDED. COORDINATE WITH MACKAY SPOSITO AND CITY PRIOR TO CONSTRUCTION.

TREE PROTECTION FENCE DETAIL
Scale N.T.S

MacKay Sposito
ENERGY PUBLIC WORKS LAND DEVELOPMENT
www.mackaysposito.com

STATE OF WASHINGTON
JUANITA B. ROGERS
NO. 1285 EXP. 08/03/2026
LICENSED LANDSCAPE ARCHITECT

PRELIMINARY

8/26/2025

CAMAS WASHOUGAL FIRE STATION 41
CAMAS, WA

TREE PLAN

REVISIONS:

JOB NO.:	18237.01
DATE:	AUGUST 2025
DESIGNED BY:	EC
DRAWN BY:	AR
CHECKED BY:	JR

PRELIMINARY

L1.0

FILE: w:\18237.01 camas washougal fire station 41\500 design\502 drawings\02 prelim\05 sheets\Landscape\L1.0 TREE PLAN.dwg PLOTSTYLE: Cover.stb

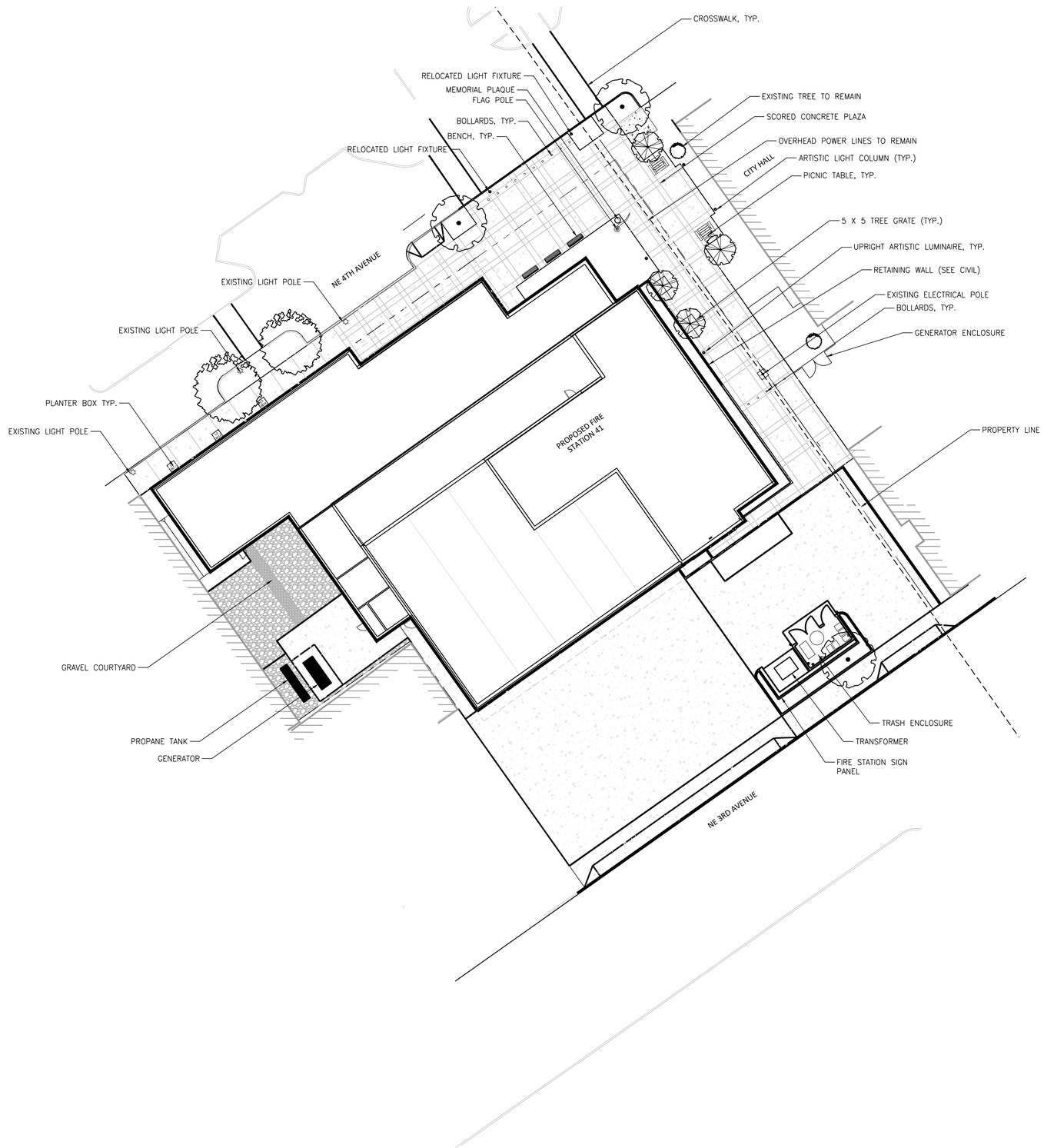

0 20 40
SCALE: 1" = 20'

PLANTING LEGEND

LANDSCAPING AREAS

PROPOSED TREES

Know what's below. Call before you dig.

MacKay Sposito
ENERGY PUBLIC WORKS LAND DEVELOPMENT
www.mackayposito.com

STATE OF WASHINGTON
JUANITA B. ROGERS
NO. 1285 EXP. 08/03/2026
LICENSED LANDSCAPE ARCHITECT

PRELIMINARY

8/26/2025

CAMAS WASHOUGAL FIRE STATION 41
CAMAS, WA

LANDSCAPE PLAN

REVISIONS:

JOB NO.:	18237.01
DATE:	AUGUST 2025
DESIGNED BY:	EC
DRAWN BY:	AR
CHECKED BY:	JR

PRELIMINARY

L2.0

FILE: w:\18237.01 camas washougal fire station 41\500 design\502 drawings\02 prelim\05 sheets\Landscape\L2.0 LANDSCAPE PLAN.dwg PLOTSTYLE: Cover.stb

NOTES:
1. ROOTBALL CROWN TO BE FLUSH WITH FINISH GRADE.
2. REMOVE PLANT FROM CONTAINER OR REMOVE TWINE AND BURLAP FROM TOP 1/2 OF ROOT BALL.

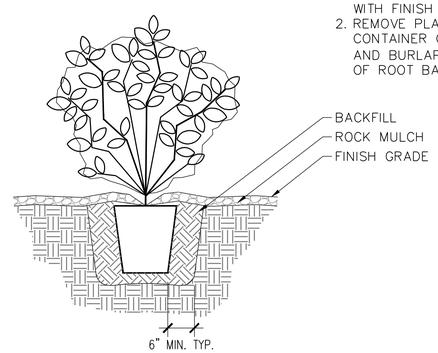

4 SHRUB/GROUNDCOVER PLANTING
Scale 3/4" = 1'-0

NOTE: INSTALL ROOT BARRIER PER MANUFACTURER'S RECOMMENDATIONS.

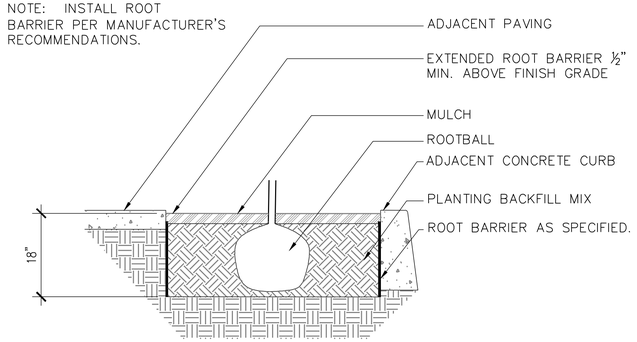

1 ROOT BARRIER
Scale 3/4" = 1'-0

NOTES:
1. IRRIGATION REQUIRED INSIDE TREE WELLS. SEE IRRIGATION DETAILS.
2. CONTRACTOR IS RESPONSIBLE FOR ENSURING THAT TREE REMAINS IN UPRIGHT STRAIGHT POSITION DURING ESTABLISHMENT PERIOD.

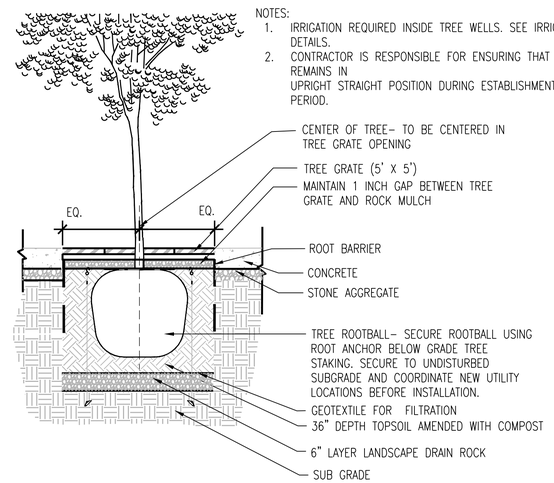

5 STREET TREE PLANTING IN TREE GRATES
Scale NTS

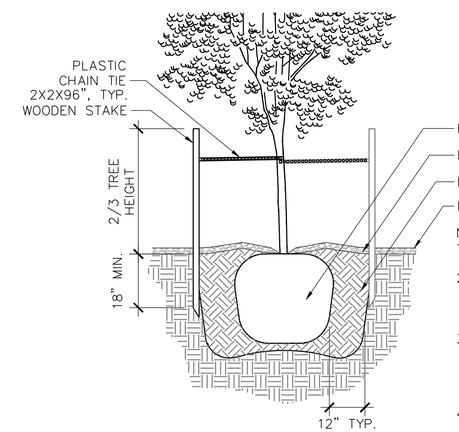

NOTES:
1. ROOTBALL CROWN TO BE FLUSH WITH FINISH GRADE.
2. REMOVE PLANT FROM CONTAINER OR REMOVE TWINE AND BURLAP FROM TOP 1/2 OF ROOT BALL.
3. WHEN PLANTING ON A SLOPE FINISH GRADE SHALL MATCH PREVIOUS GRADE EXCEPT IN AREAS OF COMPACTED FILL AND TOP OF ROOTBALL.
4. USE TWO WOODEN STAKES PER TREE, EQUALLY SPACED. REMOVE ALL SUPPORTS WITH IN 1 YEAR FROM PLANTING.

2 DECIDUOUS TREE PLANTING
Scale 1/2" = 1'-0

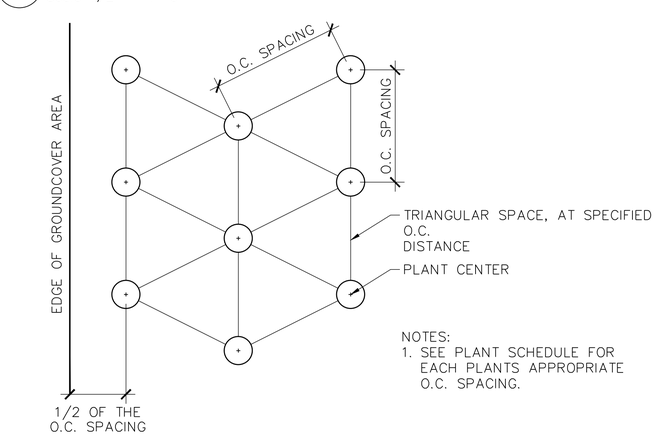

NOTES:
1. SEE PLANT SCHEDULE FOR EACH PLANTS APPROPRIATE O.C. SPACING.

3 GROUNDCOVER SPACING
Scale N.T.S

MacKay Sposito
ENERGY PUBLIC WORKS LAND DEVELOPMENT
www.mackaysposito.com

STATE OF WASHINGTON
JUANITA B. ROGERS
NO. 1295 EXP. 08/03/2026
LICENSED LANDSCAPE ARCHITECT
PRELIMINARY

8/26/2025

CAMAS WASHOUGAL FIRE STATION 41
CAMAS, WA

PLANTING DETAILS

REVISIONS:

JOB NO.:	18237.01
DATE:	AUGUST 2025
DESIGNED BY:	EC
DRAWN BY:	AR
CHECKED BY:	JR

PRELIMINARY

L3.0

FILE: w:\18237.01 camas washougal fire station 41\500 design\502 drawings\02 prelim\05 sheets\Landscape\L3.0 PLANTING DETAILS.dwg PLOTSTYLE: Cover.stb

6 CONCEPT MONUMENT SIGN
Scale NTS

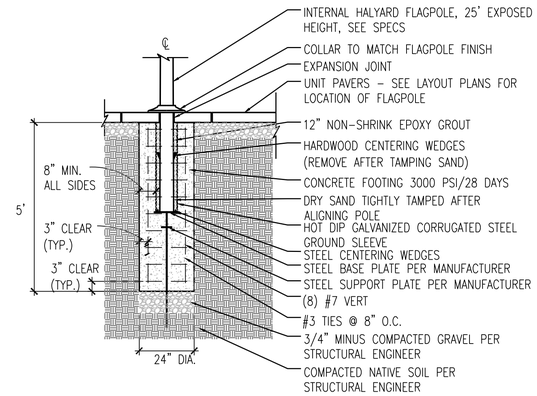

4 FLAGPOLE
Scale 1/2" = 1'-0

NOTE:
INSTALL THICKENED CONCRETE PAVING EDGE ADJACENT TO ALL PLANTING AREAS, SEATWALLS, AND CURBS.

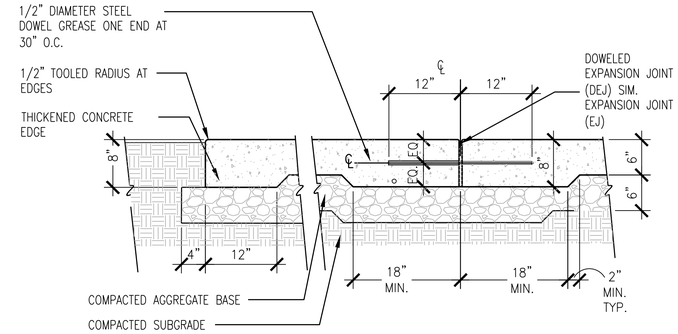

1 CONCRETE PAVING - VEHICULAR
Scale: NTS

NOTE:
INSTALL THICKENED CONCRETE PAVING EDGE ADJACENT TO ALL PLANTING AREAS, SEATWALLS, AND CURBS. DEEPEN THICKENED EDGE TO 12" WHERE INDICATED ON PLAN.

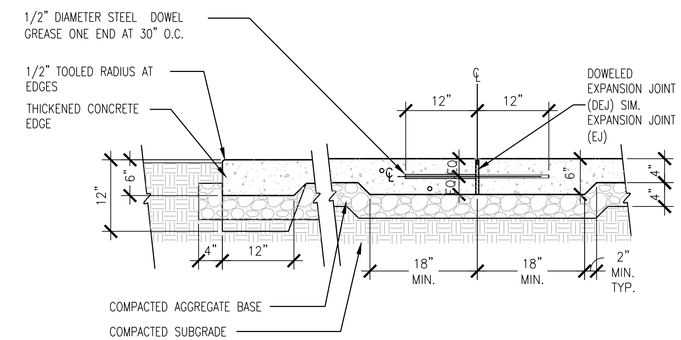

2 CONCRETE PAVING - PEDESTRIAN
Scale: NTS

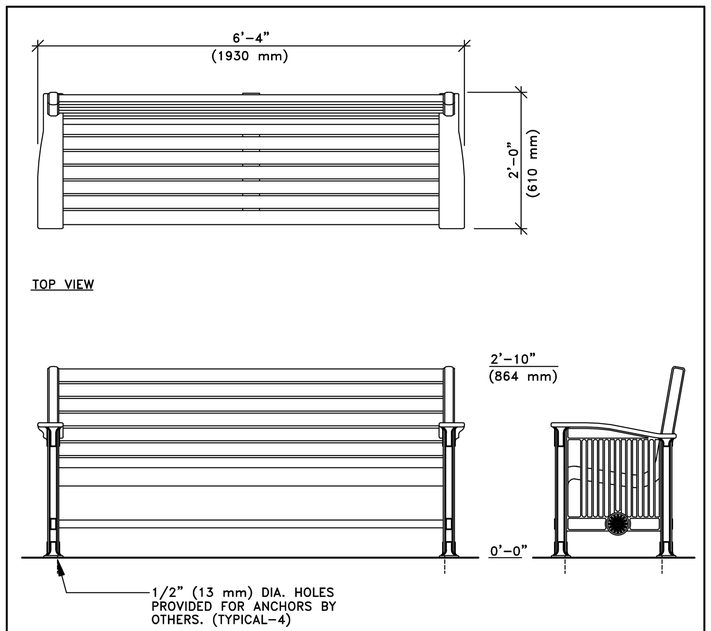

AVAILABLE IN 4', 5', 6' (SHOWN) AND 8' NOMINAL LENGTHS.
OTHER LENGTHS AVAILABLE UPON REQUEST.

This drawing reveals the copyrighted intellectual property of Columbia Cascade Company. Not for use by others without our express, written authorization.
Authorization for use is hereby granted to architects, landscape architects and similar design professionals solely for the purpose of specifying TimberForm products.

1 08-25-22	EDIT NOTE	WW/AC
Scale 3/4"=1'-0"	Drawn by: AT	07-04-10
	Ck'd by:	

COLUMBIA CASCADE COMPANY
Makers of TimberForm®, PipeLine®, RePlay® TimberForm®-2 and CycLoops® Products.
www.TimberForm.com
Phone: 503/223-1157 Email: HQ@TimberForm.com
This drawing reveals the copyrighted intellectual property of Columbia Cascade Company. Not for use by others without our express, written authorization.

Title: TIMBERFORM CRAFTSMEN MODEL NO. 2663-6 BENCH WITH ARMRESTS
Drawing No. W-2663-6
Sheet 1 of 1

5 BENCH DETAIL; COLUMBIA CASCADE COMPANY
Scale NTS

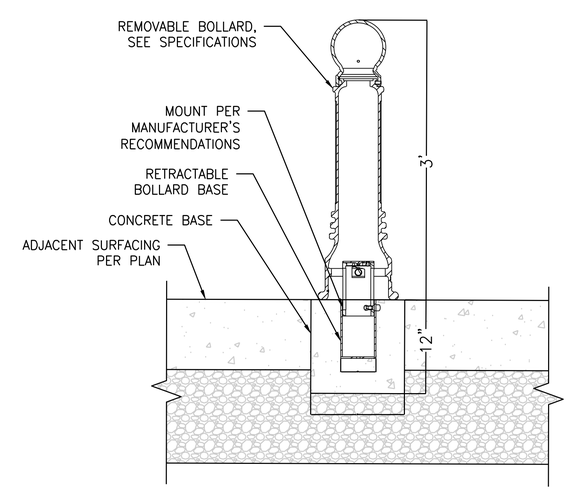

3 REMOVABLE BOLLARD
Scale NTS

MacKay Sposito
ENERGY PUBLIC WORKS LAND DEVELOPMENT
www.mackayposito.com

STATE OF WASHINGTON
JUANITA B. ROGERS
NO. 1295 EXP. 08/03/2026
LICENSED LANDSCAPE ARCHITECT

PRELIMINARY

8/26/2025

CAMAS WASHOUGAL FIRE STATION 41
CAMAS, WA

SITE DETAILS

REVISIONS:

JOB NO.:	18237.01
DATE:	AUGUST 2025
DESIGNED BY:	EC
DRAWN BY:	AR
CHECKED BY:	JR

PRELIMINARY

L4.0

FILE: w:\18237.01 camas washougal fire station 41\500 design\502 drawings\02 prelim\05 sheets\Landscape\L4.0 LANDSCAPE DETAILS.dwg PLOTSTYLE: Cover.stb