Preliminary Plan Enclosures
VOLUME II

- Bristol Yarn Mill Preliminary Plan, 26 sheets, 12/2/2022
- Architectural Drawings, Brady Sullivan 9 sheets, 8/8/22

FUSS & O'NEILL

Bristol Yarn Mill Preliminary Plan

26 Sheets, 12/2/22

BRISTOL YARN MILL

THAMES STREET & HOPE STREET · BRISTOL · RHODE ISLAND

ASSESSOR'S PLAT 10 LOTS 41, 42, 43, 44, 49, 50, 60, 61, 62, 68, 71, 73, 74, 76

PRELIMINARY PLAN

DECEMBER 6, 2022

PREPARED FOR

BRADY SULLIVAN PROPERTIES
670 N. COMMERCIAL STREET
MANCHESTER, NH 03101
603.622.6223
WWW.BRADYSULLIVAN.COM

PREPARED BY

FUSS & O'NEILL
317 IRON HORSE WAY, SUITE 204
PROVIDENCE, RI 02908
401.861.3070
www.fando.com

CONSULTANTS

NOBIS GROUP
18 CHENELL DR
CONCORD, NH 03301
603.224.4182

SHEET INDEX

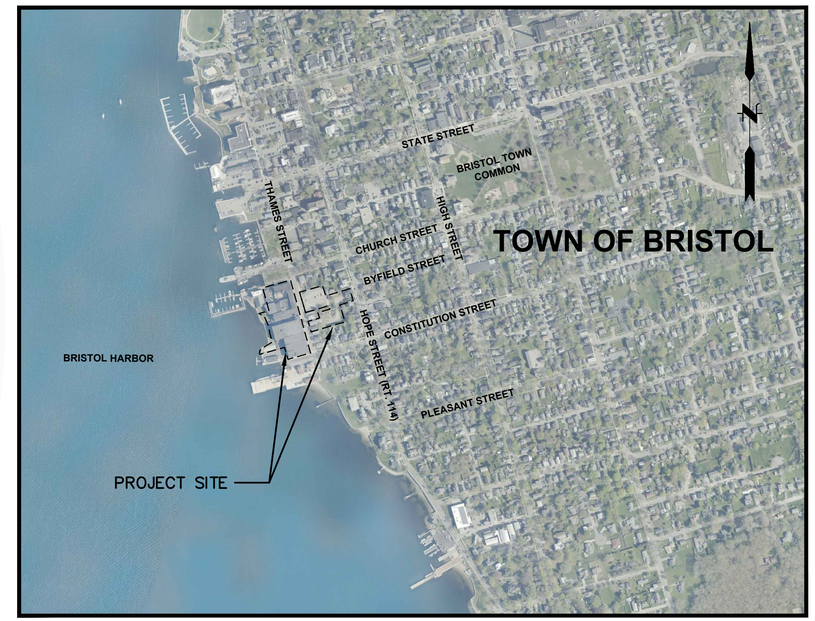

LOCATION MAP
SCALE: 1" = 500'

PLANNING BOARD APPROVAL

PLANNING BOARD CHAIR OR DESIGNEE DATE

SHAWN M. MARTIN
No. 7487
REGISTERED PROFESSIONAL ENGINEER (CIVIL)
12/6/22

PROJ. No.: 20061150.A22
DATE: NOVEMBER 29, 2022

GI-001

SHEET 1 OF 26

LEGEND

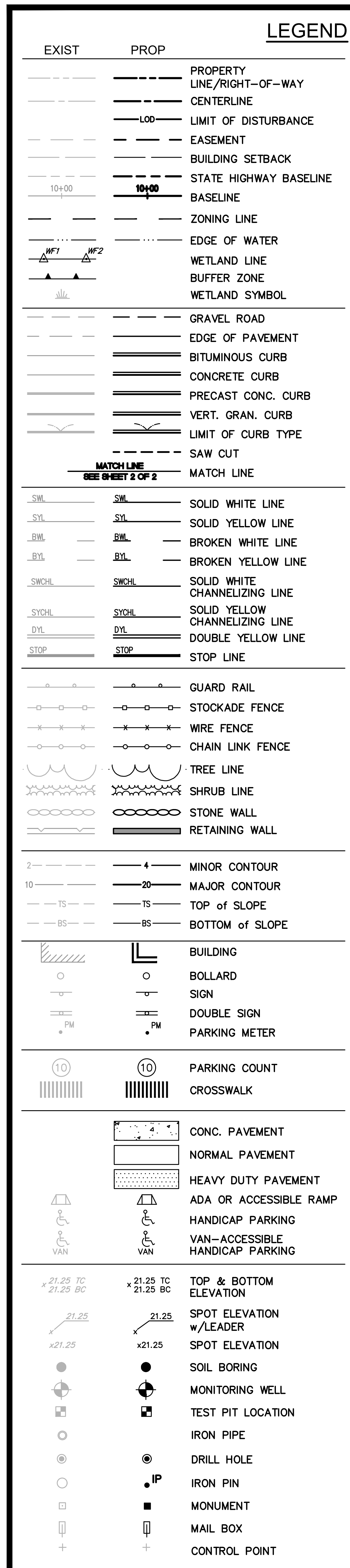

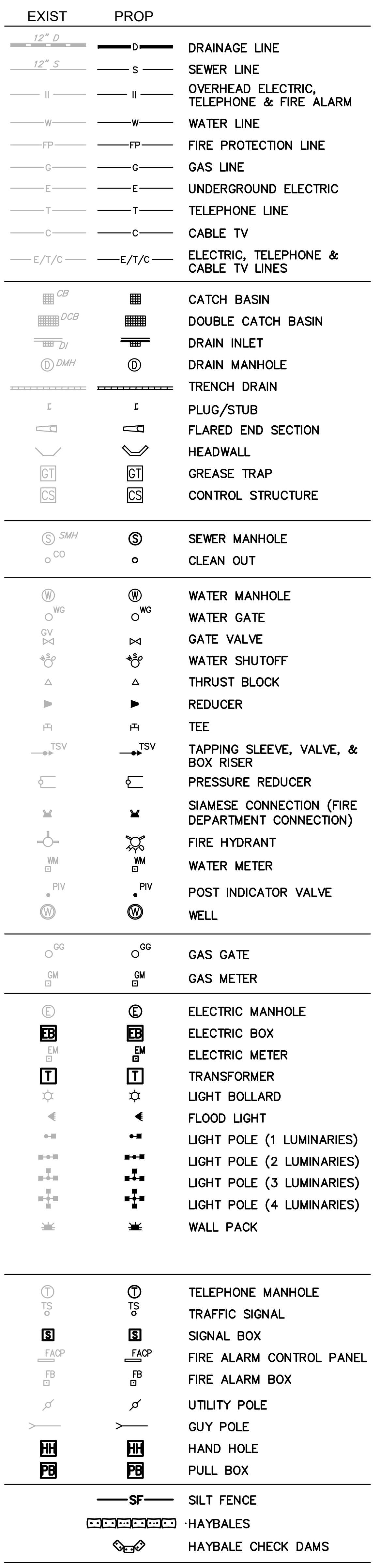

LEGEND NOTE

SYMBOLS AND LEGENDS OF PROJECT FEATURES ARE GRAPHIC REPRESENTATIONS AND ARE NOT NECESSARILY SHOWN ON THE DRAWINGS TO SCALE OR TO THEIR ACTUAL DIMENSION OR LOCATION. COORDINATE DETAIL SHEET DIMENSIONS, MANUFACTURERS' LITERATURE, SHOP DRAWINGS, AND FIELD MEASUREMENTS OF SUPPLIED PRODUCTS FOR LAYOUT OF THE PROJECT FEATURES.

PLANNING BOARD APPROVAL

PLANNING BOARD CHAIR OR DESIGNEE DATE

GENERAL NOTES

1. REFERENCES:
   A. THE STATE OF RHODE ISLAND STANDARD SPECIFICATIONS FOR ROAD AND BRIDGE CONSTRUCTION, 2018 EDITION, REVISIONS AND ALL CURRENT ADDENDA, ARE MADE A PART HEREOF, AS IF ATTACHED HERETO. ALL REFERENCES TO "STATE STANDARD SPECIFICATIONS" SHALL REFER TO THE LATEST EDITION OF THE STATE OF RHODE ISLAND STANDARD SPECIFICATIONS FOR ROAD AND BRIDGE CONSTRUCTION.

   B. THE STATE OF RHODE ISLAND STANDARD DETAILS, 2015 EDITION, AND ALL CURRENT REVISIONS, ARE MADE A PART HEREOF, AS IF ATTACHED HERETO. ALL REFERENCES TO "STATE STANDARD DETAILS" OR "R.I. STD. #.#.#" SHALL REFER TO THE LATEST EDITION OF THE STATE OF RHODE ISLANDS STANDARD DETAILS.

   C. THE STATE OF RHODE ISLAND SOIL EROSION AND SEDIMENT CONTROL HANDBOOK, 2016 EDITION, REVISIONS AND ALL CURRENT ADDENDA, ARE MADE A PART HEREOF, AS IF ATTACHED HERETO. ALL REFERENCES TO "SOIL EROSION AND SEDIMENT CONTROL HANDBOOK" SHALL REFER TO THE LATEST EDITION OF THE STATE OF RHODE ISLAND SOIL EROSION AND SEDIMENT CONTROL HANDBOOK.

   D. THE STATE OF RHODE ISLAND COASTAL RESOURCES MANAGEMENT COUNCIL, COASTAL MANAGEMENT PROGRAM "RED BOOK" (650-RICP-20-00-01), 2022 EDITION, REVISIONS AND ALL CURRENT ADDENDA, ARE MADE A PART HEREOF, AS IF ATTACHED HERETO.

   E. THE STATE OF RHODE ISLAND COASTAL RESOURCES MANAGEMENT COUNCIL, COASTAL MANAGEMENT PROGRAM "METRO BAY REGION SPECIAL AREA MANAGEMENT PLAN" (650-RICR-20-00-5),2022 EDITION, REVISIONS AND ALL CURRENT ADDENDA, ARE MADE A PART HEREOF, AS IF ATTACHED HERETO.

   F. THE SITE-SPECIFIC SOIL EROSION AND SEDIMENT CONTROL PLAN (SESC PLAN) PREPARED BY FUSS & O'NEILL, INC., DATED NOVEMBER 4, 2022, IS MADE A PART HEREOF, AS IF ATTACHED HERETO.

2. EXISTING CONDITIONS:
   A. SURVEY:
   PROPERTY BOUNDARY AND TOPOGRAPHICAL INFORMATION WERE OBTAINED FROM A PLAN TITLED BOUNDARY AND TOPOGRAPHIC SURVEY, BY CONTROL POINT ASSOCIATES, INC., DATED SEPTEMBER 28, 2021.

   B. FLOOD ZONE:
   THE SUBJECT SITE LIES WITHIN ZONE "AE", A SPECIAL FLOOD HAZARD AREA SUBJECT TO INUNDATION BY 1% ANNUAL-CHANCE FLOOD EVENT, WITH BASE FLOOD ELEVATION OF 12 FT; & ZONE "VE", A SPECIAL FLOOD ZONE AREA, WITH BASE FLOOD ELEVATION OF 14 FT, & ZONE X, WITH 0.2% ANNUAL CHANCE FLOOD HAZARD, AREA OF 1% ANNUAL CHANCE FLOOD WITH AVERAGE DEPTH LESS THAN ONE FOOT OR WITH DRAINAGE AREAS OF LESS THAN ONE SQUARE MILE, PER FLOOD INSURANCE RATE MAP (FIRM) 44001C0014H, EFFECTIVE JULY 7, 2014.

   C. UTILITIES:
   THE LOCATIONS OF EXISTING UNDERGROUND UTILITIES SHOWN ARE APPROXIMATE ONLY AND HAVE NOT YET BEEN INDEPENDENTLY VERIFIED BY THE OWNER OR ITS REPRESENTATIVE.

3. MATERIAL:
   A. CURBING:
   CURBING SHALL BE GRANITE (R.I. STD. 7.3.0), CONCRETE (R.I. STD. 7.1.0) OR BITUMINOUS BERM (R.I. STD. 7.5.1) AND IN ACCORDANCE WITH SECTION M.09 OF THE STATE STANDARD SPECIFICATIONS.

   B. BITUMINOUS CONCRETE PAVEMENT:
   BITUMINOUS PAVEMENTS SHALL MEET REQUIREMENTS OF PART 400 OF THE STATE STANDARD SPECIFICATIONS.

   C. CEMENT CONCRETE SIDEWALKS:
   ALL PORTLAND CEMENT CONCRETE USED IN THE CONSTRUCTION OF THE CEMENT CONCRETE SIDEWALKS SHALL BE CLASS A(AE) AND CONFORM TO THE REQUIREMENTS AS SET FORTH IN SUBSECTIONS 601.01.1 AND 601.03.1 OF THE STATE STANDARD SPECIFICATIONS.

   D. SIGNAGE:
   ALL SIGNAGE SHALL MEET MUTCD REQUIREMENTS AND COMPLY WITH STANDARDS IN RIDOT SECTIONS T.15. AND M.16.

4. UTILITIES:

   A. STORM DRAINAGES:
   STORM DRAIN PIPING SHALL BE SMOOTH LINED BE DOUBLE-WALL HIGH DENSITY POLYETHYLENE PIPE, (n=0.012) WITH WATERTIGHT JOINTS. THE SIZES OF ALL PIPES ARE NOTED ON THE PLANS.

   ALL CATCH BASINS SHALL BE PRECAST CONCRETE, AS SPECIFIED ON THE DETAIL SHEETS, WITH BICYCLE SAFE GRATES, R.I. STANDARD 6.3.2, OR APPROVED EQUAL.

   B. SEWER:
   ALL SEWER PIPE, UNLESS OTHERWISE SPECIFIED, SHALL BE POLYVINYL CHLORIDE (SDR 35).

   CLEAN OUTS SHALL BE INSTALLED WHERE THE DISTANCE FROM THE BUILDING TO THE MAIN SEWER IS GREATER THAN 100 FEET OR WHERE BENDS GREATER THAN 45° ARE PROPOSED. CLEAN OUTS SHALL BE MADE BY INSTALLING 'Y' AND ONE-EIGHTH BENDS OF THE SAME DIAMETER AS THE BUILDING SEWER, OR A MAXIMUM OF FOUR INCHES. THE CLEAN OUT SHALL BE BROUGHT UP FROM THE BUILDING SEWER TO FINISH GRADE WITH A ROADWAY BOX.

   SEWER INSTALLATION PRACTICES AND APPURTENANCES SHALL BE IN ACCORDANCE WITH TOWN OF BRISTOL DPW STANDARDS.

   C. GAS AND ELECTRIC:
   COORDINATE AND INSTALL GAS, ELECTRIC, AND COMMUNICATIONS UTILITIES IN ACCORDANCE WITH THE RULES AND REGULATIONS OF THE APPROPRIATE UTILITY COMPANIES.

   D. WATER:
   WATER MAINS SHALL BE CEMENT LINED DUCTILE IRON, DUCTILE IRON SHALL BE CLASS 52 AND CONFORM TO AWWA C151. CEMENT LINING SHALL CONFORM TO AWWA C104 AND HAVE DOUBLE THICKNESS. JOINTS AT FITTINGS, VALVES, AND HYDRANT LATERALS SHALL BE MECHANICAL JOINTS, AWWA C11, WITH NEOPRENE GASKETS. JOINTS AT OTHER LOCATIONS SHALL BE PUSH-ON TYPE. AWWA C111, WITH NEOPRENE OR SYNTHETIC RUBBER GASKETS. FITTINGS SHALL BE CEMENT-LINED, DUCTILE IRON, AWWA C110, WITH A 250 PSI MINIMUM.

   WATER SERVICE SHALL BE INSTALLED IN ACCORDANCE WITH BRISTOL COUNTY WATER AUTHORITY STANDARDS. WATER SERVICE, GREATER THAN 2-INCH DIAMETER, SHALL BE CLASS 52 CEMENT LINED DUCTILE IRON AND CONFORM TO AWWA C151. CEMENT LINING SHALL CONFORM TO AWWA C104 AND HAVE DOUBLE THICKNESS. JOINTS AT FITTINGS, VALVES, AND HYDRANT LATERALS SHALL BE MECHANICAL JOINTS, AWWA C111, WITH NEOPRENE GASKETS. JOINTS AT OTHER LOCATIONS SHALL BE PUSH-ON TYPE, AWWA C111, WITH NEOPRENE OR SYNTHETIC RUBBER GASKETS. FITTINGS SHALL BE CEMENT-LINED, DUCTILE IRON, AWWA C110, WITH A 250 PSI MINIMUM.

   CURB STOP BOXES SHALL BE IN CONFORMANCE WITH BRISTOL COUNTY WATER AUTHORITY STANDARDS.

   ALL WATER GATES AND VALVES SHALL BE NRS, MEET AWWA C500 AND C509 STANDARDS, AND OPEN TO THE LEFT. ALL WATER LINES SHALL HAVE A MINIMUM OF 4.5 FEET OF GROUND COVER AND A MINIMUM OF 10 FOOT HORIZONTAL SEPARATION FROM THE SEWER SYSTEM. WHERE THE WATER MAIN CROSSES ANY UTILITY A VERTICAL CLEARANCE OF 18 INCHES MUST BE MAINTAINED. AT CROSSINGS BETWEEN WATER AND SEWER LINES, THE SEWER LINE SHALL BE SLEEVED AND ENCASED IN CONCRETE FOR A DISTANCE OF AT LEAST 10-FEET IN EACH DIRECTION OF THE CROSSING.

ABBREVIATIONS

GENERAL	
APPROX	APPROXIMATE
BIT	BITUMINOUS PAVEMENT
BW	BOTTOM OF WALL
CC	CONCRETE CURB
CCB	CAPE CODE BERM
ELEV	ELEVATION
EXIST	EXISTING
GC	GRANITE CURB
MAX	MAXIMUM
MIN	MINIMUM
NTS	NOT TO SCALE
PCC	PRECAST CONCRETE CURB
PROP	PROPOSED
R&D	REMOVE AND DISPOSE
R&R	REMOVE AND RESET
R&S	REMOVE AND STACK
TOS	TOP OF SLOPE
TW	TOP OF WALL
TYP	TYPICAL
VGC	VERTICAL GRANITE CURB

UTILITY	
CB	CATCH BASIN
CMP	CORRUGATED METAL PIPE
CPP	CORRUGATED POLYETHYLENE PIPE
DCB	DOUBLE CATCH BASIN
DI	DUCTILE IRON PIPE
F&G	FRAME AND GRATE
F&C	FRAME AND COVER
HDPE	HIGH DENSITY POLYETHYLENE
HYD	HYDRANT
INV	INVERT ELEVATION
PVC	POLYVINYL CHLORIDE PIPE
RCP	REINFORCED CONCRETE PIPE
RD	ROOF DRAIN
SMH	SEWER MANHOLE
TSV	TAPPING SLEEVE, VALVE AND BOX
UP	UTILITY POLE

GENERAL CONSTRUCTION REQUIREMENTS

1. THE SITE IS A REGULATED SITE UNDER THE RIDEM "RULES AND REGULATIONS FOR THE INVESTIGATION AND REMEDIATION OF HAZARDOUS MATERIALS RELEASES" ("REMEDIATION REGULATIONS"), AND A SITE-SPECIFIC REMEDIAL ACTION WORK PLAN (RAWP). COMPLY WITH THE RAWP AND RIDEM OFFICE OF WASTE MANAGEMENT REQUIREMENTS FOR ALL LAND DISTURBANCE ACTIVITIES AND CONSTRUCTION. ALL EXCESS EXCAVATED MATERIALS, EXCESS FILL, EXCESS CONSTRUCTION MATERIALS, AND DEBRIS SHALL BE REMOVED FROM THE SITE AND SHALL BE DISPOSED OF IN ACCORDANCE WITH APPLICABLE LAWS, AND RAWP.

1.1. ALL EXISTING SOIL AT THE SITE IS CONSIDERED TO BE REGULATED SOIL, FALLS UNDER RIDEM JURISDICTION, AND AT THE END OF THE PROJECT, SHOULD BE COVERED BY A SOIL CAP. ALL EXCAVATED ON-SITE SOIL TO BE REMOVED FROM THE SITE BY THE CONTRACTOR MUST BE MANAGED IN ACCORDANCE WITH THE RAWP AND DISPOSED OF AT A RIDEM-APPROVED FACILITY.

1.2. PRIOR TO IMPORTATION TO THE SITE, ALL EARTHEN MATERIAL, INCLUDING BUT NOT LIMITED TO BACKFILL, BEDDING, BORROW, GRANULAR MATERIAL, FILL, GRAVEL BORROW, AND GRAVEL BASE, MUST BE LABORATORY ANALYZED AND APPROVED AS CLEAN FILL BY THE ENGINEER IN ACCORDANCE WITH THE RAWP.

2. THE SITE IS REGULATED UNDER OSHA 29 CFR 1910.120 AND 1926.65. ALL CONTRACTORS AND WORKERS SHALL MAINTAIN COMPLIANCE WITH HAZARDOUS WASTE OPERATIONS AND EMERGENCY RESPONSE (HAZWOPER) TRAINING AND CERTIFICATION REQUIREMENTS.

3. CONTRACTOR IS RESPONSIBLE FOR PREPARING AND FOLLOWING A SITE-SPECIFIC HEALTH AND SAFETY PLAN (HASP) IN ACCORDANCE WITH OSHA 29 CFR 1910.120. A COPY MUST BE MAINTAINED ON-SITE AT ALL TIMES AND BE AVAILABLE FOR EXAMINATION BY THE OWNER AND ENGINEER, IF REQUESTED.THE SITE IS REGULATED UNDER OSHA 29 CFR 1910.120 AND 1926.65. ALL CONTRACTORS AND WORKERS SHALL MAINTAIN COMPLIANCE WITH HAZARDOUS WASTE OPERATIONS AND EMERGENCY RESPONSE (HAZWOPER) TRAINING AND CERTIFICATION REQUIREMENTS.

2. CONTRACTOR IS RESPONSIBLE FOR PREPARING AND FOLLOWING A SITE-SPECIFIC HEALTH AND SAFETY PLAN (HASP) IN ACCORDANCE WITH OSHA 29 CFR 1910.120. A COPY MUST BE MAINTAINED ON-SITE AT ALL TIMES AND BE AVAILABLE FOR EXAMINATION BY THE OWNER AND ENGINEER, IF REQUESTED.

3. DISCHARGES FROM CONSTRUCTION SITE ARE REGULATED BY THE RHODE ISLAND DEPARTMENT OF ENVIRONMENTAL MANAGEMENT RHODE ISLAND POLLUTANT DISCHARGE SYSTEM ELIMINATION (RIPDES) PROGRAM. THE PROJECT SHALL COMPLY WITH THE CONDITIONS OF THE RIPDES GENERAL PERMIT FOR STORMWATER DISCHARGES ASSOCIATED WITH CONSTRUCTION SITE RUNOFF, AND THE TOWN OF BRISTOL CODE OF ORDINANCES, CHAPTER 29 ARTICLE III "SOIL EROSION, RUNOFF AND SEDIMENT CONTROL".

4. VERIFY THE PROPOSED LAYOUT WITH ITS RELATIONSHIP TO THE EXISTING SITE SURVEY AND CONFIRM ALL DIMENSIONS, SITE CONDITIONS, AND MATERIAL SPECIFICATIONS ARE CONSISTENT. NOTIFY THE OWNER AND ENGINEER IN WRITING OF ANY ERRORS, OMISSIONS OR DISCREPANCIES BEFORE COMMENCING OR PROCEEDING WITH WORK.

5. OBTAIN ALL NECESSARY PERMITS, INSPECTIONS, BONDS, ETC. AND OTHER APPROVAL RELATED ITEMS WITH THE LOCAL AND STATE MUNICIPALITIES. APPLICATION FEES SHALL BE PAID BY OWNER. NO CONSTRUCTION SHALL COMMENCE UNTIL SUCH PERMITS HAVE BEEN SECURED AND THE CONTRACTOR HAS SUPPLIED THE REQUIRED NOTICES.

6. METHODS AND MATERIALS USED IN THE CONSTRUCTION OF IMPROVEMENTS FOR THIS PROJECT SHALL CONFORM TO THE CURRENT CONSTRUCTION STANDARDS AND SPECIFICATIONS OF THE LOCAL MUNICIPALITY AND THE RHODE ISLAND DEPARTMENT OF TRANSPORTATION.

7. DEVIATIONS OR CHANGES FROM THESE PLANS WILL NOT BE ALLOWED UNLESS APPROVED BY THE ENGINEER/OWNER.

8. CONTACT 'DIG SAFE' AT 1-888-344-7233, 72 HOURS PRIOR, EXCLUDING WEEKENDS AND HOLIDAYS, TO ANY EXCAVATION PERFORMED ON SITE.

9. THE EXISTENCE AND/OR LOCATION OF UTILITIES SHOWN ON THESE PLANS MAY BE ONLY APPROXIMATELY CORRECT. MAKE EXPLORATORY EXCAVATIONS AND LOCATE ANY EXISTING UTILITIES AND NOTIFY OWNER/ENGINEER OF ANY DISCREPANCIES FROM CONTRACT DOCUMENTS. THE OWNER SHALL BE NOTIFIED AS TO THE RELOCATIONS REQUIRED PRIOR TO THE START OF CONSTRUCTION. CONTRACTOR IS REQUIRED TO TAKE PRECAUTIONARY MEASURES TO PROTECT THE UTILITIES SHOWN HEREON AND ANY OTHER EXISTING UTILITIES NOT OF RECORD OR NOT SHOWN ON THESE PLANS. THE CONTRACTOR IS RESPONSIBLE FOR REPAIRING, AT HIS/HER EXPENSE, ANY EXISTING UTILITIES DAMAGED DURING CONSTRUCTION.

10. AN APPROVED SET OF PLANS, SIGNED SOIL EROSION AND SEDIMENT CONTROL PLAN (AKA STORMWATER POLLUTION PREVENTION PLAN), AND ALL APPLICABLE PERMITS MUST BE AVAILABLE AT THE CONSTRUCTION SITE AT ALL TIMES.

11. THE CONTRACTOR IS RESPONSIBLE FOR JOB SITE CONDITIONS DURING THE COURSE OF CONSTRUCTION OF THIS PROJECT, INCLUDING SAFETY OF ALL PERSONS AND PROPERTY; THAT THIS REQUIREMENT SHALL APPLY CONTINUOUSLY AND NOT BE LIMITED TO NORMAL WORKING HOURS.

12. IDENTIFY TREES TO BE REMOVED PRIOR TO CONSTRUCTION AND MARK THEM WITH CONSTRUCTION TAPE FOR REVIEW BY THE OWNER/ENGINEER. TREES AND OTHER EXISTING VEGETATION SHALL BE RETAINED WHEREVER FEASIBLE. DO NOT REMOVE TREES UNTIL REVIEWED AND APPROVED BY THE OWNER/ENGINEER.

13. PROVIDE PROPER TRANSITIONS BETWEEN EXISTING AND PROPOSED SITE IMPROVEMENTS.

14. RESTORE HARDSCAPE IMPROVEMENTS WITH MATCHING MATERIALS (I.E. ANY PAVEMENT, WALKS, CURBS, ETC.) THAT MUST BE CUT OR THAT ARE DAMAGED DURING CONSTRUCTION.

15. RESTORE DISTURBED LANDSCAPE AREAS TO ORIGINAL CONDITION (I.E. SEEDED, SODDED, PLANTED) UNLESS OTHERWISE DIRECTED WITHIN CONTRACT DOCUMENTS.

16. ADJUST UTILITY COVERS, GRATES, AND HAND HOLES TO FINISH GRADE.

17. ALL EXCESS EXCAVATED MATERIALS, EXCESS FILL, EXCESS CONSTRUCTION MATERIALS, DEBRIS, AND WASTE SHALL BE REMOVED FROM THE SITE AND SHALL BE DISPOSED OF IN ACCORDANCE WITH APPLICABLE LAWS.

18. DO NOT CLOSE OR OBSTRUCT ROADWAYS, SIDEWALKS, FIRE HYDRANTS, AND UTILITIES WITHOUT APPROPRIATE PERMITS.

19. WORK IS RESTRICTED TO THE HOURS OF 7 AM TO 5 PM ON MONDAY THROUGH FRIDAY, EXCLUDING HOLIDAYS, UNLESS OTHERWISE APPROVED BY THE OWNER.

SOIL EROSION AND SEDIMENT CONTROL

1. A SITE-SPECIFIC SOIL EROSION AND SEDIMENT CONTROL PLAN (SESC PLAN) HAS BEEN PREPARED. THE SESC PLAN MUST BE REVIEWED AND SIGNED BY THE OWNER, OPERATOR (I.E CONTRACTOR), AND CONTRACTOR'S DESIGNATED SESC INSPECTOR. A HARD-COPY OF THE SIGNED SESC PLAN, INCLUDING ALL INSPECTION REPORTS, CORRECTIVE ACTION LOGS, AND ADDENDA, MUST BE KEPT ON SITE AT ALL TIMES THROUGHOUT CONSTRUCTION.

2. FOLLOW THE SITE-SPECIFIC SESC PLAN, SITE PREPARATION PLAN, EROSION AND SEDIMENT CONTROL SPECIFICATION, AS WELL AS RHODE ISLAND SOIL EROSION AND SEDIMENT CONTROL HANDBOOK AND THE THE TOWN OF BRISTOL CODE OF ORDINANCES, CHAPTER 29 ARTICLE III "SOIL EROSION, RUNOFF AND SEDIMENT CONTROL", IN CONSTRUCTING THE EROSION AND SEDIMENT CONTROLS INDICATED ON THE PLANS. ALL EROSION AND SEDIMENT CONTROL MEASURES OR WORKS AND REHABILITATION MEASURES MUST CONFORM TO OR EXCEED THESE REQUIREMENTS.

3. THE TIMELY INSTALLATION, INSPECTION, AND MAINTENANCE/REPLACEMENT OF SEDIMENT AND EROSION CONTROL DEVICES TO ENSURE PROPER OPERATION AND PERMIT COMPLIANCE IS THE RESPONSIBILITY OF THE CONTRACTOR UNTIL CONSTRUCTION OF THE PROJECT IS COMPLETE AND ACCEPTED BY THE OWNER. THE OWNER IS RESPONSIBLE THEREAFTER. ALL EROSION AND SEDIMENT CONTROL MEASURES SHALL CONTINUE TO BE MAINTAINED IN EFFECTIVE CONDITION UNTIL SITE STABILIZATION.

4. PRIOR TO THE COMMENCEMENT OF CONSTRUCTION ACTIVITIES, INSTALL ALL EROSION AND SEDIMENT CONTROL DEVICES AS SHOWN ON THE PLAN, OR AS DIRECTED BY THE RHODE ISLAND DEPARTMENT OF ENVIRONMENTAL MANAGEMENT AND LOCAL MUNICIPALITY, OR AS MAY BE REQUIRED TO PREVENT SEDIMENT FLOW TO STORM DRAINS OR SURFACE WATERS.

5. AN INSPECTION OF STORMWATER CONTROL MEASURES MUST BE CONDUCTED BY THE CONTRACTOR AT LEAST ONCE EVERY SEVEN (7) CALENDAR DAYS, AND WITHIN TWENTY-FOUR (24) HOURS AFTER ANY STORM EVENT WHICH GENERATES AT LEAST 0.25 INCHES OF RAINFALL PER TWENTY-FOUR (24) HOUR PERIOD.

6. PREPARE AN INSPECTION REPORT SUMMARIZING THE SCOPE OF THE INSPECTION, NAME(S) AND TITLES OF PERSONNEL MAKING THE INSPECTION, THE DATE(S) OF THE INSPECTION, MAJOR OBSERVATIONS RELATING TO THE IMPLEMENTATION OF THE SESC PLAN, AND CORRECTIVE ACTIONS WHICH MUST BE MADE. SUCH REPORTS MUST IDENTIFY ANY INCIDENTS OF NONCOMPLIANCE. WHERE AN INSPECTION DOES NOT IDENTIFY ANY INCIDENTS OF NONCOMPLIANCE, A INSPECTION REPORT MUST STILL BE PREPARED TO CERTIFY THAT THE SITE IS IN COMPLIANCE WITH THE SESC PLAN AND RIPDES PERMIT. THE INSPECTION REPORT MUST BE SIGNED BY THE INSPECTOR AND OPERATOR AND KEPT WITH THE ON-SITE SESC PLAN.

7. FOLLOWING AN INSPECTION, ALL CORRECTIVE ACTIONS MUST BE COMPLETED WITHIN SEVEN (7) CALENDAR DAYS. A CORRECTIVE ACTION LOG MUST BE SIGNED BY THE OPERATOR AND KEPT WITH THE ON-SITE SESC PLAN.

8. BASED ON THE RESULTS OF THE INSPECTIONS, THE SESC PLAN MUST BE REVISED AS APPROPRIATE, BUT IN NO CASE LATER THAN SEVEN (7) CALENDAR DAYS FOLLOWING THE INSPECTION. SUCH MODIFICATIONS MUST PROVIDE FOR IMPLEMENTATION OF ANY CHANGES TO THE SESC PLAN WITHIN SEVEN (7) CALENDAR DAYS FOLLOWING THE INSPECTION.

9. IF AN INSPECTION REVEALS A DISCHARGE OF SEDIMENTS TO THE WATERS OF THE STATE OR A SEPARATE STORM SEWER SYSTEM, THE PERMITTEE MUST NOTIFY THIS OFFICE OF THE NATURE OF THE DISCHARGE, THE MEASURES TAKEN TO CLEAN UP THE DISCHARGE, AND THE MEASURES TAKEN TO PREVENT FUTURE RELEASES.

10. A HARD COPY OF THE COMPLETE SESC PLAN, INCLUDING ALL INSPECTION REPORTS, CORRECTIVE ACTION LOGS, AND ADDENDA, MUST BE RETAINED BY THE OWNER FOR AT LEAST FIVE (5) YEARS FROM THE DATE THAT THE SITE HAS UNDERGONE FINAL STABILIZATION.

SPILL PREVENTION AND RESPONSE PROCEDURE

1. ANY INADVERTENT OR DELIBERATE DISCHARGE OF WASTE OIL OR ANY OTHER POLLUTANT TO THE STORMWATER MANAGEMENT SYSTEM (I.E. INFILTRATION BEST MANAGEMENT PRACTICES, OR CLOSED-CONDUIT DRAINAGE SYSTEM THAT DISCHARGES TO MUNICIPAL SEPARATE STORM SEWER SYSTEM OR WATER BODY) REQUIRES IMMEDIATE NOTIFICATION TO THE RIDEM OIL POLLUTION CONTROL PROGRAM AT (401) 277-2284, AS PER THE OIL POLLUTION CONTROL REGULATIONS. DURING NON-WORKING HOURS, NOTIFICATION OF SPILLS CAN BE MADE TO THE RIDEM DIVISION OF ENFORCEMENT AT (401) 222-3070 (THE 24-HOUR EMERGENCY RESPONSE PHONE NUMBER).

2. ANY INCIDENT OF GROUNDWATER CONTAMINATION RESULTING FROM THE IMPROPER DISCHARGE OF POLLUTANTS TO THE STORMWATER MANAGEMENT SYSTEM SHALL BE THE RESPONSIBILITY OF THE PROPERTY OWNER AS WELL AS ANY OTHER PARTIES THAT THE RIDEM DETERMINES TO BE RESPONSIBLE FOR THE CONTAMINATION. PURSUANT TO STATE LAWS AND REGULATIONS, THE RIDEM MAY REQUIRE THE PROPERTY OWNER, CONTRACTOR, AND OTHER RESPONSIBLE PARTIES TO REMEDIATE ANY INCIDENTS THAT MAY ADVERSELY IMPACT GROUNDWATER QUALITY.

3. UPON TRANSFER OF THE PROPERTY, THE NEW OWNER SHALL BE INFORMED AS TO THE LEGAL RESPONSIBILITIES ASSOCIATED WITH STORMWATER MANAGEMENT SYSTEM, AS INDICATED ABOVE.

STORMWATER MAINTENANCE PROGRAM

1. OPERATION AND MAINTENANCE OF STORMWATER MANAGEMENT SYSTEM SHALL BE CONDUCTED IN ACCORDANCE WITH SITE-SPECIFIC LONG-TERM OPERATION & MAINTENANCE PLAN.

CONSTRUCTION SEQUENCE

CONSTRUCTION ACTIVITIES ASSOCIATED WITH THIS PROJECT ARE EXPECTED TO COMMENCE IN TBD AND WILL BE COMPLETED BY TBD. THE GENERAL SEQUENCE FOR EACH PHASE OF CONSTRUCTION IS AS FOLLOWS:

1. INSTALL PERIMETER SEDIMENT CONTROL BARRIERS, INLET PROTECTION, TREE PROTECTION AND PROPOSED CONSTRUCTION ACCESSES.

2. CLEAR AND GRUB SITE, REMOVE PAVEMENT, REMOVE MATERIALS TO BE DISPOSED OF, AND STOCKPILE ITEMS AS DEPICTED ON PLANS.

3. RAZE CONCRETE MASONRY BLOCK STRUCTURE ON MILL PROPERTY.

4. PERFORM SELECTIVE DEMOLITION WITHIN BUILDING INTERIOR AND RENOVATE MILL BUILDING PER ARCHITECTURAL PLANS.

5. CONDUCT ROUGH GRADING AND STOCKPILE EXCESS SOILS FOR REMOVAL OR REUSE.

6. INSTALL STORMWATER MANAGEMENT SYSTEMS, STORM DRAINS, AND UTILITIES.

7. COMPACT SUBGRADE AND INSTALL GRAVEL BORROW IN ALL AREAS TO BE PAVED WITH BITUMINOUS OR CONCRETE PAVEMENT.

8. INSTALL PROPOSED CURBING.

9. INSTALL BASE AND BINDER COURSES FOR ALL PAVED AREAS.

10. CONDUCT FINAL GRADING OF LANDSCAPED AREAS, CONSTRUCT SIDEWALKS AND PERVIOUS WALKWAYS, AND INSTALL FENCING.

11. PERMANENTLY SEED ALL NON-PAVED AREAS AND INSTALL LANDSCAPING.

12. INSTALL THE SURFACE COURSE FOR ROADWAYS AND PARKING AREAS.

13. INSTALL PAVEMENT MARKINGS AND SIGNAGE.

11. REMOVE TEMPORARY EROSION CONTROLS MEASURES ONCE PERMANENT VEGETATION COVER HAS BEEN ESTABLISHED AND THE SITE IS STABILIZED, INSPECTED, AND APPROVED BY THE CITY OF PROVIDENCE AND THE ENGINEER.

File Path: \\private\DFS\CadProj\DWG\P2006\1150\A22\Civil\Plan\Permitting Plans\20061150A22_COV01.dwg Layout: CN-001 Plotted: Tue, December 06, 2022 - 1:18 PM User: ajohnson
Plotter: NONE CTB File: FO.STB
LAYER STATE:
MS VIEW:

No.	DATE	DESCRIPTION	DESIGNER	REVIEWER

SEAL
SHAWN M. MARTIN
No. 7487
12/1/22
REGISTERED PROFESSIONAL ENGINEER (CIVIL)

SEAL

SCALE:
HORZ.: NOT TO SCALE
VERT.:
DATUM:
HORZ.:
VERT.:
0
GRAPHIC SCALE

FUSS & O'NEILL
317 IRON HORSE WAY, SUITE 204
PROVIDENCE, RI 02908
401.861.3070
www.fando.com

BRADY SULLIVAN PROPERTIES, LLC

GENERAL NOTES AND LEGEND

BRISTOL YARN MILL
125 THAMES STREET BRISTOL, RHODE ISLAND

PROJ. No.: 20061150.A22
DATE: NOVEMBER 29, 2022
CN-001
SHEET 2 OF 26

LEGEND

124	EXISTING CONTOUR
125	EXISTING CONTOUR
× 123.45	EXISTING SPOT ELEVATION
× TC 123.45	EXISTING TOP OF CURB ELEVATION
× G 122.95	EXISTING GUTTER ELEVATION
× TW 123.45	EXISTING TOP OF WALL ELEVATION
× BW 122.95	EXISTING BOTTOM OF WALL ELEVATION
× TI 123.45	EXISTING TOP OF ISLAND ELEVATION
× BI 122.95	EXISTING BOTTOM OF ISLAND ELEVATION
× FF 123.45	EXISTING FINISHED FLOOR ELEVATION
× DS 123.45	EXISTING DOOR SILL ELEVATION
× [LG 125.45]	EXISTING LEGAL GRADE ELEVATION
	HYDRANT
WV	WATER VALVE
VALVE	UNKNOWN VALVE
GV	GAS VALVE
GM	GAS METER
EM	ELECTRIC METER
OH	OVERHEAD WIRES
G	APPROX. LOC. UNDERGROUND GAS LINE
E	APPROX. LOC. UNDERGROUND ELECTRIC LINE
W	APPROX. LOC. UNDERGROUND WATER LINE
S	APPROX. LOC. UNDERGROUND SANITARY / SEWER LINE
UP	UTILITY POLE
	AREA LIGHT
	SIGN
	BOLLARD
CLF	CHAIN LINK FENCE
DC	DEPRESSED CURB
EOC	EDGE OF CONCRETE
EOP	EDGE OF PAVEMENT
LSA	LANDSCAPED AREA
MC	METAL COVER
(TYP)	TYPICAL
D DMH	DRAINAGE/STORM MANHOLE
E EMH	ELECTRIC MANHOLE
S SMH	SANITARY/SEWER MANHOLE
MH	UNKNOWN MANHOLE
W WMH	WATER MANHOLE
CB	CATCH BASIN OR INLET
14	TREE & TRUNK SIZE
10	PARKING SPACE COUNT
	DEPRESSED CURB
SWL	SOLID WHITE LINE
DYL	DOUBLE YELLOW LINE
HT	HEIGHT
BLDG	BUILDING
BFPA	BUILDING FOOTPRINT AREA
NVP	NO VISIBLE PIPE
DHF	DRILL HOLE FOUND
PVC	POLYVINYL CHLORIDE PIPE
CI	CAST IRON PIPE
DI	DUCTILE IRON PIPE
INV	INVERT ELEVATION
GRT	GRATE ELEVATION
MBW	MASONRY BLOCK WALL

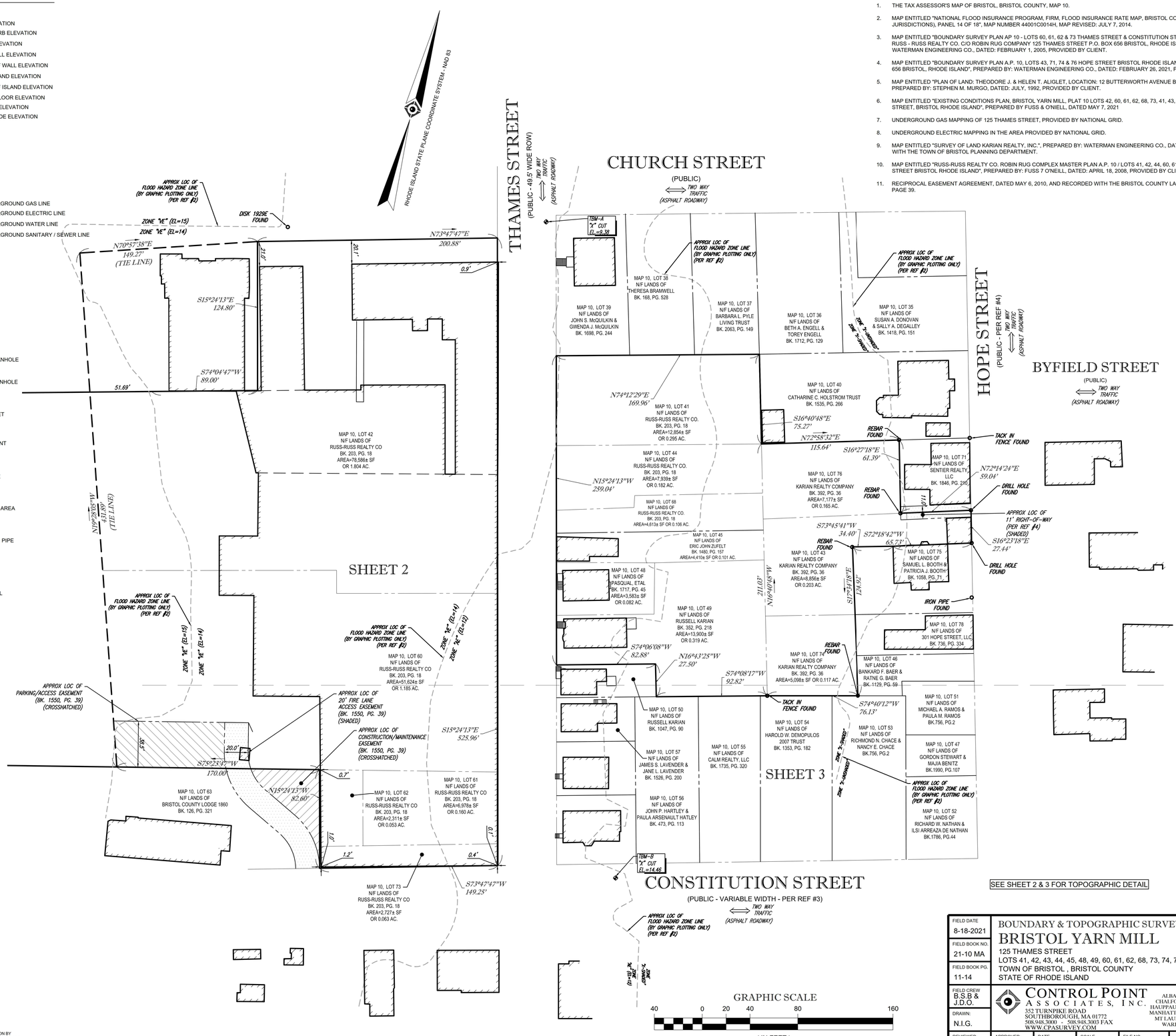

REFERENCES:

1. THE TAX ASSESSOR'S MAP OF BRISTOL, BRISTOL COUNTY, MAP 10.
2. MAP ENTITLED "NATIONAL FLOOD INSURANCE PROGRAM, FIRM, FLOOD INSURANCE RATE MAP, BRISTOL COUNTY, RHODE ISLAND 9ALL JURISDICTIONS), PANEL 14 OF 18", MAP NUMBER 440010C0014H, MAP REVISED: JULY 7, 2014.
3. MAP ENTITLED "BOUNDARY SURVEY PLAN AP 10 - LOTS 60, 61, 62 & 73 THAMES STREET & CONSTITUTION STREET BRISTOL, RHODE ISLAND RUSS - RUSS REALTY CO. C/O ROBIN RUG COMPANY 125 THAMES STREET P.O. BOX 656 BRISTOL, RHODE ISLAND 02809", PREPARED BY: WATERMAN ENGINEERING CO., DATED: FEBRUARY 1, 2005, PROVIDED BY CLIENT.
4. MAP ENTITLED "BOUNDARY SURVEY PLAN A.P. 10, LOTS 43, 71, 74 & 76 HOPE STREET BRISTOL RHODE ISLAND KARIAN REALTY CO. P.O. BOX 656 BRISTOL, RHODE ISLAND", PREPARED BY: WATERMAN ENGINEERING CO., DATED: FEBRUARY 26, 2021, PROVIDED BY CLIENT.
5. MAP ENTITLED "PLAN OF LAND: THEODORE J. & HELEN T. ALIGLET, LOCATION: 12 BUTTERWORTH AVENUE BRISTOL, RHODE ISLAND", PREPARED BY: STEPHEN M. MURGO, DATED: JULY, 1992, PROVIDED BY CLIENT.
6. MAP ENTITLED "EXISTING CONDITIONS PLAN, BRISTOL YARN MILL, PLAT 10 LOTS 42, 60, 61, 62, 68, 73, 41, 43, 44, 49, 74 AND 76, 125 THAMES STREET, BRISTOL RHODE ISLAND", PREPARED BY FUSS & O'NEILL, DATED MAY 7, 2021
7. UNDERGROUND GAS MAPPING OF 125 THAMES STREET, PROVIDED BY NATIONAL GRID.
8. UNDERGROUND ELECTRIC MAPPING IN THE AREA PROVIDED BY NATIONAL GRID.
9. MAP ENTITLED "SURVEY OF LAND KARIAN REALTY, INC.", PREPARED BY: WATERMAN ENGINEERING CO., DATED: AUGUST 1990, ON FILE WITH THE TOWN OF BRISTOL PLANNING DEPARTMENT.
10. MAP ENTITLED "RUSS-RUSS REALTY CO. ROBIN RUG COMPLEX MASTER PLAN A.P. 10 / LOTS 41, 42, 44, 60, 61, 62, 68 & 73 125 THAMES STREET BRISTOL RHODE ISLAND", PREPARED BY: FUSS 7 O'NEILL, DATED: APRIL 18, 2008, PROVIDED BY CLIENT.
11. RECIPROCAL EASEMENT AGREEMENT, DATED MAY 6, 2010, AND RECORDED WITH THE BRISTOL COUNTY LAND RECORDS IN BOOK 1550, PAGE 39.

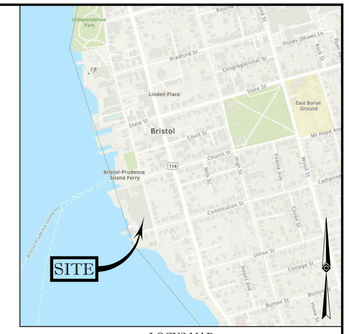

LOCUS MAP
© 2013 ESRI WORLD STREET MAPS
NOT TO SCALE

NOTES:

1. PROPERTY KNOWN AS LOTS 41, 42, 43, 44, 45, 48, 49, 60, 61, 62, 68, 73, 74 & 76 AS SHOWN ON THE TOWN OF BRISTOL, BRISTOL COUNTY, STATE OF RHODE ISLAND MAP NO. 10.
2. LOT 41 AREA = 12,854 SQUARE FEET OR 0.295 ACRES
   LOT 42 AREA = 78,586 SQUARE FEET OR 1.804 ACRES
   LOT 43 AREA = 8,856 SQUARE FEET OR 0.203 ACRES
   LOT 44 AREA = 7,939 SQUARE FEET OR 0.182 ACRES
   LOT 45 AREA = 4,410 SQUARE FEET OR 0.101 ACRES
   LOT 48 AREA = 3,583 SQUARE FEET OR 0.082 ACRES
   LOT 49 AREA = 13,900 SQUARE FEET OR 0.319 ACRES
   LOT 60 AREA = 51,624 SQUARE FEET OR 1.185 ACRES
   LOT 61 AREA = 6,978 SQUARE FEET OR 0.160 ACRES
   LOT 62 AREA = 2,311 SQUARE FEET OR 0.053 ACRES
   LOT 68 AREA = 4,613 SQUARE FEET OR 0.106 ACRES
   LOT 73 AREA = 2,727 SQUARE FEET OR 0.063 ACRES
   LOT 74 AREA = 5,098 SQUARE FEET OR 0.117 ACRES
   LOT 76 AREA = 7,177 SQUARE FEET OR 0.165 ACRES
   TOTAL AREA = 210,656 SQUARE FEET OR 4.835 ACRES
3. LOCATION OF UNDERGROUND UTILITIES ARE APPROXIMATE. LOCATIONS AND SIZES ARE BASED ON UTILITY MARK-OUTS, ABOVE GROUND STRUCTURES THAT WERE VISIBLE & ACCESSIBLE IN THE FIELD, AND THE MAPS AS LISTED IN THE REFERENCES AVAILABLE AT THE TIME OF THE SURVEY. AVAILABLE ASBUILT PLANS AND UTILITY MARKOUT DOES NOT ENSURE MAPPING OF ALL UNDERGROUND UTILITIES AND STRUCTURES. BEFORE ANY EXCAVATION IS TO BEGIN, ALL UNDERGROUND UTILITIES SHOULD BE VERIFIED AS TO THEIR LOCATION, SIZE AND TYPE BY THE PROPER UTILITY COMPANIES. CONTROL POINT ASSOCIATES, INC. DOES NOT GUARANTEE THE UTILITIES SHOWN COMPRISE ALL SUCH UTILITIES IN THE AREA EITHER IN SERVICE OR ABANDONED.

   THE SOURCE OF UNDERGROUND UTILITIES ARE SHOWN UTILIZING A QUALITY LEVEL SYSTEM:

   QUALITY LEVEL D - UTILITIES SHOWN BASED UPON REFERENCE MAPPING OR ORAL HISTORY. NOT FIELD VERIFIED.

   QUALITY LEVEL C - LOCATION OF UTILITY SURFACE FEATURES SUPPLEMENTS REFERENCE MAPPING. INCLUDES MARKOUT BY OTHERS.

   QUALITY LEVEL B - UTILITY LOCATION DATA IS COLLECTED THROUGH GEOPHYSICAL SENSING TECHNOLOGY TO SUPPLEMENT SURFACE FEATURES AND OR REFERENCE MAPPING. INCLUDES MARKOUT BY CONTROL POINT ASSOCIATES, INC.

   QUALITY LEVEL A - HORIZONTAL AND VERTICAL LOCATION OF UTILITIES ARE OBTAINED USING VACUUM EQUIPMENT EXCAVATION OR OTHER METHODS TO EXPOSE THE UTILITY. LOCATION SHOWN AT SINGLE POINT WHERE EXCAVATION OCCURRED UNLESS UTILITY WAS LOCATED PRIOR TO FILLING.
4. THIS PLAN IS BASED ON INFORMATION PROVIDED BY A SURVEY PREPARED IN THE FIELD BY CONTROL POINT ASSOCIATES, INC. AND OTHER REFERENCE MATERIAL AS LISTED HEREON.
5. THIS SURVEY WAS PREPARED WITHOUT THE BENEFIT OF A TITLE REPORT AND IS SUBJECT TO THE RESTRICTIONS, COVENANTS AND/OR EASEMENTS THAT MAY BE CONTAINED THEREIN.
6. BY GRAPHIC PLOTTING ONLY A PORTION OF THE PROPERTY IS LOCATED IN FLOOD HAZARD ZONE "AE" (SPECIAL FLOOD HAZARD AREAS SUBJECT TO INUNDATION BY THE 1% ANNUAL CHANCE FLOOD, BASE FLOOD ELEVATIONS DETERMINED, EL=12), & ZONE "X SHADED" (AREAS OF 0.2% ANNUAL CHANCE FLOOD; AREAS OF 1% ANNUAL CHANCE FLOOD WITH AVERAGE DEPTHS OF LESS THAN 1 FOOT OR WITH DRAINAGE AREAS LESS THAN 1 SQUARE MILE; AND AREAS PROTECTED BY LEVEES FROM %1 ANNUAL CHANCE FLOOD), & ZONE "X-UNSHADED" (AREAS DETERMINED TO BE OUTSIDE THE 0.2% ANNUAL CHANCE FLOODPLAIN), & ZONE "VE" (COSTAL FLOOD ZONE WITH VELOCITY HAZARD (WAVE ACTION); BASE FLOOD ELEVATIONS DETERMINED, EL=14 & EL=15) PER REF #2.
7. ELEVATIONS REFER TO THE NORTH AMERICAN VERTICAL DATUM OF 1988 (NAVD88), BASED ON GPS CBSERVATIONS UTILIZING THE KEYSTONE VRS NETWORK (KEYNETGPS) TAKEN AT THE TIME OF THE FIELD SURVEY.

   TEMPORARY BENCH MARKS SET:

   TBM-A: X-CUT ON BONNET BOLT OF FIRE HYDRANT ALONG EASTERLY LINE OF THAMES STREET AT ELEVATION = 9.38'

   TBM-B: X-CUT ON BONNET BOLT OF FIRE HYDRANT ALONG NORTHERLY LINE OF CONSTITUTION STREET AT ELEVATION = 14.46'

   PRIOR TO CONSTRUCTION IT IS THE CONTRACTOR'S RESPONSIBILITY TO VERIFY THAT THE BENCHMARKS ILLUSTRATED ON THIS SKETCH HAVE NOT BEEN DISTURBED AND THEIR ELEVATIONS HAVE BEEN CONFIRMED. ANY CONFLICTS MUST BE REPORTED PRIOR TO CONSTRUCTION.
8. THE OFFSETS SHOWN ARE NOT TO BE USED FOR THE CONSTRUCTION OF ANY STRUCTURE, FENCE, PERMANENT ADDITION, ETC.

No.	DESCRIPTION OF REVISION	FIELD CREW	DRAWN:	APPROVED:	DATE
1	UPDATED PER RECEIPT OF CLIENT COMMENTS	--	A.L.S.	C.E.L.	10-01-2021

SEE SHEET 2 & 3 FOR TOPOGRAPHIC DETAIL

GRAPHIC SCALE
40 0 20 40 80 160
(IN FEET)
1 inch = 40 ft.

THIS SURVEY HAS BEEN CONDUCTED AND THE PLAN HAS BEEN PREPARED PURSUANT TO 435-RICR-00-00-1.9 OF THE RULES AND REGULATIONS ADOPTED BY THE RHODE ISLAND STATE BOARD OF REGISTRATION FOR PROFESSIONAL LAND SURVEYORS ON DECEMBER 30, 2020 AS FOLLOWS:

1. TYPE OF BOUNDARY SURVEY: — MEASUREMENT SPECIFICATION
   COMPREHENSIVE BOUNDARY SURVEY — I
2. OTHER TYPE OF SURVEY: — MEASUREMENT SPECIFICATION:
   DATA ACCUMULATION SURVEY (TOPOGRAPHIC SURVEY) — III
   VERTICAL CONTROL STANDARD — V-3
   TOPOGRAPHIC SURVEY ACCURACY — T-2
3. THE PURPOSE FOR THE CONDUCT OF THE SURVEY AND FOR THE PREPARATION OF THIS PLAN IS AS FOLLOWS:
   PREPARE BOUNDARY SURVEY AND OBTAIN TOPOGRAPHIC INFORMATION FOR USE AS A BACKGROUND DOCUMENT FOR SITE PLAN PREPARATION.

NOT A VALID ORIGINAL DOCUMENT UNLESS EMBOSSED WITH RAISED IMPRESSION OR STAMPED WITH A BLUE INK SEAL.

CHARLES E. LENT
No. 1947
PROFESSIONAL LAND SURVEYOR

10-01-2021
DATE

CHARLES E. LENT
RHODE ISLAND PROFESSIONAL LAND SURVEYOR #1947
CERTIFICATE OF AUTHORIZATION #A350

FIELD DATE	8-18-2021
FIELD BOOK NO.	21-10 MA
FIELD BOOK PG.	11-14
FIELD CREW	B.S.B & J.D.O.
DRAWN:	N.I.G.
REVIEWED:	B.A.V.
APPROVED:	C.E.L.
DATE	9-28-2021
SCALE	1" = 40'
FILE NO.	03-210289-00
DWG. NO.	1 OF 3

BOUNDARY & TOPOGRAPHIC SURVEY
BRISTOL YARN MILL
125 THAMES STREET
LOTS 41, 42, 43, 44, 45, 48, 49, 60, 61, 62, 68, 73, 74, 76, MAP 10
TOWN OF BRISTOL , BRISTOL COUNTY
STATE OF RHODE ISLAND

CONTROL POINT ASSOCIATES, INC.
552 TURNPIKE ROAD
SOUTHBOROUGH, MA 01772
508.948.3000 - 508.948.3003 FAX
WWW.CPASURVEY.COM
ALBANY, NY 518-217-5010
CHALFONT, PA 215-712-9800
HAUPPAUGE, NY 631-580-2645
MANHATTAN, NY 646-780-0411
MT LAUREL, NJ 609-857-2099
WARREN, NJ 908-668-0099

THE STATE OF RHODE ISLAND REQUIRES NOTIFICATION BY EXCAVATORS, DESIGNERS, OR ANY PERSON PREPARING TO DISTURB THE EARTH'S SURFACE ANYWHERE IN THE STATE.

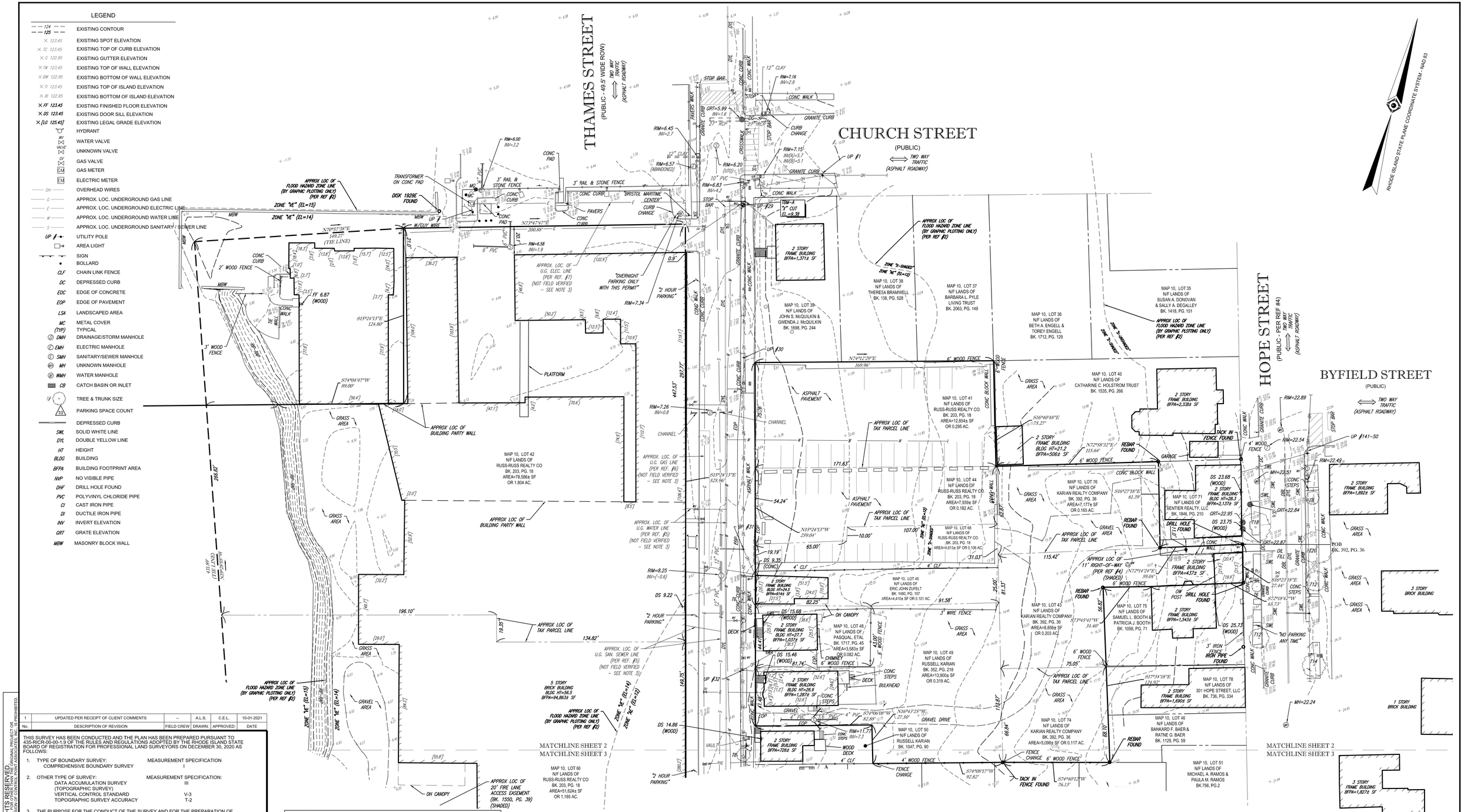

No.	DESCRIPTION OF REVISION	FIELD CREW	DRAWN:	APPROVED:	DATE
1	UPDATED PER RECEIPT OF CLIENT COMMENTS	--	A.L.S.	C.E.L.	10-01-2021

THIS SURVEY HAS BEEN CONDUCTED AND THE PLAN HAS BEEN PREPARED PURSUANT TO 435-RICR-00-00-1.9 OF THE RULES AND REGULATIONS ADOPTED BY THE RHODE ISLAND STATE BOARD OF REGISTRATION FOR PROFESSIONAL LAND SURVEYORS ON DECEMBER 30, 2020 AS FOLLOWS:

1. TYPE OF BOUNDARY SURVEY: MEASUREMENT SPECIFICATION
   COMPREHENSIVE BOUNDARY SURVEY — I
2. OTHER TYPE OF SURVEY: MEASUREMENT SPECIFICATION:
   DATA ACCUMULATION SURVEY (TOPOGRAPHIC SURVEY) — III
   VERTICAL CONTROL STANDARD — V-3
   TOPOGRAPHIC SURVEY ACCURACY — T-2
3. THE PURPOSE FOR THE CONDUCT OF THE SURVEY AND FOR THE PREPARATION OF THIS PLAN IS AS FOLLOWS:
   PREPARE BOUNDARY SURVEY AND OBTAIN TOPOGRAPHIC AND PLANIMETRIC INFORMATION FOR USE AS A BACKGROUND DOCUMENT FOR SITE PLAN PREPARATION.

NOT A VALID ORIGINAL DOCUMENT UNLESS EMBOSSED WITH RAISED IMPRESSION OR STAMPED WITH A BLUE INK SEAL.

CHARLES E. LENT
No. 1947
PROFESSIONAL LAND SURVEYOR

10-01-2021
DATE

CHARLES E. LENT
RHODE ISLAND PROFESSIONAL LAND SURVEYOR #1947
CERTIFICATE OF AUTHORIZATION #A350

FIELD DATE	8-18-2021
FIELD BOOK NO.	21-10 MA
FIELD BOOK PG.	11-14
FIELD CREW	B.S.B & J.D.O.
DRAWN:	N.I.G.
REVIEWED:	B.A.V.
APPROVED:	C.E.L.
DATE	9-28-2021
SCALE	1" = 30'
FILE NO.	03-210289-00
DWG. NO.	2 OF 3

BOUNDARY & TOPOGRAPHIC SURVEY

BRISTOL YARN MILL

125 THAMES STREET
LOTS 41, 42, 43, 44, 45, 48, 49, 60, 61, 62, 68, 73, 74, 76, MAP 10
TOWN OF BRISTOL , BRISTOL COUNTY
STATE OF RHODE ISLAND

CONTROL POINT ASSOCIATES, INC.
352 TURNPIKE ROAD
SOUTHBOROUGH, MA 01772
508.948.3000 - 508.948.3003 FAX
WWW.CPASURVEY.COM
ALBANY, NY 518-217-5010
CHALFONT, PA 215-712-9800
HAUPPAUGE, NY 631-580-2645
MANHATTAN, NY 646-780-0411
MT LAUREL, NJ 609-857-2099
WARREN, NJ 908-668-0099

THE STATE OF RHODE ISLAND REQUIRES NOTIFICATION BY EXCAVATORS, DESIGNERS, OR ANY PERSON PREPARING TO DISTURB THE EARTH'S SURFACE ANYWHERE IN THE STATE.
1-(888)-344-7233
STATE CALL BEFORE YOU DIG!

LEGEND

124	EXISTING CONTOUR
125	
× 123.45	EXISTING SPOT ELEVATION
× TC 123.45	EXISTING TOP OF CURB ELEVATION
× G 122.95	EXISTING GUTTER ELEVATION
× TW 123.45	EXISTING TOP OF WALL ELEVATION
× BW 122.95	EXISTING BOTTOM OF WALL ELEVATION
× TI 123.45	EXISTING TOP OF ISLAND ELEVATION
× BI 122.95	EXISTING BOTTOM OF ISLAND ELEVATION
× FF 123.45	EXISTING FINISHED FLOOR ELEVATION
× DS 123.45	EXISTING DOOR SILL ELEVATION
× [LG 125.45]	EXISTING LEGAL GRADE ELEVATION
	HYDRANT
WV	WATER VALVE
UNKNOWN VALVE	
GV	GAS VALVE
GM	GAS METER
EM	ELECTRIC METER
OH	OVERHEAD WIRES
G	APPROX. LOC. UNDERGROUND GAS LINE
E	APPROX. LOC. UNDERGROUND ELECTRIC LINE
W	APPROX. LOC. UNDERGROUND WATER LINE
S	APPROX. LOC. UNDERGROUND SANITARY / SEWER LINE
UP	UTILITY POLE
	AREA LIGHT
	SIGN
	BOLLARD
CLF	CHAIN LINK FENCE
DC	DEPRESSED CURB
EOC	EDGE OF CONCRETE
EOP	EDGE OF PAVEMENT
LSA	LANDSCAPED AREA
MC	METAL COVER
(TYP)	TYPICAL
DMH	DRAINAGE/STORM MANHOLE
EMH	ELECTRIC MANHOLE
SMH	SANITARY/SEWER MANHOLE
MH	UNKNOWN MANHOLE
WMH	WATER MANHOLE
CB	CATCH BASIN OR INLET
TRUNK	TREE & TRUNK SIZE
10	PARKING SPACE COUNT
	DEPRESSED CURB
SWL	SOLID WHITE LINE
DYL	DOUBLE YELLOW LINE
HT	HEIGHT
BLDG	BUILDING
BFPA	BUILDING FOOTPRINT AREA
NVP	NO VISIBLE PIPE
DHF	DRILL HOLE FOUND
PVC	POLYVINYL CHLORIDE PIPE
CI	CAST IRON PIPE
DI	DUCTILE IRON PIPE
INV	INVERT ELEVATION
GRT	GRATE ELEVATION
MSBW	MASONRY BLOCK WALL

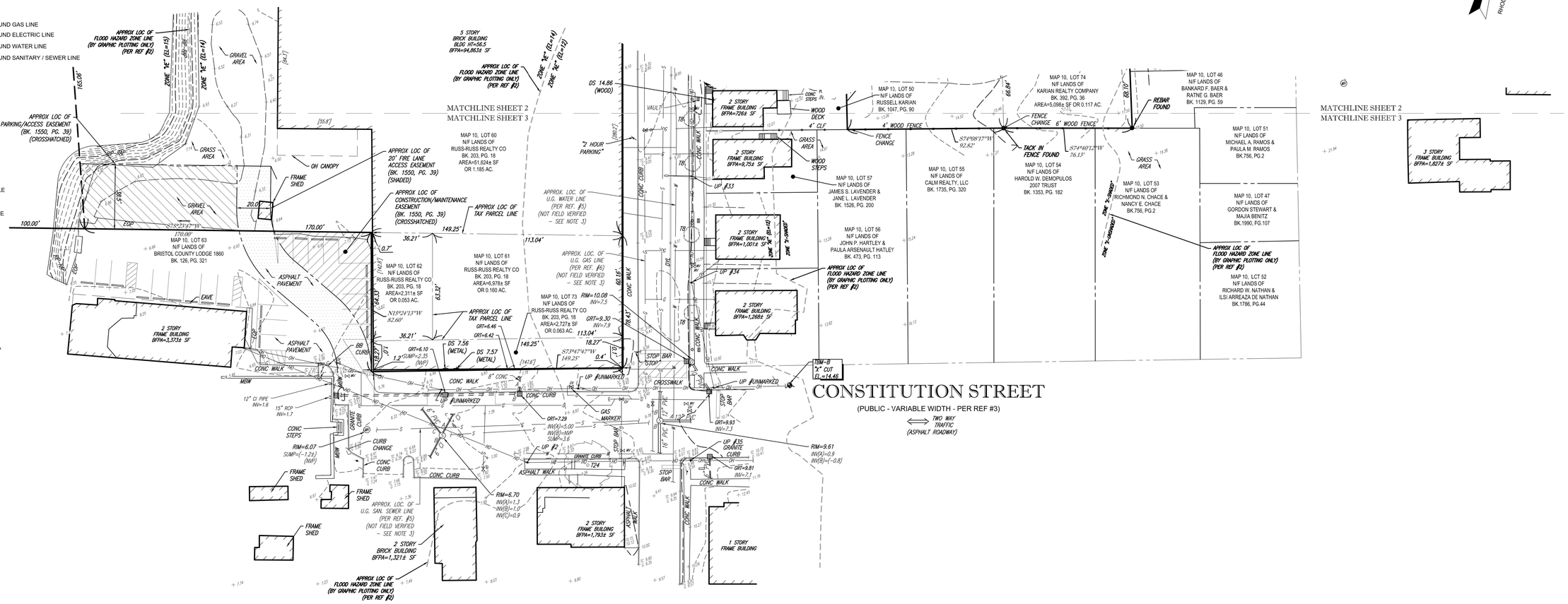

No.	DESCRIPTION OF REVISION	FIELD CREW	DRAWN:	APPROVED:	DATE
1	UPDATED PER RECEIPT OF CLIENT COMMENTS	--	A.L.S.	C.E.L.	10-01-2021

THIS SURVEY HAS BEEN CONDUCTED AND THE PLAN HAS BEEN PREPARED PURSUANT TO 435-RICR-00-00-1.9 OF THE RULES AND REGULATIONS ADOPTED BY THE RHODE ISLAND STATE BOARD OF REGISTRATION FOR PROFESSIONAL LAND SURVEYORS ON DECEMBER 30, 2020 AS FOLLOWS:

1. TYPE OF BOUNDARY SURVEY: MEASUREMENT SPECIFICATION
   COMPREHENSIVE BOUNDARY SURVEY I
2. OTHER TYPE OF SURVEY: MEASUREMENT SPECIFICATION:
   DATA ACCUMULATION SURVEY III
   (TOPOGRAPHIC SURVEY)
   VERTICAL CONTROL STANDARD V-3
   TOPOGRAPHIC SURVEY ACCURACY T-2
3. THE PURPOSE FOR THE CONDUCT OF THE SURVEY AND FOR THE PREPARATION OF THIS PLAN IS AS FOLLOWS:
   PREPARE BOUNDARY SURVEY AND OBTAIN TOPOGRAPHIC AND PLANIMETRIC INFORMATION FOR USE AS A BACKGROUND DOCUMENT FOR SITE PLAN PREPARATION.

NOT A VALID ORIGINAL DOCUMENT UNLESS EMBOSSED WITH RAISED IMPRESSION OR STAMPED WITH A BLUE INK SEAL.

CHARLES E. LENT
RHODE ISLAND
No. 1947
U.S.A.
PROFESSIONAL LAND SURVEYOR

10-01-2021
DATE

CHARLES E. LENT
RHODE ISLAND PROFESSIONAL LAND SURVEYOR #1947
CERTIFICATE OF AUTHORIZATION #A350

SHEET 5 OF 26

FIELD DATE	8-18-2021
FIELD BOOK NO.	21-10 MA
FIELD BOOK PG.	11-14
FIELD CREW	B.S.B & J.D.O.
DRAWN:	N.I.G.

BOUNDARY & TOPOGRAPHIC SURVEY

BRISTOL YARN MILL

125 THAMES STREET
LOTS 41, 42, 43, 44, 45, 48, 49, 60, 61, 62, 68, 73, 74, 76, MAP 10
TOWN OF BRISTOL , BRISTOL COUNTY
STATE OF RHODE ISLAND

CONTROL POINT ASSOCIATES, INC.
352 TURNPIKE ROAD
SOUTHBOROUGH, MA 01772
508.948.3000 - 508.948.3003 FAX
WWW.CPASURVEY.COM
ALBANY, NY 518-217-5010
CHALFONT, PA 215-712-9800
HAUPPAUGE, NY 631-580-2645
MANHATTAN, NY 646-780-0411
MT LAUREL, NJ 609-857-2099
WARREN, NJ 908-668-0099

REVIEWED:	APPROVED:	DATE	SCALE	FILE NO.	DWG. NO.
B.A.V.	C.E.L.	9-28-2021	1" = 30'	03-210289-00	3 OF 3

STOP, CALL BEFORE YOU DIG!
1-888-344-7233

THE STATE OF RHODE ISLAND REQUIRES NOTIFICATION BY EXCAVATORS, DESIGNERS, OR ANY PERSON PREPARING TO DISTURB THE EARTH'S SURFACE ANYWHERE IN THE STATE.

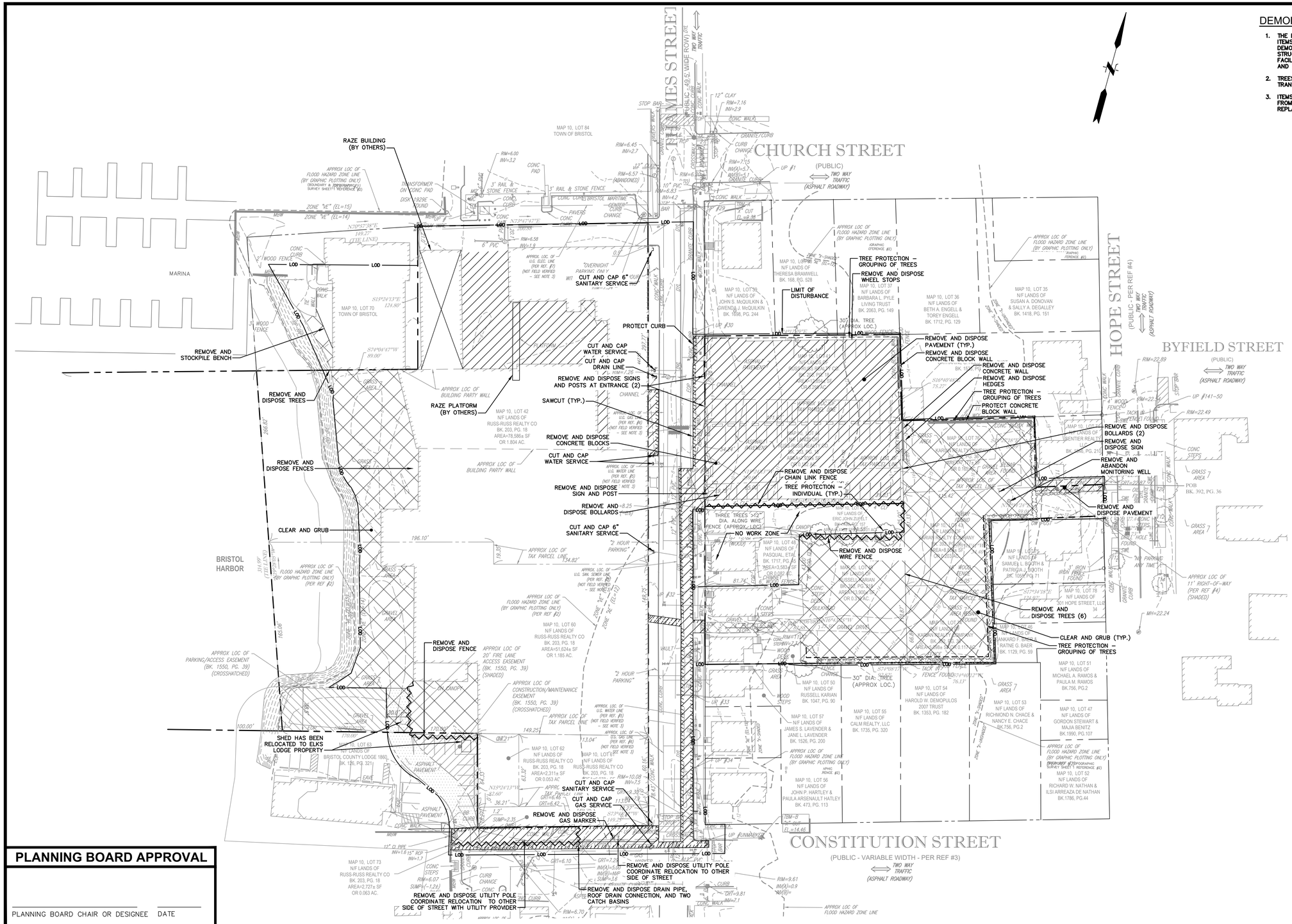

DEMOLITION NOTES

1. THE DEMOLITION PLAN IS PROVIDED FOR INFORMATION ONLY AND MAY NOT INDICATE ALL ITEMS REQUIRED TO BE DEMOLISHED. PERFORM A PRE–BID SITE INSPECTION. COORDINATE DEMOLITION OF UNIDENTIFIED UTILITIES OR STRUCTURES WITH OWNER. DEMOLISH STRUCTURES, SITE IMPROVEMENTS, UTILITIES, ETC. AS REQUIRED TO CONSTRUCT PROPOSED FACILITY AND UTILITY SERVICES. PROTECT ALL PUBLIC AND PRIVATE UTILITIES, SERVICES, AND STRUCTURES THAT ARE NOT DESIGNATED FOR REMOVAL.
2. TREES, BRUSH AND STUMPS REMOVED BY CLEARING & GRUBBING OPERATIONS SHALL BE TRANSPORTED OFF THE PROJECT SITE TO AN APPROVED DISPOSAL LOCATION.
3. ITEMS TO BE STOCKPILED ON–SITE FOR REUSE OR TO BE RELOCATED SHALL BE PROTECTED FROM CONSTRUCTION OPERATIONS. IF DAMAGED DURING CONSTRUCTION THEY SHALL BE REPLACED IN–KIND AT NO ADDITIONAL COST TO THE OWNER.

PLANNING BOARD APPROVAL

PLANNING BOARD CHAIR OR DESIGNEE DATE

No.	DATE	DESCRIPTION	DESIGNER	REVIEWER

SEAL
SHAWN M. MARTIN
No. 7487
12/9/22
REGISTERED PROFESSIONAL ENGINEER (CIVIL)

SEAL

SCALE:
HORZ.: 1"= 40'
VERT.:
DATUM:
HORZ.:NAD 1983
VERT.: NAVD 1988
40 20 0 40
GRAPHIC SCALE

FUSS & O'NEILL
317 IRON HORSE WAY, SUITE 204
PROVIDENCE, RI 02908
401.861.3070
www.fando.com

BRADY SULLIVAN PROPERTIES, LLC

SITE DEMOLITION PLAN

BRISTOL YARN MILL

125 THAMES STREET BRISTOL, RHODE ISLAND

PROJ. No.: 20061150.A22
DATE: NOVEMBER 29, 2022

CP-101

SHEET 6 OF 26

File Path: \\private\DFS\CadProj\DWG\P2006\1150\A22\Civil\Plan\Permitting Plans\20061150A22_DMO01.dwg Layout: CP-101 Plotted: Tue, December 06, 2022 - 1:19 PM User: ajohnson
MS VIEW: Plotter: AUTOCAD PDF (GENERAL DOCUMENTATION).PC3 CTB File: FO.STB
LAYER STATE:

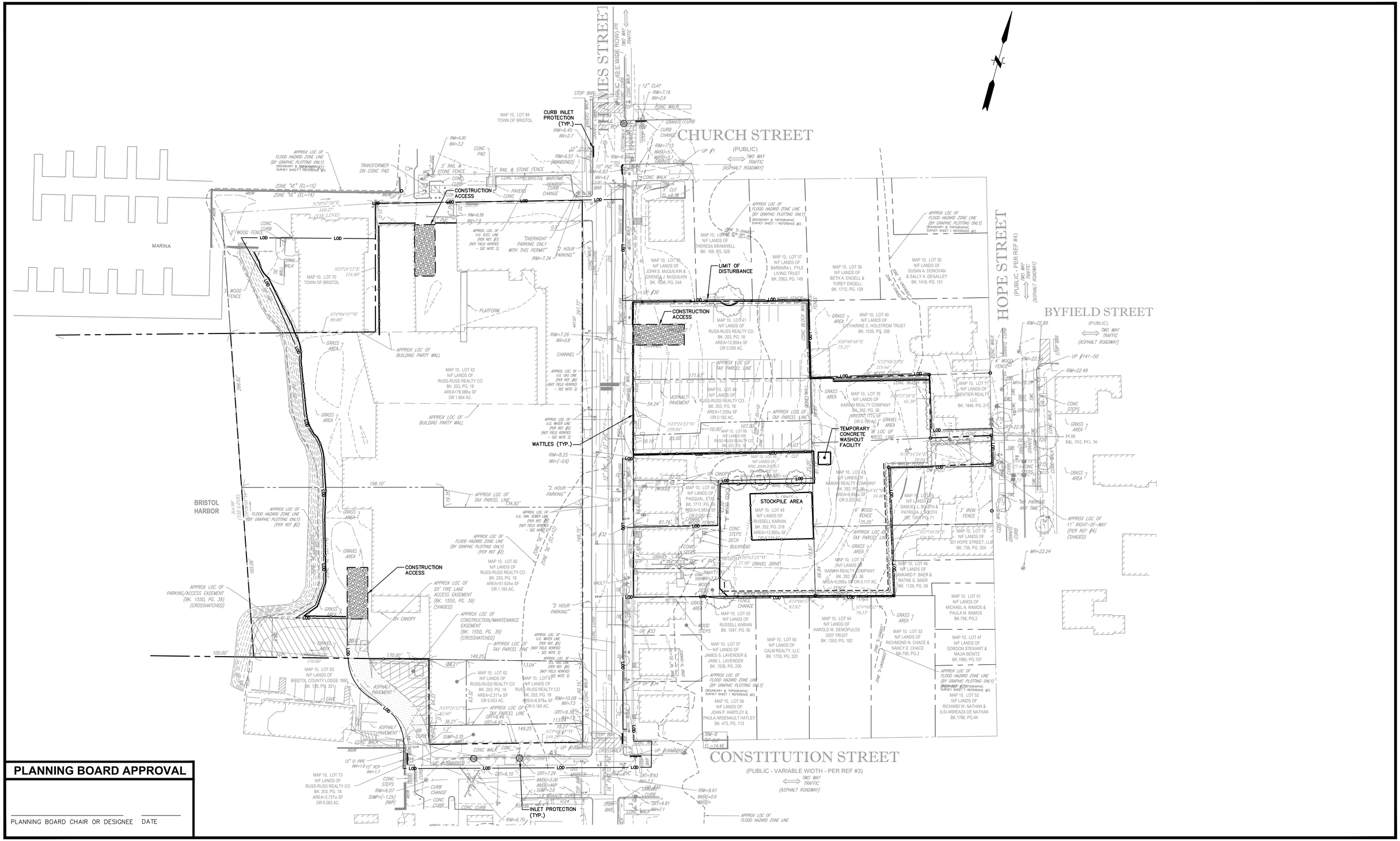

No.	DATE	DESCRIPTION	DESIGNER	REVIEWER

SEAL
SHAWN M. MARTIN
No. 7487
REGISTERED PROFESSIONAL ENGINEER (CIVIL)
12/9/22

SEAL

SCALE:
HORZ.: 1"= 40'
VERT.:
DATUM:
HORZ.:NAD 1983
VERT.: NAD 1988
40 20 0 40
GRAPHIC SCALE

FUSS & O'NEILL
317 IRON HORSE WAY, SUITE 204
PROVIDENCE, RI 02908
401.861.3070
www.fando.com

BRADY SULLIVAN PROPERTIES, LLC

SOIL EROSION AND SEDIMENTATION CONTROL PLAN

BRISTOL YARN MILL

125 THAMES STREET BRISTOL, RHODE ISLAND

PROJ. No.: 20061150.A22
DATE: NOVEMBER 29, 2022

CE-101

SHEET 7 OF 26

File Path: \\private\DFS\CadProj\DWG\P2006\1150\A22\Civil\Plan\Permitting Plans\20061150A22_EROD1.dwg Layout: CE-101 Plotted: Tue, December 06, 2022 - 1:19 PM User: ajohnson
Plotter: AUTOCAD PDF (GENERAL DOCUMENTATION).PC3 CTB File: FO.STB
LAYER STATE:
MS VIEW:

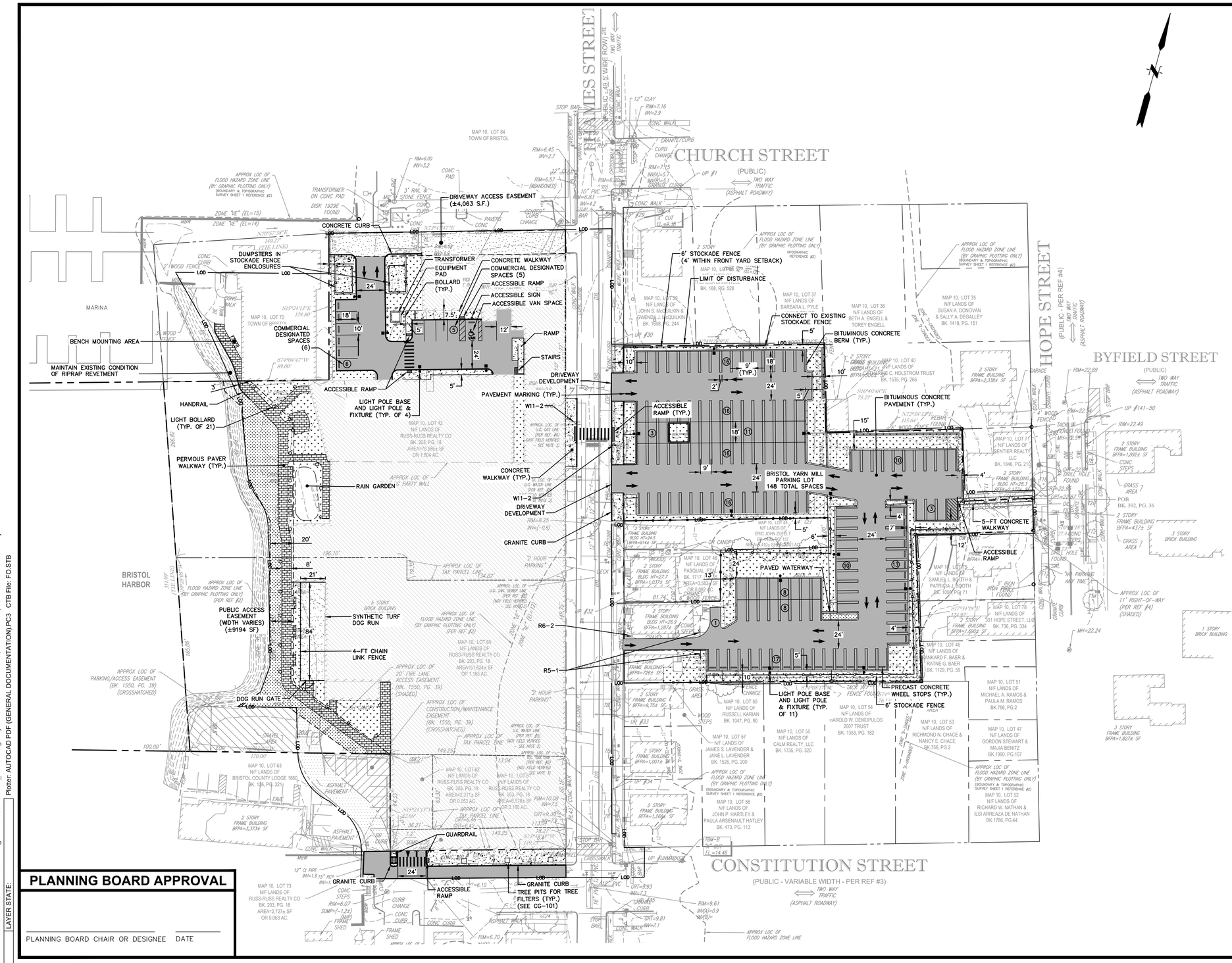

ZONING DIMENSION TABLE

CRITERIA	REQUIRED PER ZONING DISTRICT W	D	WPUD	PROPOSED (BUILDING SITE – LOTS 42,60,61,62,73)
MINIMUM LOT AREA	5,000 SF			142,226± SF (3.265 AC)
MINIMUM LOT AREA PER DWELLING UNIT	4,000 SF	2,500 SF	N/A	N/A
MINIMUM FRONTAGE	50'			149.25' CONSTITUTION STREET (MIN.)
MIMIMUM LOT WIDTH	50'			149.25' CONSTITUTION STREET (MIN.)
FRONT SETBACK	0'			–0.90'
SIDE SETBACK	0'			0.0'
REAR SETBACK	10'			30±' (TO APPROX. MEAN HIGH WATER)
MAX. BUILDING HEIGHT	35' (3 STORIES)			55' MAX.–4 STORIES (EXISTING)
MAX. LOT COVERAGE BY STRUCTURES	70%			83,153 S.F./142,226 S.F. = 58.5% (PROP.) 87,296 S.F./142,226 S.F. = 61.4% (EXIST.)
MAX. TOTAL COVERAGE	85%	95%	N/A	97,606 S.F./142,226 S.F. = 68.6%
MAX. FLOOR AREA RATIO	1.5	1.4	N/A	227,286 S.F./142,226 S.F. = 1.6±
IMPERVIOUS COVER	PARKING LOT SITE			51,237 S.F./66,327 S.F. = 77.2%

NOTES:
1. MILL BUILDING PROPERTIES COMBINED AREA IS APPROXIMATELY 142,226 SQUARE FEET.
2. TOTAL LAND AREA INCLUDED IN REDEVELOPMENT IS APPROXIMATELY 227,286 SQUARE FEET.
3. THE BRISTOL PLANNING BOARD APPROVED 127 RESIDENTIAL UNITS AND 6,300 SQUARE FEET OF COMMERCIAL SPACE IN THE MASTER PLAN FOR THE PROJECT, WITH CONDITIONS, ON MAY 12, 2022 (BRISTOL LAND EVIDENCE BOOK 2172 PAGE 297). THE BRISTOL TOWN COUNCIL SUBSEQUENTLY APPROVED A ZONING MODIFICATIONS AND ZONE MAP CHANGE FOR THE PROJECT ON AUGUST 3, 2022 (BRISTOL LAND EVIDENCE BOOK 2183 PAGE 272) THAT ADOPTED THE PLANNING BOARD'S DECISION WITH CHANGES TO THE PROVISION OF AFFORDABLE HOUSING.

PARKING SUMMARY

	USE	REQUIRED	PROPOSED
RESIDENTIAL PARKING SPACES (ON–SITE)		127	137
RESIDENTIAL PARKING SPACES (OFF–SITE)		0	145
COMMERCIAL PARKING SPACES (ON–SITE)		11	11
317 HOPE STREET (LOT 71) – ZONE D	RES/COMM	0	0
325 HOPE STREET (LOT 43) – ZONE D	COMM	0	0
60 THAMES STREET (LOT 50) – ZONE W	SF RES	1	1
70 THAMES STREET (LOT 49) – ZONE W	MF RES	2	2
TOTAL PARKING SPACES:		141	296

RESIDENTIAL PARKING REQUIREMENT: 1 SPACE/D.U. (127 RESIDENTIAL W AND REHAB LDP ZONES)

COMMERCIAL PARKING REQUIREMENT: 1 SPACE/600 S.F. GFA (0 SPACES REQ'D FOR RESIDENTIAL, OFFICE, SERVICE, RETAIL, OR INSTITUTIONS WITHIN D ZONE) (6,292 S.F. / 600 S.F. = 11 SPACES

LOADING SPACE REQUIREMENT: 1 SPACE/3,000–19,999 S.F. OF GFA (6,292 S.F. = 1 SPACE

NOTES:
1. PARKING AND LOADING REQUIREMENTS SHALL COMPLY WITH ARTICLE VIII SEC. 28–251.
2. ON–STREET PARKING ON THAMES STREET IS NOT INCLUDED IN THE CALCULATIONS.
3. THERE ARE 42 TOTAL COMPACT VEHICLE PARKING SPACES, 9 DESIGNATED MOTORCYCLE SPACES AND 24 BICYCLE SPACES WITHIN THE BASEMENT LEVEL OF 125 THAMES STREET. COMPACT PARKING SPACES ACCOUNTS FOR 14.2% OF TOTAL PARKING COUNT. MOTORCYCLE AND BICYCLE PARKING IS NOT INCLUDED IN THE CALCULATIONS.

RELIEF APPROVED AT MASTER PLAN AND BY TOWN COUNCIL:

1. ARTICLE IX SEC. 28–284(d)(1): REQUIRED TO USE AT LEAST 25 PERCENT OF THE SITE FOR COMMERCIAL, INSTITUTIONAL, AND/OR PUBLIC USE. APPROVED 6,300 SQUARE FEET IN LIEU OF REQUIRED 22,000 SQUARE FEET.
2. ARTICLE VII SEC. 28–251(2)(a): OFF–STREET PARKING SPACE DIMENSIONS MUST BE 10 FEET WIDE BY 18 FEET LONG. APPROVED 9 FEET WIDE SPACES.
3. ARTICLE IX SEC. 28–284(d)(2): RESIDENTIAL DENSITY FOR HISTORICAL BUILDINGS GREATER THAN 100,000 SQUARE FEET IN THE W ZONE. CONTRIBUTING BUILDING ON THE NATIONAL HISTORICAL REGISTER LOCATED WITHIN THE W ZONE THAT ARE IN EXCESS OF 100,000 SQUARE FEET OF GROSS FLOOR AREA SHALL HAVE NO MINIMUM GFA/DU (GROSS FLOOR AREA PER DWELLING UNIT), BUT THE RESIDENTIAL DENSITY SHALL BE DETERMINED BASED UPON THE ABILITY OF THE INFRASTRUCTURE (INCLUDING WATER, SEWER, OTHER UTILITIES, ROADWAY SYSTEM AND TRAFFIC HANDLING MECHANISMS), TOWN SERVICES, AND THE ENVIRONMENT TO ACCOMMODATE SUCH DENSITY. IN SUCH BUILDINGS, IN LIEU OF REQUIRED RETAIL AND RESTAURANT USES ON THE FIRST FLOOR WITHIN 50 FEET OF THE FRONT LOT LINE (SEE FOOTNOTE TO SECTION 28–82 TABLE A IN THE W ZONE), THE PLANNING BOARD MAY ALLOW THE PROVISION OF OTHERWISE ALLOWED NON–RESIDENTIAL USES IN ALTERNATE LOCATIONS WITHIN THE BUILDING, SEE SUBSECTION (4) BELOW FOR NON–RESIDENTIAL DENSITY. APPROVED FOR UP TO 127 UNITS.
4. ARTICLE IX SEC. 28–284(d)(4):NON–RESIDENTIAL DENSITY FOR HISTORICAL BUILDINGS GREATER THAN 100,000 SQUARE FEET IN THE W ZONE. CONTRIBUTING BUILDING ON THE NATIONAL HISTORICAL REGISTER LOCATED IN THE W ZONE THAT ARE IN EXCESS OF 100,00 SQUARE FEET OF GROSS FLOOR AREA SHALL HAVE NO REQUIRED MINIMUM PERCENTAGE OF NON–RESIDENTIAL (INCLUDING COMMERCIAL) USE, BUT SUCH NON–RESIDENTIAL DENSITY SHALL BE DETERMINED BASED UPON THE ABILITY OF THE INFRASTRUCTURE (INCLUDING WATER, SEWER, OTHER UTILITIES, ROADWAY SYSTEM AND TRAFFIC HANDLING MECHANISMS), TOWN SERVICES, AND THE ENVIRONMENT TO ACCOMMODATE SUCH DENSITY, ALONG WITH THE ABILITY OF THE MARKETPLACE TO ABSORB AND UTILIZE SUCH NON–RESIDENTIAL USES. APPROVED FOR 6,300 SQUARE FEET OF COMMERCIAL SPACE.
5. PER THE PROCEDURES OF SECTION 28–51, THE TOWN COUNCIL DETERMINED THAT THE DEVELOPMENT SHALL INCLUDE A MINIMUM OF 20% OF THE UNITS TO BE FOR AFFORDABLE HOUSING, WHICH WOULD EQUAL 26 UNITS. THE DEVELOPMENT WILL PROVIDE 3 OFF–SITE UNITS ON THE EAST SIDE OF THAMES STREET, WITHIN A 2–FAMILY DWELLING ON PLAT 10, LOT 49 AND 1–FAMILY DWELLING ON PLAT 10, LOT 50. THE MILL COMPLEX ON PLAT 10, LOTS 42, 60, 61, 62, AND 73, WILL INCLUDE 10 AFFORDABLE HOUSING UNITS. THE REMAINING 13 UNITS WILL BE SATISFIED BY PAYING A FEE–IN–LIEU, AT THE FEE RATE ESTABLISHED BY RHODE ISLAND HOUSING AT THE TIME OF MASTER PLAN APPROVAL BY THE PLANNING BOARD, AND PLANED IN AN AFFORDABLE HOUSING TRUST FUND.

PLANNING BOARD APPROVAL

PLANNING BOARD CHAIR OR DESIGNEE DATE

No.	DATE	DESCRIPTION	DESIGNER	REVIEWER

SEAL
SHAWN M. MARTIN
No. 7487
12/01/22
REGISTERED PROFESSIONAL ENGINEER (CIVIL)

SEAL

SCALE:
HORZ.: 1"= 40'
VERT.:
DATUM:
HORZ.:NAD 1983
VERT.: NAD 1988
40 20 0 40
GRAPHIC SCALE

FUSS & O'NEILL
317 IRON HORSE WAY, SUITE 204
PROVIDENCE, RI 02908
401.861.3070
www.fando.com

BRADY SULLIVAN PROPERTIES, LLC

SITE PLAN

BRISTOL YARN MILL

125 THAMES STREET BRISTOL, RHODE ISLAND

PROJ. No.: 20061150.A22
DATE: NOVEMBER 29, 2022

CS-101

SHEET 8 OF 26

File Path: \\private\DFS\CadProj\DW\CP2006\1150\A22\Civil\Plan\Permitting Plans\20061150A22_STP01.dwg Layout: CS-101 Plotted: Tue, December 06, 2022 - 1:19 PM User: ajohnson
MS VIEW: Plotter: AUTOCAD PDF (GENERAL DOCUMENTATION).PC3 CTB File: FO.STB
LAYER STATE:

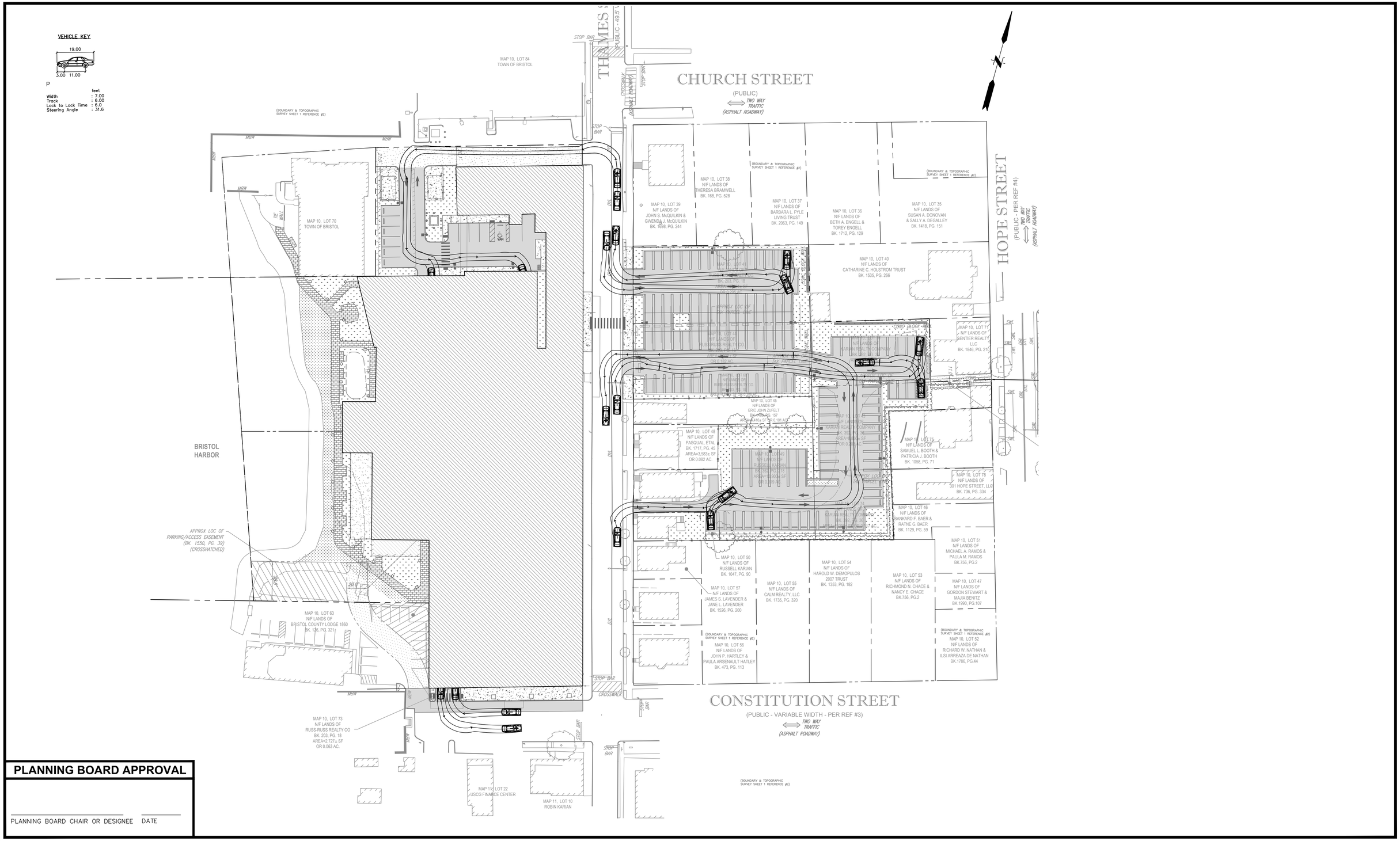

PLANNING BOARD APPROVAL

PLANNING BOARD CHAIR OR DESIGNEE DATE

No.	DATE	DESCRIPTION	DESIGNER	REVIEWER

SEAL
SHAWN M. MARTIN
No. 7487
REGISTERED PROFESSIONAL ENGINEER (CIVIL)

SEAL

SCALE:
HORZ.: 1"= 40'
VERT.:
DATUM:
HORZ.:NAD 1983
VERT.: NAD 1988
40 20 0 40
GRAPHIC SCALE

FUSS & O'NEILL
317 IRON HORSE WAY, SUITE 204
PROVIDENCE, RI 02908
401.861.3070
www.fando.com

BRADY SULLIVAN PROPERTIES, LLC

SITE CIRCULATION PLAN

BRISTOL YARN MILL

125 THAMES STREET BRISTOL, RHODE ISLAND

PROJ. No.: 20061150.A22
DATE: NOVEMBER 29, 2022

CS-102

SHEET 9 OF 26

File Path: \\private\dfs\CadProj\DWG\P2006\1150\A22\Civil\Plan\Permitting Plans\20061150A22_STP02-TURN.dwg Layout: CS-102 Plotted: Tue, December 06, 2022 - 1:20 PM User: ajohnson
Plotter: AUTOCAD PDF (GENERAL DOCUMENTATION).PC3 CTB File: FO.STB
LAYER STATE:
MS VIEW:

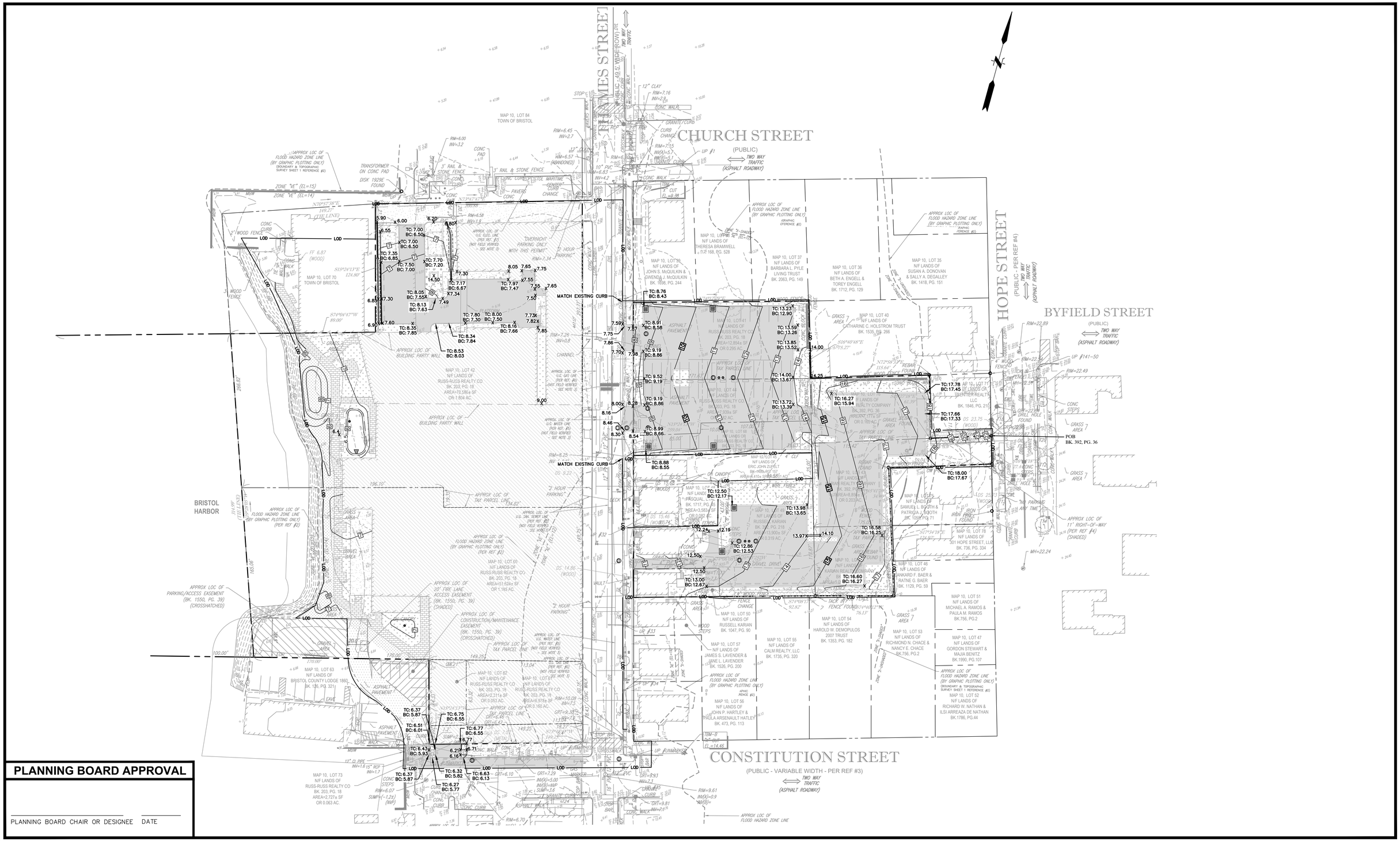

PLANNING BOARD APPROVAL

PLANNING BOARD CHAIR OR DESIGNEE DATE

File Path: \\private\DFS\CadProj\DW\CP2006\1150\A22\Civil\Plan\Permitting Plans\20061150A22_GRA01.dwg Layout: CG-101 Plotted: Tue, December 06, 2022 - 1:21 PM User: ajohnson
Plotter: AUTOCAD PDF (GENERAL DOCUMENTATION).PC3 CTB File: FO.STB
LAYER STATE:
MS VIEW:

No.	DATE	DESCRIPTION	DESIGNER	REVIEWER

SEAL
SHAWN M. MARTIN
No. 7487
12/6/22
REGISTERED PROFESSIONAL ENGINEER (CIVIL)

SEAL

SCALE:
HORZ.: 1"= 40'
VERT.:
DATUM:
HORZ.:NAD 1983
VERT.: NAD 1988
40 20 0 40
GRAPHIC SCALE

FUSS & O'NEILL
317 IRON HORSE WAY, SUITE 204
PROVIDENCE, RI 02908
401.861.3070
www.fando.com

BRADY SULLIVAN PROPERTIES, LLC

GRADING PLAN

BRISTOL YARN MILL

125 THAMES STREET BRISTOL, RHODE ISLAND

PROJ. No.: 20061150.A22
DATE: NOVEMBER 29, 2022

CG-101

SHEET 10 OF 26

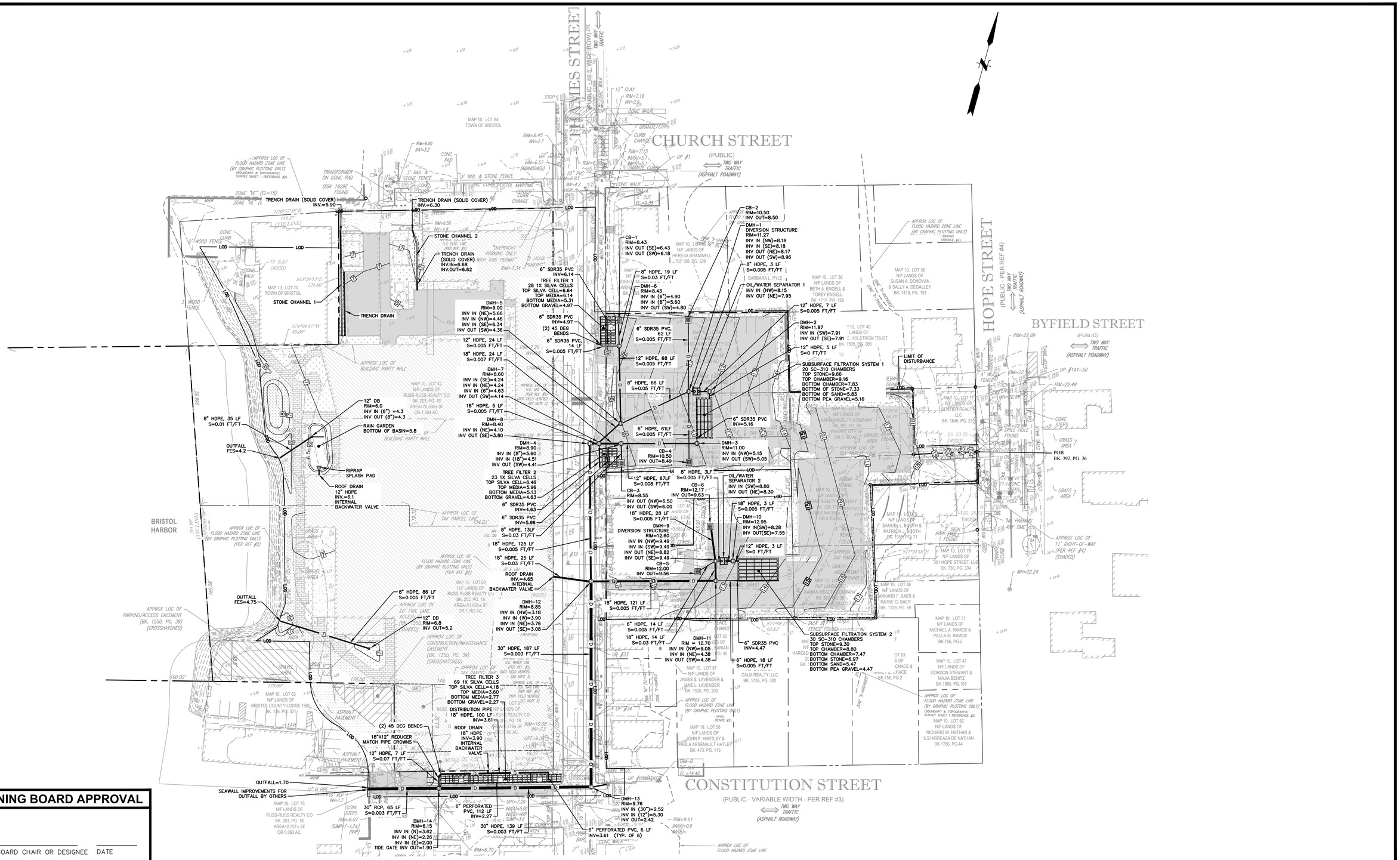

PLANNING BOARD APPROVAL

PLANNING BOARD CHAIR OR DESIGNEE DATE

No.	DATE	DESCRIPTION	DESIGNER	REVIEWER

SEAL
SHAWN M. MARTIN
No. 7487
REGISTERED PROFESSIONAL ENGINEER (CIVIL)

SEAL

SCALE:
HORZ.: 1"= 40'
VERT.:
DATUM:
HORZ.:NAD 1983
VERT.: NAD 1988
40 20 0 40
GRAPHIC SCALE

FUSS & O'NEILL
317 IRON HORSE WAY, SUITE 204
PROVIDENCE, RI 02908
401.861.3070
www.fando.com

BRADY SULLIVAN PROPERTIES, LLC

DRAINAGE PLAN

BRISTOL YARN MILL

125 THAMES STREET BRISTOL, RHODE ISLAND

PROJ. No.: 20061150.A22
DATE: NOVEMBER 29, 2022

CG-102

SHEET 11 OF 26

File Path: \\private\DFS\CadProj\DWG\P2006\11150\A22\Civil\Plan\Permitting Plans\20061150A22_GRA01.dwg Layout: CG-102 Plotted: Tue, December 06, 2022 - 1:21 PM User: ajohnson
Plotter: AUTOCAD PDF (GENERAL DOCUMENTATION).PC3 CTB File: FO.STB
MS VIEW:
LAYER STATE:

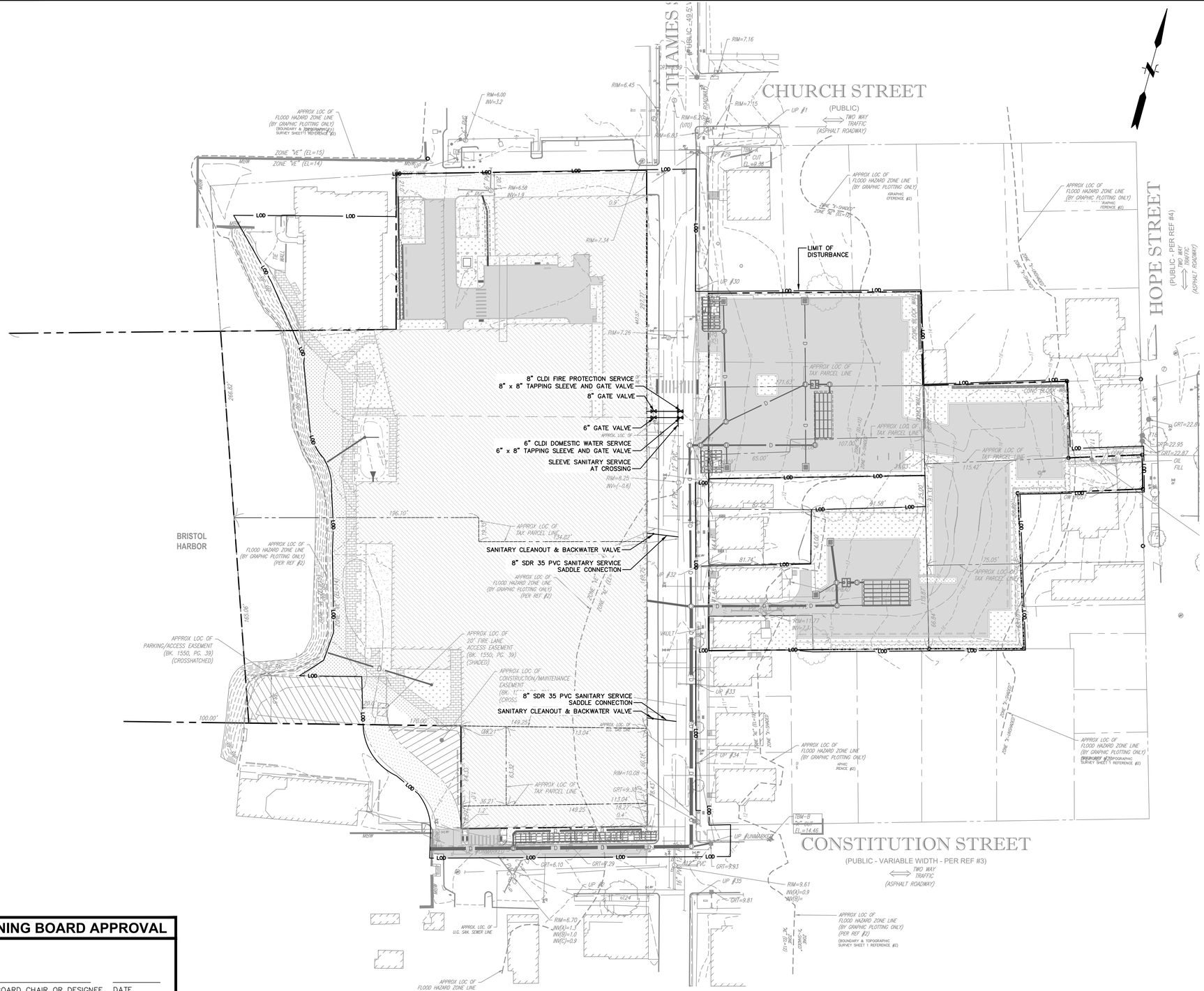

PLANNING BOARD APPROVAL

PLANNING BOARD CHAIR OR DESIGNEE DATE

No.	DATE	DESCRIPTION	DESIGNER	REVIEWER

SEAL
SHAWN M. MARTIN
No. 7487
REGISTERED PROFESSIONAL ENGINEER (CIVIL)

SEAL

SCALE:
HORZ.: 1"= 40'
VERT.:
DATUM:
HORZ.:NAD 1983
VERT.: NAD 1988
40 20 0 40
GRAPHIC SCALE

FUSS & O'NEILL
317 IRON HORSE WAY, SUITE 204
PROVIDENCE, RI 02908
401.861.3070
www.fando.com

BRADY SULLIVAN PROPERTIES, LLC

WATER AND SEWER PLAN

BRISTOL YARN MILL

125 THAMES STREET BRISTOL, RHODE ISLAND

PROJ. No.: 20061150.A22
DATE: NOVEMBER 29, 2022

CU-101

SHEET 12 OF 26

File Path: \\private\DFS\CadProj\DWG\P20061150\A22\Civil\Plan\Permitting Plans\20061150A22_UTL01.dwg Layout: CU-101 Plotted: Tue, December 06, 2022 - 1:21 PM User: ajohnson
Plotter: AUTOCAD PDF (GENERAL DOCUMENTATION).PC3 CTB File: FO.STB
LAYER STATE:
MS VIEW:

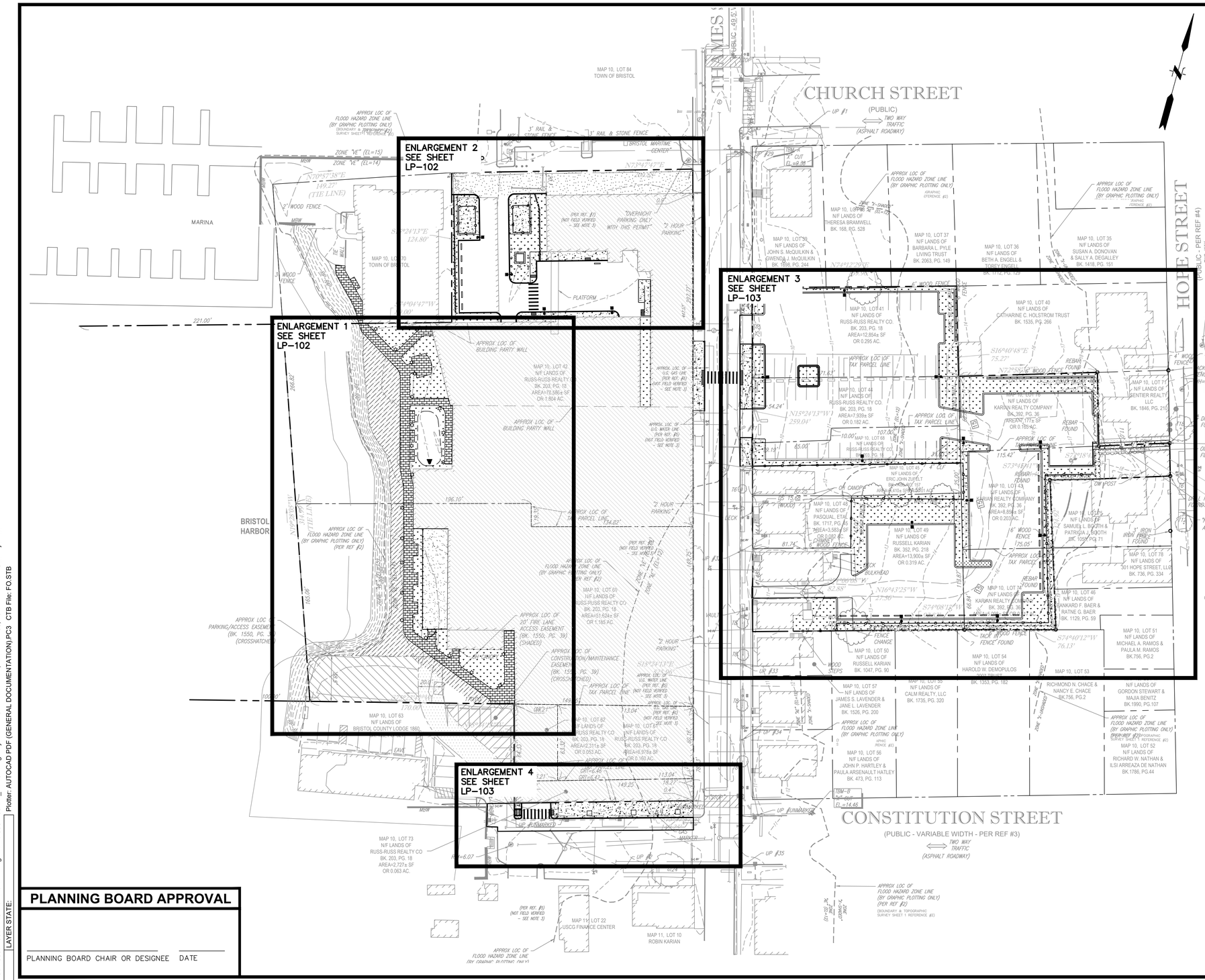

PLANTING NOTES

1. CONTRACTOR SHALL SURVEY, LOCATE, AND PROTECT ALL TREES WITHIN AREAS SHOWN AS "EXISTING VEGETATION TO REMAIN" WITHIN THE DEVELOPMENT ENVELOPE FOR REVIEW BY L.A. PRIOR TO CLEARING OPERATIONS.
2. ALL PLANTING MATERIAL TO BE NURSERY GROWN STOCK SUBJECT TO A.A.N. STANDARDS. TREES SHALL BE TAGGED AND SUBMITTED TO L.A. THROUGH PHOTO SUBMISSION OR FIELD VISIT FOR SELECTION APPROVAL. TREES SHALL BE FIELD DUG.
3. THE CONTRACTOR SHALL SUPPLY ALL PLANTS IN QUANTITIES SUFFICIENT TO COMPLETE THE WORK SHOWN ON THE DRAWINGS AND LISTED IN THE PLANT LIST. IN THE EVENT OF A DISCREPANCY BETWEEN QUANTITIES SHOWN IN THE PLANT LIST AND THOSE REQUIRED BY THE DRAWINGS, THE LARGER NUMBER SHALL APPLY.
4. PRECISE LOCATION OF ITEMS NOT DIMENSIONED ON THE PLAN ARE TO BE FIELD STAKED BY THE CONTRACTOR AND SHALL BE SUBJECT TO THE REQUIREMENTS SPECIFIED IN THE PREVIOUS NOTE.
5. ALL SHRUB MASSINGS AND TREE PITS SHALL BE MULCHED TO A DEPTH OF 3" WITH SHREDDED PINE BARK MULCH.
6. TREES SHALL NOT BE STAKED UNLESS OTHERWISE NOTED.
7. THE CONTRACTOR IS RESPONSIBLE FOR ANY DAMAGED VEGETATION AND SHALL REPLACE OR REPAIR ANY DAMAGED MATERIAL, AT HIS OWN EXPENSE.
8. ALL SHRUB AND GROUNDCOVER PLANTING AREAS SHALL HAVE CONTINUOUS BEDS OF TOPSOIL 12" DEEP. ALL SOD AND HYDROSEED AREAS SHALL HAVE A MINIMUM TOPSOIL BED OF 6".
9. THE CONTRACTOR IS RESPONSIBLE FOR LOCATING ALL UTILITIES IN THE FIELD. WHERE PLANT MATERIAL MAY INTERFERE WITH UTILITIES, THE CONTRACTOR SHALL NOTIFY THE LANDSCAPE ARCHITECT TO COORDINATE THEIR INSTALLATION.
10. A SOIL CAP IS REQUIRED FOR ANY LANDSCAPED AREAS ON THE MILL LOT SITE INCLUDING PLAT 10, LOTS 42, 60, 61, 62, AND 73.
11. FOR PLANTING SOIL MIX, SEE SPECIFICATIONS OR PLANTING DETAILS.
12. ALL EXISTING RILL, GULLY OR CHANNEL EROSION SHALL BE FILLED WITH APPROPRIATE BACKFILL MATERIAL, FINE RAKED, SCARIFIED AND STABILIZED WITH APPROPRIATE VEGETATIVE MATERIAL AND/OR APPROPRIATE SEDIMENTATION AND EROSION CONTROL MEASURES.
13. ADJUSTMENTS IN THE LOCATION OF THE PROPOSED PLANT MATERIAL AS A RESULT OF EXISTING VEGETATION TO REMAIN SHALL BE APPROVED BY THE LANDSCAPE ARCHITECT PRIOR TO INSTALLATION.
14. THE CONTRACTOR IS RESPONSIBLE FOR ALL MAINTENANCE REPAIR AND REPLACEMENT OF PLANT MATERIAL, AS REQUIRED, FOR THE DURATION OF THE PROJECT AND SUBSEQUENT WARRANTY PERIOD.
15. PLANTINGS INSTALLED IN THE DRY SUMMER MONTHS AND/OR LAWN SEEDED OUT OF SPRING OR FALL PERIODS, IF ALLOWED BY OWNER, WILL REQUIRE AGGRESSIVE IRRIGATION PROGRAMS AT THE CONTRACTOR'S EXPENSE, UNLESS OTHERWISE DIRECTED BY THE OWNER.
16. UPON COMPLETION OF PLANTING, REMOVE FROM SITE ALL EXCESS SOIL, MULCH, AND MATERIALS AND DEBRIS RESULTING FROM WORK OPERATIONS. CLEAN UP SHOULD BE COMPLETED AT THE END OF EACH WORKING DAY. RESTORE TO ORIGINAL CONDITIONS ALL DAMAGED PAVEMENTS, PLANTING AREAS, STRUCTURES AND LAWN AREAS RESULTING FROM LANDSCAPING OPERATIONS.
17. CONTRACTOR TO RESEED ALL DISTURBED AREAS.

LEGEND

- LAWN SEED MIX
- BUFFER RESTORATION SEED MIX
- BUILDING

PLANNING BOARD APPROVAL

PLANNING BOARD CHAIR OR DESIGNEE DATE

No.	DATE	DESCRIPTION	DESIGNER	REVIEWER

SEAL
SHAWN M. MARTIN
No. 7487
12/2/22
REGISTERED PROFESSIONAL ENGINEER (CIVIL)

SEAL

SCALE:
HORZ.: 1"= 40'
VERT.:
DATUM:
HORZ.:NAD 1983
VERT.: NAD 1988
40 20 0 40
GRAPHIC SCALE

FUSS & O'NEILL
317 IRON HORSE WAY, SUITE 204
PROVIDENCE, RI 02908
401.861.3070
www.fando.com

BRADY SULLIVAN PROPERTIES, LLC

PLANTING PLAN

BRISTOL YARN MILL

125 THAMES STREET BRISTOL, RHODE ISLAND

PROJ. No.: 20061150.A22
DATE: NOVEMBER 29, 2022

LP-101

SHEET 13 OF 26

File Path: \\private\DFS\CadProj\DWG\P20061150A22\Civil\Plan\Permitting Plans\20061150A22_LND01.dwg Layout: LP-101 Plotted: Tue, December 06, 2022 - 1:22 PM User: ajohnson
Plotter: AUTOCAD PDF (GENERAL DOCUMENTATION).PC3 CTB File: FO.STB
MS VIEW:
LAYER STATE:

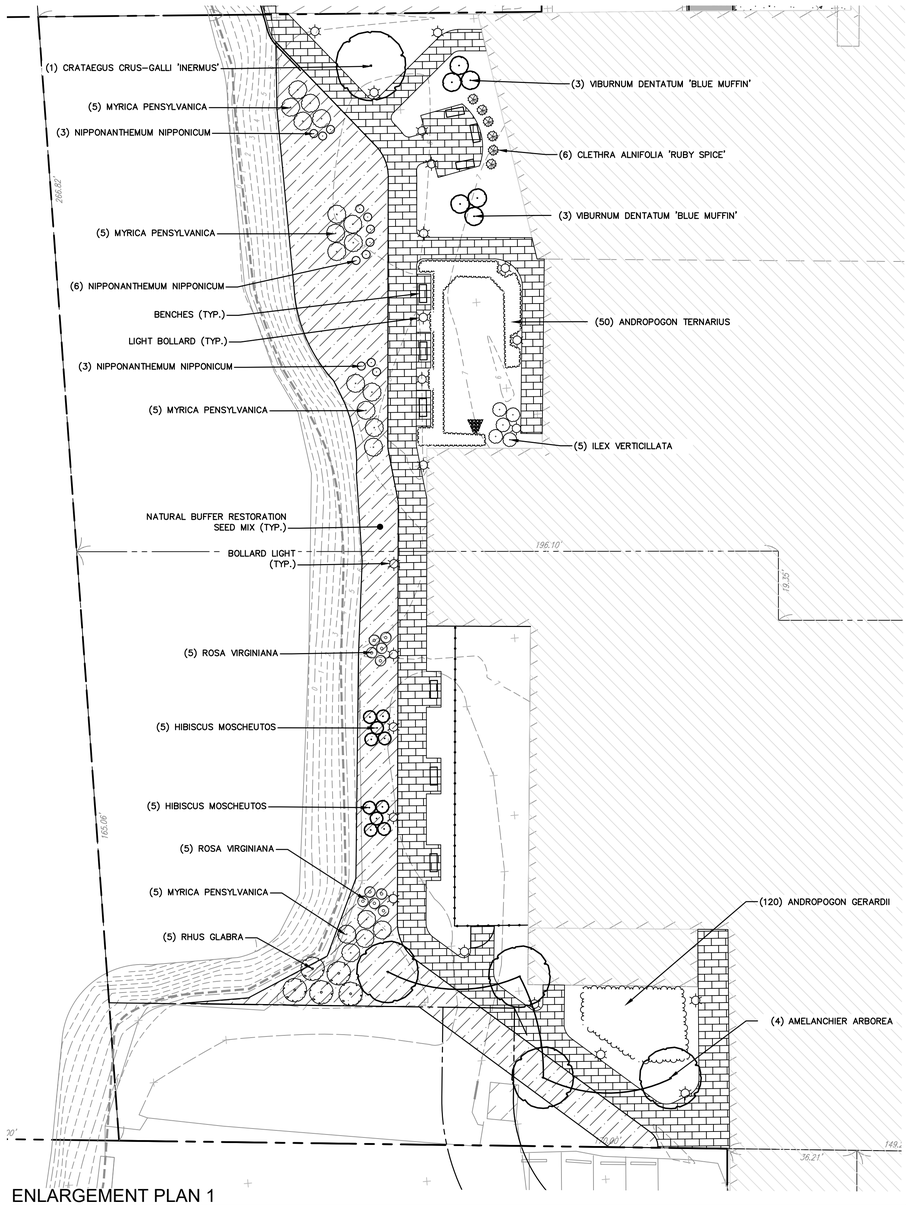

ENLARGEMENT PLAN 1

SCALE: 1" = 20'

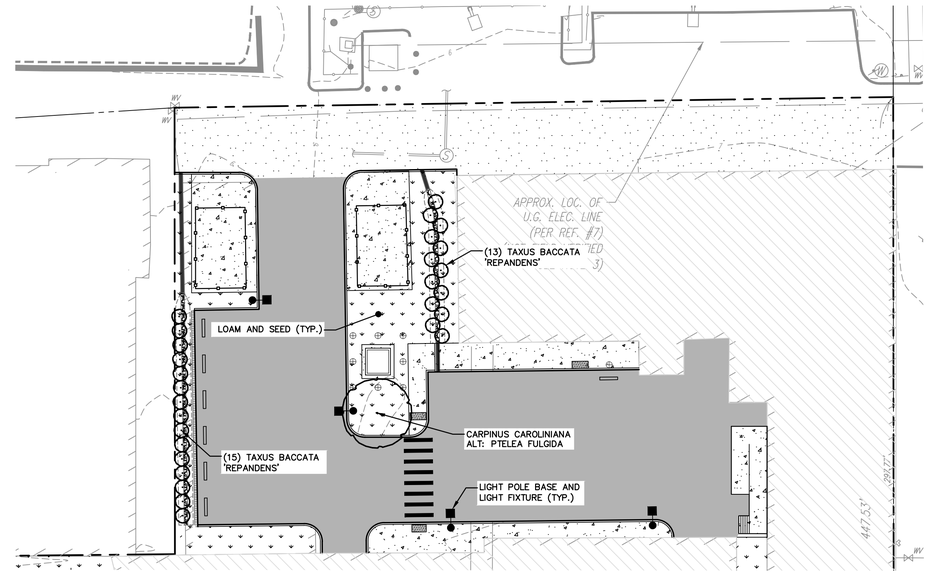

ENLARGEMENT PLAN 2

SCALE: 1" = 20'

PLANT LIST

BOTANICAL NAME	COMMON NAME	QTY.	SIZE
ENLARGEMENT 1			
TREE			
CRATAEGUS CRUS-GALLI 'INERMUS'	THORNLESS COCKSPUR HAWTHORN	1	8'-10' B&B
MAGNOLIA VIRGINIANA	SWEETBAY MAGNOLIA	1	8'-10' B&B
SHRUBS			
AMELANCHIER ARBOREA	DOWNY SERVICEBERRY	4	6-8' B&B
ROSA VIRGINIANA	VIRGINIA ROSE	10	2 GAL.
RHUS GLABRA	SMOOTH SUMAC	5	3 GAL.
NIPPONANTHEMUM NIPPONICUM	NIPPON DAISY	12	2 GAL.
ILEX VERTICILLATA	WINTERBERRY	5	3 GAL.
MYRICA PENSYLVANICA	BAYBERRY	20	MIXED
CLETHRA ALNIFOLIA 'RUBY SPICE'	SWEET PEPPERBUSH	6	3 GAL.
VIBURNUM DENTATUM 'BLUE MUFFIN'	ARROWWOOD VIBURNUM	6	3'-4' B&B
PERENNIALS/GRASSES			
ANDROPOGON GERARDII	BIG BLUESTEM	120	2 GAL.
ANDROPOGON TERNARIUS	SPLITBEARD BLUESTEM	50	2 GAL.
HIBISCUS MOSCHEUTOS VAR.	SWAMP ROSA MALLOW	10	3 GAL.
ENLARGEMENT 2			
TREES			
CARPINUS CAROLINIANA	AMERICAN HORNBEAM	1	10'-12' B&B
SHRUBS			
TAXUS BACCATA 'REPANDENS'	SPREADING ENGLISH YEW	28	1 GAL.

NOTES:
1. ALL PLANTS TO BE LAID OUT IN FIELD AND PLACEMENT TO BE APPROVED PRIOR TO FINAL INSTALLATION BY L.A. AND OWNER.
2. INFILL ALL THE AREAS BETWEEN THE PLANTS ON THE WEST SIDE OF THE PUBLIC ACCESS WALKWAY WITH NATURAL BUFFER RESTORATION SEED MIX OR APPROVED EQUAL.
   2.1. SEEDING RATE: 35 POUNDS PER ACRE
   2.2. MOW ONCE ANNUALLY AFTER OCTOBER 1 OR PRIOR TO APRIL 15
   2.3. SEED MIX INCLUDES: COMMON EASTERN WILD-RYE (ELYMUS VIRGINICUS), CREEPING RED FESCUE (FESTUCA RUBRA), BIG BLUE-STEM (ANDROPROGON GERORDII), LITTLE BLUESTEM (SCHIZACHYRIUM SCOPARIUM), INDIAN GRASS (SORGHASTRUM NUTANS), SWITCH GRASS (PANICUM VIRGATUM), SAND DROPSEED (SPOROBOLUS CRYPTANDRUS), SMOOTH CORDGRASS (SPARTINA ALTERNIFLORA)

PLANNING BOARD APPROVAL

PLANNING BOARD CHAIR OR DESIGNEE DATE

No.	DATE	DESCRIPTION	DESIGNER	REVIEWER

SEAL
SHAWN M. MARTIN
No. 7487
REGISTERED PROFESSIONAL ENGINEER (CIVIL)

SEAL

SCALE: HORZ.: 1"= 40' VERT.:
DATUM: HORZ.:NAD 1983 VERT.: NAD 1988
40 20 0 40
GRAPHIC SCALE

FUSS & O'NEILL
317 IRON HORSE WAY, SUITE 204
PROVIDENCE, RI 02908
401.861.3070
www.fando.com

BRADY SULLIVAN PROPERTIES, LLC

ENLARGEMENT PLANTING PLAN

BRISTOL YARN MILL

125 THAMES STREET BRISTOL, RHODE ISLAND

PROJ. No.: 20061150.A22
DATE: NOVEMBER 29, 2022

LP-102

SHEET 14 OF 26

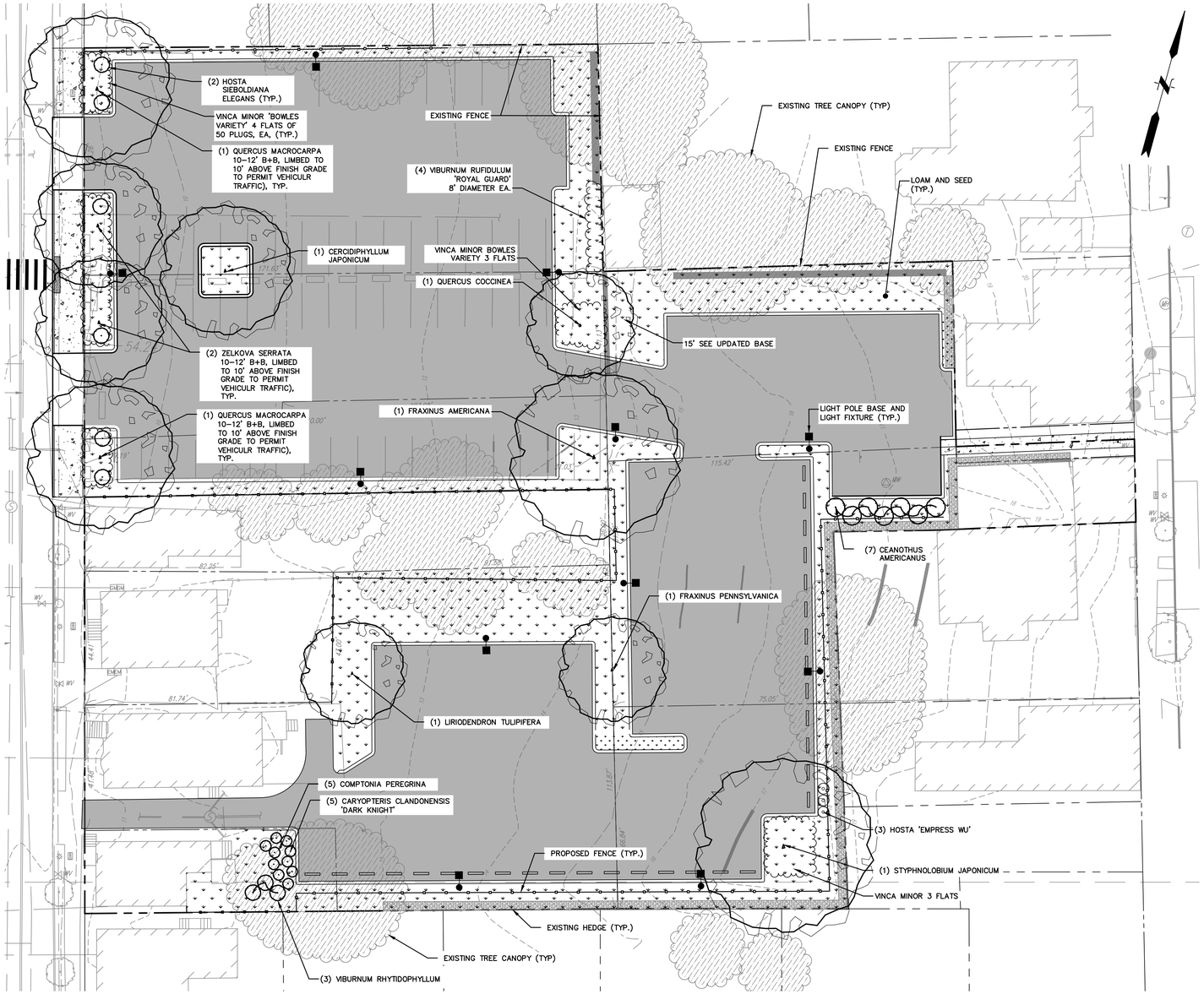

ENLARGEMENT PLAN 3

SCALE: 1" = 20'

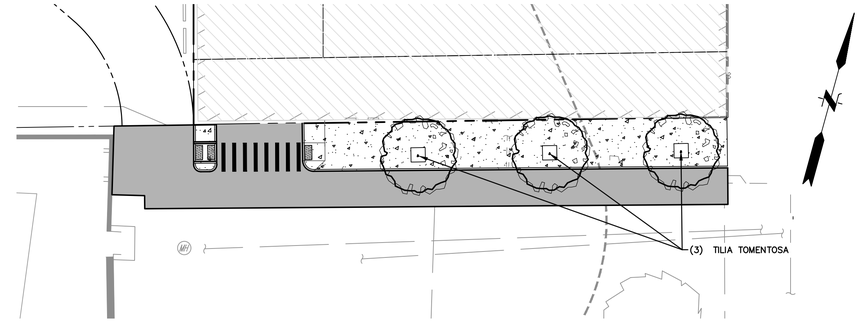

ENLARGEMENT PLAN 4

SCALE: 1" = 20'

PLANT LIST

BOTANICAL NAME	COMMON NAME	QTY.	SIZE
ENLARGEMENT 3			
TREES			
ZELKOVA SERRATA	JAPANESE ZELKOVA	2	10'–12' B&B
QUERCUS COCCINEA	SCARLET OAK	1	12'–14' B&B
FRAXINUS AMERICANA	WHITE ASH	1	12'–14' B&B
FRAXINUS PENNSYLVANICA	GREEN ASH	1	12'–14' B&B
TILIA CORDATA	LITTLELEAF LINDEN	1	10'–12' B&B
STYPHNOLOBIUM JAPONICUM	JAPANESE PAGODA TREE	1	12'–14' B&B
CERCIDIPHYLLUM JAPONICUM	KATSURA TREE	1	10'–12' B&B
LIRIODENDRON TULIPIFERA	TULIP TREE	1	10'–12' B&B
QUERCUS MACROCARPA	BUR OAK	2	10'–12' B&B
SHRUBS			
HOSTA SIEBOLDIANA 'ELEGANS'	PLANTAIN LILY	12	2 GAL.
VIBURNUM RUFIDULUM 'ROYAL GUARD'	RUSTY BLACKHAW VIBURNUM	4	3'–4' B&B
VIBURNUM RHYTIDOPHYLLUM	LEATHERLEAF VIBURNUM	3	3'–4' B&B
CEANOTHUS AMERICANUS	NEW JERSEY TEA	7	2 GAL.
CARYOPTERIS CLANDONENSIS DARK KNIGHT	BLUEBEARD	5	3 GAL.
PERENNIALS/GRASSES			
COMPTONIA PEREGRINA	SWEET–FERN	5	2 GAL.
VINCA MINOR BOWLES VARIETY	LESSER PERIWINKLE	900	18 FLATS
HOSTA 'EMPRESS WU'	PLANTAIN LILY	3	2 GAL.
ENLARGEMENT 4			
TREES			
SILVER LINDEN	TILIA TOMENTOSA	3	10'–12' B&B

NOTE:
ALL PLANTS TO BE LAID OUT IN FIELD AND PLACEMENT TO BE APPROVED PRIOR TO FINAL INSTALLATION BY L.A. AND OWNER.

PLANNING BOARD APPROVAL

PLANNING BOARD CHAIR OR DESIGNEE DATE

No.	DATE	DESCRIPTION	DESIGNER	REVIEWER

SEAL
SHAWN M. MARTIN
No. 7487
REGISTERED PROFESSIONAL ENGINEER (CIVIL)

SEAL

SCALE:
HORZ.: 1"= 40'
VERT.:
DATUM:
HORZ.:NAD 1983
VERT.: NAD 1988
40 20 0 40
GRAPHIC SCALE

FUSS & O'NEILL
317 IRON HORSE WAY, SUITE 204
PROVIDENCE, RI 02908
401.861.3070
www.fando.com

BRADY SULLIVAN PROPERTIES, LLC

ENLARGEMENT PLANTING PLAN

BRISTOL YARN MILL

125 THAMES STREET BRISTOL, RHODE ISLAND

PROJ. No.: 20061150.A22
DATE: NOVEMBER 29, 2022

LP-103

SHEET 15 OF 26

File Path: \\private\dfs\CadProj\DWG\P2006\1150\A22\Civil\Plan\Permitting Plans\20061150A22_LND01.dwg Layout: LP-103 Plotted: Tue, December 06, 2022 - 1:23 PM User: ajohnson
Plotter: AUTOCAD PDF (GENERAL DOCUMENTATION).PC3 CTB File: FO.STB
LAYER STATE:
MS VIEW:

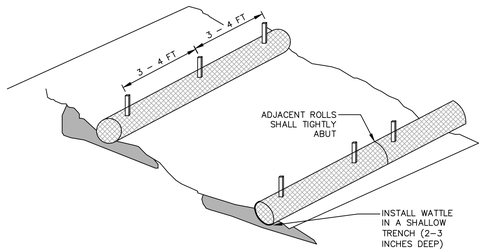

TYPICAL WATTLE INSTALLATION GUIDE

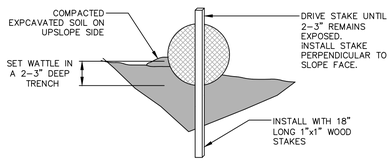

ENTRENCHMENT

NOTES:

1. WATTLES SHALL BE TRENCHED APPROXIMATE 2-3 INCHES AND STAKED SUCH THAT WATTLES DIRECTLY CONTACT SOIL AND PRECLUDE UNDERMINING OR BLOWOUTS. THE TRENCH SHALL BE APPROXIMATELY 9 INCHES WIDE. STAKES SHALL BE DRIVEN THROUGH THE CENTER OF THE WATTLE AT A SPACING OF 3-4 FEET ON CENTER AND NO GREATER THAN 6"FROM THE EACH END OF THE WATTLE. STAKES SHALL BE 1-INCH BY 1-INCH WOODEN STAKES WITH A LENGTH OF 18 INCHES. COMPACT SOIL EXCAVATED TO CREATE TRENCH ON UPHILL SIDE SIDE.
2. ENDS OF ADJACENT WATTLES SHALL BE TIGHTLY BUTTED OR OVERLAPPED SO THAT NO OPENING EXISTS FOR WATER TO PASS THROUGH. WATTLES SHALL BE FREE OF DAMAGE OR DEFECTS WHEN DELIVERED TO THE SHIPPER. NO VEHICLES SHALL BE DRIVEN OVER WATTLES.
3. WATTLES SHALL BE 12-INCH SEDIMAX-FR™ FILTRATION ROLL MANUFACTURED BY NORTH AMERICAN GREEN, OR APPROVED EQUAL.

WATTLES
NOT TO SCALE

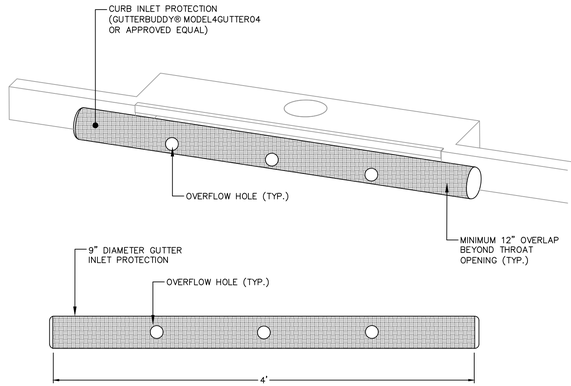

CURB INLET PROTECTION
NOT TO SCALE

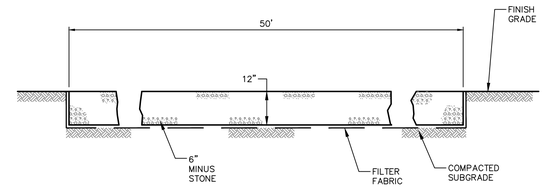

SECTION

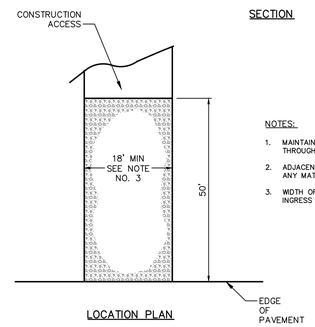

LOCATION PLAN

NOTES:

1. MAINTAIN ANTI-TRACKING APRON IN GOOD CONDITION THROUGHOUT CONSTRUCTION PERIOD.
2. ADJACENT ROADWAY SHALL BE SWEPT DAILY TO REMOVE ANY MATERIAL THAT MAY BE TRACKED ONTO PAVEMENT.
3. WIDTH OF APRON SHALL NOT BE LESS THAN WIDTH OF INGRESS OR EGRESS.

CONSTRUCTION ACCESS
NOT TO SCALE

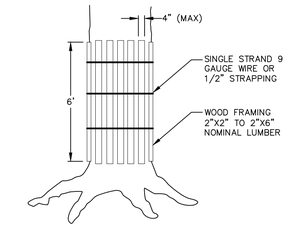

NOTE:

SHALL BE IN ACCORDANCE WITH SECTION L.11 OF THE STANDARD SPECIFICATIONS.

INDIVIDUAL TREE

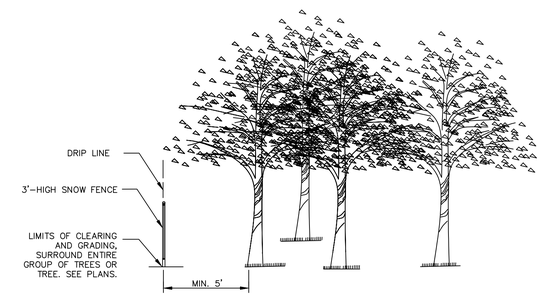

GROUPING OF TREES

TREE PROTECTION
NOT TO SCALE

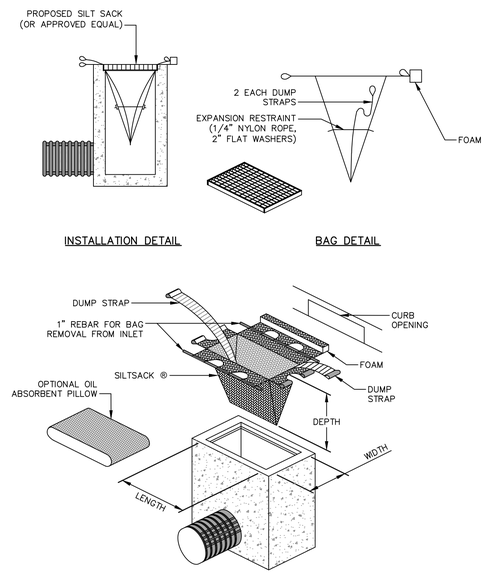

INSTALLATION DETAIL

BAG DETAIL

CATCH BASIN INLET PROTECTION
NOT TO SCALE

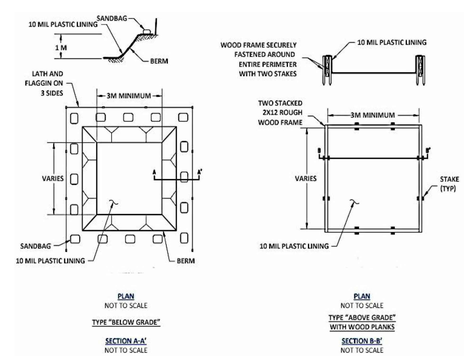

PLAN
NOT TO SCALE
TYPE "BELOW GRADE"
SECTION A-A'
NOT TO SCALE

PLAN
NOT TO SCALE
TYPE "ABOVE GRADE" WITH WOOD PLANKS
SECTION B-B'
NOT TO SCALE

NOTES:

1. ACTUAL LAYOUT DETERMINED IN THE FIELD.
2. FOR REFERENCE PURPOSES ONLY. NOT FOR CONSTRUCTION PURPOSES.

REFERENCE:

RHODE ISLAND SOIL EROSION AND SEDIMENT CONTROL HANDBOOK, ISSUED 1989 (REVISED 2014)

TEMPORARY CONCRETE WASHOUT FACILITY
NOT TO SCALE

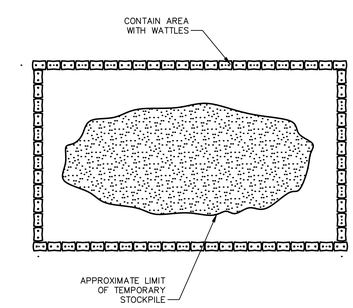

TEMPORARY SOIL STOCKPILE
NOT TO SCALE

PLANNING BOARD APPROVAL

PLANNING BOARD CHAIR OR DESIGNEE DATE

No.	DATE	DESCRIPTION	DESIGNER	REVIEWER

SEAL
SHAWN M. MARTIN
No. 7487
REGISTERED PROFESSIONAL ENGINEER (CIVIL)

SEAL

SCALE:
HORZ.: AS NOTED
VERT.:
DATUM:
HORZ.:
VERT.:
0
GRAPHIC SCALE

FUSS & O'NEILL
317 IRON HORSE WAY, SUITE 204
PROVIDENCE, RI 02908
401.861.3070
www.fando.com

BRADY SULLIVAN PROPERTIES, LLC

CIVIL DETAILS

BRISTOL YARN MILL

125 THAMES STREET BRISTOL, RHODE ISLAND

PROJ. No.: 20061150.A22
DATE: NOVEMBER 29, 2022

CD-501

SHEET 16 OF 26

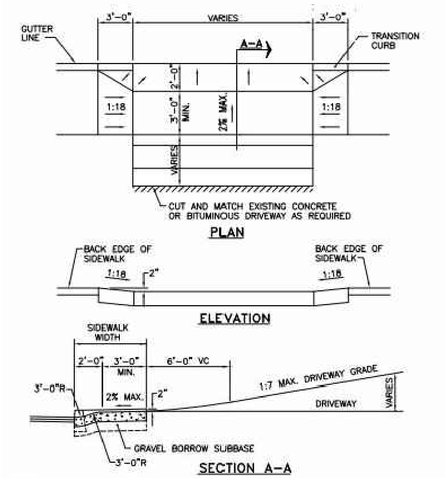

NOTES:
1. SHALL BE IN ACCORDANCE WITH SECTION 905 OF THE R.I. STANDARD SPECIFICATIONS.
2. WHEN DRIVEWAY IS BELOW BACK EDGE OF SIDEWALK PROFILE, STD. 43.4.1 MUST BE USED.

DRIVEWAY DEVELOPMENT
NOT TO SCALE

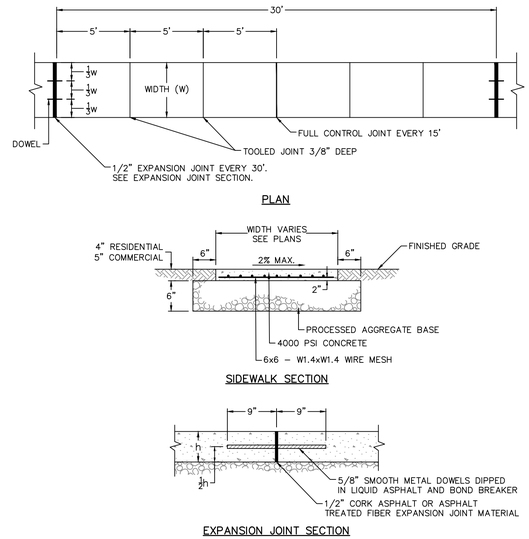

CONCRETE SIDEWALK
NOT TO SCALE

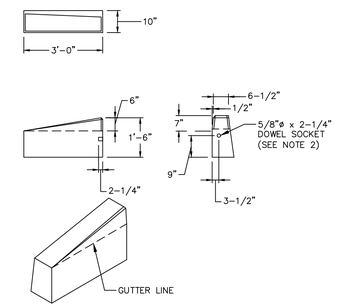

NOTE:
1. SHALL BE IN ACCORDANCE WITH SECTION 906 OF R.I. STANDARD SPECIFICATIONS.
2. DRAWING SHOWS TRANSITION CURB FOR ONE DIRECTION, FOR OTHER DIRECTION USE OPPOSITE HAND AND INCLUDE A 1/2"ø x 4" EPOXY COATED DOWEL.
3. EXPOSED SURFACES TO HAVE A SPONGE FLOAT FINISH.
4. EXPOSED EDGES TO HAVE A 3/4" CHAMFER.
5. LEFT AND RIGHT SECTIONS SHALL BE INSTALLED AS REQUIRED.

GRANITE TRANSITION CURB
NOT TO SCALE

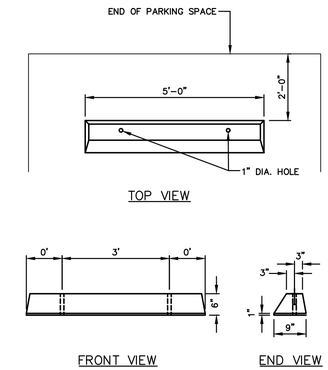

NOTES:
1. ALL SURFACES TO HAVE A SPONGE FLOAT FINISH.
2. EACH PRECAST CONCRETE CAR STOP SHALL BE FURNISHED WITH TWO 3/4"X 18" STEEL RODS.
3. ALL EXPOSED EDGES TO HAVE A 3/4" CHAMFER.

PRECAST CONCRETE WHEEL STOPS
NOT TO SCALE

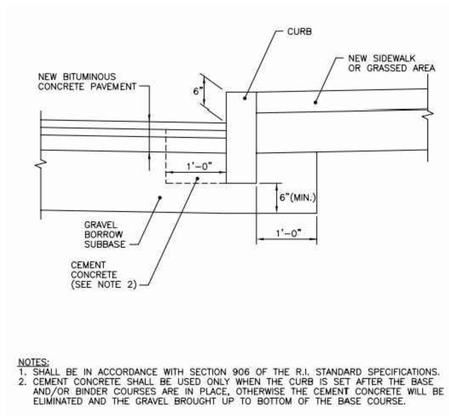

NOTES:
1. SHALL BE IN ACCORDANCE WITH SECTION 906 OF THE R.I. STANDARD SPECIFICATIONS.
2. CEMENT CONCRETE SHALL BE USED ONLY WHEN THE CURB IS SET AFTER THE BASE AND/OR BINDER COURSES ARE IN PLACE, OTHERWISE THE CEMENT CONCRETE WILL BE ELIMINATED AND THE GRAVEL BROUGHT UP TO BOTTOM OF THE BASE COURSE.

CURB SETTING
NOT TO SCALE

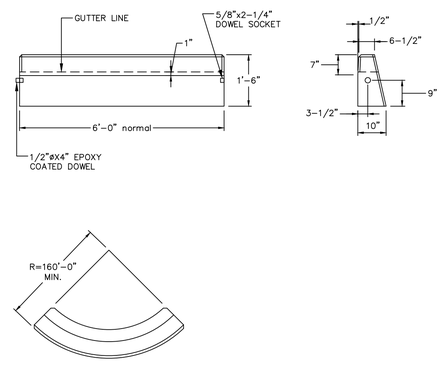

NOTE:
1. SHALL BE IN ACCORDANCE WITH SECTION 906 OF R.I. STANDARD SPECIFICATIONS.
2. MINIMUM LENGTH OF STRAIGHT OR CIRCULAR FILLER PIECES TO BE 3'-0".
3. EXPOSED SURFACES TO HAVE A SPONGE FLOAT FINISH.
4. CIRCULAR CURB IS REQUIRED ON CURVES WITH RADII OF 160'-0" OR LESS. STRAIGHT CURB TO BE USED ON CURVES OF MORE THAN 160'-0" RADIUS.
5. EXPOSED EDGES TO HAVE A 3/4" CHAMFER.

CONCRETE CURB
NOT TO SCALE

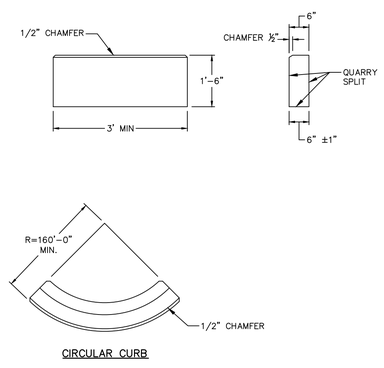

NOTE:
1. SHALL BE IN ACCORDANCE WITH SECTION 906 OF R.I. STANDARD SPECIFICATIONS.
2. TOP SURFACE TO BE DRESSED BY SAW. REMAINDER MAY BE QUARRY SPLIT.
3. MINIMUM LENGTH OF STRAIGHT OR CIRCULAR PIECES TO BE 3'-0".
4. CIRCULAR CURB IS REQUIRED ON CURVES WITH RADII OF 160'-0" OR LESS. STRAIGHT CURB TO BE USED ON CURVES OF MORE THAN 160'-0" RADIUS.

GRANITE CURB
NOT TO SCALE

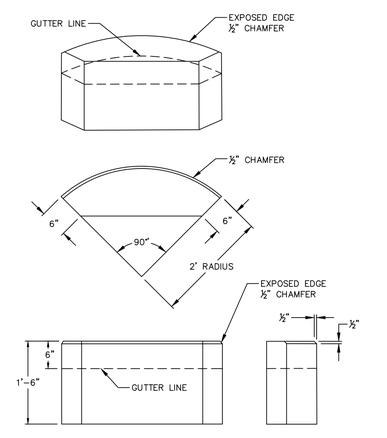

NOTES:
1. SHALL BE IN ACCORDANCE WITH SECTION 906 OF THE R.I. STANDARD SPECIFICATIONS.
2. TOP SURFACE TO BE DRESSED BY SAW. REMAINDER MAY BE QUARRY SPLIT.

GRANITE RADIUS CURB
NOT TO SCALE

PLANNING BOARD APPROVAL

PLANNING BOARD CHAIR OR DESIGNEE DATE

No.	DATE	DESCRIPTION	DESIGNER	REVIEWER

SEAL
SHAWN M. MARTIN
No. 7487
REGISTERED PROFESSIONAL ENGINEER (CIVIL)

SEAL

SCALE: HORZ.: AS NOTED VERT.:
DATUM: HORZ.: VERT.:
0
GRAPHIC SCALE

FUSS & O'NEILL
317 IRON HORSE WAY, SUITE 204
PROVIDENCE, RI 02908
401.861.3070
www.fando.com

BRADY SULLIVAN PROPERTIES, LLC
CIVIL DETAILS
BRISTOL YARN MILL
125 THAMES STREET BRISTOL, RHODE ISLAND

PROJ. No.: 20061150.A22
DATE: NOVEMBER 29, 2022
CD-502
SHEET 17 OF 26

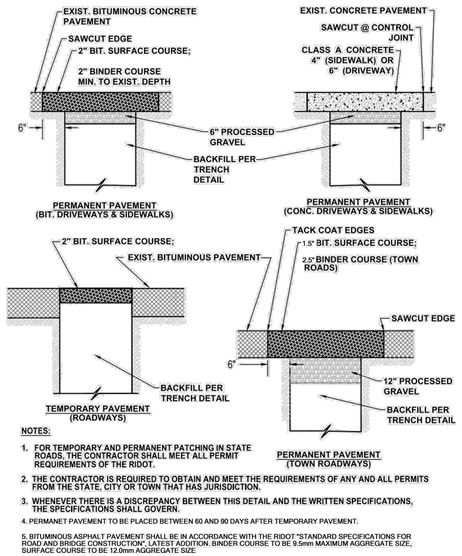

NOTES:

1. FOR TEMPORARY AND PERMANENT PATCHING IN STATE ROADS, THE CONTRACTOR SHALL MEET ALL PERMIT REQUIREMENTS OF THE RIDOT.
2. THE CONTRACTOR IS REQUIRED TO OBTAIN AND MEET THE REQUIREMENTS OF ANY AND ALL PERMITS FROM THE STATE, CITY OR TOWN THAT HAS JURISDICTION.
3. WHENEVER THERE IS A DISCREPANCY BETWEEN THIS DETAIL AND THE WRITTEN SPECIFICATIONS, THE SPECIFICATIONS SHALL GOVERN.
4. PERMANET PAVEMENT TO BE PLACED BETWEEN 60 AND 90 DAYS AFTER TEMPORARY PAVEMENT.
5. BITUMINOUS ASPHALT PAVEMENT SHALL BE IN ACCORDANCE WITH THE RIDOT "STANDARD SPECIFICATIONS FOR ROAD AND BRIDGE CONSTRUCTION", LATEST ADDITION. BINDER COURSE TO BE 9.5mm MAXIMUM AGGREGATE SIZE; SURFACE COURSE TO BE 12.0mm AGGREGATE SIZE.

PAVEMENT REPLACEMENT (BWCA DETAIL 11A)

NOT TO SCALE

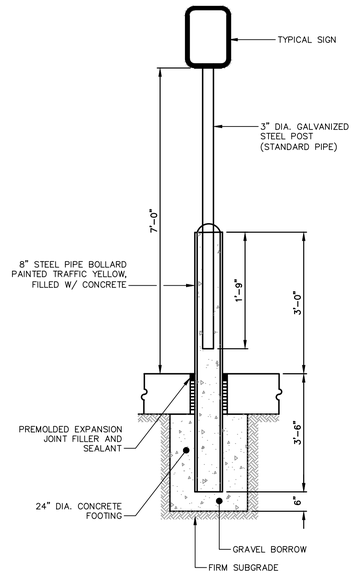

ACCESSIBLE PARKING SIGN BASE

NOT TO SCALE

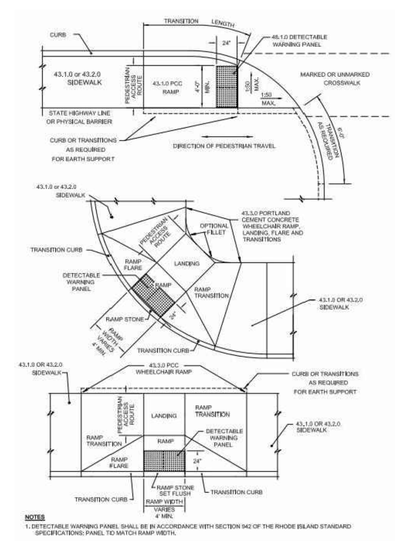

NOTES

1. DETECTABLE WARNING PANEL SHALL BE IN ACCORDANCE WITH SECTION 942 OF THE RHODE ISLAND STANDARD SPECIFICATIONS; PANEL TO MATCH RAMP WIDTH.

DETECTABLE WARNING PANEL

NOT TO SCALE

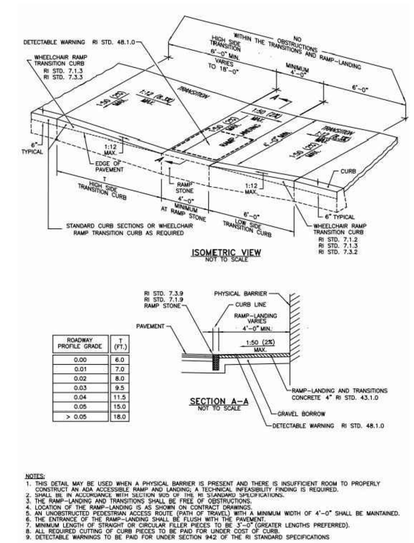

ROADWAY PROFILE GRADE	T (FT.)
0.00	6.0
0.01	7.0
0.02	8.0
0.03	9.5
0.04	11.5
0.05	15.0
> 0.05	18.0

NOTES:

1. THIS DETAIL MAY BE USED WHEN A PHYSICAL BARRIER IS PRESENT AND THERE IS INSUFFICIENT ROOM TO PROPERLY CONSTRUCT AN ADA ACCESSIBLE RAMP AND LANDING. A TECHNICAL INFEASIBILITY FINDING IS REQUIRED.
2. SHALL BE IN ACCORDANCE WITH SECTION 903 OF THE RI STANDARD SPECIFICATIONS.
3. THE RAMP-LANDING AND TRANSITIONS SHALL BE FREE OF OBSTRUCTIONS.
4. LOCATION OF THE RAMP-LANDING IS AS SHOWN ON CONTRACT DRAWINGS.
5. AN UNOBSTRUCTED PEDESTRIAN ACCESS ROUTE (PATH OF TRAVEL) WITH A MINIMUM WIDTH OF 4'-0" SHALL BE MAINTAINED.
6. THE ENTRANCE TO THE RAMP-LANDING SHALL BE FLUSH WITH THE PAVEMENT.
7. THE RAMP-LANDING TRANSITIONS SHALL BE FLUSH WITH THE CURB (GREATER LENGTHS PREFERRED).
8. ALL REQUIRED CUTTING OF CURB PIECES TO BE PAID FOR UNDER COST OF CURB.
9. DETECTABLE WARNINGS TO BE PAID FOR UNDER SECTION 942 OF THE RI STANDARD SPECIFICATIONS.

ACCESSIBLE RAMP

NOT TO SCALE

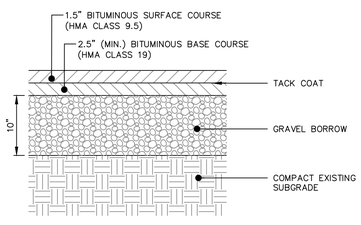

NOTES:

1. UNSUITABLE MATERIAL WITHIN SUBGRADE SHALL BE REMOVED AND REPLACED WITH GRAVEL BORROW.
2. GRAVEL BORROW SHALL MEET 95% MODIFIED PROCTOR FOR COMPACTION.
3. HOT MIX ASPHALT SHALL BE IN ACCORDANCE WITH SECTION 401 OF THE RI STANDARD SPECIFICATIONS.

BITUMINOUS CONCRETE PAVEMENT

NOT TO SCALE

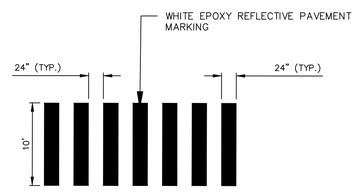

NOTE:

STOP LINES SHALL BE NO LESS THAN 4 FEET BEHIND ADJACENT CROSSWALK LINES.

CROSSWALK

NOT TO SCALE

NOTES:

1. INTERNATIONAL SYMBOL ACCESSIBILITY SIGN WITH LETTERING NO LESS THAN 1-INCH HIGH BOLTED TO GALVANIZED STEEL TUBE.
2. REFLECTORIZED 16 GAUGE GALVANIZED STEEL SIGN PANEL WITH PORCELAIN ENAMEL FINISH.
3. WHITE IMAGE ON BLUE FIELD BEADED REFLECTORIZED TEXTURE. COLOR #15090 FED. STANDARD 595a.

ACCESSIBLE PARKING SIGN

NOT TO SCALE

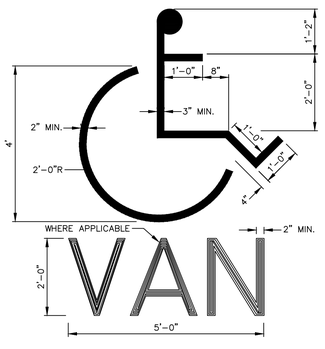

NOTES:

1. SYMBOL SHALL BE CENTERED IN THE PARKING STALL.
2. SYMBOL SHALL BE SOLID WHITE FAST-DRYING WATERBORNE PAINT AND BE CENTERED IN THE PARKING STALL. FOR VAN ACCESSIBLE SPACES, THE WORD "VAN" SHALL BE PAINTED ADJACENT TO HANDICAPPED SYMBOL.

ACCESSIBLE PARKING STALL SYMBOL

NOT TO SCALE

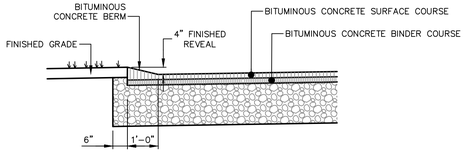

BITUMINOUS CONCRETE BERM

NOT TO SCALE

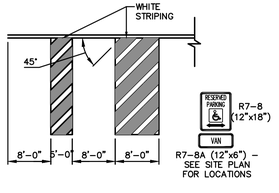

ACCESSIBLE PARKING STALL LAYOUT

NOT TO SCALE

PLANNING BOARD APPROVAL

PLANNING BOARD CHAIR OR DESIGNEE DATE

No.	DATE	DESCRIPTION	DESIGNER	REVIEWER

SEAL
SHAWN M. MARTIN
No. 7487
12/9/22
REGISTERED PROFESSIONAL ENGINEER (CIVIL)

SEAL

SCALE:
HORZ.: AS NOTED
VERT.:
DATUM:
HORZ.:
VERT.:
0
GRAPHIC SCALE

FUSS & O'NEILL
317 IRON HORSE WAY, SUITE 204
PROVIDENCE, RI 02908
401.861.3070
www.fando.com

BRADY SULLIVAN PROPERTIES, LLC

DETAILS

BRISTOL YARN MILL

125 THAMES STREET BRISTOL, RHODE ISLAND

PROJ. No.: 20061150.A22
DATE: NOVEMBER 29, 2022

CD-503

SHEET 18 OF 26

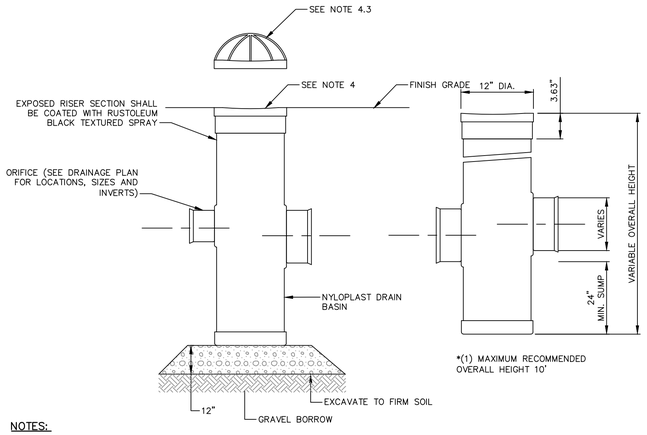

NOTES:

1. SEE DRAINAGE FOR PIPE SIZE, PIPE, MATERIAL, AND INVERTS.
2. GRAVEL BORROW SHALL BE COMPACTED TO 95-PERCENT MODIFIED PROCTOR.
3. GRAVEL BORROW SHALL CONFORM TO M.01.09, TABLE 1, COLUMN IA OF THE STANDARD SPECIFICATIONS.

DRAIN BASIN

NOT TO SCALE

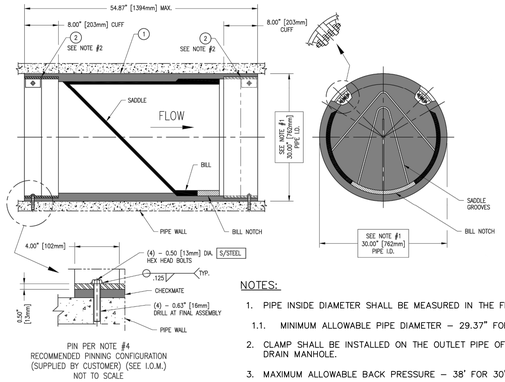

NOTES:

1. PIPE INSIDE DIAMETER SHALL BE MEASURED IN THE FIELD.
   1.1. MINIMUM ALLOWABLE PIPE DIAMETER – 29.37" FOR 30" NOMINAL
2. CLAMP SHALL BE INSTALLED ON THE OUTLET PIPE OF THE PROPOSED DRAIN MANHOLE.
3. MAXIMUM ALLOWABLE BACK PRESSURE – 38' FOR 30" NOMINAL
4. IT IS RECOMMEND TO BOLT OR PIN CHECKMATE TO PIPE AS SHOWN, 4 PLACES 90° APART.
5. TIDE GATE VALVE SHALL BE CHECKMATE ULTRAFLEX SLIP-IN INLINE CHECK VALVE MANUFACTURED BY TIDEFLEX TECHNOLOGIES OR APPROVED EQUAL.

TIDE VALVE

NOT TO SCALE

DIA.	15"
A	6.5"
B	10"
H	6.5"
L	25"
W	29"

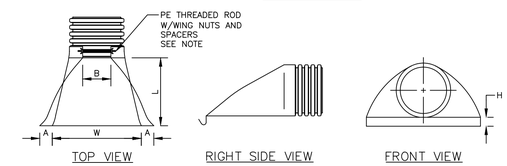

NOTES:

1. SHALL BE MANUFACTURED WITH POLYETHYLENE RESINS AS DESCRIBED AND DEFINED IN ASTM D3350.
2. WHEN PROVIDED, THE METAL THREADED FASTENING ROD SHALL BE STAINLESS STEEL

HDPE FLARED END SECTION

NOT TO SCALE

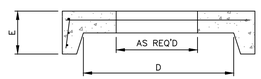

ALTERNATE TOP SLAB

(STEEL REINFORCED FOR HS-25 LOADING)

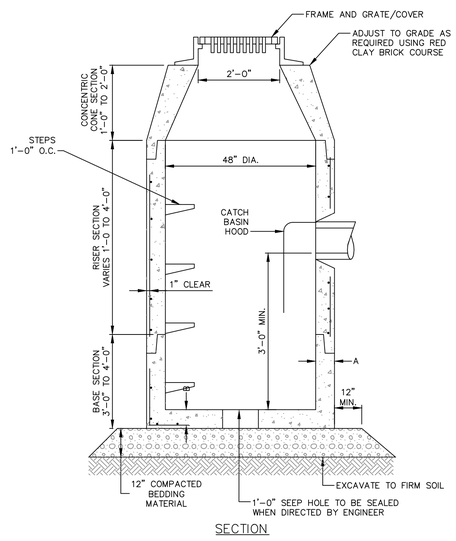

SECTION

NOTES:

1. FRAME AND GRATE SHALL BE R.I. STD. 6.3.0 OR APPROVED EQUAL.
2. INLET CATCH BASIN SHALL INCLUDE GRANITE APRON STONE PER PROVIDENCE STANDARD 7.3.7P, AND BE INSTALLED IN ACCORDANCE WITH INLET/APRON STONE REVEAL PER PROVIDENCE STANDARD 60.4.0P.
3. INLET CATCH BASIN SHALL HAVE 4' SUMP.
4. FRAMES SHALL BE SET IN FULL BED OF MORTAR. ADJUST TO GRADE WITH RED CLAY BRICKS AND MORTAR.
5. REINFORCING STEEL SHALL CONFORM TO ASTM A-185:
   - 0.12 SQ. IN./LIN. FT. CIRCUMFERENTIAL
   - 0.18 SQ. IN./FT. (BOTH WAYS) BASE BOTTOM
6. CONCRETE SHALL BE COMPRESSIVE STRENGTH 4,000 PSI TYPE II CEMENT.
7. ONE POUR MONOLITHIC BASE SECTION.
8. PROVIDE ASTM C923 RESILIENT CONNECTORS CAST OR FITTED INTO MANHOLE WALLS FOR EACH PIPE CONNECTION.
9. JOINT SEALANT SHALL BE PREFORMED BUTYL RUBBER MASTIC TYPE SEAL THAT COMPLIES WITH AASHTO M198 OR SYNTHETIC RUBBER GASKET THAT COMPLIES WITH ASTM C-443 OR C-361.
10. CATCH BASIN DESIGN SHALL CONFORM TO ASTM C-478 FOR "PRECAST REINFORCED CONCRETE MANHOLE SECTION.
11. CATCH BASIN STEPS SHALL BE ASTM A 615/A615M, DEFORMED, 1/2-INCH STEEL REINFORCED RODS ENCASED IN ASTM D 4101, POLYPROPYLENE PLASTIC. THE CENTERLINE OF OPENING MUST BE WITHIN 2'-0" FROM STEPS.
12. ANY NECESSARY ADJUSTMENTS DURING CONSTRUCTION WILL BE DONE BY SAW-CUTTING AND/OR CORING ONLY. NO JACKHAMMERS, HAMMERS AND CHISELS OR PNEUMATIC TOOLS WILL BE ALLOWED.

CATCH BASIN

NOT TO SCALE

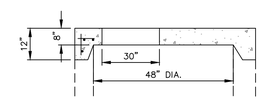

ALTERNATE TOP SLAB

(STEEL REINFORCED FOR HS-25 LOADING)

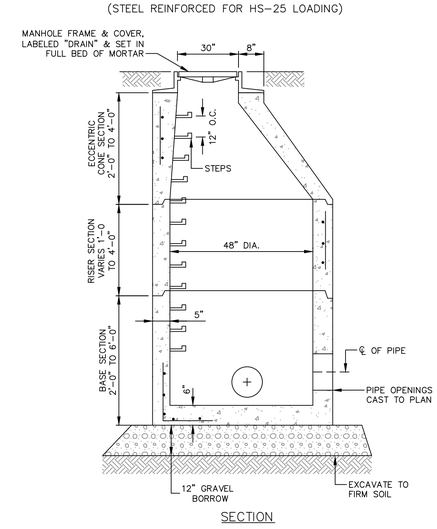

SECTION

NOTES:

1. FRAME AND COVER TO BE R.I. STD. 6.2.1 OR APPROVED EQUAL. LETTERING: "DRAIN"
2. FRAMES SHALL BE SET IN FULL BED OF MORTAR. ADJUST TO GRADE WITH RED CLAY BRICKS AND MORTAR.
3. REINFORCING STEEL SHALL CONFORM TO ASTM A-185:
   - 0.12 SQ. IN./LIN. FT. CIRCUMFERENTIAL
   - 0.18 SQ. IN./FT. (BOTH WAYS) BASE BOTTOM
4. CONCRETE SHALL BE COMPRESSIVE STRENGTH 4,000 PSI TYPE II CEMENT.
5. ONE POUR MONOLITHIC BASE SECTION.
6. PROVIDE ASTM C923 RESILIENT CONNECTORS CAST OR FITTED INTO MANHOLE WALLS FOR EACH PIPE CONNECTION.
7. JOINT SEALANT SHALL BE PREFORMED BUTYL RUBBER MASTIC TYPE SEAL THAT COMPLIES WITH AASHTO M198 OR SYNTHETIC RUBBER GASKET THAT COMPLIES WITH ASTM C-443 OR C-361.
8. MANHOLE DESIGN SHALL CONFORM TO ASTM C-478 FOR "PRECAST REINFORCED CONCRETE MANHOLE SECTIONS."
9. MANHOLE STEPS SHALL BE ASTM A 615/A615M, DEFORMED, 1/2-INCH STEEL REINFORCED RODS ENCASED IN ASTM D 4101, POLYPROPYLENE PLASTIC. THE CENTERLINE OF OPENING MUST BE WITHIN 2'-0" FROM STEPS.
10. ANY NECESSARY ADJUSTMENTS DURING CONSTRUCTION WILL BE DONE BY SAW-CUTTING AND/OR CORING ONLY. NO JACKHAMMERS, HAMMERS AND CHISELS OR PNEUMATIC TOOLS WILL BE ALLOWED.
11. INVERT CONSTRUCTED OF BRICK OR CEMENT CONCRETE, CLASS D.

DRAIN MANHOLE

NOT TO SCALE

PLANNING BOARD APPROVAL

PLANNING BOARD CHAIR OR DESIGNEE DATE

No.	DATE	DESCRIPTION	DESIGNER	REVIEWER

SEAL
SHAWN M. MARTIN
No. 7487
REGISTERED PROFESSIONAL ENGINEER (CIVIL)

SEAL

SCALE: HORZ.: AS NOTED VERT.:
DATUM: HORZ.: VERT.:
0
GRAPHIC SCALE

FUSS & O'NEILL
317 IRON HORSE WAY, SUITE 204
PROVIDENCE, RI 02908
401.861.3070
www.fando.com

BRADY SULLIVAN PROPERTIES, LLC

DETAILS

BRISTOL YARN MILL

125 THAMES STREET BRISTOL, RHODE ISLAND

PROJ. No.: 20061150.A22
DATE: NOVEMBER 29, 2022

CD-504

SHEET 19 OF 26

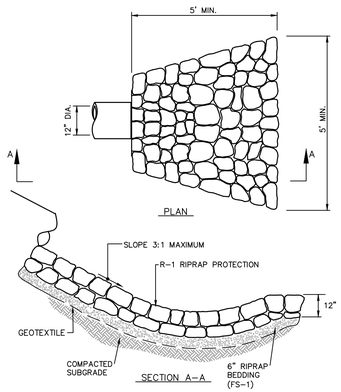

RIPRAP SPLASH PAD
NOT TO SCALE

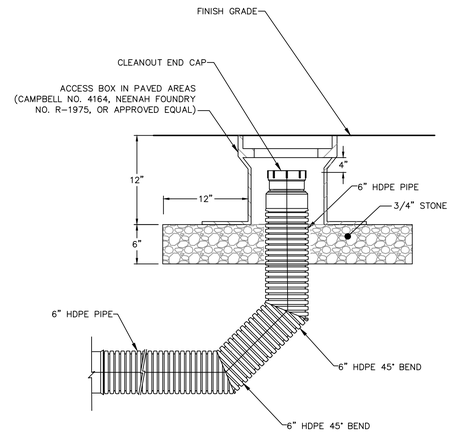

NOTE:

1. IN UNPAVED AREAS, CLEANOUT CAP SHALL BE BURIED 3 INCHES.
2. ACCESS BOX IN PAVED AREAS SHALL HAVE 9.5" SOLID COVER WITH LETTERING "CLEANOUT".
3. IN-LINE CLEANOUTS SHALL HAVE TEE WYE IN LIEU OF TWO 45 DEGREE BENDS.

STORM DRAIN CLEANOUT
NOT TO SCALE

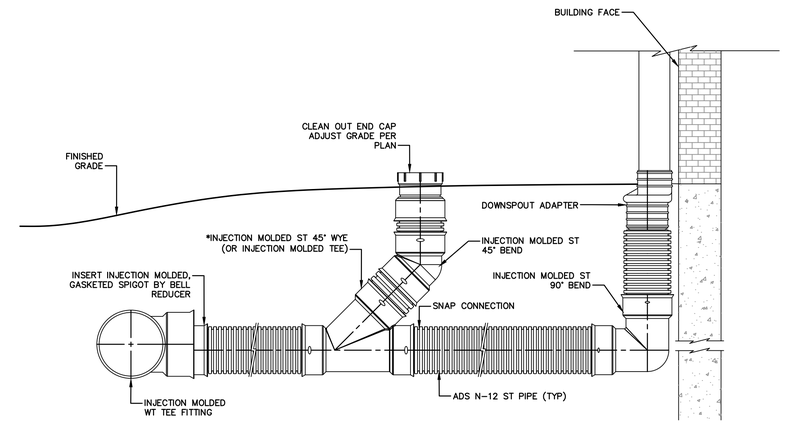

DOWNSPOUT CONNECTION
NOT TO SCALE

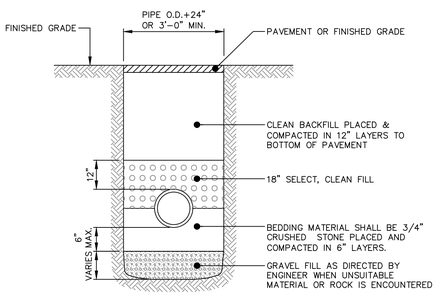

STORM DRAIN TRENCH
NOT TO SCALE

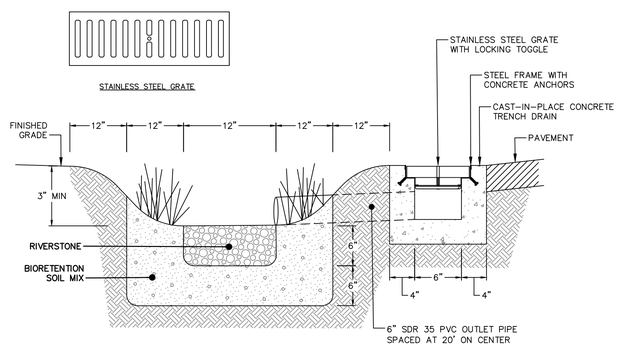

NOTE:

SEASONAL HIGH GROUNDWATER TABLE (SHGWT) ELEVATION IS APPROXIMATELY 5.5'. BOTTOM OF CHANNEL SHALL BE LOCATED AT OR ABOVE SHGWT.

STONE CHANNEL 1
NOT TO SCALE

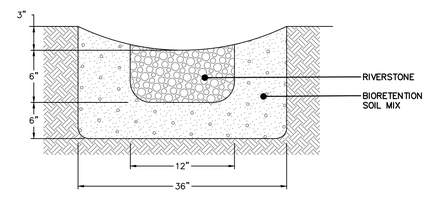

NOTE:

SEASONAL HIGH GROUNDWATER TABLE (SHGWT) ELEVATION IS APPROXIMATELY 5.5'. BOTTOM OF CHANNEL SHALL BE LOCATED AT OR ABOVE SHGWT.

STONE CHANNEL 2
NOT TO SCALE

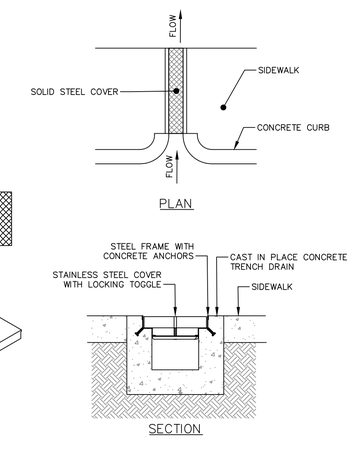

TRENCH DRAIN (SOLID COVER)
NOT TO SCALE

PLANNING BOARD APPROVAL

PLANNING BOARD CHAIR OR DESIGNEE DATE

No.	DATE	DESCRIPTION	DESIGNER	REVIEWER

SEAL: SHAWN M. MARTIN, No. 7487, REGISTERED PROFESSIONAL ENGINEER (CIVIL)

SEAL

SCALE: HORZ.: AS NOTED; VERT.:
DATUM: HORZ.: VERT.:
0 GRAPHIC SCALE

FUSS & O'NEILL
317 IRON HORSE WAY, SUITE 204
PROVIDENCE, RI 02908
401.861.3070
www.fando.com

BRADY SULLIVAN PROPERTIES, LLC

DETAILS

BRISTOL YARN MILL

125 THAMES STREET BRISTOL, RHODE ISLAND

PROJ. No.: 20061150.A22
DATE: NOVEMBER 29, 2022

CD-505

SHEET 20 OF 26

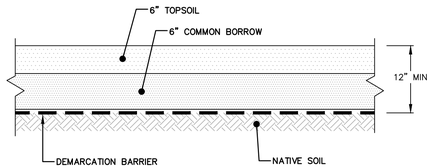

NOTES:

1. IMPORTED CLEAN SOIL MUST BE LABORATORY TESTED TO DEMONSTRATE COMPLIANCE WITH THE REMEDIAL ACTION WORK PLAN.
2. REUSE TOPSOIL ON-SITE. VERIFY SUITABILITY OF STOCKPILED TOPSOIL TO PRODUCE LOAM. CLEAN TOPSOIL OF ROOTS, PLANTS, SOD, STONES, CLAY LUMPS, AND OTHER EXTRANEOUS MATERIALS HARMFUL TO PLANT GROWTH.

2.1. SUPPLEMENT WITH IMPORTED OR MANUFACTURED LOAM FROM OFF-SITE SOURCES WHEN QUANTITIES ARE INSUFFICIENT, OBTAIN TOPSOIL DISPLACED FROM NATURALLY WELL-DRAINED CONSTRUCTION OR MINING SITES WHERE TOPSOIL OCCURS AT LEAST 4 INCHES DEEP.

3. LOAM OR RESPREAD TOPSOIL SHALL CONFORM TO ASTM D5268, WITH PH BETWEEN 5.5 AND 7, A MINIMUM OF 6 PERCENT ORGANIC MATERIAL CONTENT, FREE OF STONES 1 INCH OR LARGER AND FREE OF OTHER EXTRANEOUS MATERIALS. SHALL NOT BE OBTAINED FROM AGRICULTURAL LAND, BOGS, OR MARSHES.
4. ALL SURFACED AREAS OR DISTURBED AREAS NOT SPECIFIED ON THE PLANS SHALL RECEIVE 4 INCHES OF LOAM OR RESPREAD TOPSOIL, SEED, MULCH, AND BE WATERED UNTIL A HEALTHY STAND OF GRASS IS OBTAINED.
5. CLEAN SOIL SHALL ONLY BE IMPORTED WHERE CURRENT CAP MATERIAL DOES NOT MEET CAP REQUIREMENT OF 24-INCHES.
6. SEE LANDSCAPE PLANS FOR FINISH SURFACE TREATMENTS.
7. SOIL CAP IS REQUIRED FOR ANY LANDSCAPED AREAS ON THE MILL LOT SITE INCLUDING PLAT 10, LOTS 42, 60, 61, 62, AND 73.

SOIL CAP

NOT TO SCALE

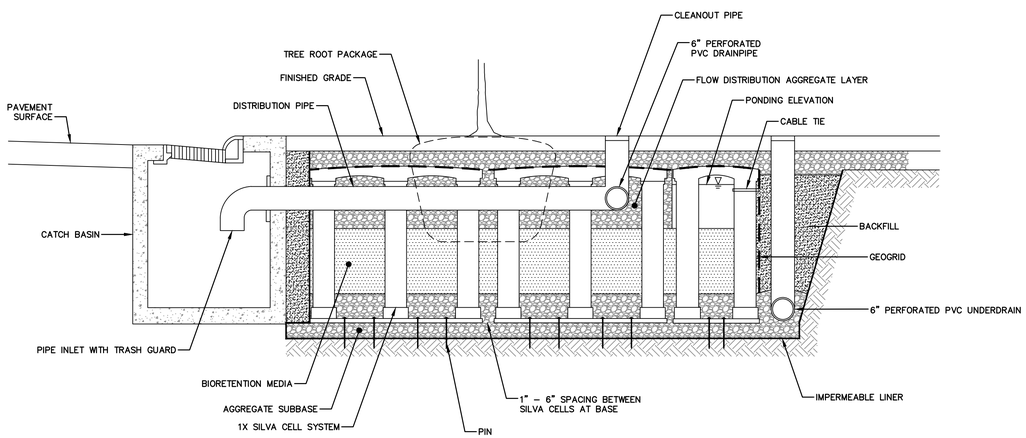

TREE FILTER 1 & 2

NOT TO SCALE

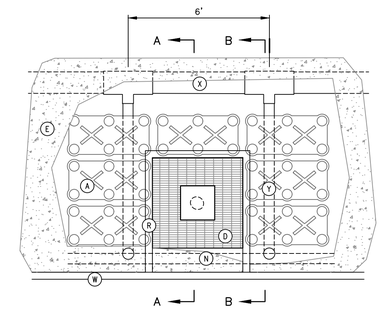

PLAN

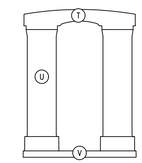

SILVA CELL COMPONENTS

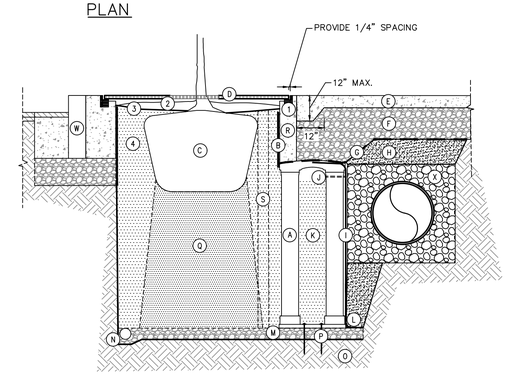

SECTION A-A

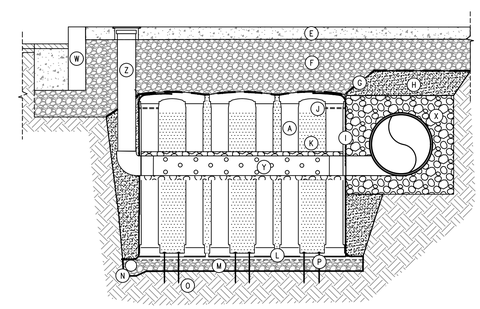

SECTION B-B

KEY PLAN

- (A) SILVA CELL 2 SYSTEM (DECK, BASE, AND POSTS).
- (B) DEEPROOT ROOT BARRIER DEEPROOT ROOT BARRIER INSTALLED TO A DEPTH 18 INCHES BELOW TOP OF TREE PIT.
- (C) TREE ROOT PACKAGE, SIZE VARIES. REMOVE ALL TWINE & STRAPS. CUT AND REMOVE BURLAP AND WIRE CAGE FROM TOP 1/2 OF BALL. REMOVE ALL SYNTHETIC MATERIALS.
- (D) TREE GRATE ASSEMBLY WITH CONCRETE ANCHOR.
- (E) EXPOSED AGGREGATE CONCRETE SIDEWALK WITH HAUNCHED EDGE
- (F) GRAVEL BORROW COURSE. GRAVEL BORROW. 18-INCH DEPTH ABOVE SILVA CELLS. TRANSITION TO STANDARD GRAVEL BORROW DEPTH PER CONCRETE SIDEWALK DETAIL.
- (G) GEOTEXTILE TO EDGE OF EXCAVATION.
- (H) BACKFILL, TO WITHIN 4-6" BELOW TOP OF SILVA CELL DECKS. INSTALL IN 8" LIFTS, EACH COMPACTED TO 95% MODIFIED PROCTOR.
- (I) IMPERMEABLE LINER.
- (J) CABLE TIE, ATTACHING GEOGRID TO SILVA CELL AT BASE OF UPPER POST FLARE.
- (K) PLANTING SOIL TO 7" BELOW DECK, MANUALLY COMPACTED TO APPROXIMATE 70% MODIFIED PROTOR.
- (L) 1" - 6" SPACING BETWEEN SILVA CELLS AT BASE.
- (M) 4" MIN. GRAVEL BORROW, COMPACTED TO 95% MODIFIER MODIFIED PROCTOR.
- (N) 6" PERFORATED PVC UNDERDRAIN PIPE, 0.0 FT/FT SLOPE.
- (O) SUBGRADE, COMPACTED TO 95% MODIFIED PROCTOR.
- (P) PIN, PER SILVA CELL SPECIFICATIONS, TO KEEP CELLS IN PLACE DURING CONSTRUCTION.
- (Q) PLANTING SOIL BELOW TREE ROOT PACKAGE, COMPACTED TO 85-90% MODIFIED PROCTOR.
- (R) 18-INCH CAST-IN-PLACE CONCRETE CURB TO STABILIZE EDGE AND PREVENT AGGREGATE MIGRATION INTO TREE OPENING.
- (S) 4" PERFORATED PVC INSPECTION RISER TO PROVIDE FOR MONITORING OF SOIL MOISTURE.
- (T) SILVA CELL DECK
- (U) SILVA CELL POST
- (V) SILVA CELL BASE
- (W) 18-INCH GRANITE CURB IN EXISTING PAVEMENT
- (X) 18" X 6" HDPE MANIFOLD, 0.0 FT/FT SLOPE, INSTALL PER STORM DRAIN TRENCH DETAIL.
- (Y) 6" PERFORATED PVC PIPE, 0.0 FT/FT SLOPE, ENCASED IN 3" OF CLEAN, WASHED, 1" DIAMETER CRUSHED STONE. PERFORATIONS MUST FACE DOWN.
- (Z) 6" SOLID PVC CLEANOUT, CAPPED, WITH ROUND, HEAVY-DUTY CAST IRON FRAME AND COVER.
- (1) SQUARE FRAME FRAME SET IN CONTINUOUS 4"x6" CONCRETE RING. INSURE PROPER EQUAL SLOPES ON ALL SIDES TO PROVIDE CONSISTENT SEAT FOR TREE GRATES. VARIATIONS OR WOBBLING GRATES WILL NOT BE PERMITTED
- (2) ORGANIC MULCH
- (3) WEED BARRIER
- (4) BACKFILL WITH PLANTING SOIL MIXTURE IN 9" LAYERS. WATER EACH LAYER UNTIL SETTLED. DO NOT TAMP. (SEE TREE PLANTING DETAILS)

TREE FILTER 3

NOT TO SCALE

PLANNING BOARD APPROVAL

PLANNING BOARD CHAIR OR DESIGNEE DATE

No.	DATE	DESCRIPTION	DESIGNER	REVIEWER

SEAL
SHAWN M. MARTIN
No. 7487
REGISTERED PROFESSIONAL ENGINEER (CIVIL)

SEAL

SCALE:
HORZ.: AS NOTED
VERT.:
DATUM:
HORZ.:
VERT.:
0
GRAPHIC SCALE

FUSS & O'NEILL
317 IRON HORSE WAY, SUITE 204
PROVIDENCE, RI 02908
401.861.3070
www.fando.com

BRADY SULLIVAN PROPERTIES, LLC

DETAILS

BRISTOL YARN MILL

125 THAMES STREET BRISTOL, RHODE ISLAND

PROJ. No.: 20061150.A22
DATE: NOVEMBER 29, 2022

CD-506

SHEET 21 OF 26

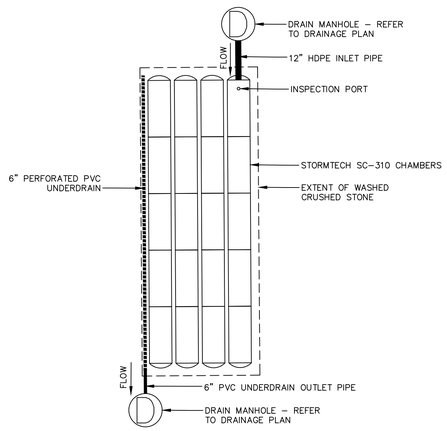

PLAN

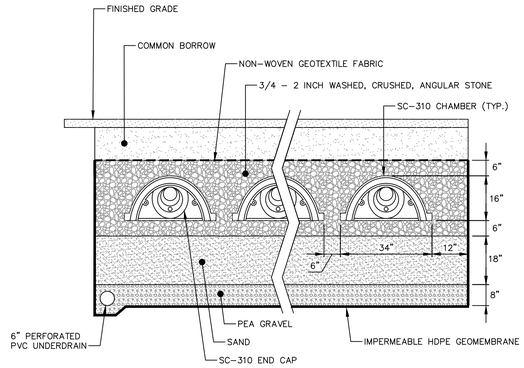

SECTION

NOTE:

INSTALL PER MANUFACTURER'S INSTRUCTIONS.

SUBSURFACE FILTRATION SYSTEM 1

NOT TO SCALE

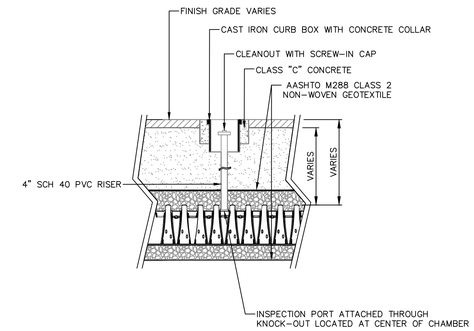

INSPECTION PORT

NOT TO SCALE

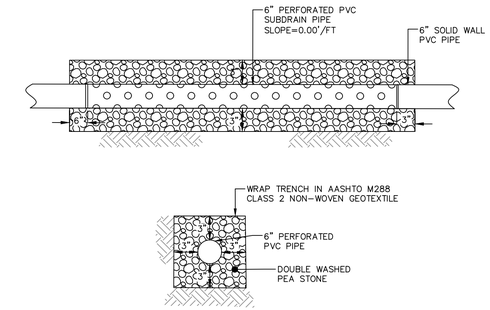

UNDERDRAIN

NOT TO SCALE

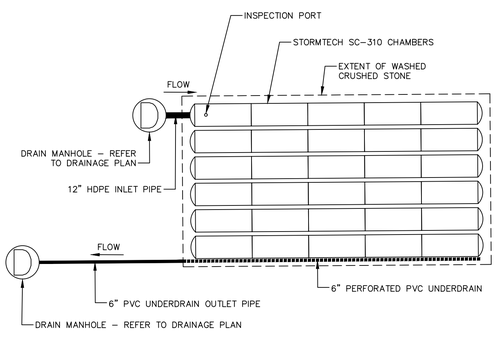

PLAN

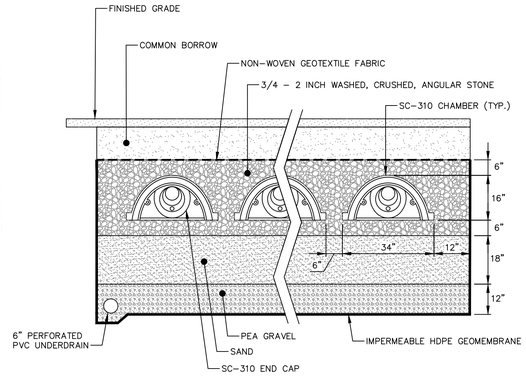

SECTION

NOTE:

INSTALL PER MANUFACTURER'S INSTRUCTIONS.

SUBSURFACE FILTRATION SYSTEM 2

NOT TO SCALE

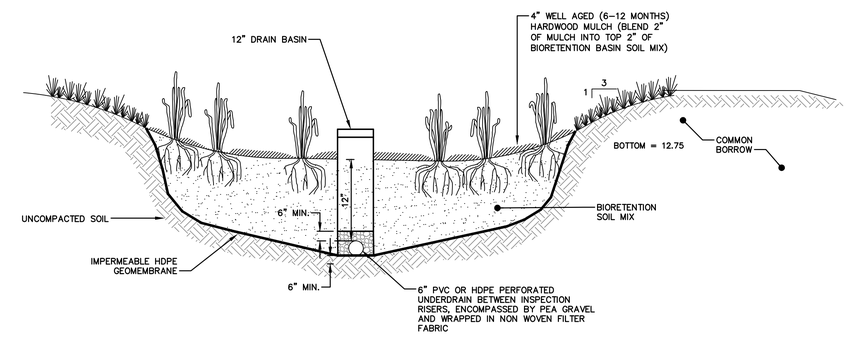

NOTES:

1. BIORETENTION SOIL MIX SHALL HAVE A LOAMY SAND TEXTURE PER USDA TEXTURAL TRIANGLE WITH A MAXIMUM CLAY CONTENT OF LESS THAN 2%. SOIL MIXTURE SHALL BE 85–88% SAND, 8–12% SOIL FINES, AND 3–5% ORGANIC MATTER.
2. THE SOIL SHALL BE A UNIFORM MIX, FREE OF STONES, STUMPS, ROOTS, OR OTHER SIMILAR OBJECTS LARGER THAN TWO INCHES. SOIL SHALL BE FREE OF BERMUDA GRASS, QUACKGRASS, JOHNSON GRASS, MUGWORT, NUTSEDGE, POISON IVY, CANADIAN THISTLE, TEARTHUB, OR OTHER NOXIOUS WEEDS.
3. PRIOR TO INSTALLATION, SOIL SHALL BE TESTED AND CONFORM TO THE FOLLOWING CRITERIA:
   PH RANGE: 5.7 – 7.0
   MAGNESIUM: 32 PPM MIN.
   PHOSPHORUS P205: NOT TO EXCEED 69 PPM
   POTASSIUM K20: 78 PPM MIN.
   SOLUBLE SALTS: NOT TO EXCEED 500 PPM

RAIN GARDEN

NOT TO SCALE

PLANNING BOARD APPROVAL

PLANNING BOARD CHAIR OR DESIGNEE DATE

No.	DATE	DESCRIPTION	DESIGNER	REVIEWER

SEAL
SHAWN M. MARTIN
No. 7487
REGISTERED PROFESSIONAL ENGINEER (CIVIL)

SEAL

SCALE:
HORZ.: AS NOTED
VERT.:
DATUM:
HORZ.:
VERT.:
0
GRAPHIC SCALE

FUSS & O'NEILL
317 IRON HORSE WAY, SUITE 204
PROVIDENCE, RI 02908
401.861.3070
www.fando.com

BRADY SULLIVAN PROPERTIES, LLC

DETAILS

BRISTOL YARN MILL

125 THAMES STREET BRISTOL, RHODE ISLAND

PROJ. No.: 20061150.A22
DATE: NOVEMBER 29, 2022

CD-507

SHEET 22 OF 26

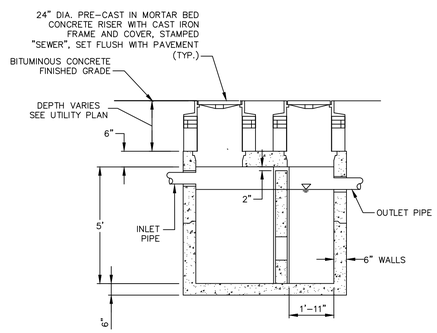

SECTION A–A

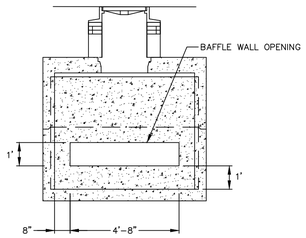

SECTION B–B

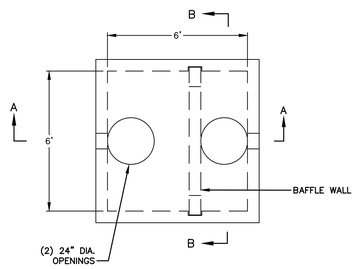

PLAN VIEW

NOTES:

1. VOLUME SHALL BE 1,000 GALLONS.
2. CONCRETE : 5,000 P.S.I MINIMUM STRENGTH @ 28 DAYS
3. STEEL REINFORCING ASTM A–615, GRADE 60
4. COVER TO STEEL 1" MINIMUM
5. TANKS SHALL MEET ASTM C858 AND ACI 318 WITH AASHTO HS–20 LOADING
6. EARTH COVER 0 MIN. TO 5 FEET MAX
7. EARTH COVER 0 MIN. TO 5 FEET MAX

OIL/WATER SEPARATOR

NOT TO SCALE

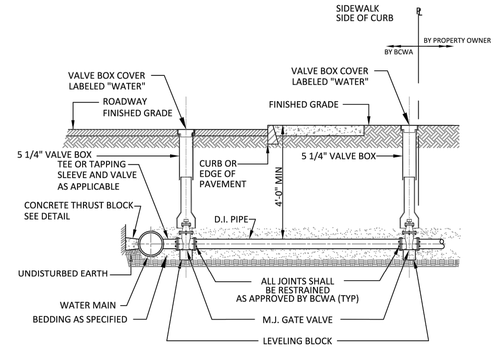

NOTE:

1.) ALL SERVICE MATERIALS, BEDDING AND BACKFILL PER BCWA SPECIFICATIONS.
2.) SERVICE LINE FROM GATE BOX TO BUILDING SHALL BE INSPECTED AND APPROVED BY THE BCWA PRIOR TO BEING BACKFILLED AND/OR ACTIVATED.
3.) TAPPING SLEEVE TO BE PRESSURE TESTED PRIOR TO INSTALLATION.
4.) STREET SIDE OF SERVICE TO BE INSTALLED FIRST, LOCATION TO BE DETERMINED BY BCWA.
5.) WHENEVER THERE IS A DISCREPANCY BETWEEN THIS DETAIL AND THE WRITTEN SPECIFICATIONS, THE SPECIFICATIONS SHALL GOVERN.

SERVICE CONNECTION 4 INCHES & GREATER (BCWA DETAIL 10C)

NOT TO SCALE

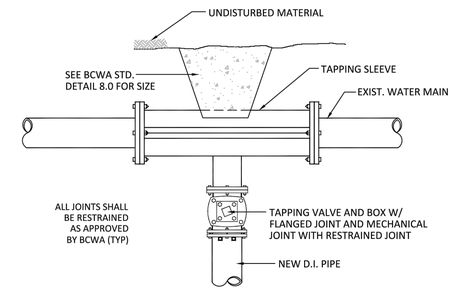

NOTE:

1.) TAPPING SLEEVE, VALVE AND PIPE TO BE DISINFECTED WITH CHLORINE SOLUTION PRIOR TO INSTALL.
2.) TAPPING SLEEVE TO BE PRESSURE TESTED USING AIR PRIOR TO TAPPING PIPE.
3.) ALL MATERIALS, BEDDING AND BACKFILL PER BCWA SPECIFICATIONS.
4.) THRUST BLOCK PER BCWA SPECIFICATIONS. SEE BCWA STD. DETAIL 8.0.
5.) ALL WORK AND MATERIALS SHALL BE INSPECTED AND APPROVED BY THE BCWA PRIOR TO BEING BACKFILLED AND/OR ACTIVATED.
6.) WHENEVER THERE IS A DISCREPANCY BETWEEN THIS DETAIL AND THE WRITTEN SPECIFICATIONS, THE SPECIFICATIONS SHALL GOVERN.

TAPPING SLEEVE AND VALVE (BCWA DETAIL 3)

NOT TO SCALE

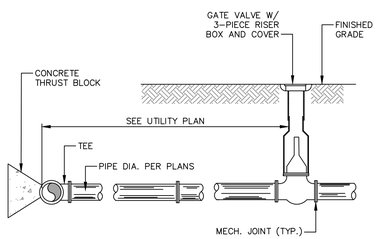

FIRE PROTECTION SERVICE CONNECTION

NOT TO SCALE

TABLE OF DIMENSIONS

BENDS	B	C	D	E	F	BENDS	B	C	D	E	
6" 111/4°	8"	15"	12"	24"	12"	6" 45°	8"	30"	12"	24"	14"
6" 221/2°	"	19"	"	"	13"	6" 90°	"	30"	"	"	27"
8" 111/4°	"	20"	"	"	12"	8" 45°	"	30"	"	"	24"
8" 221/2°	"	22"	"	"	17"	8" 90°	"	38"	"	"	36"
12" 111/4°	"	30"	"	"	15"	12" 45°	"	40"	"	"	40"
12" 221/2°	"	35"	"	"	25"	12" 90°	"	60"	"	"	52"

BENDS

1

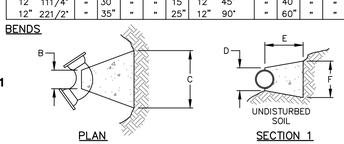

PLAN SECTION 1

TABLE OF DIMENSIONS

TEES	G	H	I	J	TEES	G	H	I	J	
6"x 6"x 6"	12"	24"	24"	18"	12"x 12"x 6"	12"	24"	24"	18"	
8"x 8"x 6"	"	"	"	"	12"x 12"x 8"	"	"	"	24"	
8"x 8"x 8"	"	"	"	24"	12"x 12"x 12"	"	36"	"	36"	

TEES

2

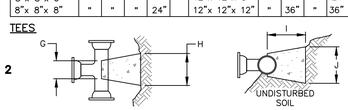

PLAN SECTION 2–2

NOTES:

1. PROVIDE BLOCKS FOR TAPPING SLEEVES, DEAD ENDS, GATE VALVES, AND VERTICAL BENDS (SAME SIZE AS REQUIRED FOR TEES). PROVIDE ANCHOR RODS AT VERTICAL BENDS AND GATE VALVES.
2. CONCRETE SHALL NOT BE PLACED AGAINST PIPE BEYOND FITTING.
3. CONCRETE SHALL HAVE 3,000 PSI MINIMUM COMPRESSIVE STRENGTH AT 28 DAYS.

CONCRETE THRUST BLOCK

NOT TO SCALE

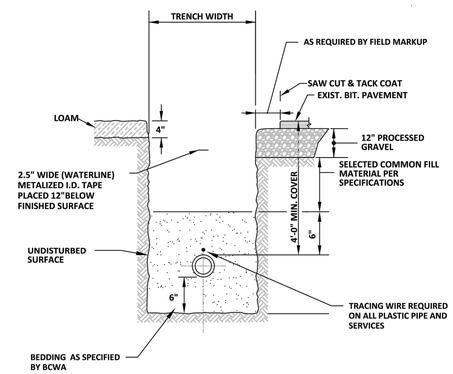

NOTES:

1.) ALL MATERIALS, BEDDING AND BACKFILL PER BCWA SPECIFICATIONS AND SHALL BE INSPECTED AND APPROVED BY THE BCWA PRIOR TO BEING BACKFILLED AND/OR ACTIVATED.
2.) ROADWAY AND SIDEWALK RESTORATION SHALL BE PERFOMED IN ACCORDANCE WITH ALL MUNICIPAL OR RIDOT PERMIT REQUIREMENTS.
3.) WHENEVER THERE IS A DISCREPANCY BETWEEN THIS DETAIL AND THE WRITTEN SPECIFICATIONS, THE SPECIFICATIONS SHALL GOVERN.

WATER TRENCH (BCWA DETAIL 1)

NOT TO SCALE

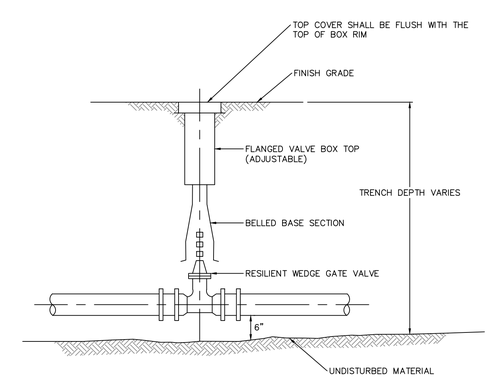

NOTE: FURNISH TWO OPERATING WRENCHES TO OWNER.

GATE VALVE

NOT TO SCALE

PLANNING BOARD APPROVAL

PLANNING BOARD CHAIR OR DESIGNEE DATE

No.	DATE	DESCRIPTION	DESIGNER	REVIEWER

SEAL
SHAWN M. MARTIN
No. 7487
REGISTERED PROFESSIONAL ENGINEER (CIVIL)

SEAL

SCALE:
HORZ.: AS NOTED
VERT.:
DATUM:
HORZ.:
VERT.:
0
GRAPHIC SCALE

FUSS & O'NEILL
317 IRON HORSE WAY, SUITE 204
PROVIDENCE, RI 02908
401.861.3070
www.fando.com

BRADY SULLIVAN PROPERTIES, LLC

DETAILS

BRISTOL YARN MILL

125 THAMES STREET BRISTOL, RHODE ISLAND

PROJ. No.: 20061150.A22
DATE: NOVEMBER 29, 2022

CD-508

SHEET 23 OF 26

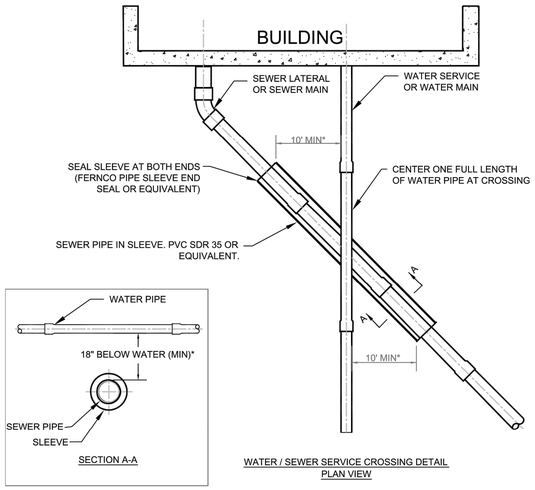

WATER / SEWER SERVICE CROSSING DETAIL
PLAN VIEW

IF THE 18 INCH MINIMUM VERTICAL SEPARATION CANNOT BE MAINTAINED, CONSTRUCT
* SEWER USING AWWA APPROVED WATER MAIN PIPE AND PRESSURE TEST TO 150psi. FOR A DISTANCE OF 10 FEET ON EACH SIDE OF THE CROSSING, MEASURED PARALLEL TO THE WATER PIPE, OR ENCASE SEWER PIPE IN PVC SLEEVE.

WATER & SEWER SERVICE CROSSING (BCWA DETAIL 9A)

NOT TO SCALE

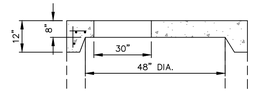

ALTERNATE TOP SLAB
(STEEL REINFORCED FOR HS-25 LOADING)

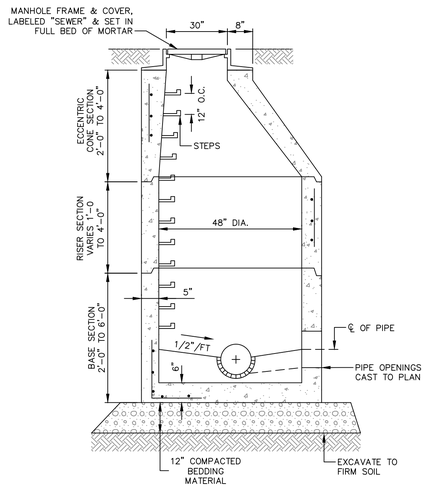

SECTION

NOTES:

1. FRAME AND COVER TO BE R.I. STD. 6.2.1 OR APPROVED EQUAL. LETTERING: "SEWER"
2. FRAMES SHALL BE SET IN FULL BED OF MORTAR. ADJUST TO GRADE WITH RED CLAY BRICKS AND MORTAR.
3. REINFORCING STEEL SHALL CONFORM TO ASTM A-185:
   - 0.12 SQ. IN./LIN. FT. CIRCUMFERENTIAL
   - 0.18 SQ. IN./FT. (BOTH WAYS) BASE BOTTOM
4. CONCRETE SHALL BE COMPRESSIVE STRENGTH 4,000 PSI TYPE II CEMENT.
5. ONE POUR MONOLITHIC BASE SECTION.
6. PROVIDE "V" KNOCKOUTS FOR PIPES WITH 2" MAX. CLEARANCE TO OUTSIDE OF PIPE. MORTAR ALL PIPE CONNECTIONS.
7. JOINT SEALANT SHALL BE PREFORMED BUTYL RUBBER MASTIC TYPE SEAL THAT COMPLIES WITH AASHTO M198 OR SYNTHETIC RUBBER GASKET THAT COMPLIES WITH ASTM C-443 OR C-361.
8. MANHOLE DESIGN SHALL CONFORM TO ASTM C-478 FOR "PRECAST REINFORCED CONCRETE MANHOLE SECTIONS."
9. MANHOLE STEPS SHALL BE ASTM A 615/A615M, DEFORMED, 1/2-INCH STEEL REINFORCED RODS ENCASED IN ASTM D 4101, POLYPROPYLENE PLASTIC. THE CENTERLINE OF OPENING MUST BE WITHIN 2'-0" FROM STEPS.
10. ANY NECESSARY ADJUSTMENTS DURING CONSTRUCTION WILL BE DONE BY SAW-CUTTING AND/OR CORING ONLY. NO JACKHAMMERS, HAMMERS AND CHISELS OR PNEUMATIC TOOLS WILL BE ALLOWED.
11. INVERT CONSTRUCTED OF BRICK OR CEMENT CONCRETE, CLASS D.

SEWER MANHOLE

NOT TO SCALE

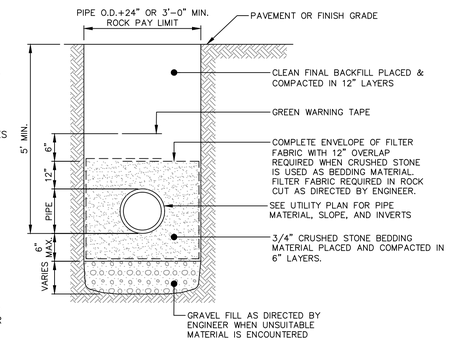

NOTES:

1. SEWER TO BE INSULATED WITH 2" RIGID FOAM WHEN LESS THAN 4' COVER IS PROVIDED.

SEWER TRENCH

NOT TO SCALE

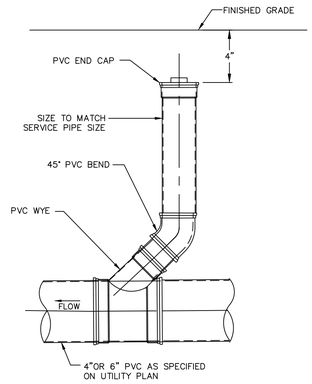

NOTE:

IN PAVED AREAS, ZURN ADJUSTABLE CLEAN-OUT WITH CAST IRON FRAME AND COVER SHALL BE USED IN LIEU OF PVC END CAP.

SEWER CLEANOUT

NOT TO SCALE

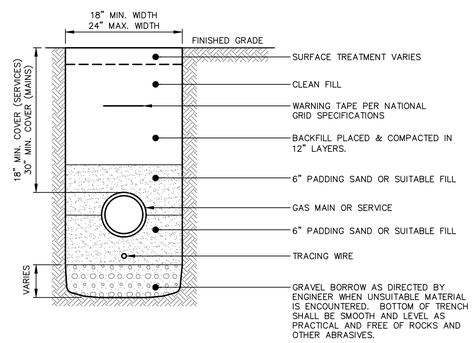

NOTES:

1. BEDDING MATERIAL AND INITIAL BACKFILL SHALL BE CLEAN, FREE OF DEBRIS AND RUBBLE, AND FREE OF MATERIALS WHICH MAY CAUSE POLLUTION OF GROUNDWATER.
2. SPOIL SHOULD BE SET BACK A MINIMUM OF TWO (2) FEET IN ACCORDANCE WITH OSHA REGULATIONS.
3. GAS SERVICE MUST HAVE A MINIMUM HORIZONTAL SEPARATION OF THREE (3) FEET FROM PARALLEL UTILITIES. A ONE FOOT SEPARATION MUST BE MAINTAINED WHEN CROSSING OTHER UTILITIES.
4. THE MAXIMUM TRENCH DEPTH FOR GAS MAINS IS 48-INCHES WHILE THE MAXIMUM TRENCH DEPTH FOR SERVICES IS 36-INCHES.

GAS TRENCH

NOT TO SCALE

PLANNING BOARD APPROVAL

PLANNING BOARD CHAIR OR DESIGNEE DATE

No.	DATE	DESCRIPTION	DESIGNER	REVIEWER

SEAL
SHAWN M. MARTIN
No. 7487
12/9/22
REGISTERED PROFESSIONAL ENGINEER (CIVIL)

SEAL

SCALE:
HORZ.: AS NOTED
VERT.:
DATUM:
HORZ.:
VERT.:
0
GRAPHIC SCALE

FUSS & O'NEILL
317 IRON HORSE WAY, SUITE 204
PROVIDENCE, RI 02908
401.861.3070
www.fando.com

BRADY SULLIVAN PROPERTIES, LLC

DETAILS

BRISTOL YARN MILL

125 THAMES STREET BRISTOL, RHODE ISLAND

PROJ. No.: 20061150.A22
DATE: NOVEMBER 29, 2022

CD-509

SHEET 24 OF 26

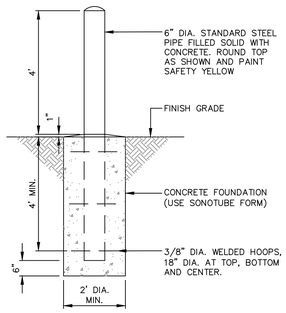

BOLLARD
NOT TO SCALE

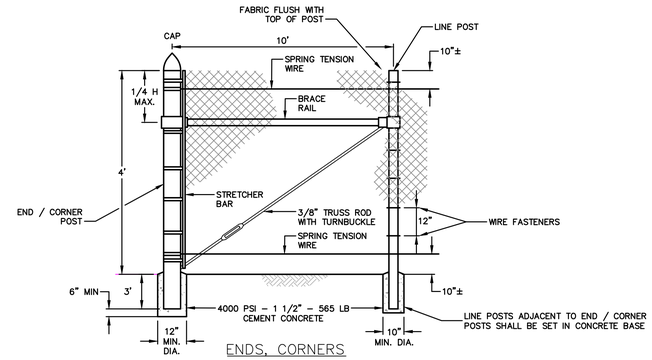

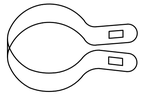

SPRING TENSION WIRE

MINIMUM OF (5) TURNS AROUND THE SPRING TENSION WIRE TO END INSTALLATION. ALL BANDS SHALL BE ROUND ON ROUND POSTS.

END BAND

NOTES:

1. FABRIC FOR FENCE: TOP SELVAGE TO HAVE KNUCKLED FINISH, BOTTOM SELVAGE TO HAVE TWISTED AND BARBED FINISH UNLESS OTHERWISE NOTED.
2. GRADE OF FENCE TO BE PARALLEL WITH THE GRADE OF GROUND.
3. FOR DESCRIPTION, MATERIAL AND CONSTRUCTION METHODS, SEE SPECIFICATIONS.
4. SPRING TENSION WIRE TO BE FASTENED TO FABRIC WITH 11 GAUGE HOG RINGS AT 1' INTERVALS.
5. SPRING TENSION WIRE TO BE FASTENED TO LINE POSTS WITH CLIPS.
6. LINE POST TO BE DRIVEN EXCEPT WHERE NOTED ABOVE.

CHAIN LINK FENCE
NOT TO SCALE

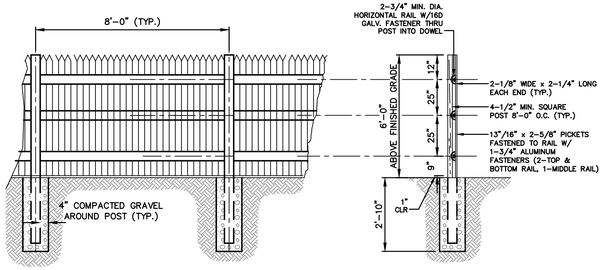

SCREENING FENCE

NOTES:

1. ALL FENCING MATERIAL SHALL BE PVC TO THE DIMENSIONS SHOWN ON THE DRAWING.
2. POSTS SHALL MAINTAIN A DEPTH OF 2'-10" IN GROUND AND SHALL BE RACKED TO ACCOMMODATE ANY CHANGES IN GRADE.
3. LINE OF FENCE TOP AND BOTTOM SHALL BE INSTALLED STRAIGHT AND TRUE. ALL POSTS AND FACING BOARDS OR SLATS SHALL BE INSTALLED PARALLEL AND PLUMB. ALL RAILS SHALL BE INSTALLED PARALLEL AND TRUE.
4. ALL GATE HARDWARE SHALL BE DOUBLE DIP HOT GALVANIZED.
5. FENCE SHALL TAPER FROM 6" TO 4' HEIGHT IN SINGLE 8' PANEL WHERE INDICATED ON PLANS.

STOCKADE FENCE
NOT TO SCALE

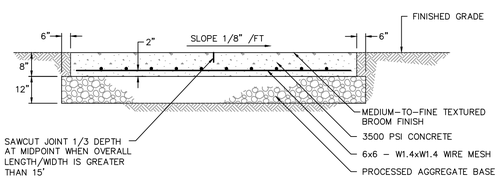

CONCRETE DUMPSTER PAD
NOT TO SCALE

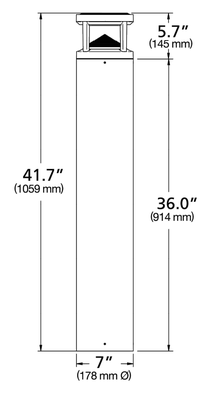

NOTES:

1. LIGHT BOLLARD SHALL BE PAVILION BOLLARD PA7R MANUFACTURED BY KIM LIGHTING.
2. BOLLARD SHALL HAVE A FLAT TOP WITH NO UPLIGHT. A LIGHT ENGINE WITH THE SPECIFICATIONS OF 22W, 4000K, 70CRI, AND A VOLTAGE OF 120-277V.
3. FINISH SHALL BE APPROVED BY OWNER.

LIGHT BOLLARD
NOT TO SCALE

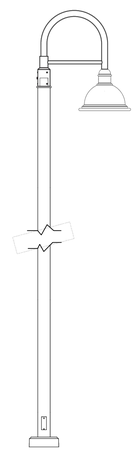

NOTES:

1. LIGHT FIXTURE SHALL BE 1521LED-R OMEGA MANUFACTURED BY STERNBERG LIGHTING.
2. FIXTURE SHALL HAVE A FLAT LENS, 16L LED RATING, 40K COLOR TEMPERATURE, DISTRIBUTION TYPE T4, A DRIVER MEETING THE SPECIFICATION OF 120-277V,180mA (MDL018), AND A BACK LIGHT OPTICAL CONTROL.
2. LIGHT POLE SHALL BE 550 CONCORD MANUFACTURED BY STERNBERG LIGHTING.
3. POLE SHALL BE STRAIGHT SMOOTH.
4. LIGHT POLE ARM SHALL BE OES/1-OESPT MANUFACTURED BY STERNBERG LIGHTING.
5. FINISH SHALL BE APPROVED BY OWNER.
6. MOUNTING HEIGHT SHALL BE 12 FEET.

LIGHT POLE & FIXTURE
NOT TO SCALE

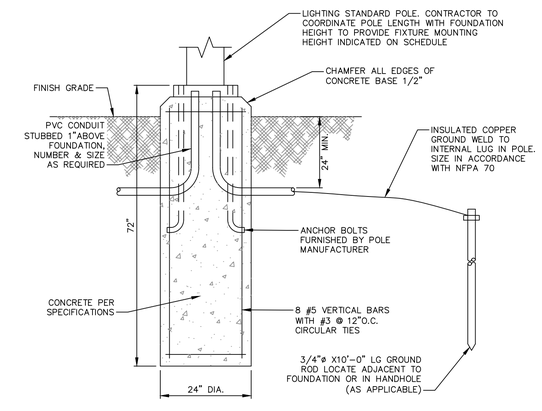

LIGHT POLE BASE
NOT TO SCALE

PLANNING BOARD APPROVAL

PLANNING BOARD CHAIR OR DESIGNEE DATE

No.	DATE	DESCRIPTION	DESIGNER	REVIEWER

SEAL
SHAWN M. MARTIN
No. 7487
REGISTERED PROFESSIONAL ENGINEER (CIVIL)

SEAL

SCALE: HORZ.: AS NOTED VERT.:
DATUM: HORZ.: VERT.:
0
GRAPHIC SCALE

FUSS & O'NEILL
317 IRON HORSE WAY, SUITE 204
PROVIDENCE, RI 02908
401.861.3070
www.fando.com

BRADY SULLIVAN PROPERTIES, LLC

DETAILS

BRISTOL YARN MILL

125 THAMES STREET BRISTOL, RHODE ISLAND

PROJ. No.: 20061150.A22
DATE: NOVEMBER 29, 2022

CD-510

SHEET 25 OF 26

Brentwood Bench
BNBR-6-BR-W

CANTERBURY DESIGNS
5632 W. Washington Blvd. | Los Angeles, CA 90016 | 323.936.7111
Website: www.canterburydesigns.com | E-mail: info@canterburydesigns.com

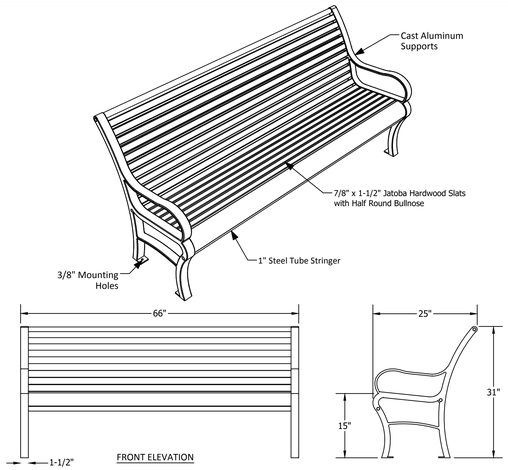

NOTES:
1. All metal components are sandblasted, cleaned, and finished with zinc epoxy primer and polyester powder coat.
2. Mounting holes are 3/8" diameter; we do not recommend pre-drilling bolt hole locations (anchor bolts not provided).
3. Other lengths and hardwood seating options (e.g., Ipe, Purpleheart) available upon request.
4. Support castings available in aluminum or iron.

BENCH
NOT TO SCALE

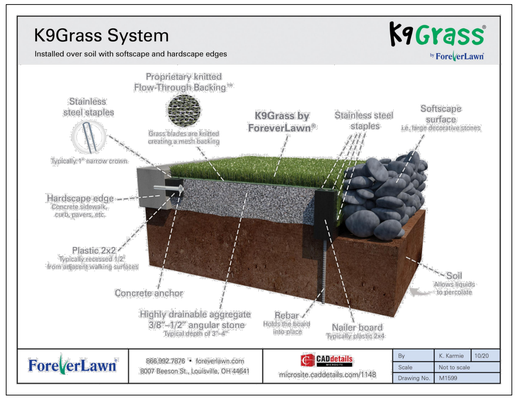

SYNTHETIC TURF
NOT TO SCALE

NOTE:

1. PERVIOUS CONCRETE SHALL COMPLY WITH ACI 522.
2. POROUS ASPHALT PAVEMENT SHALL COMPLY WITH NAPA ASPHALT PAVEMENTS FOR STORMWATER MANAGEMENT: DESIGN, CONSTRUCTION, AND MAINTENANCE GUIDE.
3. PERMEABLE CONCRETE PAVERS SHALL BE INSTALLED ACCORDING TO MANUFACTURER SPECIFICATIONS. AGGREGATE COURSE REQUIREMENTS MAY DIFFER.
4. PROTECT POROUS PAVEMENTS AND AGGREGATES FROM CONSTRUCTION VEHICLE TRAFFIC, RUNOFF FROM ADJACENT AREAS, AND SEDIMENTATION.

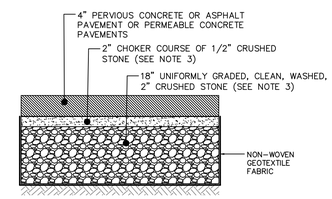

PERMEABLE PAVERS
NOT TO SCALE

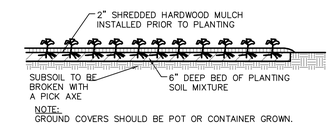

NOTE:
GROUND COVERS SHOULD BE POT OR CONTAINER GROWN.

GROUNDCOVER/ANNUAL PLUG PLANTING
NOT TO SCALE

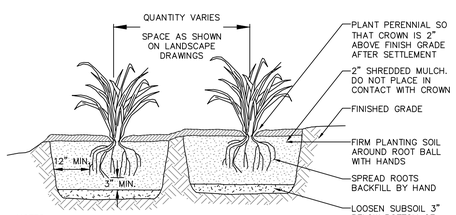

NOTES:
1. SPADED PLANTING SOIL MIX (3" BELOW ROOT BALL) ADD FERTILIZER WHEN MIXING. DO NOT COMPACT AFTER PLANTING.
2. WATER THOROUGHLY AFTER PLANTING.
3. PROVIDE WELL DRAINING SUBSOIL WHEN SOIL IS HEAVY OR COMPACTED.
4. FOR CONTAINER GROWN PLANTS, USE FINGERS OR SMALL HAND TOOLS TO PULL THE ROOTS OUT OF THE OUTER LAYER OF POTTING SOIL; THEN CUT OR PULL APART ANY ROOTS CIRCLING THE PERIMETER OF THE CONTAINER.

ORNAMENTAL PERENNIALS
NOT TO SCALE

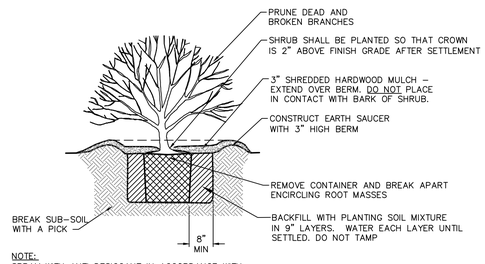

NOTE:
SPRAY WITH ANTI DESICCANT IN ACCORDANCE WITH MFG.'S RECOMMENDATIONS IF FOLIAGE IS PRESENT.

FOR CONTAINER GROWN SHRUBS, USE FINGERS OR SMALL HAND TOOLS TO PULL THE ROOTS OUT OF THE OUTER LAYER OF POTTING SOIL; THEN CUT OR PULL APART ANY ROOTS CIRCLING THE PERIMETER OF THE CONTAINER.

INCORPORATE COMMERCIALLY PREPARED MYCORRHIZA SPORES IN THE SOIL IMMEDIATELY AROUND THE ROOT BALL AT RATES SPECIFIED BY THE MANUFACTURER.

SHRUB PLANTING
NOT TO SCALE

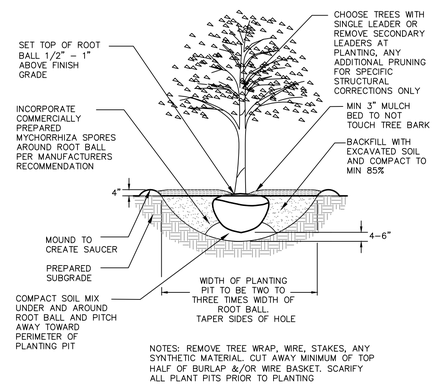

NOTES: REMOVE TREE WRAP, WIRE, STAKES, ANY SYNTHETIC MATERIAL. CUT AWAY MINIMUM OF TOP HALF OF BURLAP &/OR WIRE BASKET. SCARIFY ALL PLANT PITS PRIOR TO PLANTING

TREE PLANTING
NOT TO SCALE

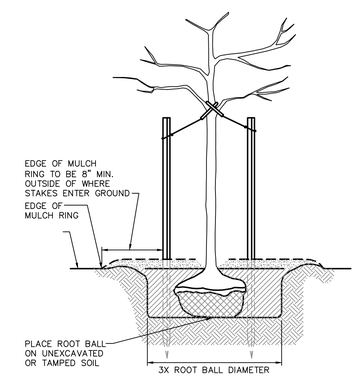

STAKE DETAIL
NOT TO SCALE

PLANNING BOARD APPROVAL

PLANNING BOARD CHAIR OR DESIGNEE DATE

No.	DATE	DESCRIPTION	DESIGNER	REVIEWER

SEAL
SHAWN M. MARTIN
No. 7487
12/9/22
REGISTERED PROFESSIONAL ENGINEER (CIVIL)

SEAL

SCALE:
HORZ.: AS NOTED
VERT.:
DATUM:
HORZ.:
VERT.:
0
GRAPHIC SCALE

FUSS & O'NEILL
317 IRON HORSE WAY, SUITE 204
PROVIDENCE, RI 02908
401.861.3070
www.fando.com

BRADY SULLIVAN PROPERTIES, LLC

LANDSCAPING DETAILS

BRISTOL YARN MILL

125 THAMES STREET BRISTOL, RHODE ISLAND

PROJ. No.: 20061150.A22
DATE: NOVEMBER 29, 2022

CD-511

SHEET 26 OF 26

FUSS & O'NEILL

Architectural Drawings

Brady Sullivan, 9 Sheets, 8/8/22

BUILDING AREAS:

AREA PER FLOOR:

LOWER:	65,460 SQFT
FIRST:	27,054 SQFT
SECOND:	71,365 SQFT
THIRD:	68,054 SQFT
FOURTH:	60,813 SQFT
TOTAL AREA: (GROSS)	292,746 SQFT

157 TOTAL PARKING SPACES
42 COMPACT SPACES
9 COMPACT MOTORCYCLE
24 COMPACT BICYCLE

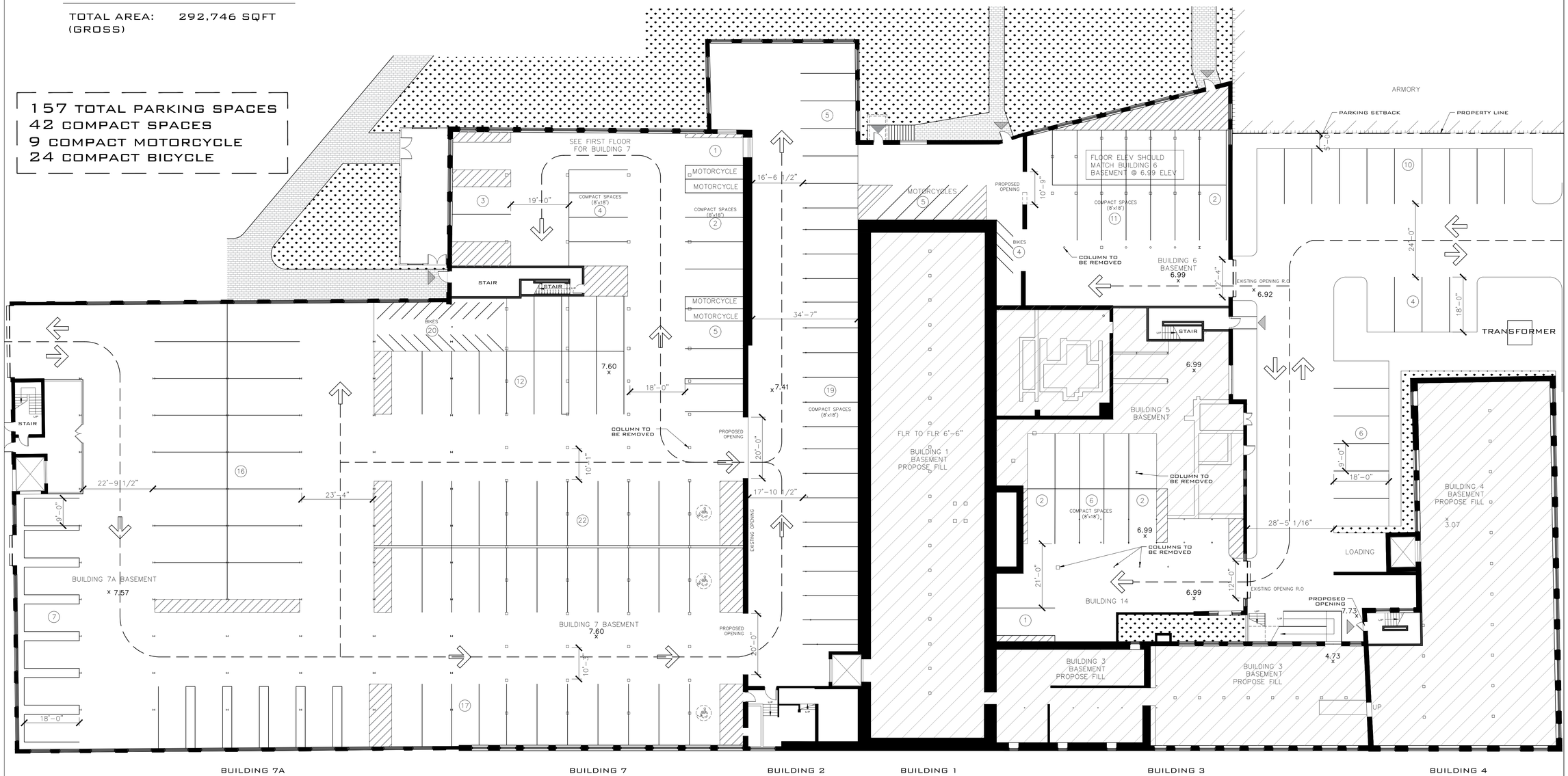

1 BASEMENT FLOOR PLAN
1/16" = 1'-0"

BRADY SULLIVAN PROPERTIES
670 N. COMMERCIAL ST.
MANCHESTER, NH 03101
P: 603.622.6223
F: 603.622.7342
WWW.BRADYSULLIVAN.COM

BRISTOL YARN MILL

125 THAMES ST BRISTOL, RHODE ISLAND

THESE DRAWINGS ARE IN DESIGN DEVELOPMENT. THEY ARE PROGRESS DRAWINGS. THEY ARE NOT INTENDED TO BE CONSTRUCTION DOCUMENTS AND SHOULD NOT BE USED FOR CONSTRUCTION.

No.	Description	Date

BASEMENT PARKING PLAN

Sheet Issue Date:	10/12/21
Project No.:	Project Number
Approved By:	Approver
Drawn By:	Author

A0-1

Scale: As indicated

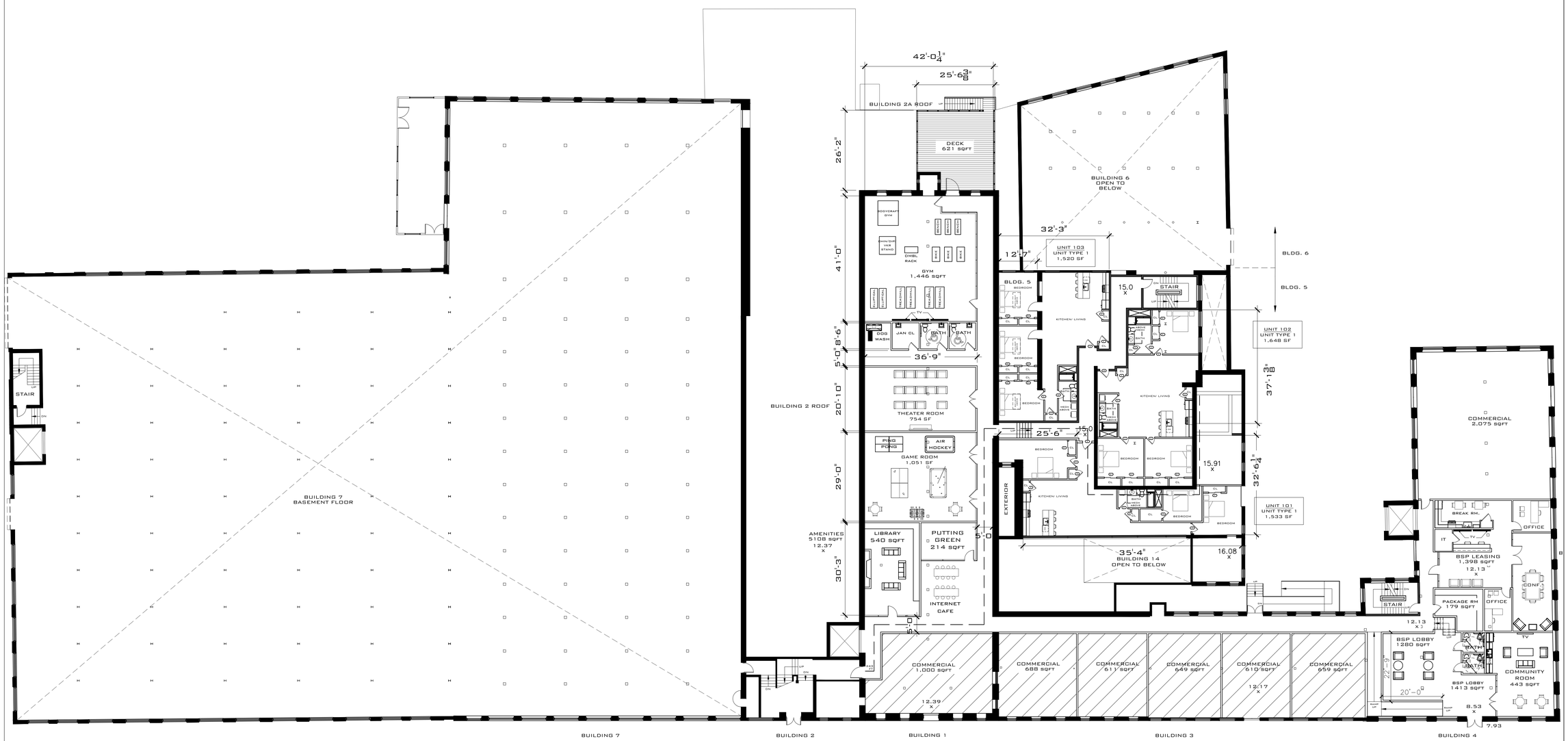

1 FIRST FLOOR PLAN 3 UNITS TOTAL
1/16" = 1'-0"

BRADY SULLIVAN PROPERTIES
670 N. COMMERCIAL ST.
MANCHESTER, NH 03101
P: 603.622.6223
F: 603.622.7342
WWW.BRADYSULLIVAN.COM

BRISTOL YARN MILL

125 THAMES ST BRISTOL, RHODE ISLAND

THESE DRAWINGS ARE IN DESIGN DEVELOPMENT. THEY ARE PROGRESS DRAWINGS. THEY ARE NOT INTENDED TO BE CONSTRUCTION DOCUMENTS AND SHOULD NOT BE USED FOR CONSTRUCTION.

No.	Description	Date
1	PRELIMINARY ELEVATIONS	5/02/19

FIRST FLOOR PLAN

Sheet Issue Date: 8/8/22
Project No.: Project Number
Approved By: Approver
Drawn By: Author

A0-2

Scale: As indicated

	1 BED/ 1 BATH	2 BED/ 1 BATH	2 BED/ 2 BATH	3 BED/ 1 BATH	3 BED/ 2 BATH	TOTAL
1ST FLOOR	0	0	0	2	1	3
2ND FLOOR	2	29	1	10	2	44
3RD FLOOR	2	27	1	11	1	42
4TH FLOOR	2	25	1	10	0	38
TOTAL	6	81	3	33	4	127

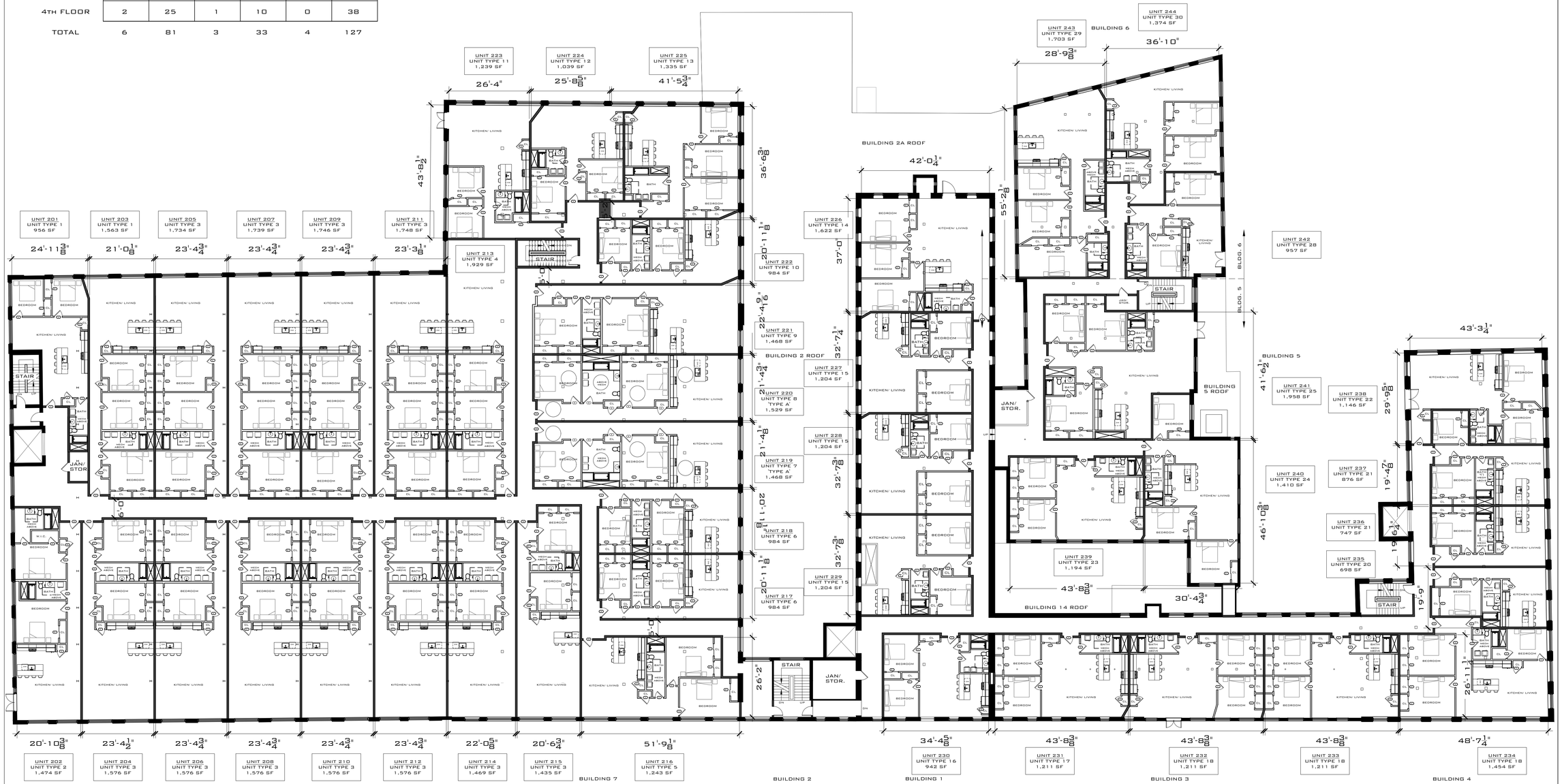

1 SECOND FLOOR PLAN
1/16" = 1'-0"

45 UNITS TOTAL

BRADY SULLIVAN PROPERTIES
670 N. COMMERCIAL ST.
MANCHESTER, NH 03101
P: 603.622.6223
F: 603.622.7342
WWW.BRADYSULLIVAN.COM

BRISTOL YARN MILL

125 THAMES ST BRISTOL, RHODE ISLAND

THESE DRAWINGS ARE IN DESIGN DEVELOPMENT. THEY ARE PROGRESS DRAWINGS. THEY ARE NOT INTENDED TO BE CONSTRUCTION DOCUMENTS AND SHOULD NOT BE USED FOR CONSTRUCTION.

No.	Description	Date
1	PRELIMINARY ELEVATIONS	5/02/19

SECOND FLOOR PLAN

Sheet Issue Date: 8/8/22
Project No.: Project Number
Approved By: Approver
Drawn By: Author

A0-3

Scale: As indicated

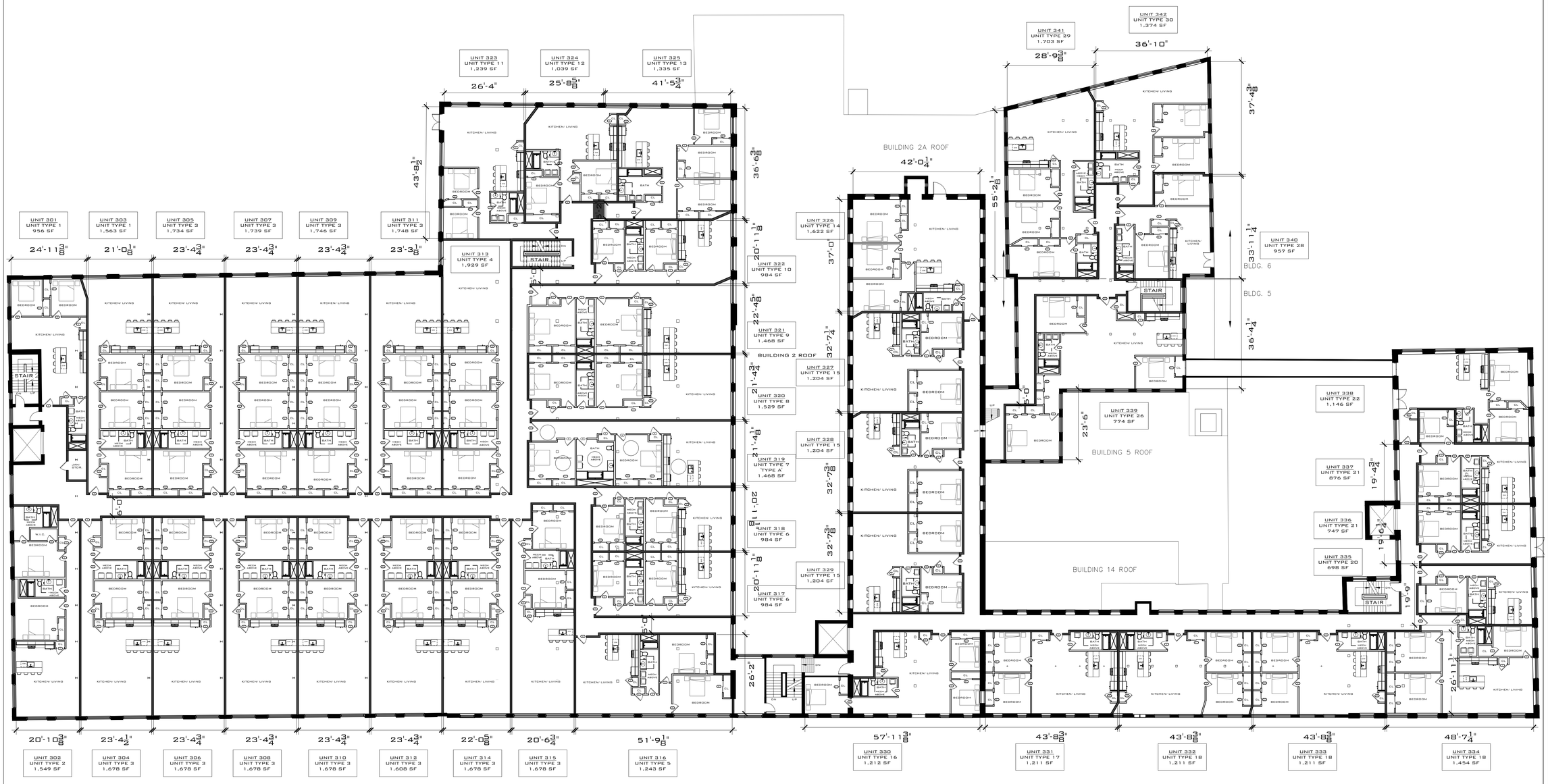

1 THIRD FLOOR PLAN
1/16" = 1'-0"

43 UNITS TOTAL

BRADY SULLIVAN PROPERTIES
670 N. COMMERCIAL ST.
MANCHESTER, NH 03101
P: 603.622.6223
F: 603.622.7342
WWW.BRADYSULLIVAN.COM

BRISTOL YARN MILL

125 THAMES ST BRISTOL, RHODE ISLAND

THESE DRAWINGS ARE IN DESIGN DEVELOPMENT. THEY ARE PROGRESS DRAWINGS. THEY ARE NOT INTENDED TO BE CONSTRUCTION DOCUMENTS AND SHOULD NOT BE USED FOR CONSTRUCTION.

NO.	DESCRIPTION	DATE
1	PRELIMINARY ELEVATIONS	5/02/19

THIRD FLOOR PLAN

SHEET ISSUE DATE: 8/8/22
PROJECT NO.: PROJECT NUMBER
APPROVED BY: APPROVER
DRAWN BY: AUTHOR

A0-4

SCALE: AS INDICATED

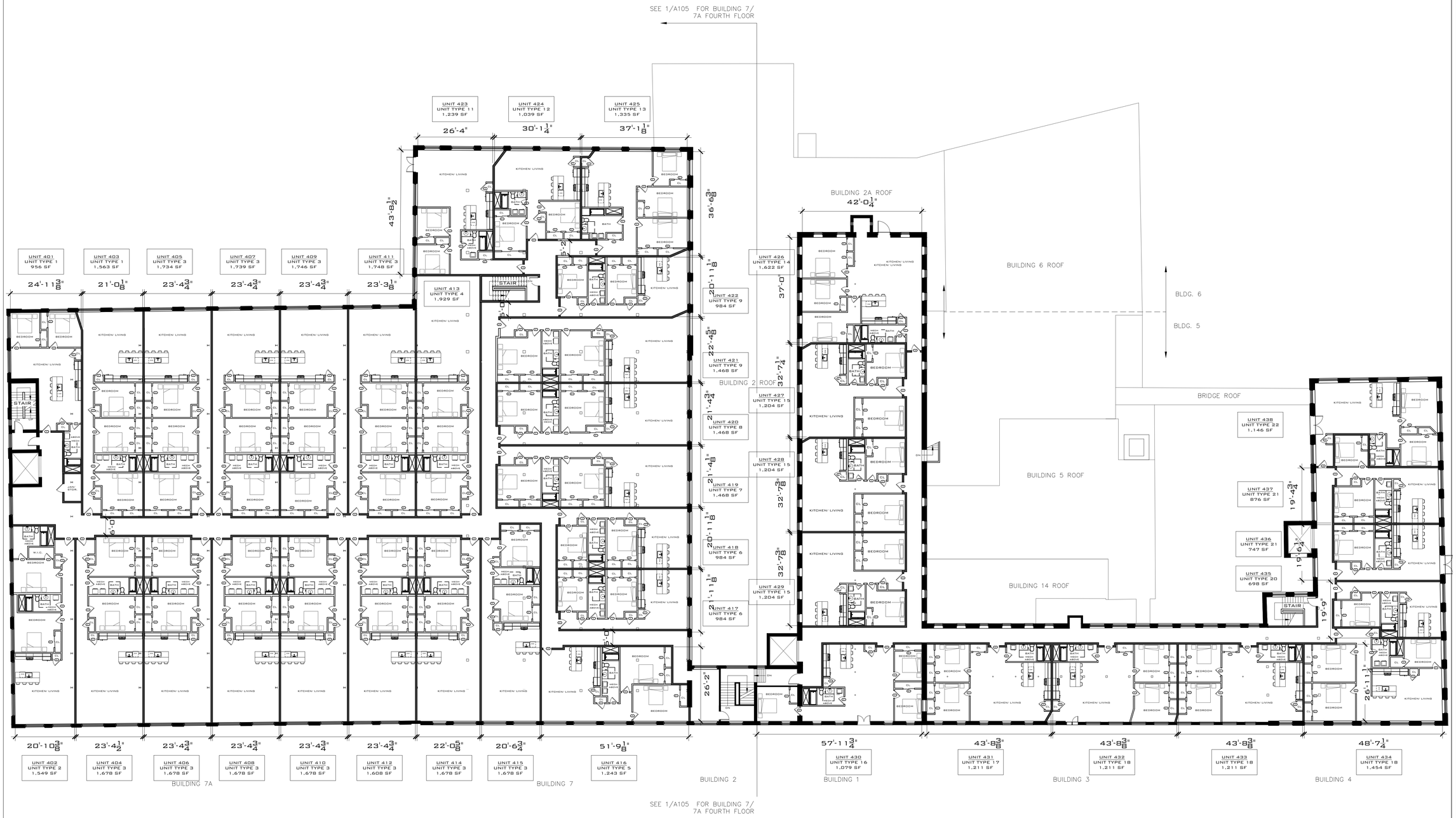

1 FOURTH FLOOR PLAN
1/16" = 1'-0"

39 UNITS TOTAL

BRADY SULLIVAN PROPERTIES
670 N. COMMERCIAL ST.
MANCHESTER, NH 03101
P: 603.622.6223
F: 603.622.7342
WWW.BRADYSULLIVAN.COM

BRISTOL YARN MILL

125 THAMES ST BRISTOL, RHODE ISLAND

THESE DRAWINGS ARE IN DESIGN DEVELOPMENT. THEY ARE PROGRESS DRAWINGS. THEY ARE NOT INTENDED TO BE CONSTRUCTION DOCUMENTS AND SHOULD NOT BE USED FOR CONSTRUCTION.

NO.	DESCRIPTION	DATE
1	PRELIMINARY ELEVATIONS	5.02.19

FOURTH FLOOR PLAN

SHEET ISSUE DATE: 8/8/22
PROJECT NO.: PROJECT NUMBER
APPROVED BY: APPROVER
DRAWN BY: AUTHOR

A0-5

SCALE: AS INDICATED

2 PARTIAL EAST ELEVATION - A
1/8" = 1'-0"

3 PARTIAL EAST ELEVATION - B
1/8" = 1'-0"

BRADY SULLIVAN PROPERTIES
670 N. COMMERCIAL ST.
MANCHESTER, NH 03101
P: 603.622.6223
F: 603.622.7342
WWW.BRADYSULLIVAN.COM

BRISTOL YARN MILL

125 THAMES ST BRISTOL, RHODE ISLAND

THESE DRAWINGS ARE IN DESIGN DEVELOPMENT. THEY ARE PROGRESS DRAWINGS. THEY ARE NOT INTENDED TO BE CONSTRUCTION DOCUMENTS AND SHOULD NOT BE USED FOR CONSTRUCTION.

No.	Description	Date

EAST ELEVATION

Sheet Issue Date:	4/16/21
Project No.:	Project Number
Approved By:	Approver
Drawn By:	Author

A0-7

Scale: As indicated

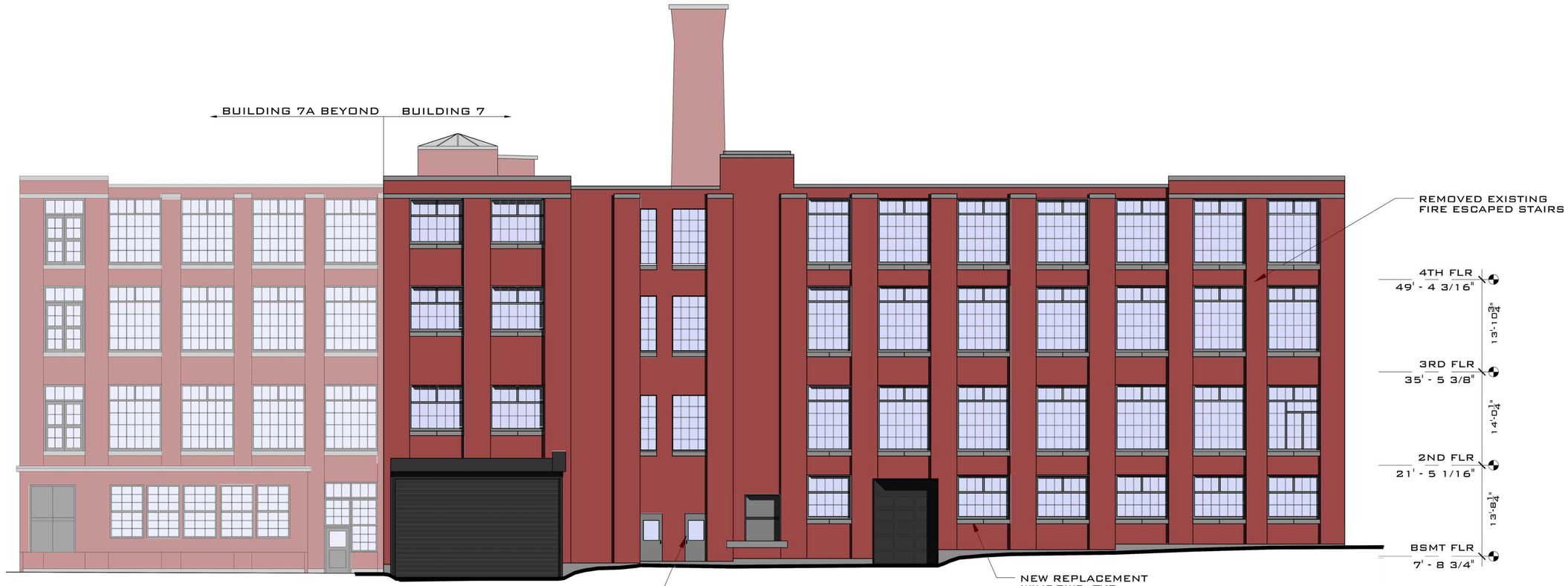

1 SOUTH ELEVATION
1/8" = 1'-0"

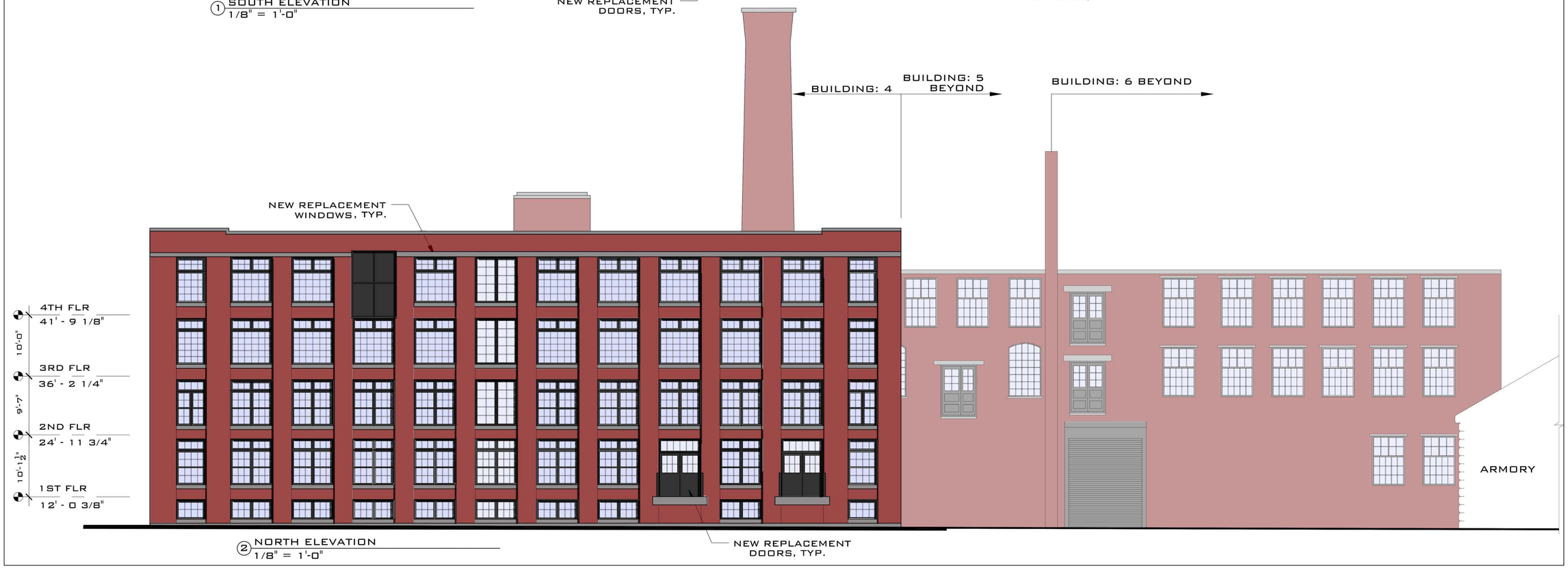

2 NORTH ELEVATION
1/8" = 1'-0"

BRADY SULLIVAN PROPERTIES
670 N. COMMERCIAL ST.
MANCHESTER, NH 03101
P: 603.622.6223
F: 603.622.7342
WWW.BRADYSULLIVAN.COM

BRISTOL YARN MILL

125 THAMES ST BRISTOL, RHODE ISLAND

THESE DRAWINGS ARE IN DESIGN DEVELOPMENT. THEY ARE PROGRESS DRAWINGS. THEY ARE NOT INTENDED TO BE CONSTRUCTION DOCUMENTS AND SHOULD NOT BE USED FOR CONSTRUCTION.

No.	Description	Date

NORTH & SOUTH ELEVATION

Sheet Issue Date:	4/16/21
Project No.:	Project Number
Approved By:	Approver
Drawn By:	Author

A0-9

Scale: As indicated

2 PARTIAL WEST ELEVATION - A
1/8" = 1'-0"

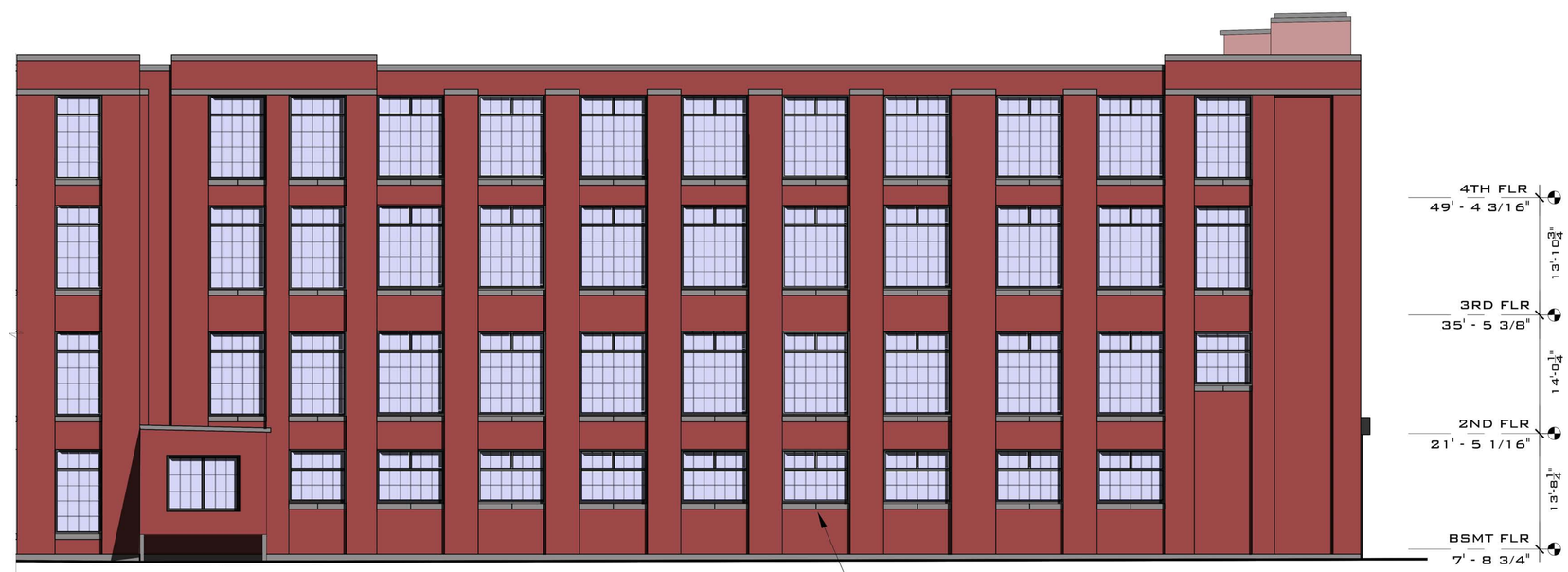

3 PARTIAL WEST ELEVATION - B
1/8" = 1'-0"

BRADY SULLIVAN PROPERTIES
670 N. COMMERCIAL ST.
MANCHESTER, NH 03101
P: 603.622.6223
F: 603.622.7342
WWW.BRADYSULLIVAN.COM

BRISTOL YARN MILL

125 THAMES ST BRISTOL, RHODE ISLAND

THESE DRAWINGS ARE IN DESIGN DEVELOPMENT. THEY ARE PROGRESS DRAWINGS. THEY ARE NOT INTENDED TO BE CONSTRUCTION DOCUMENTS AND SHOULD NOT BE USED FOR CONSTRUCTION.

No.	Description	Date

WEST ELEVATION

Sheet Issue Date:	4/16/21
Project No.:	Project Number
Approved By:	Approver
Drawn By:	Author

A0-8

Scale: As indicated

VIEW LOOKING WEST (BEFORE)

VIEW LOOKING WEST (PROPOSED)

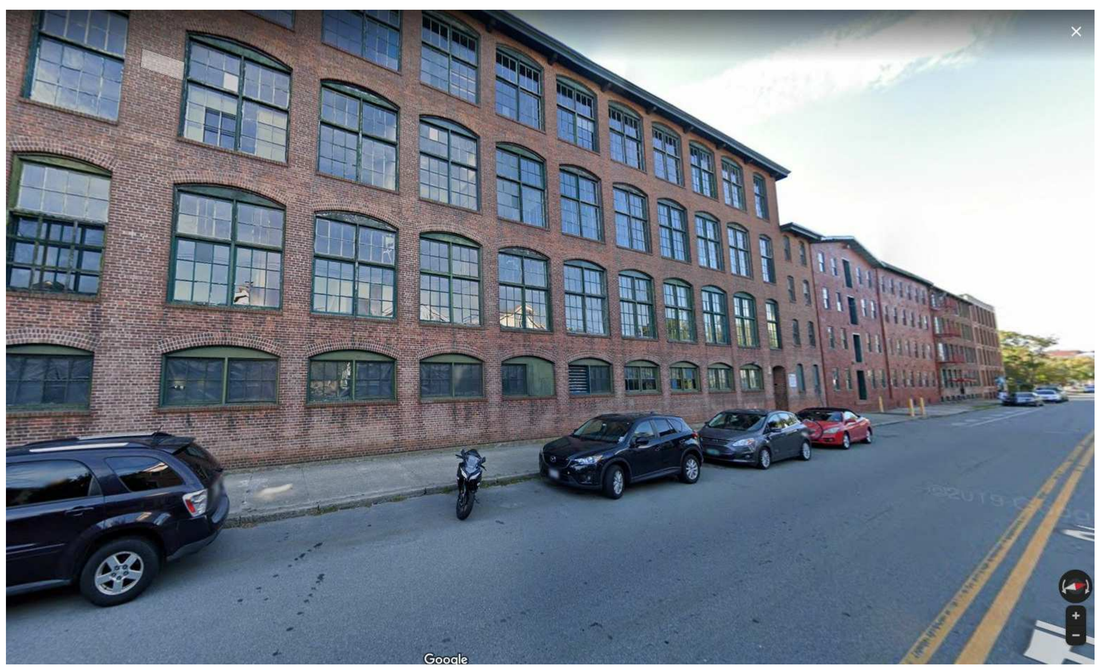

VIEW LOOKING NORTH WEST (BEFORE)

VIEW LOOKING NORTH WEST (PROPOSED)