# EXHIBIT A

| | | |
|---|---|---|
| **STATE OF SOUTH CAROLINA** | ) | |
| | ) | **AGREEMENT FOR SERVICES AND** |
| | ) | **CONVEYANCE OF REAL PROPERTY** |
| **COUNTY OF BEAUFORT** | ) | |

**THIS AGREEMENT FOR SERVICES AND DONATION OF REAL PROPERTY** ("***Agreement***") is made and entered into as of the latter date of execution below by and between the **TOWN OF BLUFFTON,** a South Carolina municipal corporation *(*the *"**Town**"),* **BEAUFORT COUNTY,** a political subdivision of the State of South Carolina (the *"**County**")*, and **SOUTHEASTERN PROPERTY DEVELOPMENT, LLC** and its subsidiaries **BC BUCKWALTER, LLC** and **BUCKWALTER PLACE ASSOCIATION, INC.** *(*collectively *"**SEDA**").* The Town, District, and SEDA may from time to time be referred to individually as a *"Party"* and collectively as the *"Parties."*

RECITALS:

**WHEREAS,** the Town of Bluffton Town Council (***"Town Council***") initially approved the Buckwalter Place Master Plan ("***BP Master Plan***") via majority vote on July 17, 2007, which is associated with real property located within the Town of Bluffton's jurisdiction. The BP Master Plan shows a right-of-way connecting Innovation Drive and Discovery Drive within Buckwalter Place ("***Connector Road***"); and,

**WHEREAS,** Buckwalter Place Association, Inc. currently owns the real property which contains the future right-of-way for the Connector Road consisting of approximately 25.36-acres, more or less, and identified as Beaufort County Tax Map No. R610 022 000 1101 0000, identified as Parcel G on the Plat in "**Exhibit A**" attached hereto and incorporated herein by reference; collectively hereinafter the "***Parent Parcel***"; and,

**WHEREAS,** the County, to address the transportation needs for the developing area adopted Transportation Impact Fees ("***Impact Fees***"), described in more detail herein, where said fees shall be used for specific projects including the Connector Road; and,

**WHEREAS,** the County and the Town entered into an agreement for the use of Impact Fees…..

**WHEREAS,** the Parties agree that the purpose of this Agreement is to permit the Parties to formalize the agreed upon responsibilities, covenants and obligations of each Party to fulfill the obligations established in the BP Master Plan to construct the Connector Road and complete the Project in a timely manner.

**NOW, THEREFORE**, for and in consideration of the mutual promises, undertakings and covenants set forth herein, the receipt and sufficiency of which are hereby acknowledged and affirmed, the Parties hereto agree as follows:

**I.** **RECITALS INCORPORATED**. The foregoing recitals are hereby incorporated as though fully set forth herein.

**II.** **THE PROJECT DEFINED.** The Parties agree that for purposes of this Agreement, the "***Project***" is defined as the construction of the Connector Road on and across the Parent Parcel as approved in the BP Master Plan and as further shown and detailed in the Exhibits attached hereto.

DRAFT

## III. PROJECT BACKGROUND.

a. *Buckwalter Place.* The Town of Bluffton Town Council initially approved the Buckwalter Place Master Plan via majority vote on July 17, 2007, which was last revised in April 2019 and as fully provided for in "**Exhibit B**", attached hereto and incorporated herein by reference. The initial Master Plan and its subsequent amendments show the Connector Road connecting the development to the northern development, initially known as Parcel C4 and now known as Washington Square. The developer of Washington Square constructed the portion of the Connector Road up to the shared property line with Buckwalter Place when installing its infrastructure. The portion of the Connector Road within Buckwalter Place, beginning at the intersection of Innovation Drive and Discovery Drive and ending at its intersection with the existing portion constructed by Washington Square, has yet to be constructed.

   SEDA obtained a Development Permit (DP-02-16-009495) from the Town on January 6, 2022, for the construction of the Connector Road, described in more detail in "**Exhibit C**", attached hereto and incorporated herein by reference.

b. *Connector Road Property and Existing Roads.* The general location of the Connector Road right-of-way is shown in the "Wetland Earthwork Plans for Connector Road to Parcel 4" provided in "**Exhibit D**", attached hereto and incorporated herein by reference.

   SEDA also owns a portion of two rights-of-way which intersect with the Connector Road known as Innovation Drive and Discovery Drive consisting of consisting of approximately 3-acres, more or less, and identified as Beaufort County Tax Map No. R610-029-000-1720-0000 (the "Existing Roads") as shown on the Plat attached as "**Exhibit E**", attached hereto and incorporated herein by reference.

c. *Beaufort County Impact Fees.* The County approved a Transportation Impact Fee Ordinance and its corresponding Support Study with Ordinance 2023/08 on March 13, 2023. Pursuant to Beaufort County Code Section 82-34 "Accounts and Expenditures", the Transportation Impact Fees may only be expended as follows:

   i. Beaufort County Code Section 82-34(b)(1) states that "expenditure of development impact fees shall be made only for the category of system improvements, and within or for the benefit of the service area, for which the development impact fee was imposed as shown by the relevant capital improvements plan and as authorized in the State Development Impact Fee Act".

   ii. Beaufort County Code Section 82-87 includes Table 82-87b: Road Facility Project South of the Broad River of the Impact Fee Ordinance, which identifies Buckwalter Parkway Access Management as a Capital Improvement Project. To identify transportation needs for this area, the County approved an updated Buckwalter Parkway Access Management Plan via Ordinance 2022/07 on February 28, 2022, and Town Council subsequently adopted the Plan via Resolution on March 8, 2022. The Access Management Plan, Figure 3B (Exhibit A) identifies the Connector Road as a Cross Access Connection. Therefore, the Connector Road is a qualified and approved project for which Transportation Impact Fees may be expended.

DRAFT

**IV.** **TERM AND SCHEDULE.** The Parties agree that SEDA shall commence construction of Connector Road no later than _____, 2025, and the Project shall be completed no later than _____, 2026. The Project shall be considered completed when SEDA obtains a certification of completion from _____ stating the work was completed and is in compliance with all State and local laws, regulations and requirements.

**V.** **PROJECT WORK.** The Parties acknowledge and agree that SEDA shall be solely responsible for all work related to the Project including, but not limited to, obtaining permits and approvals, site preparation, construction of Connector Road, and all other services and actions associated with and necessary to complete the Project.

**VI.** **PROJECT COST AND PAYMENT.**

a. *Project Cost.* SEDA has provided a breakdown of the costs associated with the Project, with a total cost of One Million Two Hundred Thousand ($1,200,000) Dollars; the details and breakdown of costs are fully shown in "**Exhibit F**", attached hereto and incorporated herein by reference; collectively hereinafter referred to as the "***Project Cost***". SEDA shall be solely responsible for the initial costs associated with the Project and shall be reimbursed for a portion of the Project Cost as established in this Agreement.

b. *Project Cost Reimbursement Amount.* The Parties acknowledge and agree to the Project Cost, and to those terms and conditions contained in this Agreement that may affect the amount associated with the Project Cost. The Parties agree to each individually be solely responsible for a third (1/3) of the Project Cost in an amount not to exceed Four Hundred Thousand ($400,000) Dollars except for any additional costs that are endured pursuant to the terms of this Agreement, specifically to include any Overage Costs as established in this Agreement.

c. *Request for Payment.* Following completion of the Project, whereby completion has occurred once the final approvals have been provided to SEDA by _____, SEDA shall provide separate written requests to the Town and to the County for payment of the Party's portion of the Project Costs. The required written request shall be made pursuant to Section X of this Agreement. The written request required in this Section shall include a complete breakdown of the total Project Cost.

d. *Project Cost Overages.* The Parties acknowledge and agree that cost overages may occur as the Project progresses due to unexpected cost inflation, unforeseen circumstances and environmental project delays. The Parties agree to cost overages in an amount not to exceed ten (10%) percent of the Project Cost shown in Exhibit F. If cost overages exceed ten (10%) percent of the Project Cost, then SEDA shall provide the Town and the County a written explanation of said overages prior to the expenses be incurred and shall obtain approval from the Town and County prior to incurring the expenses. Failure by SEDA to obtain said prior approval may result in the Town or the County not reimbursing SEDA for the overages. The Parties agree to each individually be solely responsible for a third (1/3) of any cost overages resulting from the terms and conditions in this section.

e. *Review of Project Cost.* Following a written request from SEDA pursuant to Section III(c), the Town and County shall have ten (10) business days to review the Project Cost breakdown and

DRAFT

provide a written request to SEDA for additional information or details associated with any or all of the Project Cost. SEDA must provide a written response to the aforementioned inquiry within ten (10) business days, failure to provide said response shall result in an automatic amendment to any cost dispute to the benefit of the Town or County.

f. *Payment by Parties.* Pursuant to Section III(a) of this Agreement, SEDA shall initially be responsible for the total cost of the Project. The Parties acknowledge and agree that SEDA is not required to pay any other Party any amount of funds for the Project Cost.

The Town and County shall provide payment to SEDA for its portion of the Project Cost within Forty-Five (45) days from either: 1) the date of the written request required in Section III(c), or 2) following completion of a review of the Project Cost established in Section III(d); whichever date comes later.

i. Form of Payment. The Parties acknowledge and agree that the Town and County shall remit payment to SEDA in the form of a written check and mailed to the address provided for in Section X of this Agreement.

**VII. CONVEYANCE OF RIGHT-OF-WAY.** The Parties acknowledge and agree that in order to allow the use of Impact Fees for the construction of the Connector Road, the right-of-way must be a public road which requires its transfer to a public entity. As the Project may impact the Existing Roads which may utilize Impact Fees, the Existing Roads should also be public roads owned by a public entity. Therefore, SEDA, specifically Buckwalter Place Association, Inc., agrees to convey a limited warranty deed to the Town prior to the start of construction, for a nominal consideration in the amount of Ten and 00/100 ($10.00) Dollars and exclusive of any development rights, the Connector Road and the Existing Roads pursuant to a separate Donation Agreement and approval by Resolution of Town Council. The Town shall be responsible for the cost of the necessary subdivision plat to create the Connector Road right-of-way and submit application for review and approval.

**VIII. RECORDS AND REPORTS.**

a. *Record Retention, Reports and Access.* The Parties shall maintain all records and reports connected with this Agreement and the Project for a period of at least four (4) years following the Effective Date. During the aforementioned retention period or at anytime during a term of this Agreement, the Town or County may request access to any and all records associated with this Agreement or the Project; and SEDA shall provide requested records within ten (10) business days from the date of receipt of the written request.

b. *Accounting Report.* SEDA acknowledges and understands that the funds associated with this Agreement are public monies and shall be used only for the purposes stated in this Agreement. SEDA agrees to comply with any and all requests from the Town or the County regarding accounting reports including, but not limited to, breakdown of Project Cost, payments to vendors, payments to contractors or payments for licenses or permits. Failure to provide the requested documents may result in the Town or County denying payment of the reimbursement for the Project Cost.

DRAFT

**IX.** **TERMINATION.** Any Party terminate this Agreement with or without cause, thirty (30) calendar days prior to commencement of construction of the Connector Road with a written notice to all other Parties. If thirty (30) calendar days prior to construction is initiated, then Town or the County terminate this Agreement, then SEDA shall be reimbursed for any expended funds that were included in the Project Cost. If SEDA terminates this Agreement at anytime, the Town nor the County shall be responsible for any costs associated with the Project nor required to provide any payments to SEDA for any Project Cost.

**X.** **NOTICES**. Whenever notice is required or permitted under the terms of this Agreement, it shall be in writing and personally delivered or sent postage or delivery charges prepaid by either (a) United States mail, certified, return receipt requested, in which case notice shall be deemed given on the certified date of delivery or rejection of delivery, or (b) by any national express delivery service which provides evidence of delivery. All notices shall be addressed to the following address (or at such other address as may hereafter be substituted by notice in writing thereof):

*The County*:
**Beaufort County**
Attn: Mike Moore, *Administrator*
100 Ribaut Road
Beaufort, SC 29902
Phone: 843.255.2000
Email: Mmoore@bcgov.net

*With Copy to:*
**Beaufort County Attorney**
Attn: Brian Hulbert
100 Ribaut Road
Beaufort, SC 29902
Phone: 843.255.2055
Email: brian.hulbert@bcgov.net

*The Town*:
**Town of Bluffton**
Attn: Stephen Steese, *Town Manager*
1 Town Center Court
Hilton Head Island, SC29928
Phone: 843-341-4600
Email: marco@hiltonheadislandsc.gov

*With Copy to:*
**Finger, Melnick, Brooks & LaBruce, P.A.**
Attn: Terry L. Finger, Esq.
P.O. Box 24005
Hilton Head Island, SC 29925
Phone: 843.681.7000
Emal: tfinger@fingerlaw.com

*To SEDA:*
**Southeastern Property Development, LLC**
Attn: _____
_____
_____
Ph. _____
Em. _____

*To SEDA:*
**BC Buckwalter, LLC**
Attn: _____
_____
_____
Ph. _____
Em. _____

*To SEDA*
**Buckwalter Place Association, Inc.**
Attn: _____
_____
_____
Ph. _____
Em. _____

DRAFT

**XI.** **COMPLIANCE WITH LAWS**. In execution of this Agreement, SEDA certifies and agrees that it is and shall continue to conduct all activities, construction and business in compliance with all applicable federal, state, and local laws, regulations and ordinances and to obtain and maintain all appropriate permits and consents. The terms of this Section shall survive termination of this Agreement. **Failure to comply with this Section and/or failure to construct the Connector Road in compliance with the applicable laws and regulations may result in partial or full denial of reimbursement by either the Town or the County, or both.**

a. *Conflict of Interest.* SEDA shall comply with all applicable conflict of interest laws, ordinances and regulations now in effect or hereafter to be enacted during the term of this Agreement. SEDA warrants that as of the Effective Date it is not aware of any facts that create a conflict of interest. If SEDA hereafter becomes aware of any facts that may reasonably be construed to create a conflict of interest, SEDA shall immediately inform the Town and County, and disclose all relevant facts in writing. Failure to comply with this Section shall be deemed a breach of the Agreement and may result in the immediate termination of the Agreement.

**XII.** **INDEMNIFICATION.** SEDA shall, at its cost and expense, protect, defend, indemnify and hold harmless the Town and County, its directors, officers, employees, and agents, from and against any and all demands, liabilities, causes of action, costs and expenses (including attorney's fees), claims, judgments, or awards of damages, arising out of or in any way resulting from the acts or omissions of SEDA, its directors, officers, employees, or agents, relating in any way to SEDA's performance under this Agreement.

**XIII.** **ASSIGNMENT.** The Parties understand and agree that SEDA may neither assign nor transfer any rights or obligations under this Agreement without the prior written consent of the Town and County a fully executed Assignment Agreement, approved by the Parties who executed and approved this original Agreement.

**XIV.** **NON-DISCRIMINATION.** The Parties certifies that in the performance of this Agreement, no Paty will not discriminate any person, client, or subcontractor on account of race, color, sex, age, religion, handicap, or national origin. It is the policy of the Town to comply with Title VI of the 1964 Civil Rights Act (Title VI) and its related statutes. To this end, the Town gives notice to all vendors or businesses that the Town assures full compliance with Title VI and its related statues in all programs, activities, and contracts. It is the policy of the Town that no person shall be excluded from participation in, denied the benefit of, or subjected to discrimination under any of its programs, activities, or contracts based on race, color, national origin, age, sex, disability, religion, or language. Pursuant to Title VI requirements, any entity that enters into a contract or agreement with the Town including, but not limited to vendors or businesses, may not discriminate based on race, color, national origin, age, sex, disability, religion, or language.

**XV.** **MISCELLANEOUS.**

a. *Relationship of the Parties*. Notwithstanding any provision hereof, for the purposes of this Agreement each Party is an independent party and nothing contained in this Agreement shall be construed as creating any agency, partnership, franchise, business opportunity, joint venture, or any other type of agency relationship. The Parties acknowledge, understand and

DRAFT

agree that this Agreement does not create a fiduciary relationship between the Parties nor does it create any obligations unless contained in the terms of this Agreement.

b. *Construction of Agreement.* Each Party acknowledges that it has participated in the negotiation and drafting of this Agreement. No provision of this Agreement shall be construed against or interpreted to the disadvantage of any Party hereto or thereto by any court by reason of such Party having or being deemed to have structured, dictated, or drafted any provision in the Agreement.

c. *Sole Agreement, Merger, and Amendments.* This Agreement contains all of the terms and conditions agreed to between the Parties and supersedes all prior agreements, and there are no oral agreements relating to the transaction covered hereby. All other discussions, proposals, agreements or offers are merged into this Agreement. This Agreement cannot be amended, altered, changed or modified unless each such alteration, amendment, change or modification shall have been set forth in writing in its entirety and signed and delivered by each Party.

d. *Counterparts.* This Agreement may be executed in one or more counterparts, all of which taken together shall constitute one and the same instrument.

e. *Good Faith.* The Parties shall act in good faith in performing and discharging their respective duties and obligations hereunder. Any provision requiring the approval of either Party shall not be unreasonably withheld. The Parties shall execute and deliver such other instruments and documents as reasonably may be necessary to implement and effectuate the terms of this Agreement.

f. *Waiver.* No provision, condition or covenant of this Agreement shall be waived by either Party hereto except by a written instrument delivered to the other Party and signed by the Party consenting thereto. If the Town fails to enforce any provision of this Agreement, that failure does not waive the provision or Town's right to enforce it.

g. *Successors and Assigns.* All provisions of this Agreement shall be binding on and inure to the benefit of each Party and each Party's respective heirs, executors, legal representatives, successors, successors in title and assigns.

h. *Time of the Essence.* Time is of the essence of this Agreement, although a request for additional time should not be unreasonably withheld when the additional time is needed by a Party to receive the approval and authority required by either local or state law.

i. *Captions.* The section headings appearing in this Agreement are for convenience of reference only and are not intended to any extent for the purpose, to limit or define the test of any section or any subsection hereof.

j. *Severability.* If any provision of this Agreement is held to be illegal, invalid or unenforceable, then this Agreement shall be construed and enforced as if such illegal, invalid or unenforceable provision had never comprised a part of this Agreement, and the remaining provisions of this Agreement shall remain in full force and effect and shall not be affected by the illegal, invalid or unenforceable provision or by its severance from this Agreement.

DRAFT

k. *Applicable Law.* This Agreement has been made in the State of South Carolina, and shall be interpreted in accordance with South Carolina law, and any enforcement of this Agreement shall be brought in the State of South Carolina.

**IN WITNESS WHEREOF**, the Parties hereto have affixed their signatures hereto on the Effective Date.

***Town of Bluffton:***
WITNESSES:

_____ _____

_____ **Stephen Steese**
*Town Manager*

***Beaufort County:***
WITNESSES:

_____ _____

_____ **Michael Moore**
*County Administrator*

***Southeastern Property Development, LLC:***
WITNESSES:

_____ _____

_____ _____

***BC Buckwalter, LLC:***
WITNESSES:

_____ _____

_____ _____

***Buckwalter Place Association, Inc.:***
WITNESSES:

_____ _____

_____ _____

DRAFT

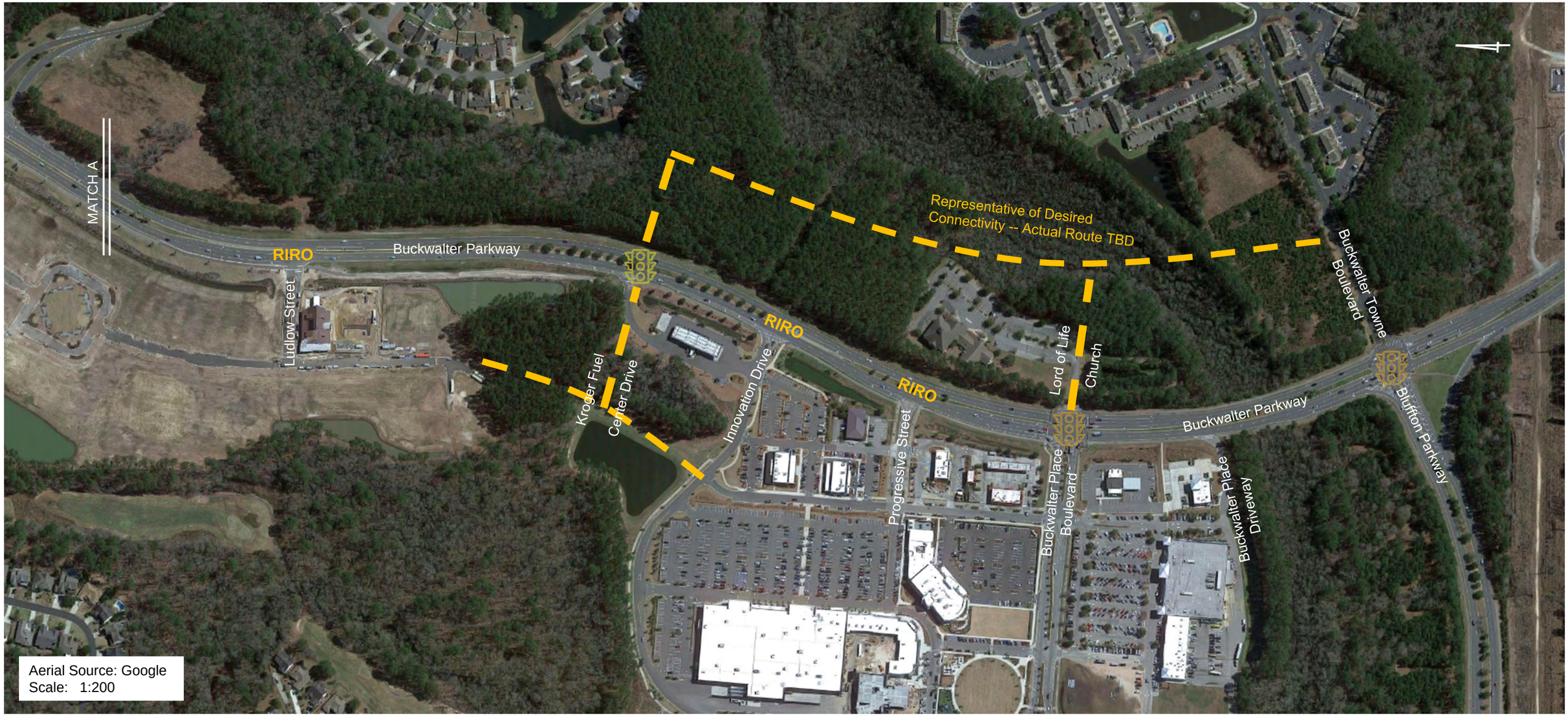


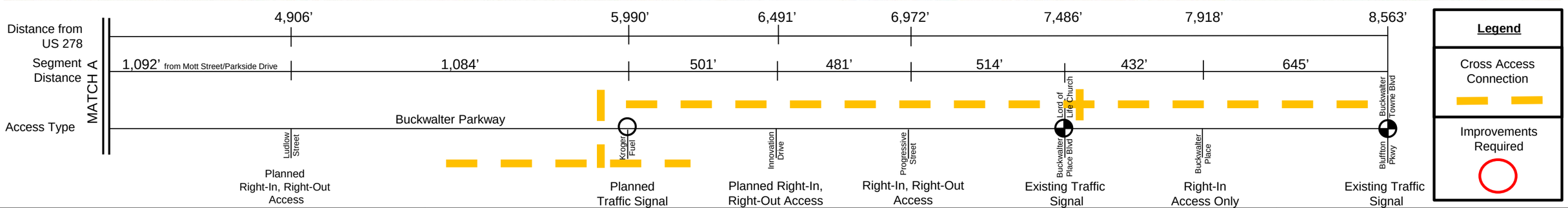


BIHL ENGINEERING

**Buckwalter Access Management Plan Update**

**Access Management Plan**

**Figure 3B**

AN EXHIBIT OF

# BUCKWALTER PLACE

(BEING A PORTION OF THE BUCKWALTER TRACT)

THE TOWN OF BLUFFTON
SOUTH CAROLINA

PREPARED FOR:

## PARCEL 6, LLC.

## EXHIBIT A

## DEVELOPMENT MASTER PLAN

PREPARED BY:

THOMAS & HUTTON ENGINEERING CO.
SAVANNAH, GEORGIA

LS3P ASSOCIATES, LTD.

EDWARD PINCKNEY ASSOCIATES, LTD.

JOB # 18838 SCALE: 1" = 200' DATE: AUGUST 28, 2006
REVISED: OCTOBER 16, 2006
REVISED: JUNE 11, 2007

GRAPHIC SCALE

200 0 100 200 400 800

( IN FEET )
1 inch = 200 ft.

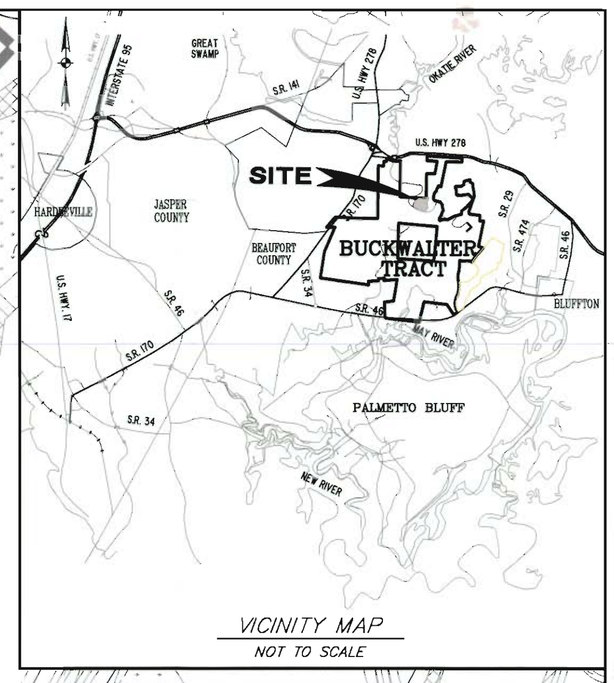


VICINITY MAP
NOT TO SCALE

NOTE: ROAD NAMES TO BE FINALIZED AT DEVELOPMENT PERMIT STAGE.

TOWN OF BLUFFTON APPROVED

## SITE DATA

| | |
|---|---|
| IMPERVIOUS AREA= 47.96% | |
| BUILDINGS | 16.12 AC |
| PAVING | 14.25 AC |
| SIDEWALKS | 6.42 AC |
| SWIMMING POOLS | 0.04 AC |
| LAGOONS | 2.88 AC |
| TOTAL | 39.71 AC |
| PERVIOUS AREA = 52.04% | |
| GRASSED AREAS | 11.85 AC |
| WETLAND BUFFER | 5.44 AC |
| WETLANDS | 25.80 AC |
| TOTAL | 43.09 AC |
| OPEN SPACE = 30.65% | |
| GRASSED AREAS | 11.85 AC |
| LAGOONS | 2.88 AC |
| BUFFERS(perimeter,wetland) | 10.65 AC |
| TOTAL | 25.38 AC |

## TOTAL AREA

| | |
|---|---|
| EXISTING UPLAND AREA | 54.40 ACRES |
| PERMITTED WETLAND FILL | 2.60 ACRES |
| TOTAL UPLAND AREA | 57.00 ACRES |
| WETLAND BUFFERS | 5.44 ACRES |
| NET UPLAND | 51.56 ACRES |
| TOTAL UPLAND AREA | 57.00 ACRES |
| WETLAND AREA | 25.80 ACRES |
| TOTAL SITE | 82.80 ACRES |
| PARKING SPACES PROVIDED | 5,392 SPACES |
| TOTAL | 86.33 ACRES |

## LEGEND

- GRASSED AREA
- PAVEMENT
- BUILDINGS
- LAGOONS
- WALKS
- AREA OF DEVELOPMENT BY OTHERS
- LEISURE TRAIL

PREPARED BY:

Witmer·Jones·Keefer Ltd.
landscape architecture land planning

DON RYAN
CENTER FOR INNOVATION

# BUCKWALTER PLACE COMMERCE PARK

## MASTER PLAN

BLUFFTON, SOUTH CAROLINA

APRIL 2019

TOWN OF BLUFFTON EST. 1825 SOUTH CAROLINA

NOTE: PLAN IS CONCEPTUAL IN NATURE AND SUBJECT TO CHANGE.

# TOWN OF BLUFFTON
# FINAL PLAN APPROVAL

**APPLICATION NO.:** DP-02-16-009495
**APPLICATION TYPE:** Development Plan

**ISSUE DATE:** 01/06/2022
**APPROVAL DATE:** 07/13/2016
**EXPIRATION DATE:** 07/13/2018

**PARCEL NO.**: R610 029 000 0786 0000
**PROPERTY ADDRESS**: 27 DISCOVERY DR, BLUFFTON SC 29910
**ZONING DISTRICT**: Planned Unit Development

**APPLICANT:** Carolina Engineering Consultants, Inc.

**OWNER:** Phil Madhere
BC Buckwalter LLC

**DESCRIPTION:**This approval is granted for a Development Plan for a Kroger and mixed use development located on the approx. 39 acres in the Buckwalter Place development. The project scope includes a Kroge grocery store, retail, restaurants, 124 multi family units, fuel center and a park. This approval is based on Site Development Plans prepared by Thomas and Hutton engineers, dated 5/13/2016 and Landscape Pla prepared by Wittmer, Jones Keefer dated June 30, 2016.
STATUS: DEVELOPMENT PLAN AMENDMENTAPPROVED 2/14/2017 based on Thomas & Hutton Engineer date stamped plans last modified January 10, 2017. AND Wittmer, Jones, Keefer dated July 22, 2016.
05/19/2020: An application for a Development Plan Amendment for construction of the TCL Culinary Instit has been submitted for review. Comments will be reviewed at the May 27 meeting of the DRC.
STATUS UPDATE: Re-submittal to address parking for the project is required Awaiting re-submittal.
STATUS 08/13/2020: Re-submittal application materials received. Comments will be provided by 8/21/2020.
STATUS 08/27/2020: Re-submittal to address comments received. The Amendment is approved with the following CONDITIONS OF APPROVAL:
STATUS 12/20/21: The Connector Road to Parcel 4 was on the agenda for the 12-20-21 DRC meeting an was subsequently approved without comments.

A shared parking agreement, recorded with Beaufort County, to provide parking for the TCL Culinary Institute will be required prior to the issuance of the Certificate of Occupancy for the building.

12/21/2021

TOWN OF BLUFFTON APPROVAL SIGNATURE

DATE

**The Applicant must schedule and host a Pre-Construction Meeting with Town Staff, the design engineer, the site general contractor, and any other necessary personnel involved in the horizontal construction. After the this meeting is conducted, the Applicant will be provided a Conditional Notice to Proceed authorizing the installation of tree protection fencing and erosion control devices. Upon installation of such fencing and devices, the Applicant must schedule Pre-Clearing and Stormwater Inspections of the completed work. Once approved by the Town, the Applicant will be provided a Notice to Proceed authorizing the commencement of horizontal construction as depicted in this Final Plan Approval.**

# WETLAND EARTHWORK PLANS

FOR

# CONNECTOR ROAD TO PARCEL 4

## BLUFFTON, SOUTH CAROLINA

PREPARED FOR:

BC BUCKWALTER, LLC

2473 PERIMETER PARKWAY BUILDING 100, SUITE 370, AUGUSTA, GA 30909

TM# R610-022-000-1101-0000

NOVEMBER 18, 2021

J-25125.0004

PREPARED BY:

THOMAS & HUTTON

SOUTH CAROLINA PROFESSIONAL ENGINEER No. 25353 NATHAN B. LONG

SOUTH CAROLINA THOMAS & HUTTON ENGINEERING CO. No. C00285 CERTIFICATE OF AUTHORIZATION

PERMIT SET - FOR REVIEW PURPOSES ONLY

WETLAND EARTHWORK
CONNECTOR ROAD TO PARCEL 4
VERTICAL DATUM: NAVD 88

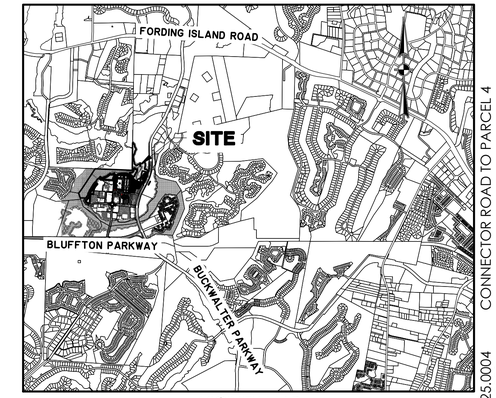


VICINITY MAP
SCALE: 1" = 3000'

J-25125.0004
11/18/2021
CONNECTOR ROAD TO PARCEL 4

PERMIT SET - FOR REVIEW PURPOSES ONLY

Sheet List Table

| Sheet Number | Sheet Title |
|---|---|
| CO | COVER SHEET |
| G1.1 | GENERAL NOTES AND SHEET INDEX |
| G2.1 | EXISTING CONDITIONS PLAN |
| C1.1 | LAYOUT PLAN |
| C2.1 | GRADING & DRAINAGE PLAN |
| C3.2 | GRADING & DRAINAGE DETAILS |
| EC1.1 | ES & PC NOTES |
| EC1.2 | ES & PC NOTES |
| EC2.1 | ES & PC PLAN - INITIAL PHASE |
| EC3.1 | ES & PC PLAN - INTERMEDIATE PHASE |
| EC4.1 | ES & PC PLAN - STABILIZATION PHASE |
| EC5.1 | ES & PC DETAILS |

REVISION HISTORY

| REV. NO. | REVISION | BY | DATE |
|---|---|---|---|
| | | | |

SUBMITTAL HISTORY

| SUBMITTED TO | DATE |
|---|---|
| TOWN OF BLUFFTON | 11/18/2021 |

811 Know what's below. Call before you dig.

THOMAS & HUTTON
50 Park of Commerce Way
Savannah, GA 31405
p.912.234.5300
www.thomasandhutton.com

# ABBREVIATIONS

| | | | | | | | |
|---|---|---|---|---|---|---|---|
| HDPE | HIGH DENSITY POLYETHYLENE | | FR | FRAME | | RCP | REINFORCED CONCRETE PIPE |
| BOT | BOTTOM | | GB | GRADE BREAK | | RJP | RESTRAINED JOINT PIPE |
| BFS | BEGIN FULL SUPER | | GI | GRATE INLET | | R/W | RIGHT-OF-WAY |
| BNC | BEGIN NORMAL CROWN | | GV | GATE VALVE | | RC | REVERSE CROWN |
| BNS | BEGIN NORMAL SHOULDER | | INV | INVERT ELEVATION | | SD | STORM DRAINAGE |
| BV | BUTTERFLY VALVE | | JB | JUNCTION BOX | | SDMH | STORM DRAINAGE MANHOLE |
| CI | CURB INLET | | LF | LINEAR FEET | | SF | SQUARE FEET |
| CV | CHECK VALVE | | LC | LEVEL CROWN | | SS | SANITARY SEWER |
| CPP | CORRUGATED PLASTIC PIPE | | LSM | LOW SHOULDER MATCH | | TC | TOP OF CONCRETE |
| DIP | DUCTILE IRON PIPE | | MAX | MAXIMUM | | TG | TOP OF GRAVEL |
| EL | ELEVATION | | MIN | MINIMUM | | TP | TOP OF PAVEMENT |
| EFS | END FULL SUPER | | MH | MANHOLE | | SW | TOP OF SIDEWALK |
| ENC | END NORMAL CROWN | | OC | ON CENTER | | TYP | TYPICAL |
| ENS | END NORMAL SHOULDER | | PC | POINT OF CURVE | | W | WATER |
| EOA | END OF ALIGNMENT | | PH | POST HYDRANT | | W/ | WITH |
| FG | FINISH GRADE | | PT | POINT OF TANGENT | | WV | WATER VALVE |
| FH | FIRE HYDRANT | | PVC | POLYVINYL CHLORIDE | | YI | YARD INLET |
| FM | FORCE MAIN (SANITARY SEWER) | | PV | PLUG VALVE | | | |

# HATCH LEGEND

| | |
|---|---|
| SUITABLE ROAD FILL | |
| WETLAND | |
| PRESERVED WETLAND BUFFER | |

# WATER LEGEND

| DESCRIPTION | EXISTING | PROPOSED |
|---|---|---|
| WATER MAIN | 10"W | 10"W |
| SINGLE SERVICE LATERAL | | |
| DOUBLE SERVICE LATERAL | | |
| VALVE AND BOX | | |
| FIRE HYDRANT W/VALVE & BOX | | |
| POST HYDRANT | | |
| REDUCER | | |
| BACKFLOW PREVENTOR | | |
| CROSS | | |
| TEE | | |
| 90° BEND - HORIZONTAL | | |
| 45° BEND - HORIZONTAL | | |
| 22-½° BEND - HORIZONTAL | | |
| 11-¼° BEND - HORIZONTAL | | |
| BEND - VERTICAL | | |
| CAP | | |

# DRAINAGE LEGEND

| DESCRIPTION | EXISTING | PROPOSED |
|---|---|---|
| PIPE | | |
| DITCH | | |
| CURB INLET | | |
| GRATE INLET | | |
| JUNCTION BOX | | |
| OUTLET STRUCTURE | | |

# SEWER LEGEND

| DESCRIPTION | EXISTING | PROPOSED |
|---|---|---|
| GRAVITY PIPE | SS | |
| SINGLE SERVICE LATERAL | | |
| DOUBLE SERVICE LATERAL | | |
| MANHOLE | | |
| CLEANOUT | | |
| | | |
| FORCEMAIN | 10"FM 10"FM | 10"FM 10"FM |
| VALVE AND BOX | | |
| FLUSH HYDRANT | | |
| REDUCER | | |
| BACKFLOW PREVENTOR | | |
| CROSS | | |
| TEE | | |
| 90° BEND - HORIZONTAL | | |
| 45° BEND - HORIZONTAL | | |
| 22-½° BEND - HORIZONTAL | | |
| 11-¼° BEND - HORIZONTAL | | |
| BEND - VERTICAL | | |
| PLUG | | |

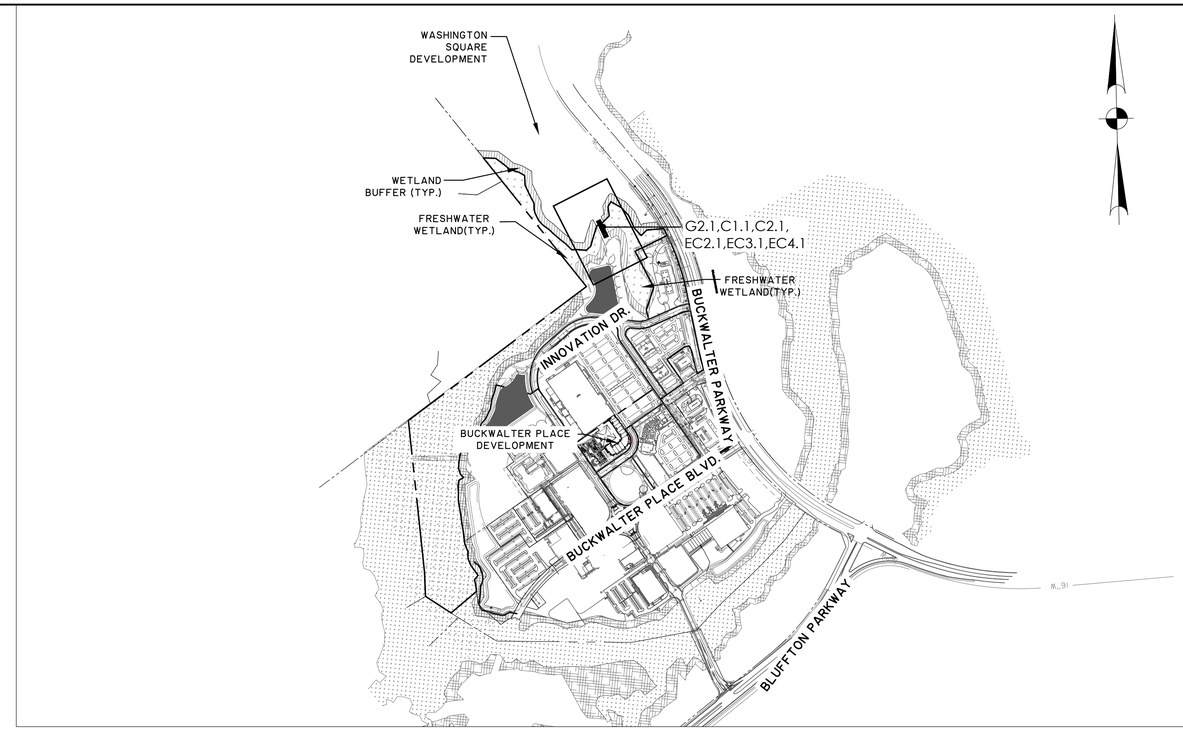


## INDEX

SCALE: 1" = 500'

# GENERAL NOTES

1. BOUNDARY AND TOPOGRAPHIC INFORMATION PROVIDED BY THOMAS AND HUTTON. ALL TOPOGRAPHIC INFORMATION IS BASED ON AVAILABLE LIDAR DATA USING NAVD88 VERTICAL DATUM. COORDINATES ARE BASED ON THE SOUTH CAROLINA STATE PLANE COORDINATE SYSTEM OF NAD 1983. VERIFY CHANGES IN ELEVATIONS IN ROADBEDS AND OTHER AREAS RESULTING FROM CONTRACTOR CLEARING AND STRIPPING.
2. SEE SURVEY CONTROL PLAN FOR BENCHMARKS. HORIZONTAL AND VERTICAL CONTROL SHOWN IN THESE PLANS ARE TO BE USED FOR ALL LAYOUT AND RECORD DATA FOR THIS PROJECT. IF DISCREPANCIES ARE FOUND CONTACT THOMAS AND HUTTON BEFORE PROCEEDING. IT IS THE CONTRACTOR'S RESPONSIBILITY TO ESTABLISH SUPPLEMENTAL CONTROL WITHIN THE PROJECT AS NEEDED. CONTRACTOR IS TO VERIFY ACCURACY OF ANY TEMPORARY BENCHMARKS SHOWN PRIOR TO UTILIZING THEM FOR CONSTRUCTION.
3. THE EXISTING UNDERGROUND UTILITIES SHOWN HEREON ARE BASED UPON AVAILABLE INFORMATION. THE CONTRACTOR SHALL BE RESPONSIBLE FOR DETERMINING THE EXACT LOCATION OF ALL UTILITIES ENCOUNTERED DURING CONSTRUCTION, CONTRACTOR SHALL COORDINATE ALL WORK WITH THE OWNER AND UTILITY COMPANIES. THE CONTRACTOR SHALL NOTIFY THE ENGINEER IMMEDIATELY WITH ANY DISCREPANCIES AND TAKE STEPS TO PROTECT THE LINE(S) AND ENSURE CONTINUED SERVICE. DAMAGE CAUSED TO EXISTING UTILITIES BY THE CONTRACTOR SHALL BE REPAIRED BY THE CONTRACTOR AT NO ADDITIONAL COST. ADDITIONALLY, THE CONTRACTOR SHALL CONFIRM THE CONNECTION POINTS OF NEW UTILITIES TO EXISTING UTILITIES PRIOR TO BEGINNING NEW CONSTRUCTION.
4. CONTRACTOR SHALL VERIFY EXISTING UTILITY ELEVATIONS AND INVERTS BEFORE STARTING WORK. THE CONTRACTOR SHALL NOTIFY ENGINEER IMMEDIATELY WITH DISCREPANCIES AND AWAIT WRITTEN RESPONSE FROM ENGINEER PRIOR TO PROCEEDING WITH INSTALLATION. EXISTING FRAMES, WITHIN DISTURBED LIMITS, SHALL BE ADJUSTED TO PROPOSED GRADES.
5. SHOULD PIPE, FITTINGS, AND OTHER MATERIALS BE NEEDED IN ADDITION TO THAT SHOWN ON THE DRAWINGS BECAUSE PIPELINE WAS NOT INSTALLED TO THE ALIGNMENT AND PROFILE SHOWN, THEN THE CONTRACTOR IS RESPONSIBLE FOR OBTAINING THOSE NECESSARY MATERIALS AND PROVIDING THE EQUIPMENT AND LABOR TO INSTALL THEM TO MEET THE DESIGN INTENT OF THE WATER MAIN AT NO ADDITIONAL COST TO THE OWNER.
6. THE CONTRACTOR SHALL NOTIFY THE OWNER AND THE ENGINEER 48 HOURS IN ADVANCE OF ALL REQUIRED TESTS AND OBSERVATIONS.
7. ALL WATER USED FOR CONSTRUCTION SHALL BE METERED THROUGH AN ACCEPTABLE BACK FLOW PREVENTION DEVICE AND FIRE HYDRANT METER.
8. REFER TO EROSION CONTROL SHEETS FOR NOTES REGARDING EROSION AND SEDIMENTATION CONTROL.
9. ALL SIGNAGE AND STRIPING SHALL BE COMPLETED PER SCDOT STANDARDS.
10. ALL TRAFFIC CONTROL SIGNS AND PAVEMENT MARKINGS SHALL BE IN ACCORDANCE WITH THE MANUAL ON "UNIFORM TRAFFIC CONTROL DEVICES FOR STREETS AND HIGHWAYS" AND "SOUTH CAROLINA MANUAL ON UNIFORM TRAFFIC CONTROL DEVICES" BOTH CURRENT EDITIONS.
11. ALL MATERIALS AND ACCESSORIES SHALL, UNLESS OTHERWISE DIRECTED, BE UNLOADED AND STORED WHERE THEY WILL BE PROTECTED AND WILL NOT BE HAZARDOUS TO TRAFFIC. THEY SHALL, AT ALL TIMES, BE HANDLED WITH CARE TO AVOID DAMAGE. THE INTERIOR OF ALL PIPES, FITTINGS, AND OTHER ACCESSORIES SHALL BE KEPT FREE FROM DIRT AND FOREIGN MATTER AT ALL TIMES. CLEAN THE INTERIOR OF ALL PIPES BY BRUSHING, SWABBING OR WASHING OUT BEFORE LAYING.
12. CONTRACTOR SHALL FLUSH ALL INLETS AND PIPE AT THE COMPLETION OF CONSTRUCTION TO REMOVE SILT AND DEBRIS. THE CLEANING AND FLUSHING OF INLETS AND PIPE (EXISTING AND PROPOSED) SHALL BE CONSIDERED PART OF THE COST FOR PIPE ON THE PROJECT. ALL DRAINAGE SYSTEMS TO WHICH PIPES ARE TO BE CONNECTED SHALL BE FLUSHED.
13. BACK FILL NECESSARY FOR THE CONSTRUCTION OF THIS PROJECT SHALL BE PROVIDED BY THE CONTRACTOR FROM ONSITE EXCAVATION SHOWN ON PLANS, OR SOURCES DEVELOPED BY THE CONTRACTOR AND CONFORMING TO THE CONTRACT SPECIFICATIONS. CONTRACTOR IS RESPONSIBLE FOR EXCAVATION, HAULING AND PLACING THE FILL AS SHOWN ON THE PLANS. GEOTECHNICAL CONSULTANT SHALL DETERMINE IF FILL MATERIALS ARE SUITABLE FOR FILL AREAS.
14. ALL ITEMS WHICH MUST BE REMOVED BY THE CONTRACTOR DURING CONSTRUCTION, INCLUDING EARTHWORK MATERIAL, AND WHICH ARE NOT SHOWN TO BE PAID FOR OTHERWISE, ARE TO BE REMOVED WITHOUT ADDITIONAL PAYMENT.
15. CONTRACTOR SHALL PROTECT OR RESET ALL EXISTING MARKERS AND PROPERTY CORNERS PRIOR TO FINAL PAYMENT. ALL REQUIRED MARKERS SHALL BE INSTALLED BY REGISTERED SURVEYOR IN THE STATE OF SOUTH CAROLINA.
16. CONTRACTOR TO REMOVE ALL EROSION AND SEDIMENTATION CONTROL DEVICES PRIOR TO FINAL PAYMENT. COSTS FOR REMOVAL OF THESE DEVICES SHALL BE INCLUDED IN THE CORRESPONDING LINE ITEM COST ON THE BID FORM.
17. ALL DAMAGE CAUSED BY CONSTRUCTION IS TO BE REPLACED AT THE CONTRACTOR'S EXPENSE.
18. IT IS THE OBLIGATION OF THE CONTRACTOR TO MAKE THEIR OWN INTERPRETATION OF ALL SURFACE AND SUBSURFACE DATA AVAILABLE AS TO THE NATURE AND EXTENT OF THE MATERIALS TO BE EXCAVATED, WASTED, GRADED AND COMPACTED. THE INFORMATION SHOWN ON THESE PLANS IN NO WAY GUARANTEES THE AMOUNT OR NATURE OF THE MATERIALS TO BE ENCOUNTERED.
19. THE CONTRACTOR SHALL NOT BEGIN CONSTRUCTION UNTIL THE PROPER PERMITS HAVE BEEN OBTAINED.
20. THE CONTRACTOR SHALL BE RESPONSIBLE FOR PHASING OF CONSTRUCTION AND THE COORDINATION, SEQUENCING AND SUPERVISION OF CONSTRUCTION ACTIVITIES. ANY AND ALL COSTS ASSOCIATED WITH PROJECT PHASING WILL BE BORNE IN FULL BY THE CONTRACTOR. NO SEPARATE PAYMENT WILL BE MADE FOR ITEMS, MATERIALS OR PERSONNEL NOT SPECIFICALLY LISTED ON THE BID FORM.
21. CONTRACTOR SHALL COORDINATE WITH AN OWNER DESIGNATED GEOTECHNICAL CONSULTANT TO ENSURE FILL PLACED IS SUITABLE FOR ROADWAY CONSTRUCTION AND IS PLACED IN LIFTS AS DEEMED APPROPRIATE BY THE GEOTECHNICAL ENGINEER.
22. EACH EXISTING ROAD WILL BE CLEANED UP AND RESTORED DAILY. COORDINATE WITH OWNER IF ROADWAY ACCESS CANNOT BE MAINTAINED PRIOR TO PROCEEDING WITH BLOCKAGE.
23. FRESHWATER WETLANDS EXIST IN THE PROJECT SITE. CONTRACTOR IS RESPONSIBLE FOR ADHERING TO ALL WETLAND AND WETLAND LINE BUFFERS THROUGHOUT CONSTRUCTION. CONTRACTOR SHALL OBTAIN A COPY OF WETLAND ARMY CORPS PERMIT #2001-IG-122 AND COMPLY WITH ALL REQUIREMENTS LISTED WITHIN WHEN PERFORMING WORK.
24. CONTRACTOR SHALL GRADE AREAS TO DRAIN FOR POSITIVE FLOW PRIOR TO FINAL ACCEPTANCE.
25. THE TOWN OF BLUFFTON STORMWATER DIVISION SHALL BE NOTIFIED AT LEAST 24 HOURS PRIOR TO ANY DEWATERING ACTIVITIES.
26. THE CONTRACTOR SHALL BE RESPONSIBLE FOR ACQUIRING ALL PERMITS AND LICENSES, AS REQUIRED BY BEAUFORT COUNTY AND/OR THE TOWN OF BLUFFTON ORDINANCES.
27. CONTRACTOR SHALL NOTIFY OWNER 45 DAYS IN ADVANCE, PRIOR TO BLOCKAGE OF EXISTING ROADWAY, TO ALLOW AMPLE TIME FOR ANY NOTIFICATIONS TO OTHERS.

# GENERAL INFORMATION

**PREPARED FOR:**

BC BUCKWALTER, LLC

**2473 PERIMETER PARKWAY, BUILDING 100**
**AUGUSTA, GA 30909**

UTILITIES:

WATER AND SEWER
BEAUFORT JASPER WATER AND SEWER AUTHORITY
6 SNAKE ROAD
OKATIE, SC 29909
843-987-9250

ELECTRIC
PALMETTO ELECTRIC COOPERATIVE, INC.
ONE COOPERATIVE WAY
HARDEEVILLE, SC 29927
843-208-5512

TELEPHONE AND CABLE
HARGRAY COMMUNICATIONS
5 BUCK ISLAND ROAD
BLUFFTON, SC 29910
843-815-1676

COUNTY: BEAUFORT COUNTY

MUNICIPALITY: TOWN OF BLUFFTON

ZONING: BUCKWALTER PUD

SURVEYOR: THOMAS & HUTTON
50 PARK OF COMMERCE WAY
SAVANNAH, GA 31405
(912) 234-5300

ENGINEER: THOMAS & HUTTON
50 PARK OF COMMERCE WAY
SAVANNAH, GA 31405
(912) 234-5300

STATE OF SOUTH CAROLINA — THOMAS & HUTTON ENGINEERING CORPORATION — No. C00285 — CERTIFICATE OF AUTHORIZATION

STATE OF SOUTH CAROLINA — NATHAN B. LONG — No. 25353 — REGISTERED PROFESSIONAL ENGINEER

PERMIT SET - FOR REVIEW PURPOSES ONLY

| NO. | REVISIONS | BY | DATE |
|---|---|---|---|
| | | | |


THOMAS & HUTTON
50 Park of Commerce Way
Savannah, GA 31405 • 912.234.5300
www.thomasandhutton.com


**BC BUCKWALTER, LLC**
BLUFFTON, SOUTH CAROLINA

CONNECTOR ROAD TO PARCEL 4

**GENERAL NOTES AND SHEET INDEX**

| | |
|---|---|
| JOB NO: | J-2525.0004 |
| DATE: | 11/18/2021 |
| DRAWN: | HAC |
| DESIGNED: | HAC |
| REVIEWED: | NBL |
| APPROVED: | NBL |
| SCALE: | AS SHOWN |

**G1.1**


Z:\2525\2525.0004\ENGINEERING\DRAWINGS\CONSTRUCTION PLANS\WETLAND EARTHWORK C4 PLANS\2525.0004 - G1.1.DWG - Nov 19, 2021 - 7:09 AM

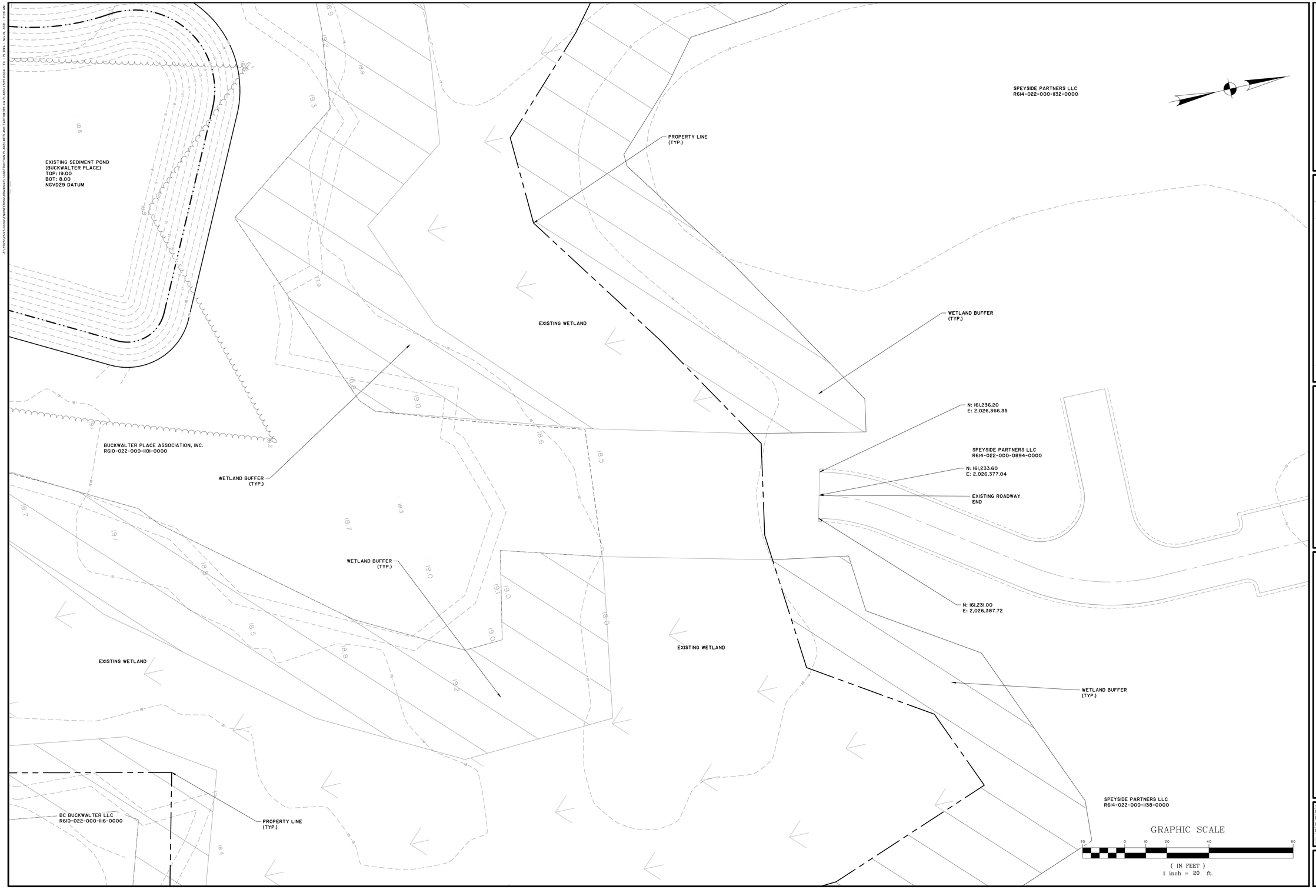


PERMIT SET - FOR REVIEW PURPOSES ONLY

| NO. | REVISIONS | BY | DATE |
|---|---|---|---|

THOMAS & HUTTON
50 Park of Commerce Way
Savannah, GA 31405 • 912.234.5300
www.thomasandhutton.com

**BC BUCKWALTER, LLC**
BLUFFTON, SOUTH CAROLINA

CONNECTOR ROAD TO PARCEL 4

**EXISTING CONDITIONS PLAN**

| | |
|---|---|
| JOB NO: | J-25125.0004 |
| DATE: | 11/18/2021 |
| DRAWN: | HAC |
| DESIGNED: | HAC |
| REVIEWED: | NBL |
| APPROVED: | NBL |
| SCALE: | 1" = 20' |

**G2.1**

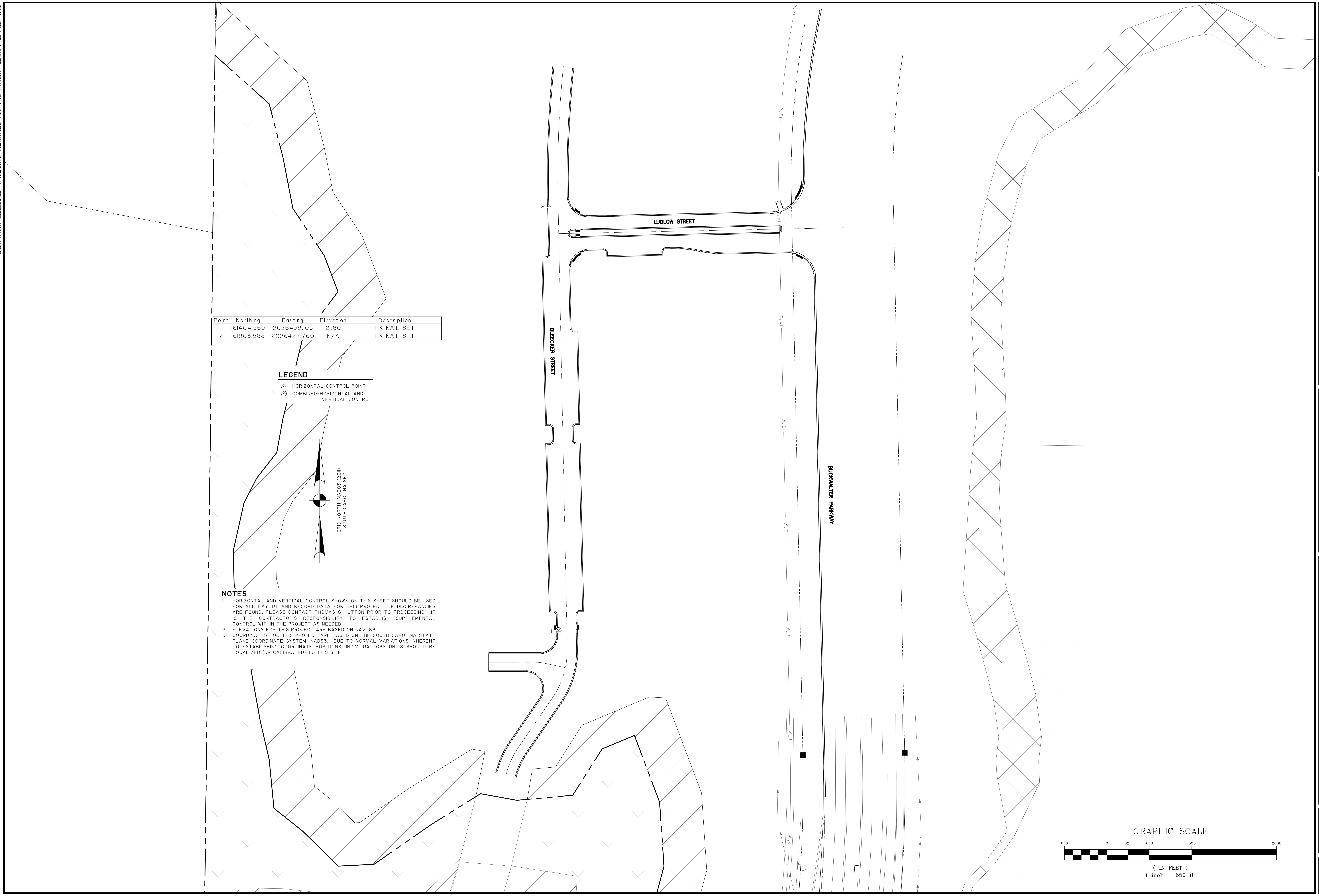


| Point | Northing | Easting | Elevation | Description |
|---|---|---|---|---|
| 1 | 161404.569 | 2026439.105 | 21.80 | PK NAIL SET |
| 2 | 161903.588 | 2026427.760 | N/A | PK NAIL SET |

## LEGEND

- HORIZONTAL CONTROL POINT
- COMBINED-HORIZONTAL AND VERTICAL CONTROL

## NOTES

1. HORIZONTAL AND VERTICAL CONTROL SHOWN ON THIS SHEET SHOULD BE USED FOR ALL LAYOUT AND RECORD DATA FOR THIS PROJECT. IF DISCREPANCIES ARE FOUND, PLEASE CONTACT THOMAS & HUTTON PRIOR TO PROCEEDING. IT IS THE CONTRACTOR'S RESPONSIBILITY TO ESTABLISH SUPPLEMENTAL CONTROL WITHIN THE PROJECT AS NEEDED.
2. ELEVATIONS FOR THIS PROJECT ARE BASED ON NAVD88.
3. COORDINATES FOR THIS PROJECT ARE BASED ON THE SOUTH CAROLINA STATE PLANE COORDINATE SYSTEM, NAD83. DUE TO NORMAL VARIATIONS INHERENT TO ESTABLISHING COORDINATE POSITIONS, INDIVIDUAL GPS UNITS SHOULD BE LOCALIZED (OR CALIBRATED) TO THIS SITE.

PERMIT SET - FOR REVIEW PURPOSES ONLY

REVISIONS

| NO. | REVISIONS | BY | DATE |
|---|---|---|---|

THOMAS & HUTTON
50 Park of Commerce Way
Savannah, GA 31405 • 912.234.5300
www.thomasandhutton.com

# BC BUCKWALTER, LLC

BLUFFTON, SOUTH CAROLINA

CONNECTOR ROAD TO PARCEL 4

## SURVEY CONTROL PLAN

| | |
|---|---|
| JOB NO: | J-25125.0004 |
| DATE: | 11/18/2021 |
| DRAWN: | HAC |
| DESIGNED: | HAC |
| REVIEWED: | NBL |
| APPROVED: | NBL |
| SCALE: | 1" = 50' |

V1.1

NOTE:
ROAD FILL TO BE SELECTED AND VERIFIED BY GEOTECHNICAL ENGINEER
PRIOR TO CONSTRUCTION. ROAD FILL SHALL BE SUITABLE FOR FUTURE ROADWAY USAGE.

EXISTING SEDIMENT POND
(BUCKWALTER PLACE)
TOP: 19.00
BOT: 8.00
NGVD29 DATUM

TO BUCKWALTER PLACE
DEVELOPMENT

FUTURE ROAD BED
(TYP.) - SUITABLE ROADWAY
FILL TO BE USED FOR ALL FILL

N: 161,110.91
E: 2,026,330.70

FUTURE CONNECTOR
ROAD CENTERLINE

N: 161,106.58
E: 2,026,346.10

N: 161,102.26
E: 2,026,361.51

N: 161,237.28
E: 2,026,361.47

CONNECT TO WASHINGTON SQUARE
EXISTING ROADWAY
N: 161,233.60
E: 2,026,377.04

N: 161,229.92
E: 2,026,392.61

16'
32'
16'
131'

TO WASHINGTON SQUARE
DEVELOPMENT

GRAPHIC SCALE

20 0 10 20 40 80

( IN FEET )
1 inch = 20 ft.

SOUTH CAROLINA
THOMAS & HUTTON ENGINEERING
No. C00285
CERTIFICATE OF AUTHORIZATION

SOUTH CAROLINA
PROFESSIONAL ENGINEER
No. 25353
NATHAN B. LONG

PERMIT SET - FOR REVIEW PURPOSES ONLY

| NO. | REVISIONS | BY | DATE |
|---|---|---|---|
| | | | |

THOMAS & HUTTON
50 Park of Commerce Way
Savannah, GA 31405 • 912.234.5300
www.thomasandhutton.com

**BC BUCKWALTER, LLC**
BLUFFTON, SOUTH CAROLINA

CONNECTOR ROAD TO PARCEL 4

**LAYOUT PLAN**

| | |
|---|---|
| JOB NO: | J-25125.0004 |
| DATE: | 11/18/2021 |
| DRAWN: | HAC |
| DESIGNED: | HAC |
| REVIEWED: | NBL |
| APPROVED: | NBL |
| SCALE: | 1" = 20' |

**C1.1**

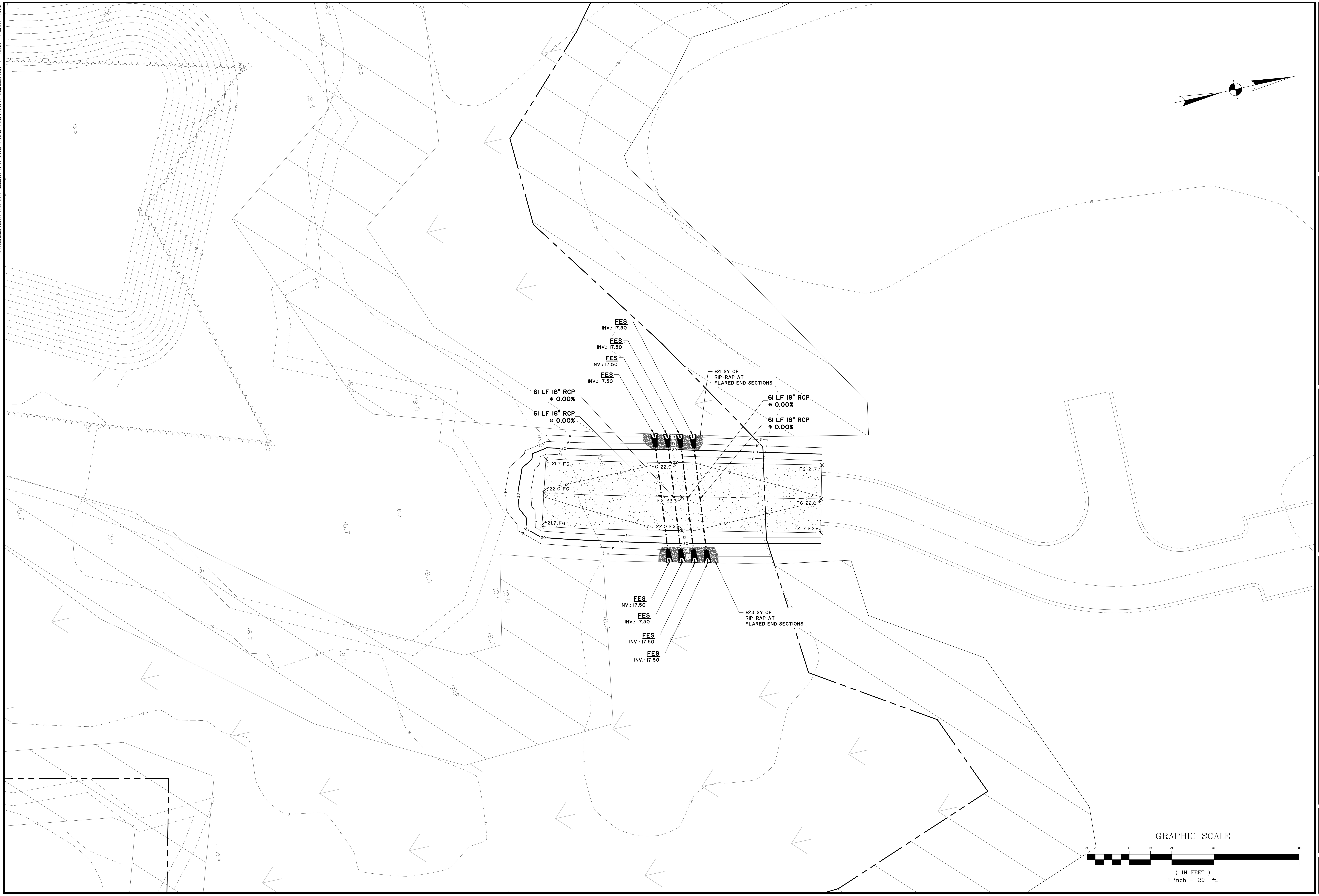


PERMIT SET - FOR REVIEW PURPOSES ONLY

| NO. | REVISIONS | BY | DATE |
|---|---|---|---|

THOMAS & HUTTON
50 Park of Commerce Way
Savannah, GA 31405 • 912.234.5300
www.thomasandhutton.com

**BC BUCKWALTER, LLC**
BLUFFTON, SOUTH CAROLINA

CONNECTOR ROAD TO PARCEL 4

**GRADING & DRAINAGE PLAN**

| | |
|---|---|
| JOB NO: | J-25125.0004 |
| DATE: | 11/18/2021 |
| DRAWN: | HAC |
| DESIGNED: | HAC |
| REVIEWED: | NBL |
| APPROVED: | NBL |
| SCALE: | 1" = 20' |

**C2.1**

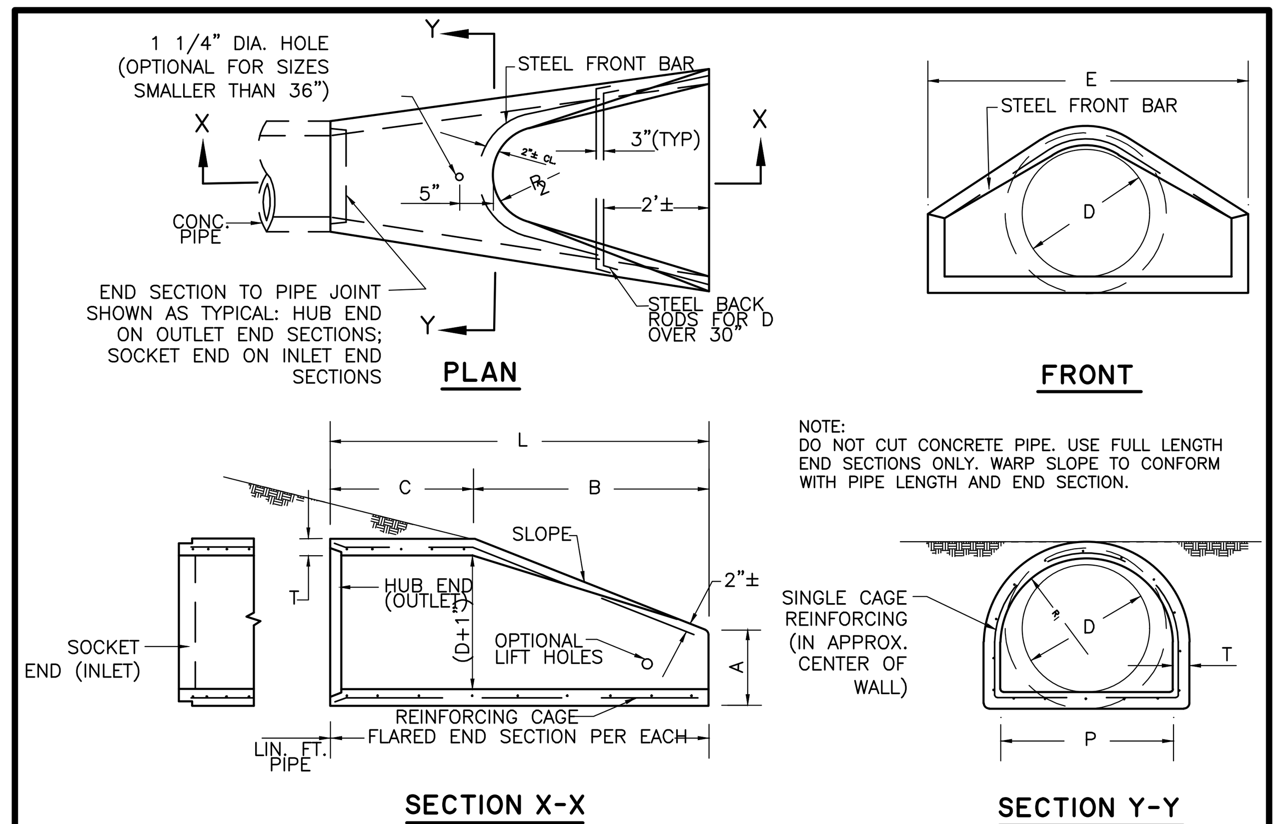


DIMENSIONS AND REINFORCING FOR CONCRETE FLARED END SECTIONS (± 1" TOLERANCE)

| PIPE DIA. | FRONT BAR | BACK RODS | SLOPE | A | B | C | L | E | P | R | R |
|---|---|---|---|---|---|---|---|---|---|---|---|
| 12" | 1-#3x5'-4" | NOT REQ'D. | 2.2:1 | 4" | 2'-0" | 4'-1" | 6'-1" | 2'-0" | 1'-8" | 10" | 9" |
| 15" | 1-#3x6'-0" | NOT REQ'D. | 2.2:1 | 6" | 2'-3" | 3'-10" | 6'-1" | 2'-6" | 2'-0" | 1'-0" | 11" |
| 18" | 1-#3x7'-2" | NOT REQ'D. | 2.2:1 | 9" | 2'-3" | 3'-10" | 6'-1" | 3'-0" | 2'-6" | 1'-4" | 1'-0" |
| 24" | 1-#3x9'-10" | NOT REQ'D. | 2.4:1 | 10" | 3'-8" | 2'-6" | 6'-2" | 4'-0" | 2'-9" | 1'-5" | 1'-2" |
| 30" | 1-#4x11'-8" | NOT REQ'D. | 2.4:1 | 12" | 4'-6" | 1'-8" | 6'-2" | 5'-0" | 3'-1" | 1'-6" | 1'-3" |
| 36" | 1-#4x13'-10" | 2'#4x6'-3" | 2.4:1 | 15" | 5'-3" | 2'-11" | 8'-2" | 6'-0" | 4'-0" | 2'-0" | 1'-8" |
| 42" | 1-#4x13'-10" | 2-#4x7'-4" | 2.4:1 | 21" | 5'-3" | 2'-11" | 8'-2" | 6'-6" | 4'-6" | 2'-4" | 1'-10" |

NOTE:
SPECIFIED REINFORCING IS MINIMAL AND MAY BE INCREASED AT PRODUCERS OPTION TO AID CASTING & HANDLING. ALTERNATE REINFORCEMENT PERMITTED IF ACCEPTABLE TO ENGINEER.

REINFORCING CAGE:
1. WIRE FABRIC HAVING SAME STEEL AREA AS INNER CAGE FOR CL. III PIPE, AASHTO M-170, BUT PLACED IN CENTER OF WALL.
2. ALTERNATE: #3 BARS SPACED 12"± LONGITUDINALLY WITH #2 BARS TRANSVERSELY AT 6" O.C. MAX. SPACING, SPOT WELDED OR TIED TO FORM CAGE.

NOTE:
CONTRACTOR WILL INFORM PRODUCER IF CONCRETE FLARED END SECTION IS FOR INLET OR FOR OUTLET END. SOCKET (TONGUE OR SPIGOT) END IS REQUIRED FOR INLETS. HUB (GROOVE OR BELL) END IS REQUIRED FOR OUTLETS. SOCKET TO SOCKET OR HUB TO HUB JOINT WILL NOT BE ACCEPTED UNLESS A REINFORCED CONCRETE COLLAR IS BUILT AROUND THE JOINT WITH NO PAYMENT BEING MADE FOR THE COLLAR. FLARED END SECTIONS SHALL BE JOINTED TO PIPE WITH ALL SPACE IN THE JOINT FILLED WITH PREFORMED PLASTIC GASKET (SEC.848). WALL THICKNESS (T) IS SHOWN AS NOMINAL AND MAY BE INCREASED AT PRODUCERS OPTION FOR DESIRED JOINT DESIGN OR TO ALLOW A FLAT OUTSIDE BOTTOM ON THE FLARE, WITH INSIDE DIMENSIONS OF FLARE RETAINED AS SHOWN.
T = PIPE WALL THICKNESS (0.08330+1"± TYPICAL).

**D110**
OCT. 2008
THOMAS & HUTTON ENGINEERING CO.

## CONCRETE FLARED END SECTION

NOT TO SCALE

NOTE:
SUITABLE ROAD FILL TO BE SELECTED AND VERIFIED BY GEOTECHINAL ENGINEER

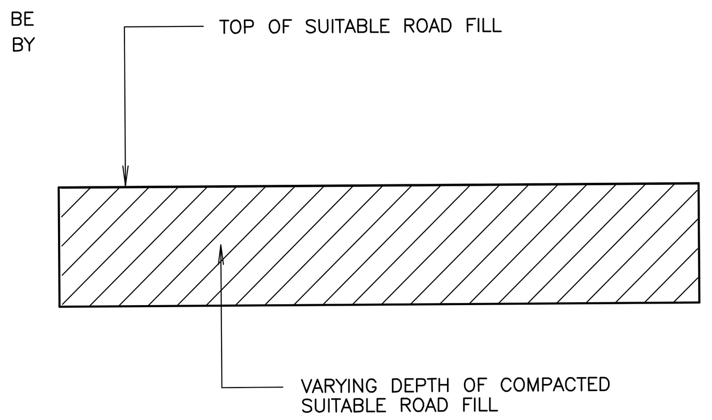


**P12**
OCT. 2008
THOMAS & HUTTON ENGINEERING CO.

## SUITABLE ROAD MATERIAL FILL SECTION

NOT TO SCALE

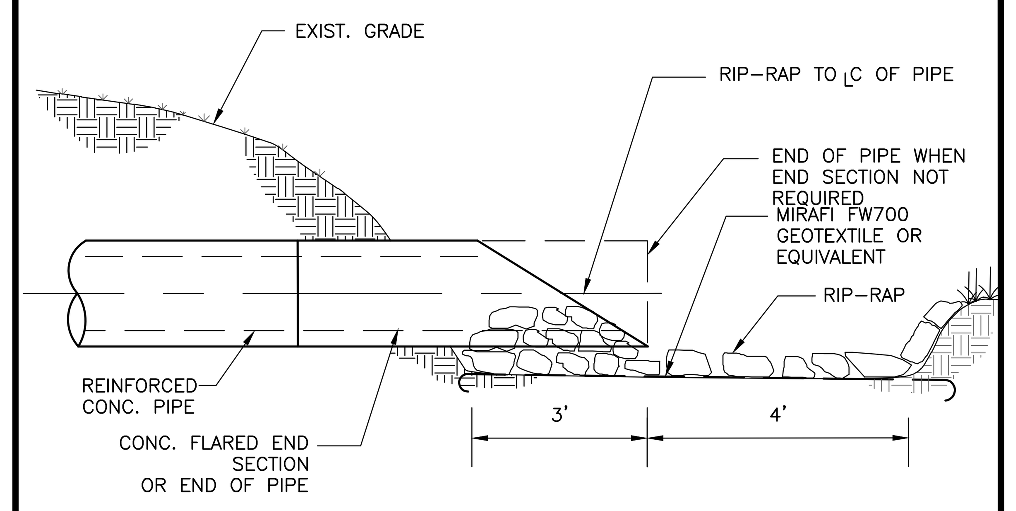


SECTION

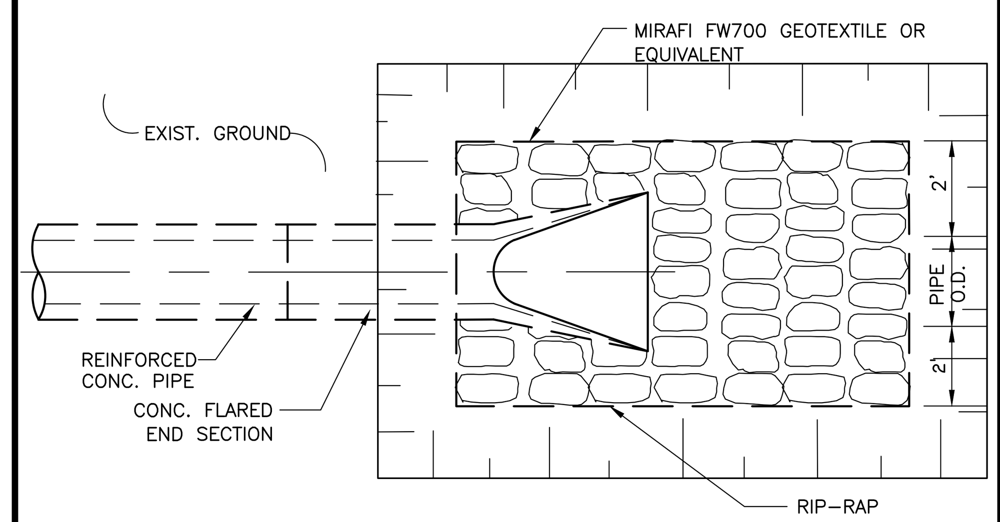


PLAN

**E5**
OCT. 2008
THOMAS & HUTTON ENGINEERING CO.

## DRAINAGE OUTFALL DETAIL

NOT TO SCALE

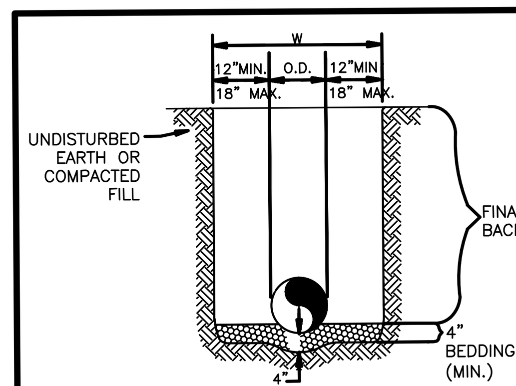


REINFORCED CONCRETE PIPE (RCP) AND SPIRAL RIB PIPE SMALLER THAN 60"ø

NOT TO SCALE

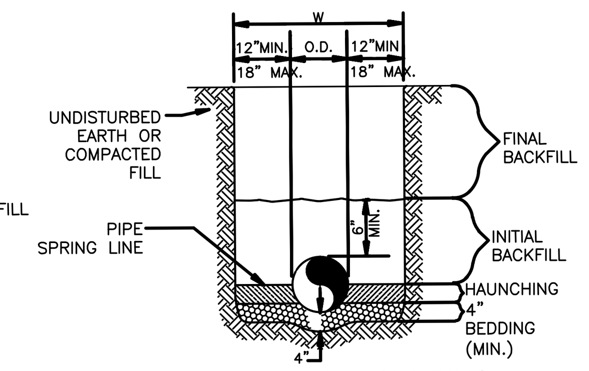


ALL OTHER PIPES INCLUDING SPIRAL RIB PIPE 60"ø AND LARGER

NOT TO SCALE

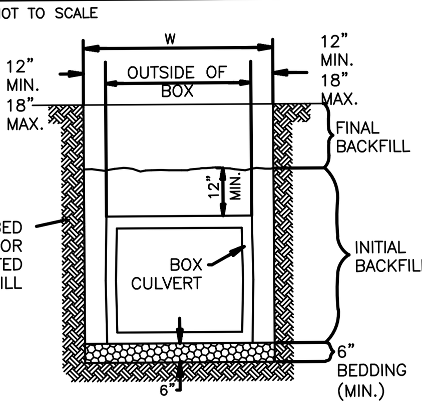


GENERAL NOTES

1. BEDDING SHALL BE CLASS I-A WORKED BY HAND. IF GROUNDWATER IS ANTICIPATED, THEN BEDDING SHALL BE CLASS I-B COMPACTED TO 85% STANDARD PROCTOR.
2. HAUNCHING SHALL BE WORKED AROUND THE PIPE BY HAND TO ELIMINATE VOIDS AND SHALL BE CLASS I-A OR CLASS I-B OR CLASS II COMPACTED TO 85% PROCTOR.
3. INITIAL BACKFILL SHALL BE CLASS I-A WORKED BY HAND, OR CLASS I-B OR CLASS II COMPACTED TO 85% STANDARD PROCTOR.

GENERAL NOTES- CONTINUED

4. INITIAL BACKFILL NOT UNDER PAVED AREAS CAN BE CLASS III COMPACTED TO 90% STANDARD PROCTOR.
5. FINAL BACKFILL SHALL BE CLASS I, II, OR III COMPACTED AS NOTED IN NOTES 3 AND 4.
6. FINAL BACKFILL NOT UNDER PAVED AREAS CAN BE CLASS IV-A COMPACTED TO 95% STANDARD PROCTOR.
7. ALL MATERIALS ARE CLASSIFIED IN ACCORDANCE WITH ASTM D 2321-LATEST EDITION.
8. ALL MATERIALS SHALL BE INSTALLED IN MAXIMUM 8" LOOSE LIFTS IN ACCORDANCE WITH ASTM D 698. CLASS III AND IV-A MATERIALS SHALL BE COMPACTED NEAR OPTIMUM MOISTURE CONTENT.
9. FILL SALVAGED FROM EXCAVATION SHALL BE FREE OF DEBRIS, ORGANICS AND ROCKS LARGER THAN 3".
10. ALL TRENCH EXCAVATIONS SHALL BE SLOPED, SHORED, SHEETED, BRACED, OR OTHERWISE SUPPORTED IN COMPLIANCE WITH OSHA REGULATIONS AND LOCAL ORDINANCES. (SEE SPECIFICATIONS)

**D127**
OCT. 2008
THOMAS & HUTTON ENGINEERING CO.

## CONCRETE BOX CULVERT

NOT TO SCALE

## STORM SEWER TRENCH AND BEDDING

NOT TO SCALE

PERMIT SET - FOR REVIEW PURPOSES ONLY

REVISIONS

| NO. | REVISIONS | BY | DATE |
|---|---|---|---|


THOMAS & HUTTON
50 Park of Commerce Way
Savannah, GA 31405 • 912.234.5300
www.thomasandhutton.com


BC BUCKWALTER, LLC
BLUFFTON, SOUTH CAROLINA

CONNECTOR ROAD TO PARCEL 4

GRADING & DRAINAGE DETAILS

| | |
|---|---|
| JOB NO: | J-25125.0004 |
| DATE: | 11/18/2021 |
| DRAWN: | HAC |
| DESIGNED: | HAC |
| REVIEWED: | NBL |
| APPROVED: | NBL |
| SCALE: | NTS |

# C3.2

Z:\25125\25125.0004\ENGINEERING\DRAWINGS\CONSTRUCTION PLANS\WETLAND EARTHWORK C4 PLANS\25125.0004 - ES & PC NOTES.DWG - Nov 19, 2021 - 7:12 AM

# STORMWATER POLLUTION PREVENTION PLAN

## I. SITE DESCRIPTION

A. PROJECT DESCRIPTION

| | | |
|---|---|---|
| A.1. | PROJECT AREA | 0.25 ACRES |
| A.2. | AREA DISTURBED | 0.25 ACRES |
| A.3. | PERCENT IMPERVIOUS AREA BEFORE CONSTRUCTION | 100% |
| A.4. | RUNOFF COEFFICIENT BEFORE CONSTRUCTION | 70 CN |
| A.5. | PERCENT IMPERVIOUS AREA AFTER CONSTRUCTION | 100 % |
| A.6. | RUNOFF COEFFICIENT AFTER CONSTRUCTION | 70 CN |

B. DESCRIPTION OF CONSTRUCTION ACTIVITY

WORK CONSISTS OF CLEARING, GRADING, EXCAVATION, DRAINAGE IMPROVEMENTS, GRASSING, AND ROADS.

C. RUNOFF DATA

| | | |
|---|---|---|
| C.1. | SOIL CLASSIFICATIONS: | SYMBOL / NAME<br>C/D / BLADEN |
| C.2. | LAND USE(S): | COMMERCIAL |

D. RECEIVING WATERS

E. CLOSEST RECEIVING WATERS: OKATIE RIVER

F. ULTIMATE RECEIVING WATERS: COLLETON RIVER

G. FLOOD

| | | |
|---|---|---|
| G.1. | FEMA FLOOD ZONE(S): | ZONE C |
| G.2. | FEMA FLOOD INSURANCE MAP(S): | 4500250085D |

## II. CONTROL MEASURES

1. EROSION AND SEDIMENT CONTROLS

PRIOR TO START OF CONSTRUCTION, ALL EXTERIOR SILT FENCE WILL BE INSTALLED AS SHOWN ON THE PLANS.

1.1. CLEARING

1.1.1. AS CLEARING IS COMPLETED, ADDITIONAL SILT FENCE WILL BE INSTALLED WHERE NECESSARY, SUCH AS POINTS WHERE FLOWS BECOME CHANNELIZED, AND OTHER POINTS WHERE EXCESSIVE RUNOFF VELOCITIES MAY OCCUR.
1.1.2. INSTALL CONSTRUCTION ENTRANCES / EXITS BEFORE BEGINNING CLEARING
1.1.3. CONSTRUCTION DELAYS IN ANY ONE AREA GREATER THAN 14 DAYS PRIOR TO START OF ROUGH GRADING WILL MANDATE STABILIZATION PROCEDURES. ACCEPTABLE METHODS OF STABILIZATION INCLUDE MULCHING AND TEMPORARY SEEDING.
1.1.4. MAINTAIN EXISTING VEGETATION WHENEVER POSSIBLE AND MINIMIZE THE AREA OF DISTURBANCE. RETAIN AND PROTECT TREES TO ENHANCE FUTURE LANDSCAPING EFFORTS AND REDUCE RAINDROP IMPACT.
1.1.5. INSTALL ALL SEDIMENT CONTROL PRACTICES PRIOR TO ANY UP-SLOPE SOIL DISTURBING ACTIVITIES.
1.1.6. PHASE CONSTRUCTION ACTIVITIES TO MINIMIZE THE AREAS DISTURBED AT ONE TIME. THIS WILL ALSO ALLOW COMPLETED AREAS TO BE STABILIZED AND RE-VEGETATED BEFORE DISTURBING ADJACENT SITES. THE NEED FOR TEMPORARY EROSION CONTROL MEASURES MAY BE AVOIDED BY COMPLETING A PHASE AND INSTALLING PERMANENT EROSION CONTROL MEASURES WHEN THE FINAL GRADE IS ATTAINED.
1.1.7. MAINTAIN AND PROTECT ALL NATURAL WATERWAYS. RETAIN AT LEAST A 35-FOOT UNDISTURBED BUFFER OF NATURAL VEGETATION ALONG ALL WATERWAYS TO FILTER OUT SEDIMENT AND OTHER POLLUTANTS. MAINTAIN A 45-FOOT UNDISTURBED BUFFER AROUND SENSITIVE WATERS.
1.1.8. INSTALL SILT FENCE (OR BIO ROLLS/ROCK SOCK PRODUCTS) ON THE DOWN-SLOPE PERIMETER OF ALL DISTURBED AREAS PRIOR TO ANY SOIL DISTURBING ACTIVITIES (INCLUDING CLEARING AND GRUBBING). SILT FENCE CAN TREAT A MAXIMUM OF 100 SQUARE FEET PER LINEAL FOOT OF FENCE. INSTALL SILT FENCE IN SHORTER REACHES ON THE CONTOUR WITH EACH END TURNED UP-SLOPE . SWALES AND SHORELAND AREAS SHOULD ALSO BE PROTECTED WITH SILT FENCE, BIO ROLLS, OR ROCK SOCKS.
1.1.9. IN AREAS OF CONCENTRATED FLOW INSTALL STRAW BALE CHECKS, ROCK CHECK DAMS, TRIANGULAR DIKES, BIO ROLL BLANKETS, OR ROCK SOCKS TO SLOW RUNOFF AND TRAP SEDIMENT.

1.1.10. USE TEMPORARY SLOPE DRAINS OR ROCK CHUTES TO MOVE WATER DOWN STEEP SLOPES.

1.1.11. CONSTRUCT SEDIMENT BASINS FOR DRAINAGE AREAS GREATER THAN 10 ACRES

1.2. ROUGH GRADING

1.2.1. ALL EXISTING CONTROLS WILL BE MAINTAINED DURING ROUGH GRADING, DELAYS OF GREATER THAN 14 DAYS PRIOR TO START OF NEXT ACTIVITY WILL MANDATE STABILIZATION PROCEDURES. ACCEPTABLE METHODS OF STABILIZATION INCLUDE MULCHING AND TEMPORARY SEEDING.
1.2.2. ALL AREAS NOT SUBJECT TO FURTHER CONSTRUCTION (DRAINAGE, SANITARY SEWER, ROADS, WATER DISTRIBUTION SYSTEMS, OR STORM WATER FACILITIES) SHALL BE GRASSED WITH A PERMANENT COVER.
1.2.3. COVER ANY STOCK PILED TOPSOIL WITH PLASTIC (OR OTHER IMPERVIOUS COVERING) OR USE A TEMPORARY SEED MIX. USE STOCKPILED TOPSOIL AS EARTHEN BERMS TO SERVE AS TEMPORARY SEDIMENT BASINS.

1.3. DRAINAGE

1.3.1. ALL EXISTING CONTROLS WILL BE MAINTAINED DURING DRAINAGE INSTALLATION.
1.3.2. CONSTRUCTION DRAINAGE WILL BE ROUTED THROUGH LAKES, WHICH WILL ACT AS SEDIMENT BASINS OR OTHER ACCEPTABLE SEDIMENT BASINS/TRAPS.
1.3.3. STORM DRAIN INLET PROTECTION AS SHOWN ON DETAIL SHEET SHALL BE INSTALLED ON ALL CURB INLETS, STORM DRAIN MANHOLES, JUNCTION BOXES, AND GRATE INLETS.
1.3.4. DELAYS OF GREATER THAN 14 DAYS PRIOR TO START OF THE NEXT CONSTRUCTION SEQUENCE WILL MANDATE STABILIZATION PROCEDURES. ACCEPTABLE METHODS OF STABILIZATION INCLUDE MULCHING AND TEMPORARY SEEDING.
1.3.5. ALL STORM LINES NOT IN STREETS OR OTHER PAVED AREAS ARE TO BE MULCHED AND SEEDED WITHIN 5 DAYS AFTER BACKFILL.

1.4. WASTE DISTRIBUTION SYSTEM INSTALLATION

1.4.1. ALL EXISTING CONTROLS WILL BE MAINTAINED DURING INSTALLATION OF THE WATER DISTRIBUTION SYSTEM.
1.4.2. DELAYS OF GREATER THAN 14 DAYS PRIOR TO START OF NEXT ACTIVITY WILL MANDATE STABILIZATION PROCEDURES. ACCEPTABLE METHODS OF STABILIZATION INCLUDE MULCHING AND TEMPORARY SEEDING.

1.5. WASTEWATER COLLECTION SYSTEM INSTALLATION

1.5.1. ALL EXISTING CONTROLS WILL BE MAINTAINED DURING INSTALLATION OF THE WASTEWATER SYSTEM.
1.5.2. DELAYS OF GREATER THAN 14 DAYS PRIOR TO START OF NEXT ACTIVITY WILL MANDATE STABILIZATION PROCEDURES. ACCEPTABLE METHODS OF STABILIZATION INCLUDE MULCHING AND TEMPORARY SEEDING.

1.6. CONSTRUCTION OF ROADS

1.6.1. ALL EXISTING CONTROLS WILL BE MAINTAINED DURING ROAD CONSTRUCTION.
1.6.2. DELAYS OF GREATER THAN 14 DAYS PRIOR TO START OF NEXT ACTIVITY WILL MANDATE STABILIZATION PROCEDURES. ACCEPTABLE METHODS OF STABILIZATION INCLUDE MULCHING AND TEMPORARY SEEDING.

1.7. GRASSING

1.7.1. ALL EXISTING CONTROLS WILL BE MAINTAINED UNTIL GRASSING IS ESTABLISHED
1.7.2. ANY AREAS THAT ERODE OR WHERE GRASS DOES NOT ESTABLISH ITSELF SHALL BE RE-GRADED AND RE-GRASSED.

2. STORM WATER MANAGEMENT

RUNOFF FROM THIS PROJECT WILL DISCHARGE INTO A STORM WATER MANAGEMENT SYSTEM. TREATMENT WILL OCCUR IN STORM WATER DETENTION PONDS.

3. OTHER CONTROLS

3.1. WASTE DISPOSAL

3.1.1. NO SOLID MATERIALS, INCLUDING BUILDING MATERIALS, SHALL BE DISCHARGED TO ANY RECEIVING WATERS.
3.1.2. OFFSITE VEHICLE TRACKING OF SEDIMENTS AND THE GENERATION OF DUST SHALL BE MINIMIZED.
3.1.3. THIS PLAN SHALL COMPLY WITH STATE AND/OR LOCAL WASTE DISPOSAL, SANITARY SEWER OR SEPTIC SYSTEM REGULATIONS.
3.1.4. DUST CONTROL ON DISTURBED AREAS - CONTROLLING SURFACE AND AIR MOVEMENT OF DUST ON CONSTRUCTION SITE AND HAUL ROUTES. THE PURPOSE OF THE MEASURE IS TO REDUCE THE PRESENCE OF AIRBORNE SUBSTANCES, WHICH MAY BE HARMFUL OR INJURIOUS TO HUMAN HEALTH, WELFARE OR SAFETY, OR TO ANIMALS OR PLANT LIFE.

## III. MAINTENANCE

1. MAINTENANCE PROGRAM

1.1. THE SITE SUPERINTENDENT, OR HIS/HER REPRESENTATIVE, SHALL MAKE VISUAL INSPECTIONS OF ALL MECHANICAL CONTROLS AND NEWLY STABILIZED AREAS (I.E. SEEDED AND MULCHED AND/OR SODDED AREAS) ON A DAILY BASIS; ESPECIALLY AFTER HEAVY RAINFALL EVENT TO INSURE THAT ALL CONTROLS ARE MAINTAINED AND PROPERLY FUNCTIONING. ANY DAMAGED CONTROLS SHALL BE REPAIRED PRIOR TO THE END OF THE WORK DAY INCLUDING RE-SEEDING AND MULCHING OR RE-SODDING IF NECESSARY.

1.2. EROSION CONTROL MEASURES WILL BE MAINTAINED AT ALL TIMES. IF FULL IMPLEMENTATION OF THE APPROVED PLAN DOES NOT PROVIDE FOR EFFECTIVE EROSION CONTROL, ADDITIONAL EROSION AND SEDIMENTATION CONTROL MEASURES SHALL BE IMPLEMENTED TO CONTROL OR TREAT THE SEDIMENT SOURCE. ALL DRAINAGE SWALES, POCKETS, DEPRESSION, LOW LINES, AND OUTLET DITCHES SHALL DRAIN EFFECTIVELY AT ALL TIMES. SETTLEMENT OR WASHING THAT MAY OCCUR SHALL BE REPAIRED BY THE CONTRACTOR. SEDIMENT WILL BE REMOVED FROM BEHIND THE SEDIMENT FENCE WHEN IT REACHES 1/3 THE HEIGHT OF THE FENCE. THE SEDIMENT FENCE WILL BE REPAIRED AS NECESSARY TO MAINTAIN AN EFFECTIVE BARRIER. MAINTAIN THE CONSTRUCTION EXIT IN A CONDITION TO PREVENT MUD OR SEDIMENT FROM LEAVING THE SITE. THIS MAY REQUIRE PERIODIC TOP DRESSING WITH ADDITIONAL STONE. IMMEDIATELY REMOVE ALL OBJECTIONABLE MATERIALS SPILLED, WASHED, OR TACKED ONTO PUBLIC ROADWAYS. RESEED AND MULCH AREA WHERE SEEDING EMERGENCE IS POOR, OR WHERE EROSION OCCURS. PROTECT FROM TRAFFIC AS MUCH AS POSSIBLE. INSPECT ALL MULCHES PERIODICALLY, AND AFTER RAINSTORMS TO CHECK FOR EROSION, DISLOCATION OR FAILURE. IF WASHOUT OCCURS, REPAIR THE SLOPE GRADE, RESEED AND REINSTALL MULCH. FOLLOW THE CONSTRUCTION SEQUENCE THROUGHOUT THE PROJECT DEVELOPMENT. WHEN CHANGES IN CONSTRUCTION ACTIVITIES ARE NEEDED, AMEND THE SEQUENCE SCHEDULE IN ADVANCE TO MAINTAIN MANAGEMENT CONTROL. IF MAJOR CHANGES ARE NECESSARY, SEND A COPY OF THE MODIFIED SCHEDULE TO THE ENGINEER, SEDIMENT AND EROSION CONTROL MEASURES WILL REMAIN IN PLACE AND BE MAINTAINED UNTIL THE DISTURBED AREAS ARE STABILIZED.

2. SILT FENCE

SILT FENCES WILL BE MONITORED DURING CONSTRUCTION. ANY SILT FENCE WHICH IS NOT FUNCTIONING PROPERLY WILL BE PROMPTLY REPAIRED. CLEAN OUT THE SILT FENCE WHEN IT REACHES 1/3 THE HEIGHT OF THE FENCE OR REPLACE WITH FUNCTIONAL SILT FENCE WITHIN 24 HOURS. USE OF HOSES AND WATER TO FLUSH THE SEDIMENT INTO THE STORM INLETS IS UNACCEPTABLE.

3. SEDIMENTATION BASINS

SEDIMENTATION BASINS WHICH ARE AT 50% USED CAPACITY OR APPROACHING SUCH CAPACITY SHALL BE RE-EXCAVATED TO ORIGINAL DIMENSIONS AND THE SILT PROPERLY DISPOSED OF.

4. SEDIMENT LOGS/ROLLS

SEDIMENT LOGS/ROLLS OR OTHER CONTROL MEASURES WHICH BEGIN TO DISINTEGRATE OR FUNCTION INEFFECTIVELY SHALL BE PROMPTLY REPLACED.

5. VEGETATION COVER

ANY VEGETATION COVER SERVING TO STABILIZE DISTURBED SOILS WHICH IS ITSELF DISTURBED SHALL IMMEDIATELY BE REPLACED.

6. CONSTRUCTION ENTRANCE

MAINTAIN ROCK CONSTRUCTION ENTRANCE AND CLEAN ADJACENT ROADS OF ANY MUD TRACKED ONTO THEM.

## IV. INSPECTIONS

1. QUALIFIED PERSONNEL WILL INSPECT DISTURBED AREAS OF THE CONSTRUCTION SITE, AREAS USED FOR STORAGE OF MATERIALS THAT ARE EXPOSED TO PRECIPITATION THAT HAVE NOT BEEN FINALLY STABILIZED, STRUCTURAL CONTROL MEASURES, AND LOCATIONS WHERE VEHICLES ENTER OR EXIT THE SITE AT LEAST ONCE EVERY SEVEN CALENDAR DAYS. WHERE SITES HAVE BEEN FINALLY STABILIZED SUCH INSPECTIONS SHALL BE CONDUCTED AT LEAST ONCE EVERY MONTH DURING THE WARRANTY PERIOD.

2. DISTURBED AREAS AND AREAS USED FOR STORAGE OF MATERIALS THAT ARE EXPOSED TO PRECIPITATION SHALL BE INSPECTED FOR EVIDENCE OF, OR THE POTENTIAL FOR, POLLUTANTS ENTERING THE DRAINAGE SYSTEM. EROSION AND SEDIMENT CONTROL MEASURES IDENTIFIED IN THE PLAN SHALL BE OBSERVED TO ENSURE THAT THEY ARE OPERATING CORRECTLY. WHERE DISCHARGE LOCATIONS OR POINTS ARE ACCESSIBLE, THEY SHALL BE INSPECTED TO ASCERTAIN WHETHER EROSION CONTROL MEASURES ARE EFFECTIVE IN PREVENTING SIGNIFICANT IMPACTS TO RECEIVING WATERS. LOCATIONS WHERE VEHICLES ENTER OR EXIT THE SITE SHALL BE INSPECTED FOR EVIDENCE OF OFFSITE SEDIMENT TRACKING.

3. A WRITTEN REPORT SUMMARIZING THE SCOPE OF THE INSPECTION, NAME(S) AND QUALIFICATIONS OF PERSONNEL MAKING THE INSPECTION, THE DATE(S) OF THE INSPECTION, WEATHER INFORMATION FOR THE PERIOD SINCE THE LAST INSPECTION (OR SINCE COMMENCEMENT OF CONSTRUCTION ACTIVITY) INCLUDING A BEST ESTIMATE OF THE BEGINNING OF EACH STORM EVENT, DURATION OF EACH STORM EVENT, APPROXIMATE AMOUNT OF RAINFALL FOR EACH STORM EVENT (IN INCHES) AND WHETHER ANY DISCHARGES OCCURRED, LOCATION(S) OF DISCHARGES OF SEDIMENT OR OTHER POLLUTANTS FROM THE SITE, LOCATION(S) OF BMP'S THAT NEED MAINTENANCE, LOCATION(S) OF BMP'S THAT FAILED TO OPERATE AS DESIGNED OR PROVED INADEQUATE FOR A PARTICULAR LOCATION, LOCATION(S) WHERE ADDITIONAL BMP'S ARE NEEDED THAT DID NOT EXIST AT THE TIME OF INSPECTION AND ANY CORRECTIVE ACTION REQUIRED INCLUDING ANY CHANGES TO SWPPP NECESSARY AND IMPLEMENTATION DATES.

4. THE REPORT SHALL BE MAINTAINED AT LEAST THREE YEARS FROM THE DATE THE SITE IS FINALLY STABILIZED. THE REPORT MUST BE SIGNED AND SHALL CONTAIN A CERTIFICATION THAT THE FACILITY IS IN COMPLIANCE WITH THE STORM WATER POLLUTION PREVENTION PLAN AND THE NPDES PERMIT REFERENCED ABOVE. THE CONTRACTOR SHALL MAINTAIN THIS REPORT. THE REPORT SHALL BE SUBMITTED TO THE ENGINEER AND OWNER.

## V. LONG TERM MAINTENANCE OF DRAINAGE AND STORM WATER MANAGEMENT SYSTEM

THE ROADS AND DRAINAGE SYSTEM WILL BE OWNED AND MAINTAINED BY BC BUCKWALTER LLC, AFTER CONSTRUCTION IS COMPLETE.

## VI. SC DHEC STANDARD NOTES

1. IF NECESSARY, SLOPES WHICH EXCEED EIGHT (8) VERTICAL FEET SHOULD BE STABILIZED WITH SYNTHETIC OR VEGETATIVE MATS, IN ADDITION TO GRASSING / HYDROSEEDING. IT MAY BE NECESSARY TO INSTALL TEMPORARY SLOPE DRAINS DURING CONSTRUCTION. TEMPORARY BERMS MAY BE NEEDED UNTIL THE SLOPE IS BROUGHT TO GRADE.

2. STABILIZATION MEASURES SHALL BE INITIATED AS SOON AS PRACTICABLE IN PORTIONS OF THE SITE WHERE CONSTRUCTION ACTIVITIES HAVE TEMPORARILY OR PERMANENTLY CEASED, BUT IN NO CASE MORE THAN FOURTEEN (14) DAYS AFTER WORK HAS CEASED, EXCEPT AS STATED BELOW:

2.1. WHERE STABILIZATION BY THE 14TH DAY IS PRECLUDED BY SNOW COVER OR FROZEN GROUND CONDITIONS STABILIZATION MEASURES MUST BE INITIATED AS SOON AS PRACTICABLE.
2.2. WHERE CONSTRUCTION ACTIVITY ON A PORTION OF THE SITE IS TEMPORARILY CEASED, AND EARTH-DISTURBING ACTIVITIES WILL BE RESUMED WITHIN 14 DAYS, TEMPORARY STABILIZATION MEASURES DO NOT HAVE TO BE INITIATED ON THAT PORTION OF THE SITE.

3. ALL SEDIMENT AND EROSION CONTROL DEVICES SHALL BE INSPECTED ONCE EVERY CALENDAR WEEK. IF SITE INSPECTIONS IDENTIFY BMP'S THAT ARE DAMAGED OR ARE NOT OPERATING EFFECTIVELY, MAINTENANCE MUST BE PERFORMED AS SOON AS PRACTICAL OR AS REASONABLY POSSIBLE BEFORE THE NEXT STORM EVENT WHENEVER PRACTICAL.

4. PROVIDE SILT FENCE AND/OR OTHER CONTROL DEVICES, AS MAY BE REQUIRED, TO CONTROL SOIL EROSION DURING UTILITY CONSTRUCTION. ALL DISTURBED AREAS SHALL BE CLEANED, GRADED AND STABILIZED WITH GRASSING IMMEDIATELY AFTER THE UTILITY INSTALLATION. FILL, COVER, AND TEMPORARY SEEDING AT THE END OF EACH DAY ARE RECOMMENDED. IF WATER IS ENCOUNTERED WHILE TRENCHING, THE WATER SHOULD BE FILTERED TO REMOVE ANY SEDIMENTS BEFORE BEING PUMPED INTO ANY WATERS OF THE STATE.

5. ALL EROSION CONTROL DEVICES SHALL BE PROPERLY MAINTAINED DURING ALL PHASES OF CONSTRUCTION UNTIL THE COMPLETION OF ALL CONSTRUCTION ACTIVITIES AND ALL DISTURBED AREAS HAVE BEEN STABILIZED. ADDITIONAL CONTROL DEVICES MAY BE REQUIRED DURING CONSTRUCTION IN ORDER TO CONTROL EROSION AND/OR OFFSITE SEDIMENTATION. ALL TEMPORARY CONTROL DEVICES SHALL BE REMOVED ONCE CONSTRUCTION IS COMPLETE AND THE SITE IS STABILIZED.

6. THE CONTRACTOR MUST TAKE NECESSARY ACTION TO MINIMIZE THE TRACKING OF MUD ONTO THE PAVED ROADWAY FROM CONSTRUCTION AREAS AND THE GENERATION OF DUST. THE CONTRACTOR SHALL DAILY REMOVE MUD/SOIL FROM PAVEMENT AS MAY BE REQUIRED.

7. RESIDENTIAL SUBDIVISIONS REQUIRE EROSION CONTROL FEATURES FOR INFRASTRUCTURE AS WELL AS FOR INDIVIDUAL LOT CONSTRUCTION. INDIVIDUAL PROPERTY OWNERS SHALL FOLLOW THESE PLANS DURING CONSTRUCTION OR OBTAIN APPROVAL OF AN INDIVIDUAL PLAN IN ACCORDANCE WITH S.C. REG. 72-300 AND SCR100000.

8. TEMPORARY DIVERSION BERMS AND/OR DITCHES WILL BE PROVIDED AS NEEDED DURING CONSTRUCTION TO PROTECT WORK AREAS FROM UPSLOPE RUNOFF AND/OR TO DIVERT SEDIMENT LADEN WATER TO APPROPRIATE TRAPS OR STABLE OUTLETS.

9. ALL WATERS OF THE STATE (WOS), INCLUDING WETLANDS, ARE TO BE FLAGGED OR OTHERWISE CLEARLY MARKED IN THE FIELD. A DOUBLE ROW OF SILT FENCE IS TO BE INSTALLED IN ALL AREAS WHERE A 50-FOOT BUFFER CAN NOT BE MAINTAINED BETWEEN THE DISTURBED AREA AND ALL WOS. A 10-FOOT BUFFER SHOULD BE MAINTAINED BETWEEN THE LAST ROW OF SILT FENCE AND ALL WOS

10. LITTER, CONSTRUCTION DEBRIS, OILS, FUELS, AND BUILDING PRODUCTS WITH SIGNIFICANT POTENTIAL FOR IMPACT (SUCH AS STOCKPILES OF FRESHLY TREATED LUMBER) AND CONSTRUCTION CHEMICALS THAT COULD BE EXPOSED TO STORM WATER MUST BE PREVENTED FROM BECOMING A POLLUTANT SOURCE IN STORM WATER DISCHARGES.

11. A COPY OF THE SWPPP, INSPECTION RECORDS AND RAINFALL DATA MUST BE RETAINED AT THE CONSTRUCTION SITE OR A NEARBY LOCATION EASILY ACCESSIBLE DURING NORMAL BUSINESS HOURS, FROM THE DATE OF COMMENCEMENT OF CONSTRUCTION ACTIVITIES TO THE DATE THAT FINAL STABILIZATION IS REACHED.

12. INITIATE STABILIZATION MEASURES ON ANY EXPOSED STEEP SLOPE (3H:1V OR GREATER) WHERE LAND DISTURBING ACTIVITIES HAVE PERMANENTLY OR TEMPORARILY CEASED, AND WILL NOT RESUME FOR A PERIOD OF 7 CALENDAR DAYS.

13. MINIMIZE SOIL COMPACTION IN AREAS NOT UNDER PAVEMENTS AND /OR STRUCTURES AND, UNLESS INFEASIBLE, PRESERVE TOPSOIL.

14. MINIMIZE THE DISCHARGE OF POLLUTANTS FROM EQUIPMENT AND VEHICLE WASHING, WHEEL WASH WATER AND OTHER WASH WATERS. WASH WATERS MUST BE TREATED IN A SEDIMENT BASIN OR ALTERNATIVE CONTROL THAT PROVIDES EQUAL OR BETTER TREATMENT PRIOR TO DISCHARGE.

15. MINIMIZE THE DISCHARGE OF POLLUTANTS FROM DEWATERING OF TRENCHES AND EXCAVATED AREAS. THESE DISCHARGES ARE TO BE ROUTED THROUGH APPROPRIATE BMPS (SEDIMENT BASIN, FILTER BAG, ETC.).

16. THE FOLLOWING DISCHARGES ARE PROHIBITED:

16.1. WASTEWATER FROM WASHOUT OF CONCRETE, UNLESS MANAGED BY AN APPROPRIATE CONTROL;
16.2. WASTEWATER FROM WASHOUT AND CLEANOUT OF OF STUCCO, PAINT, FORM RELEASE OILS, CURING COMPOUNDS AND OTHER CONSTRUCTION MATERIALS;
16.3. FUELS, OILS OR OTHER POLLUTANTS USED IN VEHICLE AND EQUIPMENT OPERATION AND MAINTENANCE; AND
16.4. SOAPS OR SOLVENTS USED IN VEHICLE AND EQUIPMENT WASHING.

17. AFTER CONSTRUCTION ACTIVITIES BEGIN, INSPECTIONS MUST BE CONDUCTED AT A MINIMUM OF AT LEAST ONCE EVERY CALENDAR WEEK AND MUST BE CONDUCTED UNTIL FINAL STABILIZATION IS REACHED ON ALL AREAS OF THE CONSTRUCTION SITE.

18. IF EXISTING BMPS NEED TO BE MODIFIED OR IF ADDITIONAL BMPS ARE NECESSARY TO COMPLY WITH THE REQUIREMENTS OF PERMIT SCR100000 AND/OR SC'S WATER QUALITY STANDARDS, IMPLEMENTATION MUST BE COMPLETED BEFORE THE NEXT STORM EVENT WHENEVER PRACTICABLE. IF IMPLEMENTATION BEFORE THE NEXT STORM EVENT IS IMPRACTICABLE, THE SITUATION MUST BE DOCUMENTED IN THE SWPPP AND ALTERNATIVE BMPS MUST BE IMPLEMENTED AS SOON AS REASONABLY POSSIBLE.

19. A PRE-CONSTRUCTION CONFERENCE MUST BE HELD FOR EACH CONSTRUCTION SITE WITH AN APPROVED ON-SITE SWPPP PRIOR TO THE IMPLEMENTATION OF CONSTRUCTION ACTIVITIES. FOR NON-LINEAR PROJECTS THAT DISTURB 10 ACRES OR MORE, THIS CONFERENCE MUST BE HELD ON-SITE UNLESS THE DEPARTMENT HAS APPROVED OTHERWISE.

## VII. EROSION, SEDIMENTATION & POLLUTION CONTROL NOTES

1. THE IMPLEMENTATION OF THESE EROSION SEDIMENT CONTROL (ESC) PLANS AND THE CONSTRUCTION, MAINTENANCE, REPLACEMENT, AND UPGRADING OF THESE ESC FACILITIES IS THE RESPONSIBILITY OF THE CONTRACTOR UNTIL ALL CONSTRUCTION IS COMPLETED AND APPROVED AND VEGETATION/LANDSCAPING IS ESTABLISHED.

2. THE ESC FACILITIES SHOWN ON THIS PLAN MUST BE CONSTRUCTED IN CONJUNCTION WITH ALL CLEARING AND GRADING ACTIVITIES, AND IN SUCH A MANNER AS TO INSURE THAT SEDIMENT AND SEDIMENT LADEN WATER DO NOT ENTER THE DRAINAGE SYSTEM, ROADWAYS, OR VIOLATE APPLICABLE WATER STANDARDS.

3. THE ESC FACILITIES SHOWN ON THIS PLAN ARE THE MINIMUM REQUIREMENTS FOR ANTICIPATED SITE CONDITIONS. DURING THE CONSTRUCTION PERIOD, THESE ESC FACILITIES SHALL BE UPGRADED AS NEEDED FOR UNEXPECTED STORM EVENTS AND TO ENSURE THAT SEDIMENT AND SEDIMENT LADEN WATER DO NOT LEAVE THE SITE.

4. THE ESC FACILITIES SHALL BE INSPECTED DAILY BY THE CONTRACTOR AND MAINTAINED AS NECESSARY TO ENSURE THEIR CONTINUED FUNCTIONING.

5. THE ESC FACILITIES ON INACTIVE SITES SHALL BE INSPECTED AND MAINTAINED A MINIMUM OF ONCE A MONTH OR WITHIN THE 24 HOURS FOLLOWING A MAJOR STORM EVENT.

6. AT NO TIME SHALL MORE THAN ONE FOOT OF SEDIMENT BE ALLOWED TO ACCUMULATE WITHIN A CATCH BASIN. ALL CATCH BASINS AND CONVEYANCE LINES SHALL BE CLEANED PRIOR TO PAVING AND PRIOR TO FINAL INSPECTION. THE CLEANING OPERATION SHALL NOT FLUSH SEDIMENT LADEN WATER INTO THE DOWNSTREAM SYSTEM.

7. STABILIZED CONSTRUCTION ENTRANCES SHALL BE INSTALLED AT THE BEGINNING OF CONSTRUCTION AND MAINTAINED FOR THE DURATION OF THE PROJECT. ADDITIONAL MEASURES MAY BE REQUIRED TO INSURE THAT ALL PAVED AREAS ARE KEPT CLEAN FOR THE DURATION OF THE PROJECT.

8. BEFORE COMMENCING ANY LAND DISTURBING ACTIVITY, THE EXISTING STORM WATER INLET(S) THAT RECEIVING RUNOFF FROM THE PROPOSED WORK AREA SHALL BE PROTECTED. THE TEMPORARY INLET PROTECTION MUST REMAIN IN PLACE UNTIL THE CONSTRUCTION ACTIVITY IS COMPLETED, THE STREET HAS BEEN SWEPT AND ANY EXPOSED SOILS ARE STABILIZED. THE CONTRACTOR IS ALSO RESPONSIBLE FOR REMOVING ANY TEMPORARY INLET PROTECTION INSTALLED; AFTER ALL DISTURBED AREAS ARE STABILIZED. TEMPORARY PROTECTION OF THE INLETS MAY BE ACCOMPLISHED BY ONE OR MORE OF THE FOLLOWING:

8.1. USE OF GRAVEL BAGS TO FILTER THE SEDIMENT FROM ANY RUNOFF. TO MAKE A GRAVEL BAG, USE A BAG MADE OF GEOTEXTILE FABRIC (NOT BURLAP) AND FILL WITH EITHER 3/4 INCH ROCK OR 1/4 INCH PEA GRAVEL.
8.2. USE OF SEDIMENT LOGS TO FILTER THE SEDIMENT FROM ANY RUNOFF (AVAILABLE THROUGH LOCAL EROSION CONTROL SUPPLIERS).
8.3. USE OF ABOVE OR UNDER-GRATE FILTER BAGS OR DEVICES TO FILTER THE SEDIMENT FROM ANY RUNOFF (AVAILABLE THROUGH EROSION CONTROL SUPPLIERS).

9. WATER MAY NOT BE DISCHARGED IN A MANNER THAT CAUSES EROSION, SEDIMENTATION, OR FLOODING ON THE SITE, ON DOWNSTREAM PROPERTIES, IN THE RECEIVING CHANNELS, OR IN ANY STORM WATER INLET. WHEN SITE DEWATERING, WATER PUMPED FROM THE SITE, INCLUDING TRENCHES, SHALL BE TREATED BY ONE OF THE FOLLOWING:

9.1. TEMPORARY SEDIMENTATION BASINS
9.2. SEDIMENT FILTERING BAGS

10. THE CONTRACTOR SHALL VERIFY THE SIZE AND LOCATION OF ALL EXISTING UTILITIES. EXISTING UTILITIES ARE ALL UTILITIES THAT EXIST ON THE PROJECT IN AN ORIGINAL, RELOCATED OR NEWLY INSTALLED POSITION. THE CONTRACTOR SHALL BE HELD RESPONSIBLE FOR THE COST OF REPAIRS TO DAMAGED UNDERGROUND OR OVERHEAD FACILITIES, EVEN IF THE UTILITY IS NOT SHOWN ON THE SITE DEVELOPMENT PLANS. THE CONTRACTOR SHALL CONTACT THE LOCAL UTILITIES PROTECTION CENTER TO COORDINATE THE MARKING OF EXISTING UTILITY LINES A MINIMUM OF 96 HOURS PRIOR TO COMMENCEMENT OF ANY WORK.

11. THE CONTRACTOR SHALL FLUSH ALL INLETS AND PIPE AT THE COMPLETION OF CONSTRUCTION TO REMOVE SILT AND DEBRIS. THE CLEANING AND FLUSHING OF INLETS AND PIPE (EXISTING AND PROPOSED) SHALL BE CONSIDERED PART OF THE COST FOR THE PROJECT.

12. EGRESS FROM THE SITE SHALL BE CONTROLLED SUCH THAT VEHICLES LEAVING THE SITE MUST TRAVERSE CONSTRUCTION EXITS TO REMOVE MUD FROM TIRES.

13. SCHEDULE CONSTRUCTION ACTIVITIES TO MINIMIZE THE EXPOSED AREA AND DURATION OF EXPOSURE. IN SCHEDULING, TAKE INTO ACCOUNT THE SEASON AND THE WEATHER FORECAST.

14. EROSION CONTROL MEASURES ARE THE MINIMUM REQUIRED. THE CONTRACTOR SHALL PROVIDE ADDITIONAL CONTROL MEASURES AS DICTATED BY ACTUAL FIELD CONDITIONS AT THE TIME OF CONSTRUCTION IN ORDER TO PREVENT EROSION AND CONTROL SEDIMENT. EROSION AND SEDIMENT CONTROL MEASURES WILL REMAIN IN PLACE AND BE MAINTAINED UNTIL THE ENTIRE PROJECT IS TERMINATED OR SUSPENDED FOR AND INDEFINITE LENGTH OF TIME, ALL DISTURBED AREAS SHALL BE PLANTED WITH PERMANENT VEGETATION.

15. THE DATA, TOGETHER WITH ALL OTHER INFORMATION SHOWN ON THESE PLANS, OR IN ANY WAY INDICATED THEREBY, WHETHER BY DRAWINGS OR NOTES, OR IN ANY OTHER MANNER, IS BASED UPON FIELD INVESTIGATIONS AND IS BELIEVED TO BE INDICATIVE OF ACTUAL CONDITIONS. HOWEVER, THE SAME IS SHOWN AS INFORMATION ONLY, IS NOT GUARANTEED AND DOES NOT BIND THOMAS & HUTTON, OR THE OWNER IN ANY WAY.

16. CONTRACTOR SHALL MAINTAIN SITE ON A DAILY BASIS TO PROVIDE FOR POSITIVE DRAINAGE. CONTRACTOR, AT HIS COST, SHALL GRADE SITE AND PROVIDE NECESSARY TEMPORARY DRAINAGE SWALES TO INSURE STORM WATER DOES NOT POND ON SITE.

17. SITE DRAINAGE SHALL BE ESTABLISHED TO PREVENT ANY PONDED WATER CONDITIONS WITHIN THE CONSTRUCTION AREA AND TO FACILITATE STORM WATER DISCHARGE.

18. THE ESCAPE OF SEDIMENT FROM THE SITE SHALL BE PREVENTED BY THE INSTALLATION OF EROSION AND SEDIMENT CONTROL MEASURES AND PRACTICES PRIOR TO, OR CONCURRENT WITH, LAND DISTURBING ACTIVITIES.

19. LIME RATES AND ANALYSIS:

19.1. AGRICULTURAL LIME SHALL BE APPLIED AT THE RATE SHOWN IN THE SEEDING SECTION UNLESS SOIL TESTS INDICATE OTHERWISE. GRADED AREAS REQUIRE LIME APPLICATION. IF LIME IS APPLIED WITHIN SIX MONTHS OF PLANTING PERMANENT PERENNIAL VEGETATION, ADDITIONAL LIME IS NOT REQUIRED. AGRICULTURAL LIME APPLICATION SHALL BE WITHIN THE SPECIFICATIONS OF THE SOUTH CAROLINA DEPARTMENT OF AGRICULTURE.

20. MULCHING:

MULCHING IS REQUIRED FOR ALL PERMANENT VEGETATION APPLICATIONS. MULCH APPLIED TO SEEDED AREAS SHALL ACHIEVE 75% SOIL COVER. SELECT THE MULCHING MATERIAL FROM THE FOLLOWING AND APPLY AS INDICATED:

20.1. DRY STRAW OR DRY HAY OF GOOD QUALITY AND FREE OF WEED SEEDS CAN BE USED. DRY STRAW SHALL BE APPLIED AT THE RATE OF TWO TONS PER ACRE. DRY HAY SHALL BE APPLIED AT THE RATE OF 2 1/2 TONS PER ACRE.
20.2. WOOD CELLULOSE MULCH OR WOOD PULP FIBER SHALL BE USED WITH HYDRAULIC SEEDING. IT SHALL BE APPLIED AT A RATE OF 500 POUNDS PER ACRE. DRY STRAW OR DRY HAY SHALL BE APPLIED (AT THE RATE INDICATED ABOVE) AFTER HYDRAULIC SEEDING.
20.3. ONE THOUSAND POUNDS OF WOOD CELLULOSE OR WOOD PULP FIBER, WHICH INCLUDES A TACKIFIER, SHALL BE USED WITH HYDRAULIC SEEDING ON SLOPES 3/4:1 OR STEEPER.
20.4. SERICEA LESPEDEZA HAY CONTAINING MATURE SEED SHALL BE APPLIED AT A RATE OF 3 TONS PER ACRE.
20.5. PINE STRAW OR PINE BARK SHALL BE APPLIED AT A THICKNESS OF 3 INCHES FOR BEDDING PURPOSES. OTHER SUITABLE MATERIALS IN SUFFICIENT QUANTITY MAY BE USED WHERE ORNAMENTALS OR OTHER GROUND COVERS ARE PLANTED. THIS IS NOT APPROPRIATE FOR SEEDED AREAS.
20.6. WHEN USING TEMPORARY EROSION CONTROL BLANKETS OR BLACK SOD, MULCH IS NOT REQUIRED.
20.7. ON SLOPES GREATER THAN 10 FEET IN LENGTH AND 4:1 OR STEEPER, USE THE FOLLOWING EROSION CONTROL BLANKETS THAT HAVE BEEN PROPERLY ANCHORED TO THE SLOPE ACCORDING TO THE MANUFACTURER'S INSTRUCTIONS:

- 2:1 SLOPES OR STEEPER: - STRAW/COCONUT BLANKET OR HIGH VELOCITY WOOD BLANKET
- 3:1 SLOPES OR STEEPER: - WOOD OR STRAW BLANKET WITH NET ON BOTH SIDES
- 4:1 SLOPES OR FLATTER: - WOOD OR STRAW MULCH BLANKET WITH NET ON ONE SIDE

## VIII. HOUSEKEEPING

THESE PERFORMANCE STANDARDS APPLY TO ALL SITES.

1. PETROLEUM PRODUCTS: INCLUDING OIL, GASOLINE, LUBRICANTS AND ASPHALTIC SUBSTANCES.

1.1. HAVE EQUIPMENT TO CONTAIN AND CLEAN UP PETROLEUM SPILLS IN FUEL STORAGE AREAS OR ON MAINTENANCE AND FUELING VEHICLES
1.2. STORE IN COVERED AREAS PROTECTED WITH DIKES

2. SPILLS: PREVENTION AND RESPONSE.

2.1. STORE AND HANDLE MATERIALS TO PREVENT SPILLS
2.2. TIGHTLY SEALED CONTAINERS, NEAT AND SECURE STACKING, ETC.
2.3. REDUCE STORM WATER CONTACT IF SPILL OCCURS
2.3.1. CLEANUP PROCEDURES SHOULD BE CLEARLY POSTED.
2.3.2. CLEANUP MATERIALS SHOULD BE READILY AVAILABLE
2.3.3. STOP THE SOURCE
2.3.4. CONTAIN THE SPILL

3. NON-STORM WATER DISCHARGES

THE FOLLOWING NON-STORMWATER DISCHARGES MUST BE PROTECTED FROM CAUSING POLLUTION OR EROSION:

3.1. DISCHARGES FROM FIRE-FIGHTING ACTIVITIES
3.2. FIRE HYDRANT FLUSHINGS
3.3. WATERS USED TO WASH VEHICLES WHERE DETERGENTS ARE NOT USED
3.4. WATER USED TO CONTROL DUST
3.5. POTABLE WATER INCLUDING UNCONTAMINATED WATER LINE FLUSHINGS
3.6. ROUTINE EXTERNAL BUILDING WASH DOWN THAT DOES NOT USE DETERGENTS
3.7. PAVEMENT WASH WATERS WHERE SPILLS OR LEAKS OF TOXIC OR HAZARDOUS MATERIALS HAVE NOT OCCURRED (UNLESS ALL SPILLED MATERIAL HAS BEEN REMOVED) AND WHERE DETERGENTS ARE NOT USED
3.8. UNCONTAMINATED AIR CONDITIONING OR COMPRESSOR CONDENSATE
3.9. UNCONTAMINATED GROUND WATER OR SPRING WATER
3.10. FOUNDATION OR FOOTING DRAINS WHERE FLOWS ARE NOT CONTAMINATED WITH PROCESS MATERIALS SUCH AS SOLVENTS
3.11. UNCONTAMINATED EXCAVATION DEWATERING
3.12. LANDSCAPE IRRIGATION
3.13. DECHLORINATED SWIMMING POOL DISCHARGES.

4. CONSTRUCTION WASTES: DEMOLITION RUBBLE, PACKAGING MATERIALS, SCRAP BUILDING SUPPLIES, ETC.

4.1. SELECT A DESIGNATED WASTE COLLECTION AREA
4.2. PROVIDE LIDS FOR WASTE CONTAINERS
4.3. WHEN POSSIBLE LOCATE CONTAINERS IN COVERED AREA
4.4. MAINTAIN CONSISTENT REMOVAL SCHEDULE FOR WASTE

5. PESTICIDES: REDUCE THE AMOUNT OF PESTICIDES AVAILABLE FOR CONTACT WITH STORM WATER.

5.1. STORE IN A DRY COVERED AREA
5.2. INSTALL CURBS OR DIKES AROUND STORAGE AREA TO PROTECT AGAINST SPILLS
5.3. STRICTLY FOLLOW RECOMMENDED APPLICATION RATES

6. FERTILIZERS AND DETERGENTS: REDUCE THE AMOUNT OF FERTILIZERS AND DETERGENTS AVAILABLE FOR CONTACT WITH STORM WATER.

6.1. LIMIT APPLICATION OF FERTILIZERS TO THE MINIMUM NEEDED
6.2. APPLY MORE FREQUENTLY BUT AT LOWER APPLICATION RATES
6.3. LIMIT USE OF DETERGENTS ON-SITE
6.4. DO NOT DISCHARGE WASH WATER INTO STORM WATER SYSTEM
6.5. MAINTAIN STRUCTURAL AND VEGETATIVE BMP'S
6.6. APPLY ACCORDING TO SOIL TEST RECOMMENDATIONS PRIOR TO SEEDING.

## IX. GRASSING NOTES

1. SOD:

ALL SOD SHALL BE NURSERY GROWN AS CLASSIFIED IN THE ASPS GSS. MACHINE CUT SOD AT A UNIFORM THICKENS OF 3/4" WITHIN A TOLERANCE OF 1/4", EXCLUDING TOP GROWTH AND THATCH. EACH INDIVIDUAL SOD PIECE SHALL BE STRONG ENOUGH TO SUPPORT ITS OWN WEIGHT WHEN LIFTED BY THE ENDS. BROKEN PODS, IRREGULARLY SHAPED PIECES, AND TORN OR UNEVEN ENDS WILL BE REJECTED. WOOD PEGS AND / OR WIRE STAPLES SHALL REPLACE SOD WITH AN EQUAL SOD COMPOSITION AS THAT WHICH IS EXISTING. IF NO SOD TYPE EXIST. THEN THE FOLLOWING SOD COMPOSITION SHALL BE USED.

2. SODDING SCHEDULE:

LAY SOD FROM MAY 1 TO SEPTEMBER 15 FOR SPRING PLANTING AND FROM SEPTEMBER 15 TO NOVEMBER 1 FOR FALL PLANTING.

3. SEED:

ALL SEED SHALL CONFORM TO ALL STATE LAWS AND TO ALL REQUIREMENTS AND REGULATIONS OF THE SOUTH CAROLINA DEPARTMENT OF AGRICULTURE. THE SEVERAL VARIETIES OF SEED SHALL BE INDIVIDUALLY PACKAGED OR BAGGED, AND TAGGED TO SHOW NAME OF SEED, NET WEIGHT, ORIGIN, GERMINATION, LOT NUMBER, AND OTHER INFORMATION REQUIRED BY THE DEPARTMENT OF AGRICULTURE.

3.1. PENNISETUM GLAUCIUM (BROWNTOP MILLET): TESTING 98 PERCENT PURITY AND 85 PERCENT GERMINATION.
3.2. BERMUDA COMMON: TESTING 98 PERCENT PURITY AND 85 PERCENT GERMINATION.
3.3. DOMESTIC ITALIAN RYE: TESTING 98 PERCENT PURITY AND 90 PERCENT GERMINATION.

4. MISCELLANEOUS:

4.1. PERMANENT SEEDING SHALL COVER ALL DISTURBED AREA NOT TO BE COVERED BY LANDSCAPE PLANTING BEDS, STRUCTURE, OR PAVEMENT.
4.2. SEED ALL DISTURBED AREAS WITHIN SEVEN DAYS OF FINAL GRADING AND TEMPORARY SEED/MULCH ALL AREAS THAT WILL BE LEFT INACTIVE FOR MORE THAN FOURTEEN (14) DAYS.
4.3. ALL PERMANENT GRASS PLANTINGS SHALL BE MULCHED
4.4. CENTIPEDE SOD CAN BE USED AS PERMANENT COVER ANYTIME EXCEPT JUNE THRU OCTOBER
4.5. IF GRASSING OCCURS DURING A MONTH REQUIRING TEMPORARY COVER, THE CONTRACTOR SHALL APPLY PERMANENT COVER (IN ADDITION TO THE TEMPORARY COVER) AT THE APPROPRIATE TIME AT NO NO ADDITIONAL COST. THE CONTRACTOR MUST ACHIEVE A STRAND OF PERMANENT GRASS WITH AT LEAST 95% COVER. BARE SPOTS CAN NOT BE MORE THAN 1 INCH SQUARE IN ANY 10 SF.

## X. PERMANENT STABILIZATION

NEWLY SEEDED OR SODDED AREAS MUST BE PROTECTED FROM VEHICLE TRAFFIC,EXCESSIVE PEDESTRIAN TRAFFIC, AND CONCENTRATED RUNOFF UNTIL THE VEGETATION IS WELL ESTABLISHED. IF NECESSARY, AREAS MUST BE RE-WORKED AND RE-STABILIZED IF GERMINATION IS SPARSE, PLANT COVERAGE IS SPOTTY ,OR TOPSOIL EROSION IS EVIDENT. ONE OR MORE OF THE FOLLOWING MAY APPLY TO THE SITE.

4.1. SEEDED AREAS

FOR SEEDED AREAS, PERMANENT STABILIZATION MEANS A 90% COVER OF THE DISTURBED AREA WITH MATURE, HEALTHY PLANTS WITH NO EVIDENCE OF WASHING OR RILLING OF THE TOPSOIL.

4.2. SODDED AREAS

FOR SODDED AREAS, PERMANENT STABILIZATION MEANS THE COMPLETE BINDING OF THE SOD ROOTS INTO THE APPROVED MULCH MATERIAL.

4.3. PERMANENT MULCH

FOR MULCHED AREAS, PERMANENT MULCHING MEANS TOTAL COVERAGE OF THE EXPOSED AREA WITH AN APPROVED MULCH MATERIAL.

4.4. RIPRAP

FOR AREAS STABILIZED WITH RIPRAP, PERMANENT STABILIZATION MEANS THAT SLOPES STABILIZED WITH RIPRAP HAVE AN APPROPRIATE BACKING OF AN APPROVED GEOTEXTILE TO PREVENT SOIL MOVEMENT FROM BEHIND THE RIPRAP.

4.5. DITCHES, CHANNELS, AND SWALES

FOR OPEN CHANNELS, PERMANENT STABILIZATION MEANS THE CHANNEL IS STABILIZED WITH MATURE VEGETATION AT LEAST THREE INCHES IN HEIGHT, WITH WELL-GRADED RIPRAP LINING, OR WITH ANOTHER NON-EROSIVE LINING CAPABLE OF WITHSTANDING THE ANTICIPATED FLOW VELOCITIES AND FLOW DEPTHS WITHOUT RELIANCE ON CHECK DAMS TO SLOW FLOW. THERE MUST BE NO EVIDENCE OF SLUMPING OF THE LINING, UNDERCUTTING OF THE BANKS, OR DOWN CUTTING OF THE CHANNEL.

## XI. FERTILIZER REQUIREMENTS

1. TEMPORARY SEEDING FERTILIZER

APPLY A MINIMUM OF 500 LBS PER ACRE OF A COMPLETE 10-10-10 FERTILIZER (11.5 POUNDS PER 1000 SQUARE FEET) OR EQUIVALENT DURING TEMPORARY SEEDING OF GRASSES UNLESS A SOIL TEST INDICATES A DIFFERENT REQUIREMENT. INCORPORATE FERTILIZER AND LIME (IF USED) INTO THE TOP 4-6 INCHES OF THE SOIL BY DISKING OR OTHER MEANS WHERE CONDITIONS ALLOW. LIME IS NOT REQUIRED FOR TEMPORARY SEEDING UNLESS A SOIL TEST SHOWS THAT THE SOIL PH IS BELOW 5.0. IT IS DESIRABLE TO APPLY LIME DURING THE TEMPORARY SEEDING OPERATION TO BENEFIT THE LONG-TERM PERMANENT SEEDING. APPLY A MINIMUM OF 1.5 TONS OF LIME / ACRE (70LBS. / 1000 SQ. FT.).

2. PERMANENT SEEDING FERTILIZER

APPLY A MINIMUM OF 1000 LBS PER ACRE OF A COMPLETE 10-10-10 FERTILIZER (23 POUNDS PER 1000 SQUARE FEET) OR EQUIVALENT DURING PERMANENT SEEDING OF GRADES UNLESS A SOIL TEST INDICATES A DIFFERENT REQUIREMENT. INCORPORATE FERTILIZER AND LIME (IF USED) INTO THE TOP 4-6 INCHES OF THE SOIL BY DISKING OR OTHER MEANS WHERE CONDITIONS ALLOW. DO NOT MIX THE LIME AND THE FERTILIZER PRIOR TO THE FIELD APPLICATION. UNLESS A SPECIFIC SOIL TEST INDICATES OTHERWISE, APPLY 1 & 1/2 TONS OF GROUND COARSE TEXTURED AGRICULTURAL LIMESTONE PER ACRE (70 LBS. / 1000 SQ.FT.).

## XII. SWPP PREPARER CERTIFICATION

I HAVE PLACED MY SIGNATURE AND SEAL ON THE DESIGN DOCUMENTS SUBMITTED SIGNIFYING THAT I ACCEPT RESPONSIBILITY FOR THE DESIGN OF THE SYSTEM. FURTHER, I CERTIFY TO THE BEST OF MY KNOWLEDGE AND BELIEF THAT THE DESIGN IS CONSISTENT WITH THE REQUIREMENTS OF TITLE 48, CHAPTER 14 OF THE CODE OF LAWS OF SC, 1976 AS AMENDED, PURSUANT TO REGULATION 72-300 ET SEQ. (IF APPLICABLE), AND IN ACCORDANCE WITH THE TERMS AND CONDITIONS OF SCR100000.

SOUTH CAROLINA THOMAS & HUTTON ENGINEERING CO. No. C00285 CERTIFICATE OF AUTHORIZATION

SOUTH CAROLINA LICENSED PROFESSIONAL ENGINEER No. 25353 NATHAN B. LONG

PERMIT SET - FOR REVIEW PURPOSES ONLY

| NO. | REVISIONS | BY | DATE |
|---|---|---|---|

THOMAS & HUTTON
Engineering | Surveying | Planning | GIS | Consulting
50 Park of Commerce Way
Savannah, GA 31405 • 912.234.5300
www.thomasandhutton.com

BC BUCKWALTER, LLC
BLUFFTON, SOUTH CAROLINA
CONNECTOR ROAD TO PARCEL 4
ES & PC NOTES

| | |
|---|---|
| JOB NO: | J-25125.0004 |
| DATE: | 11/18/2021 |
| DRAWN: | HAC |
| DESIGNED: | HAC |
| REVIEWED: | NBL |
| APPROVED: | NBL |
| SCALE: | N/A |

EC1.1

# STORMWATER POLLUTION PREVENTION PLAN

## TEMPORARY SEEDING - COASTAL

| SPECIES | LBS/AC | JAN | FEB | MAR | APR | MAY | JUN | JUL | AUG | SEP | OCT | NOV | DEC |
|---|---|---|---|---|---|---|---|---|---|---|---|---|---|
| SANDY, DROUGHTY SITES | | | | | | | | | | | | | |
| BROWNTOP MILLET | 40 | | | X | X | X | X | X | X | | | | |
| RYE, GRAIN | 56 | X | X | X | | | | | | X | X | X | X |
| RYEGRASS | 50 | X | X | X | X | | | | | X | X | X | X |
| WELL DRAINED, CLAYEY/LOAMEY SITES | | | | | | | | | | | | | |
| BROWNTOP MILLET<br>JAPANESE MILLET | 40<br>40 | | | X | X | X | X | X | X | | | | |
| RYE, GRAIN<br>OATS | 56<br>75 | X | X | X | | | | | | X | X | X | X |
| RYEGRASS | 50 | X | X | X | X | | | | | X | X | X | X |

## PERMANENT SEEDING - COASTAL

| SPECIES | LBS/AC | JAN | FEB | MAR | APR | MAY | JUN | JUL | AUG | SEP | OCT | NOV | DEC |
|---|---|---|---|---|---|---|---|---|---|---|---|---|---|
| SANDY, DROUGHTY SITES | | | | | | | | | | | | | |
| BROWNTOP MILLET<br>BAHIAGRASS | 10<br>40 | | | X | X | X | X | X | X | | | | |
| BROWNTOP MILLET<br>BAHIAGRASS<br>SERICEA LESPEDEZA | 10<br>30<br>40 | | | X | X | X | X | X | X | | | | |
| BROWNTOP MILLET<br>ATLANTIC COASTAL<br>PANICGRASS | 10<br>15<br>PLS | | | X | X | X | X | | | | | | |
| BROWNTOP MILLET<br>SWITCHGRASS<br>(ALAMO)<br>LITTLE BLUESTEM<br>SERICEA LESPEDEZA | 10<br>8<br>PLS<br>4<br>20 | | | X | X | X | X | | | | | | |
| BROWNTOP MILLET<br>WEEPING LOVEGRASS | 10<br>8 | | | X | X | X | X | | | | | | |
| WELL DRAINED, CLAYEY/LOAMEY SITES | | | | | | | | | | | | | |
| BROWNTOP MILLET<br>BAHIAGRASS | 10<br>40 | | | X | X | X | X | X | X | | | | |
| RYE, GRAIN<br>BAHIAGRASS<br>CLOVER, CRIMSON (ANNUAL) | 10<br>40<br>5 | | | | | | | | | X | X | X | |
| BROWNTOP MILLET<br>BAHIAGRASS<br>SERICEA LESPEDEZA | 10<br>30<br>40 | | | X | X | X | X | X | X | | | | |
| BROWNTOP MILLET<br>BERMUDA, COMMON<br>SERICEA LESPEDEZA | 10<br>10<br>40 | | | X | X | X | X | X | X | | | | |
| BROWNTOP MILLET<br>BERMUDA, COMMON<br>KOBE LESPEDEZA (ANNUAL) | 10<br>12<br>10 | | | X | X | X | X | X | X | | | | |
| BROWNTOP MILLET<br>BAHIAGRASS<br>BERMUDA, COMMON<br>SERICEA LESPEDEZA | 10<br>20<br>6<br>40 | | | X | X | X | X | X | X | | | | |
| BROWNTOP MILLET<br>SWITCHGRASS<br>LITTLE BLUESTEM<br>INDIANGRASS | 10<br>8<br>PLS<br>3 | | | X | X | X | X | X | X | | | | |

## EROSION CONTROL LEGEND

| DESCRIPTION | PLAN SYMBOL |
|---|---|
| SILT FENCE | |
| CLEARING LIMITS | — CL — CL — |
| DIVERSION DIKE | DD |
| DIVERSION BERM | DB |
| TEMPORARY DIVERSION | TD |
| PERMANENT DIVERSION | PD |
| SUBSURFACE DRAIN | SSD |
| VEGETATED CHANNEL | |
| RIP RAP LINED CHANNEL | |
| ECB OR TRM LINED CHANNEL | |
| PAVED CHANNEL | PC |
| TREE PROTECTION | |
| SURFACE ROUGHENING | OR LG |
| TOP SOILING | |
| TEMPORARY SEEDING | TS |
| PERMANENT SEEDING | PS |
| MULCHING | M |

## EROSION CONTROL LEGEND

| DESCRIPTION | PLAN SYMBOL |
|---|---|
| EROSION CONTROL BLANKET OR TURF REINFORCEMENT MAT | |
| FLEXIBLE GROWTH MATRIX | FGM |
| BONDED FIBER MATRIX | BFM |
| SODDING | SO |
| SLOPED SODDING | |
| STAKED SOD | |
| STAKED SOD AROUND INLET | OR |
| RIPRAP | |
| OUTLET PROTECTION - RIP RAP | |
| OUTLET PROTECTION - ECB OR TRM | |
| DUST CONTROL | DC |
| POLYACRYLAMIDE (PAM) | PAM |
| SEDIMENT BASIN | |
| SEDIMENT BASIN WITH SKIMMER | |
| SEDIMENT TRAP | |
| ROCK SEDIMENT DIKE | |
| SEDIMENT TUBE | |

## EROSION CONTROL LEGEND

| DESCRIPTION | PLAN SYMBOL |
|---|---|
| ROCK CHECK DAM | OR |
| POROUS BAFFLES | |
| STABILIZED CONSTRUCTION ENTRANCE | |
| CONCRETE WASHOUT | |
| STORM DRAIN INLET PROTECTION - TYPE A FILTER FABRIC | A |
| STORM DRAIN INLET PROTECTION - TYPE A SEDIMENT TUBE | A |
| STORM DRAIN INLET PROTECTION - TYPE B HARDWARE FABRIC AND STONE | B |
| STORM DRAIN INLET PROTECTION - TYPE C BLOCK AND GRAVEL | C |
| STORM DRAIN INLET PROTECTION - TYPE D RIGID INLET FILTER | D |
| STORM DRAIN INLET PROTECTION - TYPE E SURFACE COURSE CURB INLET FILTER | E |
| STORM DRAIN INLET PROTECTION - TYPE F INLET TUBE | F |
| STORM DRAIN INLET PROTECTION - TYPE G IMPERVIOUS AREA | G |
| STORM DRAIN INLET PROTECTION - CATCH BASIN INSERT | I |
| PIPE SLOPE DRAINS | |
| TEMPORARY STREAM CROSSING | T |
| LEVEL SPREADER | |

## LIST OF ACRONYMS FOR SEDIMENT AND EROSION CONTROL

| | |
|---|---|
| AASHTO | AMERICAN ASSOCIATION OF STATE HIGHWAY AND TRANSPORTATION OFFICIALS |
| AMD | ACRYLAMIDE POLYMER |
| BFM | BONDED FIBER MATRIX |
| BMP(S) | BEST MANAGEMENT PRACTICE(S) |
| CFS | CUBIC FEET PER SECOND |
| CMP | CORRUGATED METAL PIPE |
| DHEC | DEPARTMENT OF HEATH AND ENVIRONMENTAL CONTROL |
| ECB | EROSION CONTROL BLANKET |
| EPA | UNITED STATES ENVIRONMENTAL PROTECTION AGENCY |
| EPSC | EROSION PREVENTION AND SEDIMENTATION CONTROL |
| FDA | UNITED STATES FOOD AND DRUG ADMINISTRATION |
| FGM | FLEXIBLE GROWTH MATRIX |
| HDPE | HIGH DENSITY POLYETHYLENE |
| MS4 | MUNICIPAL SEPARATE STORM SEWER SYSTEM |
| MSDS | MATERIAL SAFETY DATA SHEETS |
| NPDES | NATIONAL POLLUTANT DISCHARGE ELIMINATION SYSTEM |
| PAM | POLYACRYLAMIDE OR POLYMER |
| RCP | REINFORCED CONCRETE PIPE |
| SCS | SOIL CONSERVATION SERVICE |
| SWPPP | STORMWATER POLLUTION PREVENTION PROGRAM |
| TRM | TURF REINFORCEMENT MAT |
| VFS | VEGETATED FILTER STRIP |

## CONSTRUCTION SEQUENCE

| CONSTRUCTION ACTIVITY | SCHEDULE CONSIDERATION |
|---|---|
| **INITIAL PHASE** | |
| 1 OBTAIN COPIES OF ALL PLAN APPROVALS AND OTHER APPLICABLE PERMITS. | CONTRACTOR TO HAVE ONSITE AT ALL TIMES DURING CONSTRUCTION. |
| 2 FLAG THE WORK LIMITS AND BARRICADE TREES AND MARK BUFFER AREAS FOR PROTECTION. | HAVE LOCAL REGULATORY AGENCY INSPECT TREE BARRICADES. |
| 3 HOLD PRE CONSTRUCTION CONFERENCE AT LEAST ONE WEEK PRIOR TO STARTING CONSTRUCTION. | REVIEW TREE PROTECTION (BARRICADE) WITH OWNER AND LOCAL REGULATORY AGENCY. TAKE PICTURES OF ALL PROTECTED TREES AND LOCATIONS WHERE SITE WORK TIES INTO EXISTING TO DOCUMENT PREDEVELOPMENT PROCEDURES. |
| 4 INSTALL CONSTRUCTION ACCESS AND LAY DOWN AREAS | STABILIZE BARE AREAS IMMEDIATELY AND INSTALL CONSTRUCTION EXITS / ENTRANCES. |
| 5 CONSTRUCT SEDIMENT FENCES | INSTALL SEDIMENT FENCES AFTER CONSTRUCTION SITE IS ACCESSED. |
| 6 CONSTRUCT OUTLET PROTECTION. INSTALL SKIMMER. | INSTALL PRINCIPAL BASINS AFTER SEDIMENT FENCES IS INSTALLED. |
| 7 ESTABLISH RUNOFF CONTROL - DIVERSIONS, PERIMETER DIKES, WATER BARS, AND OUTLET PROTECTION. | INSTALL PRINCIPAL SEDIMENT TRAPS AND BEFORE LAND GRADING. INSTALL ADDITIONAL RUNOFF-CONTROL MEASURES DURING GRADING. |
| 8 LAND CLEARING AND GRADING-SITE PREPARATION CUTTING, FILLING AND GRADING, SEDIMENTATION TRAPS, BARRIERS, DIVERSIONS, DRAINS, SURFACE ROUGHENING. | BEGIN MAJOR CLEARING AND GRADING AFTER PRINCIPAL SEDIMENT AND KEY RUNOFF-CONTROL MEASURES ARE INSTALLED. CLEAR BORROW AND DISPOSAL AREAS ONLY AS NEEDED. INSTALL ADDITIONAL CONTROL MEASURES AS GRADING PROGRESSES. MARK TREES AND BUFFER AREAS FOR PRESERVATION. |
| **CONSTRUCTION PHASE** | |
| 1 RUNOFF CONVEYANCE SYSTEM- INSTALL STORM DRAINS, STABILIZE BANKS, CHANNELS, INSTALL INLET AND OUTLET PROTECTION, SLOPE DRAINS. | WHERE NECESSARY, STABILIZE BANKS AS EARLY AS POSSIBLE. INSTALL PRINCIPAL RUNOFF CONVEYANCE SYSTEM WITH RUNOFF- CONTROL MEASURES. INSTALL REMAINDER OF SYSTEM AFTER GRADING. |
| 2 INSTALL WASTEWATER COLLECTION, WATER DISTRIBUTION, AND STORM DRAINAGE SYSTEMS | APPLY TEMPORARY OR PERMANENT STABILIZATION MEASURES IMMEDIATELY ON ALL DISTURBED AREAS WHERE WORK IS DELAYED OR COMPLETE. |
| 3 SURFACE STABILIZATION-TEMPORARY AND PERMANENT SEEDING, MULCHING, SODDING, RIP RAP. | APPLY TEMPORARY OR PERMANENT STABILIZATION MEASURES IMMEDIATELY ON ALL DISTURBED AREAS WHERE WORK IS DELAYED OR COMPLETE. |
| **STABILIZATION PHASE** | |
| 4 BUILDING CONSTRUCTION- BUILDINGS UTILITIES, ROADS, ETC. | INSTALL NECESSARY EROSION AND SEDIMENTATION CONTROL PRACTICES AS WORK TAKES PLACE. |
| 5 LANDSCAPING AND FINAL STABILIZATION - TOPSOILING, TREES AND SHRUBS, PERMANENT SEEDING, MULCHING, SODDING, RIP RAP. REMOVE SKIMMER. | LAST CONSTRUCTION PHASE--STABILIZE ALL OPEN AREAS, INCLUDING BORROW AND SPOIL AREAS. REMOVE AND STABILIZE ALL TEMPORARY CONTROL MEASURES. |

PERMIT SET - FOR REVIEW PURPOSES ONLY

| NO. | REVISIONS | BY | DATE |
|---|---|---|---|


THOMAS & HUTTON
Engineering | Surveying | Planning | GIS | Consulting
50 Park of Commerce Way
Savannah, GA 31405 • 912.234.5300
www.thomasandhutton.com


BC BUCKWALTER, LLC
BLUFFTON, SOUTH CAROLINA
CONNECTOR ROAD TO PARCEL 4
ES & PC NOTES

| | |
|---|---|
| JOB NO: | J-25125.0004 |
| DATE: | 11/18/2021 |
| DRAWN: | HAC |
| DESIGNED: | HAC |
| REVIEWED: | NBL |
| APPROVED: | NBL |
| SCALE: | N/A |

EC1.2

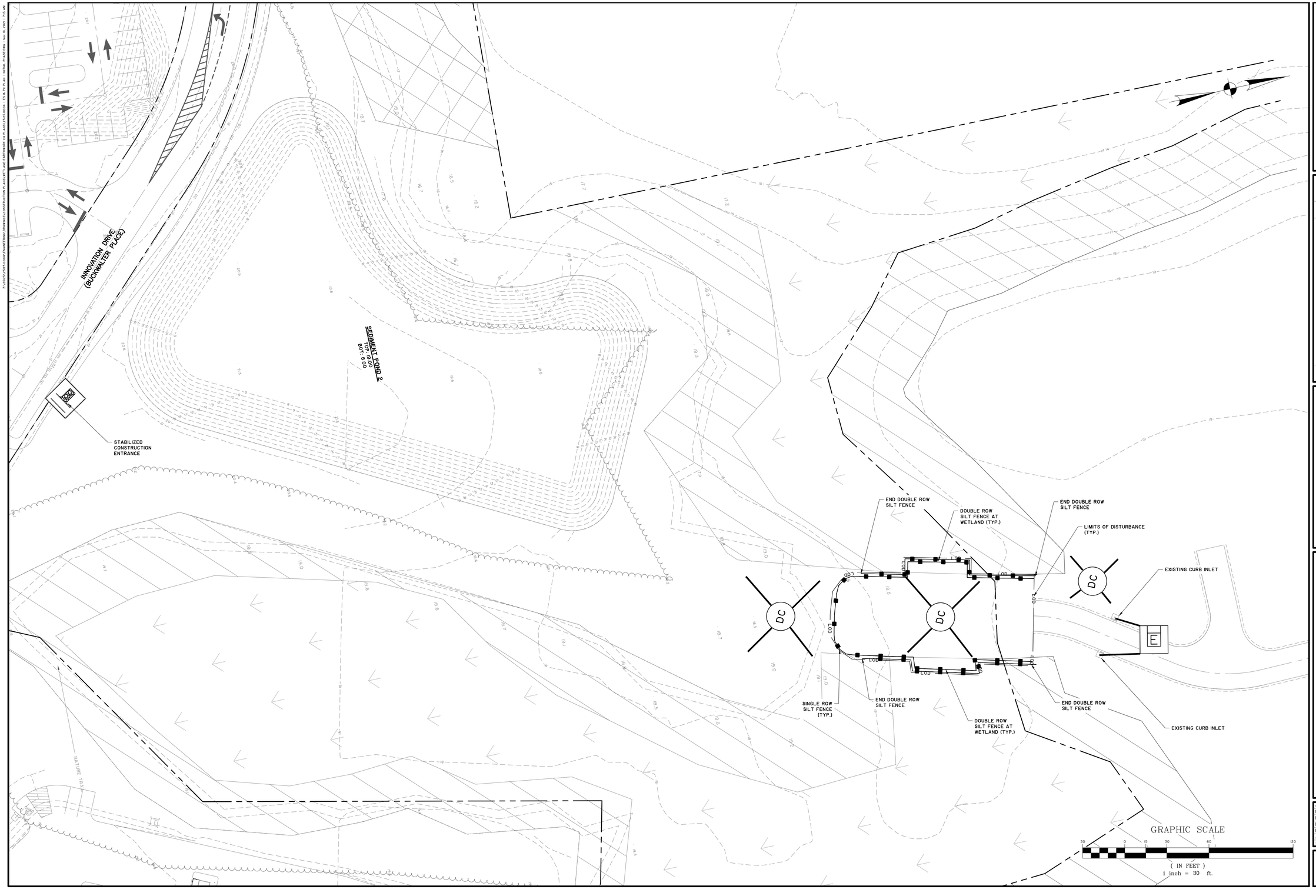


PERMIT SET - FOR REVIEW PURPOSES ONLY

| NO. | REVISIONS | BY | DATE |
|---|---|---|---|


THOMAS & HUTTON
50 Park of Commerce Way
Savannah, GA 31405 • 912.234.5300
www.thomasandhutton.com


**BC BUCKWALTER, LLC**
BLUFFTON, SOUTH CAROLINA

CONNECTOR ROAD TO PARCEL 4

**ES & PC PLAN – INITIAL PHASE**

| | |
|---|---|
| JOB NO: | J-25125.0004 |
| DATE: | 11/18/2021 |
| DRAWN: | HAC |
| DESIGNED: | HAC |
| REVIEWED: | NBL |
| APPROVED: | NBL |
| SCALE: | 1" = 30' |

**EC2.1**

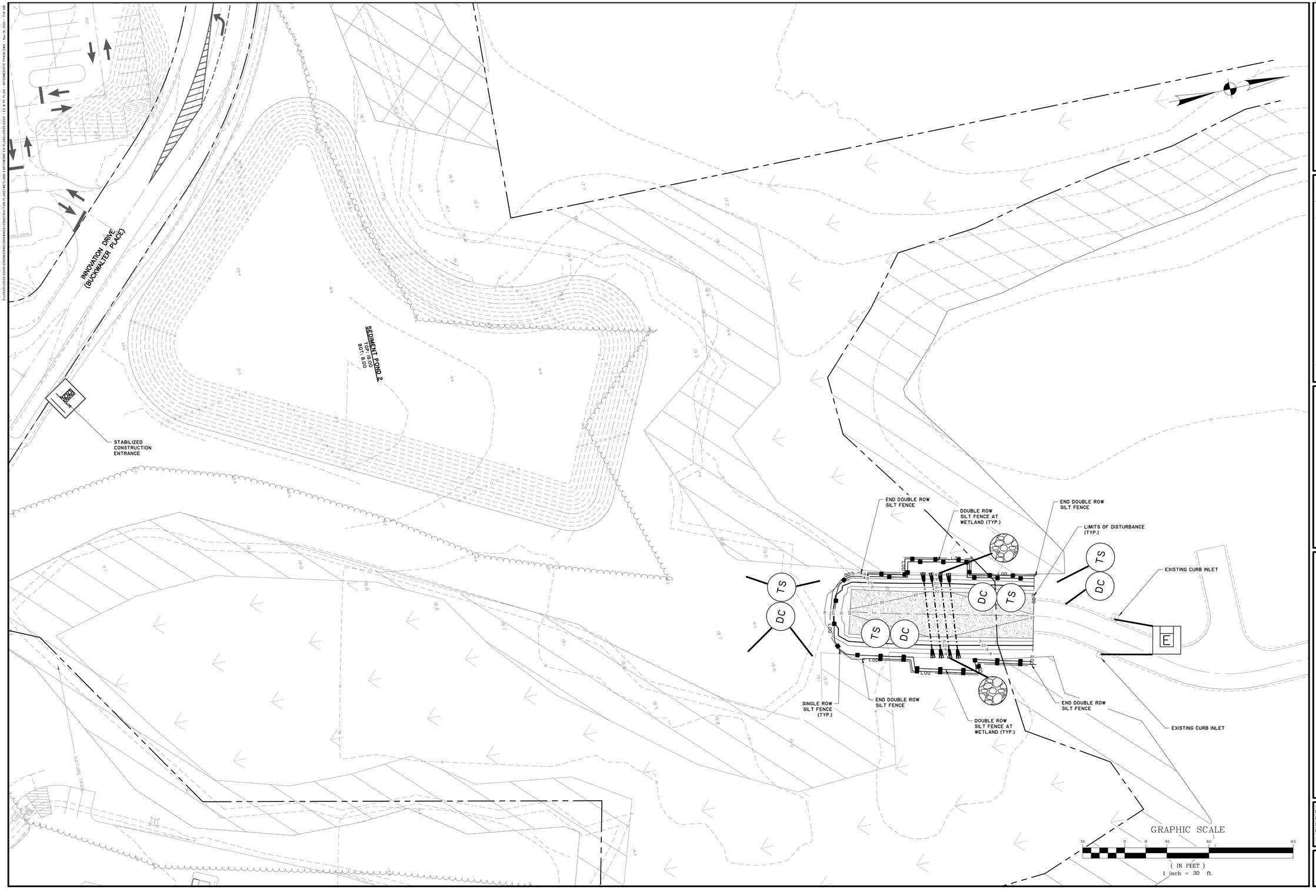


Z:\J25125.0004\ENGINEERING\DRAWINGS\CONSTRUCTION PLANS\WETLAND EARTHWORK & PLANS\J25125.0004 - ES & PC PLAN - INTERMEDIATE PHASE.DWG - Nov 18, 2021 - 7:14 AM

SOUTH CAROLINA PROFESSIONAL ENGINEER
No. 25353
NATHAN B. LONG

SOUTH CAROLINA
THOMAS & HUTTON ENGINEERING CO.
No. C00285
CERTIFICATE OF AUTHORITY

PERMIT SET - FOR REVIEW PURPOSES ONLY

| NO. | REVISIONS | BY | DATE |
|---|---|---|---|


THOMAS & HUTTON
50 Park of Commerce Way
Savannah, GA 31405 • 912.234.5300
www.thomasandhutton.com


**BC BUCKWALTER, LLC**
BLUFFTON, SOUTH CAROLINA

CONNECTOR ROAD TO PARCEL 4

**ES & PC PLAN - INTERMEDIATE PHASE**

| | |
|---|---|
| JOB NO: | J-25125.0004 |
| DATE: | 11/18/2021 |
| DRAWN: | HAC |
| DESIGNED: | HAC |
| REVIEWED: | NBL |
| APPROVED: | NBL |
| SCALE: | 1" = 30' |

# EC3.1

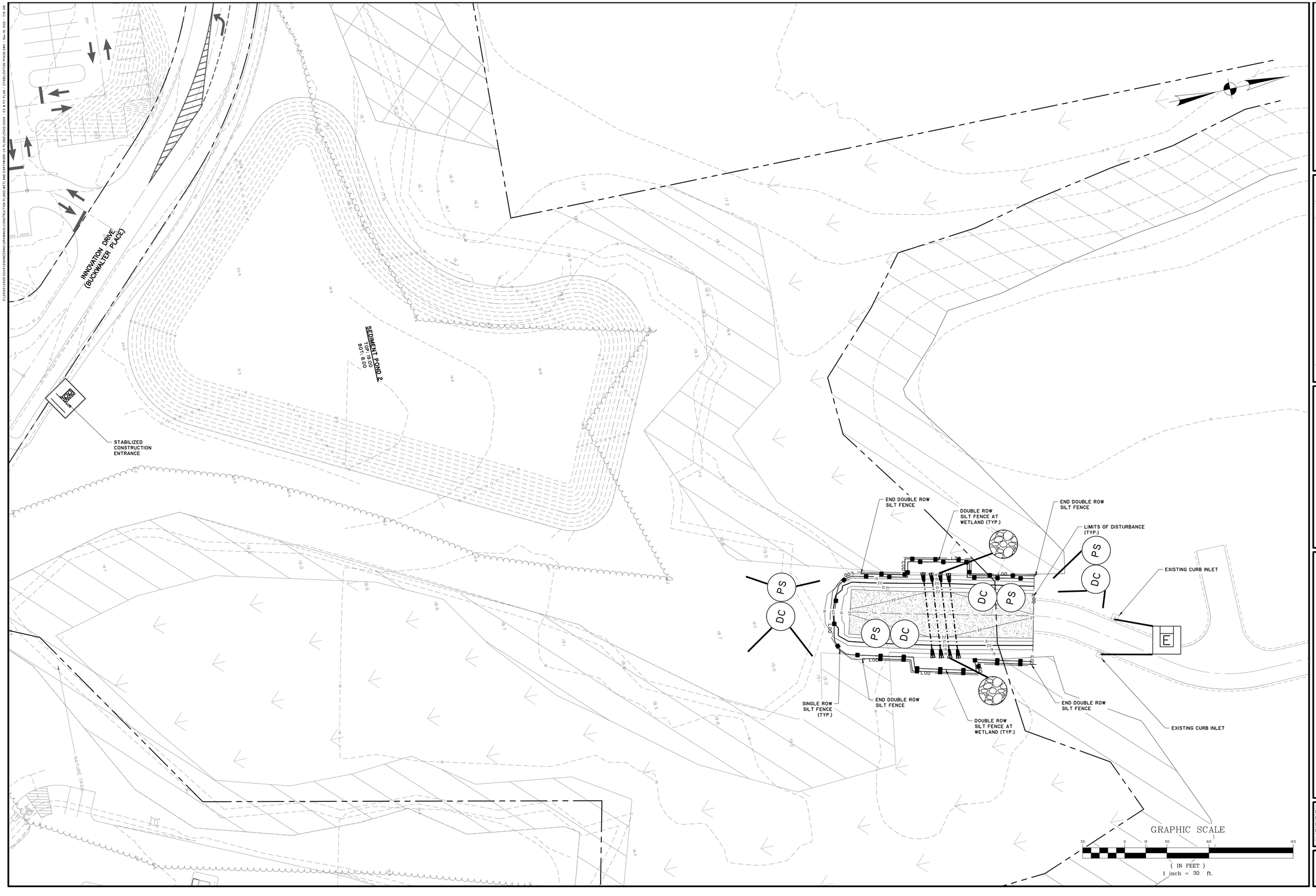


PERMIT SET - FOR REVIEW PURPOSES ONLY

| NO. | REVISIONS | BY | DATE |
|---|---|---|---|


THOMAS & HUTTON
50 Park of Commerce Way
Savannah, GA 31405 • 912.234.5300
www.thomasandhutton.com


**BC BUCKWALTER, LLC**
BLUFFTON, SOUTH CAROLINA

CONNECTOR ROAD TO PARCEL 4

**ES & PC PLAN - STABILIZATION PHASE**

| | |
|---|---|
| JOB NO: | J-25125.0004 |
| DATE: | 11/18/2021 |
| DRAWN: | HAC |
| DESIGNED: | HAC |
| REVIEWED: | NBL |
| APPROVED: | NBL |
| SCALE: | 1" = 30' |

# EC4.1

Z:\25125\25125.0004\ENGINEERING\DRAWINGS\CONSTRUCTION PLANS\WETLAND EARTHWORK C4 PLANS\25125.0004 - ES & PC DETAILS.DWG - Nov 19, 2021 - 7:15 AM

# RIPRAP OUTLET PROTECTION

## PIPE OUTLET TO FLAT AREA -- NO WELL DEFINED CHANNEL

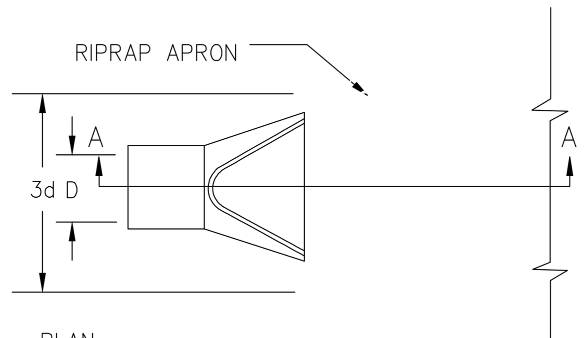


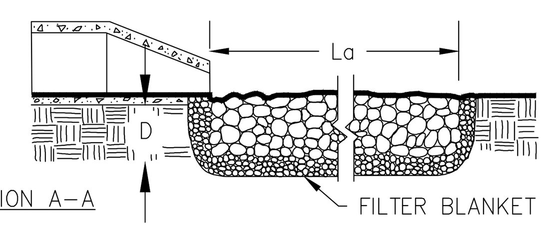


NOTES:

1. La IS THE LENGTH OF THE RIPRAP APRON.
2. D = 1.5 TIMES THE MAXIMUM STONE DIAMETER BUT NOT LESSTHAN 6".
3. IN A WELL-DEFINED CHANNEL, EXTEND THE APRON UP THE CHANNEL BANKS TO AN ELEVATION OF 6" ABOVE THE MAXIMUM TAILWATER DEPTH OR TO THE TOP OF THE BANK (WHICHEVER IS LESS).
4. A FILTER BLANKET OR FILTER FABRIC SHOULD BE INSTALLED BETWEEN THE RIPRAP AND THE SOIL FOUNDATION.

## PIPE OUTLET TO WELL DEFINED CHANNEL

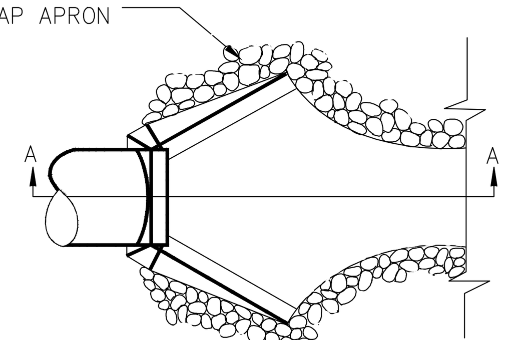


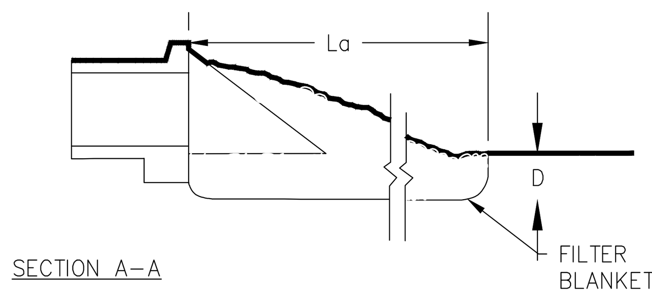


### DC DUST CONTROL ON DISTURBED AREAS

**DEFINITION**

Controlling surface and air movement of dust on land-disturbing activities.

**PURPOSE**

- Prevent the movement of dust from exposed soil surfaces.
- Prevent the movement of airborne substances that may be harmful to health.

**INSTALLATION**

- Apply according to approved plan, if shown.
- Mulch disturbed areas and tackify with resins such as asphalt, Curasol or Terratack according to manufacturer's recommendations.
- Stabilize disturbed areas with temporary or permanent vegetation.
- Irrigate disturbed areas until surface is wet.
- Cover surfaces with crushed stone or gravel.

32

DC

- Apply calcium chloride at a rate to keep surfaces moist.
- Apply spray-on adhesives to mineral soils (not muck soils) as described in Table 1.

**Table 1. Spray-On Adhesive Application Requirements**

| Adhesive | Water Dilution | Nozzle Type | Application (Gal./Acre) |
|---|---|---|---|
| Anionic asphalt emulsion | 7:1* | Coarse spray | 1,200 |
| Latex emulsion | 12.5:1 * | Fine spray | 235 |
| Resin-in-water emulsion | 4:1* | Fine spray | 300 |

*Use manufacturer's recommendations when available.

## DUST CONTROL MEASURES

NOT TO SCALE

DC

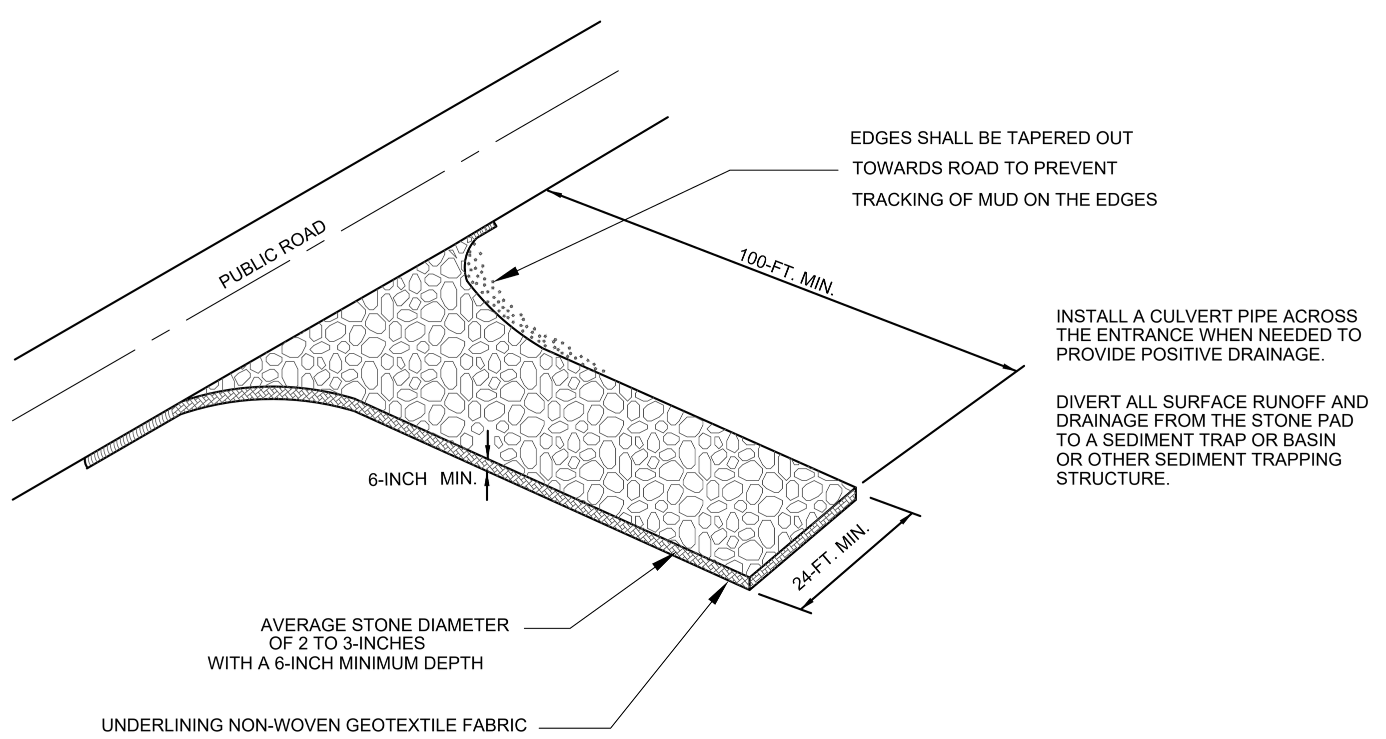


WHEN AND WHERE TO USE IT:

STABILIZED CONSTRUCTION ENTRANCES SHOULD BE USED AT ALL POINTS WHERE TRAFFIC WILL BE LEAVING A CONSTRUCTION SITE AND MOVING DIRECTLY ONTO A PUBLIC ROAD.

IMPORTANT CONSIDERATIONS:

IF WASHING IS USED, PROVISIONS MUST BE MADE TO INTERCEPT THE WASH WATER AND TRAP THE SEDIMENT BEFORE IT IS CARRIED OFFSITE. WASHDOWN FACILITIES SHALL BE REQUIRED AS DIRECTED BY SCDHEC AS NEEDED. WASHDOWN AREAS IN GENERAL MUST BE ESTABLISHED WITH CRUSHED GRAVEL AND DRAIN INTO A SEDIMENT TRAP OR SEDIMENT BASIN.

CONSTRUCTION ENTRANCES SHOULD BE USED IN CONJUNCTION WITH THE STABILIZATION OF CONSTRUCTION ROADS TO REDUCE THE AMOUNT OF MUD PICKED UP BY VEHICLES.

INSTALLATION:

REMOVE ALL VEGETATION AND ANY OBJECTIONABLE MATERIAL FROM THE FOUNDATION AREA.

DIVERT ALL SURFACE RUNOFF AND DRAINAGE FROM STONES TO A SEDIMENT TRAP OR BASIN.

INSTALL A NON-WOVEN GEOTEXTILE FABRIC PRIOR TO PLACING ANY STONE.

INSTALL A CULVERT PIPE ACROSS THE ENTRANCE WHEN NEEDED TO PROVIDE POSITIVE DRAINAGE.

THE ENTRANCE SHALL CONSIST OF 1-INCH TO 3-INCH D50 STONE PLACED AT A MINIMUM DEPTH OF 6-INCHES.

MINIMUM DIMENSIONS OF THE ENTRANCE SHALL BE 24-FEET WIDE BY 100-FEET LONG, AND MAY BE MODIFIED AS NECESSARY TO ACCOMMODATE SITE CONSTRAINTS.

THE EDGES OF THE ENTRANCE SHALL BE TAPERED OUT TOWARDS THE ROAD TO PREVENT TRACKING OF MUD AT THE EDGE OF THE ENTRANCE.

INSPECTION AND MAINTENANCE:

CHECK FOR MUD AND SEDIMENT BUILDUP AND PAD INTEGRITY. MAKE DAILY INSPECTIONS DURING PERIODS OF WET WEATHER. MAINTENANCE IS REQUIRED MORE FREQUENTLY IN WET WEATHER CONDITIONS. RESHAPE THE STONE PAD AS NEEDED FOR DRAINAGE AND RUNOFF CONTROL.

WASH OR REPLACE STONES AS NEEDED. THE STONE IN THE ENTRANCE SHOULD BE WASHED OR REPLACED WHENEVER THE ENTRANCE FAILS TO REDUCE MUD BEING CARRIED OFF-SITE BY VEHICLES.

FREQUENT WASHING WILL EXTEND THE USEFUL LIFE OF STONE.

IMMEDIATELY REMOVE MUD AND SEDIMENT TRACKED OR WASHED ONTO PUBLIC ROADS BY BRUSHING OR SWEEPING. FLUSHING SHOULD ONLY BE USED WHEN THE WATER CAN BE DISCHARGED TO A SEDIMENT TRAP OR BASIN.

REPAIR ANY BROKEN PAVEMENT IMMEDIATELY.

## STABILIZED CONSTRUCTION ENTRANCE

NOT TO SCALE

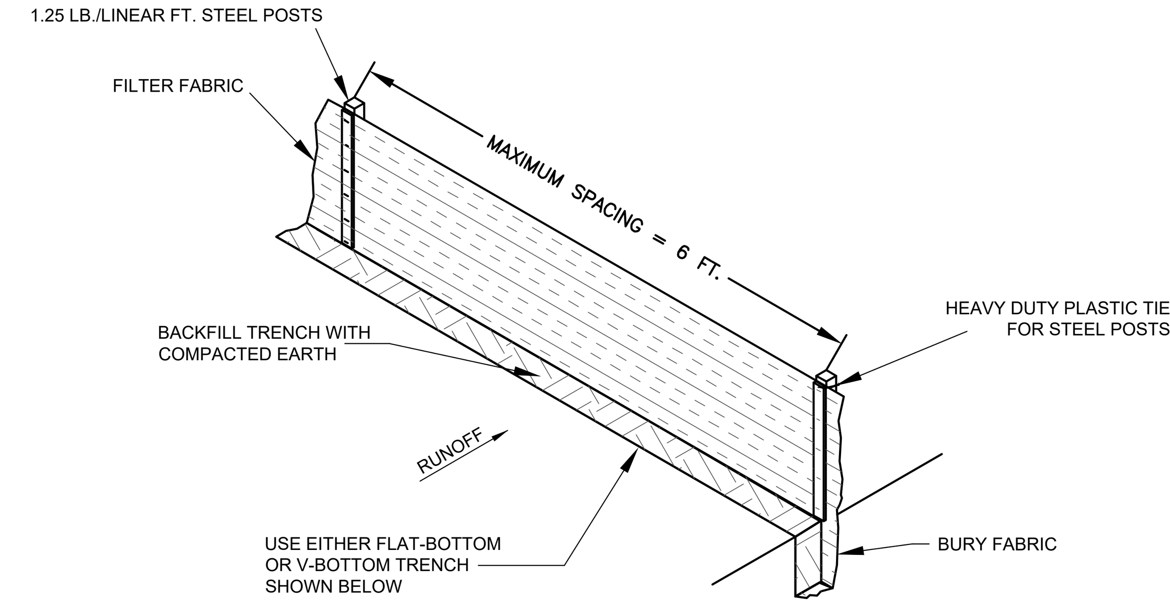


SILT FENCE INSTALLATION

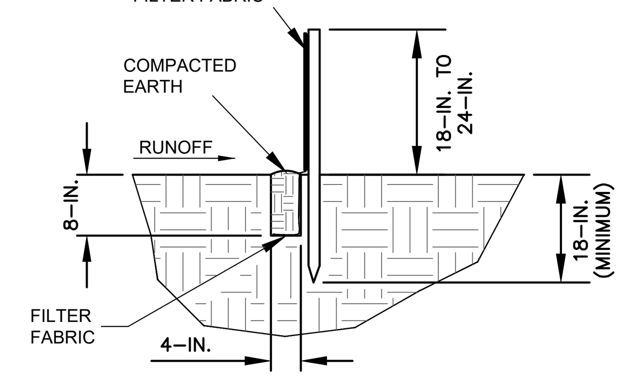


FLAT-BOTTOM TRENCH DETAIL

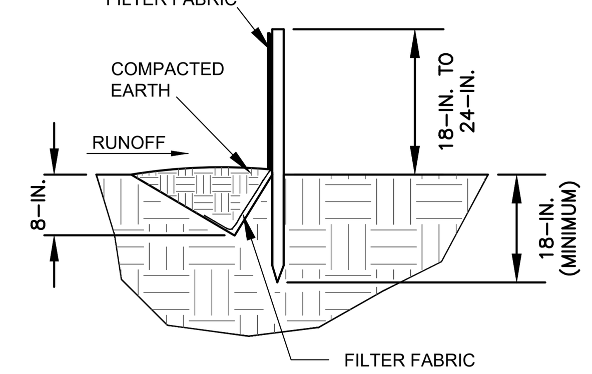


V-SHAPED TRENCH DETAIL

WHEN AND WHERE TO USE IT:
SILT FENCE IS APPLICABLE IN AREAS:

WHERE THE MAXIMUM SHEET OR OVERLAND FLOW PATH LENGTH TO THE FENCE IS 100-FEET.
WHERE THE MAXIMUM SLOPE STEEPNESS (NORMAL [PERPENDICULAR] TO FENCE LINE) IS 2H:1V.
THAT DO NOT RECEIVE CONCENTRATED FLOWS GREATER THAN 0.5 CFS.

DO NOT PLACE SILT FENCE ACROSS CHANNELS OR USE IT AS A VELOCITY CONTROL BMP.

MATERIALS:
STEEL POSTS
USE 48-INCH LONG STEEL POSTS THAT MEET THE FOLLOWING MINIMUM PHYSICAL REQUIREMENTS:
COMPOSED OF HIGH STRENGTH STEEL WITH MINIMUM YIELD STRENGTH OF 50,000 PSI.
HAVE A STANDARD "T" SECTION WITH A NOMINAL FACE WIDTH OF 1.38-INCHES AND NOMINAL "T" LENGTH OF 1.48-INCHES.
WEIGH 1.25 POUNDS PER FOOT (± 8%).
HAVE A SOIL STABILIZATION PLATE WITH A MINIMUM CROSS SECTION AREA OF 17-SQUARE INCHES ATTACHED TO THE STEEL POSTS.
PAINTED WITH A WATER BASED BAKED ENAMEL PAINT.

USE STEEL POSTS WITH A MINIMUM LENGTH OF 4-FEET, WEIGHING 1.25 POUNDS PER LINEAR FOOT (± 8%) WITH PROJECTIONS TO AID IN FASTENING THE FABRIC. EXCEPT WHEN HEAVY CLAY SOILS ARE PRESENT ON SITE, STEEL POSTS WILL HAVE A METAL SOIL STABILIZATION PLATE WELDED NEAR THE BOTTOM SUCH THAT WHEN THE POST IS DRIVEN TO THE PROPER DEPTH, THE PLATE WILL BE BELOW THE GROUND LEVEL FOR ADDED STABILITY.
THE SOIL PLATES SHOULD HAVE THE FOLLOWING CHARACTERISTICS:
BE COMPOSED OF MINIMUM 15 GAUGE STEEL.
HAVE A MINIMUM CROSS SECTION AREA OF 17-SQUARE INCHES.

GEOTEXTILE FILTER FABRIC:
FILTER FABRIC IS:
COMPOSED OF FIBERS CONSISTING OF LONG CHAIN SYNTHETIC POLYMERS COMPOSED OF AT LEAST 85% BY WEIGHT OF POLYOLEFINS, POLYESTERS, OR POLYAMIDES.
FORMED INTO A NETWORK SUCH THAT THE FILAMENTS OR YARNS RETAIN DIMENSIONAL STABILITY RELATIVE TO EACH OTHER.
FREE OF ANY TREATMENT OR COATING WHICH MIGHT ADVERSELY ALTER ITS PHYSICAL PROPERTIES AFTER INSTALLATION.
FREE OF DEFECTS OR FLAWS THAT SIGNIFICANTLY AFFECT ITS PHYSICAL AND/OR FILTERING PROPERTIES.
CUT TO A MINIMUM WIDTH OF 36 INCHES.

USE ONLY FABRIC APPEARING ON SCDOT APPROVAL SHEET #34 MEETING THE REQUIREMENTS OF THE MOST CURRENT EDITION OF THE SCDOT STANDARD SPECIFICATIONS FOR HIGHWAY CONSTRUCTION.

INSTALLATION:
EXCAVATE A TRENCH APPROXIMATELY 6-INCHES WIDE AND 6-INCHES DEEP WHEN PLACING FABRIC BY HAND. PLACE 12-INCHES OF GEOTEXTILE FABRIC INTO THE 6-INCH DEEP TRENCH, EXTENDING THE REMAINING 6-INCHES TOWARDS THE UPSLOPE SIDE OF THE TRENCH. BACKFILL THE TRENCH WITH SOIL OR GRAVEL AND COMPACT. BURY 12-INCHES OF FABRIC INTO THE GROUND WHEN PNEUMATICALLY INSTALLING SILT FENCE WITH A SLICING METHOD. PURCHASE FABRIC IN CONTINUOUS ROLLS AND CUT TO THE LENGTH OF THE BARRIER TO AVOID JOINTS. WHEN JOINTS ARE NECESSARY, WRAPPED THE FABRIC TOGETHER AT A SUPPORT POST WITH BOTH ENDS FASTENED TO THE POST, WITH A 6-INCH MINIMUM OVERLAP. INSTALL POSTS TO A MINIMUM DEPTH OF 24-INCHES. INSTALL POSTS A MINIMUM OF 1- TO 2- INCHES ABOVE THE FABRIC, WITH NO MORE THAN 3-FEET OF THE POST ABOVE THE GROUND. SPACE POSTS TO MAXIMUM 6-FEET CENTERS. ATTACH FABRIC TO WOOD POSTS USING STAPLES MADE OF HEAVY-DUTY WIRE AT LEAST 1-1/2-INCH LONG, SPACED A MAXIMUM OF 6-INCHES APART. STAPLE A 2-INCH WIDE LATHE OVER THE FILTER FABRIC TO SECURELY FASTEN IT TO THE UPSLOPE SIDE OF WOODEN POSTS. ATTACH FABRIC TO THE STEEL POSTS USING HEAVY-DUTY PLASTIC TIES THAT ARE EVENLY SPACED AND PLACED IN A MANNER TO PREVENT SAGGING OR TEARING OF THE FABRIC. IN CALL CASES, TIES SHOULD BE AFFIXED IN NO LESS THAN 4 PLACES. INSTALL THE FABRIC A MINIMUM OF 24-INCHES ABOVE THE GROUND. WHEN NECESSARY, THE HEIGHT OF THE FENCE ABOVE GROUND MAY BE GREATER THAN 24-INCHES. IN TIDAL AREAS, EXTRA SILT FENCE HEIGHT MAY BE REQUIRED. THE POST HEIGHT WILL BE TWICE THE EXPOSED POST HEIGHT. POST SPACING WILL REMAIN THE SAME AND EXTRA HEIGHT FABRIC WILL BE 4-, 5-, OR 6-FEET TALL. LOCATE SILT FENCE CHECKS EVERY 100 FEET MAXIMUM AND AT LOW POINTS. INSTALL THE FENCE PERPENDICULAR TO THE DIRECTION OF FLOW AND PLACE THE FENCE THE PROPER DISTANCE FROM THE TOE OF STEEP SLOPES TO PROVIDE SEDIMENT STORAGE AND ACCESS FOR MAINTENANCE AND CLEANOUT.

INSPECTION AND MAINTENANCE:
CHECK FOR SEDIMENT BUILDUP AND FENCE INTEGRITY. CHECK WHERE RUNOFF HAS ERODED A CHANNEL BENEATH THE FENCE, OR WHERE THE FENCE HAS SAGGED OR COLLAPSED BY FENCE OVERTOPPING. IF THE FENCE FABRIC TEARS, BEGINS TO DECOMPOSE, OR IN ANY WAY BECOMES INEFFECTIVE, REPLACE THE SECTION OF FENCE IMMEDIATELY. REMOVE SEDIMENT ACCUMULATED ALONG THE FENCE WHEN IT REACHES 1/3 THE HEIGHT OF THE FENCE, ESPECIALLY IF HEAVY RAINS ARE EXPECTED. REMOVE TRAPPED SEDIMENT FROM THE SITE OR STABILIZE IT ON SITE. REMOVE SILT FENCE WITHIN 30 DAYS AFTER FINAL STABILIZATION IS ACHIEVED OR

AFTER TEMPORARY BEST MANAGEMENT PRACTICES (BMPS) ARE NO LONGER NEEDED. PERMANENTLY STABILIZE DISTURBED AREAS RESULTING FROM FENCE REMOVAL.

## SILT FENCE

NOT TO SCALE

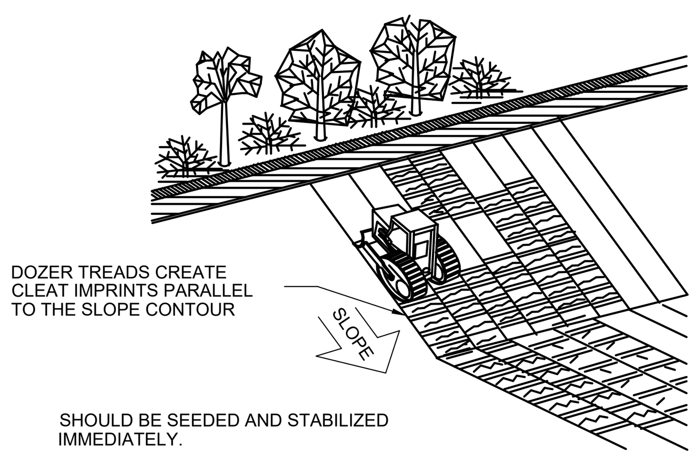


TRACKING

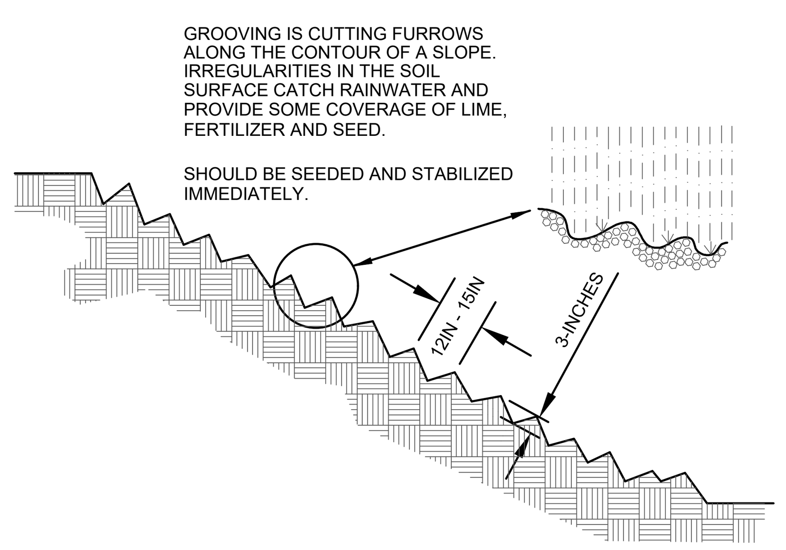


SLOPE GROOVING

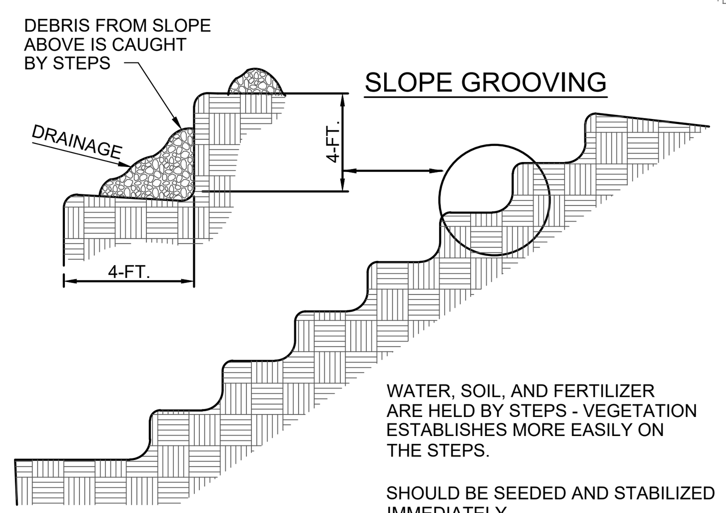


STAIR-STEP GRADING

OR LG

## LAND GRADING TECHNIQUES

NOT TO SCALE

SOUTH CAROLINA THOMAS & HUTTON ENGINEERING CO. No. C00285 CERTIFICATE OF AUTHORIZATION

SOUTH CAROLINA LICENSED PROFESSIONAL ENGINEER No. 25353 NATHAN B. LONG

PERMIT SET - FOR REVIEW PURPOSES ONLY

| NO. | REVISIONS | BY | DATE |
|---|---|---|---|

THOMAS & HUTTON

BC BUCKWALTER, LLC
BLUFFTON, SOUTH CAROLINA

CONNECTOR ROAD TO PARCEL 4

ES & PC DETAILS

| | |
|---|---|
| JOB NO: | J-25125.0004 |
| DATE: | 11/18/2021 |
| DRAWN: | HAC |
| DESIGNED: | HAC |
| REVIEWED: | NBL |
| APPROVED: | NBL |
| SCALE: | NTS |

EC5.1

| CURVE | RADIUS | LENGTH | CH BEARING | CH LENGTH | DELTA |
|---|---|---|---|---|---|
| C1 | 25.00' | 40.10' | N 50°19'56" E | 35.94' | 91°53'53" |
| C2 | 1885.00' | 69.00' | S 21°25'21" W | 68.99' | 2°05'50" |
| C3 | 1885.00' | 449.19' | S 13°32'50" W | 448.12' | 13°39'12" |
| C4 | 25.00' | 38.44' | N 39°40'04" W | 34.78' | 88°06'07" |
| C5 | 1835.00' | 428.22' | S 13°25'04" W | 427.25' | 13°22'14" |
| C6 | 1835.00' | 86.63' | S 21°27'20" W | 86.62' | 2°42'18" |
| C7 | 1885.00' | 260.25' | S 10°40'33" W | 260.04' | 7°54'38" |
| C8 | 1885.00' | 15.25' | S 14°51'46" W | 15.25' | 0°27'49" |
| C9 | 1885.00' | 164.78' | S 17°35'56" W | 164.73' | 5°00'31" |
| C10 | 1885.00' | 62.35' | S 16°02'32" W | 62.35' | 1°53'43" |
| C11 | 1885.00' | 102.43' | S 18°32'47" W | 102.41' | 3°06'48" |
| C12 | 1885.00' | 440.28' | S 13°24'42" W | 439.28' | 13°22'57" |

| LINE | BEARING | LENGTH |
|---|---|---|
| L1 | S 83°43'08" E | 50.01' |
| L2 | N 15°48'56" E | 4.00' |
| L3 | S 74°11'04" E | 10.00' |
| L4 | S 15°48'56" W | 4.00' |
| L5 | N 74°11'04" W | 10.00' |
| L6 | N 07°55'46" E | 13.31' |
| L7 | N 05°19'32" E | 105.88' |

## LEGEND

- MEANDER POINT (NO MONUMENT)
- CONCRETE MONUMENT (FOUND)
- CONCRETE MONUMENT (SET)
- IRON PIPE (FOUND)
- 3/4" IRON PIPE W/ CAP (SET)
- IRON REBAR (FOUND)
- IRON REBAR (SET)

GRID NORTH - SC SPCS83

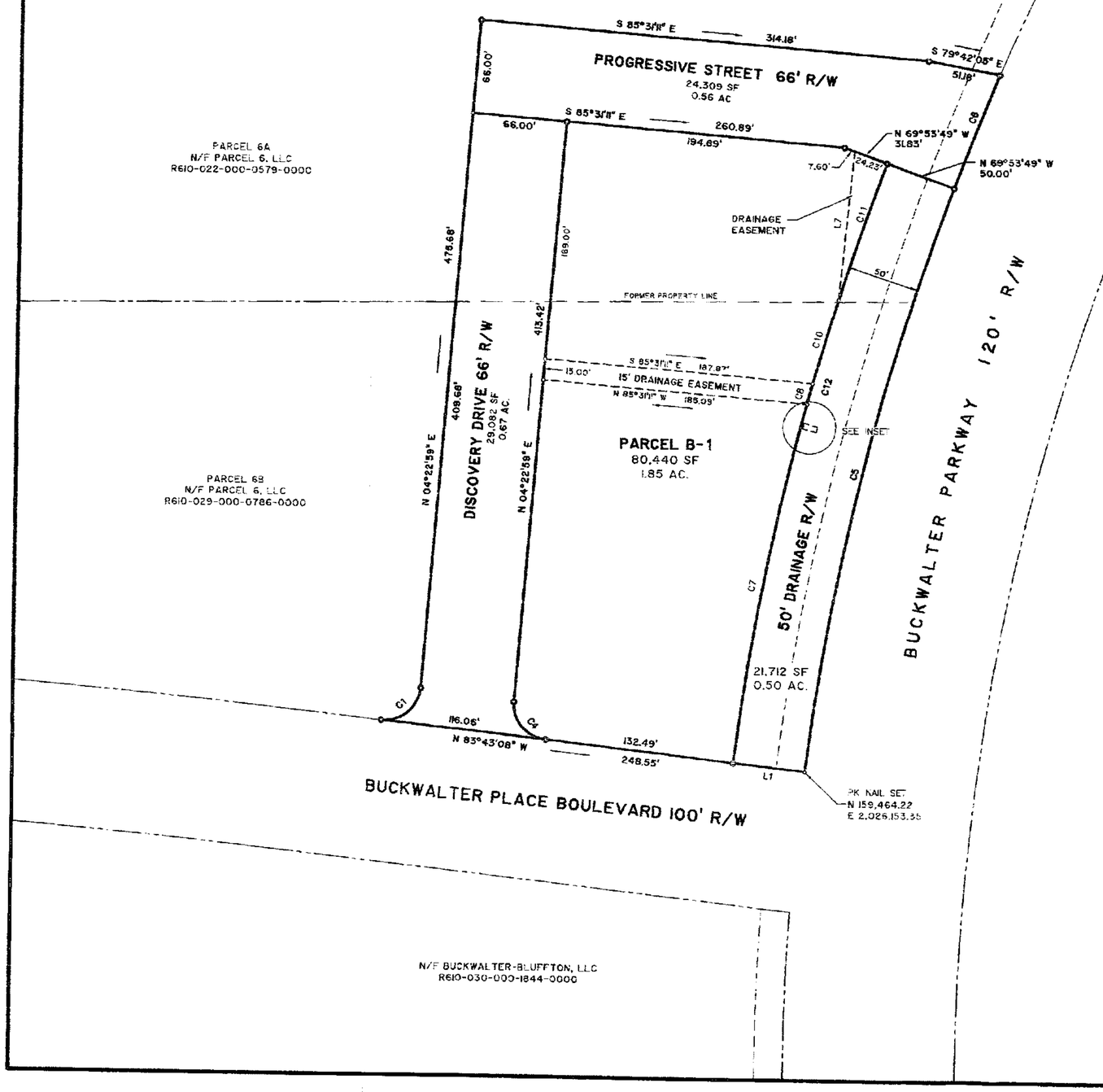


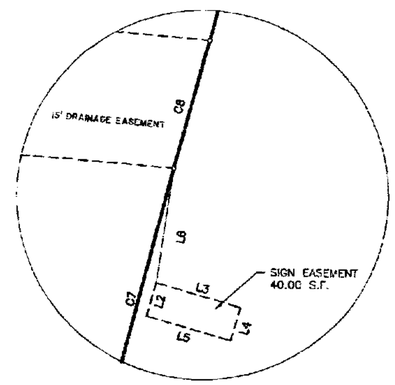


INSET: 1"=20'

BEAUFORT COUNTY SC - ROD
BK 00133 PG 0151
FILE NUM 2011064032
12/19/2011 01:53:07 PM
REC'D BY B BING RCPT# 663818
RECORDING FEES 10.00

Town of Bluffton
Approved 12/19/11

## NOTES

1. TAX MAP NO. (PARENT TRACT): R610-022-000-0579-0000 & R610-029-000-0786-0000
2. ACCORDING TO F.I.R.M. MAP NO. 450025, PANEL 0085D, REVISED 9-29-86, THE PROPERTY SHOWN ON THIS PLAT IS LOCATED IN ZONE C.
3. COORDINATES AND DIRECTIONS SHOWN ON THIS SURVEY ARE BASED ON SOUTH CAROLINA STATE PLANE COORDINATE SYSTEM (NAD83).
4. THIS SURVEY IS VALID ONLY IF THE PRINT OF SAME HAS THE ORIGINAL SIGNATURE AND EMBOSSED SEAL OF THE LAND SURVEYOR.
5. A TITLE SEARCH WAS NOT PERFORMED BY THOMAS & HUTTON ENGINEERING COMPANY AT THE TIME OF THIS SURVEY.
6. THE PROPERTY PLATTED HEREON IS SUBJECT TO ALL EASEMENTS AND RESTRICTIONS OF RECORD.
7. FOR WETLAND BUFFERS AND SETBACKS REFER TO BUCKWALTER P.U.D. AND ANNEXATION DOCUMENTS.

## REFERENCES

1. A PLAT OF PARCEL 6A, A PORTION OF BUCKWALTER COMMERCIAL, INC., PREPARED BY THOMAS & HUTTON ENGINEERING CO. DATED 7/7/05, REV. 8/22/05. PB 109 PG 186
2. A PLAT OF PARCEL 6B, A PORTION OF BHR ACQUISITION CO., LLC PROPERTY, PREPARED BY THOMAS & HUTTON ENGINEERING CO., DATED 7/1/05, REV 11/14/05, PB 109 PG 187

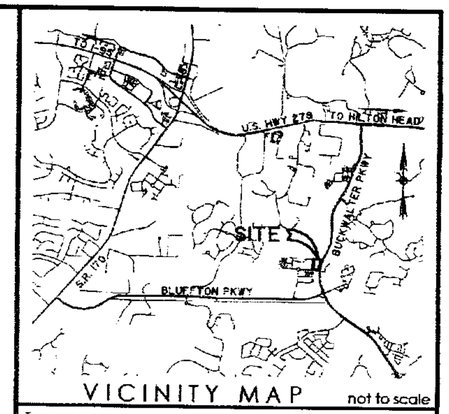


VICINITY MAP not to scale

This document and all reproducible copies of this document are the property of Thomas & Hutton. Reproduction of this document is not permitted without written consent of Thomas & Hutton unless this document becomes a matter of public record. ALTERATIONS TO THIS DOCUMENT ARE NOT PERMITTED.

SOUTH CAROLINA THOMAS & HUTTON ENGINEERING CO. No. C00265 CERTIFICATE OF AUTHORIZATION

SOUTH CAROLINA PROFESSIONAL LAND SURVEYOR No. 27743 12.12.11 STUART W. SPENCER

I HEREBY STATE THAT TO THE BEST OF MY PROFESSIONAL KNOWLEDGE, INFORMATION, AND BELIEF, THE SURVEY SHOWN HEREON WAS MADE IN ACCORDANCE WITH THE REQUIREMENTS OF THE STANDARDS OF PRACTICE MANUAL FOR SURVEYING IN SOUTH CAROLINA, AND MEETS OR EXCEEDS THE REQUIREMENTS FOR A CLASS "A" SURVEY AS SPECIFIED THEREIN.

STUART W. SPENCER
SOUTH CAROLINA PROFESSIONAL LAND SURVEYOR
LICENSE NO. 27743

A BOUNDARY SURVEY OF

# PARCEL B-1
## BEING A 1.85 ACRE PORTION OF THE LANDS OF PARCEL 6, LLC

TOWN OF BLUFFTON
BEAUFORT COUNTY, SOUTH CAROLINA

prepared for
PARCEL 6, LLC

| No | Revision | By | Date |
|---|---|---|---|

THOMAS & HUTTON
Engineering | Surveying | Planning | GIS | Consulting
50 Park of Commerce Way
PO Box 2727
Savannah, GA 31402-2727
p 912.234.5300 f 912.234.2950
www.thomasandhutton.com

60 0 60 120
1 INCH = 60 FEET

| plat | drawn | reviewed | field | crew |
|---|---|---|---|---|
| 12/12/11 | LPO | SWS | 12/08/11 | BL |

job 23300/20300 SHEET 1 OF 1

| LINE TABLE | | |
|---|---|---|
| LINE | BEARING | LENGTH |
| L1 | N 62°57'15" W | 30.80' |
| L2 | N 85°33'25" W | 151.78' |
| L3 | S 04°26'41" W | 202.47' |
| L4 | S 85°31'11" E | 142.47' |
| L5 | N 83°43'08" W | 73.05' |
| L6 | N 85°09'27" W | 66.00' |
| L7 | S 52°18'24" W | 43.11' |
| L8 | S 57°56'26" W | 64.80' |
| L9 | S 48°23'01" W | 64.52' |
| L10 | S 65°30'04" W | 80.12' |
| L11 | S 81°29'48" W | 44.28' |
| L12 | S 51°01'30" W | 77.27' |
| L13 | N 75°11'10" W | 76.12' |
| L14 | S 51°01'06" W | 42.81' |
| L15 | S 35°58'23" W | 57.87' |
| L16 | S 55°20'17" W | 35.78' |
| L17 | S 48°30'00" W | 45.13' |
| L18 | S 43°50'58" W | 49.18' |
| L19 | S 20°31'53" W | 42.61' |
| L20 | S 05°32'55" E | 31.07' |
| L21 | N 80°09'30" W | 38.12' |
| L22 | S 48°24'17" W | 39.65' |
| L23 | S 35°38'12" W | 49.52' |
| L24 | S 40°33'04" W | 55.08' |
| L25 | S 29°19'41" W | 49.13' |
| L26 | S 30°03'47" W | 59.90' |
| L27 | S 32°15'43" W | 59.39' |
| L28 | S 28°06'29" W | 45.87' |
| L29 | S 33°59'21" W | 47.87' |
| L30 | S 30°44'50" W | 47.54' |
| L31 | S 15°20'59" W | 50.57' |
| L32 | S 38°08'44" W | 51.44' |
| L33 | S 16°46'31" W | 53.42' |
| L34 | S 04°07'51" W | 33.30' |
| L35 | S 02°45'54" W | 50.27' |
| L36 | S 76°52'15" W | 40.92' |
| L37 | S 24°43'44" W | 35.41' |
| L38 | S 33°33'42" W | 47.35' |
| L39 | S 89°14'55" W | 232.14' |
| L40 | N 17°33'48" W | 212.96' |
| L41 | N 37°00'48" E | 171.48' |
| L42 | S 48°10'32" E | 85.65' |
| L43 | S 14°26'54" E | 65.09' |
| L44 | S 11°00'49" E | 61.35' |
| L45 | S 33°37'59" E | 66.60' |
| L46 | S 20°52'29" E | 45.71' |
| L47 | S 37°12'24" W | 68.92' |
| L48 | S 13°46'53" W | 98.30' |
| L49 | S 10°16'56" W | 39.72' |
| L50 | S 38°08'40" W | 38.34' |
| L51 | S 26°50'16" W | 33.36' |
| L52 | S 12°38'56" W | 56.95' |
| L53 | S 01°21'39" E | 40.04' |
| L54 | S 14°13'41" E | 58.18' |
| L55 | S 07°21'13" E | 46.26' |
| L56 | S 10°14'50" E | 59.19' |
| L57 | S 13°06'12" E | 46.83' |
| L58 | S 05°30'16" E | 57.79' |
| L59 | S 51°31'20" E | 43.22' |
| L60 | S 45°39'12" E | 58.96' |
| L61 | N 87°06'58" E | 42.01' |
| L62 | N 55°11'00" E | 82.63' |
| L63 | N 58°02'09" E | 67.97' |
| L64 | S 79°48'27" E | 43.53' |
| L65 | N 84°51'07" E | 66.05' |
| L66 | N 32°25'59" E | 64.60' |
| L67 | N 67°16'11" E | 41.26' |
| L68 | S 20°42'19" E | 83.98' |
| L69 | S 03°54'17" E | 75.86' |
| L70 | S 15°02'13" W | 98.89' |
| L71 | S 03°38'05" E | 68.56' |
| L72 | N 84°00'02" E | 54.79' |
| L73 | S 55°43'34" E | 119.51' |
| L74 | N 79°42'05" W | 51.18' |
| L75 | N 08°45'46" E | 30.86' |

| LINE TABLE | | |
|---|---|---|
| LINE | BEARING | LENGTH |
| L76 | S 27°40'01" W | 89.58' |
| L77 | S 27°40'01" W | 50.00' |
| L78 | S 27°40'01" W | 268.19' |
| L79 | S 85°31'11" E | 53.94' |
| L80 | N 04°34'29" E | 171.96' |
| L81 | N 04°34'29" E | 50.00' |
| L82 | S 87°53'44" W | 172.51' |
| L83 | N 44°35'47" W | 271.23' |
| L84 | N 25°07'44" E | 68.68' |
| L85 | S 87°53'44" W | 172.51' |
| L86 | N 44°35'47" W | 116.54' |
| L87 | N 74°25'48" W | 222.10' |
| L88 | N 62°24'30" W | 44.23' |
| L89 | N 62°24'30" W | 44.17' |
| L90 | N 74°25'48" W | 222.10' |
| L91 | N 44°35'47" W | 28.84' |
| L92 | S 04°29'33" W | 86.36' |
| L93 | S 04°29'33" W | 32.89' |
| L94 | S 85°25'31" E | 272.38' |
| L95 | S 85°25'31" E | 50.00' |
| L96 | N 04°34'29" E | 45.92' |
| L97 | S 85°25'31" E | 251.85' |
| L98 | N 85°25'31" W | 251.85' |
| L99 | N 04°34'29" E | 45.92' |
| L100 | S 85°25'31" E | 66.00' |
| L101 | N 04°28'49" E | 355.37' |
| L102 | N 85°31'11" W | 13.99' |
| L103 | S 04°30'13" W | 314.50' |
| L104 | N 05°45'44" E | 264.27' |
| L105 | S 04°22'59" W | 10.07' |
| L106 | N 45°34'23" W | 57.55' |
| L107 | N 85°25'31" W | 308.21' |
| L108 | N 04°34'29" E | 7.09' |
| L109 | S 85°13'19" E | 351.86' |
| L110 | S 85°25'13" E | 251.80' |
| L111 | S 04°34'29" W | 109.84' |
| L112 | N 85°25'31" W | 109.50' |
| L113 | S 04°34'29" W | 14.22' |
| L114 | N 85°25'31" W | 15.00' |
| L115 | N 04°34'29" E | 84.94' |
| L116 | S 85°25'31" E | 127.30' |
| L117 | N 04°34'29" E | 209.01' |
| L118 | N 04°34'29" E | 29.54' |
| L119 | N 04°34'29" E | 20.96' |

| CURVE TABLE | | | | | |
|---|---|---|---|---|---|
| CURVE | RADIUS | LENGTH | CH BEARING | CH LENGTH | DELTA |
| C1 | 1640.00' | 466.96' | S 19°30'36" W | 465.38' | 16°18'50" |
| C2 | 25.00' | 40.10' | S 50°19'56" W | 35.94' | 91°53'53" |
| C3 | 5055.00' | 155.27' | N 84°35'56" W | 155.26' | 1°45'36" |
| C4 | 110.00' | 172.72' | N 40°29'46" W | 155.51' | 89°57'49" |
| C5 | 550.00' | 52.20' | N 25°15'48" W | 52.18' | 5°26'17" |
| C6 | 1835.00' | 155.61' | S 25°14'15" W | 155.57' | 4°51'32" |
| C7 | 1885.00' | 170.94' | S 25°04'08" W | 170.88' | 5°11'45" |
| C8 | 1640.00' | 54.79' | N 12°18'37" E | 54.79' | 1°54'52" |
| C9 | 1640.00' | 412.16' | N 20°28'02" E | 411.08' | 14°23'58" |
| C10 | 313.00' | 368.30' | S 54°11'10" W | 347.42' | 67°25'07" |
| C11 | 313.00' | 259.53' | N 68°21'02" W | 252.16' | 47°30'29" |
| C12 | 165.00' | 85.91' | S 59°30'48" E | 84.95' | 29°50'01" |
| C13 | 263.00' | 311.59' | S 53°57'16" W | 293.69' | 67°52'54" |
| C14 | 263.00' | 218.07' | N 68°21'02" W | 211.88' | 47°30'29" |
| C15 | 30.00' | 46.61' | N 00°05'05" W | 42.06' | 89°01'24" |
| C16 | 122.00' | 84.86' | S 24°30'03" W | 83.16' | 39°51'08" |
| C17 | 175.00' | 36.72' | N 68°25'09" W | 36.65' | 12°01'18" |
| C18 | 125.00' | 26.23' | N 68°25'09" W | 26.18' | 12°01'18" |
| C19 | 215.00' | 111.95' | N 59°30'48" W | 110.69' | 29°50'01" |
| C20 | 40.00' | 51.18' | N 81°14'53" W | 47.76' | 73°18'12" |
| C21 | 40.00' | 40.16' | S 33°20'15" W | 38.49' | 57°31'32" |
| C22 | 86.00' | 135.09' | N 49°34'29" E | 121.62' | 90°00'00" |
| C23 | 136.00' | 14.27' | S 88°25'52" E | 14.26' | 6°00'43" |
| C24 | 136.00' | 199.36' | N 46°34'08" E | 181.98' | 83°59'17" |
| C25 | 4946.00' | 16.53' | S 04°28'44" W | 16.53' | 0°11'30" |

**ADJOINING PROPERTY**
**OWNER INFORMATION**

(A) N/F GEA STATESBORO, LLC PIN R610-022-000-1097-0000 DB 3211, PG 1278 PB 135, PAGE 170

(D) N/F EZAN, LLC PIN R610-029-000-1719-0000 DB 3107, PG 249 PB 133, PAGE 151

(F) N/F TOWN OF BLUFFTON PIN R620-030-000-1777-0000 DB 2979, PG 320 PB 108, PAGE 62

(G) N/F TOWN OF BLUFFTON PIN R610-022-000-1099-0000 PB 136, PAGE 106

(H) N/F TOWN OF BLUFFTON PIN R610-030-000-1649-0000 DB 3286, PG 1428 PB 108, PAGE 62

(I) N/F TOWN OF BLUFFTON PIN R610-030-000-1850-0000 PB 120, PAGE 78

(J) N/F PARCEL 6, LLC PIN R610-029-000-0787-0000 DB 2979, PG 323 PB 109, PAGE 187

(K) N/F PARKSIDE PROPERTY OWNERS ASSOCIATION PIN R614-029-000-0487-0000 DB 2682, PG 122 PB 103, PAGE 134

(L) N/F PARKSIDE PROPERTY OWNERS ASSOCIATION PIN R614-029-000-1143-0000 DB 2682, PG 122 PB 112, PAGE 148-150

(M) N/F 40 ISLAND WEST DRIVE, LLC PIN R600-021-000-019B-0000 DB 3077, PG 737 PB 39, PAGE 193

(N) N/F ISLAND WEST ASSOCIATES PIN R600-021-000-0070-0000 DB 1128, PG 192 PB 60, PAGE 165

(O) N/F 40 ISLAND WEST DRIVE, LLC PIN R600-021-000-019B-0000 DB 3077, PG 737 PB 39, PAGE 193

(P) N/F FIRST SOUTH BANK PIN R614-022-000-0894-0000 DB 2928, PG 2008 PB 98, PAGE 89

GRID NORTH (NAD83) SOUTH CAROLINA SPC

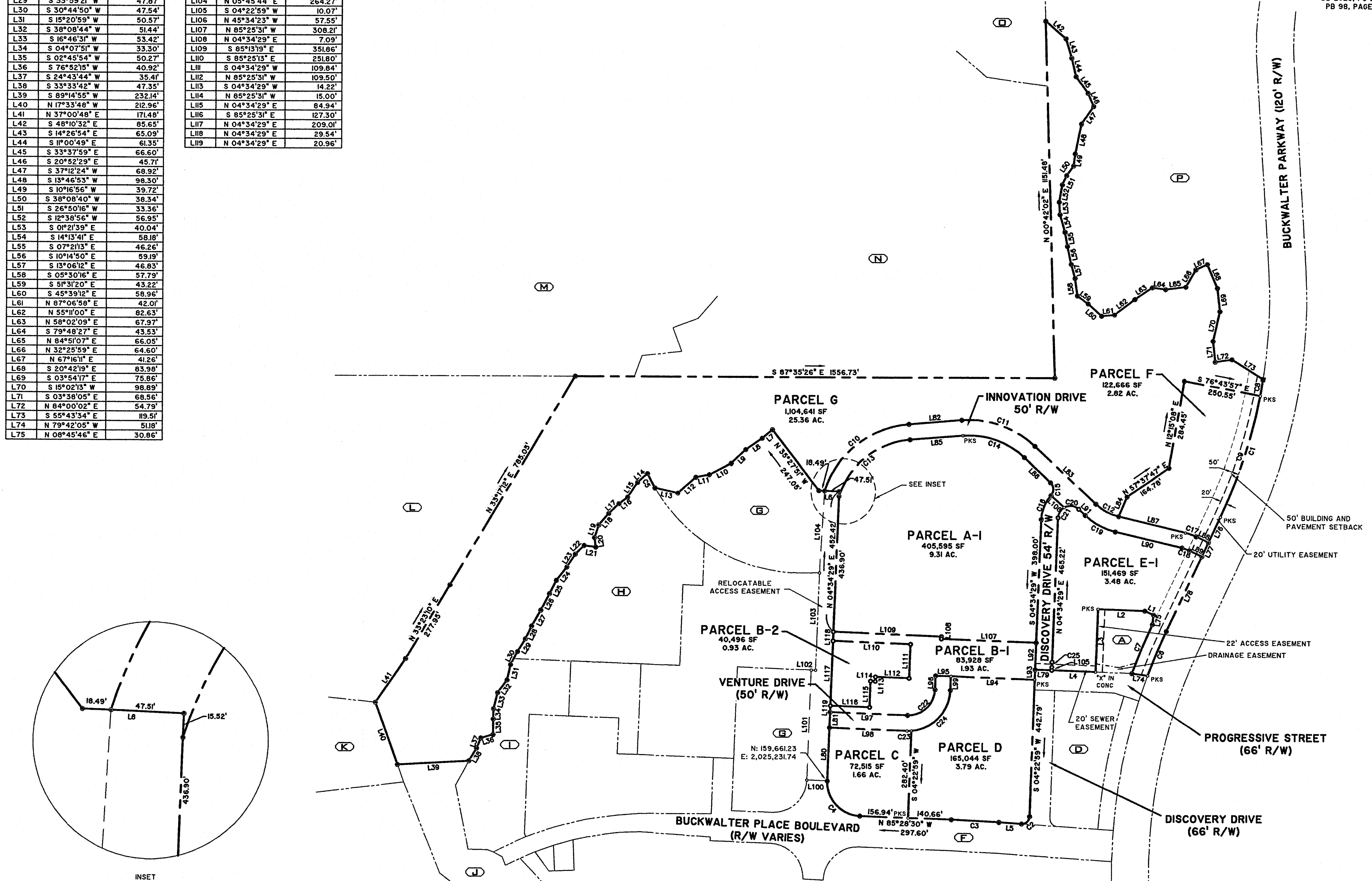


INSET
N.T.S.

Town of Bluffton
JUN 18 2019
Planning & Growth Mgmt

TOWN OF BLUFFTON
APPROVED

## LEGEND

- ° MEANDER POINT (NO MONUMENT)
- ■ CONCRETE MONUMENT (FOUND)
- ⊡ CONCRETE MONUMENT (SET)
- ● IRON PIPE (FOUND)
- ○ IRON PIPE (SET)
- ● IRON REBAR (FOUND)
- ○ IRON REBAR (SET)

PKS PK NAIL SET

## NOTES

1. TAX MAP NO. (PARENT TRACT): R610-022-000-0579-0000.
2. ACCORDING TO F.I.R.M. MAP NO. 450025, PANEL 085D, 055D & 080D, REVISED SEPTEMBER 29, 1986, THE PROPERTY SHOWN ON THIS PLAT IS LOCATED IN ZONE C, OUTSIDE THE 100 YEAR FLOOD HAZARD AREA.
3. COORDINATES AND DIRECTIONS SHOWN ON THIS SURVEY ARE BASED ON SOUTH CAROLINA STATE PLANE COORDINATE SYSTEM (NAD83). DISTANCES SHOWN ARE GROUND DISTANCES, NOT GRID DISTANCES.
4. THIS SURVEY IS VALID ONLY IF THE PRINT OF SAME HAS THE ORIGINAL SIGNATURE AND EMBOSSED SEAL OF THE LAND SURVEYOR.
5. A TITLE SEARCH WAS NOT PERFORMED BY THOMAS & HUTTON ENGINEERING CO. AT THE TIME OF THIS SURVEY.
6. THE PROPERTY PLATTED HEREON IS SUBJECT TO ALL EASEMENTS AND RESTRICTIONS OF RECORD.
7. DEED REFERENCE: DEED BOOK 2317, PAGE 822.
8. THE POSITION OF UNDERGROUND UTILITIES SHOWN ON THIS DRAWING IS BASED UPON THE LOCATION OF SURFACE APPURTENANCES AND/OR SURFACE MARKINGS AND SHOULD BE CONSIDERED APPROXIMATE.
9. THIS PLAT REPLACES PLAT RECORDED IN PB 146, PAGE 97.

## REFERENCES


1. A BOUNDARY PLAT OF PARCEL 6A, A PORTION OF BUCKWALTER COMMERCIAL, INC., PREPARED FOR BUCKWALTER COMMERCIAL, INC., BY THOMAS & HUTTON ENGINEERING CO., DATED JULY 1, 2005, RECORDED IN PLAT BOOK 109, PAGE 186, BEAUFORT COUNTY RECORDS.
2. A ALTA/ACSM LAND TITLE SURVEY OF 7.12 ACRES, A PORTION OF PARCEL 6A & PARCEL 6B, A SECTION OF BUCKWALTER PLACE, PREPARED FOR THE TOWN OF BLUFFTON, BY SC SURVEYING CONSULTANTS, DATED MARCH 13, 2013, RECORDED IN PLAT BOOK 136, PAGE 106, BEAUFORT COUNTY RECORDS.
3. A SUBDIVISION PLAT OF 23.04 ACRES, BUCKWALTER PARKWAY (BLUFFTON TECH PARK), PREPARED FOR THE TOWN OF BLUFFTON, BY WARD EDWARDS, INC., DATED MAY 30, 2007, RECORDED IN PLAT BOOK 120, PAGE 78, BEAUFORT COUNTY RECORDS.
4. A BOUNDARY SURVEY OF PARCEL B-1, BEING A 1.85 ACRE PORTION OF THE LANDS OF PARCEL 6, LLC, PREPARED FOR PARCEL 6, LLC, BY THOMAS & HUTTON ENGINEERING CO., DATED DECEMBER 12, 2011, RECORDED IN PLAT BOOK 133, PAGE 151, BEAUFORT COUNTY RECORDS.
5. A BOUNDARY SURVEY OF PARCEL B-2 & A 50' DRAINAGE RIGHT OF WAY, BEING A PORTION OF THE LANDS OF PARCEL 6, LLC, PREPARED FOR GEA STATESBORO, LLC, BY THOMAS & HUTTON ENGINEERING CO., DATED SEPTEMBER 12, 2012, RECORDED IN PLAT BOOK 135, PAGE 170, BEAUFORT COUNTY RECORDS.
6. SUBDIVISION OF THE LANDS OF PARCEL 6, LLC, PREPARED BY THOMAS & HUTTON, DATED 3-15-17, RECORDED IN PB 146, PAGE 97.


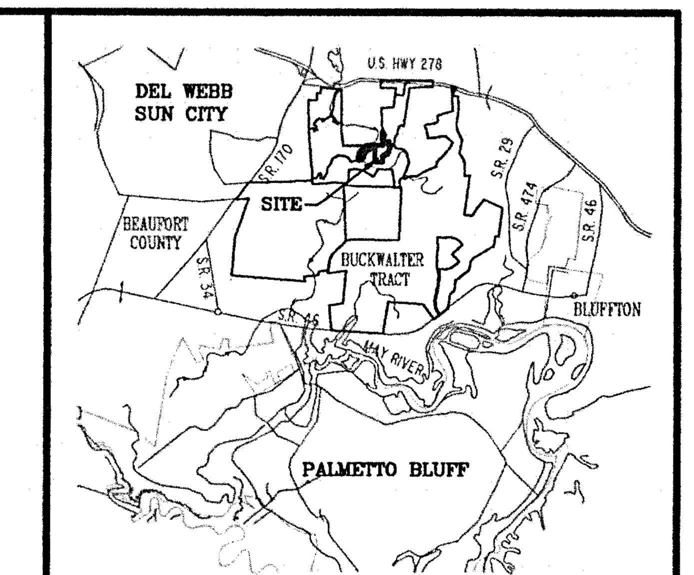


VICINITY MAP not to scale

This document and all reproducible copies of this document are the property of Thomas & Hutton. Reproduction of this document is not permitted without written consent of Thomas & Hutton unless this document becomes a matter of public record. ALTERATIONS TO THIS DOCUMENT ARE NOT PERMITTED.

| ACREAGE SCHEDULE | |
|---|---|
| PARCEL A-1 | 9.31 AC. |
| PARCEL B-1 | 1.93 AC. |
| PARCEL B-2 | 0.93 AC. |
| PARCEL C | 1.66 AC. |
| PARCEL D | 3.79 AC. |
| PARCEL E-1 | 3.48 AC. |
| PARCEL F | 2.82 AC. |
| PARCEL G | 25.36 AC. |
| VENTURE DRIVE | 0.54 AC. |
| DISCOVERY DRIVE | 0.68 AC. |
| INNOVATION DRIVE | 1.67 AC. |
| TOTAL | 52.17 AC. |

SOUTH CAROLINA THOMAS & HUTTON ENGINEERING CO. No. C00285 CERTIFICATE OF AUTHORIZATION

SOUTH CAROLINA PROFESSIONAL LAND SURVEYOR No. 26957 ROBERT K. MORGAN, III 6/6/19

I HEREBY STATE THAT TO THE BEST OF MY PROFESSIONAL KNOWLEDGE, INFORMATION, AND BELIEF, THE SURVEY SHOWN HEREON WAS MADE IN ACCORDANCE WITH THE REQUIREMENTS OF THE STANDARDS OF PRACTICE MANUAL FOR SURVEYING IN SOUTH CAROLINA, AND MEETS OR EXCEEDS THE REQUIREMENTS FOR A CLASS "A" SURVEY AS SPECIFIED THEREIN.

ROBERT K. MORGAN, III
SOUTH CAROLINA PROFESSIONAL LAND SURVEYOR
LICENSE NO. 26957

SUBDIVISION OF

# THE LANDS OF PARCEL 6, LLC

BLUFFTON TOWNSHIP
BEAUFORT COUNTY, SOUTH CAROLINA

prepared for
BC BUCKWALTER, LLC

06/25/2019 10:48:29 AM
REC'D BY pbaxley RCPT# 936471
RECORDING FEES $10.00

BEAUFORT COUNTY SC - ROD
BK 152 Pg 32
FILE NUM 2019033291

| No. | Revision | By | Date |
|---|---|---|---|
| 1 | PARCELS A, B, E AND DISCOVERY DRIVE | LPO | 6-4-19 |

THOMAS & HUTTON
Engineering | Surveying | Planning | GIS | Consulting

50 Park of Commerce Way
Savannah, GA 31405 • 912.234.5300

www.thomasandhutton.com

200 0 200 400
1 INCH = 200 FEET

| plat | drawn | reviewed | field | crew |
|---|---|---|---|---|
| 03-15-17 | LPO | RKM | MARCH,2017 | BL |

job 25125.0004 SHEET 1 OF 1