IF THIS STAMP IS NOT RED
© COOK DESIGN STUDIO, INC.
REPRODUCTION OF THESE PLANS BY ANY MEANS IS PROHIBITED BY FEDERAL LAW.
DO NOT COPY
VIOLATIONS ARE PUNISHABLE BY FINES UP TO $100,000 PER OFFENSE. IF THIS STAMP IS NOT RED, THEN IT IS ILLEGAL. CALL CDS, INC. AT 843-782-4077 TO OBTAIN LEGAL COPIES OF THIS PLAN.
IT IS AN ILLEGAL SET OF PLANS

New Construction For:
Dylan & Amanda Mingard
41 Stock Farm Road
Bluffton, SC 29910

VICINITY MAP

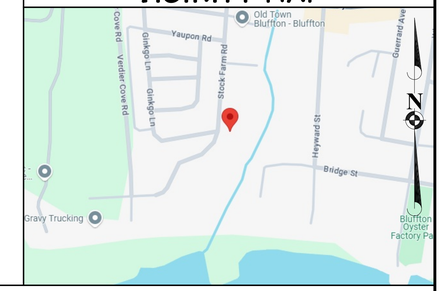

THIS PLAN IS THE PROPERTY OF COOK DESIGN STUDIO, INC. THE PURCHASER OF THIS PLAN IS GRANTED THE RIGHT TO CONSTRUCT A TOTAL OF ONLY ONE PROJECT FROM THIS PLAN. IT IS UNLAWFUL TO REPRODUCE ANY PART OF THIS PLAN EITHER ON PAPER OR ON SITE, WITHOUT THE WRITTEN CONSENT FROM THE DESIGNER. CONSTRUCTION OF THIS PLAN IS TO BE IN CONFORMATION WITH ALL LOCAL ORDINANCES AND BLDG. CODES APPLICABLE. CONTRACTOR AND SUB-CONTRACTORS SHOULD CHECK ALL DRAWINGS PRIOR TO CONSTRUCTION.

CONCEPTUAL RENDERING
N.T.S.

SHEET INDEX:

ID	NAME
G001	COVER PAGE
C001	SITE PLAN
A101	FLOOR PLAN, SCHEDULES, & DETAILS
A201	FRONT & REAR ELEVATIONS
A202	LEFT & RIGHT ELEVATIONS
A301	3D EXTERIOR RENDERINGS
E101	ELECTRICAL PLAN
S101	FOUNDATION PLAN
S102	ROOF PLAN
S103	STRUCTURAL DETAILS
S104	STRUCTURAL DETAILS
S105	STRUCTURAL DETAILS

GENERAL NOTES

1. ALL WORK SHALL COMPLY WITH FEDERAL, STATE, AND LOCAL BUILDING CODES AND REGULATIONS.
2. MECHANICAL, ELECTRICAL, AND PLUMBING WORK REQUIRED ON THIS PERMIT APPLICATION TO BE PERFORMED BY SUBCONTRACTORS LICENSED IN THE STATE AND MUNICIPALITY IN WHICH WORK IS BEING PERFORMED.
3. SUBCONTRACTORS SHALL PROVIDE CERTIFICATION OF GENERAL LIABILITY INSURANCE AND WORKMAN'S COMPENSATIONS COVERAGE, AS REQUIRED BY THE GENERAL CONTRACTOR.
4. THE CONTRACTOR SHALL COORDINATE AND/OR OBTAIN ALL BUILDING PERMITS REQUIRED FOR CONSTRUCTION AND CERTIFICATES OF OCCUPANCY.
5. THE CONTRACTOR SHALL BE SOLELY RESPONSIBLE FOR ALL CONSTRUCTION MEANS, METHODS, TECHNIQUES, AND PROCEDURES.
6. THE CONTRACTOR SHALL BE RESPONSIBLE FOR ASPECTS OF SAFETY DURING CONSTRUCTION AND SHALL PROVIDE ADEQUATE SHORING AND BRACING TO ENSURE SUCH SAFETY.
7. ALL DIMENSIONS AND SITE CONDITIONS TO BE FIELD VERIFIED AND SHALL BE THE RESPONSIBILITY OF THE CONTRACTOR. NOTIFY THE DESIGNER OF ANY DISCREPANCY PRIOR TO COMMENCEMENT OF WORK.
8. IT SHALL BE THE RESPONSIBILITY OF THE CONTRACTOR TO LOCATE ALL EXISTING UTILITIES WHETHER INDICATED ON PLANS OR NOT, AND TO PROTECT THEM FROM DAMAGE.
9. ALL DETAILS, SECTIONS, NOTES, OR REFERENCES TO OTHER DRAWINGS ARE INTENDED TO BE TYPICAL.
10. DURING CONSTRUCTION, AND PRIOR TO THE INCORPORATION OF ANY CHANGES, REVISIONS, MODIFICATIONS OR DEVIATIONS FROM THE CONSTRUCTION DOCUMENTS, THE CONTRACTOR SHALL NOTIFY THE DESIGNER AND OBTAIN APPROVAL FROM THE GOVERNING BUILDING OFFICIAL BEFORE PROCEEDING WITH THE WORK.
11 THE MANUFACTURERS, PRODUCTS AND EQUIPMENT LISTED ESTABLISH PERFORMANCE REQUIREMENTS. SUBSTITUTIONS OF EQUAL PERFORMANCE MAY BE SUBMITTED TO THE DESIGNER FOR APPROVAL.
12. ALL MATERIALS SHALL BE INSTALLED PER MANUFACTURER'S INSTRUCTIONS, SPECIFICATIONS, AND WARRANTY REQUIREMENTS UNLESS OTHERWISE SPECIFIED BY THE DESIGNER.
13. SPECIFIC NOTES AND DETAILS ON DRAWINGS SHALL TAKE PRECEDENCE OVER GENERAL NOTES AND TYPICAL DETAILS. WHERE NO DETAILS ARE SHOWN, CONSTRUCTION SHALL CONFORM TO SIMILAR WORK ON THE PROJECT.
14. ALL WORK SHALL BE EXECUTED IN A SKILLED MANNER WITH REGARD TO CUTS, JOINTS, PLACEMENT OF FASTENERS, PLUMBNESS, LEVELNESS, ALIGNMENT, PREPARATION, AND FINISH.
15. IT SHALL BE THE RESPONSIBILITY OF THE CONTRACTOR TO VERIFY THE COMPATIBILITY OF ALL MATERIALS AND PRODUCTS PRIOR TO INSTALLATION.
16. DRAWINGS ARE NOT INTENDED TO BE SCALED.

CODES - REGULATIONS - STANDARDS

1. THE GENERAL CONTRACTOR IS RESPONSIBLE FOR ENSURING BUILT COMPLIANCE WITH ALL CODES, REGULATIONS, AND STANDARDS SUCH AS MAY BE IN FORCE. THESE CODES INCLUDE BUT MAY NOT BE LIMITED TO:

   2021 International Residential Code With SC Modifications

2. SHOULD THE GENERAL CONTRACTOR BECOME AWARE OF A CONDITION SHOWN OR DEPICTED IN THE CONTRACT DOCUMENTS THAT WOULD RESULT IN A VIOLATION OF ANY CODE OR REGULATION LISTED ABOVE, THE GENERAL CONTRACTOR SHALL CONTACT THE HOMEOWNER IMMEDIATELY FOR RESOLUTION.
3. THE GENERAL CONTRACTOR SHALL BE RESPONSIBLE FOR OBTAINING ANY PERMIT NOT PROVIDED BEFOREHAND BY THE HOMEOWNER.
4. THE GENERAL CONTRACTOR AND/OR HIS/HER SUBCONTRACTORS SHALL BE RESPONSIBLE FOR COORDINATING ALL REQUIRED INSPECTIONS.
5. NEITHER THE HOMEOWNER NOR THE DESIGNER SHALL BE CONSIDERED TO ACT IN THE ROLE OF AN INSPECTOR. WHILE THE HOMEOWNER AND THE DESIGNER SHALL ENDEAVOR TO ALERT THE GENERAL CONTRACTOR TO ANY PERCEIVED OR OBSERVED DEFECT IN THE CONSTRUCTION, FAILURE TO DO SO SHALL NOT IN ANY WAY RELIEVE THE GENERAL CONTRACTOR FROM HIS/HER OBLIGATION TO ENSURE THAT THE BUILT WORK IS SAFE, OF GOOD QUALITY, AND COMPLIANT WITH ALL RELEVANT CODES AND REGULATIONS.
6. THE GENERAL CONTRACTOR IS RESPONSIBLE FOR ENSURING THAT ALL WORK, WHETHER PERFORMED BY SUBCONTRACTORS OR BY THE GENERAL CONTRACTOR HIM/HERSELF, IS OF GOOD WORKMANSHIP AND QUALITY.

SQUARE FOOTAGE

1ST FLOOR = N/A
2ND FLOOR = N/A
TOTAL HEATED = N/A

STORAGE = 264
CARPORT = 528
BREEZEWAY = 299
GARAGE = N/A

TOTAL AREA =1091

DESIGN CRITERIA

DESIGN CODE: ICC 600 & IRC 2021 WITH SC MODIFICATIONS & ASCE7-16
SCOPE OF WORK: NEW CONSTRUCTION
OCCUPANCY GROUP: SINGLE-FAMILY DWELLING
CONSTRUCTION TYPE: VB
FIRE PROTECTION SYSTEMS: NO
TOTAL AREA: 1091 SQ. FT.
HEIGHT: 20'-3 7/16" +/-
NUMBER OF STORIES: 1
FLOOD ZONE: X

1. FLOOR DEAD LOADS:
   - PARTITIONS 20 PSF
   - FIXED EQUIPMENT ACTUAL WEIGHT
   - FINISHES ACTUAL WEIGHT
2. FLOOR LIVE LOADS:
   - LIVING ROOMS 40 PSF
   - SLEEPING ROOMS 40 PSF
   - ATTIC W/ STORAGE 20 PSF
   - ATTIC W/O STORAGE 10 PSF
   - DECKS 40 PSF
   - BALCONIES 60 PSF
   - GUARDRAILS & HANDRAILS 200#
3. ROOF DEAD LOAD: TOTAL 15.0 PSF
   - ROOFING 2.0 PSF
   - DECKING 2.0 PSF
   - INSULATION 1.0 PSF
   - FRAMING 5.0 PSF
   - CEILING 5.0 PSF
4. ROOF LIVE LOADS: 20 PSF
5. ROOF SNOW LOAD: 5.0 PSF GROUND
6. WIND EXPOSURE: B
7. BASIC WIND SPEED: 140
8. SEISMIC CRITERIA
   - SITE CLASS: D
   - DESIGN CATEGORY: C
9. THE DESIGN SOIL BEARING PRESSURE IS PSF 2000 (ASSUMED)

WINDOW AND DOOR DESIGN PRESSURE RATINGS PER 2021 INTERNATIONAL RESIDENTIAL CODE. DESIGN PRESSURE VALUES LISTED IN THE TABLE ARE IN POUNDS PER SQUARE FOOT (PSF)
BASIC WIND SPEED: 140 MPH

MEAN ROOF HEIGHT (MRH) — INLAND LOCATION (EXPOSURE "B")

(MRH)	ZONE (4)	ZONE (5)
15'	DP 35	DP 45
20'	DP 35	DP 45
25'	DP 35	DP 45
30'	DP 35	DP 45
35'	DP 35	DP 45
40'	DP 40	DP 45
45'	DP 40	DP 50
50'	DP 40	DP 50

MEAN ROOF HEIGHT (MRH) — OCEAN/MARSH LOCATION (EXPOSURE "C")

(MRH)	ZONE (4)	ZONE (5)
15'	DP 40	DP 50
20'	DP 45	DP 50
25'	DP 45	DP 50
30'	DP 50	DP 55
35'	DP 50	DP 55
40'	DP 50	DP 65
45'	DP 55	DP 65
50'	DP 55	DP 65

SOUTH CAROLINA REGISTERED PROFESSIONAL ENGINEER
No.16901
04-30-2025
WILLIAM H. BRANHAM III

WILLIAM H. BRANHAM III, P.E.
PO BOX 147
MT. PLEASANT, SC 29465
(843) 830-0418

The certification contained herein is for the structural design elements only.

NO.	DATE	REVISIONS
1		

PREPARED FOR:
Dylan & Amanda Mingard
41 Stock Farm Road
Bluffton, SC 29910

MEMBER AIBD AMERICAN INSTITUTE of BUILDING DESIGN

N·C·B·D·C NATIONAL COUNCIL OF BUILDING DESIGN CERTIFICATORS
By Scott Cook
Scott Cook
CERTIFICATION NO. 41-117

SEAL DATE: 04-30-2025

COOK DESIGN STUDIO, Inc.
804 WIGHMAN STREET
WALTERBORO, SC 29488
(843) 782-4077

DRAWN BY:	BSC
CHECK BY:	WHB
JOB:	6858-177-2025
DATE:	04-30-2025

G001

IF THIS STAMP IS NOT RED
© COOK DESIGN STUDIO, INC.
REPRODUCTION OF THESE PLANS BY ANY MEANS IS PROHIBITED BY FEDERAL LAW
DO NOT COPY
VIOLATIONS ARE PUNISHABLE BY FINES UP TO $100,000 PER OFFENSE. IF THIS STAMP IS NOT RED, THEN IT IS ILLEGAL. CALL COD, INC AT 843-782-4077 TO OBTAIN LEGAL COPIES OF THIS PLAN.
IT IS AN ILLEGAL SET OF PLANS

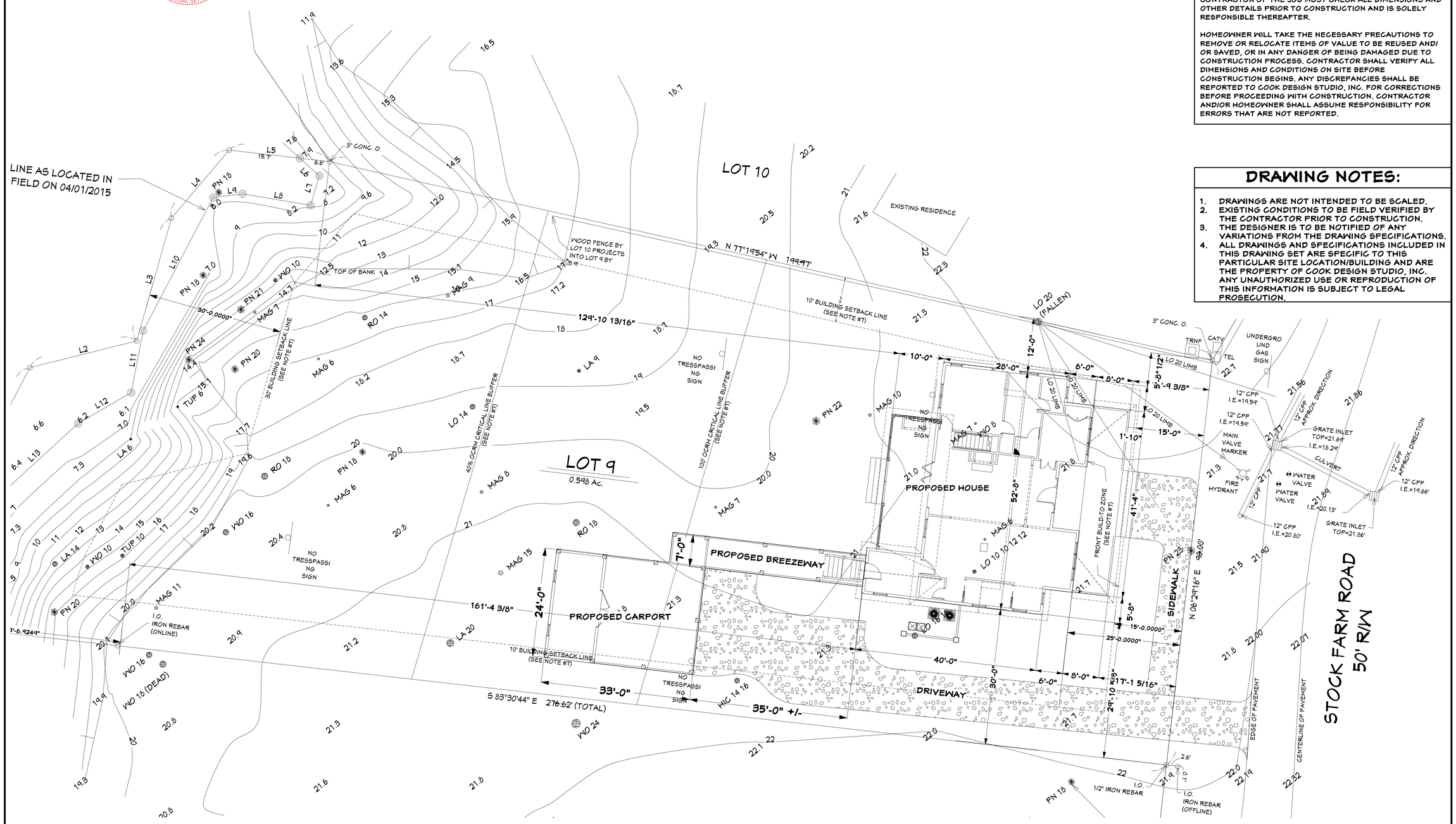

THIS SITE PLAN IS NOT AN OFFICIAL SURVEY OF THE PARCELS REPRESENTED HEREIN; IT IS INTENDED TO BE USED FOR LAYOUT PURPOSES ONLY.

SITE PLAN

SCALE: 1"=10'

TO THE BEST OF MY KNOWLEDGE THESE PLANS ARE DRAWN TO COMPLY WITH THE HOMEOWNER'S AND/OR BUILDER'S SPECIFICATIONS AND ANY CHANGES MADE TO THEM AFTER PRINTS ARE MADE WILL BE DONE AT THE HOMEOWNER'S AND/OR BUILDER'S EXPENSE AND RESPONSIBILITY. THE CONTRACTOR SHALL VERIFY ALL DIMENSIONS AND ENCLOSED DRAWINGS PRIOR TO CONSTRUCTION. COOK DESIGN STUDIO, INC. IS NOT LIABLE FOR ERRORS ONCE CONSTRUCTION HAS BEGUN. WHILE EVERY EFFORT HAS BEEN MADE IN THE PREPARATION OF THIS PLAN TO AVOID MISTAKES, THE MAKER CAN NOT GUARANTEE AGAINST HUMAN ERROR. THE CONTRACTOR OF THE JOB MUST CHECK ALL DIMENSIONS AND OTHER DETAILS PRIOR TO CONSTRUCTION AND IS SOLELY RESPONSIBLE THEREAFTER.

HOMEOWNER WILL TAKE THE NECESSARY PRECAUTIONS TO REMOVE OR RELOCATE ITEMS OF VALUE TO BE REUSED AND/OR SAVED, OR IN ANY DANGER OF BEING DAMAGED DUE TO CONSTRUCTION PROCESS. CONTRACTOR SHALL VERIFY ALL DIMENSIONS AND CONDITIONS ON SITE BEFORE CONSTRUCTION BEGINS. ANY DISCREPANCIES SHALL BE REPORTED TO COOK DESIGN STUDIO, INC. FOR CORRECTIONS BEFORE PROCEEDING WITH CONSTRUCTION. CONTRACTOR AND/OR HOMEOWNER SHALL ASSUME RESPONSIBILITY FOR ERRORS THAT ARE NOT REPORTED.

DRAWING NOTES:

1. DRAWINGS ARE NOT INTENDED TO BE SCALED.
2. EXISTING CONDITIONS TO BE FIELD VERIFIED BY THE CONTRACTOR PRIOR TO CONSTRUCTION.
3. THE DESIGNER IS TO BE NOTIFIED OF ANY VARIATIONS FROM THE DRAWING SPECIFICATIONS.
4. ALL DRAWINGS AND SPECIFICATIONS INCLUDED IN THIS DRAWING SET ARE SPECIFIC TO THIS PARTICULAR SITE LOCATION/BUILDING AND ARE THE PROPERTY OF COOK DESIGN STUDIO, INC. ANY UNAUTHORIZED USE OR REPRODUCTION OF THIS INFORMATION IS SUBJECT TO LEGAL PROSECUTION.

THIS PLAN IS THE PROPERTY OF COOK DESIGN STUDIO, INC. THE PURCHASER OF THIS PLAN IS GRANTED THE RIGHT TO CONSTRUCT A TOTAL OF ONLY ONE PROJECT FROM THIS PLAN. IT IS UNLAWFUL TO REPRODUCE ANY PART OF THIS PLAN EITHER ON PAPER OR ON SITE, WITHOUT THE WRITTEN CONSENT FROM THE DESIGNER. CONSTRUCTION OF THIS PLAN IS TO BE IN CONFORMATION WITH ALL LOCAL ORDINANCES AND BLDG. CODES APPLICABLE. CONTRACTOR AND SUB-CONTRACTORS SHOULD CHECK ALL DRAWINGS PRIOR TO CONSTRUCTION.

NO.	DATE	REVISIONS
-		

PREPARED FOR:

Dylan & Amanda Mingard
41 Stock Farm Road
Bluffton, SC 29910

MEMBER AIBD AMERICAN INSTITUTE of BUILDING DESIGN

N·C·B·D·C NATIONAL COUNCIL OF BUILDING DESIGNER CERTIFICATIONS
Scott Cook
CERTIFICATION NO. 41-117

SEAL DATE: 04-30-2025

COOK DESIGN STUDIO, Inc.
804 WIGHMAN STREET
WALTERBORO, SC 29488
(843) 782-4077

DRAWN BY:	BSC
CHECK BY:	WHB
JOB:	6858-177-2025
DATE:	04-30-2025

C001

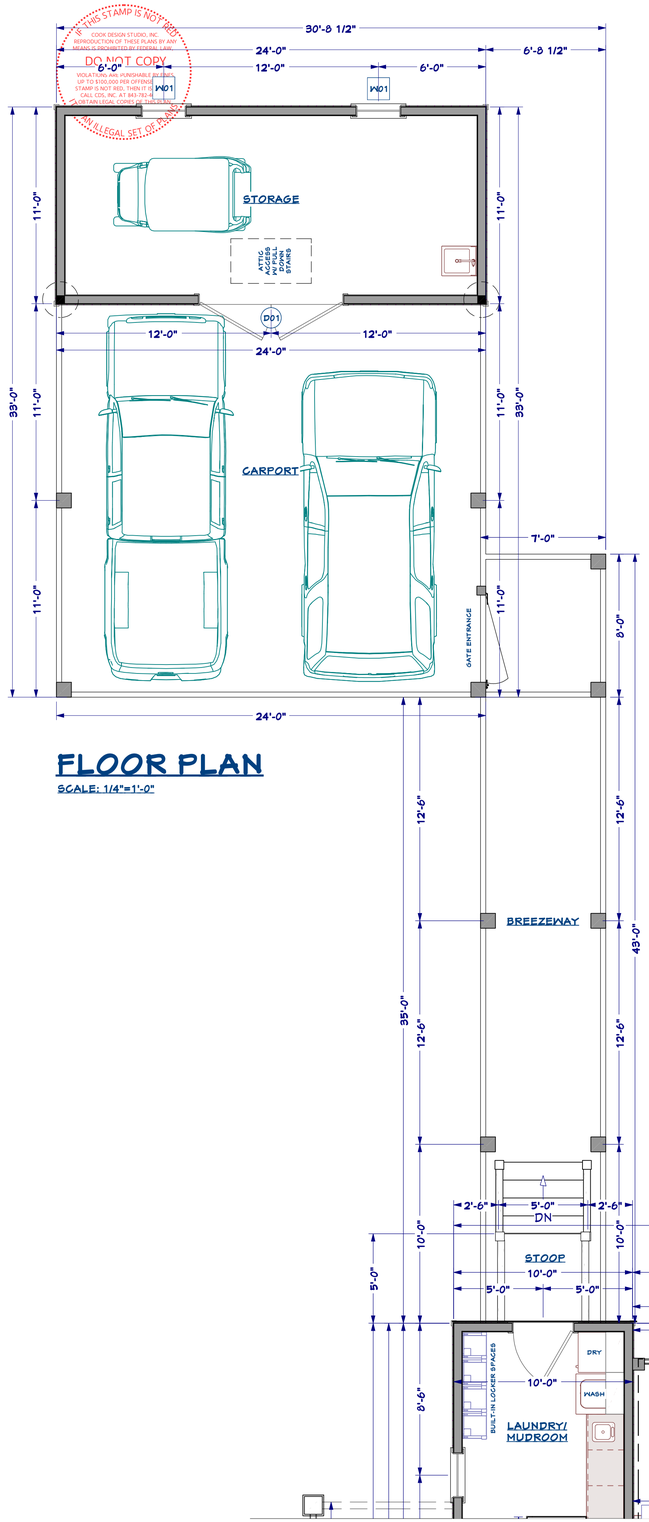

FLOOR PLAN

SCALE: 1/4"=1'-0"

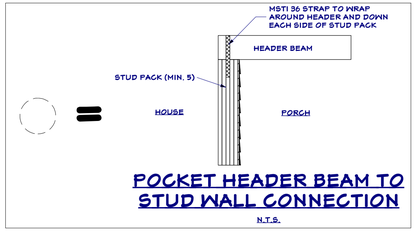

POCKET HEADER BEAM TO STUD WALL CONNECTION

N.T.S.

Door Schedule

Number	Size	Width	Height	Floor	Tempered	Description	Manufacturer	Comments	Qty
D01	8068 L/R EX	96"	80"	1		Ext. Double Hinged-Slab			1

Window Schedule

Number	Size	Width	Height	Tempered	Description	Manufacturer	Comments	Qty
W01	2646DH	30"	54"		Double Hung			2

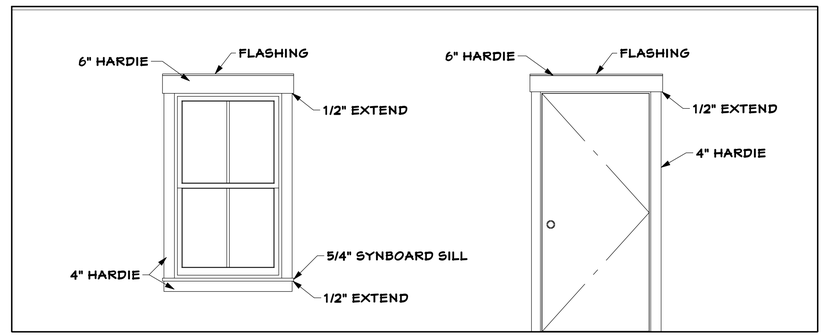

WINDOW & DOOR FRAMING DETAIL

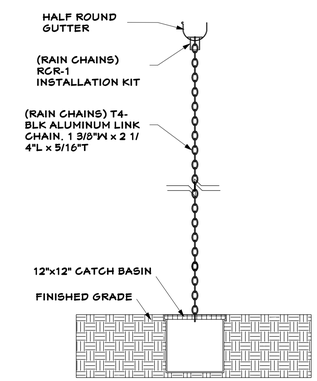

RAIN CHAIN DETAIL

TO THE BEST OF MY KNOWLEDGE THESE PLANS ARE DRAWN TO COMPLY WITH THE HOMEOWNER'S AND/OR BUILDER'S SPECIFICATIONS AND ANY CHANGES MADE TO THEM AFTER PRINTS ARE MADE WILL BE DONE AT THE HOMEOWNER'S AND/OR BUILDER'S EXPENSE AND RESPONSIBILITY. THE CONTRACTOR SHALL VERIFY ALL DIMENSIONS AND ENCLOSED DRAWINGS PRIOR TO CONSTRUCTION. COOK DESIGN STUDIO, INC. IS NOT LIABLE FOR ERRORS ONCE CONSTRUCTION HAS BEGUN. WHILE EVERY EFFORT HAS BEEN MADE IN THE PREPARATION OF THIS PLAN TO AVOID MISTAKES, THE MAKER CAN NOT GUARANTEE AGAINST HUMAN ERROR. THE CONTRACTOR OF THE JOB MUST CHECK ALL DIMENSIONS AND OTHER DETAILS PRIOR TO CONSTRUCTION AND IS SOLELY RESPONSIBLE THEREAFTER.

HOMEOWNER WILL TAKE THE NECESSARY PRECAUTIONS TO REMOVE OR RELOCATE ITEMS OF VALUE TO BE REUSED AND/OR SAVED, OR IN ANY DANGER OF BEING DAMAGED DUE TO CONSTRUCTION PROCESS. CONTRACTOR SHALL VERIFY ALL DIMENSIONS AND CONDITIONS ON SITE BEFORE CONSTRUCTION BEGINS. ANY DISCREPANCIES SHALL BE REPORTED TO COOK DESIGN STUDIO, INC. FOR CORRECTIONS BEFORE PROCEEDING WITH CONSTRUCTION. CONTRACTOR AND/OR HOMEOWNER SHALL ASSUME RESPONSIBILITY FOR ERRORS THAT ARE NOT REPORTED.

DRAWING NOTES:

1. DRAWINGS ARE NOT INTENDED TO BE SCALED.
2. EXISTING CONDITIONS TO BE FIELD VERIFIED BY THE CONTRACTOR PRIOR TO CONSTRUCTION.
3. THE DESIGNER IS TO BE NOTIFIED OF ANY VARIATIONS FROM THE DRAWING SPECIFICATIONS.
4. ALL DRAWINGS AND SPECIFICATIONS INCLUDED IN THIS DRAWING SET ARE SPECIFIC TO THIS PARTICULAR SITE LOCATION/BUILDING AND ARE THE PROPERTY OF COOK DESIGN STUDIO, INC. ANY UNAUTHORIZED USE OR REPRODUCTION OF THIS INFORMATION IS SUBJECT TO LEGAL PROSECUTION.

THIS PLAN IS THE PROPERTY OF COOK DESIGN STUDIO, INC. THE PURCHASER OF THIS PLAN IS GRANTED THE RIGHT TO CONSTRUCT A TOTAL OF ONLY ONE PROJECT FROM THIS PLAN. IT IS UNLAWFUL TO REPRODUCE ANY PART OF THIS PLAN EITHER ON PAPER OR ON SITE, WITHOUT THE WRITTEN CONSENT FROM THE DESIGNER. CONSTRUCTION OF THIS PLAN IS TO BE IN CONFORMATION WITH ALL LOCAL ORDINANCES AND BLDG. CODES APPLICABLE. CONTRACTOR AND SUB-CONTRACTORS SHOULD CHECK ALL DRAWINGS PRIOR TO CONSTRUCTION.

NO.	DATE	REVISIONS
-		

PREPARED FOR:

Dylan & Amanda Mingard
41 Stock Farm Road
Bluffton, SC 29910

MEMBER AIBD AMERICAN INSTITUTE of BUILDING DESIGN

N·C·B·D·C NATIONAL COUNCIL OF BUILDING DESIGNER CERTIFICATIONS
Scott Cook
CERTIFICATION NO. 41-117

SEAL DATE: 04-30-2025

COOK DESIGN STUDIO, Inc.
804 WIGHMAN STREET
WALTERBORO, SC 29488
(843) 782-4077

DRAWN BY:	BSC
CHECK BY:	WHB
JOB:	6858-177-2025
DATE:	04-30-2025

A101

IF THIS STAMP IS NOT RED
COOK DESIGN STUDIO, INC.
REPRODUCTION OF THESE PLANS BY ANY MEANS IS PROHIBITED BY FEDERAL LAW.
DO NOT COPY
VIOLATIONS ARE PUNISHABLE BY FINES UP TO $100,000 PER OFFENSE. IF THIS STAMP IS NOT RED, THEN IT IS ILLEGAL. CALL COD, INC. AT 843-782-4077 TO OBTAIN LEGAL COPIES OF THIS PLAN.
IT IS AN ILLEGAL SET OF PLANS

FRONT ELEVATION

SCALE: 1/4"=1'-0"

REAR ELEVATION

SCALE: 1/4"=1'-0"

TO THE BEST OF MY KNOWLEDGE THESE PLANS ARE DRAWN TO COMPLY WITH THE HOMEOWNER'S AND/OR BUILDER'S SPECIFICATIONS AND ANY CHANGES MADE TO THEM AFTER PRINTS ARE MADE WILL BE DONE AT THE HOMEOWNER'S AND/OR BUILDER'S EXPENSE AND RESPONSIBILITY. THE CONTRACTOR SHALL VERIFY ALL DIMENSIONS AND ENCLOSED DRAWINGS PRIOR TO CONSTRUCTION. COOK DESIGN STUDIO, INC. IS NOT LIABLE FOR ERRORS ONCE CONSTRUCTION HAS BEGUN. WHILE EVERY EFFORT HAS BEEN MADE IN THE PREPARATION OF THIS PLAN TO AVOID MISTAKES, THE MAKER CAN NOT GUARANTEE AGAINST HUMAN ERROR. THE CONTRACTOR OF THE JOB MUST CHECK ALL DIMENSIONS AND OTHER DETAILS PRIOR TO CONSTRUCTION AND IS SOLELY RESPONSIBLE THEREAFTER.

HOMEOWNER WILL TAKE THE NECESSARY PRECAUTIONS TO REMOVE OR RELOCATE ITEMS OF VALUE TO BE REUSED AND/OR SAVED, OR IN ANY DANGER OF BEING DAMAGED DUE TO CONSTRUCTION PROCESS. CONTRACTOR SHALL VERIFY ALL DIMENSIONS AND CONDITIONS ON SITE BEFORE CONSTRUCTION BEGINS. ANY DISCREPANCIES SHALL BE REPORTED TO COOK DESIGN STUDIO, INC. FOR CORRECTIONS BEFORE PROCEEDING WITH CONSTRUCTION. CONTRACTOR AND/OR HOMEOWNER SHALL ASSUME RESPONSIBILITY FOR ERRORS THAT ARE NOT REPORTED.

DRAWING NOTES:

1. DRAWINGS ARE NOT INTENDED TO BE SCALED.
2. EXISTING CONDITIONS TO BE FIELD VERIFIED BY THE CONTRACTOR PRIOR TO CONSTRUCTION.
3. THE DESIGNER IS TO BE NOTIFIED OF ANY VARIATIONS FROM THE DRAWING SPECIFICATIONS.
4. ALL DRAWINGS AND SPECIFICATIONS INCLUDED IN THIS DRAWING SET ARE SPECIFIC TO THIS PARTICULAR SITE LOCATION/BUILDING AND ARE THE PROPERTY OF COOK DESIGN STUDIO, INC. ANY UNAUTHORIZED USE OR REPRODUCTION OF THIS INFORMATION IS SUBJECT TO LEGAL PROSECUTION.

THIS PLAN IS THE PROPERTY OF COOK DESIGN STUDIO, INC. THE PURCHASER OF THIS PLAN IS GRANTED THE RIGHT TO CONSTRUCT A TOTAL OF ONLY ONE PROJECT FROM THIS PLAN. IT IS UNLAWFUL TO REPRODUCE ANY PART OF THIS PLAN EITHER ON PAPER OR ON SITE, WITHOUT THE WRITTEN CONSENT FROM THE DESIGNER. CONSTRUCTION OF THIS PLAN IS TO BE IN CONFORMATION WITH ALL LOCAL ORDINANCES AND BLDG. CODES APPLICABLE. CONTRACTOR AND SUB-CONTRACTORS SHOULD CHECK ALL DRAWINGS PRIOR TO CONSTRUCTION.

NO.	DATE	REVISIONS
-		

PREPARED FOR:

Dylan & Amanda Mingard
41 Stock Farm Road
Bluffton, SC 29910

MEMBER
AIBD
AMERICAN INSTITUTE of BUILDING DESIGN

N·C·B·D·C
NATIONAL COUNCIL OF BUILDING DESIGNER CERTIFICATION
B. Scott Cook
Scott Cook
CERTIFICATION NO. 41-117
SEAL DATE: 04-30-2025

COOK DESIGN STUDIO, Inc.
804 WIGHMAN STREET
WALTERBORO, SC 29488
(843) 782-4077

DRAWN BY:	BSC
CHECK BY:	WHB
JOB:	6858-177-2025
DATE:	04-30-2025

A201

IF THIS STAMP IS NOT RED
COOK DESIGN STUDIO, INC.
REPRODUCTION OF THESE PLANS BY ANY MEANS IS PROHIBITED BY FEDERAL LAW.
DO NOT COPY
VIOLATIONS ARE PUNISHABLE BY FINES UP TO $100,000 PER OFFENSE. IF THIS STAMP IS NOT RED, THEN IT IS ILLEGAL. CALL COD, INC. AT 843-782-4077 TO OBTAIN LEGAL COPIES OF THIS PLAN.
IT IS AN ILLEGAL SET OF PLANS

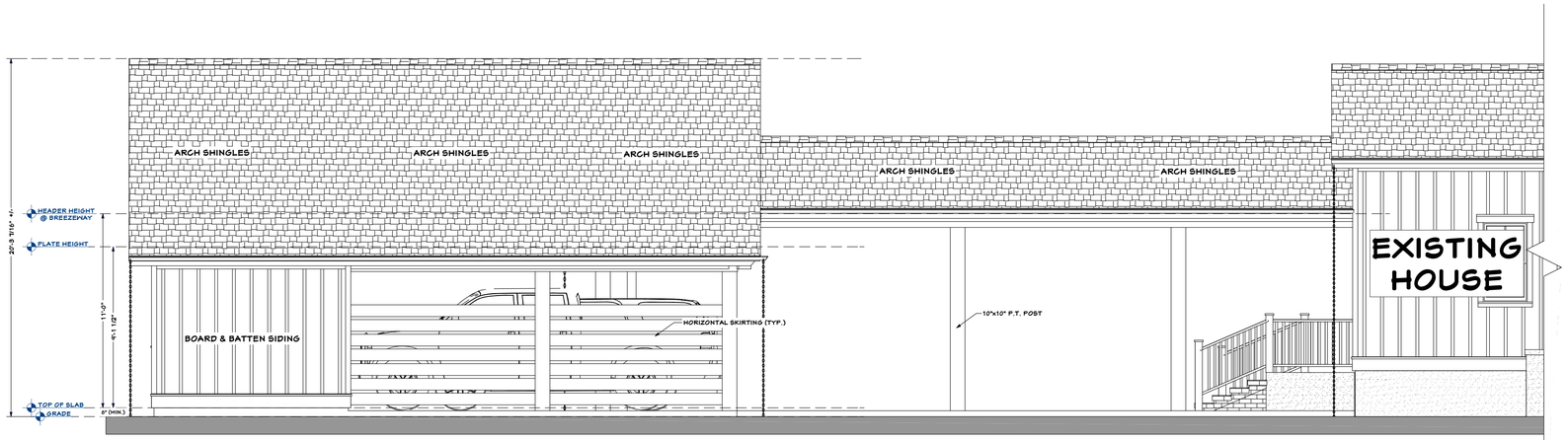

LEFT ELEVATION

SCALE: 1/4"=1'-0"

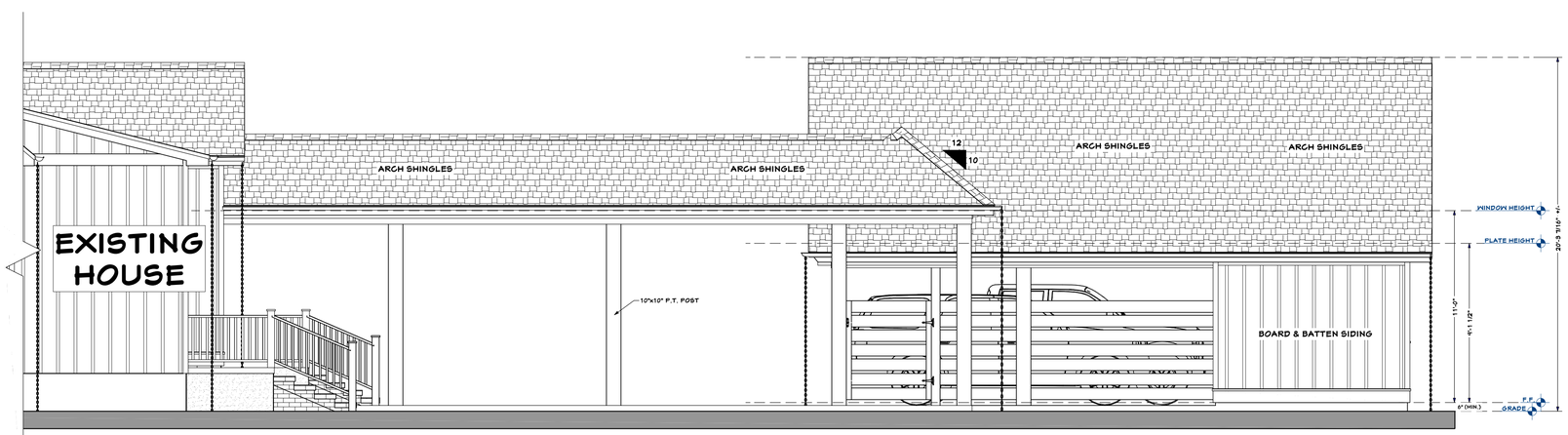

RIGHT ELEVATION

SCALE: 1/4"=1'-0"

TO THE BEST OF MY KNOWLEDGE THESE PLANS ARE DRAWN TO COMPLY WITH THE HOMEOWNER'S AND/OR BUILDER'S SPECIFICATIONS AND ANY CHANGES MADE TO THEM AFTER PRINTS ARE MADE WILL BE DONE AT THE HOMEOWNER'S AND/OR BUILDER'S EXPENSE AND RESPONSIBILITY. THE CONTRACTOR SHALL VERIFY ALL DIMENSIONS AND ENCLOSED DRAWINGS PRIOR TO CONSTRUCTION. COOK DESIGN STUDIO, INC. IS NOT LIABLE FOR ERRORS ONCE CONSTRUCTION HAS BEGUN. WHILE EVERY EFFORT HAS BEEN MADE IN THE PREPARATION OF THIS PLAN TO AVOID MISTAKES, THE MAKER CAN NOT GUARANTEE AGAINST HUMAN ERROR. THE CONTRACTOR OF THE JOB MUST CHECK ALL DIMENSIONS AND OTHER DETAILS PRIOR TO CONSTRUCTION AND IS SOLELY RESPONSIBLE THEREAFTER.

HOMEOWNER WILL TAKE THE NECESSARY PRECAUTIONS TO REMOVE OR RELOCATE ITEMS OF VALUE TO BE REUSED AND/OR SAVED, OR IN ANY DANGER OF BEING DAMAGED DUE TO CONSTRUCTION PROCESS. CONTRACTOR SHALL VERIFY ALL DIMENSIONS AND CONDITIONS ON SITE BEFORE CONSTRUCTION BEGINS. ANY DISCREPANCIES SHALL BE REPORTED TO COOK DESIGN STUDIO, INC. FOR CORRECTIONS BEFORE PROCEEDING WITH CONSTRUCTION. CONTRACTOR AND/OR HOMEOWNER SHALL ASSUME RESPONSIBILITY FOR ERRORS THAT ARE NOT REPORTED.

DRAWING NOTES:

1. DRAWINGS ARE NOT INTENDED TO BE SCALED.
2. EXISTING CONDITIONS TO BE FIELD VERIFIED BY THE CONTRACTOR PRIOR TO CONSTRUCTION.
3. THE DESIGNER IS TO BE NOTIFIED OF ANY VARIATIONS FROM THE DRAWING SPECIFICATIONS.
4. ALL DRAWINGS AND SPECIFICATIONS INCLUDED IN THIS DRAWING SET ARE SPECIFIC TO THIS PARTICULAR SITE LOCATION/BUILDING AND ARE THE PROPERTY OF COOK DESIGN STUDIO, INC. ANY UNAUTHORIZED USE OR REPRODUCTION OF THIS INFORMATION IS SUBJECT TO LEGAL PROSECUTION.

THIS PLAN IS THE PROPERTY OF COOK DESIGN STUDIO, INC. THE PURCHASER OF THIS PLAN IS GRANTED THE RIGHT TO CONSTRUCT A TOTAL OF ONLY ONE PROJECT FROM THIS PLAN. IT IS UNLAWFUL TO REPRODUCE ANY PART OF THIS PLAN EITHER ON PAPER OR ON SITE, WITHOUT THE WRITTEN CONSENT FROM THE DESIGNER. CONSTRUCTION OF THIS PLAN IS TO BE IN CONFORMATION WITH ALL LOCAL ORDINANCES AND BLDG. CODES APPLICABLE. CONTRACTOR AND SUB-CONTRACTORS SHOULD CHECK ALL DRAWINGS PRIOR TO CONSTRUCTION.

NO.	DATE	REVISIONS
1		

PREPARED FOR:

Dylan & Amanda Mingard
41 Stock Farm Road
Bluffton, SC 29910

MEMBER AIBD AMERICAN INSTITUTE of BUILDING DESIGN

N·C·B·D·C NATIONAL COUNCIL OF BUILDING DESIGNER CERTIFICATION
Scott Cook CERTIFICATION NO. 41-117

SEAL DATE: 04-30-2025

COOK DESIGN STUDIO, Inc.
804 WIGHMAN STREET
WALTERBORO, SC 29488
(843) 782-4077

DRAWN BY:	BSC
CHECK BY:	WHB
JOB:	6858-177-2025
DATE:	04-30-2025

A202

IF THIS STAMP IS NOT RED
© COOK DESIGN STUDIO, INC.
REPRODUCTION OF THESE PLANS BY ANY MEANS IS PROHIBITED BY FEDERAL LAW.
DO NOT COPY

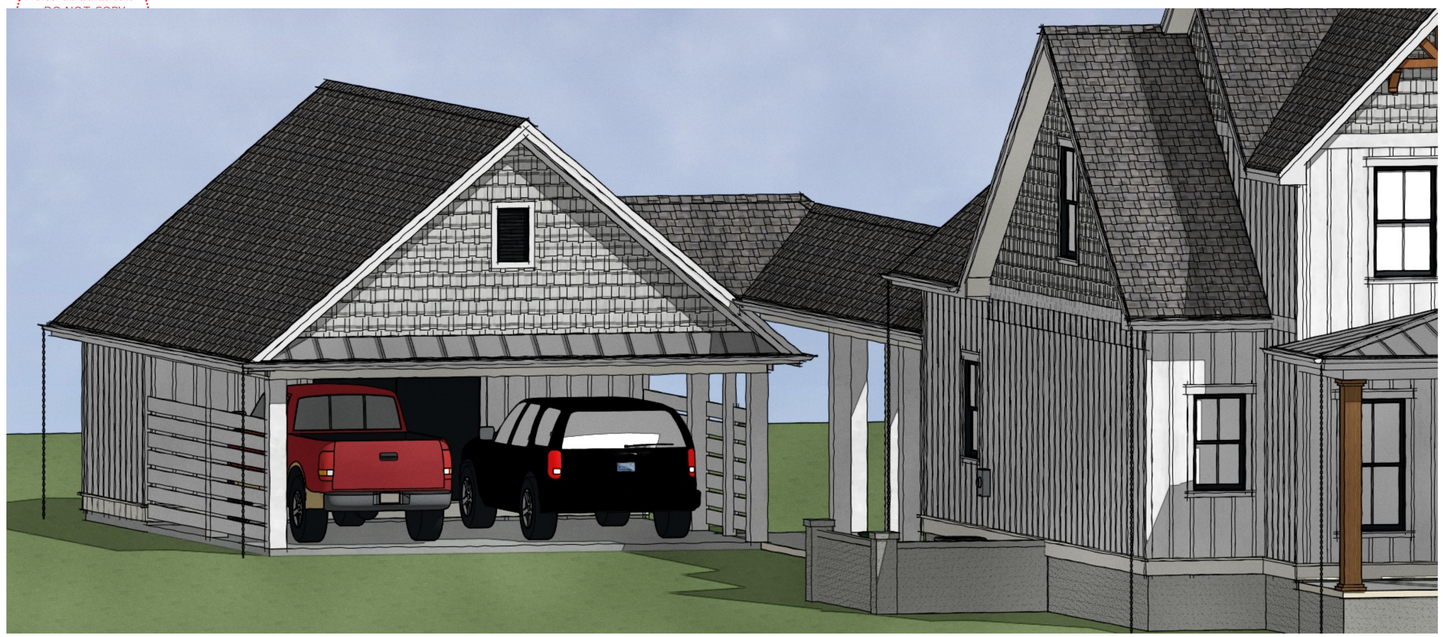

3D FRONT EXTERIOR RENDERING

N.T.S.

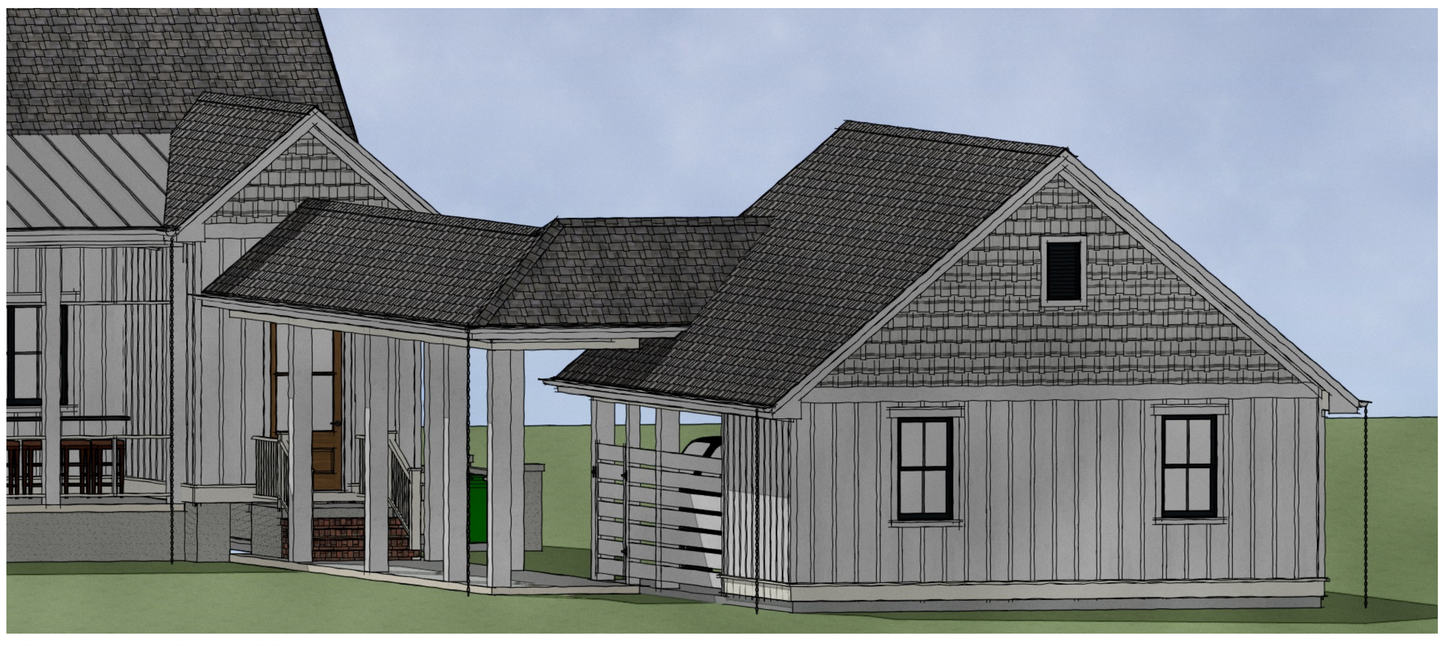

3D REAR EXTERIOR RENDERING

N.T.S.

TO THE BEST OF MY KNOWLEDGE THESE PLANS ARE DRAWN TO COMPLY WITH THE HOMEOWNER'S AND/OR BUILDER'S SPECIFICATIONS AND ANY CHANGES MADE TO THEM AFTER PRINTS ARE MADE WILL BE DONE AT THE HOMEOWNER'S AND/OR BUILDER'S EXPENSE AND RESPONSIBILITY. THE CONTRACTOR SHALL VERIFY ALL DIMENSIONS AND ENCLOSED DRAWINGS PRIOR TO CONSTRUCTION. COOK DESIGN STUDIO, INC. IS NOT LIABLE FOR ERRORS ONCE CONSTRUCTION HAS BEGUN. WHILE EVERY EFFORT HAS BEEN MADE IN THE PREPARATION OF THIS PLAN TO AVOID MISTAKES, THE MAKER CAN NOT GUARANTEE AGAINST HUMAN ERROR. THE CONTRACTOR OF THE JOB MUST CHECK ALL DIMENSIONS AND OTHER DETAILS PRIOR TO CONSTRUCTION AND IS SOLELY RESPONSIBLE THEREAFTER.

HOMEOWNER WILL TAKE THE NECESSARY PRECAUTIONS TO REMOVE OR RELOCATE ITEMS OF VALUE TO BE REUSED AND/OR SAVED, OR IN ANY DANGER OF BEING DAMAGED DUE TO CONSTRUCTION PROCESS. CONTRACTOR SHALL VERIFY ALL DIMENSIONS AND CONDITIONS ON SITE BEFORE CONSTRUCTION BEGINS. ANY DISCREPANCIES SHALL BE REPORTED TO COOK DESIGN STUDIO, INC. FOR CORRECTIONS BEFORE PROCEEDING WITH CONSTRUCTION. CONTRACTOR AND/OR HOMEOWNER SHALL ASSUME RESPONSIBILITY FOR ERRORS THAT ARE NOT REPORTED.

DRAWING NOTES:

1. DRAWINGS ARE NOT INTENDED TO BE SCALED.
2. EXISTING CONDITIONS TO BE FIELD VERIFIED BY THE CONTRACTOR PRIOR TO CONSTRUCTION.
3. THE DESIGNER IS TO BE NOTIFIED OF ANY VARIATIONS FROM THE DRAWING SPECIFICATIONS.
4. ALL DRAWINGS AND SPECIFICATIONS INCLUDED IN THIS DRAWING SET ARE SPECIFIC TO THIS PARTICULAR SITE LOCATION/BUILDING AND ARE THE PROPERTY OF COOK DESIGN STUDIO, INC. ANY UNAUTHORIZED USE OR REPRODUCTION OF THIS INFORMATION IS SUBJECT TO LEGAL PROSECUTION.

THIS PLAN IS THE PROPERTY OF COOK DESIGN STUDIO, INC. THE PURCHASER OF THIS PLAN IS GRANTED THE RIGHT TO CONSTRUCT A TOTAL OF ONLY ONE PROJECT FROM THIS PLAN. IT IS UNLAWFUL TO REPRODUCE ANY PART OF THIS PLAN EITHER ON PAPER OR ON SITE, WITHOUT THE WRITTEN CONSENT FROM THE DESIGNER. CONSTRUCTION OF THIS PLAN IS TO BE IN CONFORMATION WITH ALL LOCAL ORDINANCES AND BLDG. CODES APPLICABLE. CONTRACTOR AND SUB-CONTRACTORS SHOULD CHECK ALL DRAWINGS PRIOR TO CONSTRUCTION.

NO.	DATE	REVISIONS
-		

PREPARED FOR:

Dylan & Amanda Mingard
41 Stock Farm Road
Bluffton, SC 29910

MEMBER
AIBD
AMERICAN INSTITUTE of BUILDING DESIGN

N·C·B·D·C
NATIONAL COUNCIL OF BUILDING DESIGNER CERTIFICATION
Scott Cook
CERTIFICATION NO. 41-117
SEAL DATE: 04-30-2025

COOK DESIGN STUDIO, Inc.
804 WIGHMAN STREET
WALTERBORO, SC 29488
(843) 782-4077

DRAWN BY:	BSC
CHECK BY:	WHB
JOB:	6858-177-2025
DATE:	04-30-2025

A301

IF THIS STAMP IS NOT RED
COOK DESIGN STUDIO, INC.
REPRODUCTION OF THESE PLANS BY ANY MEANS IS PROHIBITED BY FEDERAL LAW.
DO NOT COPY
VIOLATIONS ARE PUNISHABLE BY FINES UP TO $100,000 PER OFFENSE. IF THIS STAMP IS NOT RED, THEN IT IS ILLEGAL. CALL CDS, INC. AT 843-782-4077 TO OBTAIN LEGAL COPIES OF THIS PLAN.
IS AN ILLEGAL SET OF PLANS

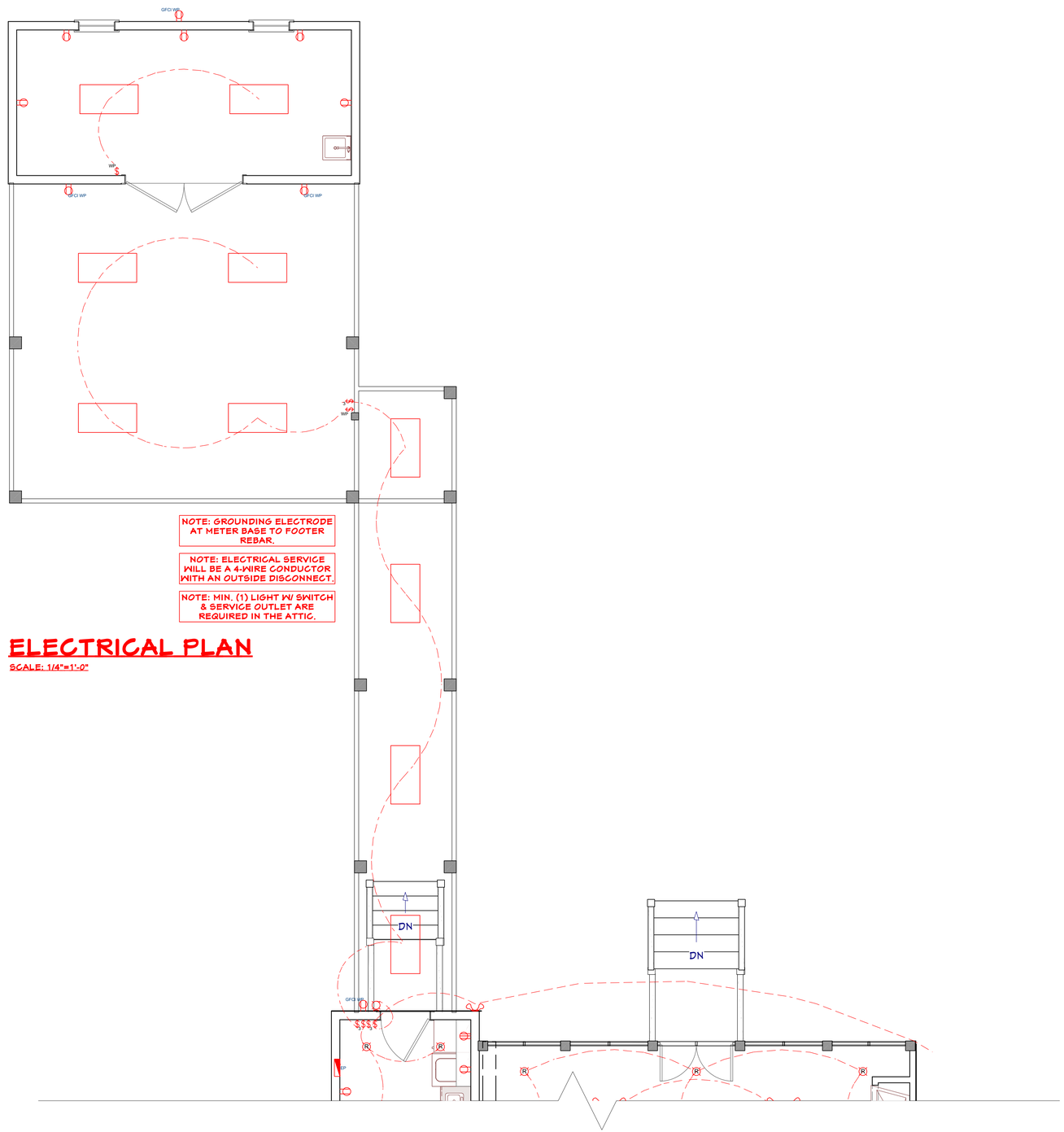

NOTE: GROUNDING ELECTRODE AT METER BASE TO FOOTER REBAR.

NOTE: ELECTRICAL SERVICE WILL BE A 4-WIRE CONDUCTOR WITH AN OUTSIDE DISCONNECT.

NOTE: MIN. (1) LIGHT W SWITCH & SERVICE OUTLET ARE REQUIRED IN THE ATTIC.

ELECTRICAL PLAN

SCALE: 1/4"=1'-0"

ELECTRICAL LEGEND

SYMBOL	DESCRIPTION
	METER SOCKET
	PANEL BOX
	CEILING FAN W/ LIGHT
	FLUORESCENT LIGHT FIXTURE
	110V CEILING LIGHT FIXTURE
	110V RECESSED LIGHT FIXTURE
	110V EAVE LIGHT FIXTURE
	110V CHANDELIER LIGHT FIXTURE
	110V WALL LIGHT FIXTURE
	SINGLE POLE SWITCH
3	THREE WAY SWITCH
4	FOUR WAY SWITCH
D	DIMMER SWITCH
O	OUTDOOR SWITCH
	110V DUPLEX RECEPTACLE
GFI	110V DUPLEX RECEPTACLE GROUND FAULT INTERRUPTED
WP	110V DUPLEX RECEPTACLE W/ WEATHERPROOF COVER
	110V QUADPLEX RECEPTACLE
	110VFLOOR MOUNTED DUPLEX RECEPTACLE
	240V RECEPTACLE
	TELEPHONE JACKS
TV	TELEVISION JACKS
	DOOR BELL PUSH BUTTON
T	THERMOSTAT
SD	SMOKE DETECTOR
	EXHAUST FAN
DC	DOOR CHIME
F	FIRE ALARM PANEL
	COMPUTER POINT
CO	CARBON MONOXIDE DETECTOR

THIS PLAN IS THE PROPERTY OF COOK DESIGN STUDIO, INC. THE PURCHASER OF THIS PLAN IS GRANTED THE RIGHT TO CONSTRUCT A TOTAL OF ONLY ONE PROJECT FROM THIS PLAN. IT IS UNLAWFUL TO REPRODUCE ANY PART OF THIS PLAN EITHER ON PAPER OR ON SITE, WITHOUT THE WRITTEN CONSENT FROM THE DESIGNER. CONSTRUCTION OF THIS PLAN IS TO BE IN CONFORMATION WITH ALL LOCAL ORDINANCES AND BLDG. CODES APPLICABLE. CONTRACTOR AND SUB-CONTRACTORS SHOULD CHECK ALL DRAWINGS PRIOR TO CONSTRUCTION.

NO.	DATE	REVISIONS
1		

PREPARED FOR:
Dylan & Amanda Mingard
41 Stock Farm Road
Bluffton, SC 29910

MEMBER
AIBD
AMERICAN INSTITUTE of BUILDING DESIGN

N·C·B·D·C
NATIONAL COUNCIL OF BUILDING DESIGNER CERTIFICATIONS
Scott Cook
CERTIFICATION NO. 41-117
SEAL DATE: 04-30-2025

COOK DESIGN STUDIO, Inc.
804 WIGHMAN STREET
WALTERBORO, SC 29488
(843) 782-4077

DRAWN BY:	BSC
CHECK BY:	WHB
JOB:	6858-177-2025
DATE:	04-30-2025

E101

IF THIS STAMP IS NOT RED
COOK DESIGN STUDIO, INC.
REPRODUCTION OF THESE PLANS BY ANY MEANS IS PROHIBITED BY FEDERAL LAW
DO NOT COPY
VIOLATIONS ARE PUNISHABLE BY FINES UP TO $100,000 PER OFFENSE. IF THIS STAMP IS NOT RED, THEN IT IS ILLEGAL. CALL CDS, INC. AT 843-782-4077 TO OBTAIN LEGAL COPIES OF THIS PLAN.
IS AN ILLEGAL SET OF PLANS

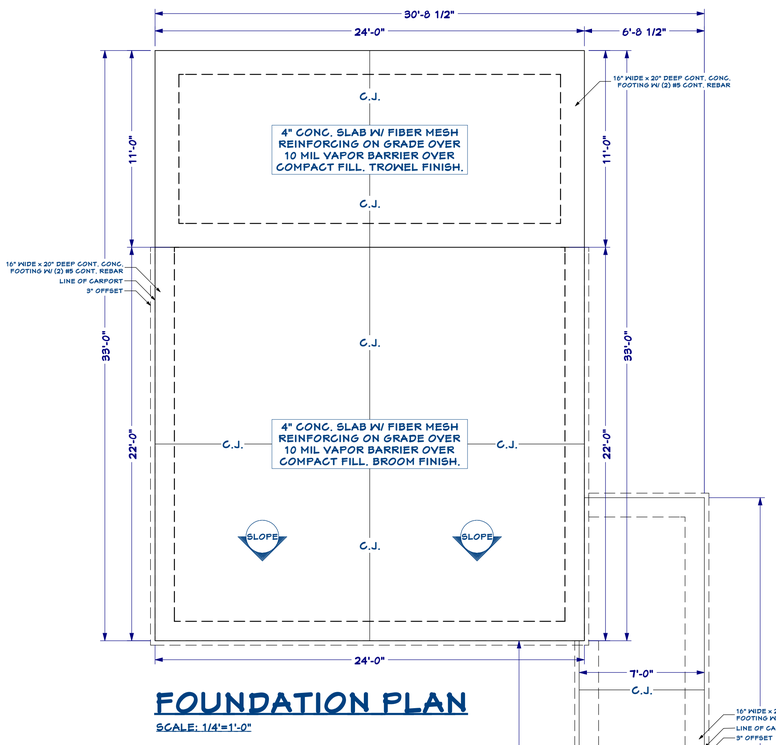

FOUNDATION PLAN

SCALE: 1/4"=1'-0"

NOTE: C.J.= CONTROL JOINTS PER CODE

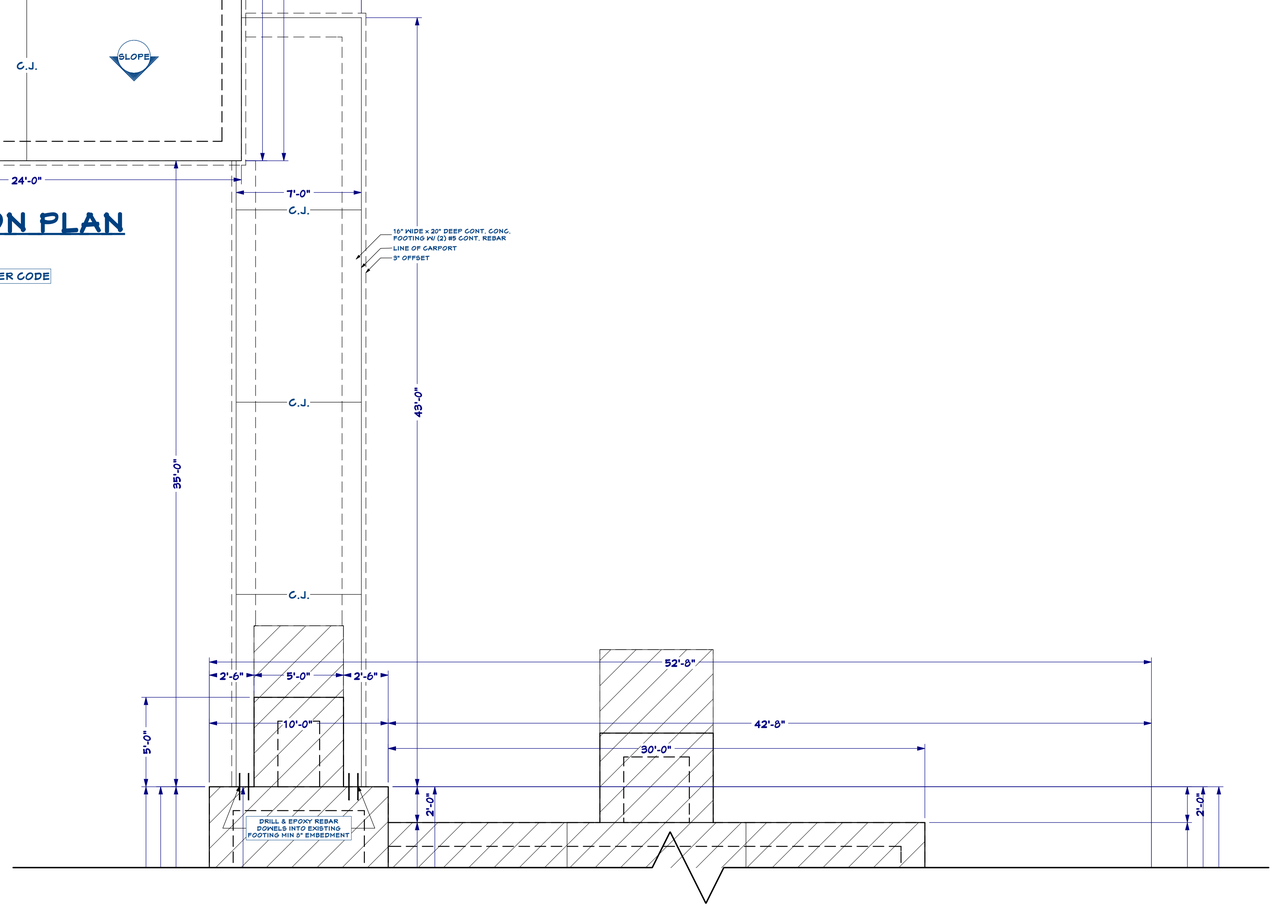

THIS PLAN IS THE PROPERTY OF WILLIAM H. BRANHAM III, P.E. THE PURCHASER OF THIS PLAN IS GRANTED THE RIGHT TO CONSTRUCT A TOTAL OF ONLY ONE PROJECT FROM THIS PLAN. IT IS UNLAWFUL TO REPRODUCE ANY PART OF THIS PLAN EITHER ON PAPER OR ON SITE, WITHOUT THE WRITTEN CONSENT FROM WILLIAM H. BRANHAM III, P.E. CONSTRUCTION OF THIS PLAN IS TO BE IN CONFORMATION WITH ALL LOCAL ORDINANCES AND BLDG. CODES APPLICABLE. CONTRACTOR AND SUB-CONTRACTORS SHOULD CHECK ALL DRAWINGS PRIOR TO CONSTRUCTION.

NO.	DATE	REVISIONS
1		

PREPARED FOR:

Dylan & Amanda Mingard
41 Stock Farm Road
Bluffton, SC 29910

SOUTH CAROLINA REGISTERED PROFESSIONAL ENGINEER
No.16901
WILLIAM H. BRANHAM III

SEAL DATE: 04-30-2025

WILLIAM H. BRANHAM III, P.E.
PO BOX 147
MT. PLEASANT, SC 29465

DRAWN BY:	BSC
CHECK BY:	WHB
JOB:	6858-177-2025
DATE:	04-30-2025

S101

IF THIS STAMP IS NOT RED
© COOK DESIGN STUDIO, INC.
REPRODUCTION OF THESE PLANS BY ANY MEANS IS PROHIBITED BY FEDERAL LAW.
DO NOT COPY
VIOLATIONS ARE PUNISHABLE BY FINES UP TO $100,000 PER OFFENSE. IF THIS STAMP IS NOT RED, THEN IT IS ILLEGAL. CALL CDS, INC. AT 843-782-4017 TO OBTAIN LEGAL COPIES OF THIS PLAN.
IS AN ILLEGAL SET OF PLANS

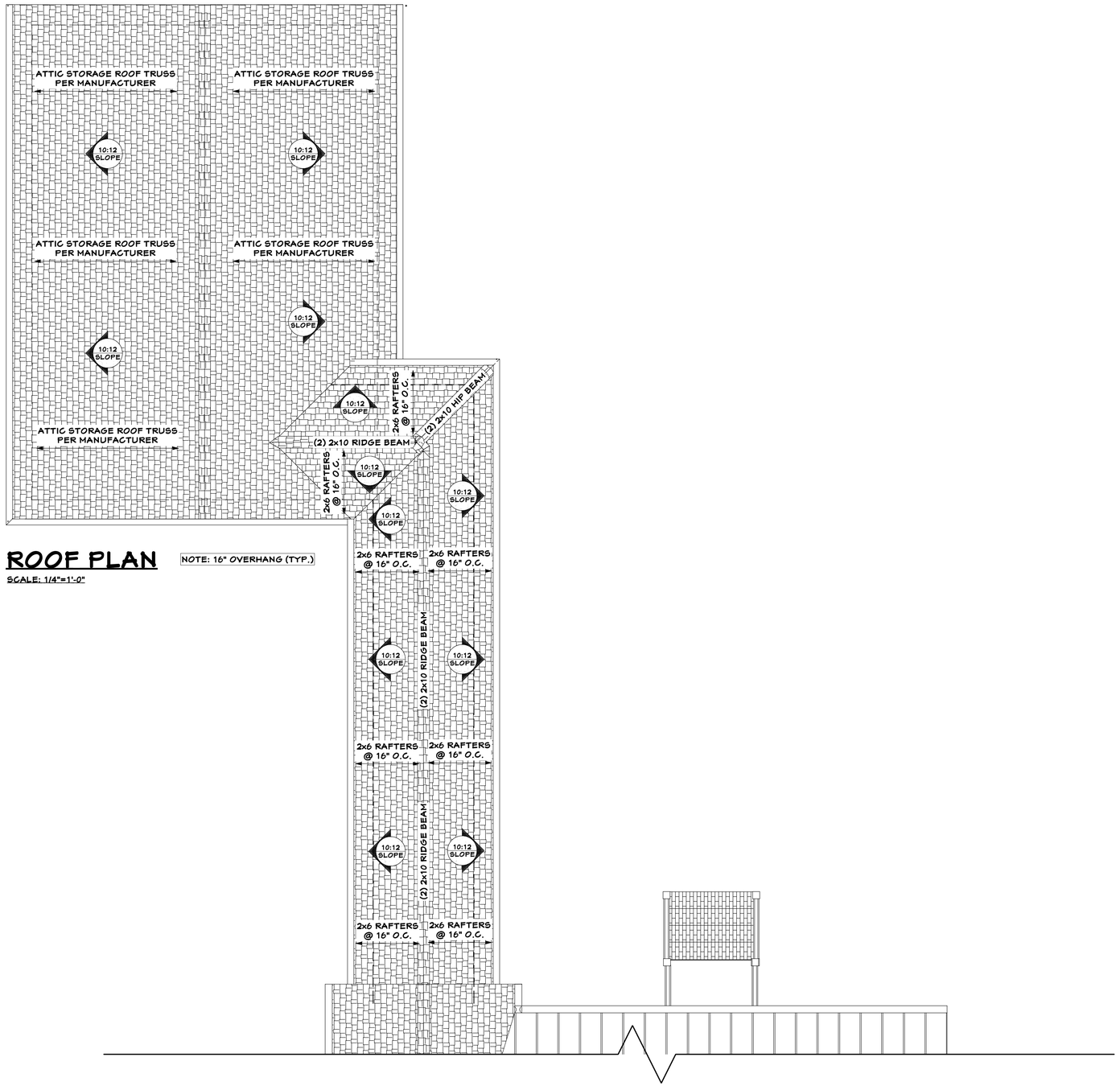

ROOF PLAN

SCALE: 1/4"=1'-0"

NOTE: 16" OVERHANG (TYP.)

THIS PLAN IS THE PROPERTY OF WILLIAM H. BRANHAM III, P.E. THE PURCHASER OF THIS PLAN IS GRANTED THE RIGHT TO CONSTRUCT A TOTAL OF ONLY ONE PROJECT FROM THIS PLAN. IT IS UNLAWFUL TO REPRODUCE ANY PART OF THIS PLAN EITHER ON PAPER OR ON SITE, WITHOUT THE WRITTEN CONSENT FROM WILLIAM H. BRANHAM III, P.E. CONSTRUCTION OF THIS PLAN IS TO BE IN CONFORMATION WITH ALL LOCAL ORDINANCES AND BLDG. CODES APPLICABLE. CONTRACTOR AND SUB-CONTRACTORS SHOULD CHECK ALL DRAWINGS PRIOR TO CONSTRUCTION.

NO.	DATE	REVISIONS
1		

PREPARED FOR:

Dylan & Amanda Mingard
41 Stock Farm Road
Bluffton, SC 29910

SOUTH CAROLINA REGISTERED PROFESSIONAL ENGINEER
No.16901
WILLIAM H. BRANHAM III

SEAL DATE: 04-30-2025

WILLIAM H. BRANHAM III, P.E.
PO BOX 147
MT. PLEASANT, SC 29465

DRAWN BY: BSC
CHECK BY: WHB
JOB: 6858-177-2025
DATE: 04-30-2025

S102

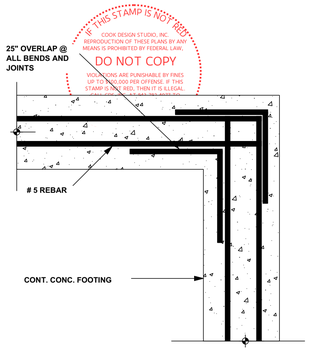

IF THIS STAMP IS NOT RED
© COOK DESIGN STUDIO, INC.
REPRODUCTION OF THESE PLANS BY ANY MEANS IS PROHIBITED BY FEDERAL LAW
DO NOT COPY
VIOLATIONS ARE PUNISHABLE BY FINES UP TO $100,000 PER OFFENSE. IF THIS STAMP IS NOT RED, THEN IT IS ILLEGAL

REBAR OVERLAP DETAIL

NOTE: INSULATE AROUND ALL BATH & LAUNDRY AREAS

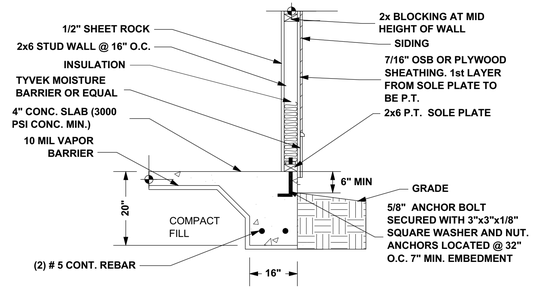

FOOTING & WALL DETAIL

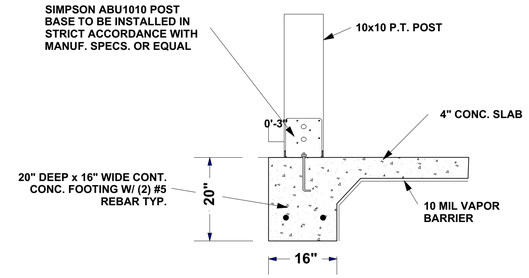

DETAIL @ CARPORT

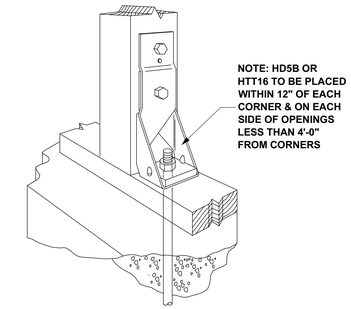

SIMPSON STRONG-TIE HOLD DOWN

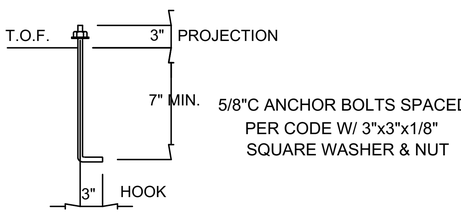

5/8"C ANCHOR BOLT 13" LONG

NOTE: ANCHOR BOLTS MAY BE 10" LONG
EPOXY SET BOLTS IF PROVIDED AFTER SLAB

TYPICAL SILL PLATE ANCHOR BOLT DETAIL

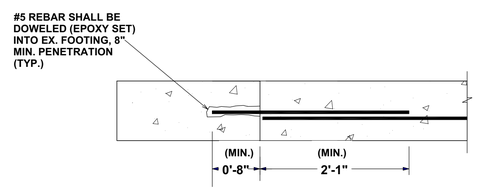

DOWEL @ EXISTING FOOTING

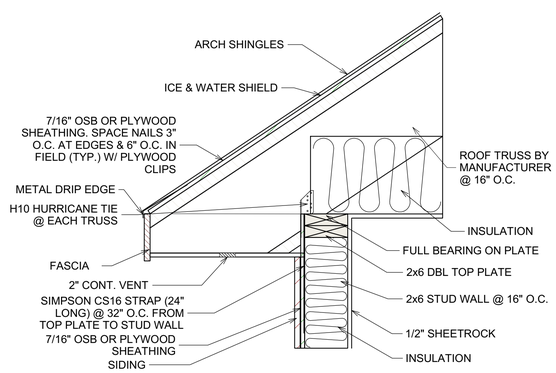

ROOF DETAIL

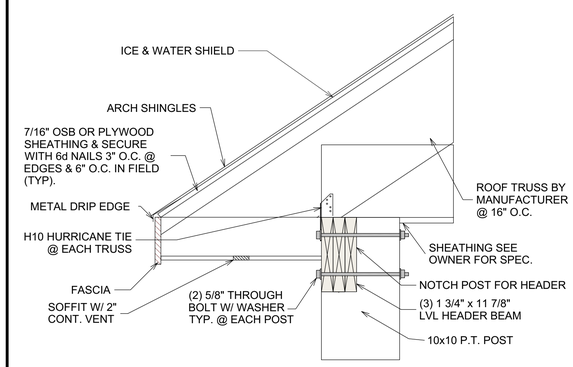

ROOF DETAIL @ CARPORT

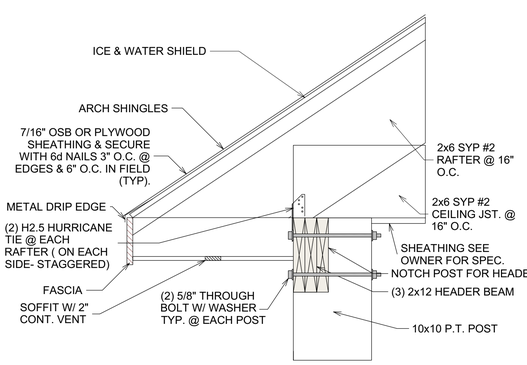

ROOF DETAIL @ BREEZEWAY

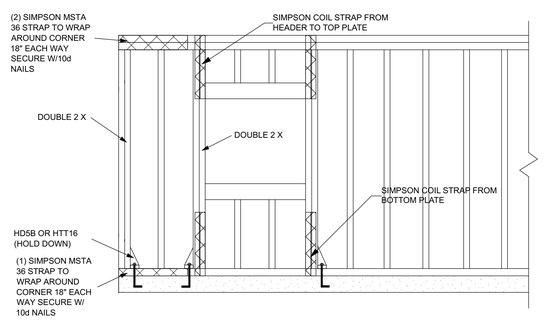

DETAIL AT WINDOW & DOOR OPENINGS (TYPICAL FOR ALL OPENINGS LESS THAN 4'-0" FROM CORNER)

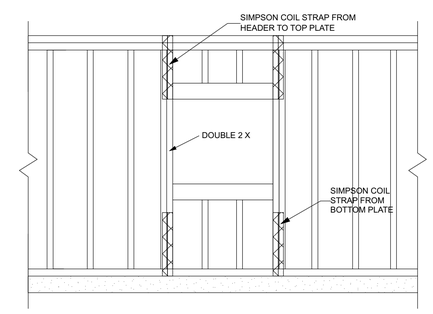

DETAIL AT WINDOW & DOOR OPENINGS (TYPICAL FOR ALL OPENINGS)

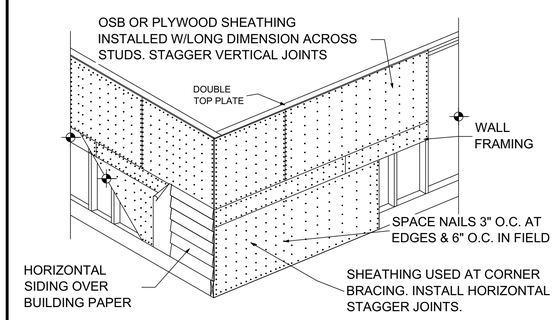

WALL SHEATHING DETAIL

THIS PLAN IS THE PROPERTY OF WILLIAM H. BRANHAM III, P.E. THE PURCHASER OF THIS PLAN IS GRANTED THE RIGHT TO CONSTRUCT A TOTAL OF ONLY ONE PROJECT FROM THIS PLAN. IT IS UNLAWFUL TO REPRODUCE ANY PART OF THIS PLAN EITHER ON PAPER OR ON SITE, WITHOUT THE WRITTEN CONSENT FROM WILLIAM H. BRANHAM III, P.E. CONSTRUCTION OF THIS PLAN IS TO BE IN CONFORMATION WITH ALL LOCAL ORDINANCES AND BLDG. CODES APPLICABLE. CONTRACTOR AND SUB-CONTRACTORS SHOULD CHECK ALL DRAWINGS PRIOR TO CONSTRUCTION.

NO.	DATE	REVISIONS
1		

PREPARED FOR:
Dylan & Amanda Mingard
41 Stock Farm Road
Bluffton, SC 29910

SOUTH CAROLINA REGISTERED PROFESSIONAL ENGINEER No.16901 WILLIAM H. BRANHAM III

SEAL DATE: 04-30-2025

WILLIAM H. BRANHAM III, P.E.
PO BOX 147
MT. PLEASANT, SC 29465

DRAWN BY:	BSC
CHECK BY:	WHB
JOB:	6858-177-2025
DATE:	04-30-2025

S103

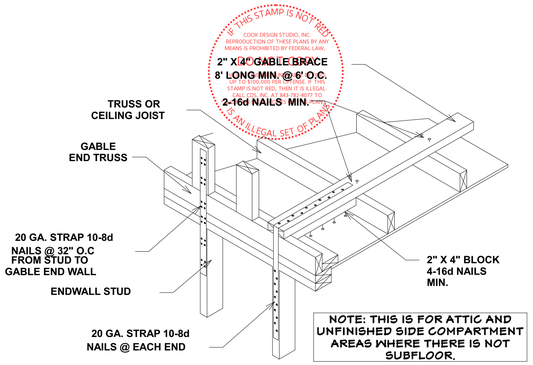

GABLE END BRACING

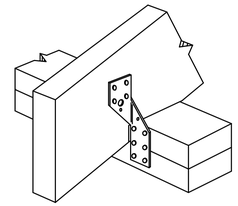

(2) RAFTER H2.5A HURRICANE CLIP

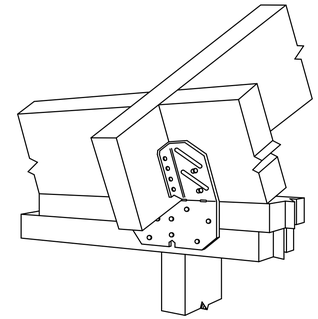

RAFTER H10 HURRICANE CLIP

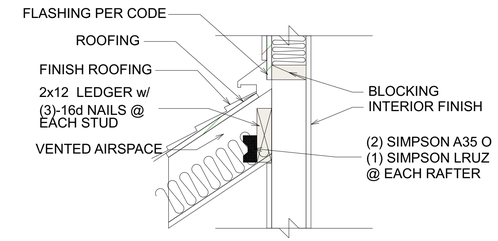

SHED ROOF ANCHORED TO WOOD WALL

THIS PLAN IS THE PROPERTY OF WILLIAM H. BRANHAM III, P.E. THE PURCHASER OF THIS PLAN IS GRANTED THE RIGHT TO CONSTRUCT A TOTAL OF ONLY ONE PROJECT FROM THIS PLAN. IT IS UNLAWFUL TO REPRODUCE ANY PART OF THIS PLAN EITHER ON PAPER OR ON SITE, WITHOUT THE WRITTEN CONSENT FROM WILLIAM H. BRANHAM III, P.E. CONSTRUCTION OF THIS PLAN IS TO BE IN CONFORMATION WITH ALL LOCAL ORDINANCES AND BLDG. CODES APPLICABLE. CONTRACTOR AND SUB-CONTRACTORS SHOULD CHECK ALL DRAWINGS PRIOR TO CONSTRUCTION.

NO.	DATE	REVISIONS
1		

PREPARED FOR:

Dylan & Amanda Mingard
41 Stock Farm Road
Bluffton, SC 29910

SEAL DATE: 04-30-2025

WILLIAM H. BRANHAM III, P.E.
PO BOX 147
MT. PLEASANT, SC 29465

DRAWN BY: BSC
CHECK BY: WHB
JOB: 6858-177-2025
DATE: 04-30-2025

S104

IF THIS STAMP IS NOT RED
© COOK DESIGN STUDIO, INC.
REPRODUCTION OF THESE PLANS BY ANY MEANS IS PROHIBITED BY FEDERAL LAW.
DO NOT COPY
VIOLATORS SUBJECT TO PROSECUTION BY FINES UP TO $100,000 PER OFFENSE. IF THIS STAMP IS NOT RED, THEN IT IS ILLEGAL. CALL COD, INC. AT 843-792-4077 TO REPORT VIOLATORS. ALL PLANS MUST HAVE RED INK STAMP TO BE VALID.

GLAZED OPENINGS GENERAL NOTES

WINDOWS, GLASS DOORS & SKYLIGHTS SHALL BE APPROVED AND INSTALLED TO COMPLY WITH BOTH NEGATIVE AND POSITIVE PRESSURES AS REQUIRED BY ICC 600. DOCUMENTATION OF COMPLIANCE SHALL BE AVAILABLE ON SITE FOR EACH WINDOW, DOOR OR SKYLIGHT AT THE FRAMING INSPECTION. (ICC 600)

ALL GLAZING IN DOORS, WINDOWS, OR SKYLIGHTS SHALL BE TESTED FOR 'LARGE MISSILE IMPACT RESISTANCE' AS NOTED BELOW. OPTION: PROVIDE WOOD STRUCTURAL PANELS FOR EACH OPENING. PANELS WILL HAVE A MINIMUM THICKNESS OF 7/16 INCHES AND A MAXIMUM SPAN OF 8'.

PANELS MUST BE PRECUT TO SIZE, AND ATTACHMENT HARDWARE PROVIDED, (PERMANENTLY INSTALLED ON THE STRUCTURE). EACH PANEL SHALL BE NUMBERED OR MARKED TO INDICATE WHICH WINDOW IT SHALL BE INSTALLED OVER.

TEST REQUIREMENTS NOTES:
- WINDOWS ARE TESTED IN ACCORDANCE WITH AAMA 101/I.S.2. 97 SPECIFICATIONS.
- TESTED LARGE MISSILE IMPACT RESISTANCE TO ASTM E1886/E1996.
- TESTED FORCED ENTRY RESISTANCE TO AAMA 1303.2.
- DEGLAZING TESTED TO ASTM E987.
- TESTED WATER RESISTANCE TO ASTM E547/331.
- TESTED AIR INFILTRATION TO ASTM E 283
- TEST REPORTS AVAILABLE UPON REQUEST.

IF APPROVED DOORS, WINDOWS, OR SKYLIGHTS ARE NOT USED, THEN WOOD STRUCTURAL PANELS MUST BE PROVIDED FOR EACH OPENING. PANELS WILL HAVE A MINIMUM THICKNESS OF 7/16 INCHES AND A MAXIMUM SPAN OF 8 FEET. PANELS MUST BE PRECUT TO SIZE WITH ATTACHMENT HARDWARE PROVIDED AND NUMBERED SO THAT A HOMEOWNER WILL BE ABLE TO IDENTIFY THE PROPER LOCATION FOR EACH PANEL.

1. PREDOMINANT "R-VALUES" OF INSULATION INSTALLED IN OF OR CEILING, ROOF,WALLS,FOUNDATION (SLAB, BASEMENT WALL, CRAWLSPACE WALL AND OR FLOOR) AND DUCTS OUTSIDE CONDITIONED SPACES.

2. "U-FACTORS FOR FENESTRATION"; AND THE SOLAR HEAT GAIN COEFFICIENT (SHGC) OF FENESTRATION. WHERE THERE IS MORE THAN ONE VALUE FOR EACH COMPONENT, THE CERTIFICATE SHALL LIST THE VALUE COVERING THE LARGEST AREA.

3. THE CERTIFICATE SHALL LIST THE TYPE AND EFFICIENCY OF HEATING, COOLING AND SERVICE WATER HEATING EQUIPMENT.

4. MUST SEAL AROUND EXTERIOR JOINTS AT WALL AND FLOOR.

5. ALL DUCTS SHALL BE SEALED RCP#6 AND INSULATED WITH R-8 INSULATION.

6. SEAL ALL DUCT WORK, VENTS, PIPING, CABLES, UTILITIES, AND RECESSED LIGHT FIXTURES PENETRATIONS.

7. SEAL ALL PERIMETER OF WINDOWS AND DOORS.

INSULATION (MIN.)

SLOPE CEILINGS --- R19

ATTIC AREAS --- R30

2 X 4 WALLS --- R13

2 X 6 WALLS --- R19

FLOORS --- R19

INSULATE AROUND ALL BATHS AND UTILITY ROOMS.

ATTIC TO BE VENTED PER CODE THROUGH SOFFIT VENTS COMBINED WITH RIDGE VENTS OR GABLE VENTS.

MINIMUM WALL AND HEADER STUD REQUIREMENTS

		MAXIMUM HEADER SPAN (FT.)			
		3 ft	6 ft	9 ft	12 ft
	NUMBER OF HEADER STUDS SUPPORTING EACH END OF THE HEADER				
		1	1	2	2
UNSUPPORTED WALL HEIGHT	STUD SPACING	NUMBER OF FULL LENGTH STUDS AT EACH END OF THE HEADER			
10 FEET OR LESS	16"o/c	2	2	3	3
GREATER THAN 10 FEET	16"o/c	2	2	3	3

DOOR AND WINDOW HEADER SCHEDULE: (WALLS 2x6's @ 16" O.C.)

(3) 2x8's W/ (1/2) PLYWOOD FILLERS FOR UP TO 4'-0" OPENINGS
(3) 2x10's W/ (1/2) PLYWOOD FILLERS FOR UP TO 8'-0" OPENINGS
(3) 2x12's W/ (1/2) PLYWOOD FILLERS FOR UP TO 10'-0" OPENINGS

DOOR AND WINDOW HEADER SCHEDULE: (WALLS 2x4's @ 16" O.C.)

(2) 2x8's W/ (1/2) PLYWOOD FILLERS FOR UP TO 4'-0" OPENINGS
(2) 2x10's W/ (1/2) PLYWOOD FILLERS FOR UP TO 8'-0" OPENINGS
(2) 2x12's W/ (1/2) PLYWOOD FILLERS FOR UP TO 10'-0" OPENINGS

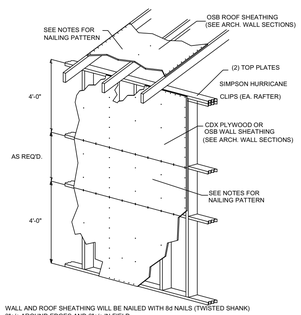

WALL AND ROOF SHEATHING WILL BE NAILED WITH 8d NAILS (TWISTED SHANK)
3"o/c AROUND EDGES AND 6"o/c IN FIELD
PROVIDE SHEATHING SPLICES OVER BLOCKING OR FRAMING
THE SHEATHING MAY BE PLACED EITHER HORIZONTALLY OR VERTICALLY EXCEPT AT CORNERS ALL CORNERS TO BE SHEATHED HORIZONTALLY.

SHEATHING NAILING PATTERN
NOT TO SCALE

STUD HEIGHT / SPACING TABLE

UNSUPPORTED WALL HEIGHT (feet)	STUD SIZE/SPACING (SPECIES/SPECIFICATION)
UP TO 9'-0"	2x4 @16" O.C.(SPF#2)
9'-1" - 10'-4"	2x4 @ 12" O.C. (SPF #2) -OR- 2x6 @ 16" O.C. (SPF #2)
10'-5" - 15'-0"	(2) 2x4 @ 16" O.C. (SPF #2) -OR- 2x6 @ 12" O.C. (SPF #2)
15'-1" - 16'-7"	2x6 @ 12" O.C. (SPF #2) -OR- 2x8 @ 16" O.C. (SPF #2)
16'-8" - 18'-6"	2x8 @ 16" O.C. (SPF #2)
18'-7" - 20'-0"	(2) 2x6 @ 12" O.C. (SPF #2) -OR- 2x8 @ 12" O.C. (SPF #2)

NOTES:
1. DOUBLE STUDS TO BE NAILED TOGETHER WITH 12d COMMON NAILS @ 3" O.C. FROM EACH SIDE, STAGGERED PATTERN.
2. STUD HEIGHTS EXCEEDING 20' SHALL REQUIRE SPECIFIC ENGINEERING.

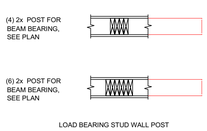

LOAD BEARING STUD WALL POST

LOAD BEARING STUD WALL POST DETAILS

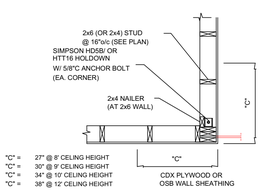

"C" = 27" @ 8' CEILING HEIGHT
"C" = 30" @ 9' CEILING HEIGHT
"C" = 34" @ 10' CEILING HEIGHT
"C" = 38" @ 12' CEILING HEIGHT

WALL SHEATHING AT TYPICAL 90D CORNER

"A" + "B" = "C" = 27" @ 8' CEILING HEIGHT
"A" + "B" = "C" = 30" @ 9' CEILING HEIGHT
"A" + "B" = "C" = 34" @ 10' CEILING HEIGHT
"A" + "B" = "C" = 38" @ 12' CEILING HEIGHT

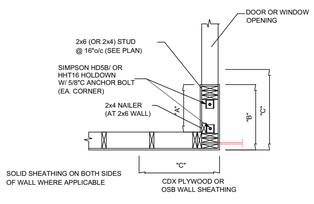

WALL SHEATHING AT 90D CORNER AT WINDOW

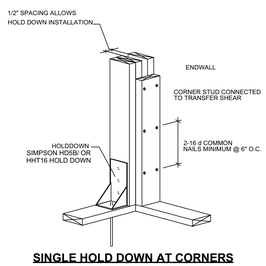

SINGLE HOLD DOWN AT CORNERS
NOT TO SCALE

DOOR AND WINDOW HEADER SCHEDULE: (WALLS 2x6's @ 16" O.C.)

(3) 2x8's W/ (1/2) PLYWOOD FILLERS FOR UP TO 4'-0" OPENINGS
(3) 2x10's W/ (1/2) PLYWOOD FILLERS FOR UP TO 8'-0" OPENINGS
(3) 2x12's W/ (1/2) PLYWOOD FILLERS FOR UP TO 10'-0" OPENINGS

DOOR AND WINDOW HEADER SCHEDULE: (WALLS 2x4's @ 16" O.C.)

(2) 2x8's W/ (1/2) PLYWOOD FILLERS FOR UP TO 4'-0" OPENINGS
(2) 2x10's W/ (1/2) PLYWOOD FILLERS FOR UP TO 8'-0" OPENINGS
(2) 2x12's W/ (1/2) PLYWOOD FILLERS FOR UP TO 10'-0" OPENINGS

THE CEILING / ATTIC JOISTS WILL BE:

2x6's @ 16"o/c UP TO 10' SPAN
2x8's @ 16"o/c UP TO 13'-6" SPAN
2x10's @ 16"o/c UP TO 16' SPAN
2x12's @ 16"o/c UP TO 20' SPAN

THE ROOF RAFTERS WILL BE:

2x6's @ 16"o/c UP TO 8'-0" (UNSHORED) SPAN
2x8's @ 16"o/c UP TO 12'-0" (UNSHORED) SPAN
2x10's @ 16"o/c UP TO 15'-0" (UNSHORED) SPAN
2x12's @ 16"o/c UP TO 18'-0" (UNSHORED) SPAN

THE EXTERIOR WALL STUDS SCHEDULE:

2x4's @ 16" o/c AT THE WALLS WITH THE PLATE HEIGHT UP TO 9'-1
2x6's @ 16" o/c AT THE WALLS WITH THE PLATE HEIGHT UP TO 12'-1
2x8's @ 16" o/c AT THE WALLS WITH THE PLATE HEIGHT UP TO 18'-1

THIS PLAN IS THE PROPERTY OF WILLIAM H. BRANHAM III, P.E. THE PURCHASER OF THIS PLAN IS GRANTED THE RIGHT TO CONSTRUCT A TOTAL OF ONLY ONE PROJECT FROM THIS PLAN. IT IS UNLAWFUL TO REPRODUCE ANY PART OF THIS PLAN EITHER ON PAPER OR ON SITE, WITHOUT THE WRITTEN CONSENT FROM WILLIAM H. BRANHAM III, P.E. CONSTRUCTION OF THIS PLAN IS TO BE IN CONFORMATION WITH ALL LOCAL ORDINANCES AND BLDG. CODES APPLICABLE. CONTRACTOR AND SUB-CONTRACTORS SHOULD CHECK ALL DRAWINGS PRIOR TO CONSTRUCTION.

NO.	DATE	REVISIONS
1		

PREPARED FOR:
Dylan & Amanda Mingard
41 Stock Farm Road
Bluffton, SC 29910

SOUTH CAROLINA REGISTERED PROFESSIONAL ENGINEER No. 16901 WILLIAM H. BRANHAM III

SEAL DATE: 04-30-2025

WILLIAM H. BRANHAM III, P.E.
PO BOX 147
MT. PLEASANT, SC 29465

DRAWN BY: BSC
CHECK BY: WHB
JOB: 6858-177-2025
DATE: 04-30-2025

S105