D-Series Size 0
LED Area Luminaire

Catalog Number
Notes
Type

Hit the Tab key or mouse over the page to see all interactive elements.

Specifications

EPA:	0.44 ft² (0.04 m²)
Length:	26.18" (66.5 cm)
Width:	14.06" (35.7 cm)
Height H1:	2.26" (5.7 cm)
Height H2:	7.46" (18.9 cm)
Weight:	23 lbs (10.4 kg)

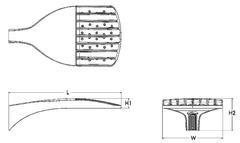

Introduction

The modern styling of the D-Series features a highly refined aesthetic that blends seamlessly with its environment. The D-Series offers the benefits of the latest in LED technology into a high performance, high efficacy, long-life luminaire.

The photometric performance results in sites with excellent uniformity, greater pole spacing and lower power density. D-Series outstanding photometry aids in reducing the number of poles required in area lighting applications, with typical energy savings of 70% and expected service life of over 100,000 hours.

Ordering Information

EXAMPLE: DSX0 LED P6 40K 70CRI T3M MVOLT SPA NLTAIR2 PIRHN DDBXD

DSX0 LED

Series	LEDs	Color temperature [1]	Color Rendering Index [2]	Distribution		Voltage	Mounting
DSX0 LED	**Forward optics** P1 P5 P2 P6 P3 P7 P4 **Rotated optics** P10 [3] P12 [3] P11 [3] P13 [3]	**(this section 70CRI only)** 30K 3000K 40K 4000K 50K 5000K **(this section 80CRI only, extended lead times apply)** 27K 2700K 30K 3000K 35K 3500K 40K 4000K 50K 5000K	70CRI 70CRI 70CRI 80CRI 80CRI 80CRI 80CRI 80CRI	AFR Automotive front row T1S Type I short T2M Type II medium T3M Type III medium T3LG Type III low glare [3] T4M Type IV medium T4LG Type IV low glare [3] TFTM Forward throw medium	T5M Type V medium T5LG Type V low glare T5W Type V wide BLC3 Type III backlight control [3] BLC4 Type IV backlight control [3] LCCO Left corner cutoff [3] RCCO Right corner cutoff [3]	MVOLT (120V-277V) [4] HVOLT (347V-480V) [4 5] XVOLT (277V-480V) [5 6]	**Shipped included** SPA Square pole mounting (A5 drilling, 3.5" min. SQ pole) RPA Round pole mounting (A5 drilling, 3" min. RND pole) SPA5 Square pole mounting (A5 drilling, 5" min. SQ pole) [7] RPA5 Round pole mounting (A5 drilling, 5" min. RND pole) [7] SPA8N Square narrow pole mounting (A5 drilling, 3" min. SQ pole) WBA Wall bracket [8]

Control options		Other options		Finish (required)
Shipped installed NLTAIR2 PIRHN nLight AIR gen 2 enabled with bi-level motion / ambient sensor, 8-40' mounting height, ambient sensor enabled at 28; [9, 10, 16, 19] PIR High/low, motion/ambient sensor, 8-40' mounting height, ambient sensor enabled at 28; [9, 10, 19] PER NEMA twist-lock receptacle only (controls ordered separately) [10] PER5 Five-pin receptacle only (controls ordered separately) [10, 11] PER7 Seven-pin receptacle only (controls ordered separately) [10 12] FAO Field adjustable output [13, 19] BL30 Bi-level switched dimming, 30% [10, 19] BL50 Bi-level switched dimming, 50% [10, 19] DMG 0-10v dimming wires pulled outside fixture (for use with an external control, ordered separately) [19]		**Shipped installed** HS Houseside shield (black finish standard) [20] LWG Left wrapped optics [1] RWG Right wrapped optics [1] CCE Coastal Construction [21] **Shipped separately** BGSR External Glare Shield (reversible, field install required, matches housing finish) BSDB Bird Spikes (field install required)		DDBXD Dark Bronze DBLXD Black DNAXD Natural Aluminum DWHXD White DDBTXD Textured dark bronze DBLBXD Textured black DNATXD Textured natural aluminum DWHGXD Textured white

LITHONIA LIGHTING
COMMERCIAL OUTDOOR

One Lithonia Way • Conyers, Georgia 30012 • Phone: 1-800-705-SERV (7378) • www.lithonia.com
© 2011-2023 Acuity Brands Lighting, Inc. All rights reserved.

DSX0-LE3
Rev. 01/04/23
Page 1 of 9

FIXTURE TYPE 2: DSX0LED-P4-40K-70CRI-T2M
COUNT: 4 FIXTURES

FIXTURE TYPE FT: DSX0LED-P4-70CRI-TFTM
COUNT: 1 FIXTURE

ALL FIXTURES ARE POLE MOUNTED AT 20'-0" ABOVE GRADE

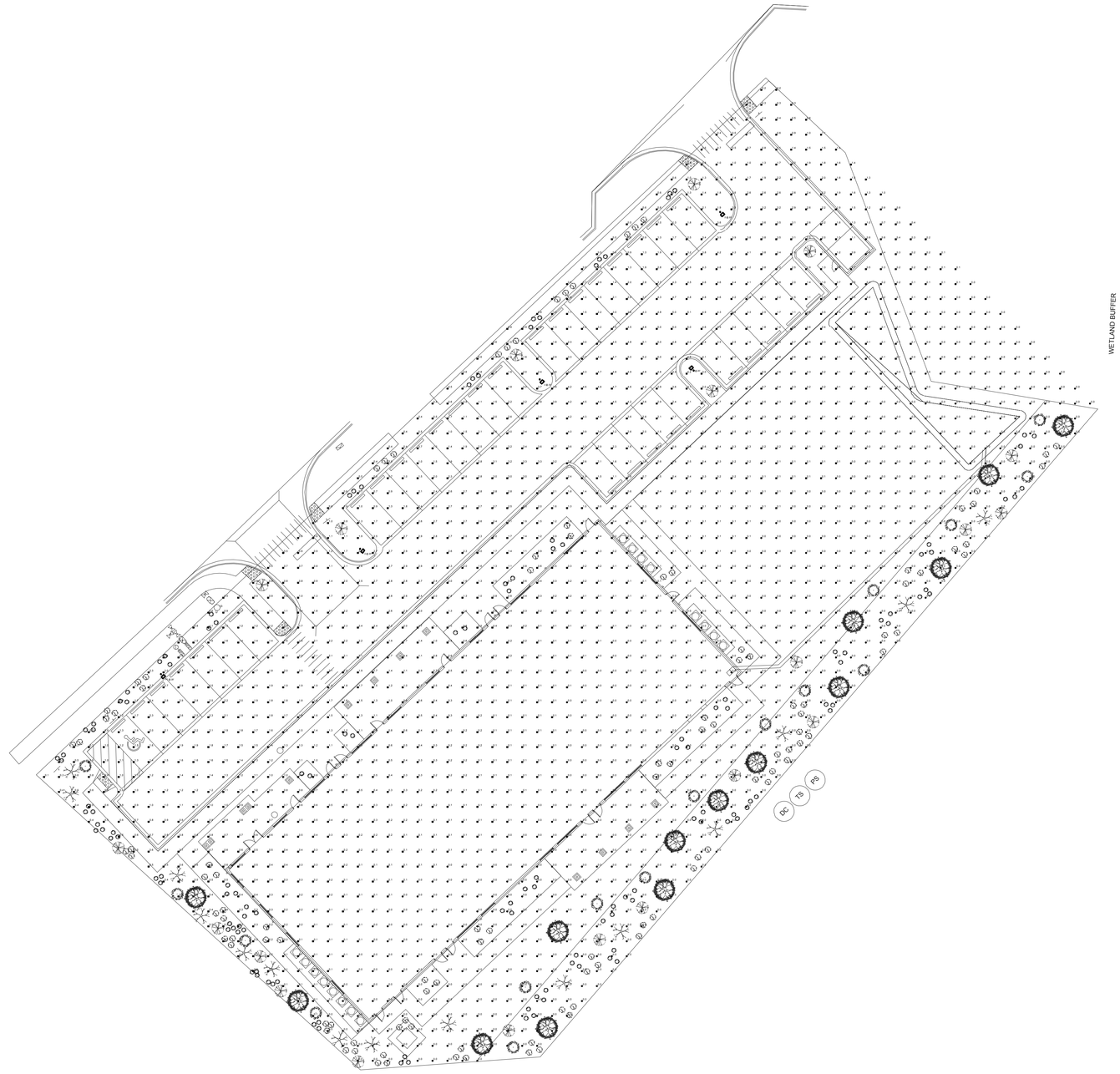

SITE PLAN - PHOTOMETRICS

SCALE: 1" = 20'-0"

N

STATISTICS						
DESCRIPTION	SYMBOL	AVG	MAX	MIN	MAX/MIN	AVG/MIN
PARKING	·	2.4 FC	5.2 FC	0.5 FC	10.4:1	4.8:1
SITE	·	0.8 FC	5.2 FC	0.0 FC	N/A	N/A

DO NOT SCALE PRINTS. USE FIGURED DIMENSIONS. © 2022 FSDG

Project:

Big Blue Marble Academy

Cypress Ridge
Mill Creek Blvd.
Bluffton, South Carolina

Issued for:
COFA Submittal 02/16/2023

Subject:
SITE PLAN - PHOTOMETRICS

Project Owner:

EIGHT
814 Services, LLC
1695 Twelve Mile Road
Suite 100
Berkley, MI 48072

Project Consultants:

FormSurfaces Design Group
10913 Marcello Lane
Whitmore Lake, MI 48189

AE STRUCTURES
Architecturally Engineered Structures, PLLC
Structural Engineering Consultants
www.AEStructures.com
2800 Livernois
Troy, Michigan 48098-6507
Telephone: 248.250.8366
AEStructures@AEStructures.com

CLARK TROMBLEY RANDERS
504 S. Creyts Road, Suite B
Lansing, MI 48917

Job No.
20211019

Sheet No.
SP 100