ALPINE CLINIC ED AND HYBRID OR

FOR

STAR VALLEY HEALTH

ALPINE, WY

SHEET INDEX

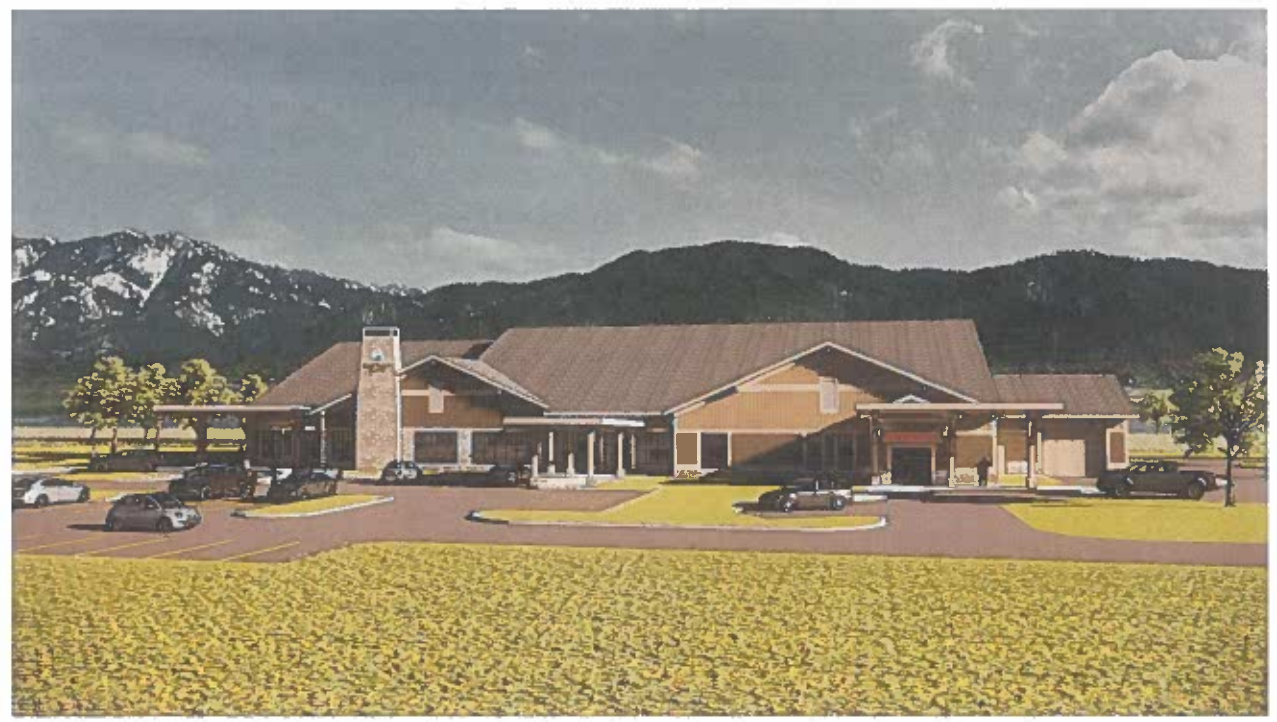

SHEET INDEX-GENERAL

G001	TITLE SHEET
G011	GENERAL INFORMATION
G012	MOUNTING HEIGHTS
G111	FIRST FLOOR LIFE SAFETY PLAN

SHEET INDEX-STRUCTURAL

S001	STRUCTURAL NOTES
S002	STATEMENT OF SPECIAL INSPECTIONS AND TESTS
S101	FOUNDATION PLAN
S112	ROOF FRAMING PLAN
S501	TYPICAL CONCRETE DETAILS
S502	FOUNDATION DETAILS
S511	TYPICAL STEEL DETAILS
S512	STEEL DETAILS
S521	TYPICAL MASONRY DETAILS
S531	WOOD DETAILS
S541	FRAMING AT IMAGING

SHEET INDEX-ARCHITECTURAL

A101	FIRST FLOOR DEMOLITION PLAN
A110	MECHANICAL SPACE
A111	FIRST FLOOR PLAN
A121	ARCHITECTURAL SITE PLAN
A131	FIRST FLOOR REFERENCE AND EQUIPMENT PLAN
A151	FIRST FLOOR REFLECTED CEILING PLAN
A191	ROOF PLAN
A201	EXTERIOR ELEVATIONS
A202	EXTERIOR ELEVATIONS
A203	GLAZING ELEVATIONS
A281	INTERIOR ELEVATIONS - SURGERY
A282	INTERIOR ELEVATIONS - ED & LAB
A311	EXTERIOR WALL SECTIONS
A312	CANOPY SECTIONS
A313	CANOPY SECTIONS
A410	CASEWORK LEGEND
A501	EXTERIOR DETAILS
A502	EXTERIOR DETAILS
A503	EXTERIOR DETAILS
A561	PARTITION TYPES
A562	INTERIOR DETAILS
A563	INTERIOR DETAILS
A564	INTERIOR DETAILS
A565	INTERIOR DETAILS
A566	INTERIOR DETAILS - COLUMN ENCLOSURES
A567	INTERIOR DETAILS - CEILING
A621	DOOR SCHEDULE

SHEET INDEX-INTERIORS

I001	FINISH SCHEDULES AND NOTES
I101	FIRST FLOOR FINISH PLAN
I201	FIRST FLOOR WALL PROTECTION PLAN
I301	FIRST FLOOR PATTERNING PLAN
I401	FIRST FLOOR RENDERED FLOOR PLAN
I501	INTERIOR DETAILS

SHEET INDEX-FIRE PROTECTION

FP101	FIRST FLOOR - FIRE PROTECTION PLAN

SHEET INDEX-PLUMBING

P001	PLUMBING SHEET INDEX & GENERAL NOTES
P002	SEISMIC CONTROLS FOR PLUMBING
P100	BASEMENT - PLUMBING AND FIRE PROTECTION FLOOR PLANS
P101	FIRST FLOOR - PLUMBING UNDERFLOOR PLAN - WASTE, VENT, & STORM
P102	FIRST FLOOR - PLUMBING FLOOR PLAN - WASTE, VENT, & STORM
P201	FIRST FLOOR - PLUMBING FLOOR PLAN - WATER AND FUEL GAS
P301	FIRST FLOOR - PLUMBING MEDICAL GAS

SHEET INDEX-HVAC

M001	MECHANICAL NOTES
M001	MECHANICAL NOTES
M002	SEISMIC CONTROLS FOR HVAC
M101	HVAC PLAN
M101	HVAC FIRST FLOOR PLAN
M102	HVAC PIPING PLAN
M102	HVAC FIRST FLOOR PIPING PLAN
M103	HVAC ROOF BASEMENT PLAN
M103	HVAC ROOF BASEMENT PLAN
M104	HVAC AIR FLOW PLAN
M301	HVAC FIRST FLOOR AIR FLOW PLAN
M401	HVAC FIRE SMOKE DAMPER PLAN
M501	HVAC DETAILS
M501	HVAC DETAILS
M502	HVAC DETAILS
M502	HVAC DETAILS
M503	HVAC DETAILS
M601	HVAC SCHEDULES
M601	HVAC SCHEDULES
M602	HVAC SCHEDULES
M603	HVAC SCHEDULES
M800	CONTROL DETAILS
M801	HVAC CONTROLS
M802	HVAC CONTROLS

SHEET INDEX-ELECTRICAL

E001	ELECTRICAL NOTES
E002	ELECTRICAL SIESMIC REQUIREMENTS
E101	ELECTRICAL LIGHTING PLAN
E102	ELECTRICAL POWER PLAN
E501	ELECTRICAL DETAILS
E601	ELECTRICAL RISER DIAGRAM
E602	EXISTING PANEL SCHEDULES
E603	NEW PANEL SCHEDULES

Wyoming Department of Health

Project No: 2024-065
Reviewed and Accepted
Reviewed By:
Pat Davis, P.E.
Chief, Life Safety & Construction Branch
Date: 09.12.24

ERDMAN

One Erdman Place
Madison, Wisconsin 53717
Phone: (608) 410-0000
FAX: (608) 410-0500

Star Valley Health - Alpine Clinic ED and Hybrid OR

ALPINE, WY

Architectural Services Provided By:
ERDMAN COMPANY
Architect of Record
Daniel Delk
License #: C-3701

Engineering Services Provided By:
ERDMAN COMPANY
Professional Engineer
Structure
Andrew S. Hoffman
License #: 16179

Professional Engineer
Mechanical
Michael S. Meteyer
License #: 8953

Professional Engineer
Plumbing
Eric Haines
License #: 18748

Professional Engineer
Electrical
Randy D. Wilde
License #: 14207

Contractor Services Provided By:
ERDMAN COMPANY

Consultant Services Provided By:

No.	Description	Date
3	[illegible]	08-26-2024
2	FOR CONSTRUCTION	10-04-2023
1	IFC SET	09-08-2023

Document Release

LICENSED ARCHITECT DANIEL W. DELK C-3701 STATE OF WYOMING

Sheet Name
TITLE SHEET

Drn JARANDA Chk FOUNR

Sheet Number
G001

JOB # 658421

© 2023 ERDMAN COMPANY

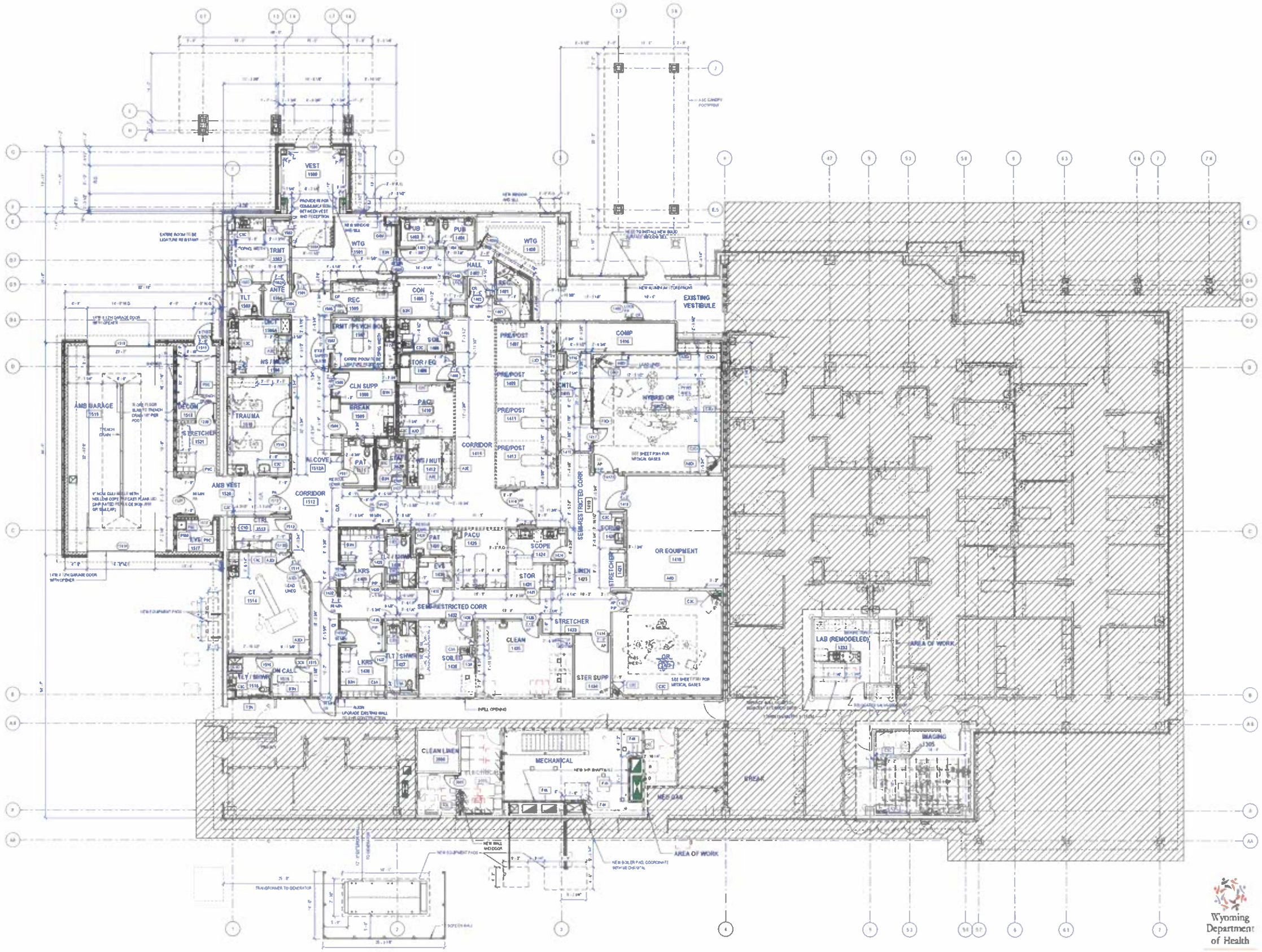

1 FIRST FLOOR OVERALL PLAN

SCALE 1/8" = 1'-0"

FLOOR PLAN GENERAL NOTES

1. PROVIDE BLOCKING/STRAPPING AS REQUIRED AT WALL MOUNTED EQUIPMENT. COORDINATE WITH MANUFACTURER. BLOCKING TO BE FIRE RETARDANT LUMBER.
2. DIMENSIONS ARE FROM FACE OF STUD TO FACE OF STUD UNLESS NOTED.
3. INTERIOR PARTITIONS ARE TO BE TYPE A1B UNLESS NOTED.
4. CEILING ENCLOSURE PARTITIONS TO BE C1C UNLESS NOTED.
5. EQUIPMENT SIZES MAY VARY BY MANUFACTURER. VERIFY SIZES PRIOR TO INSTALLATION.
6. PROVIDE REQUIRED SUPPORT FOR CEILING MOUNTED EQUIPMENT. COORDINATE WITH MANUFACTURER AND STRUCTURAL.
7. WALL PENETRATIONS TO COMPLY WITH RATED WALL ASSEMBLY REGULATIONS. SEE FLOOR PLANS AND DETAILS FOR WALL TYPES AND LOCATIONS.
8. COORDINATE LOCATIONS AND HEIGHTS OF RECEPTACLES WITH ELECTRICAL.
9. COORDINATE LOCATIONS OF FIXTURES, MEDICAL GAS OUTLETS, ETC. WITH PLUMBING.
10. DRAIN LOCATIONS TO BE DEPRESSED 3" BELOW TYPICAL SLAB ELEVATION. SLAB TO SLOPE TOWARDS DRAIN AT 1/8" (0.104") PER FOOT UNO.
11. REFER TO SHEETS DETAILING ACOUSTIC ASSEMBLIES AND PROVIDE REQUIRED PROTOTYPES AS REQUIRED TO MEET NFPA CODE MANDATED "ETC" RATINGS.
12. PLACE INTERIOR GYPSUM CONTROL JOINTS PER ASTM C840. ALIGN JOINTS WITH THE OUTSIDE EDGE OF A DOOR AND UNO.
13. REFER TO OWNER'S FFE BIDDER REPORT FOR SPECIFIC SHIELDING REQUIREMENTS FOR OWNER'S IMAGING EQUIPMENT.
14. RADIUS CORNERS (1" UNO) AT EXPOSED COUNTERTOP EDGES.
15. SEE WALL PROTECTION PLANS FOR CORNER GUARD AND SHEET PROTECTION LOCATIONS.
16. COORDINATE COUNTERTOP OR CABINET LOCATIONS AT ALL KNEE SPACES.
17. DOOR OPENING TO BE 4" FROM ADJACENT WALL UNO.

FLOOR PLAN LEGEND

FEC1 — FIRE EXTINGUISHER CABINET NON-RATED

CONTROL JOINT

11 / 3262 — 145.25 NW

3 / 3262 — 187.25 NE

RATED PARTITION TYPE LEGEND

- 1 HR FIRE BARRIER - SMOKE BARRIER
- 1 HR FIRE BARRIER
- 1 HR FIRE BARRIER - SMOKE BARRIER
- 1 HR FIRE BARRIER
- 1 HR SMOKE BARRIER
- 1 HR SMOKE PARTITION

Project No 2024-065
Reviewed and Accepted
Reviewed By
Pat Davis P.E.
Chief, Life Safety & Construction Bureau
Date 09 12 24

Wyoming Department of Health

ERDMAN

One Erdman Place
Madison, Wisconsin 53713
Phone: (608) 410-8000
FAX: (608) 216-8500

Star Valley Health - Alpine Clinic ED and Hybrid OR

ALPINE, WY

Architectural Services Provided By:
ERDMAN COMPANY
Architect of Record
Daniel Delk
License #: C-3701

Engineering Services Provided By:
ERDMAN COMPANY
Professional Engineer
Structure
Andrew S. Hoffman
License #: 16179

Professional Engineer
Mechanical
Michael S. Meteyer
License #: 8953

Professional Engineer
Plumbing
Eric Haines
License #: 18748

Professional Engineer
Electrical
Randy D. Wilde
License #: 14207

Contractor Services Provided By:
ERDMAN COMPANY

Consultant Services Provided By:

No.	Description	Date
10	CB005	08-05-2024
9	CB004	07-08-2024
8	CB003	05-03-2024
7	CB002	03-15-2024
6	CB001	02-26-2024
5	FOR CONSTRUCTION	10-04-2023
4	IBC SET	08-28-2023
3	IDGH PRELIMINARY REVIEW	06-03-2023
2	FINAL DESIGN DEVELOPMENT	05-23-2023
1	SCHEMATIC ESTIMATE	03-30-2023

Document Release

LICENSED ARCHITECT DANIEL W. DELK C-3701 STATE OF WYOMING

Sheet Name
FIRST FLOOR PLAN

DM/ARANDA C/N-TDUNR

Sheet Number
A111

JOB # 658421

© 2023 ERDMAN COMPANY

REFERENCE AND ACCESSORY PLAN GENERAL NOTES

1. PROVIDE METAL BLOCKING / STUDDING AS REQUIRED AT ALL WALL MOUNTED EQUIPMENT. COORDINATE WITH MANUFACTURER.
2. PROVIDE REQUIRED SUPPORT FOR ALL CEILING MOUNTED EQUIPMENT COORDINATE WITH MANUFACTURER AND STRUCTURAL.
3. EQUIPMENT SIZES MAY VARY BY MANUFACTURER. VERIFY ALL SIZES PRIOR TO INSTALLATION.
4. COORDINATE LOCATIONS AND HEIGHTS OF RECEPTACLES WITH ELECTRICAL.
5. DRAIN LOCATIONS TO BE DETERMINED BELOW TYPICAL SLAB ELEVATION. SLAB TO SLOPE TOWARDS DRAIN. SEE PLAN BELOW.

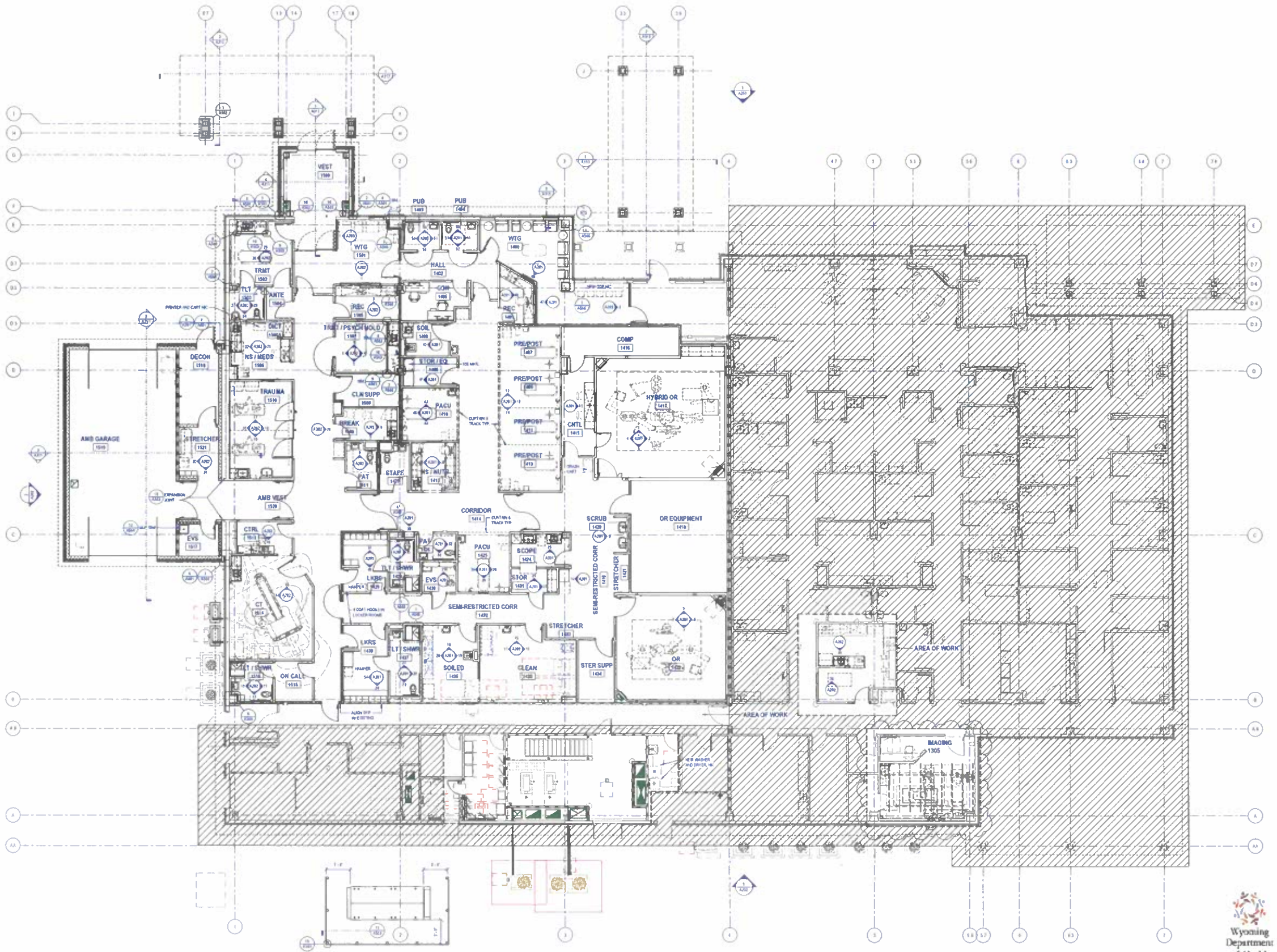

1 FIRST FLOOR REFERENCE AND EQUIPMENT PLAN

SCALE: 1/8" = 1'-0"

Wyoming Department of Health

Project No. 2024-065
Reviewed and Accepted
Reviewed By
Date 09 12 24

ERDMAN

One Erdman Place
Madison, Wisconsin 53717
Phone: (608) 836-8000
FAX: (608) 836-8000

Star Valley Health - Alpine Clinic ED and Hybrid OR

ALPINE, WY

Architectural Services Provided By:
ERDMAN COMPANY
Architect of Record
Daniel Delk
License #: C-3701

Engineering Services Provided By:
ERDMAN COMPANY
Professional Engineer
Structure
Andrew S. Hoffman
License #: 15179

Professional Engineer
Mechanical
Michael S. Meteyer
License #: 8953

Professional Engineer
Plumbing
Eric Haines
License #: 18748

Professional Engineer
Electrical
Randy D. Wilde
License #: 14207

Contractor Services Provided By:
ERDMAN COMPANY

Consultant Services Provided By:

No.	Description	Date
9	CD005	09-05-2024
8	CD004	07-08-2024
7	CD003	05-03-2024
6	CD002	03-11-2024
5	CD001	02-26-2024
4	FOR CONSTRUCTION	12-06-2023
3	BID SET	08-08-2023
2	30% PRELIMINARY REVIEW	06-02-2023
1	FINAL DESIGN DEVELOPMENT	04-21-2023

Document Release

LICENSED ARCHITECT DANIEL W. DELK C-3701 STATE OF WYOMING

Sheet Name
FIRST FLOOR REFERENCE AND EQUIPMENT PLAN

DH MIRANDA CHK TOLNER

Sheet Number
A131

JOB # 698421

© 2023 ERDMAN COMPANY

CEILING FINISH LEGEND

ES	EXPOSED STRUCTURE
GYP	GYPSUM BOARD
ACT1	ACOUSTICAL CEILING (SQUARE LAY-IN TILE - 24" x 24")
ACT2	ACOUSTICAL CEILING (CLEAN ROBBLAN IN TILE - 24" x 24") W/ HOLD DOWN CLIPS
ACT3	ACOUSTICAL CEILING (RECTANGULAR LAY-IN TILE - 24" x 48")
	SURFACE LIGHT FIXTURE

CEILING PLAN GENERAL NOTES

1. ALL MATERIALS PROVIDED BY GENERAL CONTRACTOR (GC).
2. CEILING HEIGHT TO BE 9'-0" U.N.O. CEILING FINISH TO BE ACT1 U.N.O.
3. CEILING TILES TO BE CENTERED IN ROOM U.N.O.
4. ALL CEILING GRID MAIN RUNNERS ARE TO RUN PARALLEL OR PERPENDICULAR TO JOIST BEARING OR MAIN STRUCTURAL MEMBERS. SUSPENDED CEILING GRID MAIN RUNNERS ARE TO RUN PERPENDICULAR TO THE CORRIDOR WALLS WHERE THE CORRIDOR WALLS ARE 8'-0" WIDE OR LESS.
5. ALL CEILING PANELS TO BE INSTALLED IN THE SAME DIRECTION AS INDICATED BY AN ARROW OR A GROOVE ON THE BACK SIDE OF THE PANEL.

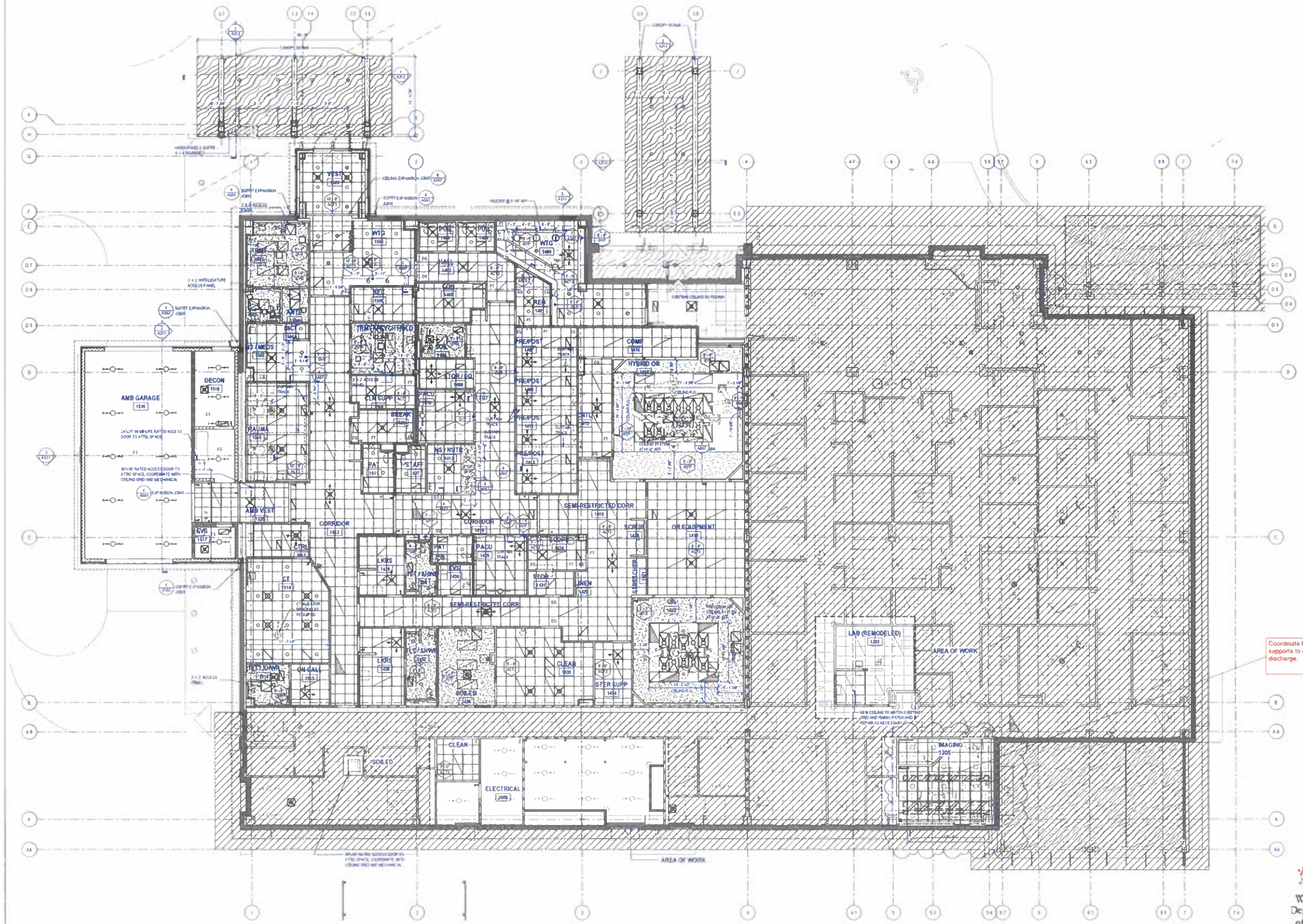

1 FIRST FLOOR REFLECTED CEILING PLAN

SCALE: 1/8" = 1'-0"

Project No. 2024-065
Reviewed and Accepted
Reviewed By
Date 09 12 24

Wyoming Department of Health

ERDMAN

One Erdman Place
Madison, Wisconsin 53717
Phone (608) 410-8000
FAX (608) 410-8909

Star Valley Health - Alpine Clinic ED and Hybrid OR

ALPINE, WY

Architectural Services Provided By:
ERDMAN COMPANY
Architect of Record
Daniel Delk
License #: C-3701

Engineering Services Provided By:
ERDMAN COMPANY
Professional Engineer
Structure
Andrew S. Heffman
License #: 16179

Professional Engineer
Mechanical
Michael S. Meteyer
License #: 8963

Professional Engineer
Plumbing
Eric Haines
License #: 18748

Professional Engineer
Electrical
Randy D. Wilde
License #: 14267

Contractor Services Provided By:
ERDMAN COMPANY

Consultant Services Provided By:

No.	Description	Date
8	CD100	08-08-2024
7	CD90	05-03-2024
6	CD50	03-15-2024
5	CD01	02-26-2024
4	FOR CONSTRUCTION	10-04-2023
3	BID SET	09-06-2023
2	IGCH PRELIMINARY REVIEW	06-03-2023
1	FINAL DESIGN DEVELOPMENT	06-23-2023

Document Release

LICENSED ARCHITECT DANIEL W. DELK C-3701 STATE OF WYOMING

Sheet Name
FIRST FLOOR REFLECTED CEILING PLAN

CHI MARANDA CHI TOUHR

Sheet Number
A151

JOB # 658421

© 2023 ERDMAN COMPANY

Verify that adequate seismic restraint is provide in accordance with the International Building Code.

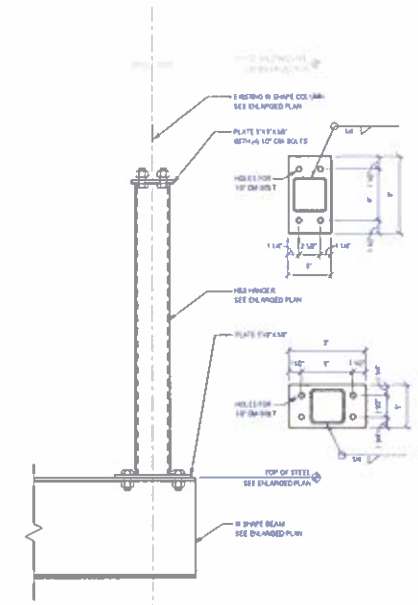

3 SECTION AT HANGER

SCALE 1 1/2" = 1'-0"

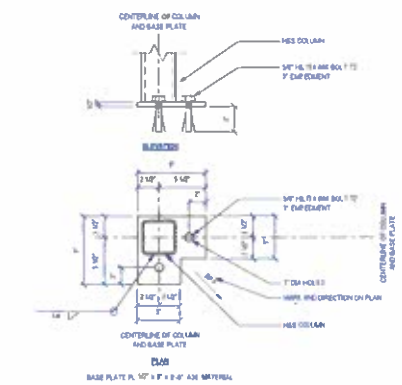

PLAN

BASE PLATE PL 1/2" x 8" x 8" A36 MATERIAL

2 CB-4 COLUMN BASE PLATE - HSS COLUMNS AT CORNER

SCALE 1 1/2" = 1'-0"

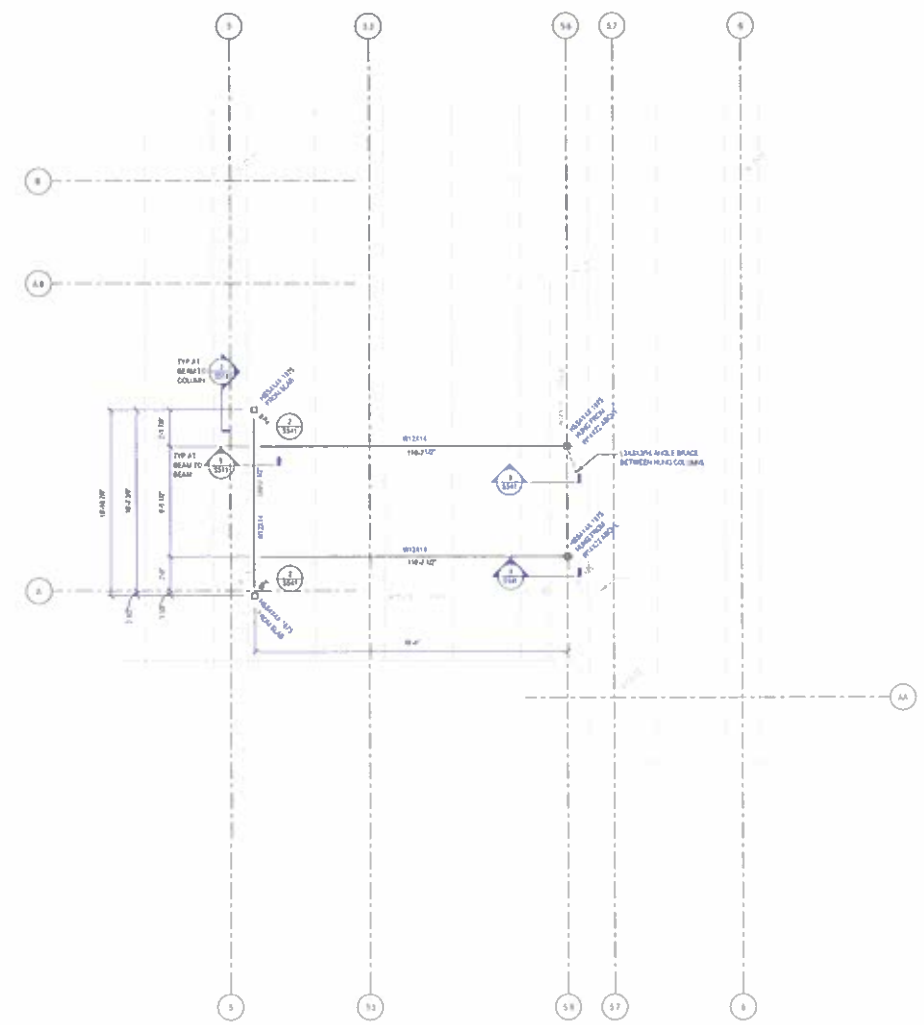

1 ENLARGED FRAMING PLAN

SCALE 1/8" = 1'-0"

Wyoming Department of Health

Project No: 2024-065
Reviewed and Accepted
Reviewed By
Pat Davis, P.E.
Chief, Life Safety & Construction Branch
Date 09 12 24

ERDMAN

One Erdman Place
Bordman, Wisconsin 53717
Phone: (888) 410-0000
FAX: (888) 410-0000

Star Valley Health - Alpine Clinic ED and Hybrid OR

ALPINE, WY

Architectural Services Provided By:
ERDMAN COMPANY
Architect of Record
Daniel Delk
License #: C-3701

Engineering Services Provided By:
ERDMAN COMPANY
Professional Engineer
Structure
Andrew S. Hoffman
License #: 16179

Professional Engineer
Mechanical
Michael S. Meteyer
License #: 8953

Professional Engineer
Plumbing
Eric Haines
License #: 18748

Professional Engineer
Electrical
Randy D. Wilde
License #: 14207

Contractor Services Provided By:
ERDMAN COMPANY

Consultant Services Provided By:

No.	Description	Date
1	CB005	06-05-2024

Document Release

Sheet Name
FRAMING AT IMAGING

Dm ZANDER Chk HOFFMAN

Sheet Number
S541

JOB # 658421

© 2023 ERDMAN COMPANY

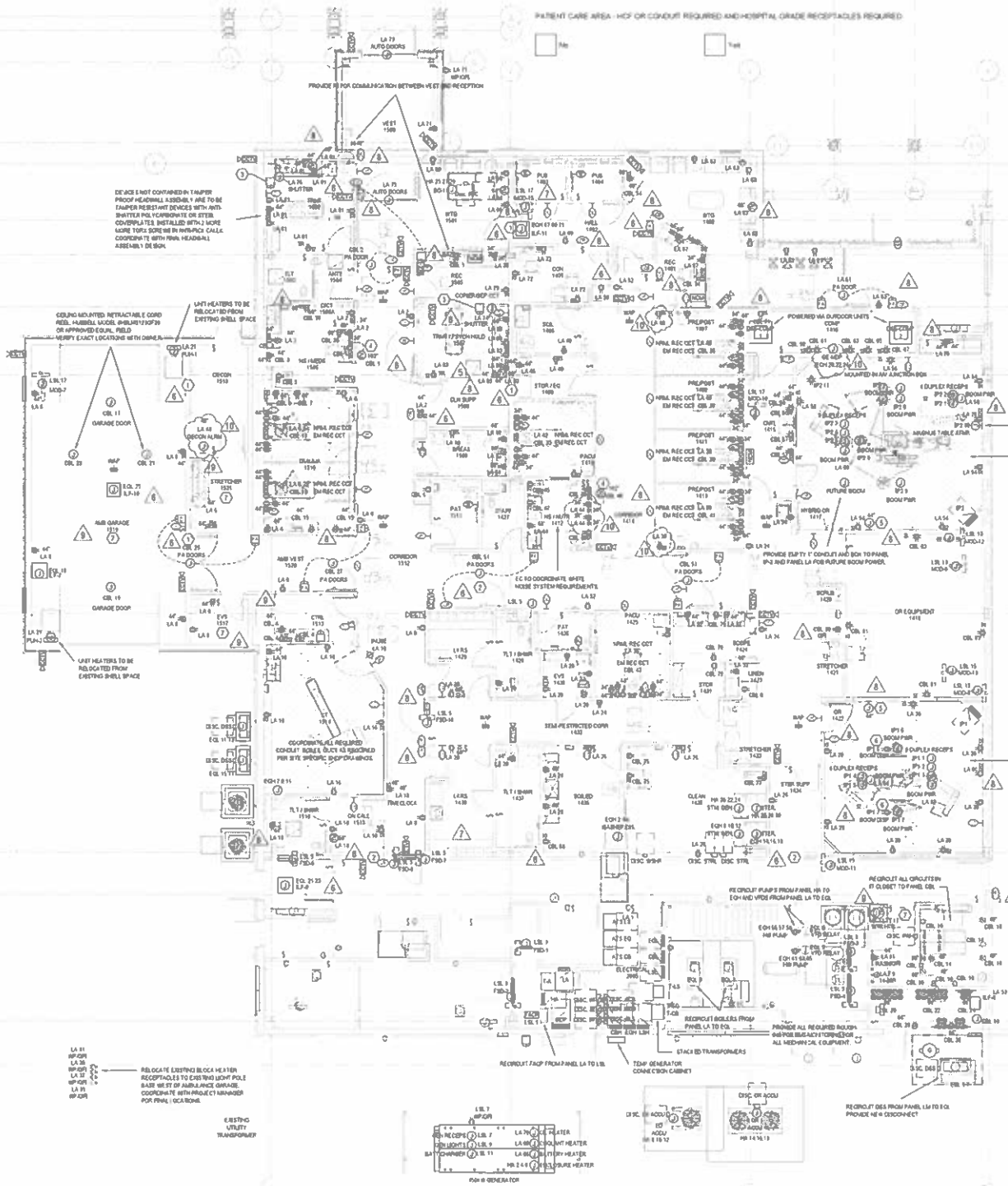

1 ELECTRICAL POWER PLAN - ED/OR

SCALE 1/8" = 1'-0"

2 ELECTRICAL POWER PLAN - LAB

SCALE 1/8" = 1'-0"

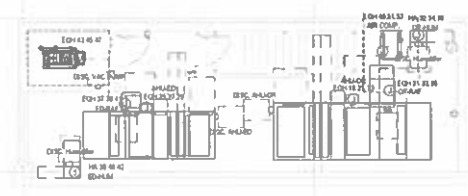

3 BASEMENT POWER PLAN

SCALE 1/8" = 1'-0"

5 THESE PLANS HAVE BEEN DESIGNED IN COMPLIANCE WITH THE MOST RECENTLY ADOPTED CODE. ALL WORK SHALL BE IN ACCORDANCE WITH CURRENTLY ADOPTED CODES INCLUDING THE 2023 VERSION OF THE NATIONAL ELECTRICAL CODE.

ELECTRICAL RECEPTACLE POWER PLAN NOTE 1

1. Communication outlets and systems roughins shown on this drawing are duplicates from the low voltage drawings, shown here for coordination and clarity only. Install devices per low voltage drawings. Do not duplicate. Coordinate all discrepancies with Electrical Engineer or Project Manager / Superintendent. TYPICAL FOR PROJECT.
2. Light switches shown on this plan are a duplication of those indicated on the lighting plan, shown here for coordination purposes.
3. All receptacles located in corridors shall be GFCI protected to ensure the safety of the construction employees and for ventilation units receptacles.
4. All receptacles located within 6 feet of the outside edge of a sink shall be GFCI protected per the NEC.
5. EC shall provide GFCI receptacles installed within 25 feet of all heating, air-conditioning and refrigeration equipment. Equipment may share receptacles where receptacle placement permits. If already have not been specified on drawings, EC to allow for additional circuits or feed and coordinate specific details to be stated with Project Electrical Engineer.
6. Coordinate of electrical distribution equipment indicate required working clearance.
7. Telephone/Data access entrance requirements and locations to be field verified by IT with ground drawings and Client's service provider. For building purposes assume a minimum of two conduits of conduits with pull string and two quad receptacles, each quad on an isolated circuit.
8. Field coordinate locations of all HVAC and boiler control panels, and building management system equipment when applicable providing 120 volt power and communication roughins at each location.
9. Field coordinate locations of HVAC control transformers providing 120 volt or 277 volt power at each location.
10. To verify all fixed features and controls (i.e. power assist automatic doors door actuators and hardware, fire alarm interfaces, delayed egress doors, doors with electromagnetic daggers, etc.) with architectural drawings, schedules and Builder + Project Material Specified. EC to install all required door roughins per appropriate electrical details.
11. 3-Ply cross connects, wiring and accessory devices are to be supplied and installed by the 3M or manufacturer supplied wire drop drawings. 3-Ply cross connects to be installed in separate electrical box, see specifications and electrical new diagrams on sheet E601.
12. Emergency lighting and exit equipment downstream with shunt trip shall utilize lighting circuit ahead of any lighting control devices for shunt trip power source.
13. Rooms designated as patient care areas require redundant grounding per NEC 517.19.
14. EC to provide and install any required relays as shown on the HVAC drawings.
15. These drawings were prepared utilizing the latest available information from the Owner and Equipment Suppliers at the time of preparation. In some cases this information was partially incomplete and is subject to change. EC shall verify all equipment sizes and power requirements for equipment supplied by others. Upon discovery of any discrepancies between these drawings and the actual equipment supplied or vendor drawings, the EC shall notify either the engineer and/or project superintendent for resolution and direction.

6 KEYNOTE LEGEND

Tag	KEYNOTE TEXT
1	PROVIDE 1" 4" CONDUIT CHASE IN FURRUN AT SPACE THROUGH-FIRE-RATED WALL WITH APPROVED PROVISIONS TO PROVIDE 1 HOUR FIRE RATING.
2	PROVIDE 1" 4" CONDUIT CHASE IN FURRUN SPACE THROUGH FIRE RATED WALL WITH APPROVED PROVISIONS TO PROVIDE 1 HOUR FIRE RATING.
3	PLUSH MOUNT PUSH BUTTON PROVIDED WITH SHUTTER.
4	PORTA CATH FOR TV TO BE LOCATED IN THE SLOPE OVER THE DESK. PROVIDE A 3/4" CONDUIT FROM THE TV BOX TO 1/2" DATA BOX UNDER THE DESK.
5	ROUGH-IN FOR BOOM CONTROLLER. COORDINATE ROUGH-IN REQUIREMENTS WITH EQUIPMENT INSTALLATION DOCUMENTATION.
6	RECEPTACLE FOR BOOM MOUNTED DISPLAY LOCATED ABOVE BOOM PLATE.
7	ALL NEW ELECTRICAL DEVICES AND CONDUIT TO BE SURFACE MOUNTED IN THE BOOM.
8	COORDINATE ALL NEW ROUGH-IN REQUIREMENTS WITH ANY SHOP DRAWINGS. ANY DISCREPANCIES WITH EXISTING CONDITIONS TO BE COORDINATED WITH LARGE MANUFACTURER PROJECT MANAGER.
9	RELOCATE EXISTING LIGHTING WITH NEW CEILING GRID AS SHOWN IN ARCHITECTURAL CEILING PLANS.
10	EXISTING PHILIPS LIGHT. EC TO REUSE EXISTING CONDUIT, ACCESSORIES AS REUSABLE. PROVIDE NEW WIRES AND NODE SCHEMES AS NEEDED TO ACHIEVE FUNCTIONALITY AS SHOWN IN NEW SHOP DRAWINGS.

ERDMAN

One Erdman Place
Madison, Wisconsin 53717
Phone: (608) 410-8000
FAX: (608) 410-8000

Star Valley Health - Alpine Clinic ED and Hybrid OR

ALPINE, WY

Architectural Services Provided By:
ERDMAN COMPANY
Architect of Record
Daniel Delk
License #: C-3701

Engineering Services Provided By:
ERDMAN COMPANY
Professional Engineer
Structure
Andrew S. Hoffman
License #: 16179

Professional Engineer
Mechanical
Michael S. Meteyer
License #: 6953

Professional Engineer
Plumbing
Eric Haines
License #: 18748

Professional Engineer
Electrical
Randy D. Wilde
License #: 14207

Contractor Services Provided By:
ERDMAN COMPANY

Consultant Services Provided By:

No.	Description	Date
10	CD005	08-05-2024
9	CD004	07-08-2024
8	CD003	05-03-2024
7	CD002	03-15-2024
6	CD001	02-26-2024
5	ELECTRICAL RESUBMITTAL	10-13-2023
4	FOR CONSTRUCTION	10-04-2023
3	90% SET	09-06-2023
2	CDH PRELIMINARY REVIEW	06-13-2023
1	FINAL DESIGN DEVELOPMENT	05-12-2023

Document Release

PROFESSIONAL ENGINEER RANDY D. WILDE 14207 WYOMING

Sheet Name
ELECTRICAL POWER PLAN

Dr: JN ALSH Ck: RW/DE

Sheet Number
E102

JOB # 658421

Electrical drawings not reviewed by HLS. Proof of plan acceptance by WY DFPES must be provided to HLS prior to authorization to proceed with construction.

© 2023 ERDMAN COMPANY

E - DISCONNECT SCHEDULE

DISCONNECT NUMBER	SERVES	AMPS & POLES	VOLTAGE	NEMA ENCLOSURE	CIRCUIT BREAKER FLUSH/SURFACE	FUSED SWITCH	MANUAL MOTOR STARTER FS	HORSEPOWER	CLASS R FUSE KIT	AUX INTERLOCKS	GROUND KIT	NEUTRAL KIT	CIRCUIT BREAKER AIC	CIRCUIT BREAKER OPTION	SQUARE D SAFETY SWITCH MODEL NO.	BUSSMANN FUSE	SQUARE D CIRCUIT BREAKER ENCLOSURE NO.	SQUARE D BREAKER MODEL NO.	COUNT
DISC. #1	TRANS SUPPRESSOR	30A/3P	480 V	NEMA 1	FLUSH								18 k				[illegible]	[illegible]	1
DISC. [illegible]	X-RAY	60A/3P	480 V	NEMA 1	FLUSH								14 k	SHUNT TRIP			[illegible]	[illegible]	1
DISC. #CB		[illegible]A/3P	480 V	NEMA 1	SURFACE								42 k				[illegible]	[illegible]	1
DISC. #EO		[illegible]A/3P	480 V	NEMA 1	SURFACE								42 k				[illegible]	[illegible]	1
DISC. #F-CB		200A/3P	[illegible] V	NEMA 1		Yes			Yes	No	No	No			[illegible]	3 [illegible]			1
DISC. #F-EO		200A/3P	[illegible] V	NEMA 1		Yes			Yes	No	No	No			[illegible]	3 [illegible]			1
DISC. #F-LS		200A/3P	[illegible] V	NEMA 1		Yes			Yes	No	No	No			[illegible]	3 [illegible]			1
DISC. #LS		60A/3P	480 V	NEMA 1	SURFACE								42 k				[illegible]	[illegible]	1
DISC. [illegible]		30A/3P	[illegible] V	NEMA 1						No	No	No			[illegible]				1
DISC. AHU-ED		30A/3P	[illegible] V	NEMA 1						No	No	No			[illegible]				1
DISC. AHU-OR		100A/3P	[illegible] V	NEMA 1						No	No	No			[illegible]				1
DISC. DSS		30A/3P	[illegible] V	NEMA 3R						No	No	No			[illegible]				2
DISC. ED ACCU		30A/3P	[illegible] V	NEMA 3R						No	No	No			[illegible]				1
DISC. Humidifier		60A/3P	[illegible] V	NEMA 1						No	No	No			[illegible]				2
DISC. OR ACCU		100A/3P	[illegible] V	NEMA 3R						No	No	No			[illegible]				1
DISC. STRL		100A/3P	[illegible] V	NEMA 1						No	No	No			[illegible]				2
DISC. VAC PUMP		30A/3P	[illegible] V	NEMA 1						No	No	No			[illegible]				1
DISC. WSHR		30A/3P	[illegible] V	NEMA 1						No	No	No			[illegible]				1

EQUIPMENT SHOWN IN HALFTONE IS EXISTING TO REMAIN

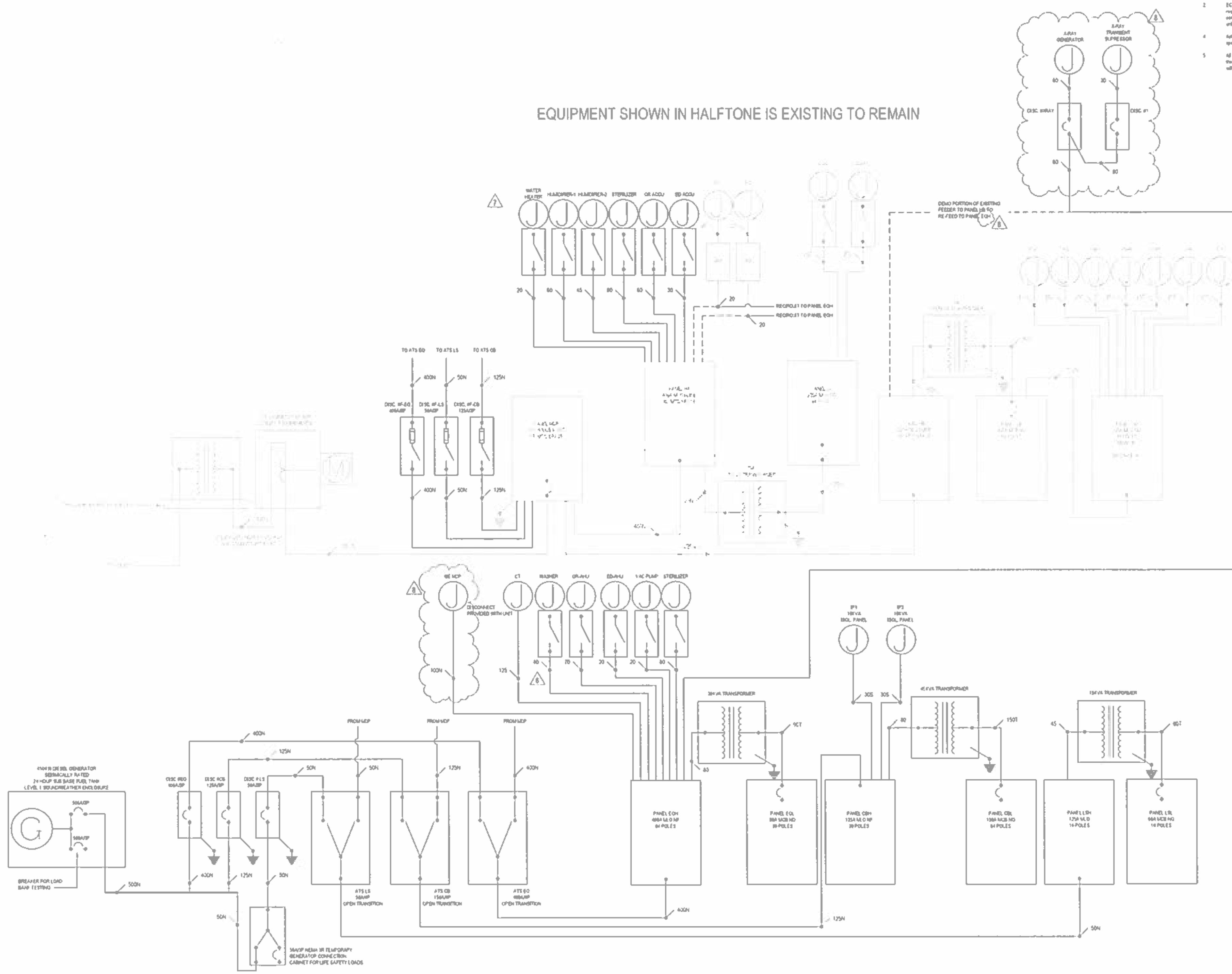

ELECTRICAL RISER DIAGRAM NOTES
1. EC shall coordinate with Utility Company and provide metering equipment per Utility requirements.
2. EC shall coordinate electrical primary, secondary, and transformer pad requirements with Utility company. All conduits, conductors, pad(s), and other components as required by the Utility Company shall be provided by the EC unless the project manager indicates the site contractor will be providing.
4. Indicates [illegible] wiring or device to be installed in [illegible] per specifications.
5. All equipment shown solid on the riser diagram is new and shall be supplied by the [illegible] Supplier. All equipment shown dashed or [illegible] is existing and will remain in service.

THESE PLANS HAVE BEEN DESIGNED IN COMPLIANCE WITH THE MOST RECENTLY ADOPTED CODES. ALL WORK SHALL BE IN ACCORDANCE WITH CURRENTLY ADOPTED CODES INCLUDING THE 2023 VERSION OF THE NATIONAL ELECTRICAL CODE.

E - COPPER FEEDER SCHEDULE

FEEDER NUMBER	CONDUIT QTY & SIZE	PHASE COND QTY & SIZE	NEUTRAL COND QTY & SIZE	GND COND QTY & SIZE
3 PHASE WITH NEUTRAL				
2000N	[illegible] @ 3.5"	[illegible] MCM CU	[illegible] MCM CU	[illegible] MCM CU
2500N	[illegible] @ 3.5"	[illegible] MCM CU	[illegible] MCM CU	[illegible] MCM CU
2000N	[illegible] @ 3.5"	[illegible] MCM CU	[illegible] MCM CU	[illegible] MCM CU
1600N	[illegible] @ 3.5"	[illegible] MCM CU	[illegible] MCM CU	[illegible] AWG CU
1200N	[illegible] @ 3"	[illegible] MCM CU	[illegible] MCM CU	[illegible] AWG CU
1000N	[illegible] @ 3.5"	[illegible] MCM CU	[illegible] MCM CU	[illegible] AWG CU
800N	[illegible] @ 3.5"	[illegible] MCM CU	[illegible] MCM CU	[illegible] AWG CU
600N	[illegible] @ 3"	[illegible] MCM CU	[illegible] MCM CU	[illegible] AWG CU
500N	[illegible] @ 2.5"	[illegible] MCM CU	[illegible] MCM CU	[illegible] AWG CU
400N	[illegible] @ 3.5"	[illegible] MCM CU	[illegible] MCM CU	[illegible] AWG CU
350N	1 @ 3.5"	[illegible] MCM CU	[illegible] MCM CU	[illegible] AWG CU
300N	1 @ 3"	[illegible] MCM CU	[illegible] MCM CU	[illegible] AWG CU
250N	1 @ 2.5"	[illegible] MCM CU	[illegible] MCM CU	[illegible] AWG CU
225N	1 @ 2.5"	[illegible] AWG CU	[illegible] AWG CU	[illegible] AWG CU
200N	1 @ 2"	[illegible] AWG CU	[illegible] AWG CU	[illegible] AWG CU
175N	1 @ 2"	[illegible] AWG CU	[illegible] AWG CU	[illegible] AWG CU
150N	1 @ 2"	[illegible] AWG CU	[illegible] AWG CU	[illegible] AWG CU
125N	1 @ 1.5"	[illegible] AWG CU	[illegible] AWG CU	[illegible] AWG CU
110N	1 @ 1.25"	[illegible] AWG CU	[illegible] AWG CU	[illegible] AWG CU
100N	1 @ 1.25"	[illegible] AWG CU	[illegible] AWG CU	[illegible] AWG CU
90N	1 @ 1.25"	[illegible] AWG CU	[illegible] AWG CU	[illegible] AWG CU
80N	1 @ 1.25"	[illegible] AWG CU	[illegible] AWG CU	[illegible] AWG CU
70N	1 @ 1.25"	[illegible] AWG CU	[illegible] AWG CU	[illegible] AWG CU
60N	1 @ 1"	[illegible] AWG CU	[illegible] AWG CU	[illegible] AWG CU
50N	1 @ 0.75"	[illegible] AWG CU	[illegible] AWG CU	[illegible] AWG CU
40N	1 @ 0.75"	[illegible] AWG CU	[illegible] AWG CU	[illegible] AWG CU
30N	1 @ 0.5"	[illegible] AWG CU	[illegible] AWG CU	[illegible] AWG CU
3 PHASE NO NEUTRAL				
[illegible]	[illegible] @ 3"	[illegible] MCM CU	(NONE)	[illegible] AWG CU
[illegible]	[illegible] @ 3.5"	[illegible] MCM CU	(NONE)	[illegible] AWG CU
[illegible]	[illegible] @ 3"	[illegible] MCM CU	(NONE)	[illegible] AWG CU
[illegible]	[illegible] @ 3"	[illegible] MCM CU	(NONE)	[illegible] AWG CU
[illegible]	[illegible] @ 3"	[illegible] MCM CU	(NONE)	[illegible] AWG CU
[illegible]	[illegible] @ 3.5"	[illegible] MCM CU	(NONE)	[illegible] AWG CU
[illegible]	[illegible] @ 3.5"	[illegible] MCM CU	(NONE)	[illegible] AWG CU
[illegible]	[illegible] @ 3"	[illegible] AWG CU	(NONE)	[illegible] AWG CU
[illegible]	1 @ 3"	[illegible] MCM CU	(NONE)	[illegible] AWG CU
[illegible]	1 @ 3"	[illegible] MCM CU	(NONE)	[illegible] AWG CU
[illegible]	1 @ 3.5"	[illegible] MCM CU	(NONE)	[illegible] AWG CU
250	1 @ 2"	[illegible] MCM CU	(NONE)	[illegible] AWG CU
225	1 @ 2"	[illegible] AWG CU	(NONE)	[illegible] AWG CU
200	1 @ 2"	[illegible] AWG CU	(NONE)	[illegible] AWG CU
175	1 @ 1.5"	[illegible] AWG CU	(NONE)	[illegible] AWG CU
150	1 @ 1.5"	[illegible] AWG CU	(NONE)	[illegible] AWG CU
125	1 @ 1.25"	[illegible] AWG CU	(NONE)	[illegible] AWG CU
110	1 @ 1.25"	[illegible] AWG CU	(NONE)	[illegible] AWG CU
100	1 @ 1.25"	[illegible] AWG CU	(NONE)	[illegible] AWG CU
[illegible]	1 @ 1.25"	[illegible] AWG CU	(NONE)	[illegible] AWG CU
[illegible]	1 @ 1"	[illegible] AWG CU	(NONE)	[illegible] AWG CU
70	1 @ 1"	[illegible] AWG CU	(NONE)	[illegible] AWG CU
60	1 @ 0.75"	[illegible] AWG CU	(NONE)	[illegible] AWG CU
50K	1 @ 1"	[illegible] AWG CU	(NONE)	[illegible] AWG CU
50	1 @ 0.75"	[illegible] AWG CU	(NONE)	[illegible] AWG CU
40	1 @ 0.75"	[illegible] AWG CU	(NONE)	[illegible] AWG CU
30	1 @ 0.5"	[illegible] AWG CU	(NONE)	[illegible] AWG CU
SINGLE PHASE NO NEUTRAL				
[illegible]	1 @ 1.25"	[illegible] AWG CU	(NONE)	[illegible] AWG CU
175S	1 @ 1.25"	[illegible] AWG CU	(NONE)	[illegible] AWG CU
[illegible]	1 @ 1"	[illegible] AWG CU	(NONE)	[illegible] AWG CU
[illegible]	1 @ 1"	[illegible] AWG CU	(NONE)	[illegible] AWG CU
[illegible]	1 @ 1"	[illegible] AWG CU	(NONE)	[illegible] AWG CU
[illegible]	1 @ 1"	[illegible] AWG CU	(NONE)	[illegible] AWG CU
70S	1 @ 1"	[illegible] AWG CU	(NONE)	[illegible] AWG CU
[illegible]	1 @ 0.75"	[illegible] AWG CU	(NONE)	[illegible] AWG CU
[illegible]	1 @ 0.5"	[illegible] AWG CU	(NONE)	[illegible] AWG CU
[illegible]	1 @ 0.5"	[illegible] AWG CU	(NONE)	[illegible] AWG CU
[illegible]	1 @ 0.5"	[illegible] AWG CU	(NONE)	[illegible] AWG CU
GROUNDING CONDUCTOR				
2500	1 @ 1"	(NONE)	(NONE)	[illegible] MCM CU
2250	1 @ 1"	(NONE)	(NONE)	[illegible] AWG CU
2000	1 @ 1"	(NONE)	(NONE)	[illegible] AWG CU
1750	1 @ 0.75"	(NONE)	(NONE)	[illegible] AWG CU
1500	1 @ 0.75"	(NONE)	(NONE)	[illegible] AWG CU
1250	1 @ 0.75"	(NONE)	(NONE)	[illegible] AWG CU
1100	1 @ 0.5"	(NONE)	(NONE)	[illegible] AWG CU
1000	1 @ 0.5"	(NONE)	(NONE)	[illegible] AWG CU
[illegible]	1 @ 0.5"	(NONE)	(NONE)	[illegible] AWG CU
[illegible]	1 @ 0.5"	(NONE)	(NONE)	[illegible] AWG CU
700	1 @ 0.5"	(NONE)	(NONE)	[illegible] AWG CU
600	1 @ 0.5"	(NONE)	(NONE)	[illegible] AWG CU
500	1 @ 0.5"	(NONE)	(NONE)	[illegible] AWG CU
400	1 @ 0.5"	(NONE)	(NONE)	[illegible] AWG CU
300	1 @ 0.5"	(NONE)	(NONE)	[illegible] AWG CU
TRANSFORMER SECONDARY FEEDER				
[illegible]	[illegible] @ 3.5"	[illegible] MCM CU	[illegible] MCM CU	[illegible] AWG CU
[illegible]	[illegible] @ 3.5"	[illegible] MCM CU	[illegible] MCM CU	[illegible] AWG CU
[illegible]	[illegible] @ 3.5"	[illegible] MCM CU	[illegible] MCM CU	[illegible] AWG CU
[illegible]	[illegible] @ 3"	[illegible] MCM CU	[illegible] MCM CU	[illegible] AWG CU
[illegible]	[illegible] @ 3.5"	[illegible] MCM CU	[illegible] MCM CU	[illegible] AWG CU
[illegible]	1 @ 3.5"	[illegible] MCM CU	[illegible] MCM CU	[illegible] AWG CU
250T	1 @ 3"	[illegible] MCM CU	[illegible] MCM CU	[illegible] AWG CU
225T	1 @ 2.5"	[illegible] AWG CU	[illegible] AWG CU	[illegible] AWG CU
150T	1 @ 2"	[illegible] AWG CU	[illegible] AWG CU	[illegible] AWG CU
110T	1 @ 1.5"	[illegible] AWG CU	[illegible] AWG CU	[illegible] AWG CU
60T	1 @ 1"	[illegible] AWG CU	[illegible] AWG CU	[illegible] AWG CU

Electrical drawings not reviewed by HLS. Proof of plan acceptance by WY DFPES must be provided to HLS prior to authorization to proceed with construction.

ERDMAN

One Erdman Place
Madison, Wisconsin 53717
Phone (608) 410-8000
FAX (608) 410-8600

Star Valley Health - Alpine Clinic ED and Hybrid OR

ALPINE, WY

Architectural Services Provided By:
ERDMAN COMPANY
Architect of Record
Daniel Delk
License #: C-3701

Engineering Services Provided By:
ERDMAN COMPANY
Professional Engineer
Structure
Andrew S. Hoffman
License #: 16179

Professional Engineer
Mechanical
Michael S. Meleyer
License #: 8953

Professional Engineer
Plumbing
Eric Haines
License #: 18748

Professional Engineer
Electrical
Randy D. Wilde
License #: 14207

Contractor Services Provided By:
ERDMAN COMPANY

Consultant Services Provided By:

No.	Description	Date
8	CBC05	08-05-2024
7	CBC04	07-08-2024
6	CBC01	02-26-2024
5	ELECTRICAL RESUBMITTAL	10-23-2023
4	FOR CONSTRUCTION	10-04-2023
3	BID SET	08-06-2023
2	DOH PRELIMINARY REVIEW	08-03-2023
1	FINAL DESIGN DEVELOPMENT	06-23-2023

Document Release

Sheet Name
ELECTRICAL RISER DIAGRAM

Drn: WALSH Chk: RWILDE

Sheet Number
E601

JOB # 658421

© 2023 ERDMAN COMPANY

Branch Panel: LSH

Location: ELECTRICAL 2005
Supply From: MDP
Mounting: SURFACE
Enclosure: NEMA-1

Volts: 480/277 Wye
Phases: 3
Wires: 4
Feed:
Type: NF 20-INCH WIDE

A.I.C. Rating: 22K-125K
Mains Type: MLO
Mains Rating: 125 A
MCB Rating: N/A

Notes:

CKT	Circuit Description	Trip	Poles	A (VA)		B (VA)		C (VA)		Poles	Trip	Circuit Description	CKT
1	TRANSFORMER T-LS	45 A	3	1240									2
3	--	--	--			900							4
5	--	--	--					2600					6
7	LIGHTS Room 1402, 1414, 1512, 76, 1432	20 A	1	538									8
9													10
11													12
13													14
15													16
17													18
		Total Load:		1778 VA		900 VA		2600 VA					

Load Classification	Connected Load	Demand Factor	Estimated Demand	Panel Totals	
LIGHTS	738 VA	125.00%	922 VA	Largest Motor:	
RECEPTACLES	540 VA	100.00%	540 VA	Total Conn. Load:	5278 VA
MISC	4000 VA	100.00%	4000 VA	NEC Adjusted Load:	5462 VA
				Minimum Circuit Ampacity:	7 A

Branch Panel: EQH

Location: ELECTRICAL 2005
Supply From: MDP
Mounting: SURFACE
Enclosure: NEMA-1

Volts: 480/277 Wye
Phases: 3
Wires: 4
Feed:
Type: NF 20-INCH WIDE

A.I.C. Rating: 22K
Mains Type: MLO
Mains Rating: 400 A
MCB Rating: N/A

Notes:

CKT	Circuit Description	Trip	Poles	A (VA)		B (VA)		C (VA)		Poles	Trip	Circuit Description	CKT
1	TRANSFORMER T-EQ	80 A	3	5123	6374					3	40 A	(4) WASHER	2
3	--	--	--			3145	6374			--	--	--	4
5	--	--	--					4030	6374	--	--	--	6
7	CT	125 A	3	6667	15796					3	80 A	STERILIZER - STEAM GENERATOR	8
9	--	--	--			6667	15796			--	--	--	10
11	--	--	--					6667	15796	--	--	--	12
13	X RAY IMAGING 1305 (6)	80 A	3	28333	1940					3	20 A	STERILIZER	14
15	--	--	--			28333	1940			--	--	--	16
17	--	--	--					28333	1940	--	--	--	18
19	OR AHU FANS	70 A	3	12760	16667					3	100 A	GE MOP COMP 1416	20
21	--	--	--			12760	16667			--	--	--	22
23	--	--	--					12760	16667	--	--	--	24
25	ED AHU FANS	20 A	3	3373									26
27	--	--	--			3373							28
29	-- (4)	--	--					3373					30
31	HVAC BLOWERS OR-RAF	20 A	3	1243									32
33	--	--	--			1243							34
35	--	--	--					1243					36
37	HVAC BLOWERS ED-RAF	15 A	3	497									38
39	--	--	--			497							40
41	--	--	--					497					42
43	MEDICAL VACUUM PUMP	15 A	3	2656									44
45	--	--	--			2656							46
47	--	--	--					2656					48
49	AIR COMPRESSOR	15 A	3	1487									50
51	--	--	--			1487							52
53	--	--	--					1487					54
55	PUMP P-2 MECHANICAL 2004	15 A	3	1081									56
57	--	--	--			1081							58
59	--	--	--					1081					60
61	PUMP P-1 MECHANICAL 2004	15 A	3	1081									62
63	--	--	--			1081							64
65	--	--	--					1081					66
67	HVAC BLOWERS ILF-11 HALL 1402	15 A	3	920									68
69	--	--	--			920							70
71	--	--	--					920					72
73	Space	--	1										74
75	Space	--	1										76
77	Space	--	1										78
79	Space	--	1										80
81	Space	--	1										82
83	Space	--	1										84
		Total Load:		105998 VA		104020 VA		106905 VA					

Load Classification	Connected Load	Demand Factor	Estimated Demand	Panel Totals	
HVAC COOLING	2666 VA	100.00%	2666 VA	Largest Motor:	
HVAC HEATING	648 VA	100.00%	648 VA	Total Conn. Load:	316922 VA
HVAC BLOWERS	49240 VA	125.00%	61550 VA	NEC Adjusted Load:	227334 VA
MISC	111344 VA	100.00%	111344 VA		
X RAY	135000 VA	25.00%	33750 VA	Minimum Circuit Ampacity:	273 A
HVAC	18024 VA	100.00%	18024 VA		

Branch Panel: CBH

Location: ELECTRICAL 2005
Supply From: MDP
Mounting: SURFACE
Enclosure: NEMA-1

Volts: 480/277 Wye
Phases: 3
Wires: 4
Feed:
Type: NF 20-INCH WIDE

A.I.C. Rating: 22K
Mains Type: MLO
Mains Rating: 125 A
MCB Rating: N/A

Notes:

CKT	Circuit Description	Trip	Poles	A (VA)		B (VA)		C (VA)		Poles	Trip	Circuit Description	CKT
1	TRANSFORMER T-CB	80 A	3	15620									2
3	--	--	--			13786							4
5	--	--	--					15496					6
7	LIGHTS Room 1410, 1418, 1432, 1414, 1412,...	20 A	1	2078									8
9	LIGHTS Room 1513, 1518, 1521, 1519, 1517,...	20 A	1			2612							10
11	LIGHTS	20 A	1					1364					12
13	LIGHTS	20 A	1	579									14
15	ISOLATED POWER PANEL IP1 (6)	30 A	2			2120							16
17	--	--	--					1560					18
19	ISOLATED POWER PANEL IP2	30 A	2	4602									20
21	--	--	--			2940							22
23													24
25													26
27													28
29													30
		Total Load:		22879 VA		21458 VA		19461 VA					

Load Classification	Connected Load	Demand Factor	Estimated Demand	Panel Totals	
LIGHTS	7109 VA	125.00%	8886 VA	Largest Motor:	
RECEPTACLES	22680 VA	72.05%	16340 VA	Total Conn. Load:	62798 VA
HVAC BLOWERS	186 VA	125.00%	233 VA	NEC Adjusted Load:	58281 VA
MISC	32822 VA	100.00%	32822 VA		
				Minimum Circuit Ampacity:	70 A

(3) THE 30 PLANS HAVE BEEN DESIGNED IN COMPLIANCE WITH THE MOST RECENTLY ADOPTED CODES. ALL WORK SHALL BE IN ACCORDANCE WITH CURRENTLY ADOPTED CODES INCLUDING THE 2023 VERSION OF THE NATIONAL ELECTRICAL CODE.

Branch Panel: LSL

Location: ELECTRICAL 2005
Supply From: T-LS
Mounting: SURFACE
Enclosure: NEMA-1

Volts: 120/208 Wye
Phases: 3
Wires: 4
Feed:
Type: NQ 20-INCH WIDE

A.I.C. Rating: 22K
Mains Type: MCB
Mains Rating: 100 A
MCB Rating: 60 A

Notes:

CKT	Circuit Description	Trip	Poles	A (VA)		B (VA)		C (VA)		Poles	Trip	Circuit Description	CKT
1	MISC FACP	20 A	1	500									2
3	FIRE SMOKE DAMPERS	20 A	1			400							4
5	FIRE SMOKE DAMPERS	20 A	1					500					6
7	GENERATOR RECEPTACLES	20 A	1	540									8
9	GENERATOR LIGHTS	20 A	1			200							10
11	GENERATOR BATTERY CHARGER	20 A	1					1800					12
13	MOTOR OPERATED DAMPERS	20 A	1	200									14
15	MOTOR OPERATED DAMPERS	20 A	1			300							16
17	MOTOR OPERATED DAMPERS	20 A	1					300					18
		Total Load:		1240 VA		900 VA		2600 VA					

Load Classification	Connected Load	Demand Factor	Estimated Demand	Panel Totals	
LIGHTS	200 VA	125.00%	250 VA	Largest Motor:	
RECEPTACLES	540 VA	100.00%	540 VA	Total Conn. Load:	4740 VA
MISC	4000 VA	100.00%	4000 VA	NEC Adjusted Load:	4790 VA
				Minimum Circuit Ampacity:	13 A

Branch Panel: EQL

Location: ELECTRICAL 2005
Supply From: T-EQ
Mounting: SURFACE
Enclosure: NEMA-1

Volts: 120/208 Wye
Phases: 3
Wires: 4
Feed:
Type: NQ 20-INCH WIDE

A.I.C. Rating: 22K
Mains Type: MCB
Mains Rating: 100 A
MCB Rating: 90 A

Notes:

CKT	Circuit Description	Trip	Poles	A (VA)		B (VA)		C (VA)		Poles	Trip	Circuit Description	CKT
1	HVAC HEATING MECHANICAL 2004	20 A	1	324									2
3	HVAC HEATING MECHANICAL 2004	20 A	1			324							4
5	HVAC COOLING CU-DSS-1	20 A	2					1333					6
7	--	--	--	1333									8
9	MISC MECHANICAL 2004	20 A	1			100							10
11	DSS-COMP 1	25 A	2					1978					12
13	--	--	--	1978									14
15	DSS-COMP 2	25 A	2			1978							16
17	--	--	--					1978					18
19	HVAC BLOWERS AMB GARAGE 1519	20 A	1	746									20
21	HVAC BLOWERS	20 A	2			746							22
23	--	--	--					746					24
25	HVAC BLOWERS AMB GARAGE 1519	20 A	1	746									26
27													28
29													30
		Total Load:		5123 VA		3145 VA		6030 VA					

Load Classification	Connected Load	Demand Factor	Estimated Demand	Panel Totals	
HVAC COOLING	2666 VA	100.00%	2666 VA	Largest Motor:	
HVAC HEATING	648 VA	100.00%	648 VA	Total Conn. Load:	14298 VA
HVAC BLOWERS	2980 VA	125.00%	3725 VA	NEC Adjusted Load:	14395 VA
MISC	100 VA	100.00%	100 VA		
HVAC	7904 VA	100.00%	7904 VA	Minimum Circuit Ampacity:	40 A

Branch Panel: CBL

Location: ELECTRICAL 2005
Supply From: T-CB
Mounting: SURFACE
Enclosure: NEMA-1

Volts: 120/208 Wye
Phases: 3
Wires: 4
Feed:
Type: NQ 20-INCH WIDE

A.I.C. Rating: 22K
Mains Type: MCB
Mains Rating: 225 A
MCB Rating: 150 A

Notes:

CKT	Circuit Description	Trip	Poles	A		B		C		Poles	Trip	Circuit Description	CKT
1	RECEPTACLES Room 1505	20 A	1	720	500					1	20 A	MISC	2
3	MISC NS / MEDS 1506	20 A	1			750	720			1	20 A	RECEPTACLES CTRL 1513	4
5	MISC NS / MEDS 1506	20 A	1					750	1500	1	20 A	MISC	6
7	MISC TRAUMA 1510	20 A	1	500	1500					1	20 A	MISC LINEN 1423	8
9	MISC TRAUMA 1510	20 A	1			500	900			1	20 A	IT RECEPTACLES 2001	10
11	RECEPTACLES TRAUMA 1510	20 A	1					900	1000	1	20 A	IT RECEPTACLES 2001	12
13	RECEPTACLES TRAUMA 1510	20 A	1	900	1000					1	20 A	MISC IT 2001	14
15	RECEPTACLES TRAUMA 1510	20 A	1			360	360			1	20 A	MISC IT 2001	16
17	MISC AMB GARAGE 1519	20 A	1					1000	186	1	15 A	(4) HVAC BLOWERS ILF-8	18
19	MISC AMB GARAGE 1519	20 A	1	1000	500					1	20 A	MISC	20
21	MISC AMB GARAGE 1519	20 A	1			500	500			1	20 A	MISC	22
23	MISC AMB GARAGE 1519	20 A	1					500	500	1	20 A	MISC	24
25	MISC AMB VEST 1520	20 A	1	1000	500					1	20 A	MISC	26
27	MISC CORRIDOR 1512	20 A	1			1000	180			1	20 A	RECEPTACLES	28
29	MISC TRAUMA 1510	20 A	1					200	880	1	20 A		30
31	MISC TRAUMA 1510	20 A	1	200	1500					1	20 A	MISC	32
33	RECEPTACLES PACU 1410	20 A	1			1080	360			1	20 A	RECEPTACLES REC 1401	34
35	RECEPTACLES PRE/POST 1407	20 A	1					1080	680	1	20 A	RECEPTACLES NS / MEDS 1506	36
37	RECEPTACLES PRE/POST 1409	20 A	1	1080	180					1	20 A	RECEPTACLES SCRUB 1420	38
39	RECEPTACLES PRE/POST 1411	20 A	1			1080	816			1	20 A	LIGHTS Room 1502, 1507	40
41	RECEPTACLES PRE/POST 1413	20 A	1					1080					42
43	RECEPTACLES PACU 1425	20 A	1	1080									44
45	MISC NS / NUTR 1412	20 A	1			500							46
47	MISC NS / NUTR 1412	20 A	1					500					48
49	RECEPTACLES	20 A	1	540									50
51	MISC	20 A	1			1000							52
53	MISC	20 A	1					1000					54
55	RECEPTACLES CNTL 1415	20 A	1	540									56
57	RECEPTACLES CNTL 1415	20 A	1			540							58
59	RECEPTACLES COMP 1416	20 A	1					1000					60
61	RECEPTACLES COMP 1416	20 A	1	1000									62
63	RECEPTACLES COMP 1416	20 A	1			360							64
65	RECEPTACLES COMP 1416	20 A	1					360					66
67	RECEPTACLES COMP 1416	20 A	1	360									68
69	MISC SOILED 1436	20 A	1			1200							70
71	RECEPTACLES COMP 1416	20 A	1					180					72
73	Spare	20 A	1	0									74
75	RECEPTACLES CLEAN 1435	20 A	1			360							76
77	MISC CLEAN 1435	20 A	1					1500					78
79	Room 1424, 1431	20 A	1	1020									80
81	RECEPTACLES OR EQUIPMENT 1418	20 A	1			720							82
83	RECEPTACLES OR EQUIPMENT 1418	20 A	1					720					84
		Total Load:		15620 VA		13786 VA		15496 VA					

Load Classification	Connected Load	Demand Factor	Estimated Demand	Panel Totals	
LIGHTS	816 VA	125.00%	1020 VA	Largest Motor:	
RECEPTACLES	16920 VA	79.55%	13460 VA	Total Conn. Load:	44902 VA
HVAC BLOWERS	186 VA	125.00%	233 VA	NEC Adjusted Load:	41693 VA
MISC	26980 VA	100.00%	26980 VA		
				Minimum Circuit Ampacity:	118 A

Electrical drawings not reviewed by HLS. Proof of plan acceptance by WY DFPES must be provided to HLS prior to authorization to proceed with construction.

ERDMAN

One Erdman Place
Madison, Wisconsin 53717

Star Valley Health - Alpine Clinic ED and Hybrid OR

ALPINE, WY

Architectural Services Provided By:
ERDMAN COMPANY
Architect of Record
Daniel Delk
License #: C-3701

Engineering Services Provided By:
ERDMAN COMPANY
Professional Engineer
Structure
Andrew S. Hoffman
License #: 16179

Professional Engineer
Mechanical
Michael S. Meteyer
License #: 6953

Professional Engineer
Plumbing
Eric Haines
License #: 18748

Professional Engineer
Electrical
Randy D. Wilde
License #: 14207

Contractor Services Provided By:
ERDMAN COMPANY

Consultant Services Provided By:

No.	Description	Date
6	CB005	08-05-2024
5	CB003	05-03-2024
4	CB001	02-26-2024
3	ELECTRICAL RESUBMITTAL	10-23-2023
2	FOR CONSTRUCTION	10-04-2023
1	BID SET	09-08-2023

Document Release

Professional Engineer RANDY D. WILDE 14207 WYOMING

Sheet Name
NEW PANEL SCHEDULES

Drn: WALSH Chk: RWILDE

Sheet Number
E603

JOB # 658421

© 2023 ERDMAN COMPANY

TURN-KEY MEDICAL, INC.

CARESTREAM DR-FIT CM TUBE RADIOGRAPHIC ROOM

STAR VALLEY ALPINE CLINIC ALPINE, WYOMING

TURN-KEY MEDICAL, INC.
365 S.W. 5TH AVE.
MERIDIAN, IDAHO 83642

REV AUTHORED BY	DATE	DOCUMENT NUMBER	REV.
REV DRAFTED BY	DATE		0.1
REV RELEASE DATE		SIZE B ARCH	

THIS DOCUMENT CONTAINS PROPRIETARY DATA OF TURN-KEY MEDICAL, INC. AND SHALL NOT BE USED FOR PURPOSES OTHER THAN THOSE AGREED UPON BETWEEN TURN-KEY MEDICAL AND ITS CUSTOMER. THIS DRAWING IS NOT TO BE USED FOR CONSTRUCTION PURPOSES.

STAR VALLEY ALPINE CLINIC
DR-FIT CM X-RAY ROOM PLAN
ALPINE, WYOMING

THESE DRAWINGS ARE FOR REVIEWING PURPOSES ONLY

DATE	SCALE	DRAWN BY	PURCHASE ORDER
8/19/2024	3/8"=1'-0"	SKD	

PROJECT NO
FINAL

SHEET NO
COVER

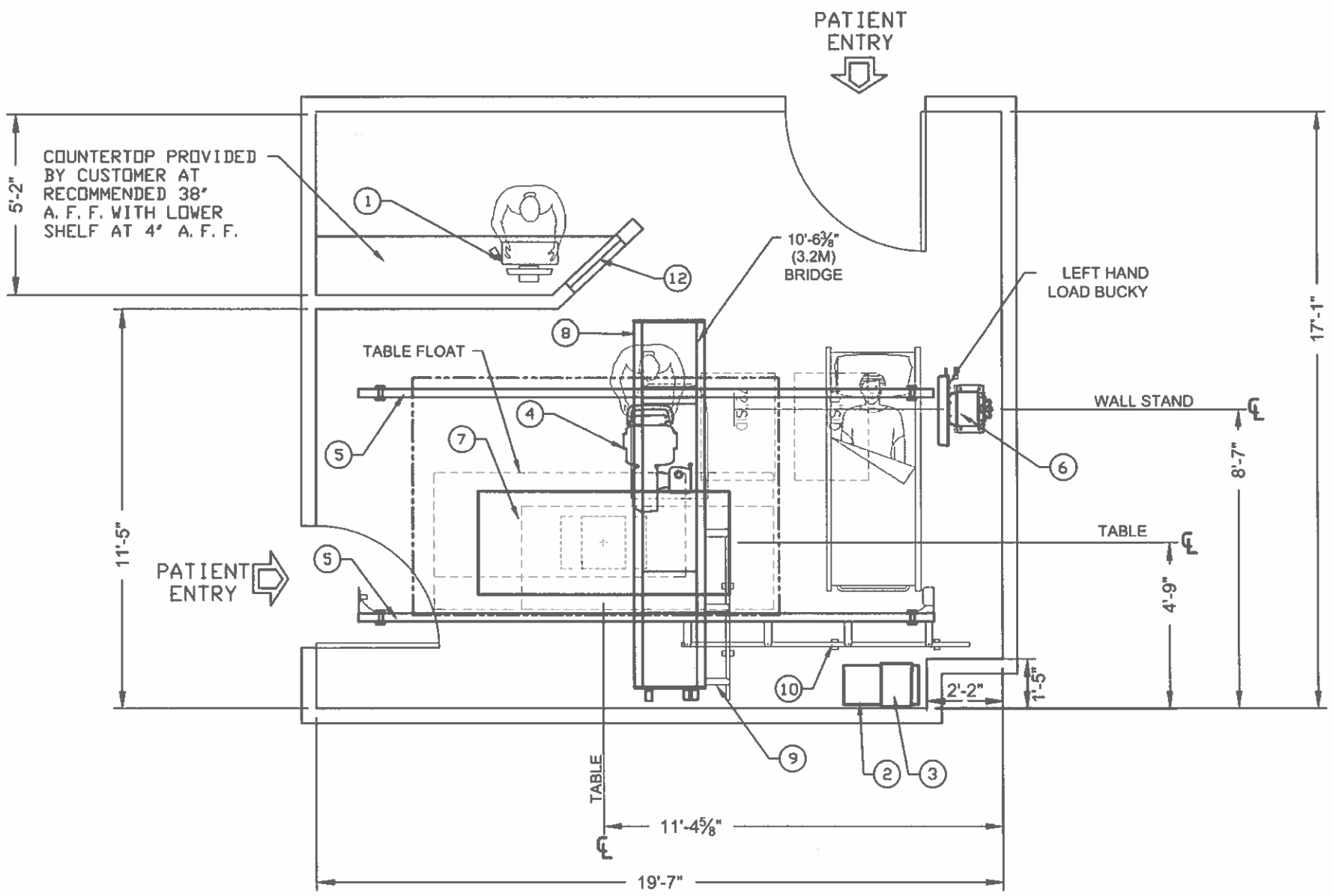

NOTES:

72" SID TO FLOOR IS OBTAINABLE

EQUIPMENT PLAN

EQUIPMENT LEGEND

ITEM	SUPPLIED/INSTALLED BY CARESTREAM HEALTH	BTU/hr lb	wt lb	W in	L in	H in
1	COMPUTER- HP ENGAGE FLEX PRO WITH HP E230T DISPLAY	--	14.2	13.3	15.1	4
2	CARESTREAM GENERATOR	1000	174	13.5	25.6	24.1
3	PDU- POWER DISTRIBUTION UNIT	--	--	10.4	25.8	5.75
4	OTC TUBE/COLLIMATOR ASSY	--	--	--	--	--
5	4M LONGITUDINAL RAIL	--	65		157	
6	WALL STAND MANUAL NON-TILT	--	415	--	--	89
7	QT-750 ELEVATING TABLE	--	500	86	35.8	32.5
8	OTC BRIDGE	--	661	24	126.3	3.63
9	BRIDGE CABLE RAIL	--	--	--	59	--
10	LONGITUDINAL CABLE RAIL	--	--	--	98.5	--
11	DR LLI ROLLING STAND	--	178	47	30	75

NOTE:TOTAL OTC WEIGHT WITH RAILS IS 992 lbs

ITEM	SUPPLIED/INSTALLED BY CUSTOMER OR CONTRACTOR
12	WINDOW - GLASS, LEAD LINED

COMPASS OTC SYS.OPERATING ENVIRONMENT REQUIREMENTS
AMBIENT TEMPERATURE: +10°C TO +40°C
ATMOSPHERIC PRESSURE: 700 hPa to 1060 hpa

CEILING HEIGHT RANGE: 8'-10"TO 10'-0"
THIS CEILING HEIGHT RANGE PROVIDES FULL FUNCTIONALITY OF THE CARESTREAM SYSTEM. ANY DEVIATION MUST BE DISCUSSED WITH THE CARESTREAM PROJECT MANAGER.
EXISTING CEILING HEIGHT: X'-X" (X.Xm)

TURN-KEY MEDICAL, INC.
3655 W. STRAYER
MERIDIAN, IDAHO 83642

REV AUTHORED BY | DATE | DOCUMENT NUMBER | REV 0.1
REV DRAFTED BY | DATE
REV RELEASE DATE | SIZE B ARCH

THIS DOCUMENT CONTAINS PROPRIETARY DATA OF TURN-KEY MEDICAL, INC. AND SHALL NOT BE USED FOR PURPOSES OTHER THAN THOSE AGREED UPON BETWEEN TURN-KEY MEDICAL AND ITS CUSTOMER. THIS DRAWING IS NOT TO BE USED FOR CONSTRUCTION PURPOSES.

STAR VALLEY ALPINE CLINIC
DR-FIT CM X-RAY ROOM PLAN
ALPINE, WYOMING

THESE DRAWINGS ARE FOR REVIEWING PURPOSES ONLY

DATE 8/19/2024
SCALE 3/8" = 1'-0"
DRAWN BY SKD
PURCHASE ORDER
PROJECT NO.
SHEET NO A1

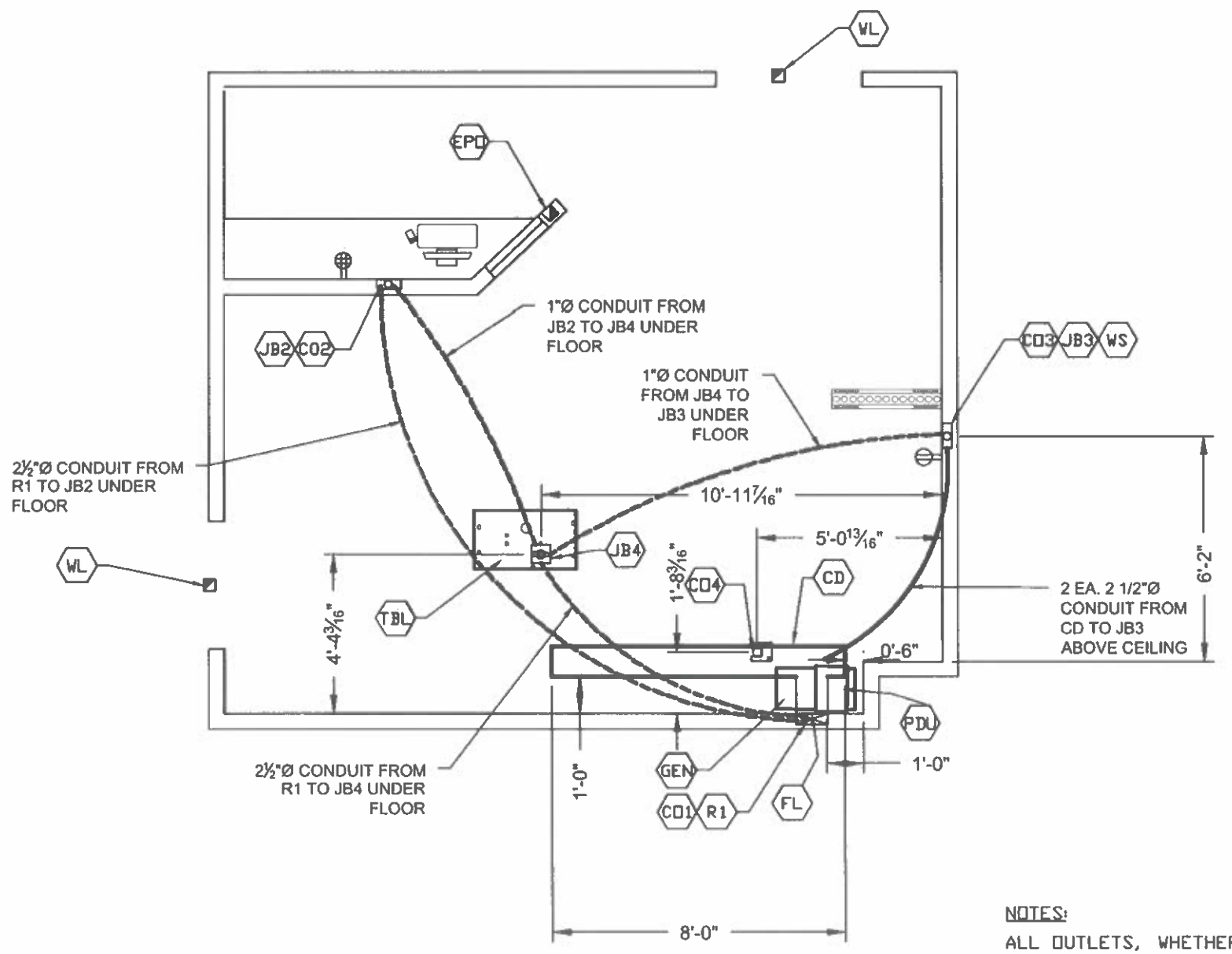

ELECTRICAL PLAN

ELECTRICAL INSTALLED BY CUSTOMER

NOTES:

ALL OUTLETS, WHETHER DUPLEX OR QUAD, SHOWN ON CARESTREAM SITE SPECIFIC DRAWINGS, ARE EXCLUSIVELY FOR CARESTREAM EQUIPMENT. ANY CUSTOMER REQUIRED OUTLETS MUST BE APPROVED SEPARATELY.

ELECTRICAL LEGEND

ITEMS NOT SUPPLIED/INSTALLED BY CARESTREAM

SYM.	SUPPLIED/INSTALLED BY CUSTOMER/CONTRACTOR
R1	RISER- 10"x3½" FLUSH MOUNTED WITH REMOVABLE COVERS FROM CD TO FINSIHED FLOOR, PROVIDE DIVIDERS PER LOCAL CODE
CO1	CUT OUT- 3"Ø WITH GROMMET IN COVER PLATE OF R1, 18" A.F.F.
CD	CEILING DUCT- 10"x3½" ABOVE FINISHED CEILING, WITH REMOVABLE COVERS FACING UP, DIVIDERS PER LOCAL CODE
JB2	JUNCTION BOX- 8"x8" FLUSH MOUNTED IN CONTROL ROOM WALL, BOTTOM AT 14" A.F.F.
CO2	CUT OUT- 2"Ø WITH GROMMET ON FACE PLATE OF JB2
WS	WALL STAND CABLE ENTRY
JB3	JUNCTION BOX- 6"x6" FLUSH MOUNTED, BOTTOM AT 36" A.F.F.
CO3	CUT OUT- 2"Ø WITH GROMMET ON FACE PLATE OF JB3
CO4	CUT OUT- 3"Ø WITH GROMMET ON BOTTOM OF CD FOR OTC HOSE BRACKET
TBL	CARESTREAM TABLE BASE SHOWN FOR REFERENCE
JB4	JUNCTION BOX- 6"x6" FLUSH MOUNTED IN FLOOR UNDER TABLE
GEN	GENERATOR- SEE POWER SPECIFICATIONS ON SHEET E2
FL	CUSTOMER PROVIDED 1¼"Ø SEAL-TIGHT, INCLUDE FITTINGS FOR MAIN POWER TO CARESTREAM GENERATOR, WIP LENGTH PER LOCAL CODE,INSTALLED BY CUSTOMER ELECTRICIAN, SEE SHEET E2 FOR ELECTRICAL POWER REQUIREMENTS.
PDU	POWER DISTRIBUTION UNIT
WL	WARNING LIGHT- OPTIONAL "X-RAY IN USE" LIGHT PER CODE, CUSTOMER TO PROVIDE FIXTURE AND 24V POWER / CONTACTS TO CSH GENERATOR. SEE SHEET E2 SCHEMATIC DIAGRAM.
EPD	EMERGENCY POWER OFF- OPTIONAL SWITCH TO CUSTOMER SHUNT BREAKER IN MAIN DISCONNECT, EXACT LOCATION PER LOCAL CODE OR BY CUSTOMER
	120 VAC QUAD OUTLET, 14" A.F.F.
	120 VAC DUPLEX OUTLET, 14" A.F.F.
△	NETWORK DROP, 14" A.F.F.

NOTE: ALL ELECTRICAL DUCTS AND CONNECTIONS MUST CONFORM TO THE N.E.C. CODES, IN ADDITION TO STATE AND LOCAL REGULATIONS FOR THE COUNTRY OR LOCALITY IN WHICH THE EQUIPMENT IS INSTALLED. SITE IS RESPONSIBLE TO DETERMINE ELECTRICAL DESIGN INCLUDING NUMBER OF DIVIDERS IN CABLE TROUGH PER CODE

TURN-KEY MEDICAL, INC.
365 S.W. 5TH AVE
MERIDIAN, IDAHO 83642

REV / AUTHORIZED BY | DATE | REV / DRAFTED BY | DATE | REV RELEASE DATE | DATE | DOCUMENT NUMBER | REV 0.1 | SIZE B ARCH

THIS DOCUMENT CONTAINS PROPRIETARY DATA OF TURN-KEY MEDICAL, INC. AND SHALL NOT BE USED FOR PURPOSES OTHER THAN THOSE AGREED UPON BETWEEN TURN-KEY MEDICAL AND ITS CUSTOMER. THIS DRAWING IS NOT TO BE USED FOR CONSTRUCTION PURPOSES.

STAR VALLEY ALPINE CLINIC
DR-FIT CM X-RAY ROOM PLAN
ALPINE, WYOMING

THESE DRAWINGS ARE FOR REVIEWING PURPOSES ONLY

DATE: 8/19/2024 | SCALE: 3/8 = 1'-0" | DRAWN BY: SKD | PURCHASE ORDER

PROJECT NO: FINAL

SHEET NO: E1

ELECTRICAL POWER REQUIREMENTS

SYM	GENERATOR MODEL NO.	MAX POWER OUTPUT (kwh)	NOMINAL LINE VOLTAGE (vac)	DISCONNECT TO GENERATOR 15ft (5m) MAX. (awg)	MAIN DISCONNECT (AMPS)	RECOMMENDED DISTRIBUTION TRANSFORMER CAPACITY (kVA)	MAX.INPUT LINE RESISTANCE AT FULL LOAD RMS (ohms)	PHASE
GEN	QG-65G	65	480	#4	80	85	.21	3

NOTE: ALL INSTALLATIONS MUST MEET THE REQUIREMENTS OF LOCAL ELECTRICAL CODES.
THE ABOVE VALUES ARE RECOMMENDED AS TYPICAL (UNLESS OTHERWISE SPECIFIED)
LISTED ARE THE FOUR MAIN TYPICAL GENERATORS, OTHERS ARE AVAILABLE.

DESCRIPTION: SUPPLIED AND INSTALLED BY CUSTOMERS CONTRACTOR

1. ALL WIRING AND GROUNDING MUST BE IN ACCORDANCE WITH NATIONAL ELECTRIC CODE OR LOCAL ELECTRICAL CODES
2. INPUT VOLTAGE: 380-480 (±10%) VAC 50/60 Hz, 3 PHASE WYE
3. LINE REGULATION: 5% AT FULL LOAD

MAIN POWER CIRCUIT

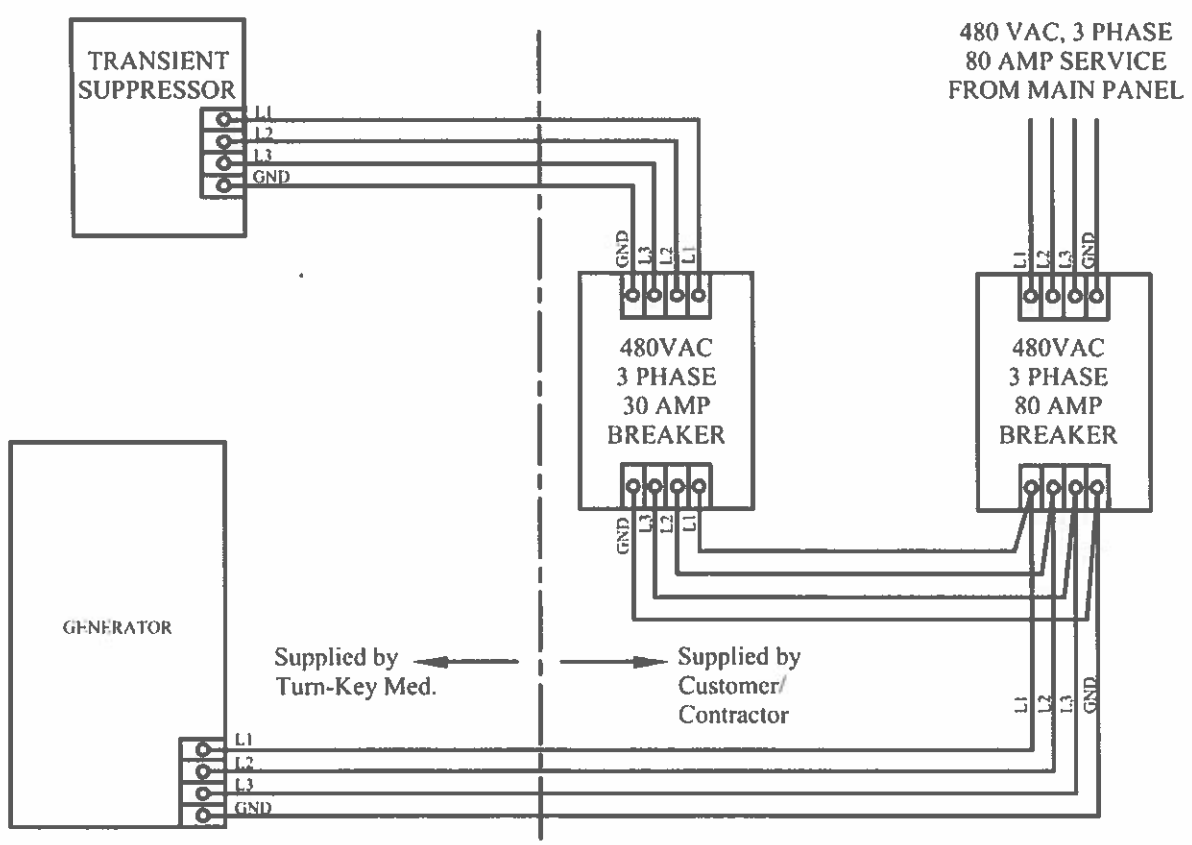

WARNING LIGHT 'X-RAY IN USE' WIRING DIAGRAM
SUPPLIED AND INSTALLED BY CUSTOMER - CONNECTED BY CSH TO GENERATOR

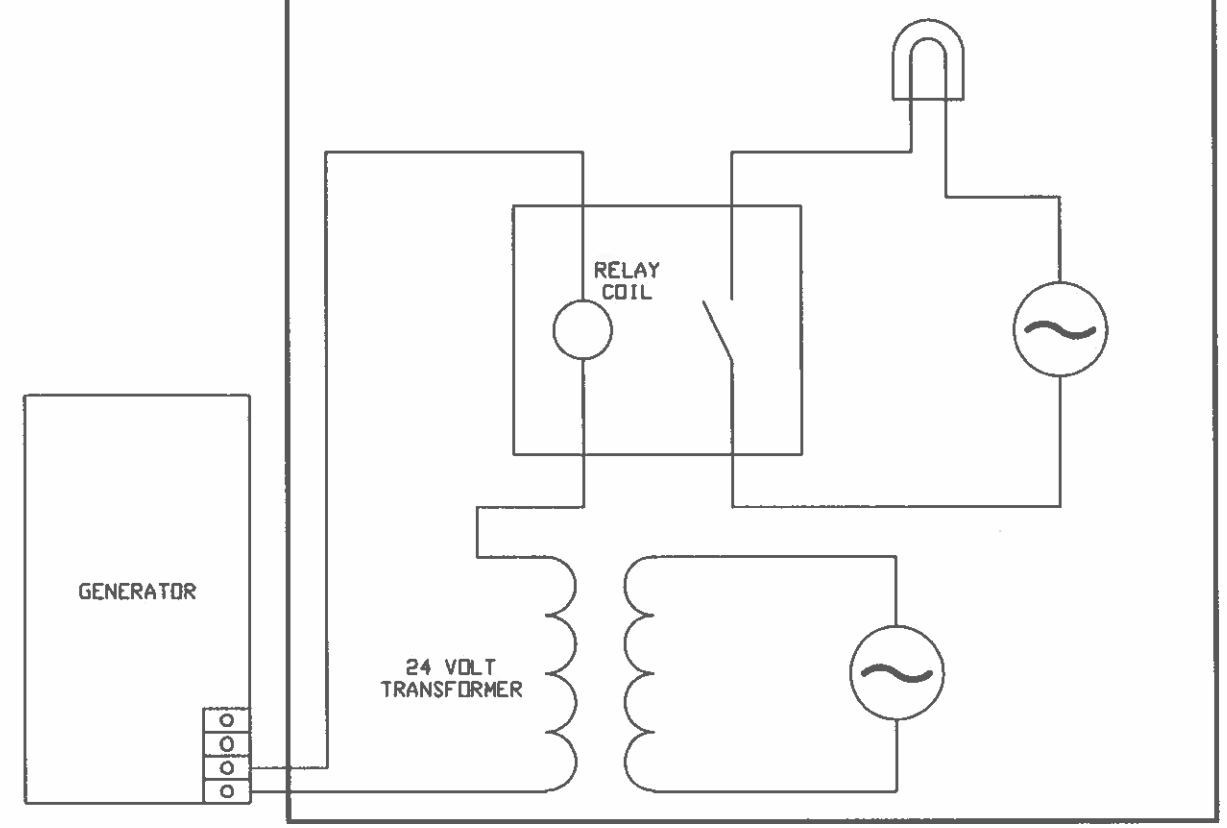

TURN-KEY MEDICAL, INC.
365 S.W. 5TH AVE.
MERIDIAN, IDAHO 83642

REV AUTHORED BY DATE
REV DRAFTED BY DATE
REV RELEASE DATE
DOCUMENT NUMBER
REV D.1
SIZE B ARCH

THIS DOCUMENT CONTAINS PROPRIETARY DATA OF TURN-KEY MEDICAL, INC. AND SHALL NOT BE USED FOR PURPOSES OTHER THAN THOSE AGREED UPON BETWEEN TURN-KEY MEDICAL AND ITS CUSTOMER. THIS DRAWING IS NOT TO BE USED FOR CONSTRUCTION PURPOSES.

STAR VALLEY ALPINE CLINIC
DR-FIT CM X-RAY ROOM PLAN
ALPINE, WYOMING

THESE DRAWINGS ARE FOR REVIEWING PURPOSES ONLY

DATE: 8/19/2024
SCALE: 3/8" = 1'-0"
DRAWN BY: SKD
PURCHASE ORDER:
PROJECT NO
FINAL
SHEET NO
E2

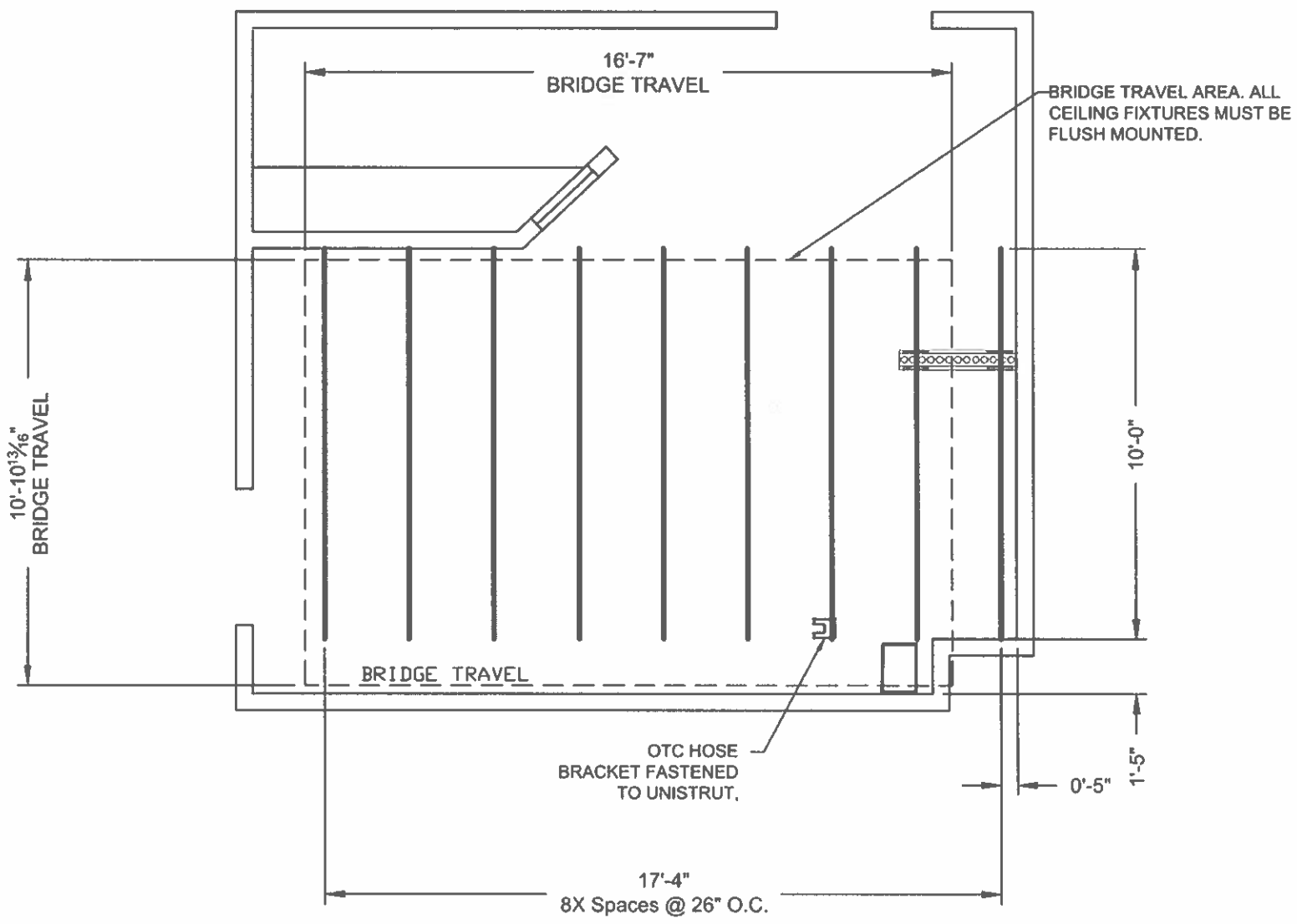

UNISTRUT PLAN

UNISTRUT INSTALLED BY CUSTOMER
(FOR CEILING RESTRICTED AREAS SEE SHEET S2)

STRUCTURAL LEGEND

ITEM	COMPONENT DESCRIPTION: SUPPLIED AND INSTALLED BY CUSTOMER/CONTRACTOR
———	NEW UNISTRUT: FLUSH MOUNTED WITH FINISHED CEILING. UNISTRUT P1001 SERIES OR EQUIVALENT REQUIRED.
—·—·—	EXISTING UNISTRUT: FLUSH MOUNTED WITH FINISHED CEILING. UNISTRUT P1000 SERIES OR EQUIVALENT REQUIRED.

GENERAL NOTES

1. TEGULAR CEILING TILES MUST BE FLUSH WITH UNDERSIDE OF UNISTRUT.

STRUCTURAL NOTES

1. THE FACILITY STRUCTURE SUPPORTING ALL EQUIPMENT LOADS MUST BE VERIFIED BY CUSTOMER'S STRUCTURAL ENGINEER OF RECORD. THIS INCLUDES LOADS FOR WALL, CEILING AND FLOOR.
2. SUPPORT STRUCTURE/UNISTRUT MUST BE LEVELED AT FINISHED CEILING HEIGHT WITHIN 0.039 INCH (1.000 MM).
3. RECOMMENDED CEILING SUPPORT LOADING WEIGHT IS 2204 lbs
4. SEE SPECIFICATION AK0249 FOR ADDITIONAL STRUCTURAL INFORMATION.

TURN-KEY MEDICAL, INC.
3455 W 5TH AVE.
MERIDIAN, IDAHO 83642

REV AUTHORED BY DATE | DOCUMENT NUMBER | REV 0.1
REV DRAFTED BY DATE
REV RELEASE DATE | SIZE B ARCH

THIS DOCUMENT CONTAINS PROPRIETARY DATA OF TURN-KEY MEDICAL, INC. AND SHALL NOT BE USED FOR PURPOSES OTHER THAN THOSE AGREED UPON BETWEEN TURN-KEY MEDICAL AND ITS CUSTOMER. THIS DRAWING IS NOT TO BE USED FOR CONSTRUCTION PURPOSES.

STAR VALLEY ALPINE CLINIC
DR-FIT CM X-RAY ROOM PLAN
ALPINE, WYOMING

THESE DRAWINGS ARE FOR REVIEWING PURPOSES ONLY

DATE: 8/19/2024
SCALE: 3/8" = 1'-0"
DRAWN BY: SKD
PURCHASE ORDER:
PROJECT NO: FINAL
SHEET NO: S1

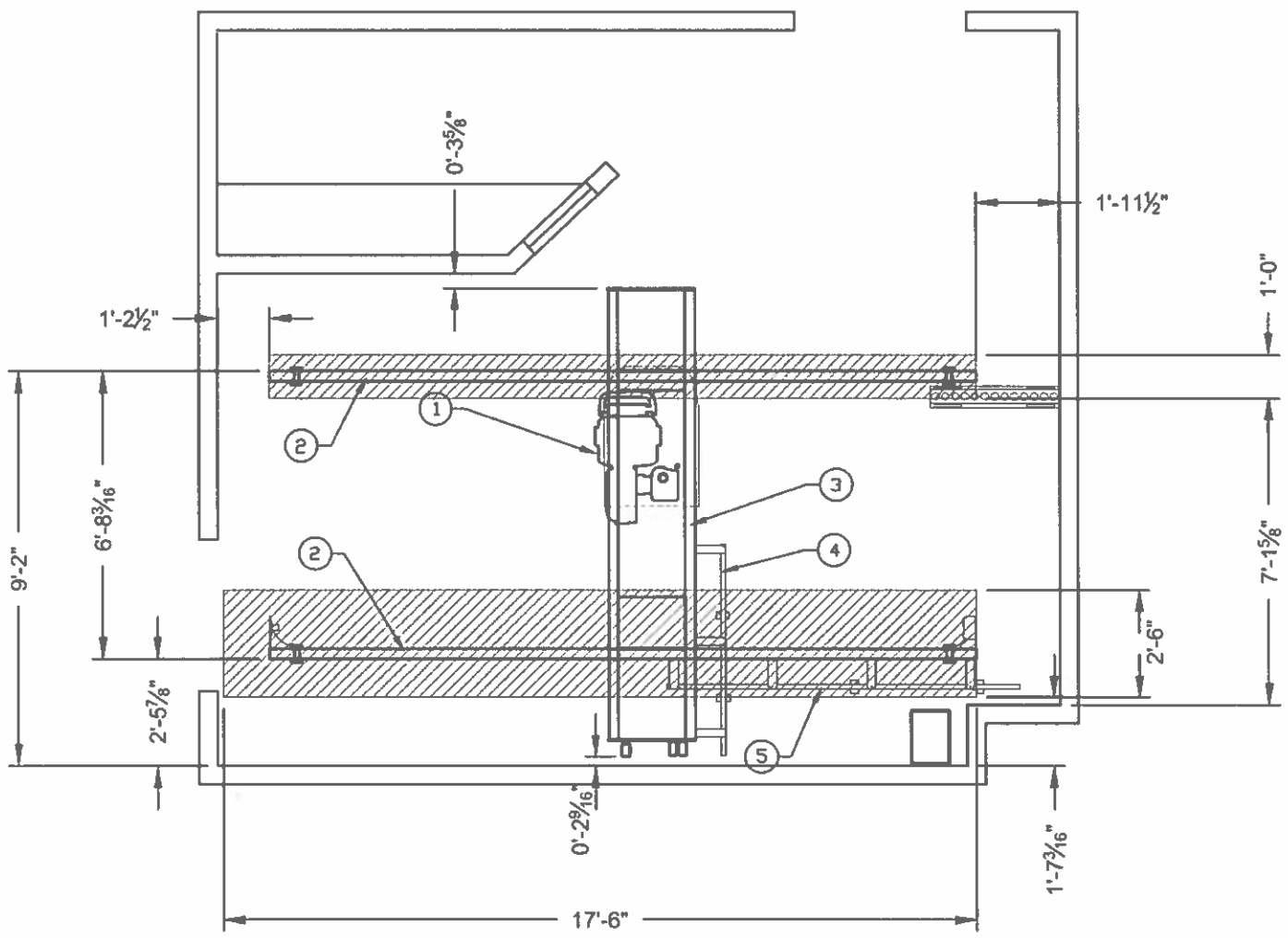

CEILING PLAN
EQUIPMENT INSTALLED BY CSH

STRUCTURAL LEGEND

ITEM	SUPPLIED/INSTALLED BY CARESTREAM HEALTH INC.
1	COMPASS OTC TUBE
2	OTC CEILING RAIL
3	OTC BRIDGE
4	BRIDGE CABLE RAIL
5	LONGITUDINAL CABLE RAIL

RESTRICTED CEILING AREA FOR CARESTREAM EQUIPMENT. NO CEILING MOUNTED FIXTURES, INCLUDING HVAC, LIGHTING AND SPRINKLERS.

GENERAL NOTES

1. REFLECTED CEILING PLAN REFERENCES LOCATION OF THE CARESTREAM CEILING MOUNTED EQUIPMENT NOT TO INTERFERE WITH LIGHTS, DIFFUSERS AND SPRINKLER HEADS.

TURN-KEY MEDICAL, INC.
945 S.W. 5TH AVE.
MERIDIAN, IDAHO 83642

REV/ AUTHORIZED BY | DATE | DOCUMENT NUMBER | REV 0.1
REV/ DRAFTED BY | DATE
REV/ RELEASE DATE | SIZE B ARCH

THIS DOCUMENT CONTAINS PROPRIETARY DATA OF TURN-KEY MEDICAL, INC. AND SHALL NOT BE USED FOR PURPOSES OTHER THAN THOSE AGREED UPON BETWEEN TURN-KEY MEDICAL AND ITS CUSTOMER. THIS DRAWING IS NOT TO BE USED FOR CONSTRUCTION PURPOSES.

STAR VALLEY ALPINE CLINIC
DR-FIT CM X-RAY ROOM PLAN
ALPINE, WYOMING

THESE DRAWINGS ARE FOR REVIEWING PURPOSES ONLY

DATE 8/19/2024 | SCALE 3/8"=1'-0" | DRAWN BY SKD | PURCHASE ORDER

PROJECT NO. FINAL

SHEET NO. S2

CRITICAL TO FUNCTION FOR ITEM 2

FLOOR UNDER TABLE BASE PLATE TO BE FLAT AND LEVEL WITH A TOTAL TOLERANCE OF 1/8"

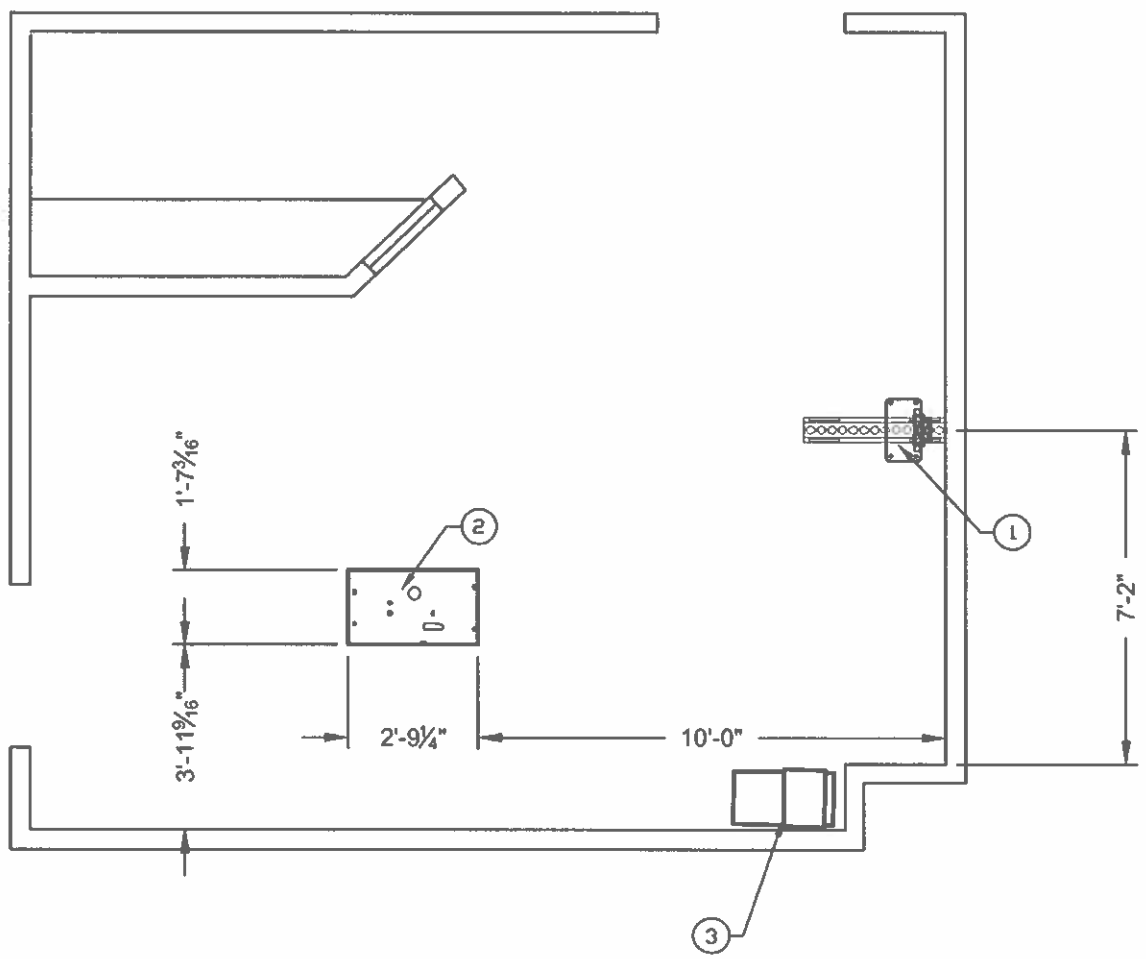

FLOOR PLAN
EQUIPMENT INSTALLED BY CSH

STRUCTURAL LEGEND

ITEM	COMPONENT DESCRIPTION: SUPPLIED AND INSTALLED BY CARESTREAM HEALTH INC.
1	WALL STAND BASE PLATE
2	TABLE BASE PLATE
3	GENERATOR AND PDU

GENERAL NOTES

1. FOR WALL STAND BASE PLATE AND TABLE BASE PLATE ANCHORS REFER TO EQUIPMENT SPECIFICATIONS AK0249.

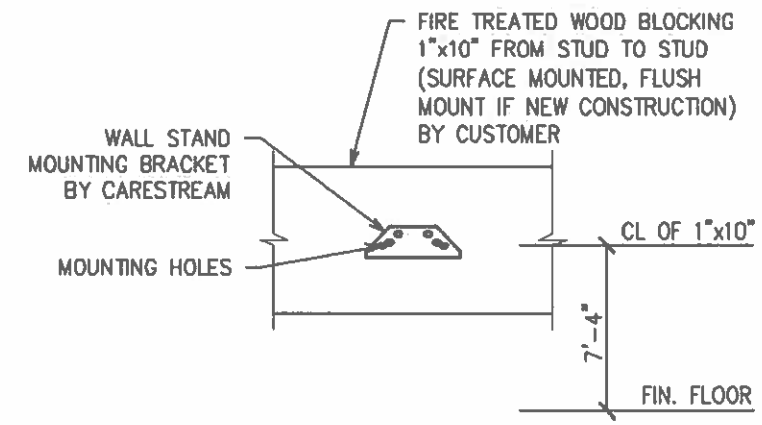

DETAIL-A
WALL STAND WOOD BLOCKING
NO SCALE

TURN-KEY MEDICAL, INC.
3655 W. 5TH AVE.
MERIDIAN, IDAHO 83642

REV AUTHORED BY	DATE	DOCUMENT NUMBER	REV
REV DRAFTED BY	DATE		0.1
REV RELEASE DATE		SIZE B ARCH	

THIS DOCUMENT CONTAINS PROPRIETARY DATA OF TURN-KEY MEDICAL, INC. AND SHALL NOT BE USED FOR PURPOSES OTHER THAN THOSE AGREED UPON BETWEEN TURN-KEY MEDICAL AND ITS CUSTOMER. THIS DRAWING IS NOT TO BE USED FOR CONSTRUCTION PURPOSES.

STAR VALLEY ALPINE CLINIC
DR-FIT CM X-RAY ROOM PLAN
ALPINE, WYOMING

THESE DRAWINGS ARE FOR REVIEWING PURPOSES ONLY

DATE	SCALE	DRAWN BY	PURCHASE ORDER
8/19/2024	3/8" = 1'-0"	SKD	

PROJECT NO
FINAL
SHEET NO
S3